

AIR PREPARATION SYSTEM P3X LITE SERIES

G1/2 & G3/4 Body ported

Tel: +45 63 12 83 00 | Email: ps@hymatik.com | www.hymatik.com | Hvidkaervej 27a, DK-5250 Odense SV, Denmark

WARNING — USER RESPONSIBILITY

FAILURE OR IMPROPER SELECTION OR IMPROPER USE OF THE PRODUCTS DESCRIBED HEREIN OR RELATED ITEMS CAN CAUSE DEATH, PERSONAL INJURY AND PROPERTY DAMAGE.

- This document and other information from Parker-Hannifin Corporation, its subsidiaries and authorized distributors provide product or system options for further investigation by users having technical expertise.
- The user, through its own analysis and testing, is solely responsible for making the final selection of the system and components and assuring that all performance, endurance, maintenance, safety and warning requirements of the application are met. The user must analyze all aspects of the application, follow applicable industry standards, and follow the information concerning the product in the current product catalog and in any other materials provided from Parker or its subsidiaries or authorized distributors.
- To the extent that Parker or its subsidiaries or authorized distributors provide component or system options based upon data or specifications provided by the user, the user is responsible for determining that such data and specifications are suitable and sufficient for all applications and reasonably foreseeable uses of the components or systems.

Offer of Sale

Please contact your Parker representation for a detailed "Offer of Sale".

Tabel of Contents

The System 4

New Technology 5

Nano Mist 5

Popular Combinations 6

Particulate Filters 7

Coalescing Filters 9

Adsorber Filters 11

Adsorber Oil Vapour Filters 11

Regulators 13

Filters/Regulators 15

Lubricators 17

Dump Valve & Combined Soft Start Dump 19

Modular Ball Valves 21

Slide Valves 21

Manifolds 21

Solenoid Coils 22

Accessories 23



If you have questions about the products contained in this catalog, or their applications, please contact:
Parker Hannifin EMEA Sàrl European Headquarters
parker.com/msge

THE SYSTEM

The P3X system allows units to be connected together, without the use of pipe connectors, saving space; providing constant mounting centres; whilst maintaining a modern aesthetically pleasing appearance.

The P3X Filters are specially designed to efficiently filter out rust, dirt, moisture and other impurities from compressed air lines. Operation is fully automatic with a minimum of pressure drop. Coalescing filters and adsorber filters for high purity air are also included in the P3X series.

The P3X Regulators are designed to provide quick response and accurate pressure regulation for the most demanding hi-flow industrial applications. The rolling diaphragm was designed for long trouble-free operation and will not rupture or tear under high cycle or other demanding applications.

The P3X mist lubricators are designed to provide lubrication for many general purpose applications in a pneumatic system.

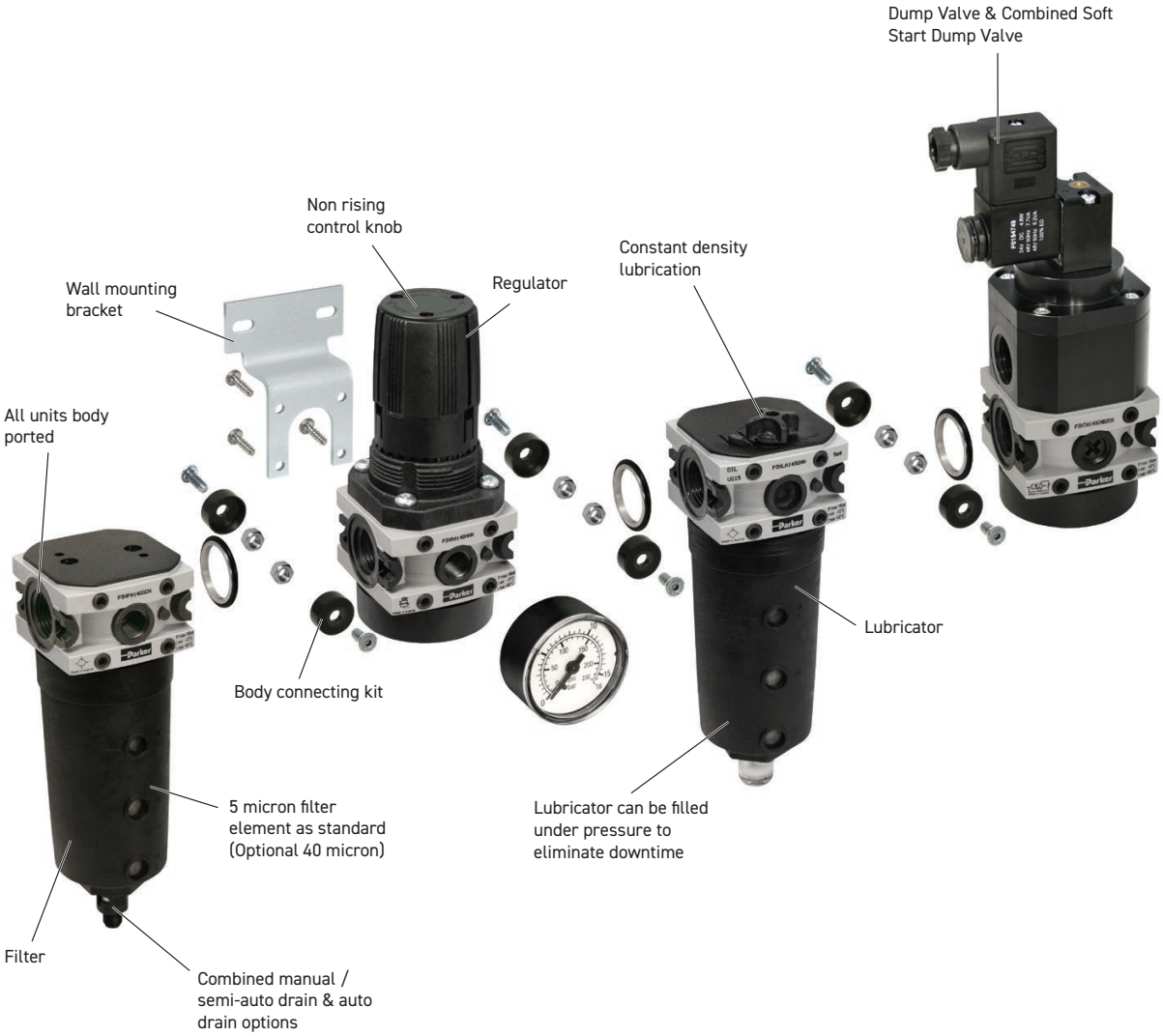

Tel: +45 63 12 83 00 | Email: ps@hymatik.com | www.hymatik.com | Hvidkaervej 27a, DK-5250 Odense SV, Denmark

NEW TECHNOLOGY

The P3X Lite FRL system is constructed from ultra light weight technopolymers instead of the traditional aluminium or zinc die cast, this means that is up to 45% lighter than conventional units. This non-metal construction also means that the P3X Lite is corrosion free enabling it to be used in harsh industrial environments where anti freeze or aggressive synthetic oils are present.

The use of technopolymers in the design of P3X Lite has facilitated a universal body design, this has resulted in reducing the number of variants required to cover the full spectrum of applications. This can dramatically lower logistic costs and simplify stock holding for customers making the P3X Lite a very cost effective solution.



NANO MIST

New Nano Mist Technology, New Lubricator Concept. Self-Adjusting.

With conventional lubricators, only the oil volume per time unit can be adjusted. If the demand changes, the quantity dispensed still remains constant.

The P3X Lite lubricator concept sets new benchmarks here. For the first time, the oil volume is automatically adjusted to the flow rate. This ensures that there is neither too little nor too much oil in the system, which leads to clear economic and ecological advantages. In addition, with conventional systems, the distance between the lubricator and the equipment has to be less than 8 meters. With larger distances, the dispensed oil is deposited as a wall flow.

The new lubricator principle of the P3X Lite allows for distances of up to 40 meters. This opens up new scope for the design of even more efficient production systems.

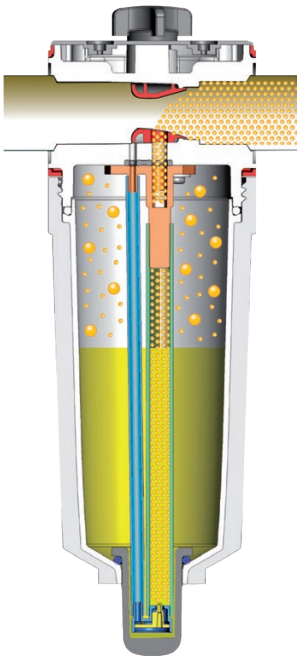

Tel: +45 63 12 83 00 | Email: ps@hymatik.com | www.hymatik.com | Hvidkaervej 27a, DK-5250 Odense SV, Denmark

POPULAR COMBINATIONS



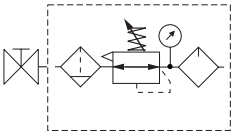

Slide Valve + Filter/Regulator + Lubricator Combinations (50mg/m³)
5 micron element, 8 bar Regulator + Gauge and Wall Mounting Brackets

Port Size	Combined Manual/Semi-Auto Drain	Flow dm³/s	Weight (g)	Auto Drain	Flow dm³/s	Weight (g)
G1/2	**P3XAA14GECNGPNW**	76	1300	**P3XAA14GEANGPNW**	76	1300
G3/4	**P3XAA16GECNGPNW**	77	1300	**P3XAA16GEANGPNW**	77	1300



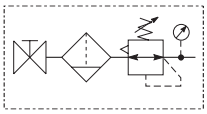

Slide Valve + Filter/Regulator Combinations
5 micron element, 8 bar Regulator + Gauge and Wall Mounting Brackets

Port Size	Combined Manual/Semi-Auto Drain	Flow dm³/s	Weight (g)	Auto Drain	Flow dm³/s	Weight (g)
G1/2	**P3XAN14GECNGW**	105	950	**P3XAN14GEANGW**	105	950
G3/4	**P3XAN16GECNGW**	106	950	**P3XAN16GEANGW**	106	950



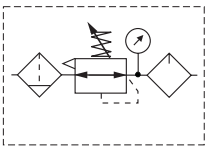

Filter/Regulator + Lubricator Combinations (50mg/m³)
5 micron element, 8 bar Regulator + Gauge and Wall Mounting Brackets

Port Size	Combined Manual/Semi-Auto Drain	Flow dm³/s	Weight (g)	Auto Drain	Flow dm³/s	Weight (g)
G1/2	**P3XCA14GECNGPNW**	76	1000	**P3XAA14GEANGPNW**	76	1000
G3/4	**P3XCA16GECNGPNW**	77	1000	**P3XAA16GEANGPNW**	77	1000

Options

P3X [ ] **1** [ ] **GE** [ ] [ ] [ ] **PN** **W**

Filter/Reg + Lubricator	**CA**
Slide valve + Filter/Reg	**AN**
Slide valve + Filter/Reg + Lubricator	**AA**

BSPP (G)	**1**
NPT *	

Combined Manual/Semi Auto Drain	**C**
Auto Drain	**A**

0 - 8 bar with gauge	**G**
0 - 16 bar with gauge	**J**

1/2	**4**
3/4	**6**

Non rise - Standard	**N**
Tamperproof - Lockable	**A**

(50mg/m³)	**PN**	Add only for options with lubricator

* 1/2" NPT see Accessories

Tel: +45 63 12 83 00 | Email: ps@hymatik.com | www.hymatik.com | Hvidkaervej 27a, DK-5250 Odense SV, Denmark

PARTICULATE FILTERS

- Integral 1/2 or 3/4" ports
- 2 stage filtration
- High efficiency 5µ particulate element as standard
- Excellent water removal efficiency
- Low temperature -40°C with combined manual/semi - auto drain as standard



Symbols

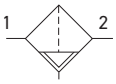

Manual / Semi auto drain

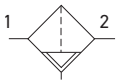

Auto drain

Options

P3XFA	1			G		N

BSPP (G)	1
NPT *	

1/2	4
3/4	6

* 1/2" NPT see Accessories

5 Micron Element Standard	E
40 Micron Element Optional	G
1 Micron Dust Filter	2

Combined Manual/Semi Auto Drain	C
Auto Drain	A

Port size	Description	Order code	Flow dm^3/s *	Max bar	Min temp °C	Max temp °C	Bowl capacity cm^3	Height mm	Width mm	Depth mm	Weight (g)
1/2	Combined manual/ semi auto drain	**P3XFA14EGCN**	55	16	-40	60	60	192	62	62	320
1/2	Auto drain	**P3XFA14EGAN**	55	16	-10	60	60	192	62	62	320
3/4	Combined manual/ semi auto drain	**P3XFA16EGCN**	57	16	-40	60	60	192	62	62	320
3/4	Auto drain	**P3XFA16EGAN**	57	16	-10	60	60	192	62	62	320

* flow with 6,3 bar inlet pressure and 0,5 pressure drop.

Tel: +45 63 12 83 00 | Email: ps@hymatik.com | www.hymatik.com | Hvidkaervej 27a, DK-5250 Odense SV, Denmark

Technical Information	
Fluid:	Compressed air
Maximum inlet pressure:	16 bar
Temperature range*: Auto drain: Combined drain:	 -10 to +60°C -40 to +60°C
Particle removal:	1, 5 & 40 micron
Typical flow with 5µm element 6,3 bar inlet pressure and 0.5 bar pressure drop:	1/2" 55 dm^3/s
Semi-auto drain: bowl pressure to close drain	0.8 bar
Auto drain: bowl pressure to close drain Operating range manual override facility	0.8 bar 0.8 to 16 bar
Bowl sump capacity:	60 cm^3

* Air supply must be dry enough to avoid ice formation at temperatures below +2°C

Material Specification		
Body:		High tech polymer
Sight glass:		Polypropylene
Body cover:		ABS
Element:		Sintered P.E.
Seals:		Nitrile NBR
Drains:	Manual / Semi-auto:	Acetal
	Automatic:	PA / Brass

Dimensions (mm)

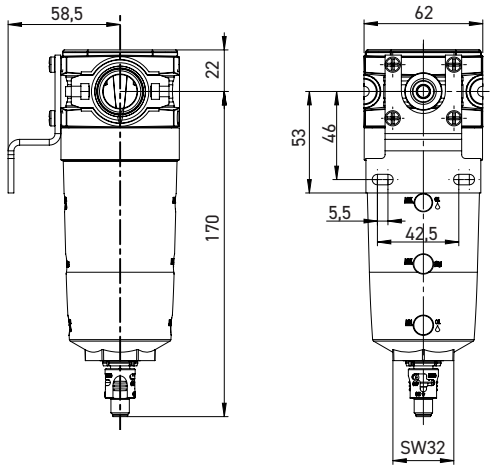

Flow characteristics

(1/2) 5 Micron Filter

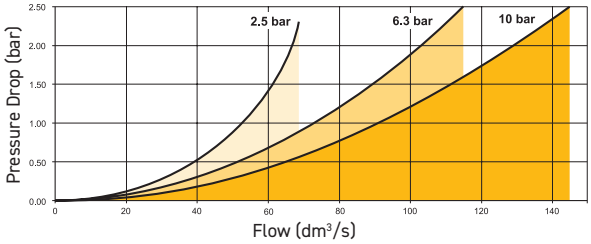

(3/4) 5 Micron Filter

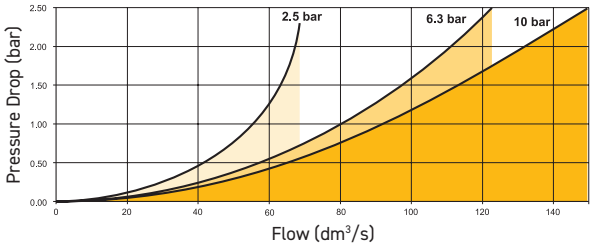

Service kits

Description	Order code
5 micron element kit	**P3XKA00ESE**
40 micron element kit	**P3XKA00ESG**
Bowl kit with combines manual/semi auto drain	**P3XKA00BSC**
Bowl kit with auto drain	**P3XKA00BSA**
1 micron element kit	**P3XKA00ES9**

Tel: +45 63 12 83 00 | Email: ps@hymatik.com | www.hymatik.com | Hvidkaervej 27a, DK-5250 Odense SV, Denmark

COALESCING FILTERS

- Integral 1/2 or 3/4 ports
- Removes liquid aerosols and sub micron particles
- Oil free air for critical applications, such as air gauging, pneumatic instrumentation and control



Note:

To optimise the life of the coalescing element, it is advisable to install a P3XFA pre-filter with a 5 or 1 micron element upstream of the coalescing filter.

Options

P3XFA	1		D	G		N

BSPP (G)	1	1/2	4
NPT *		3/4	6

* 1/2" NPT see Accessories

0.01 µm element with DPI	D

Combined Manual/Semi Auto Drain	C
Auto Drain	A

Port size	Description	Order code	Flow dm^3/s *	Max bar	Min temp °C	Max temp °C	Bowl capacity cm^3	Height mm	Width mm	Depth mm	Weight (g)
1/2	Coalescing Filter 0.01µm, Combined manual/semi auto drain	**P3XFA14DGCN**	24	16	-10	60	60	217	62	62	320
1/2	Coalescing Filter 0.01µm, auto drain	**P3XFA14DGAN**	24	16	-10	60	60	217	62	62	320
3/4	Coalescing Filter 0.01µm, Combined manual/semi auto drain	**P3XFA16DGCN**	24	16	-10	60	60	217	62	62	320
3/4	Coalescing Filter 0.01µm, auto drain	**P3XFA16DGAN**	24	16	-10	60	60	217	62	62	320

* flow with 6,3 bar inlet pressure and 0,5 pressure drop.

Tel: +45 63 12 83 00 | Email: ps@hymatik.com | www.hymatik.com | Hvidkaervej 27a, DK-5250 Odense SV, Denmark

Technical Information	
Fluid:	Compressed air
Maximum inlet pressure:	16 bar
Temperature range*:	-10 to +60°C
Media specifications: Coalescing efficiency Max. oil carryover (PPM w/w):	(0.3 to 0.6 micron particles): 99.97% 0.008 mg/m³
Typical flow with 5µm element 6,3 bar inlet pressure and 0.5 bar pressure drop:	16 dm³/s
Semi-auto drain: bowl pressure to close drain	0.8 bar
Auto drain: bowl pressure to close drain Operating range manual override facility	0.8 bar 0.8 to 16 bar
Bowl sump capacity:	60 cm³

* Air supply must be dry enough to avoid ice formation at temperatures below +2°C

Material Specification		
Body:		High tech polymer
Sight glass:		Polypropylene
Filter cover:		ABS
Coalescing element:		Borosilicate & Nano fibres
Top & bottom end cap:		Glass filled nylon - Black
Support cylinders:		Grade 430 stainless steel
Support media:		Polypropylene
Anti re-entrainment barrier:		Polyester
Ensapulate:		Epoxy resin / Hardener
Seals:		Nitrile NBR
Drains:	Manual / Semi-auto:	Acetal
	Automatic:	PA / Brass
Differential pressure indicator materials:		
Body:		Acetal
Internal parts:		Acetal
Spring:		Stainless steel
Seals:		Nitrile NBR
Screws:		Steel / zinc plated

Dimensions (mm)

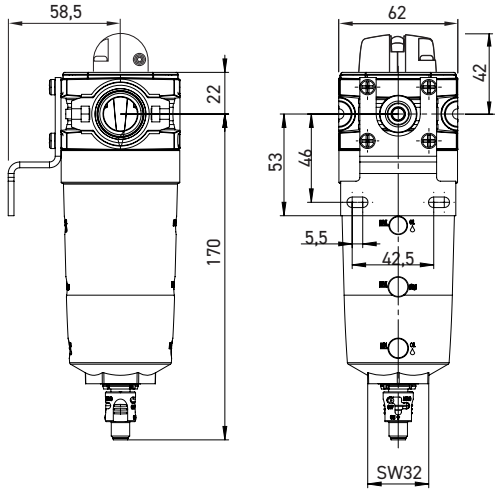

Flow characteristics

(1/2) 0.01µm Coalescing Filter Saturated

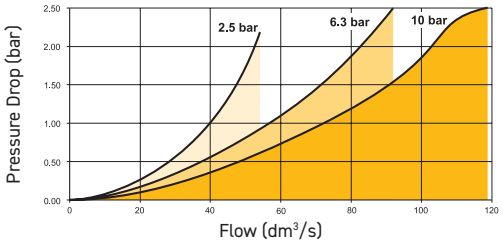

(3/4) 0.01µm Coalescing Filter Saturated

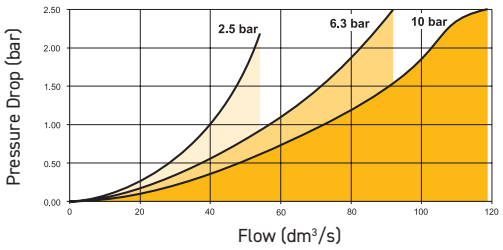

Service kits

Description	Order code
0.01 micron coalescing element kit	**P3XKA00ESC**
Bowl kit with combines manual/semi auto drain	**P3XKA00BSC**
Bowl kit with auto drain	**P3XKA00BSA**
Differential pressure indicator kit	**P3XKA00RQ**

Tel: +45 63 12 83 00 | Email: ps@hymatik.com | www.hymatik.com | Hvidkaervej 27a, DK-5250 Odense SV, Denmark

ADSORBER FILTERS

Adsorber Oil Vapour Filters

- Integral 1/2 or 3/4 ports
- Adsorber activated carbon element removes oil vapours and most hydrocarbons



Note:

To optimise the life of the adsorber element, it is advisable to install a P3X pre filter 1 or 5 micron and a coalescer 0.01 µm filter upstream of the adsorber filter.

Options

P3XFA	1		A	G	C	N

1			
BSPP (G)	1	1/2	4
NPT *		3/4	6

A	
Adsorber element	A

G	C
Combined Manual/Semi Auto Drain	C

* 1/2" NPT see Accessories

Port size	Description	Order code	Flow dm^3/s *	Max bar	Min temp °C	Max temp °C	Bowl capacity cm^3	Height mm	Width mm	Depth mm	Weight (g)
1/2	Adsorber Filter, Manual/Semi-auto drain	**P3XFA14AGCN**	18	16	-10	60	60	192	62	62	320
3/4	Adsorber Filter, Manual/Semi-auto drain	**P3XFA16AGCN**	18	16	-10	60	60	192	62	62	320

* flow with 6,3 bar inlet pressure and 0,5 pressure drop.

Tel: +45 63 12 83 00 | Email: ps@hymatik.com | www.hymatik.com | Hvidkaervej 27a, DK-5250 Odense SV, Denmark

Technical Information	
Fluid:	Compressed air
Maximum inlet pressure:	16 bar
Temperature range*:	-10 to +60°C
Typical flow at 6,3 bar inlet pressure and 0.2 bar pressure drop:	Adsorber 18 dm^3/s
Manual / Semi-auto drain: to close connection	1/8" connection 0.8 bar

* Air supply must be dry enough to avoid ice formation at temperatures below +2°C

Material Specification	
Body:	High tech polymer
Sight glass:	Polypropylene
Filter cover:	ABS
Adsorber element:	Activated carbon
Top & bottom endcap:	Glass filled nylon
Support cylinders:	Grade 430 stainless steel
Support media:	100% spun polypropylene
Support sock:	Polyester needlefelt
Encapsulant:	Epoxy resin / Hardener
Seals:	Nitrile NBR
Drain: Manual / Semi-auto	Acetal

Dimensions (mm)

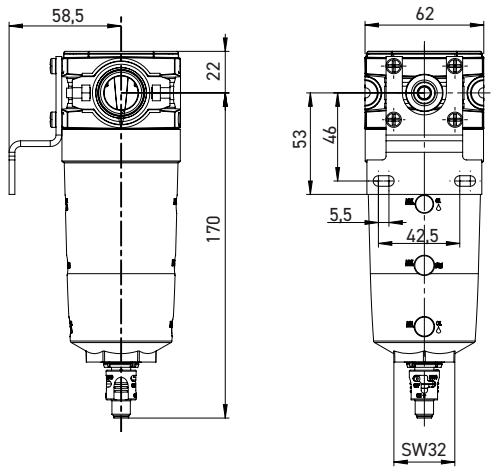

Flow characteristics

(1/2) Adsorber Filter

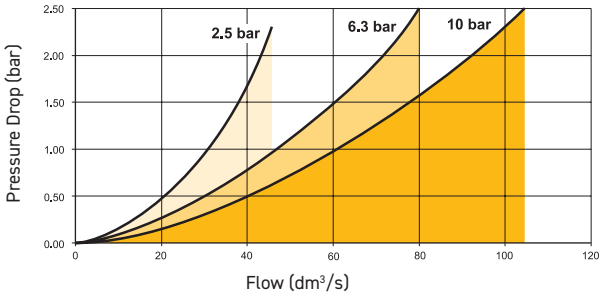

(3/4) Adsorber Filter

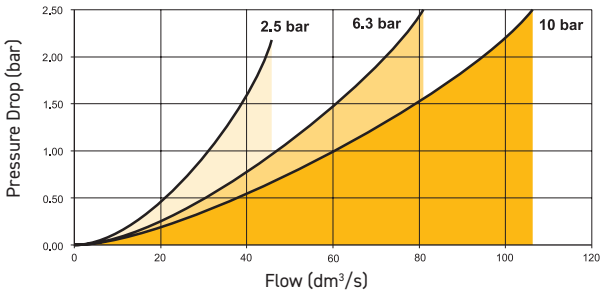

Service kits

Description	Order code
Adsorber element kit	**P3XKA00ESA**
Bowl kit with manual drain	**P3XKA00BSC**

Tel: +45 63 12 83 00 | Email: ps@hymatik.com | www.hymatik.com | Hvidkaervej 27a, DK-5250 Odense SV, Denmark

REGULATORS

- Integral 1/2 or 3/4 ports
- Secondary pressure ranges 8 & 16 bar
- Rolling diaphragm for extended life
- Secondary aspiration plus rolling diaphragm provides quick response and accurate pressure regulation.
- Optional tamperproof regulator, up to x 3 padlocks
- Relieving & Non-relieving types
- Low temperature -40°C as standard



Symbols

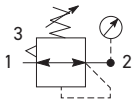

Self relieving regulator with gauge

Options

P3XRA	1		B			N
	BSPP (G) 1 NPT *	1/2 4 3/4 6	Relieving B	Non rise - standard N Tamperproof - Lockable A	0 - 4 bar Gauge M 0 - 8 bar Gauge G 0 - 16 bar Gauge J	

* 1/2" NPT see Accessories

Port size	Description	Order code	Flow dm^3/s *	Max bar	Min temp °C	Max temp °C	Height mm	Width mm	Depth mm	Weight (g)
1/2	8 bar relieving + pressure gauge	**P3XRA14BNGN**	122	16	-10	60	150	62	95	410
3/4	8 bar relieving + pressure gauge	**P3XRA16BNGN**	134	16	-10	60	150	62	95	410
1/2	8 bar relieving with tamperproof facility + pressure gauge	**P3XRA14BAGN**	122	16	-10	60	158	62	95	410
3/4	8 bar relieving with tamperproof facility + pressure gauge	**P3XRA16BAGN**	134	16	-10	60	158	62	95	410

* flow with 6,3 bar inlet pressure and 0,5 pressure drop.
Tamperproof regulator will require lock kit (on opposite page) to lock regulator.

Tel: +45 63 12 83 00 | Email: ps@hymatik.com | www.hymatik.com | Hvidkaervej 27a, DK-5250 Odense SV, Denmark

Technical Information	
Fluid:	Compressed air
Maximum inlet pressure:	16 bar
Temperature range*:	-10 to +60°C
Typical flow with 10 bar inlet pressure, 6.3 bar set pressure and 1 bar pressure drop:	1/2" 122 dm³/s 3/4" 134 dm³/s
Gauge port (x 2):	1/4"

* Air supply must be dry enough to avoid ice formation at temperatures below +2°C

Material Specification	
Body:	High tech polymer
Bonnet:	High tech polymer
Regulator cover:	ABS
Control Knob:	Polyamide
Valve:	Brass / Nitrile
Seals:	Nitrile NBR
Screws:	Stainless steel

Lockable Tamperproof Kit

(up to x 3 padlocks)

This facilitates the tamperproofing of the Regulator and Filter-Regulator units. (On request)



Description	Order code
1 Padlock each	**P3XKA00AS**

Dimensions (mm)

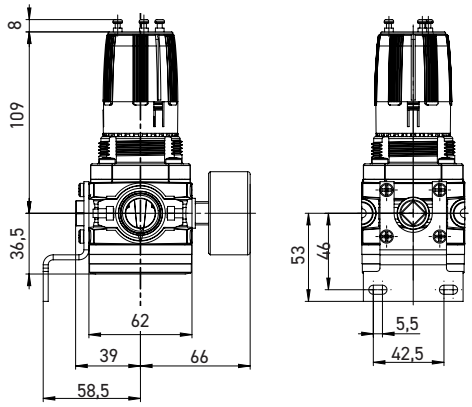

Flow characteristics

Regulation characteristics: (1/2)

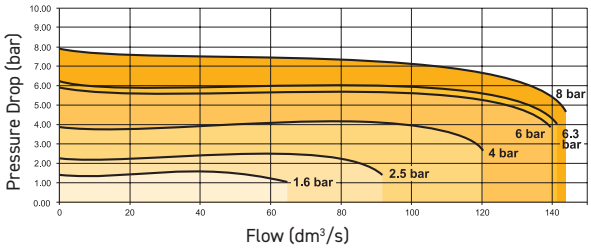

Regulation characteristics: (3/4)

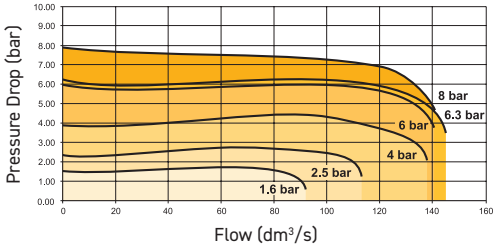

Service kits

Description		Order code
Wall bracket - Stainless steel		**P3XKA00MW**
Panel mounting nut		**P3XKA00MM**
Key lock		**P3XKA00AS**
Diaphragm kit (relieving type)		**P3XKA00RR**
Diaphragm kit (non-relieving type)		**P3XKA00RN**
Pressure Gauge	0 to 10 bar G1/4"	**KG8012-00**
	0 to 16 bar G1/4"	**KG8013-00**

Tel: +45 63 12 83 00 | Email: ps@hymatik.com | www.hymatik.com | Hvidkaervej 27a, DK-5250 Odense SV, Denmark

FILTERS/REGULATORS

- Integral 1/2 or 3/4 ports
- High efficiency 5 micron element as standard
- Excellent water removal efficiency
- Secondary pressure ranges 8 and 16 bar
- Rolling diaphragm for extended life
- Secondary aspiration plus balanced poppet provides quick response and accurate pressure regulation.
- Low temperature -40°C with combined manual/ semi - auto drain as standard



Symbols

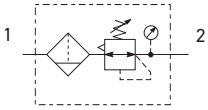

Self relieving regulator with gauge

Options

P3XEA	1			G		B			N

BSPP (G)	1
NPT *	

* 1/2" NPT see Accessories

1/2	4
3/4	6

5 Micron Element Standard	E
40 Micron Element Option	G

Combined Manual/Semi Auto Drain	C
Auto Drain	A

0 - 4 bar Gauge	M
0 - 8 bar Gauge	G
0 - 16 bar Gauge	J

Relieving	B

Non rise - Standard	N
Tamperproof - Lockable*	A

* Tamperproof regulator will require lock kit (see Accessories) to lock regulator.

Port size	Description	Order code	Flow dm^3/s *	Max bar	Min temp °C	Max temp °C	Bowl capacity cm^3	Height mm	Width mm	Depth mm	Weight (g)
1/2	8 bar, relieving, gauge Combined manual/semi auto drain	**P3XEA14EGCBNGN**	111	16	-10	60	60	280	62	62	550
1/2	8 bar relieving, gauge, auto drain	**P3XEA14EGABNGN**	111	16	-10	60	60	280	62	62	550
3/4	8 bar, relieving, gauge Combined manual/semi auto drain	**P3XEA16EGCBNGN**	113	16	-10	60	60	280	62	62	550
3/4	8 bar relieving, gauge, auto drain	**P3XEA16EGABNGN**	113	16	-10	60	60	280	62	62	550

* flow with 6,3 bar inlet pressure and 0,5 pressure drop.

Tel: +45 63 12 83 00 | Email: ps@hymatik.com | www.hymatik.com | Hvidkaervej 27a, DK-5250 Odense SV, Denmark

Technical Information	
Fluid:	Compressed air
Maximum inlet pressure:	16 bar
Temperature range*: Auto drain: Combined drain:	 -10° to +60°C -40° to +60°C
Particle removal:	5 micron and 40 micron
Typical flow with 10 bar inlet pressure 6,3 bar set pressure and 1 bar pressure drop 106 dm^3/s	
Manual / Semi-auto drain: pressure to close drain	0.8 bar
Auto drain: bowl pressure to close drain Operating range manual override facility	0.8 bar 0.8 to 16 bar
Bowl sump capacity:	60 cm^3
Gauge ports (x 2):	1/4"

* Air supply must be dry enough to avoid ice formation at temperatures below +2°C

Material Specification		
Body:		High tech polymer
Sight glass:		Polypropylene
Body cover:		ABS
Element:		Sintered P.E.
Seals:		Nitrile NBR
Drains:	Manual / Semi-auto:	Acetal
	Automatic:	PA / Brass
Differential pressure indicator materials:		
Bonnet:		High tech polymer
Control knob:		Polyamide
Valve:		Brass / Nitrile
Screws:		Stainless steel

Dimensions (mm)

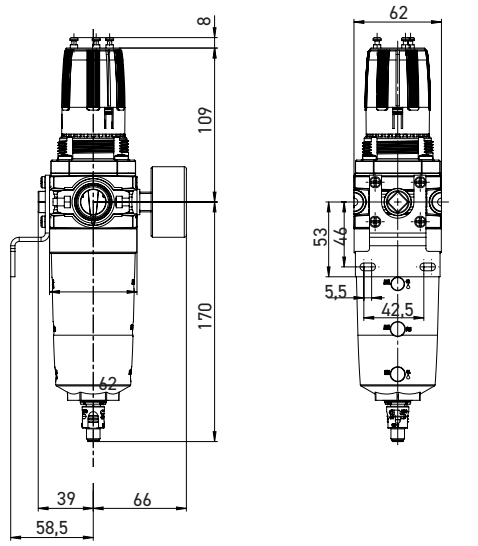

Flow characteristics

(1/2) 5 Micron Filter/Regulator

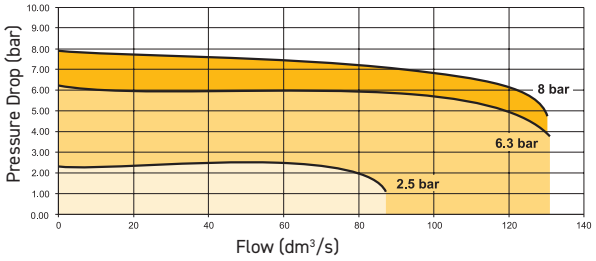

(3/4) 5 Micron Filter/Regulator

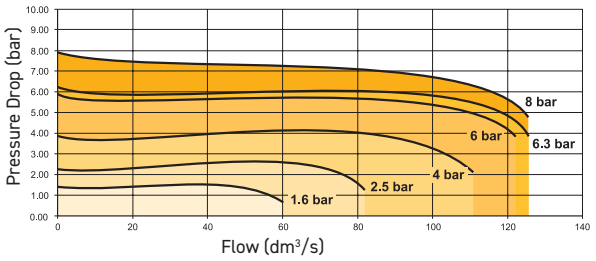

Service kits

Description		Order code
5 micron element kit		**P3XKA00ESE**
40 micron element kit		**P3XKA00ESG**
Bowl kit with combined manual/semi auto drain		**P3XKA00BSC**
Bowl kit with auto drain		**P3XKA00BSA**
Tamper-proof knob kit (keylock)		**P3XKA00AS**
Diaphragm kit (relieving type)		**P3XKA00RR**
Diaphragm kit (non-relieving type)		**P3XKA00RN**
Wall bracket kit - Stainless steel		**P3XKA00MW**
Panel mount nut		**P3XKA00MM**
Pressure Gauge	0 to 10 bar G1/4" 0 to 16 bar G1/4"	**KG8012-00** **KG8013-00**
Key Lock		**P3XKA00AS**

Tel: +45 63 12 83 00 | Email: ps@hymatik.com | www.hymatik.com | Hvidkaervej 27a, DK-5250 Odense SV, Denmark

LUBRICATORS

- Integral 1/2 or 3/4 ports
- Proportional oil delivery over a wide range of air flows.
- No adjustment necessary (self adjusting)
- Fill from top under system pressure



Symbols

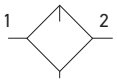

Lubricator

Options

P3XLA	1		P	GNN

BSPP (G)	1	1/2	4
NPT *		3/4	6

50 mg/m³	P [1]

* 1/2" NPT see Accessories

Port size	Description	Order code	Flow dm³/s *	Max bar	Min temp °C	Max temp °C	Bowl capacity cm³	Height mm	Width mm	Depth mm	Weight (g)
1/2	Oil mist, fill under pressure (50mg/m³)	**P3XLA14PGNN**	78	16	-10	60	90	195	62	62	300
3/4	Oil mist, fill under pressure (50mg/m³)	**P3XLA16PGNN**	78	16	-10	60	90	195	62	62	300

* flow with 6,3 bar inlet pressure and 0,5 pressure drop.

[1] Best for components which require effective lubrication (e.g. vane driven pneumatic motors / air tools etc.)

Tel: +45 63 12 83 00 | Email: ps@hymatik.com | www.hymatik.com | Hvidkaervej 27a, DK-5250 Odense SV, Denmark

Technical Information	
Fluid:	Compressed air
Maximum inlet pressure:	16 bar
Temperature range*:	-10 to +60°C

* Air supply must be dry enough to avoid ice formation at temperatures below +2°C
Low flow start point (lubrication pick-up): at 6.3bar inlet pressure 7 dm^3/s
Typical flow with 6.3bar inlet pressure and 0.5 bar pressure drop: 78 dm^3/s

Material Specification	
Body:	High tech polymer
Bowl sight glass:	Polypropylene
Sight dome:	PA (Nylon)
Lubricator cover:	ABS
Seals:	Nitrile NBR

Note:

Fill lubricant from top only
Recommandation to use VG15 oil following ISO3448

Dimensions (mm)

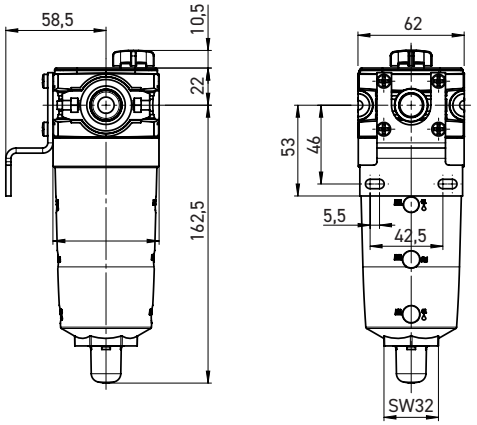

Flow characteristics

(1/2) Lubricator

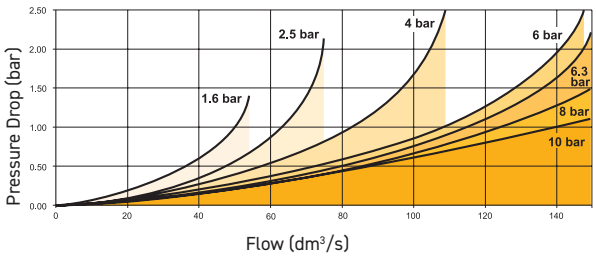

(3/4) Lubricator

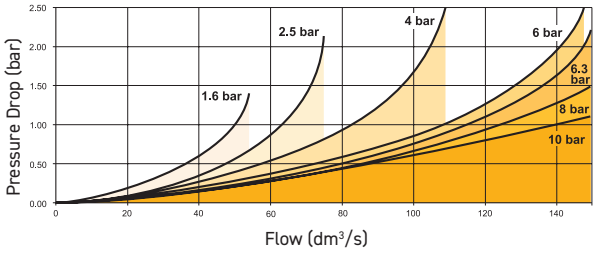

Service kits

Description	Order code
Bowl kit	**P3XKA00BSN**
Refill plug	**P3XKA00PL**

Tel: +45 63 12 83 00 | Email: ps@hymatik.com | www.hymatik.com | Hvidkaervej 27a, DK-5250 Odense SV, Denmark

DUMP VALVE & COMBINED SOFT START DUMP

- Modular design with 1/2" & 3/4" integral ports (BSPP or NPT)
- Provides for the safe introduction of pressure
- Automatically dumps downstream pressure on the loss of pilot signal
- Adjustable slow start
- Solenoid or air pilot options
- High flow & exhaust capability



Symbols

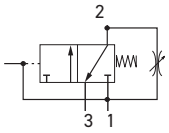

P3X Series Combined Soft Start/Dump Valves, provide for the safe introduction of pressure to machines or systems. Soft Start/Dump Valves when set, allow the pressure to gradually build to the set point before fully opening to deliver full flow at line pressure.

The controlled introduction of pressure can be an important safety factor and prevent damage to tooling when air pressure is introduced at machine or system start up.

Options

Solenoid type only

P3X		A	1		S	C	N				

Combined soft start dump valve	T
Dump valve	D

Solenoid pilot	S

None (operator is fitted to valve)	0
30 mm CNOMO coil (Form connection)	A
22 mm coil (Form connection)	B

Solenoid / coil not fitted	000
24V DC	2CN

BSPP (G)	1
NPT *	

1/2	4
3/4	6

30 mm operator	C

* 1/2" NPT see Accessories

Port size	Description	Order code	Flow dm^3/s *	Max bar	Min temp °C	Max temp °C	Height mm	Width mm	Depth mm	Weight (g)
1/2	Solenoid operated (not included)	**P3XTA14SCN0000**	80	16	-10	60	144	62	62	0.75
1/2	24VDC 22mm coil	**P3XTA14SCNB2CN**	80	10	-10	60	174	88	62	0.75
1/2	24VDC 30mm coil	**P3XTA14SCNA2CN**	80	16	-10	60	174	88	62	0.75
3/4	Solenoid operated (not included)	**P3XTA16SCN0000**	88	16	-10	60	144	62	62	0.75
3/4	24VDC 22mm coil	**P3XTA16SCNB2CN**	88	10	-10	60	174	88	62	0.75
3/4	24VDC 30mm coil	**P3XTA16SCNA2CN**	88	16	-10	60	174	88	62	0.75

Tel: +45 63 12 83 00 | Email: ps@hymatik.com | www.hymatik.com | Hvidkaervej 27a, DK-5250 Odense SV, Denmark

Technical Information	
Fluid:	Compressed air
Maximum pressure Solenoid operated 22 mm coil:	10 bar
Maximum pressure Solenoid operated 30 mm coil:	16 bar
Minimum operating pressure:	2 bar
Temperature range* Solenoid operated:	-10° to + 60°C
Temperature range* Air Pilot operated:	-10° to + 60°C
Air Pilot port:	1/8 BSP
Exhaust port:	1/2 BSP
Gauge port:	1/4 BSP
Typical flow with 6.3 bar inlet pressure and 1 bar pressure drop:	1/2" 80 dm^3/s 3/4" 80 dm^3/s

* Air supply must be dry enough to avoid ice formation at temperatures below +2°C

Snap pressure: Full flow when downstream pressure reaches 50% of the inlet pressure

Material Specification	
Body:	Aluminium
Body cover:	ABS
Valve:	Brass / NBR composite
Pilot valve booster:	Aluminium
Seals:	Nitrile NBR

Solenoid coils

For Solenoid coil information refer to Solenoid Coils section.

Dimensions (mm)

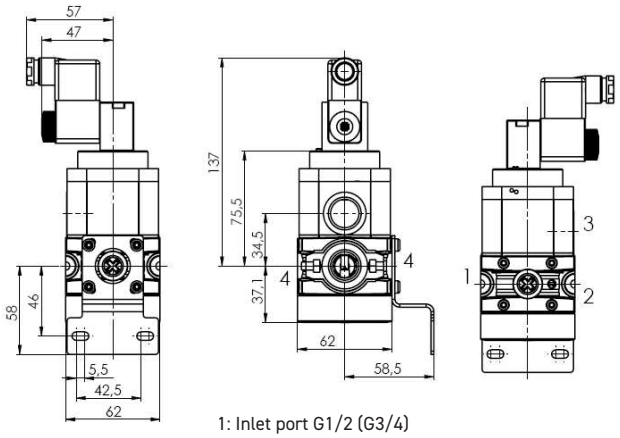

1: Inlet port G1/2 (G3/4)

2: Outlet port G1/2 (G3/4)

3: Exhaust port G1/2

4: Gauge port G1/4

Flow characteristics

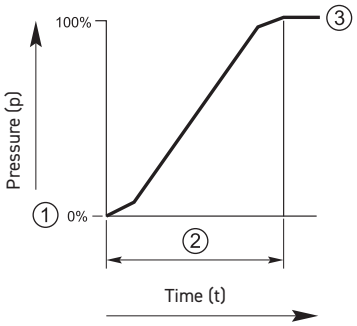

① Start signal

② Switching time delay

③ Operating pressure p^2 (=p^1)

Soft Start Dump Valve 24v 1/2" Port

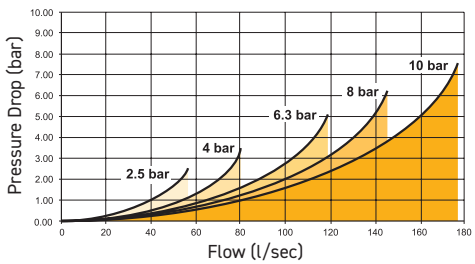

Tel: +45 63 12 83 00 | Email: ps@hymatik.com | www.hymatik.com | Hvidkaervej 27a, DK-5250 Odense SV, Denmark

MODULAR BALL VALVES

Slide Valves

- Padlockable
- When the inlet pressure is turned off the downstream vents through the exhaust port

P3X Series Slide Valves provide shut off line pressure to prevent unauthorised adjustment.



Symbols

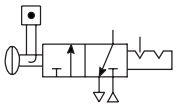

Options

P3X	VA	1		LSN

BSPP (G)	1	1/2	4
NPT *		3/4	6

* 1/2" NPT see Accessories

Dimensions (mm)

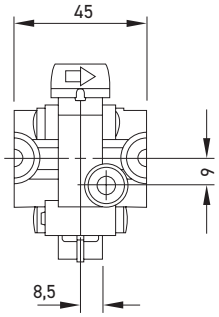

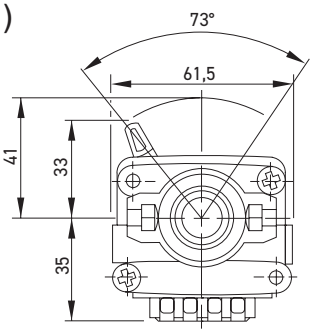

Technical Information		
Operating Temperature:		-10° to +60°C
Maximum Supply Pressure:		16 bar
Weight (g):	G1/2"	300 g
	G3/4"	300 g

Material specification	
Body:	High tech polymer
Handle:	Polyamide
Seals:	Nitrile NBR
Exhaust muffler:	Sintered bronze

Manifolds



P3X Series Manifolds, provide up to 2 extra outlet ports, they may be assembled at any position in a combination e.g. before the lubricator to provide oil free take off or at the end of a combination to provide extra outlet ports.

Description	Order code BSPP	Weight (g)
G1/2	**P3XMA1V0N**	170

Material specification	
Body:	High tech polymer
Manifold Cover:	ABS

Dimensions (mm)

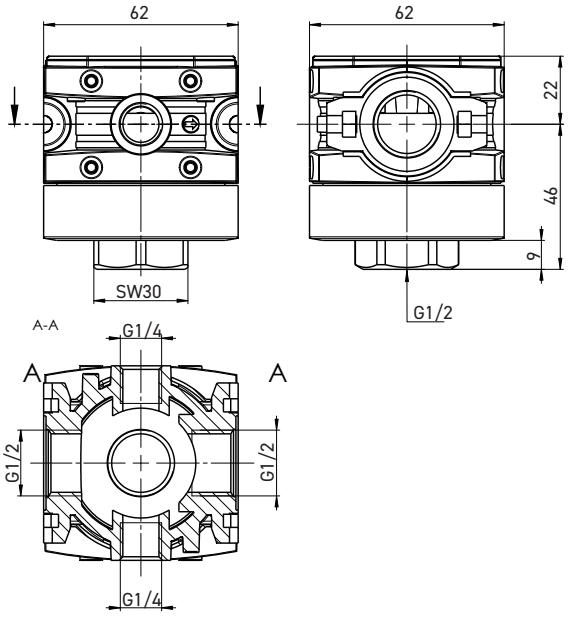

Inlet port	Bottom	Front and Back
1/2	1/2"	1/4"

Tel: +45 63 12 83 00 | Email: ps@hymatik.com | www.hymatik.com | Hvidkaervej 27a, DK-5250 Odense SV, Denmark

SOLENOID COILS

Solenoid coils with Din A or Industrial B connection

Voltage	30 mm x 30 mm Order code DIN A Standard	Weight (Kg)	22 mm x 30 mm Order code Industrial B standard	Weight (Kg)
Direct current				
12V DC	**P2FCA445**	0.105	**P2FCB445**	0.093
24V DC	**P2FCA449**	0.105	**P2FCB449**	0.093
48V DC	**P2FCA453***	0.105	**P2FCB451**	0.093
Alternative current				
12V 50/60Hz	**P2FCA440**	0.105	**P2FCB440**	0.093
24V 50/60Hz	**P2FCA442**	0.105	**P2FCB442**	0.093
48V 50/60Hz	**P2FCA469#**	0.105		
110V 50Hz, 120V 60Hz	**P2FCA453**	0.105	**P2FCB453**	0.093
230V 50Hz, 230V 60Hz	**P2FCA457**	0.105	**P2FCB457**	0.093

* P2FCA453 is compatible with 110 V AC and 48 V DC

\# P2FCA469 is 24 V DC 6.8W or 48 V 50Hz 9.9 VA

Solenoid coils with M12 connection

Voltage	Order code Form A 30 x 30	Weight (Kg)	Order code Form B 22 x 30	Weight (Kg)
Direct current				
24V DC	**P2FC6419**	0.065	**P2FC7419**	0.065

Tel: +45 63 12 83 00 | Email: ps@hymatik.com | www.hymatik.com | Hvidkaervej 27a, DK-5250 Odense SV, Denmark

ACCESSORIES

Description		Connection	Weight (g)	Order code	
Panel mounting nut			10	**P3XKA00MM**	
Stainless steel - Wall bracket kit			80	**P3XKA00MW**	
P3X connecting kit			10	**P3XKA00CB**	
Pressure gauge	0 to 10 bar 0 to 16 bar	1/4” 1/4”	60 60	**KG8012-00** **KG8013-00**	
Connector O-ring kit	Qty: 5			**P3XKA04CY**	
Regulator & Filter/Regulator - Key Lock Kit			0.05	**P3XKA00AS**	
Kit to convert 3/4” BSP to 1/2” NPT air ports (2 O-Rings with 2 Adaptors). Body width 72 mm instead of 70 mm				**P3XKA00CA**	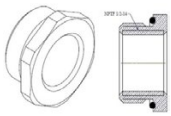

Tel: +45 63 12 83 00 | Email: ps@hymatik.com | www.hymatik.com | Hvidkaervej 27a, DK-5250 Odense SV, Denmark

Parker Hannifin Corporation
Parker Hannifin EMEA Sàrl
European Headquarters
La Tuilière 6 Etoy
Switzerland CH-1163
www.parker.com

PDE2620TCUK 08/2025

Your Local Authorized Parker Distributor

© 2025 Parker Hannifin Corporation