







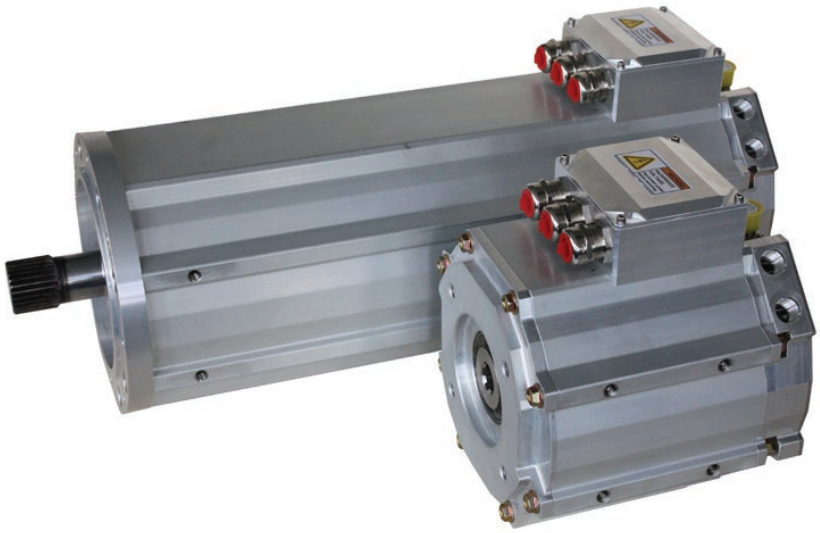

GVM Global Vehicle Motor

Permanent Magnet (PMAC) Motors and Generators for Traction, Electro-Hydraulic Pumps (EHP) and Auxiliary Systems



Parker

ENGINEERING YOUR SUCCESS.

Tel: +45 63 12 83 00 | Email: ps@hymatik.com | www.hymatik.com | Hvidkaervej 27a, DK-5250 Odense SV, Denmark

WARNING — USER RESPONSIBILITY

FAILURE OR IMPROPER SELECTION OR IMPROPER USE OF THE PRODUCTS DESCRIBED HEREIN OR RELATED ITEMS CAN CAUSE DEATH, PERSONAL INJURY AND PROPERTY DAMAGE.

- This document and other information from Parker-Hannifin Corporation, its subsidiaries and authorized distributors provide product or system options for further investigation by users having technical expertise.
- The user, through its own analysis and testing, is solely responsible for making the final selection of the system and components and assuring that all performance, endurance, maintenance, safety and warning requirements of the application are met. The user must analyze all aspects of the application, follow applicable industry standards, and follow the information concerning the product in the current product catalog and in any other materials provided from Parker or its subsidiaries or authorized distributors.
- To the extent that Parker or its subsidiaries or authorized distributors provide component or system options based upon data or specifications provided by the user, the user is responsible for determining that such data and specifications are suitable and sufficient for all applications and reasonably foreseeable uses of the components or systems.

Global Vehicle Motor - GVM

Overview 5
- Overview 6
- Typical Efficiency Maps 7
- Motor Performance definitions 7

Technical Characteristics 8
- GVM142 Low Voltage Windings - Natural Convection Cooling 8
- GVM210 Low Voltage Windings - Natural Convection Cooling 8
- GVM142 Low Voltage Windings - Liquid Cooling 9
- GVM210 Low Voltage Windings - Liquid Cooling 9
- GVM142 High Voltage windings - Liquid Cooling 10
- GVM210 High Voltage windings - Liquid Cooling 10
- Liquid Cooling Pressure Drop 11

Dimensions 12
- GVK142 (Kit Version) 12
- Standard Version (EHP Applications) 13
- GVK210 (Kit Version) 14
- Standard Version (Traction Applications) 15
- Standard Version (Electro-Hydraulic Pump (EHP) Applications) 16

Cable and Cooling Accessories 18

Order Code 20

Tel: +45 63 12 83 00 | Email: ps@hymatik.com | www.hymatik.com | Hvidkaervej 27a, DK-5250 Odense SV, Denmark

Tel: +45 63 12 83 00 | Email: ps@hymatik.com | www.hymatik.com | Hvidkaervej 27a, DK-5250 Odense SV, Denmark

Global Vehicle Motor - GVM

Overview

Description

PMAC servomotors offer the best solution to meet the requirements of vehicle duty performance. The torque density and speed capabilities of Parker Permanent Magnet AC motors (PMAC) combined with a voltage-matched inverter provide the speed and torque required to achieve breakthrough performance in a variety of vehicle platforms.
The GVM is a powerful choice for both on and off-road vehicles, engineered for Traction, Electro-hydraulic Pumps (EHP) and auxiliary applications.
The GVM motor line has been designed to be used in a wide variety of vehicle applications including; construction vehicles, refuse truck, city buses, street sweeper, motorcycles and scooters, light commercial vehicles and watercraft.

Features

- High efficiency
- Compactness (High power density)
- Can be used either as motor or generator
- Operating voltages available from 24 to 800 VDC
- Rare earth magnets allow high temperature operation
- Patent pending cooling
- Customisation capability including specific mechanical design

Typical Applications

- Electric motors/generators for hybrid applications
- Electric motors for motorbikes, scooters...
- Traction applications
- Electro-hydraulic pumps for high power cylinders
- Electric power steering
- Auxiliary applications as fan/compressors for air conditionning

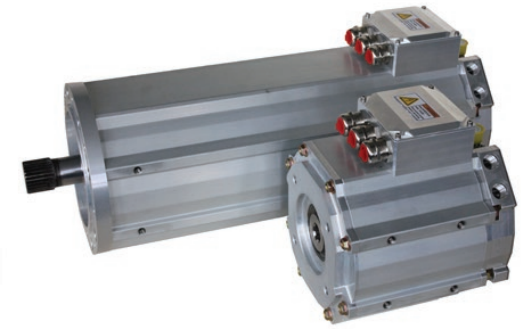

Technical Characteristics - Overview

Motor type	Permanent Magnet synchronous motor
Magnet materials	Rare earth magnets
Number of poles	12
Batterry voltage	24 to 800 VDC
Power range	up to 170 kW (continuous)
Torque range	up to 710 Nm (peak)
Speed range	up to 9800 min^{-1}
Ambient temperature*	liquid cooled: -40…+120 °C natural convection: -40…+65 °C
Storage temperature*	-40…+120 °C
Sensor	Resolver or SinCos encoder
Insulation of the stator winding	Class H with potting
Protection	IP67 as standard IP6K9K on request
Random vibration	0,1 g^2/Hz in frequency range 5...2000 Hz (12 g rms – 3x8h)
Operational shock	25 g, 11 ms, 3x6 (with 2 directions per axis)
Thermal protection	1 PTC probes and 1 KTY84-130 sensor
Shaft end	Spline shaft (male or female), other possibilities on request
Connections	Terminal box (flying cables for kits); connector for feedback
Marking	CE

* With resolver as feedback
Note: the motors are designed for horizontal operation. In case of vertical installation, please contact us.
In case of axial or radial load on the shaft, please consult the acceptable limits on the GVM technical manual.

Tel: +45 63 12 83 00 | Email: ps@hymatik.com | www.hymatik.com | Hvidkaervej 27a, DK-5250 Odense SV, Denmark

GVM Motors: A Powerful Range

Overview

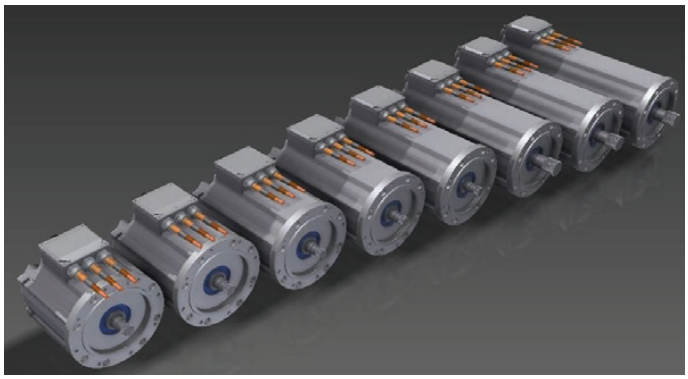

- Continuous power up to 170 kW
- High power density & compactness
- Peak torque up to 710 Nm
- Rotational speed up to 9800 rpm
- Low inertia / high dynamic
- Low and high voltage options 24 VDC to 800 VDC
- High modularity of standard lamination stack length
- Hollow spline shaft available for EHP and solid spline shaft for traction application

Cooling System

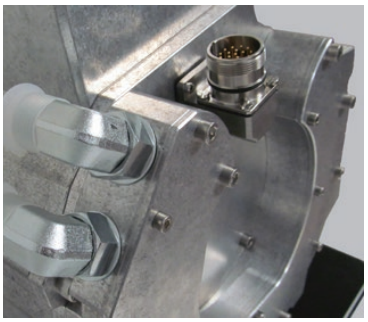

- Enables high power density
- Advised cooling liquid: Water/Glycol 50% for the best compromise
- Circular stator comprising the cooling system can be inserted as a kit in any circular housing (Parker or customer)
- Natural convection cooling alternative available for low power / low speed

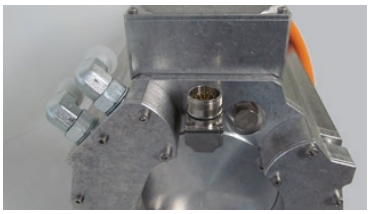

Rugged Design

- Designed to be shock-proof, vibration-proof, salt spray resistant
- Gore vent: to avoid condensation in case of sudden T° variation or during storage at low T°
- Ambient T°: -40 °C to +120 °C (liquid cooling)
- IP67 standard; IP6K9K on request

GVK Motors:

High customisation level requested. Only for high volumes and for OEM applications

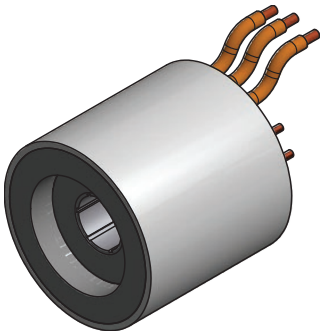

- Available on request as a potted circular stator including the cooling system
- Provides the customer with a bespoke and integrated mechanical design
- GVK range has the same electrical characteristics as GVM range
- Parker is able to offer support in the integration of GVM kits, please contact us

Tel: +45 63 12 83 00 | Email: ps@hymatik.com | www.hymatik.com | Hvidkaervej 27a, DK-5250 Odense SV, Denmark

Typical Efficiency Maps

GVM Motors: an efficient range.

The PMAC efficiency is far higher than induction motor one of the same power range.

Only when using the best component technology and optimal design characteristics do traction motors/ generators and controllers minimize losses both during motoring and power generation - increasing vehicle range. Variable speed system allows higher efficiency even at low speed.

GVM210-400 in Motor operation mode

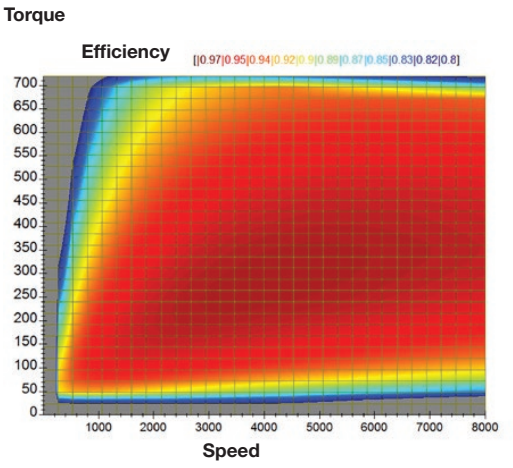

GVM210-400 in Generator operation mode

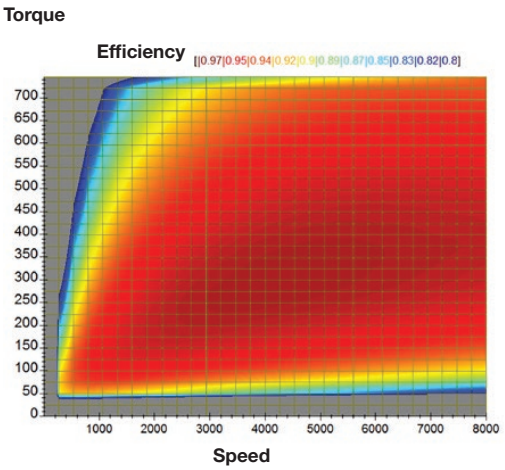

Motor Performance definitions

GVM Series motors are designed to meet the power requirements in a wide variety of vehicle applications. The GVM has the ability to operate at different battery voltages without loss of power.

- From 24 to 800 VDC
- Numerous rotor lengths
- Multiple winding configurations per length

By selecting the appropriate voltage, rotor length and winding variation, the following parameters can refined to match the vehicle's specific performance requirements:

- Peak torque
- Peak power
- Rated torque
- Rated speed
- Rated power
- Maximum speed

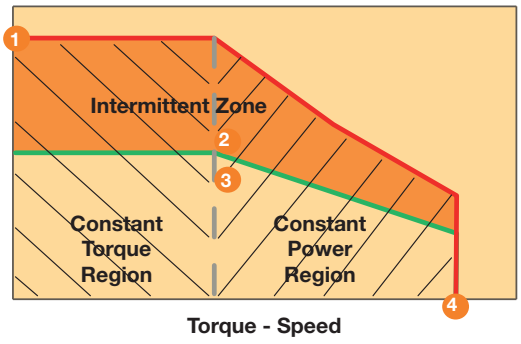

Torque - Speed

Parameters	Battery DC Voltage [V]	Rated Torque Mn [Nm]	Rated Power Pn [kW]	Rated Current In [Arms]	Rated Speed Nn [min^{-1}]	Peak Torque Mp [Nm]	Peak Power Pp [kW]	Peak Current Ip [Arms]	Maximum Speed Nmax [min^{-1}]
		2			3	1			4

Tel: +45 63 12 83 00 | Email: ps@hymatik.com | www.hymatik.com | Hvidkaervej 27a, DK-5250 Odense SV, Denmark

Technical Characteristics

GVM142 Low Voltage Windings - Natural Convection Cooling

Motor	Battery DC Voltage [V]	Rated Torque Mn [Nm]	Rated Power Pn [kW]	Rated Current In [Arms]	Rated Speed Nn [min⁻¹]	Peak Torque Mp [Nm]	Peak Power Pp [kW]	Peak Current Ip [Arms]	Maximum Speed Nmax [min⁻¹]
GVM142-050-DPN	24	8.99	3.03	125	3220	40	7.2	691.1	3800
GVM142-050-GPN	36	6.74	3.18	87.1	4500	40	10.4	625.3	4900
GVM142-050-MPN	48	6.33	3.12	64	4700	40	10.9	486.4	5200
GVM142-050-YPN	72	6.74	3.18	42.6	4500	40	10.4	305.4	5000
GVM142-050-ZPN	80	6.12	3.08	37.2	4800	40	11.1	291.8	5200
GVM142-050-EQN	96	6.54	3.15	31.2	4600	40	10.6	230.4	4950
GVM142-050-NQN	120	7.87	3.22	26.1	3900	40	9.0	162.1	4400
GVM142-075-DPN	24	14.3	2.84	129	1890	62	6.7	715.4	2200
GVM142-075-DPN	36	9.36	3.43	87.5	3500	62	11.5	715.3	3500
GVM142-075-GPN	48	7.26	3.04	62.6	4000	62	14.3	647.1	4000
GVM142-075-YPN	72	10.8	3.52	44.3	3100	62	10.4	316.1	3100
GVM142-075-YPN	80	9.36	3.43	38.6	3500	62	11.7	316.1	3500
GVM142-075-ZPN	96	8.13	3.24	32.3	3800	62	13.6	302.0	3800
GVM142-075-EQN	120	8.13	3.24	25.5	3800	62	13.1	238.3	3800
GVM142-100-DPN	24	18.1	2.74	121	1440	85	6.9	742.6	1750
GVM142-100-DPN	36	14.8	3.57	101	2300	85	11.4	742.6	2700
GVM142-100-GPN	48	11.8	3.58	73.6	2900	85	14.2	671.9	3100
GVM142-100-YPN	72	15.5	3.49	46.3	2150	85	10.2	328.1	1350
GVM142-100-YPN	80	14.4	3.61	43.2	2400	85	11.5	328.1	2650
GVM142-100-ZPN	96	12.3	3.62	35.8	2800	85	13.5	313.5	3000
GVM142-100-DQN	120	11.8	3.58	29.2	2900	85	14.1	266.2	3100

GVM210 Low Voltage Windings - Natural Convection Cooling

Motor	Battery DC Voltage [V]	Rated Torque Mn [Nm]	Rated Power Pn [kW]	Rated Current In [Arms]	Rated Speed Nn [min⁻¹]	Peak Torque Mp [Nm]	Peak Power Pp [kW]	Peak Current Ip [Arms]	Maximum Speed Nmax [min⁻¹]
GVM210-050-APN	24	22.7	3.91	176	1650	82	8.7	711.3	2100
GVM210-050-APN	36	17	5.5	134	3090	82	14.8	711.3	3300
GVM210-050-APN	48	13.2	5.23	105	3800	82	20.5	711.2	4000
GVM210-050-MPN	72	13.2	5.23	69.3	3800	82	20.4	467.4	4000
GVM210-050-SPN	80	14.3	5.39	64	3600	82	19.3	399.0	3900
GVM210-050-XPN	96	14.9	5.45	53.4	3500	82	18.7	320.8	3800
GVM210-050-DQN	120	15.1	5.47	43.9	3450	82	18.5	259.7	3800
GVM210-100-YNN	24	45	4.2	184	893	173	9.8	815.7	1100
GVM210-100-YNN	36	39.5	6.13	163	1480	173	16.2	815.7	1600
GVM210-100-YNN	48	33.1	6.93	138	2000	173	22.6	815.7	2100
GVM210-100-DPN	72	25.5	6.67	90.3	2500	173	29.3	685.1	2800
GVM210-100-GPN	80	27.1	6.82	82.6	2400	173	28.1	590.6	2700
GVM210-100-MPN	96	26.3	6.75	66.5	2450	173	28.0	489.4	2600
GVM210-100-SPN	120	24.7	6.58	53.3	2550	173	29.3	417.8	2700
GVM210-150-YNN	36	58.4	5.79	159	948	262	15.7	818.4	1050
GVM210-150-YNN	48	52	7.16	142	1310	262	22.1	818.3	1450
GVM210-150-APN	72	41.4	7.8	104	1800	262	31.6	747.2	2000
GVM210-150-DPN	80	40.1	7.77	93.1	1850	262	32.5	687.4	2000
GVM210-150-JPN	96	41.4	7.8	77.4	1800	262	31.5	554.3	1950
GVM210-150-QPN	120	40.1	7.77	62.9	1850	262	32.4	464.5	2000

GVM Stator connected to a heat-exchange surface at 60 °C without water cooling
(Characteristics are given for an optimal drive / motor association without any limitation coming from the drive)
These products without liquid cooling are typically dedicated to EHP due to the low speed level available.

Tel: +45 63 12 83 00 | Email: ps@hymatik.com | www.hymatik.com | Hvidkaervej 27a, DK-5250 Odense SV, Denmark

GVM142 Low Voltage Windings - Liquid Cooling

Motor	Battery DC Voltage [V]	Rated Torque Mn [Nm]	Rated Power Pn [kW]	Rated Current In [Arms]	Rated Speed Nn [min^{-1}]	Peak Torque Mp [Nm]	Peak Power Pp [kW]	Peak Current Ip [Arms]	Maximum Speed Nmax [min^{-1}]
GVM142-050-MPW	24	18.4	3.47	178	1800	40	4.6	486.7	2700
GVM142-050-MPW	36	18.2	5.73	177	3000	40	7.9	486.7	4500
GVM142-050-MPW	48	18.1	7.94	175	4200	40	11.0	486.7	6300
GVM142-050-MPW	72	17.6	12	172	6500	40	17.0	486.6	9750
GVM142-050-MPW	80	17.4	13.1	171	7200	40	18.9	486.6	9500
GVM142-050-YPW	96	17.8	10.1	109	5400	40	14.2	305.6	8100
GVM142-050-ZPW	120	17.6	11.8	103	6400	40	16.7	292.0	9500
GVM142-075-MPW	24	29	3.39	182	1110	62	4.4	503.6	1650
GVM142-075-MPW	36	29	5.81	183	1910	62	7.8	503.5	2850
GVM142-075-MPW	48	29	7.9	183	2600	62	10.9	503.5	3900
GVM142-075-MPW	72	28.5	12.3	181	4100	62	17.0	503.5	6150
GVM142-075-MPW	80	28.3	13.9	180	4700	62	19.1	503.5	7050
GVM142-075-MPW	96	28	16.4	178	5600	62	23.1	503.5	8400
GVM142-075-MPW	120	27.4	19.8	175	6900	62	28.4	503.5	9500
GVM142-100-MPW	24	40	3.38	187	806	85	3.9	523.0	1200
GVM142-100-MPW	36	40	5.88	187	1400	85	7.6	523.0	2100
GVM142-100-MPW	48	39.9	8.15	187	1950	85	10.7	523.0	2925
GVM142-100-MPW	72	39.4	12.4	185	3000	85	16.9	523.0	4500
GVM142-100-MPW	80	39.2	14	185	3400	85	19.0	523.0	5100
GVM142-100-MPW	96	38.8	17.1	183	4200	85	23.2	523.0	6300
GVM142-100-MPW	120	38.2	20.8	180	5200	85	28.6	523.0	7800

GVM210 Low Voltage Windings - Liquid Cooling

Motor	Battery DC Voltage [V]]	Rated Torque Mn [Nm]	Rated Power Pn [kW]	Rated Current In [Arms]	Rated Speed Nn [min^{-1}]	Peak Torque Mp [Nm]	Peak Power Pp [kW]	Peak Current Ip [Arms]	Maximum Speed Nmax [min^{-1}]
GVM210-050-DPW	24	38.7	5.66	272	1400	82	8.4	654.8	2100
GVM210-050-DPW	36	38.4	9.03	271	2250	82	13.6	654.8	3370
GVM210-050-DPW	48	38.1	12.3	269	3100	82	18.7	654.8	4650
GVM210-050-DPW	72	37.3	18.3	265	4690	82	28.9	654.8	7050
GVM210-050-DPW	80	37	20.9	263	5390	82	32.3	654.7	8000
GVM210-050-DPW	96	36.4	24.3	260	6390	82	39.0	654.7	8000
GVM210-050-JPW	120	36.4	24.3	209	6390	82	38.5	528.0	8000
GVM210-100-DPW	36	88.2	9.7	300	1050	173	13.3	685.8	1570
GVM210-100-DPW	48	87.8	13.3	299	1450	173	18.7	685.8	2170
GVM210-100-DPW	72	86.9	20	297	2200	173	29.3	685.8	3300
GVM210-100-DPW	80	86.5	22.6	296	2500	173	32.9	685.8	3750
GVM210-100-DPW	96	85.7	26.9	293	3000	173	39.7	685.8	4500
GVM210-100-DPW	120	84.4	33.6	290	3800	173	49.1	685.8	5700
GVM210-150-DPW	48	138	13	310	900	262	18.1	688.2	1350
GVM210-150-DPW	72	137	20.8	308	1450	262	28.9	688.2	2170
GVM210-150-DPW	80	136	22.9	307	1600	262	32.5	688.2	2400
GVM210-150-DPW	96	136	27.7	305	1950	262	39.6	688.1	2920
GVM210-150-DPW	120	134	34.4	303	2450	262	48.9	688.1	3670
GVM210-200-DPW	72	186	20.5	312	1050	352	28.4	692.3	1575
GVM210-200-DPW	80	186	23.3	312	1200	352	32.0	692.3	1800
GVM210-200-DPW	96	185	28.1	310	1450	352	39.2	692.3	2175
GVM210-200-DPW	120	183	34.6	308	1800	352	48.6	692.3	2700
GVM210-300-DPW	80	283	22.5	314	760	530	30.8	692.3	1140
GVM210-300-DPW	96	282	28	314	950	530	38.1	692.3	1420
GVM210-300-DPW	120	281	33.8	312	1150	530	47.5	692.3	1720
GVM210-400-DPW	120	376	33.4	312	850	710	46.4	695.4	1275

GVM Input cooling liquid at 65 °C (Characteristics are given for an optimal drive / motor association without any limitation coming from the drive) / (for alternative cooling temperatures please contact us)

Tel: +45 63 12 83 00 | Email: ps@hymatik.com | www.hymatik.com | Hvidkaervej 27a, DK-5250 Odense SV, Denmark

GVM142 High Voltage windings - Liquid Cooling

Motor	Battery DC Voltage [V]	Rated Torque Mn [Nm]	Rated Power Pn [kW]	Rated Current In [Arms]	Rated Speed Nn [min^{-1}]	Peak Torque Mp [Nm]	Peak Power Pp [kW]	Peak Current Ip [Arms]	Maximum Speed Nmax [min^{-1}]
GVM142-050-XQW	320	17.6	12.3	39	6700	40	17.3	110.4	9500
GVM142-050-DRW	400	17.6	12.2	30.7	6600	40	17.1	87.0	9500
GVM142-050-RRW	640	17.7	11.5	18.1	6220	40	16.1	51.1	8890
GVM142-075-NQW	320	27.6	18.5	58.8	6400	62	25.9	167.8	9500
GVM142-075-SQW	400	27.5	19.3	48.9	6700	62	27.2	140.1	9500
GVM142-075-XQW	480	27.5	19	39.9	6600	62	26.6	114.2	9500
GVM142-075-ERW	640	27.6	18.7	29.5	6500	62	26.3	84.4	9500
GVM142-100-EQW	320	37	26.3	83.1	6800	85	37.2	247.7	9500
GVM142-100-NQW	400	37.6	23.6	59.4	6000	85	32.8	174.3	9000
GVM142-100-SQW	480	37.6	23.6	49.6	6000	85	32.9	145.6	9000
GVM142-100-ZQW	640	37.5	23.8	37.2	6050	85	33.1	109.5	8570

GVM210 High Voltage windings - Liquid Cooling

Motor	Battery DC Voltage [V]	Rated Torque Mn [Nm]	Rated Power Pn [kW]	Rated Current In [Arms]	Rated Speed Nn [min^{-1}]	Peak Torque Mp [Nm]	Peak Power Pp [kW]	Peak Current Ip [Arms]	Maximum Speed Nmax [min^{-1}]
GVM210-050-QQW	320	36.9	21.2	66.4	5490	82	32.9	165.3	8000
GVM210-050-VQW	400	36.8	22.1	55	5740	82	34.4	137.6	8000
GVM210-050-VQW	480	36	26.2	54.1	6940	82	41.4	137.5	8000
GVM210-050-FRW	640	36	26	40	6890	82	40.9	101.7	8000
GVM210-100-SPW	320	78.6	53.5	166	6500	173	82.3	418.1	8000
GVM210-100-XPW	400	78.6	53.5	133	6500	173	83.2	336.1	8000
GVM210-100-DQW	480	79.1	52.2	108	6300	173	81.0	272.1	8000
GVM210-100-MQW	640	78.3	54.1	83.6	6600	173	84.3	211.6	8000
GVM210-150-DPW	320	115	84.1	262	7000	262	136.5	687.9	8000
GVM210-150-JPW	400	114	84.9	210	7100	262	138.1	554.7	8000
GVM210-150-SPW	480	118	80	163	6500	262	125.6	419.5	8000
GVM210-150-ZPW	640	118	80	122	6500	262	125.1	312.7	8000
GVM210-200-DPW	320	164	89.4	278	5200	352	137.1	692.1	7800
GVM210-200-DPW	400	152	105	259	6610	352	172.2	692.0	8000
GVM210-200-JPW	480	154	103	211	6410	352	167.0	558.1	8000
GVM210-200-SPW	640	153	104	159	6510	352	168.8	421.9	8000
GVM210-300-DPW	320	262	93.2	293	3400	530	136.9	692.2	5100
GVM210-300-DPW	400	251	113	281	4300	530	172.1	692.1	6450
GVM210-300-DPW	480	238	132	267	5300	530	207.6	692.0	7950
GVM210-300-DPW	640	205	155	232	7220	530	277.8	691.9	8000
GVM210-400-DPW	320	358	93.6	299	2500	710	136.0	695.3	3750
GVM210-400-DPW	400	348	116	290	3190	710	172.0	695.2	4800
GVM210-400-DPW	480	336	137	281	3900	710	207.6	695.1	5850
GVM210-400-DPW	640	306	170	257	5310	710	278.6	695.0	7950

GVM Input cooling liquid at 65 °C (Characteristics are given for an optimal inverter / motor association without any limitation coming from the drive)
(for alternative cooling temperatures please contact us)

Tel: +45 63 12 83 00 | Email: ps@hymatik.com | www.hymatik.com | Hvidkaervej 27a, DK-5250 Odense SV, Denmark

Liquid Cooling Pressure Drop

With Water-Glycol 50 % - Input at 65 °C

GVM142

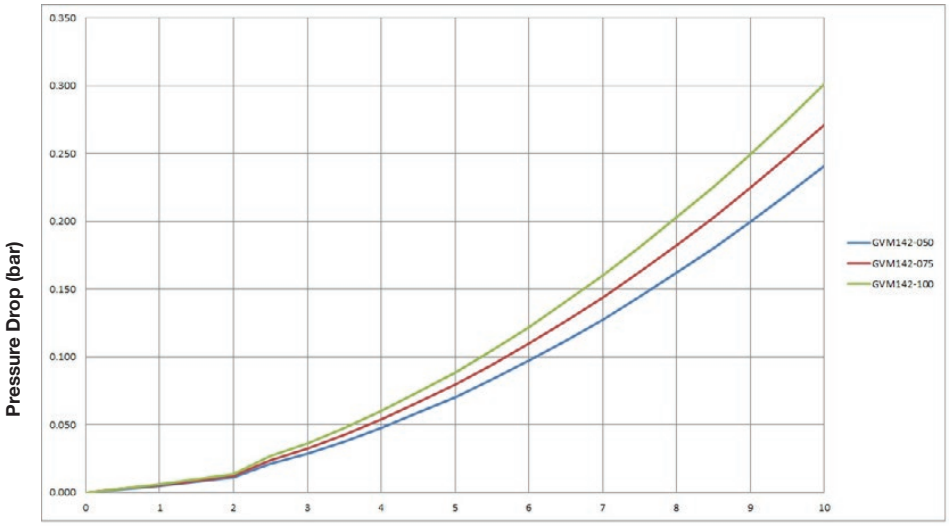

GVM210

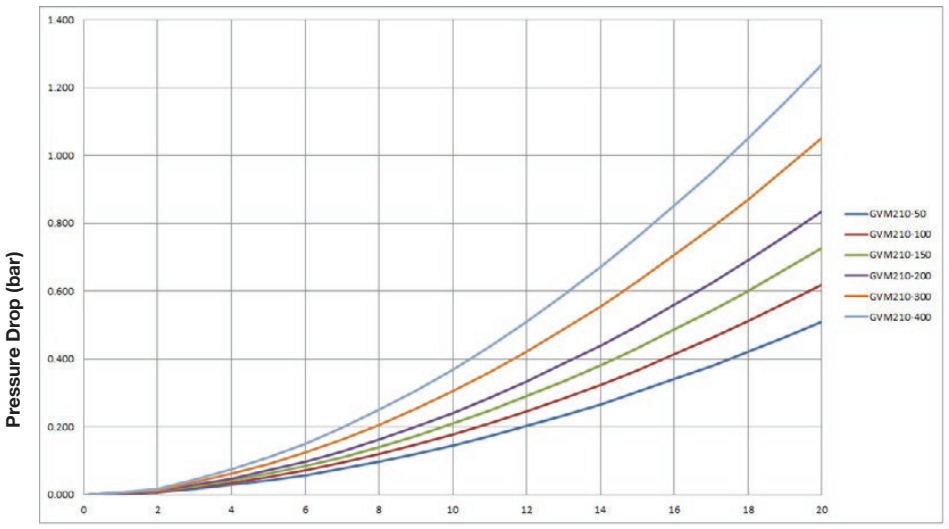

Please refer to the motor datasheet or technical manual for more information (PVD3668).
For other types of cooling liquid thank you to consult us.

Tel: +45 63 12 83 00 | Email: ps@hymatik.com | www.hymatik.com | Hvidkaervej 27a, DK-5250 Odense SV, Denmark

Dimensions

GVK142 (Kit Version)*

High customisation level requested. Only for high volumes and for OEM applications

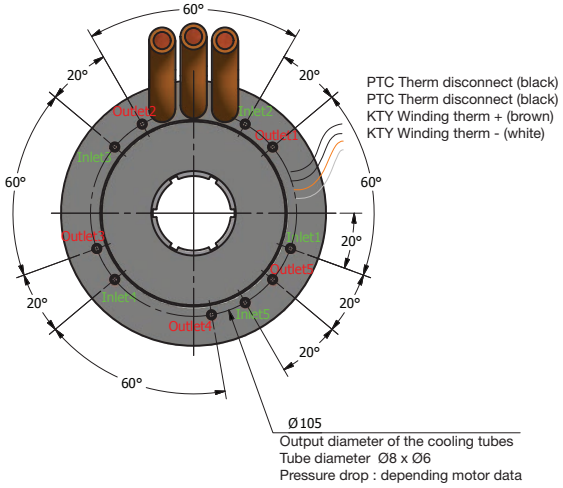

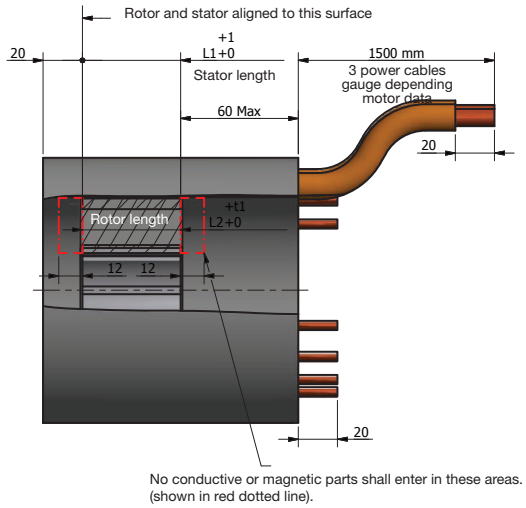

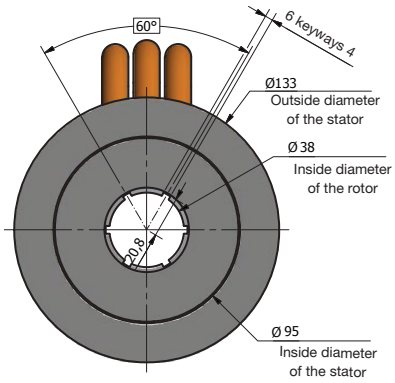

Motor size	L1 [mm]	L2 [mm]	t1	Weight [kg]
GVK142-075	75	75	1	8.5
GVK142-100	100	100	1	10.5
GVK142-150	150	150	1.5	14.5

WARNING

The motor has to be shrinked in the customer housing by Parker
Parker will support the customer to determine part dimensions

To have the pressure drop given by Parker:
Connect all of the Inlet in // to the cooling system input
Connect all of the Outlet in // to the cooling system output

* Outside dimensions are subject to change depending on the winding symbol. For further information, please contact your local Parker representative.

Tel: +45 63 12 83 00 | Email: ps@hymatik.com | www.hymatik.com | Hvidkaervej 27a, DK-5250 Odense SV, Denmark

Standard Version (EHP Applications)

GVM142 (SAE A)

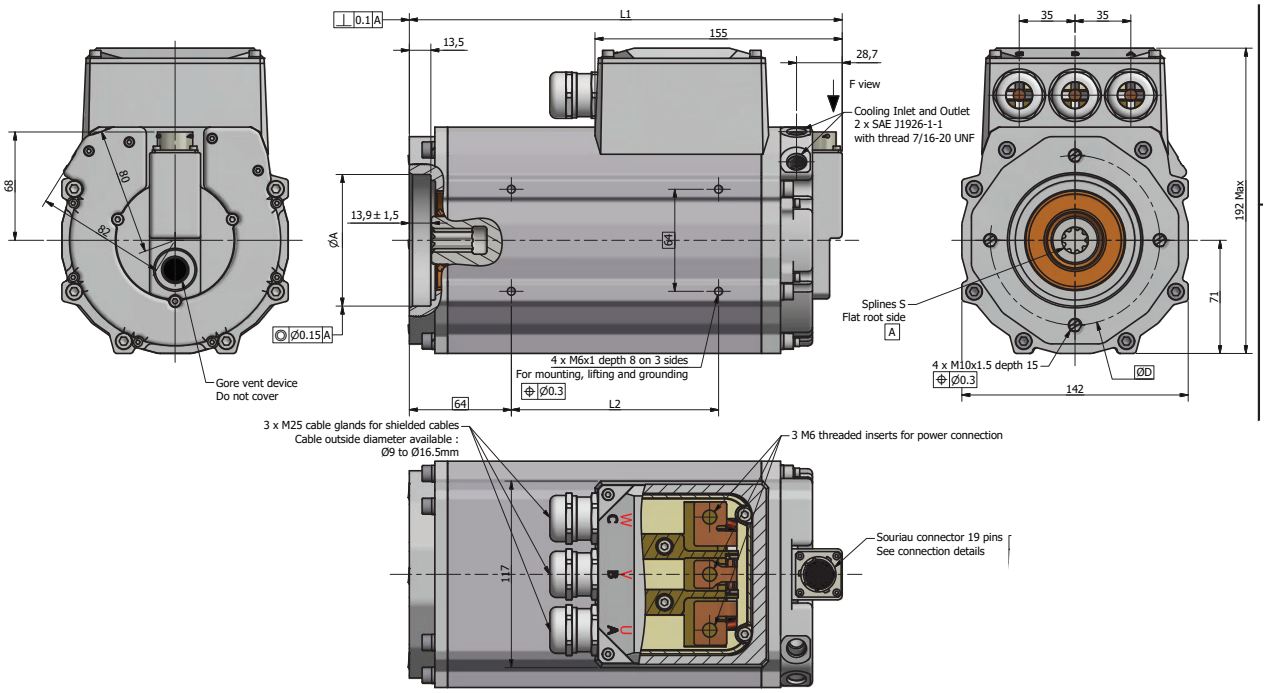

Motor size	L1 [mm]	L2 [mm]	Weight [kg]	SAE A
GVM142-050	225 max	80	16	x
GVM142-075	250 max	105	18.5	x
GVM142-100	275 max	130	20.5	x

Front interface data			
SAE choice	ØA	E	S
SAE A	Ø82.55 G7	25	SAE A 9T 16/32 DP

Tel: +45 63 12 83 00 | Email: ps@hymatik.com | www.hymatik.com | Hvidkaervej 27a, DK-5250 Odense SV, Denmark

GVK210 (Kit Version)*

High customisation level requested. Only for high volumes and for OEM applications

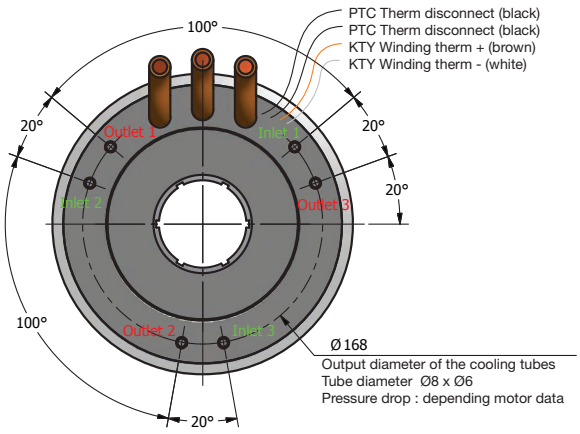

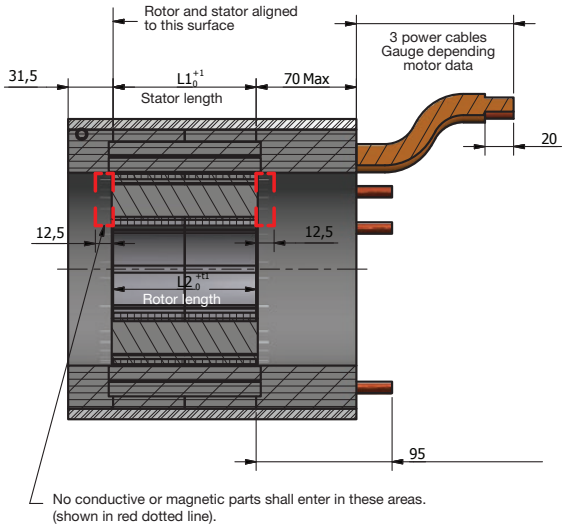

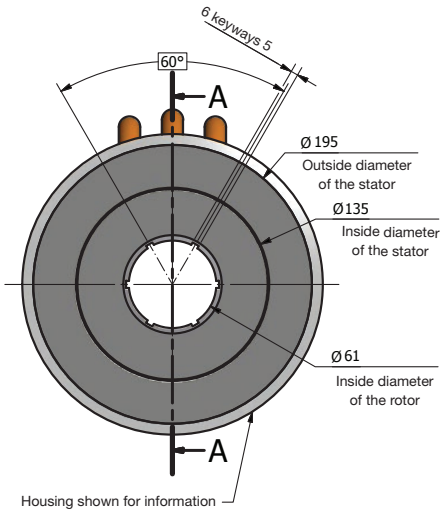

Motor size	L1 [mm]	L2 [mm]	t1	Weight [kg]
GVK210-050	50	50	0.5	14
GVK210-100	100	100	1	22
GVK210-150	150	150	1.5	30
GVK210-200	200	200	2	38.5
GVK210-300	300	300	3	54.5
GVK210-400	400	400	4	71

WARNING

The motor has to be shrinked in the customer housing by Parker
Parker will support the customer to determine part dimensions

To have the pressure drop given by Parker:
Connect all of the Inlet in // to the cooling system input
Connect all of the Outlet in // to the cooling system output

* Outside dimensions are subject to change depending on the winding symbol. For further information, please contact your local Parker representative.

Standard Version (Traction Applications)

GVM210

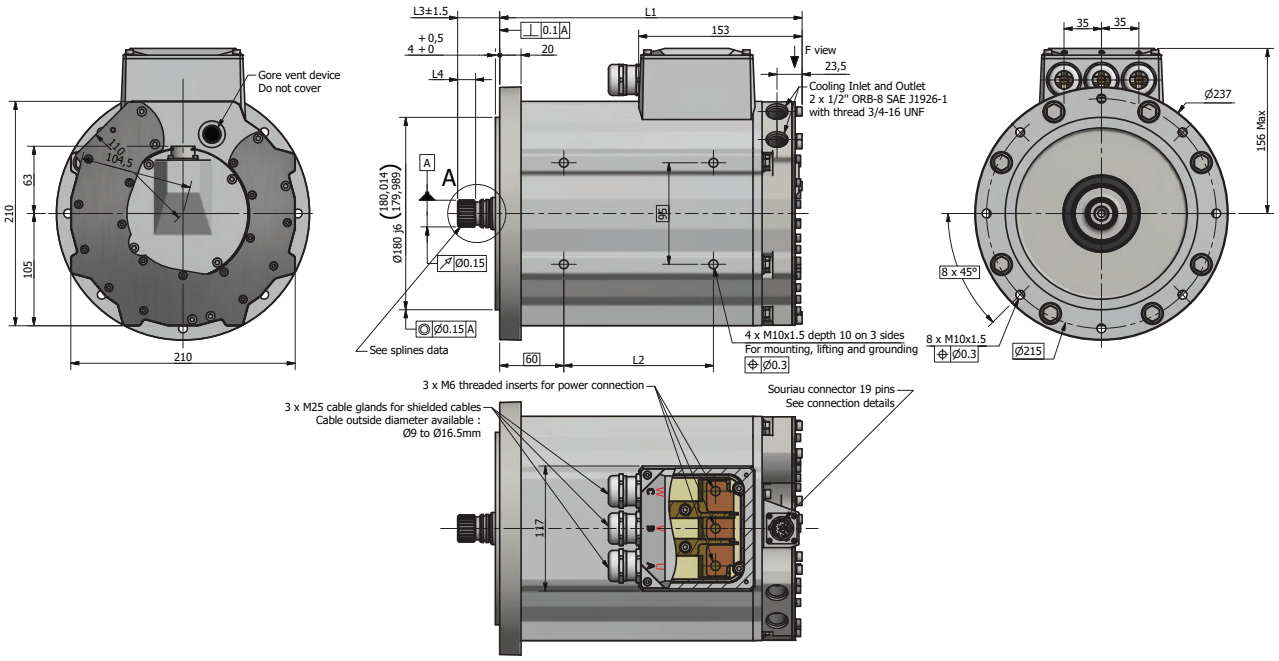

Motor size	L1 [mm]	L2 [mm]	Shaft interface	L3 [mm]	L4 [mm]	Weight [kg]
GVM210-050	234 max	90	TA	39.4	16.8	28.5
GVM210-100	285 max	140	TA	39.4	16.8	38.5
GVM210-150	336 max	190	TB	63.5	38.1	49
GVM210-200	387 max	240	TB	63.5	38.1	59
GVM210-300	489 max	340	TB	63.5	38.1	80
GVM210-400	591 max	440	TB	63.5	38.1	100.5

	Spline interface TA		Spline interface TB
GVM210 Motor frame size	050 - 100		150 - 400
Involute Spline	ANSI B92.2M		ANSI B92.1
Flat root side fit	Class 6h		Class 5
Number of teeth	24		27
Module	1.000		-
Spline pitch	-		16/32
Pressure angle	30°		30°

Tel: +45 63 12 83 00 | Email: ps@hymatik.com | www.hymatik.com | Hvidkaervej 27a, DK-5250 Odense SV, Denmark

Standard Version (Electro-Hydraulic Pump (EHP) Applications)

GVM210

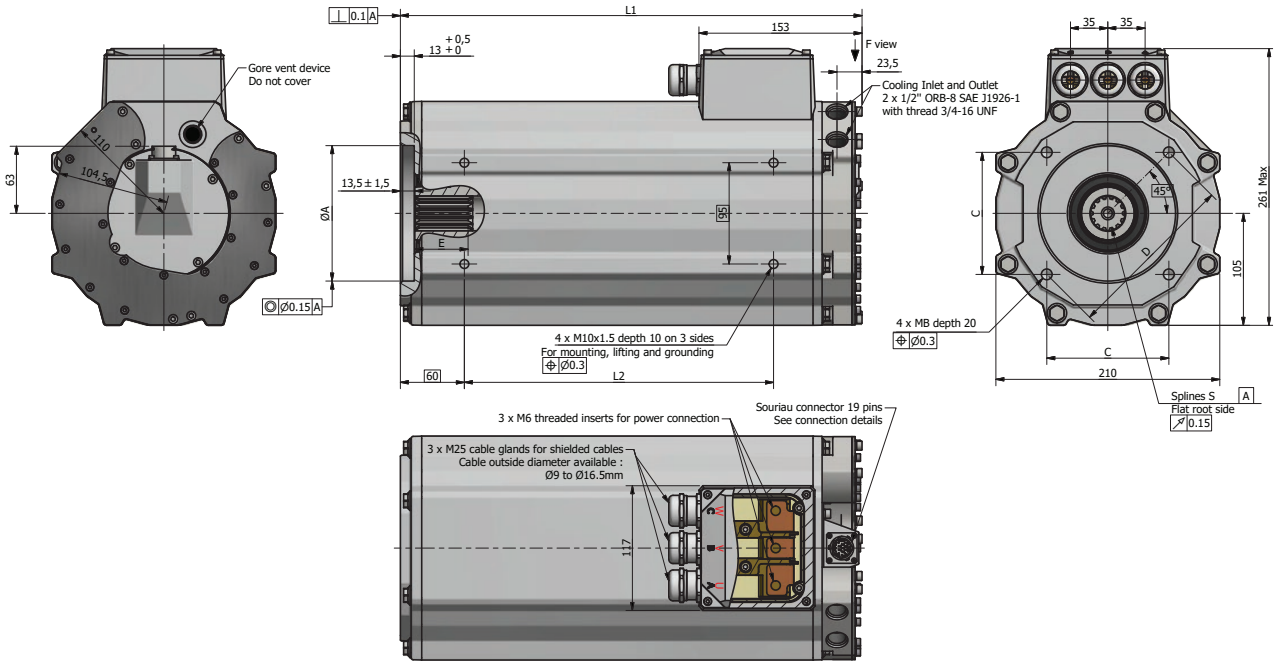

Motor size	L1 [mm]	L2 [mm]	Weight [kg]	SAE A	SAE B	SAE C
GVM210-050	234 max	90	27.5	x	x	
GVM210-100	285 max	140	38		x	
GVM210-150	336 max	190	48		x	x
GVM210-200	387 max	240	58.5			x
GVM210-300	489 max	340	79			x
GVM210-400	591 max	440	99			x

Front interface data						
SAE choice	ØA	N	B	C	D	S
SAE A	Ø82.70 G7	2	10	/	106.4	SAE A 9T 16/32 DP
SAE B	Ø101.75 G7	2	12	/	146	SAE B 13T 16/32 DP
SAE C	Ø127.15 G7	4	12	114.5	/	SAE C 14T 12/24 DP

Tel: +45 63 12 83 00 | Email: ps@hymatik.com | www.hymatik.com | Hvidkaervej 27a, DK-5250 Odense SV, Denmark

Tel: +45 63 12 83 00 | Email: ps@hymatik.com | www.hymatik.com | Hvidkaervej 27a, DK-5250 Odense SV, Denmark

Cable and Cooling Accessories

Sensor cable

Description	Order code *
Connector + sensor cable / SinCos(1)	**CBFSC0H0-SRX-000-xxx0-00**
Connector + sensor cable / Resolver	**CBFRE0H0-SRX-000-xxx0-00**

* These 3 digits (xxx) indicate cable length in meters : 001, 002, 003 or 004 meters as standard.



(1) **In case of SinCos encoder, take care to connect the cable shield to the vehicle chassis. The motor housing must be at the same potential than the drive body.**

Tel: +45 63 12 83 00 | Email: ps@hymatik.com | www.hymatik.com | Hvidkaervej 27a, DK-5250 Odense SV, Denmark

GVM Fittings (motor side)

F5OMX Male stud connector



C5OMX Male stud elbow connector



Motor	Description	Order code	
		Steel	Stainless steel
GVM142	Male stud connector	4F5OMXS	4F5OMXSS
GVM210		8F5OMXS	8F5OMXSS
GVM142	Male stud elbow	4C5OMXS	4C5OMXSS
GVM210		8C5OMXS	8C5OMXSS

Hoses Fittings (between hoses and GVM connector)

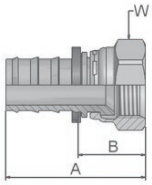



Motor	Order code	Hose I.D.		Thread	Tube	A	B	W
		inch	mm	UNF	mm	mm	mm	mm
GVM142	30682-4-4-SM	1/4	6.4	7/16x20	1/4	40	21	14
GVM210	36882-8-8-SM	1/2	12.7	3/4x16	1/2	51	25	22

Hoses



Motor	Order code	Hose I.D.		Hose O.D.	Max. Working Pressure		Min. Burst Pressure		Minimum Bend Radius
		inch	mm	mm	MPa	psi	MPa	psi	mm
GVM142	801-4-xxx-RL	1/4	6.4	12.7	2.4	350	9.7	1400	65
GVM210	801-8-xxx-RL	1/2	12.7	19.8	2.1	300	8.4	1200	125

With water-glycol or oil up to 85°C

For more information please refer to the GVM technical manual available on our website (ref: PVD3668)

Tel: +45 63 12 83 00 | Email: ps@hymatik.com | www.hymatik.com | Hvidkaervej 27a, DK-5250 Odense SV, Denmark

Order Code

	1	2	3	4	5	6	7	8	9	10	11
Order example	**GVM**	**210**	**150**	**AA**	**W**	**A**	**A**	**A**	**TA**	**1**	**G**

1	**Motor series**		
	GVM	Global Vehicle Motor	
	GVK	Global Vehicle Kit Motor (on request)	
2	**Frame size (outer width)**		
	142	142 mm	
	210	210 mm	
3	**Stack length***		
	050		data see chapter "Technical Characteristics"
	075	GVM142 only	
	100		
	150	GVM210 only	
	200		
	300		
	400		
4	**Winding symbol**		
	....	see motor tables	
5	**Cooling system**		
	N	Natural convection	
	W	Liquid cooling (please contact us for flow & cooling temperature data)	
6	**Feedback**		
	A	Resolver (standard 2 poles)	
	S	Sin/Cos RM22A (low voltage applications)	
	0	No feedback sensor	
7	**Thermal switch**		
	A	PTC	
8	**Thermal sensor**		
	B	Equivalent to KTY84-130 thermistor	
9	**Interface**		
	TA	Traction mount, shaft 24 teeth [1] (GVM210 only)	
	TB	Traction mount, shaft 27 teeth [1] (GVM210 only)	
	PA	EHP mount, SAE A, 2 holes	
	PB	EHP mount, SAE B, 2 holes (GVM210 only)	
	PC	EHP mount, SAE C, 4 holes (GVM210 only)	
	00	Kit version	
10	**Power connection**		
	1	Terminal box	
	2	Flying cables (kit version only)	
11	**Options**		
	G	Global (standard motor)	
	N	North America (custom motor)	
	E	Europe (custom motor)	
	A	Asia (custom motor)	

* "Technical Characteristics" (page 8)
[1] see traction applications (page 15)"

Tel: +45 63 12 83 00 | Email: ps@hymatik.com | www.hymatik.com | Hvidkaervej 27a, DK-5250 Odense SV, Denmark

Tel: +45 63 12 83 00 | Email: ps@hymatik.com | www.hymatik.com | Hvidkaervej 27a, DK-5250 Odense SV, Denmark

Tel: +45 63 12 83 00 | Email: ps@hymatik.com | www.hymatik.com | Hvidkaervej 27a, DK-5250 Odense SV, Denmark

Parker's Motion & Control Technologies

At Parker, we're guided by a relentless drive to help our customers become more productive and achieve higher levels of profitability by engineering the best systems for their requirements. It means looking at customer applications from many angles to find new ways to create value. Whatever the motion and control technology need, Parker has the experience, breadth of product and global reach to consistently deliver. No company knows more about motion and control technology than Parker. For further info call 00800 27 27 5374



Aerospace

Key Markets

Aftermarket services
Commercial transports
Engines
General & business aviation
Helicopters
Launch vehicles
Military aircraft
Missiles
Power generation
Regional transports
Unmanned aerial vehicles

Key Products

Control systems & actuation products
Engine systems & components
Fluid conveyance systems & components
Fluid metering, delivery & atomization devices
Fuel systems & components
Fuel tank inerting systems
Hydraulic systems & components
Thermal management
Wheels & brakes



Climate Control

Key Markets

Agriculture
Air conditioning
Construction Machinery
Food & beverage
Industrial machinery
Life sciences
Oil & gas
Precision cooling
Process
Refrigeration
Transportation

Key Products

Accumulators
Advanced actuators
CO_2 controls
Electronic controllers
Filter driers
Hand shut-off valves
Heat exchangers
Hose & fittings
Pressure regulating valves
Refrigerant distributors
Safety relief valves
Smart pumps
Solenoid valves
Thermostatic expansion valves



Electromechanical

Key Markets

Aerospace
Factory automation
Life science & medical
Machine tools
Packaging machinery
Paper machinery
Plastics machinery & converting
Primary metals
Semiconductor & electronics
Textile
Wire & cable

Key Products

AC/DC drives & systems
Electric actuators, gantry robots & slides
Electrohydrostatic actuation systems
Electromechanical actuation systems
Human machine interface
Linear motors
Stepper motors, servo motors, drives & controls
Structural extrusions



Filtration

Key Markets

Aerospace
Food & beverage
Industrial plant & equipment
Life sciences
Marine
Mobile equipment
Oil & gas
Power generation & renewable energy
Process
Transportation
Water Purification

Key Products

Analytical gas generators
Compressed air filters & dryers
Engine air, coolant, fuel & oil filtration systems
Fluid condition monitoring systems
Hydraulic & lubrication filters
Hydrogen, nitrogen & zero air generators
Instrumentation filters
Membrane & fiber filters
Microfiltration
Sterile air filtration
Water desalination & purification filters & systems



Fluid & Gas Handling

Key Markets

Aerial lift
Agriculture
Bulk chemical handling
Construction machinery
Food & beverage
Fuel & gas delivery
Industrial machinery
Life sciences
Marine
Mining
Mobile
Oil & gas
Renewable energy
Transportation

Key Products

Check valves
Connectors for low pressure fluid conveyance
Deep sea umbilicals
Diagnostic equipment
Hose couplings
Industrial hose
Mooring systems & power cables
PTFE hose & tubing
Quick couplings
Rubber & thermoplastic hose
Tube fittings & adapters
Tubing & plastic fittings



Hydraulics

Key Markets

Aerial lift
Agriculture
Alternative energy
Construction machinery
Forestry
Industrial machinery
Machine tools
Marine
Material handling
Mining
Oil & gas
Power generation
Refuse vehicles
Renewable energy
Truck hydraulics
Turf equipment

Key Products

Accumulators
Cartridge valves
Electrohydraulic actuators
Human machine interfaces
Hybrid drives
Hydraulic cylinders
Hydraulic motors & pumps
Hydraulic systems
Hydraulic valves & controls
Hydrostatic steering
Integrated hydraulic circuits
Power take-offs
Power units
Rotary actuators
Sensors



Pneumatics

Key Markets

Aerospace
Conveyor & material handling
Factory automation
Life science & medical
Machine tools
Packaging machinery
Transportation & automotive

Key Products

Air preparation
Brass fittings & valves
Manifolds
Pneumatic accessories
Pneumatic actuators & grippers
Pneumatic valves & controls
Quick disconnects
Rotary actuators
Rubber & thermoplastic hose & couplings
Structural extrusions
Thermoplastic tubing & fittings
Vacuum generators, cups & sensors



Process Control

Key Markets

Alternative fuels
Biopharmaceuticals
Chemical & refining
Food & beverage
Marine & shipbuilding
Medical & dental
Microelectronics
Nuclear Power
Offshore oil exploration
Oil & gas
Pharmaceuticals
Power generation
Pulp & paper
Steel
Water/wastewater

Key Products

Analytical Instruments
Analytical sample conditioning products & systems
Chemical injection fittings & valves
Fluoropolymer chemical delivery fittings, valves & pumps
High purity gas delivery fittings, valves, regulators & digital flow controllers
Industrial mass flow meters/controllers
Permanent no-weld tube fittings
Precision industrial regulators & flow controllers
Process control double block & bleeds
Process control fittings, valves, regulators & manifold valves



Sealing & Shielding

Key Markets

Aerospace
Chemical processing
Consumer
Fluid power
General industrial
Information technology
Life sciences
Microelectronics
Military
Oil & gas
Power generation
Renewable energy
Telecommunications
Transportation

Key Products

Dynamic seals
Elastomeric o-rings
Electro-medical instrument design & assembly
EMI shielding
Extruded & precision-cut, fabricated elastomeric seals
High temperature metal seals
Homogeneous & inserted elastomeric shapes
Medical device fabrication & assembly
Metal & plastic retained composite seals
Shielded optical windows
Silicone tubing & extrusions
Thermal management
Vibration dampening

Parker Worldwide

Europe, Middle East, Africa

AE – United Arab Emirates, Dubai
Tel: +971 4 8127100

AT – Austria, St. Florian
Tel: +43 (0)7224 66201

BE/NL/LU – Benelux, Hendrik Ido Ambacht
Tel: +31 (0)541 585 000

BY – Belarus, Minsk
Tel: +48 (0)22 573 24 00

CH – Switzerland, Etoy
Tel: +41 (0)21 821 87 00

CZ – Czech Republic, Prague
Tel: +420 284 083 111

DE – Germany, Kaarst
Tel: +49 (0)2131 4016 0

DK – Denmark, Ballerup
Tel: +45 43 56 04 00

ES – Spain, Madrid
Tel: +34 902 330 001

FI – Finland, Vantaa
Tel: +358 (0)20 753 2500

FR – France, Contamine s/Arve
Tel: +33 (0)4 50 25 80 25

HU – Hungary, Budaörs
Tel: +36 23 885 470

IE – Ireland, Dublin
Tel: +353 (0)1 466 6370

IL – Israel
Tel: +39 02 45 19 21

IT – Italy, Corsico (MI)
Tel: +39 02 45 19 21

NO – Norway, Asker
Tel: +47 66 75 34 00

PL – Poland, Warsaw
Tel: +48 (0)22 573 24 00

PT – Portugal
Tel: +351 22 999 7360

RO – Romania, Bucharest
Tel: +40 21 252 1382

RU – Russia, Moscow
Tel: +7 495 645-2156

SE – Sweden, Borås
Tel: +46 (0)8 59 79 50 00

SL – Slovenia, Novo Mesto
Tel: +386 7 337 6650

TR – Turkey, Istanbul
Tel: +90 216 4997081

UK – United Kingdom, Warwick
Tel: +44 (0)1926 317 878

ZA – South Africa, Kempton Park
Tel: +27 (0)11 961 0700

North America

CA – Canada, Milton, Ontario
Tel: +1 905 693 3000

US – USA, Cleveland
Tel: +1 216 896 3000

Asia Pacific

AU – Australia, Castle Hill
Tel: +61 (0)2-9634 7777

CN – China, Shanghai
Tel: +86 21 2899 5000

HK – Hong Kong
Tel: +852 2428 8008

IN – India, Mumbai
Tel: +91 22 6513 7081-85

JP – Japan, Tokyo
Tel: +81 (0)3 6408 3901

KR – South Korea, Seoul
Tel: +82 2 559 0400

MY – Malaysia, Shah Alam
Tel: +60 3 7849 0800

NZ – New Zealand, Mt Wellington
Tel: +64 9 574 1744

SG – Singapore
Tel: +65 6887 6300

TH – Thailand, Bangkok
Tel: +662 186 7000

TW – Taiwan, Taipei
Tel: +886 2 2298 8987

South America

AR – Argentina, Buenos Aires
Tel: +54 3327 44 4129

BR – Brazil, Sao Jose dos Campos
Tel: +55 080 0727 5374

CL – Chile, Santiago
Tel: +56 22 303 9640

MX – Mexico, Toluca
Tel: +52 72 2275 4200

© 2021 Parker Hannifin Corporation. All rights reserved.

192-300108N10 03/2022

EMEA Product Information Centre
Free phone: 00 800 27 27 5374
(from AT, BE, CH, CZ, DE, DK, EE, ES, FI, FR, IE, IL, IS, IT, LU, MT, NL, NO, PL, PT, RU, SE, SK, UK, ZA)

US Product Information Centre
Toll-free number: 1-800-27 27 537

www.parker.com