Manifold Accessories

Catalog 4190-FP-ACC
May 2007

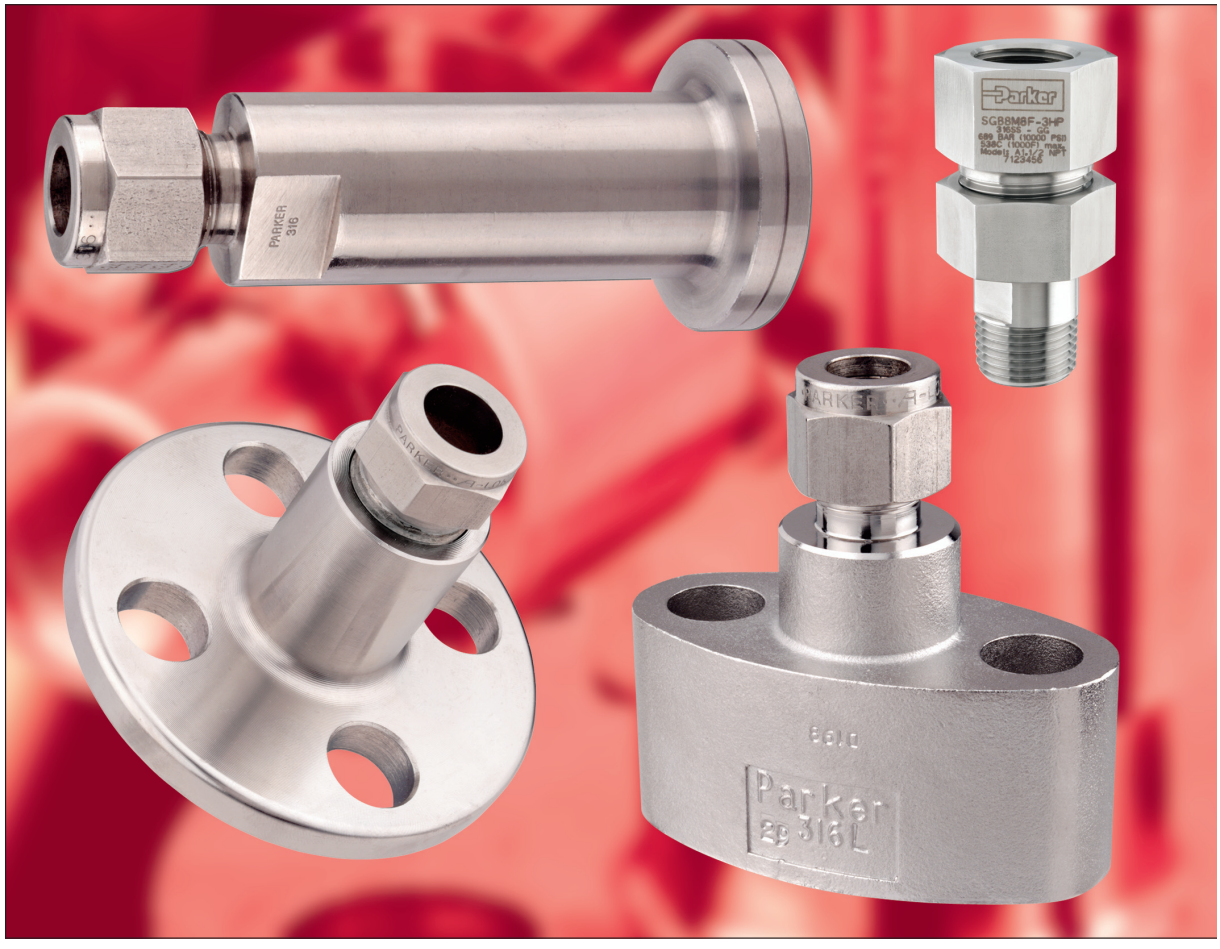

Flanged Products

Contents

Page 3 Lapped joint tube adaptors (LJ)

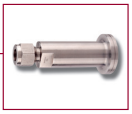

Page 4 Flange to compression connectors (FC)



Page 5 Kidney flanges to compression connectors (KF)



Page 6 Swivel gauge adaptors (SG)



Page 7 Further information

⚠ WARNING

FAILURE, IMPROPER SELECTION OR IMPROPER USE OF THE PRODUCTS AND/OR SYSTEMS DESCRIBED HEREIN OR RELATED ITEMS CAN CAUSE DEATH, PERSONAL INJURY AND PROPERTY DAMAGE.

This document and other information from Parker Hannifin Corporation, its subsidiaries and authorized distributors provide product and/or system options for further investigation by users having technical expertise. It is important that you analyze all aspects of your application and review the information concerning the product or system in the current product catalog. Due to the variety of operating conditions and applications for these products or systems, the user, through its own analysis and testing, is solely responsible for making the final selection of the products and systems and assuring that all performance, safety and warning requirements of the application are met.

The products described herein, including without limitation, product features, specifications, designs, availability and pricing, are subject to change by Parker Hannifin Corporation and its subsidiaries at any time without notice.

Lapped joint tube adaptors (LJ)

Purpose

For applications involving small flanged process valves with simple conversion to instrument lines.

Series LJ



Specification

- 1/2" to 2" N.B. flanges (15 to 50DN).
- 150 to 2500lb flange class.
- Flange sealing:-
  Raised face spiral finish.
- Standard A-LOK® arrangement
  1/4" to 1" O.D. (3mm to 25mm O.D.).
- Standard CPI™ arrangement
  1/4" to 1" O.D. (3mm to 25mm O.D.).
- Standard stainless steel body (316).
- Other materials on application.

Features

- Full heat code traceability to EN10204-3.1
- Integrally machined body, no welding.
- Eliminates additional connections.
- P.T.F.E tape or liquid thread sealants not required.
- Appropriate slipover flanges available.
- NACE MR 0175 / ISO 15156 compliance available on request.

Part number construction

	Product code	Material (refer to table below)	Connection A-LOK maximum size 1" / 25mm	Flange size	Class (to be specified when slipovers required	Optional slipover flanges (SF)
Example 1	LJF	B	8A	8	600	SF
Example 2	LJF	D	M6A	12		

For CPI™ change A to Z.
For A-LOK® size codes use the A-LOK® catalogue.
Example 1: LJFB8A8600SF - Stainless steel, 1/2" O.D. A-LOK® tube connection to 1/2" (DN15) pipe flange, supplied with Class 600 slipover flange.
Example 2: LJFDM6A12 - Monel M400, 6mm O.D. A-LOK® tube connection to 3/4" (DN20) pipe flange.

Flange class must be specified when ordering slipover flange options.

A-LOK®/CPI products in Carbon Steel and Low temp Carbon Steel will be supplied with 316 nuts and ferrules

A-LOK®/CPI products can not be offered in the

Material

A Carbon Steel A105
B Stainless Steel 316
D Monel M400
E Duplex UNS 31803
F Super Duplex UNS S 32750

Flanged Products

Flange to compression connectors (FC)

Purpose

One piece integral connectors allow the user to switch from piping flange standards to instrument compression with minimum cost and added safety. This system eliminates the need for additional connections.

Series FC

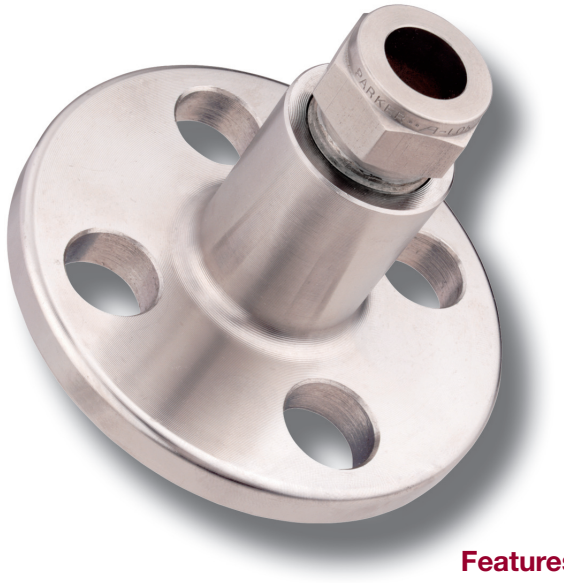

Specification

- 1/2" to 2" N.B. flanges (15 to 50DN).
- 150 to 2500lb flange class.
- Flanges to ANSI B16.5. (others available on request)
- Standard or inverted A-LOK® arrangements 1/4" to 1" O.D. (3mm to 25mm O.D.).
- Standard or inverted CPI™ arrangements 1/4" to 1" O.D. (3mm to 25mm O.D.).
- Flange sealing:-
  Raised face spiral finish.
  Ring type joint.
- Standard stainless steel body (316).
- Other materials on application.

Features

- Full heat code traceability to EN10204-3.1
- Integrally machined body, no welding.
- Eliminates additional connections.
- P.T.F.E tape or liquid thread sealants not required.
- Variety of materials available.
- NACE MR 0175 / ISO 15156 compliance available on request.

Part number construction

	Product code	Material (refer to table page 3)	Connection A-LOK maximum size 1" / 25mm	Flange size	Face style	Class
Example 1	FC	B	8A	16	F	600
Example 2	FC	K	M12A	8	T	1500

For CPI™ change A to Z.
For A-LOK® size codes use the A-LOK® catalogue.

Kidney flanges to compression connectors (KF)

Purpose

Integral A-LOK® twin ferrule connection for simple, easy and safe connection from process measurement impulse line to instrument or manifold

Series KF



Specification

- Rated to 6000psi. Max (depending on connection)
- Standard PTFE seal ring.
- Optional Graphite available.
- Standard stainless steel body (316).
- Standard A-LOK® arrangement 1/4" to 1/2" (3mm to 12mm).
- Standard CPI™ arrangement 1/4" to 1/2" (3mm to 12mm).
- Standard stainless steel body (316).
- Other materials on application.

Features

- High tensile steel bolts standard.
- Full heat code traceability to EN10204-3.1
- 1/2" NB Sch.40 to Sch XXS butt weld connections available.
- Offset threads available.
- Integrally machined body, no welding.
- Eliminates additional connections.
- P.T.F.E tape or liquid thread sealants not required.
- NACE MR 0175 / ISO 15156 compliance available on request.

Part number construction

	Product code	Material (refer to table page 3)	Connection A-LOK maximum size 1/2" / 12mm	Stainless steel bolts optional (SSB)	Graphite option (3)	NACE optional (N)
Example 1	KF	B	8A	–	3	–
Example 2	KF	B	8F	SSB		N

For CPI™ change A to Z.
For A-LOK® size codes use the A-LOK® catalogue.
Example 1: KFB8A3 - Stainless steel, 1/2" O.D. A-LOK® tube connection, graphite sealing ring, 2 carbon steel bolts.
Example 2: KFB8FSSBN - Stainless steel, 1/2" Female NPT thread, P.T.F.E. sealing ring, 2 stainless steel bolts,

Flanged Products

Swivel gauge adaptors

Purpose

Parker's range of swivel gauge adaptors have been designed to privide 360° rotational movement enabling maximum positional orientation of installed gauges and measuring instruments. A fully contained sealing mechanism ensured total system integrity and offers the user up to 10,000 psig (690 barg) working pressure. Silver plated swivel nut thread and bearing area prevent threat galling of stainless steel threads and allow trouble free repeatable re-assembly.



Specification

- 316 Stainless steel standard.
- 1/2" NPT male to 1/2" NPT female standard.
- 6,000 psig (414 barg) maximum pressure rating.
- Maximum temperatre rating 260°C (500°F).
- Fully heat code traceable.
- Height = 66mm (2.60").
- A/F1 = 19mm (3/4").
  A/F2 = 31.8mm (1 1/4").

Options

- Optional BSPP, BSPT & Metric male/female threads, BSPP female DIN 16288 spigot* seal outlet arrangement.

* Note: for washers see CAT 4233 page 72 A-LOK®.

- 10,000 psig (689 barg) optional pressure rating.
- Graphoil packing for high temperature maximum 538°C (1,000°F).
- NACE MR 0175 / ISO 15156 compliance available on request.
- Heat code traceable certification.
- Other materials on application.

Features

- Silver plated swivel thread and bearing surface to prevent thread galling and maximising re-make opportunities.
- Variety of thread options.
- Compact design.
- Fully contained and retained sealing mechanism.

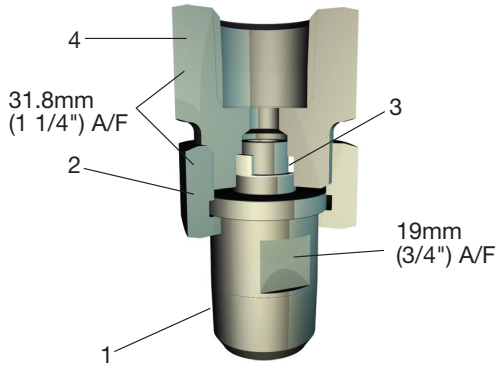

Part description

Item	Description
1	Inlet connector
2	Swivel nut
3	Seal
4	Gauge outlet connector

Part number construction

	Product code	Material (refer to table page 3)	Inlet connection NPT standard	Outlet connection NPT standard	Graphoil option (3)	High pressure option (HP)	NACE optional (N)
Example 1	SG	B	8M	8F	3	HP	–
Example 2	SG	B	6M	8F			N

For male outlet change F to M.
For BSPP suffix M and/or F with R.
For BSPT suffix M and/or F with K.
For DIN 16288 spigot seal suffix F with RDIN

Catalogue 4190-FP-ACC 22/5/07 22:52 Page 7

Parker

The widest range of precision Instrumentation products













The complete range of Manifold catalogues are available in a binder. Order Code 'Manifold/Bin'

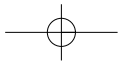

Parker Hannifin Corporation
Instrumentation Products Division
1005 A Cleaner Way
Huntsville, AL 35805
USA
Tel: (256) 881-2040
Fax: (256) 881-5072
www.parker.com/ipdus

Parker Hannifin Ltd.
Instrumentation Products Division
Riverside Road
Pottington Business Park
Barnstaple, Devon EX31 1NP
England
Tel: +44 (0)1271 313131