

AIR MOTORS
SERIES P1VAS, P1V-M, P1V-A

A unique, complete and comprehensive range of air motors
for industrial applications

Parker

Tel: +45 63 12 83 00 | Email: ps@hymatik.com | www.hymatik.com | Hvidkaervej 27a, DK-5250 Odense SV, Denmark

Table of Contents

Advantages of Air Motors 4
Markets and Applications 5
Choosing the correct air motor for your application 6

General Information 7

P1VAS 12
Technical Data 14
120 watts 18
200, 300 watts 20
600, 900 and 1600 watts 22
Lubrication & Service Life 26
Service Kits 26

P1V-M 28
Technical Data 30
Dimensions 200 to 1200 watts 33
200 watts 34
400 watts 36
600 watts 38
900 watts 40
1200 watts 42
Service 45
Lubrication & Service Life 46
Spare Parts 46
Service Kits 47

P1V-A 48
Technical Data 50
Dimensions 60
Planetary Gear 68
Helical (Spur) Gear 70
Worm Gear 74
Lubrication & Service Life 82
Service Kits 82
Order Key 83



If you have questions about the products contained in this catalog, or their applications, please contact:
Parker Hannifin EMEA Sàrl European Headquarters
parker.com/msge

Tel: +45 63 12 83 00 | Email: ps@hymatik.com | www.hymatik.com | Hvidkaervej 27a, DK-5250 Odense SV, Denmark

Features	Air motor	Hydraulic motor	Electric motor
Overload safe	***	***	*
Increased torque at higher loads	***	**	*
Easy to limit torque	***	***	*
Easy to vary speed	***	***	*
Easy to limit power	***	***	*
Reliability	***	***	***
Robustness	***	***	*
Installation cost	***	*	**
Ease of service	***	**	*
Safety in damp environments	***	***	*
Safety in explosive atmospheres	***	***	*
Safety risk with electrical installations	***	***	*
Risk of oil leak	***	*	***
Hydraulic system required	***	*	***
Weight	**	***	*
Power density	**	***	*
High torque for size	**	***	*
Noise level during operation	*	***	**
Total energy consumption	*	**	***
Service interval	*	**	***
Compressor capacity required	*	***	***
Purchase price	*	*	***

Important
Before carrying out service activities, make sure the air motor is vented. Before disassembling the motor, disconnect the primary air hose to ensure that the air supply is interrupted.

Note
All technical data in the catalogue are typical values.
The air quality is a major factor in the service life of the motor, see ISO 8573-1.

WARNING — USER RESPONSIBILITY

FAILURE OR IMPROPER SELECTION OR IMPROPER USE OF THE PRODUCTS DESCRIBED HEREIN OR RELATED ITEMS CAN CAUSE DEATH, PERSONAL INJURY AND PROPERTY DAMAGE.

- This document and other information from Parker-Hannifin Corporation, its subsidiaries and authorized distributors provide product or system options for further investigation by users having technical expertise.
- The user, through its own analysis and testing, is solely responsible for making the final selection of the system and components and assuring that all performance, endurance, maintenance, safety and warning requirements of the application are met. The user must analyze all aspects of the application, follow applicable industry standards, and follow the information concerning the product in the current product catalog and in any other materials provided from Parker or its subsidiaries or authorized distributors.
- To the extent that Parker or its subsidiaries or authorized distributors provide component or system options based upon data or specifications provided by the user, the user is responsible for determining that such data and specifications are suitable and sufficient for all applications and reasonably foreseeable uses of the components or systems.

SALE CONDITIONS

The items described in this document are available for sale by Parker Hannifin Corporation, its subsidiaries or its authorized distributors. Any sale contract entered into by Parker will be governed by the provisions stated in Parker's standard terms and conditions of sale (copy available upon request).

Tel: +45 63 12 83 00 | Email: ps@hymatik.com | www.hymatik.com | Hvidkaervej 27a, DK-5250 Odense SV, Denmark

ADVANTAGES OF AIR MOTORS

Air motors are safe and robust drive systems, which come into play when a high performance and overload safe drive is required. Always ready for action long after traditional drive technology has stopped spinning!



P1V Series

M S A

Safe
for use in potentially explosive environments



P1V Series

M S A

Sealed
even for underwater usage



P1V Series

M S A

Insensitive to acids



P1V Series

M S A

Sterilisable
for repeated use in clean-rooms



P1V Series

M S A

Resistant to cleaning agents
and suitable for the high standards of the food processing industry



P1V Series

M S A

Light and compact
only 1/5 of the weight and 1/3 of the size of an electric motor of equivalent power



P1V Series

M S A

Insensitive to vibrations



P1V Series

M S A

Insensitive to heat



P1V Series

M S A

Insensitive to dust



P1V Series

M S A

Overload safe
can be loaded to stand still with no damages

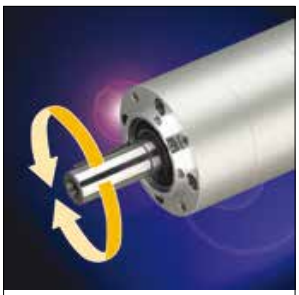

P1V Series

M S A

Reversible
can be set in both rotational directions



P1V Series

M S A

Easy to control
smoothly controlled by altering the pressure or air quantity (throttling)

Tel: +45 63 12 83 00 | Email: ps@hymatik.com | www.hymatik.com | Hvidkaervej 27a, DK-5250 Odense SV, Denmark

MARKETS AND APPLICATIONS

Today as ever, air motors are of utmost importance as a drive element for machines and equipment. As market leader in this field we provide an extremely versatile program for the most varied of applications from the food industry to medical technology. Diverse design models, simple construction, light performance weight, high speed ranges and explosion safety, this ensures that air motors can be used in a wide spectrum of applications. Air vane motors are employed in almost all sectors of industry.

Medical and pharmaceutical industry

- sterilisable
- light – small
- high performance
- reliable
- long life-span
- oil-free operable easy maintenance
- See P1VAS Series



Food processing industry

- food industry conform
- sealed
- resistant to cleaning agents
- oil-free operable
- highest reliability
- See P1VAS Series



Ship building, underwater usage

- ATEX conform
- high performance
- robust
- easy maintenance
- See P1VAS Series



Paper industry

- stainless steel design
- high performance
- reliable
- long life-span
- easy maintenance
- See P1V-A Series



Foundries, iron works and power plants

- ATEX conform
- high performance
- long life-span
- easy maintenance
- robust
- See P1V-A Series



Machine construction

- non-corrosive
- insensitive to vibrations
- ATEX conform
- robust
- easy maintenance
- See P1V-M Series



Chemical industry

- ATEX conform
- resistant to cleaning agents
- insensitive to acids
- high performance
- long life-span
- easy maintenance
- See P1VAS & M Series

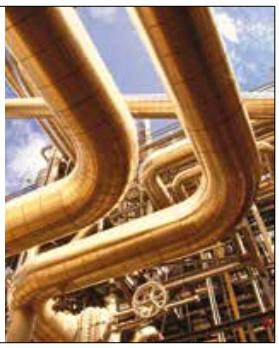

Automobile industry

- ATEX conform
- high performance
- long life-span
- easy maintenance
- robust
- See P1V-M & Air Tooling Series



Tel: +45 63 12 83 00 | Email: ps@hymatik.com | www.hymatik.com | Hvidkaervej 27a, DK-5250 Odense SV, Denmark

CHOOSING THE CORRECT AIR MOTOR FOR YOUR APPLICATION

1 Which drive principle of the air motor is suitable for your application?

- Air vane motors are suitable for regular operating cycles, speed is very slow e. g. 16 rpm
- Tooth gear air motors or turbines are more suitable for continuous operation, 24 hours non-stop, speed is in a upper range, up to 140,000 rpm
- Oil free operation is often an option for these three principles of air motors.

2 Which motor materials are suitable for your application?

- Will the air motor work in a normal production area?
- Or in a paper industry?
- Or in the food processing industry, in contact or not with food?
- Or in underwater usage?
- Or in the medical, pharmaceutical industries?
- Or in potentially explosive areas?
- For other environments what else do you need to take into account?

3 How do you calculate the motor power, taking the application conditions into consideration?

1. Which rotational direction? Clockwise, anti-clockwise, reversible?
2. Air pressure working range? Which air class quality is available?
3. Which torque and which speed under load do you expect to obtain?
4. Calculate the basic power with the formula
   P = M x n / 9550 with P power output in kW, M nominal torque in Nm, n nominal speed in rpm
5. Check performance data of air motors in our catalogues. Note that all data is at 6 bar in the inlet of the air motor, max 3 meters for tubes and oil lubricated operations.
6. To adapt the difference of air pressure with your operation conditions, please check graphs in our catalogues and how to do it.
7. Or you can adapt the need of air to fit your operation conditions by throttling the outlet flow in the air motor you will reduce speed without loss of torque.
8. Check if you need an oil free or not working operation. 1 to 2 drops of oil per cube meter are needed to optimize performance and life time of air motors. Oil free operation will decrease by 10 to 15 % the performance of air motors.

4 How do you integrate your air motor in your system?

- In which position is the air motor used?
- Do you need to use a brake?
- Do you want to use your own gear box and put it somewhere else in the machine?
- Do you need extra components like fittings, tubes, valves and FRLs?

5 How do you ensure a long life and high performance of the air motor?

- Ensure you air quality is in accordance with our specifications, oil or oil free lubrication operations.
- Keep the recommended maintenance intervals

6 How do you determine the purchasing and running costs after the air motor installation?

-Keep same level of your air quality.

Tel: +45 63 12 83 00 | Email: ps@hymatik.com | www.hymatik.com | Hvidkaervej 27a, DK-5250 Odense SV, Denmark

GENERAL INFORMATION

Principles of motor functioning

There are a number of air motor designs, Parker has chosen the vane rotor design due to its simplicity and reliable operation. Plus the small external dimensions of vane motors make them suitable for all applications.

The principle of the vane motor is that a rotor with a number of vanes is enclosed in a rotor cylinder. Compressed air is supplied through one connection and air escapes from the other.

For reliable starting, the springs press the vanes against the rotor cylinder and the air pressure always bears at right angles against a surface. This means that the resulting torque of the motor is due to the vane surfaces and the air pressure.

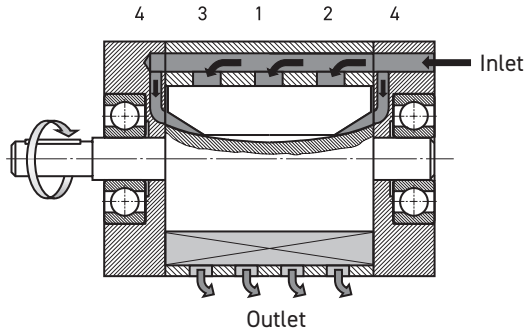

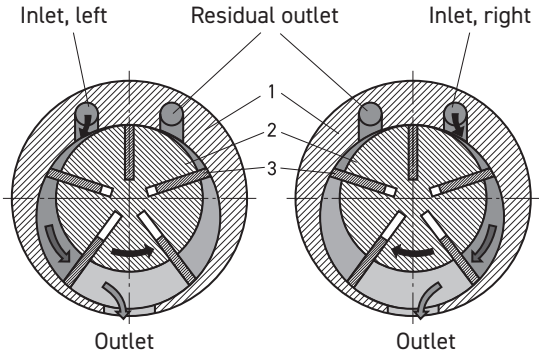

1 Rotor cylinder
2 Rotor
3 Vanes
4 End piece with bearing

Torque, power and air consumption Graphs

The performance characteristics of each motor are shown in a family of curves as above, from which torque, power and air consumption can be read off as a function of speed. Power is zero when the motor is stationary and also when running at free speed (100%) with no load. Maximum power (100%) is normally developed when the motor is driving a load at approximately half the free speed (50%).

Torque at free speed is zero, but increases as soon as a load is applied, rising linearly until the motor stalls. As the motor can then stop with the vanes in various positions, it is not possible to specify an exact torque. However, a minimum starting torque is shown in all tables. Air consumption is greatest at free speed, and decreases with decreasing speed, as shown in the above diagram.

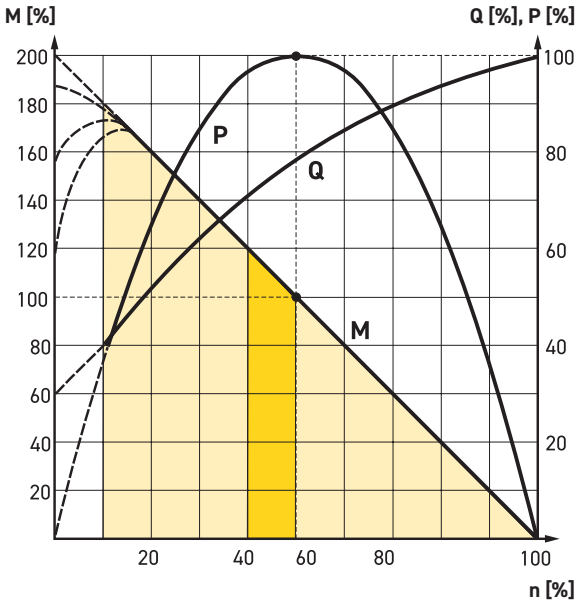

The curve is for 6 bar
P = power **Q = air consumption**
M = torque **n = speed**

Possible working range of motor.

Optimum working range of motor.

Higher speeds = more vane wear
Lower speeds with high torque = more gearbox wear

Tel: +45 63 12 83 00 | Email: ps@hymatik.com | www.hymatik.com | Hvidkaervej 27a, DK-5250 Odense SV, Denmark

Performance

The performance of an air motor is dependent on the inlet pressure. At a constant inlet pressure, air motors exhibit the characteristic linear output torque / speed relationship. However, by simply regulating the air supply, using the techniques of throttling or pressure regulation, the output of an air motor can easily be modified. The most economical operation of an air motor (least wear, least air consumption, etc.) is reached by running close to nominal speed. By torque of M = 0, the maximum speed (idle speed) is reached. Shortly before standstill (n - 0), the air motor reaches its maximum torque (Mmax = 2 x Mo). At nominal speed (nn), for example in the middle of the speed range, air motor reaches its maximum power output (Pmax).

Energy Efficiency

A pneumatic motor achieves its maximum power when it is operating as close as possible to its rated speed (50% of the rated idle speed). The energy balance is best in this area, because the compressed air is used efficiently.

Air pressure correction factors

To adapt the difference of air pressure with your operation conditions.tor.

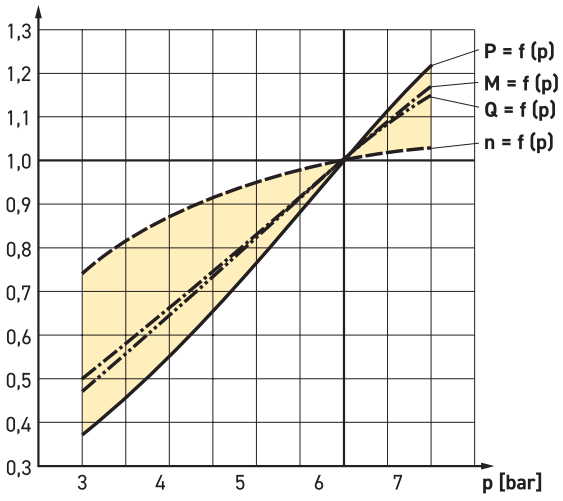

P = Power, M = Torque, Q = Air consumption, N = Speed

All catalogue data and curves are specified at a supply pressure of 6 bar to the motor. This diagram shows the effect of pressure on speed, specified torque, power and air consumption.

Start off on the curve at the pressure used and then look up to the lines for power, torque and air consumption. Read off the correction factor on the Y axis for each curve and multiply this by the specified catalogue data in the table, or data read from the torque and power graphs.

Pressure [p] bar / PSI	Power [P] %	Speed [n] %	Torque [M] %	Air Consump. [Q] %
7/99	121	103	117	117
6/85	100	100	100	100
5/71	77	95	83	83
4/57	55	87	67	67
3/42	37	74	50	50

Example: at 4 bar supply pressure, the power is only 0.55 x power at 6 bar supply pressure. This example shows how strongly power falls if supply pressure is reduced. You must therefore ensure that the motor is supplied through pipes of sufficient diameter to avoid pressure drop.

The speed and torque can also be regulated by installing a pressure regulator in the inlet pipe. This means that the motor is constantly supplied with air at lower pressure, which means that when the motor is braked, it develops a lower torque on the output shaft.

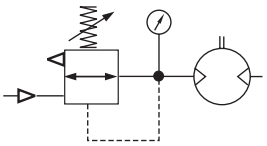

Pressure regulation at motor inlet.

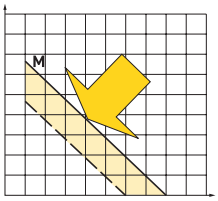

Theoretically torque curve change caused by pressure change

Speed regulation, air flow reduction

Every size reduction or restriction on the air line, whether of the supply hose itself or fittings, before the air motor affects the amount of the supplied air. By throttling you reduce the speed of your motor and simultaneously, the required torque. That means that you reduce the motor performance.

The most common way to reduce the speed of a motor is to install a flow control valve in the air outlet, you can set the speed without loss of the torque. When the motor is used in applications where it must reverse and it is necessary to restrict the speed in both directions, flow control valves with by-pass should be used in both directions. If the inlet air is restricted, the air supply is restricted and the free speed of the motor falls, but there is full pressure on the vanes at low speeds. This means that we get full torque from the motor at low speeds despite the low air flow. Since the torque curve becomes “steeper”. this also means that we get a lower torque at any given speed than would be developed at full air flow. The benefit of throttling the inlet is that air consumption is reduced, whereas throttling the exhaust air maintains a slightly higher starting torque.

Tel: +45 63 12 83 00 | Email: ps@hymatik.com | www.hymatik.com | Hvidkaervej 27a, DK-5250 Odense SV, Denmark

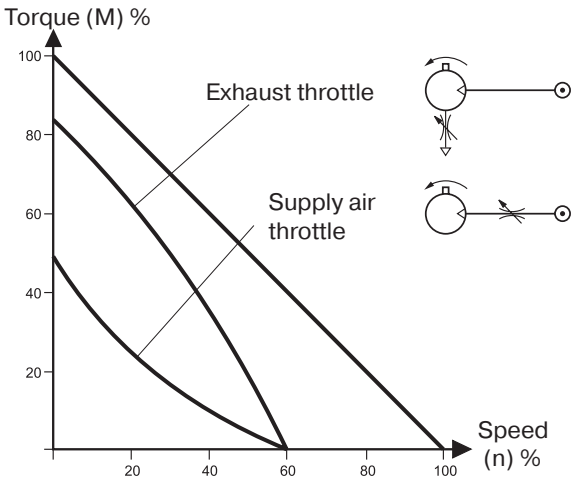

Throttling

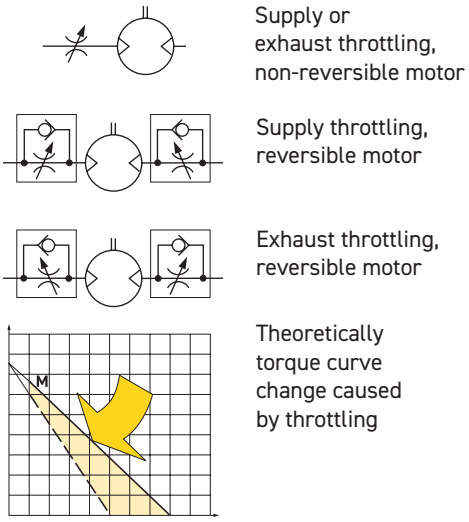

Supply or exhaust throttling, non-reversible motor

Supply throttling, reversible motor

Exhaust throttling, reversible motor

Theoretically torque curve change caused by throttling

Direction of motor rotation

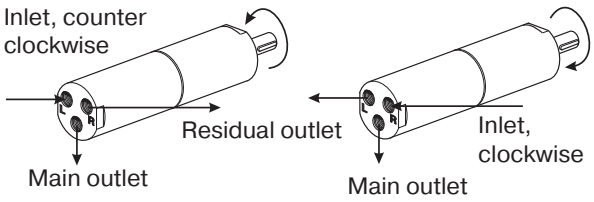

The direction of rotation of reversible motors is controlled by supplying inlet L or inlet R with compressed air. Air motors can be stopped and started continually without damage.

As the motor begins to rotate air is trapped between the vanes and is compressed. This air is exhausted through the exhaust port. As the rotor continues it's rotation, trapped air is compressed and exhausted through the residual port. If this air is not exhausted, the motor will be braked and maximum power will not be obtained.

Compressed air quality

Oil and oil mist are avoided whenever possible to ensure a clean work environment. In addition, purchasing, installation and maintenance of oil equipment can be expensive. All users in all industries now try to avoid using components which have to be lubricated. The P1V air motors series are equipped with vanes for intermittent lubrication free operation as standard, which is the most common application of air motors.

Dry unlubricated compressed air

If unlubricated compressed air is used, the compressed air should comply with the purity standards below in order to guarantee the longest possible overall service life. If the unlubricated compressed air has a high water content, condensation forms inside the motor, causing corrosion in all internal components. A ball bearing can be destroyed in a remarkably short time if it comes into contact with a single water droplet. For indoor use, we recommend ISO8573-1 purity class 3.4.1. To achieve this, compressors must befitted with after coolers, oil filters, refrigerant air dryers and air filters. For indoor/outdoor use, we recommend ISO8573-1 purity class 1.2.1. To achieve this, compressors must be fitted with after coolers, oil filters, adsorption dryers and dust filters.

Oil mist

If oil mist is used (approx. 1 drop of oil per m3 of compressed air), the oil not only acts as a lubricant but also protects against corrosion. This means that compressed air with a certain water content may be used without causing corrosion problems inside the motor. ISO8573-1 purity class 3.-.5 may be used without difficulty. The following oils are recommended for use in the food stuffs industry: Shell Cassida Fluid HF 32 or Klüberoil 4 UH 1-32.

ISO 8573-1 purity classes

Quality class	Contaminants		Water	Oil
	particle size (µm)	max. concentration (mg/m³)	max pressure dew point (°C)	max concentration (mg/m³)
1	0.1	0.1	-70	0.01
2	1	1	-40	0.1
3	5	5	-20	1.0
4	15	8	+3	5.0
5	40	10	+7	25
6	-	-	+10	-

For example: compressed air to purity class 3.4.3. This means a 5 µm filter (standard filter), dew point +3°C (refrigerant cooled) and an oil concentration of 1,0 mg oil/m3 (as supplied by a standard compressor with a standard filter).

Tel: +45 63 12 83 00 | Email: ps@hymatik.com | www.hymatik.com | Hvidkaervej 27a, DK-5250 Odense SV, Denmark

Air supply

Since the supply pressure at the air motor inlet port is of considerable importance for obtaining the power, speed and torque quoted in the catalogue, the recommendations below should be observed.

The following data must be complied with:

- Supply pressure: 7 bar
- Regulator pressure setting: 6.7 bar
- Pipe length between air treatment unit and valve: max. 1 m
- Pipe length valve and air motor: max 2 m

The pressure drop through the air preparation unit, pipe, valve means that 6 bar pressure is obtained at the motor supply port. Please refer to the correction diagram and factors to see what lower supply pressure means for power, speed and torque.

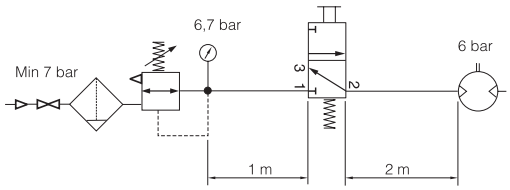

Shut-off, filtering, pressure regulation and control valve

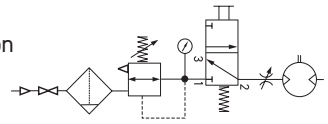

Reversible motor with 5/3 control valve

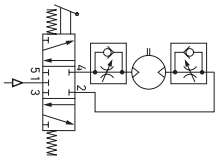

Reversible motor with two 3/2 control valves

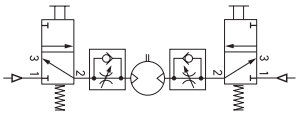

The air with which the motor is supplied must be filtered and regulated. Directional valves are needed to provide it with air, to get the motor to rotate when we want it to. These valves can be equipped with several means of actuation, such as electric, manual and pneumatic control. When the motor is used in a non-reversible application, it is sufficient to use a 2/2 or 3/2 valve function for supply. Either one 5/3 or two 3/2 valves functions are needed for a reversible motor, to ensure that the motor receives compressed air and the residual air outlet is vented. A flow control valve can be installed in the supply pipe to regulate the motor speed if the motor is not used as a reversible motor. One flow control valve with by-pass is needed to regulate each direction of rotation if the motor is used as a reversible motor. The built-in check valve will then allow air from the residual air outlet to escape through the outlet port in the control valve. The compressed air supply must have sufficiently large pipes and valves to give the motor the maximum power. The motor needs 6 bar at the supply port all the time. For example, a reduction of pressure to 5 bar reduces the power developed to 77% and to 55% at 4 bar!

Silencing

Exhaust silencer

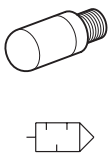

Central silencer

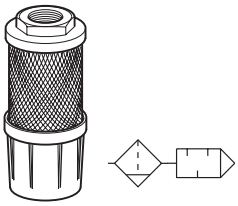

The noise from an air motor consists of both mechanical noise and a pulsating noise from the air flowing out of the outlet. The installation of the motor has a considerable effect on mechanical noise. It should be installed so that no mechanical resonance effects can occur. The outlet air creates a noise level which can amount to 115 dB(A) if the air is allowed to exhaust freely into the atmosphere. Various types of exhaust silencers are used to reduce this level. The most common type screws directly onto the exhaust port of the motor. Since the motor function causes the exhaust air to pulsate, it is a good idea to allow the air to exhaust into some kind of chamber first, which reduces the pulsations before they reach the silencer. The best silencing method is to connect a soft plastic hose to a large central silencer with the largest possible area, to reduce the speed of the outflowing air as far as possible.

NOTE! Remember that if a silencer which is too small or is blocked, generates back pressure on the outlet side of the motor, which reduces the motor power.

CE marking

The air motors are supplied as "Components for installation" – the installer is responsible for ensuring that the motors are installed safely in the overall system. Parker Pneumatic guarantees that its products are safe, and as a supplier of pneumatic equipment we ensure that the equipment is designed and manufactured in accordance with the applicable EU directive.
Most of our products are classed as components as defined by various directives, and although we guarantee that the components satisfy the fundamental safety requirements of the directives to the extent that they are our responsibility, they do not usually carry the CE mark. Nevertheless, most P1VAS motors carry the CE mark because they are ATEX certified (for use in explosive atmospheres).

The following are the currently applicable directives:

- Machinery Directive(essential health and safety requirements relating to the design and structure of machines and safety components)
- EMC Directive
- Simple Pressure Vessels Directive
- Low Voltage Directive
- ATEX Directive (ATEX = ATmosphere EXplosive)

Tel: +45 63 12 83 00 | Email: ps@hymatik.com | www.hymatik.com | Hvidkaervej 27a, DK-5250 Odense SV, Denmark

Torque, power and air consumption graphs

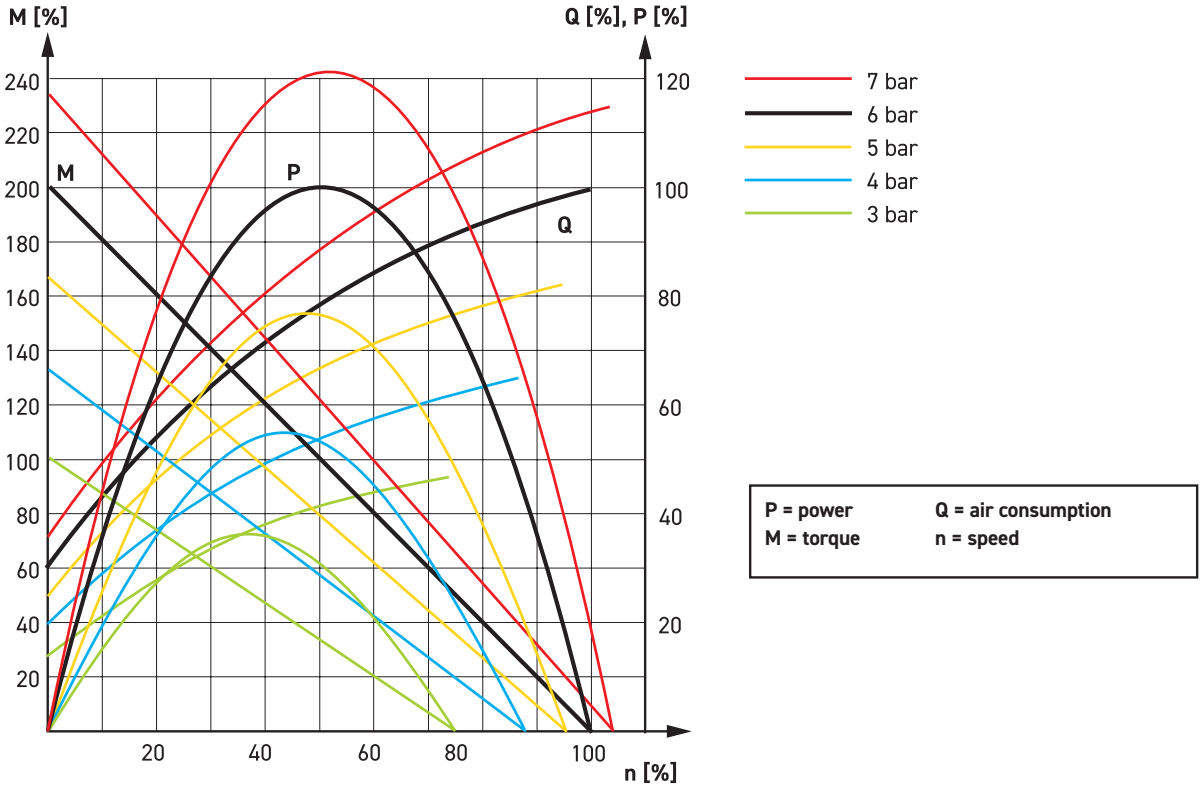

Selecting the right motor

The motor to be used should be selected by starting with the torque needed at a specific spindle speed. In other words, to choose the right motor, you have to know the required speed and torque. Since maximum power is reached at half the motor's free speed, the motor should be chosen so that the point aimed at is as close as possible to the maximum power of the motor.

The design principle of the motor means that higher torque is generated when it is braked, which tends to increase the speed. This means that the motor has a kind of speed selfregulation function built in. Use the following graph to choose the correct motor size and the correct type of gear as appropriate. The graph contains the points for the maximum torque of each motor at maximum power. Put in your point on the graph and select a marked point above and to the right of the point you need.

The curves in this graph are a combination of the torque, power and air consumption graphs. The values from the correction diagram have also been used for the curves for the different pressure values. The graph also shows that is it very important to ensure that the pressure supplied to the inlet port of the motor is correct, in order to allow the motor to work at maximum capacity. If the valve supplying a large motor is too small or if the supply line is underspecified, the pressure at the inlet port may be so low that the motor is unable to do its work. One solution would be to upgrade the valve and supply system, or alternatively you could replace the motor with a smaller motor with lower air consumption. The result would be increased pressure at the inlet port, which means that the smaller motor could carry out the necessary work. However, you may need to select a smaller motor with a lower free speed in order to obtain sufficient torque at the outgoing shaft.

Then check the characteristic graph of each motor to find more accurate technical data. Always select a motor where the data required is in the orange field. Also use the correction diagram to see what it would mean to use different air supply pressures or different air flow in the motor.

Tip: Select a motor which is slightly too fast and powerful, regulate its speed and torque with a pressure regulator and/or restriction to achieve the optimum working point.

Do you need any support to select the right air motor, please feel free to consult your local sales office.

Tel: +45 63 12 83 00 | Email: ps@hymatik.com | www.hymatik.com | Hvidkaervej 27a, DK-5250 Odense SV, Denmark

P1VAS SERIES STAINLESS STEEL

Contents Page

General 13
Technical data 14
Material and technical specification 14
Choices of vanes 15
ATEX classes 15
Optimum working speed and torque range 16

Stainless Steel Air Motors 120 to 1600 watts
Reversible air motor 120 watts 18
Dimensions 120 watts 19
Reversible air motor 200 and 300 watts 20
Dimensions 200, 300 watts 21
Reversible air motor 600, 900 & 1600 watts 22
Dimensions 600 watts 23
Dimensions 900 watts 24
Dimensions 1600 watts 25
Lubrication and service life 26
Service kits 26



Tel: +45 63 12 83 00 | Email: ps@hymatik.com | www.hymatik.com | Hvidkaervej 27a, DK-5250 Odense SV, Denmark

Stainless Steel Air Motors

P1VAS is a range of air motors with all external components made of stainless steel, which means that they can be used in food grade applications, and in all other applications where there is a risk of corrosion.

The range contains seven different sizes, with power ranging from 20 to 1 200 Watts, and speeds from 5 to 24 000 rpm. The air motor and planetary reduction gear are built into a polished stainless steel housing, which is sealed by a fluorocarbon rubber O-ring. The output shaft, which is made of polished stainless steel, is also sealed by a fluorocarbon rubber seal.

Consideration for achieving a clean, hygienic design was given early on in the development of this range of air motors. Thanks to the cylindrical shape, there are no pockets which can accumulate dirt or bacteria.

Additionally, the two halves of the motor body are sealed with an o-ring to prevent contamination. The choice of materials reflects the fact that aggressive cleaning materials are used in food grade applications.

The P1VAS series is designed to be operated in intermittent intervals under non-lubrication conditions. For this reason, no particles of lubricant escape with the exhaust air and the service costs are reduced. This means that the motors can be used directly in food grade applications. The planetary gear, which has one or more reduction stages, is lubricated with an USDA-H1 standard grease, approved for use in food grade applications.

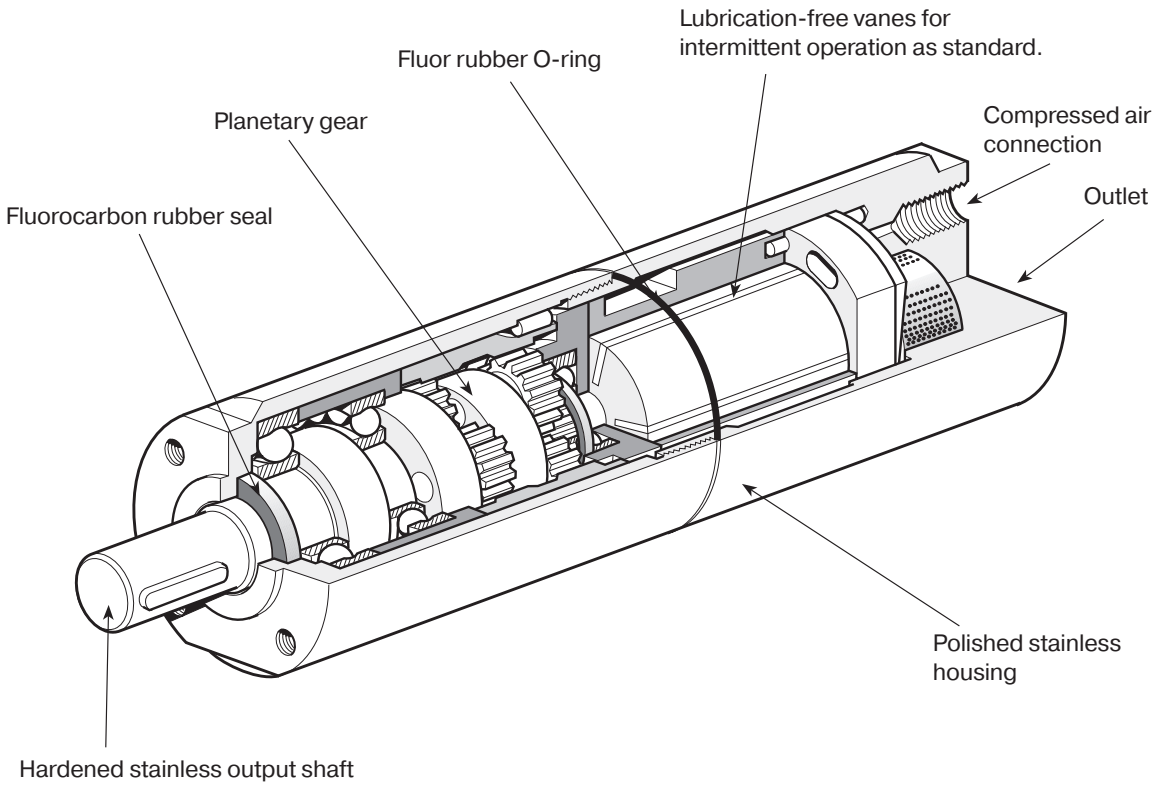

Tel: +45 63 12 83 00 | Email: ps@hymatik.com | www.hymatik.com | Hvidkaervej 27a, DK-5250 Odense SV, Denmark

TECHNICAL DATA

Air motor size & type	P1VAS 012	P1VAS 020	P1VAS 030	P1VAS 060	P1VAS 090	P1VAS 160
Nominal power (watts)	120	200	300	600	900	1600
Working pressure (bar)	3 to 7, 6 in explosive atmosphere					
Working temperature (°C)	-20 to +110					
Ambient temperature (°C)	-20 to +40 in explosive atmosphere					
Air flow required (Nl/min)	300	370	470	850	1400	1600
Min pipe ID, inlet (mm)	6	10	10	12	12	19
Min pipe ID, outlet (mm)	6	10	10	12	12	19
Choice of treatment unit: recommended min air flow (l/min) at p1 7.5 bar and 0.8 bar pressure drop						
	340	410	510	900	1500	1800
Medium	40 µm filtered, oil mist or dry unlubricated compressed air					
Oil free operation, indoor	ISO8573-1 purity class 3.4.1					
Oil free operation, outdoor	ISO8573-1 purity class 1.2.1					
Oil operation	1-2 drop per cube meter, ISO8573-1 purity class 3.-.5					
Recommended oil	Foodstuffs industry Klüber oil 4 UH1- 32 N					
Choice of valve: recommended min nominal air flow (l/min) at p1 6 bar and 1 bar pressure drop						
	380	450	550	950	1600	2000
Sound level free outlet (dB(A))	99	100	103	103	106	108
With outlet silencer (dB(A))	92	82	91	94	88	95
Exhaust air removed with pipes to another room	70	71	70	76	80	87

Note: sound levels are measured at free speed with the measuring instrument positioned 1 meter away from the air motor at an height of 1 meter.

Material specification

Air motor size & type	P1VAS 012	P1VAS 020	P1VAS 030	P1VAS 060	P1VAS 090	P1VAS 160
Planetary gearbox housing	Stainless steel					
Air motor housing	Stainless steel					
Shaft	Hardened stainless steel					
Key	Hardened stainless steel					
External seal Fluor rubber	Fluor rubber FPM					
Internal steel parts	High grade steel (not stainless)					
Planetary gear grease used in	Grease, Shell Cassida RLS2					
Screws in housing in last planet stage	Surface treated steel					
Accessories	**P1V**					
Flange bracket	Stainless steel					
Foot bracket	Stainless steel					
Screws for the mountings	Stainless steel DIN A2					

Tel: +45 63 12 83 00 | Email: ps@hymatik.com | www.hymatik.com | Hvidkaervej 27a, DK-5250 Odense SV, Denmark

Choice of vanes

0 = Standard vanes
These motors are for the vane type for intermittent lubrication-free operation. They can operate 70 % of the time for up to 15 minutes without lubrication. With lubrication, these motors can operate 100 % of the time.

C = Vanes for continuous l ubricationfree operation
This motor is equipped with vanes for continuous lubrication-free operation. (To obtain the longest possible service life, we recommend no oil in the air.)

Z = Standard spring loaded vanes
All vanes are spring loaded to ensure that they remain pressed against the cylinder when the motor stops. The spring loaded vane option also prevents the vanes from sliding down in their track if vibration is introduced.
The spring loaded vanes therefore provide a higher starting torque, improved starting and low speed characteristics, because the leakage over the vanes is reduced to a minimum.

Refer to the digit 10 in the part number for ordering vanes with option C or Z, 0 is standard.

ATEX Classes

T6 | T80°C	II 2G Ex h IIC T6 Gb X II 2D Ex h IIIC T80°C Db X
T5 | 95°C	II 2G Ex h IIC T5 Gb X II 2D Ex h IIIC T95°C Db X
T4 | T130°C	II 2G Ex h IIC T4 Gb X II 2D Ex h IIIC T130°C Db X
T3 | T195°C	II 2G Ex h IIC T3 Gb X II 2D Ex h IIIC T195°C Db X

Refer to the chart for each air motor part number in next pages for ATEX classes.

Tel: +45 63 12 83 00 | Email: ps@hymatik.com | www.hymatik.com | Hvidkaervej 27a, DK-5250 Odense SV, Denmark

Optimum working speed and torque range

"The performance characteristics of each motor are normally shown in a family of curves, from which torque, power and air consumption can be read off as a function of speed. Power is zero when the motor is stationary and also when running at free speed (100%) with no load. Maximum power (100 %) is normally developed when the motor is driving a load at approximately half the free speed (50 %). Torque at free speed is zero, but increases as soon as a load is applied, rising linearly until the motor stalls. As the motor can then stop with the vanes in various positions, it is not possible to specify an exact torque. However, a minimum starting torque is shown in all tables in next pages for each air motor size. Air consumption is greatest at free speed, and decreases with decreasing speed."

Order Code	Speed reange [rpm]	Torque range [Nm]
P1VAS012A*N00	8800 to 11000	0.12 to 0.1
P1VAS012A*550	2200 to 2750	0.46 to 0.4
P1VAS012A*360	1440 to 1800	0.69 to 0.6
P1VAS012A*140	560 to 700	1.84 to 1.6
P1VAS012A*090	360 to 450	2.88 to 2.5
P1VAS012A*060	240 to 300	4.37 to 3.8
P1VAS012A*010	-	-
P1VAS020A*G00	6400 to 8000	0.28 to 0.24
P1VAS020A*460	1840 to 2300	0.92 to 0.8
P1VAS020A*240	960 to 1200	1.84 to 1.6
P1VAS020A*140	560 to 700	3.11 to 2.7
P1VAS020A*070	280 to 350	6.21 to 5.4
P1VAS020A*036	144 to 180	12.19 to 10.6
P1VAS020A*018	72 to 90	12.08 to 10.5
P1VAS020A*005	-	-
P1VAS030A*E50	5800 to 7250	0.46 to 0.4
P1VAS030A*460	1840 to 2300	1.38 to 1.2
P1VAS030A*240	960 to 1200	2.76 to 2.4
P1VAS030A*123	492 to 615	5.35 to 4.65
P1VAS030A*070	280 to 350	9.37 to 8.15
P1VAS030A*036	144 to 180	18.29 to 15.9
P1VAS030A*018	72 to 90	15.87 to 13.8
P1VAS030A*010	-	-
P1VAS030A*005	-	-
P1VAS060A*D50	5400 to 6750	0.98 to 0.85
P1VAS060A*550	2200 to 2750	2.3 to 2
P1VAS060A*400	1600 to 2000	3.22 to 2.8
P1VAS060A*300	1200 to 1500	4.37 to 3.8
P1VAS060A*200	800 to 1000	6.56 to 5.7
P1VAS060A*070	280 to 350	18.75 to 16.3
P1VAS060A*050	200 to 250	26.34 to 22.9
P1VAS060A*034	136 to 170	38.76 to 33.7
P1VAS060A*018	72 to 90	36.57 to 31.8
P1VAS090A*C60	5040 to 6300	1.55 to 1.35
P1VAS090A*520	2080 to 2600	3.8 to 3.3
P1VAS090A*367	1468 to 1835	5.29 to 4.6
P1VAS090A*285	1140 to 1425	6.9 to 6
P1VAS090A*190	760 to 950	10.35 to 9
P1VAS090A*065	260 to 325	30.36 to 26.4
P1VAS090A*047	188 to 235	41.98 to 36.5
P1VAS090A*031	124 to 155	63.71 to 55.4
P1VAS160A*960	3840 to 4800	3.57 to 3.1
P1VAS160A*250	1000 to 1250	14.03 to 12.2
P1VAS160A*120	480 to 600	29.21 to 25.4
P1VAS160A*070	280 to 350	50.14 to 43.6
P1VAS160A*032	128 to 160	109.71 to 95.4
P1VAS160A*020	80 to 100	76.94 to 66.9
P1VAS160A*016	64 to 80	219.65 to 191

* valid for vanes 0, C, Z.

Tel: +45 63 12 83 00 | Email: ps@hymatik.com | www.hymatik.com | Hvidkaervej 27a, DK-5250 Odense SV, Denmark

Tel: +45 63 12 83 00 | Email: ps@hymatik.com | www.hymatik.com | Hvidkaervej 27a, DK-5250 Odense SV, Denmark

P1VAS Stainless Steel Vane Air Motors with Integrated Planetary Gear boxes

Note: All technical data are based on a working pressure of 6 bar and with oil lubrification. With oil free operation performances are reduced by 10 to 20 %. Speed tolerance accuracy in between clock and anti clockwise directions is ±10%.

Note! Inlet and exhaust air flows are critical for reaching the best performances.

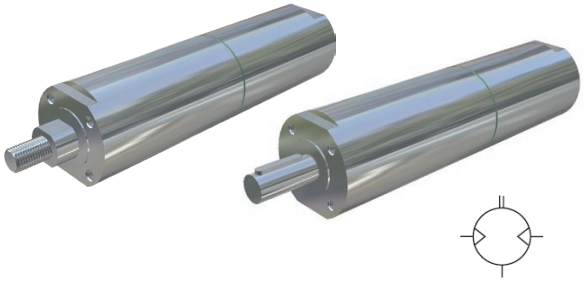

Data for Reversible Air Motor Power 120 watts, with Keyed Shaft

Max power	Free speed	Nominal speed	Nominal torque	Min starting torque	Stall torque	Max adm torque	Air consumption	Supply/ Exhaust	Min pipe	Weight	ATEX	Rotation	Vanne Option	Order Code
[watt]	[rpm]	[rpm]		[Nm]	[Nm]	[Nm]	[m³/min]		[mm]	[kg]				
120	22000	11000	0.10	0.15	0.19	*	0.30	G1/8 | G1/8	6 | 6	0.35	T6 | T80°C	L & R	0. C. Z	**P1VAS012A0N00**
120	5500	2750	0.40	0.60	0.76	*	0.30	G1/8 | G1/8	6 | 6	0.35	T4 | T130°C	L & R	0. C. Z	**P1VAS012A0550**
120	3600	1800	0.60	0.90	1.14	*	0.30	G1/8 | G1/8	6 | 6	0.35	T4 | T130°C	L & R	0. C. Z	**P1VAS012A0360**
120	1400	700	1.60	2.40	3.00	*	0.30	G1/8 | G1/8	6 | 6	0.40	T4 | T130°C	L & R	0. C. Z	**P1VAS012A0140**
120	900	450	2.50	3.80	4.70	*	0.30	G1/8 | G1/8	6 | 6	0.40	T6 | T80°C	L & R	0. C. Z	**P1VAS012A0090**
120	600	300	3.80	**	**	5	0.30	G1/8 | G1/8	6 | 6	0.40	T6 | T80°C	L & R	0. C. Z	**P1VAS012A0060**
120	100	**	**	**	**	5	0.30	G1/8 | G1/8	6 | 6	0.45	T6 | T80°C	L & R	0. C. Z	**P1VAS012A0010**

Data for Reversible Air Motor Power 120 watts, with Threaded Shaft

Max power	Free speed	Nominal speed	Nominal torque	Min starting torque	Stall torque	Max-adm torque	Air consumption	Supply/ Exhaust	Min pipe	Weight	ATEX	Rotation	Vanne Option	Order Code
[watt]	[rpm]	[rpm]		[Nm]	[Nm]	[Nm]	[m³/min]		[mm]	[kg]				
120	22000	11000	0.10	0.15	0.19	*	0.30	G1/8 | G1/8	6 | 6	0.35	T6 | T80°C	-	0. C. Z	**P1VAS-012D0N00**
120	5500	2750	0.40	0.60	0.76	*	0.30	G1/8 | G1/8	6 | 6	0.35	T4 | T130°C	-	0. C. Z	**P1VAS012D0550**
120	3600	1800	0.60	0.90	1.14	*	0.30	G1/8 | G1/8	6 | 6	0.35	T4 | T130°C	-	0. C. Z	**P1VAS012D0360**
120	1400	700	1.60	2.40	3.00	*	0.30	G1/8 | G1/8	6 | 6	0.40	T4 | T130°C	-	0. C. Z	**P1VAS012D0140**
120	900	450	2.50	3.80	4.70	*	0.30	G1/8 | G1/8	6 | 6	0.40	T6 | T80°C	-	0. C. Z	**P1VAS012D0090**
120	600	300	3.80	**	**	5	0.30	G1/8 | G1/8	6 | 6	0.40	T6 | T80°C	-	0. C. Z	**P1VAS012D0060**
120	**100**	**	**	**	**	**5**	0.30	G1/8 | G1/8	6 | 6	0.45	T6 | T80°C	-	0. C. Z	**P1VAS012D0010**

Max. adm torque is restriction from the gear box Details on page 16.

Note:

air motor rotation with threaded shaft may be reversed, but when operated anticlockwise, there is a risk that the driven unit may disconnect if it is not locked properly.
* Maximum admissible torque

No values as these motors can not achieve the maximum gear box torque. Stall torque is the max they can achieve.

The motor P1VAS012A0060 has no specification for the start torque and the stall torque because it is higher than 5 Nm.

The motor P1VAS012A0010 has no specification for the nominal speed because if the motor reach the nominal speed then the max. adm. torque will be higher than 5 Nm.

**Nominal speed, nominal torque, min starting torque, stall torque No values as the motors can not reach these conditions, otherwise the maximum torque of the gearboxes will be exceeded.

Tel: +45 63 12 83 00 | Email: ps@hymatik.com | www.hymatik.com | Hvidkaervej 27a, DK-5250 Odense SV, Denmark

Dimensions [mm] - 120 watts

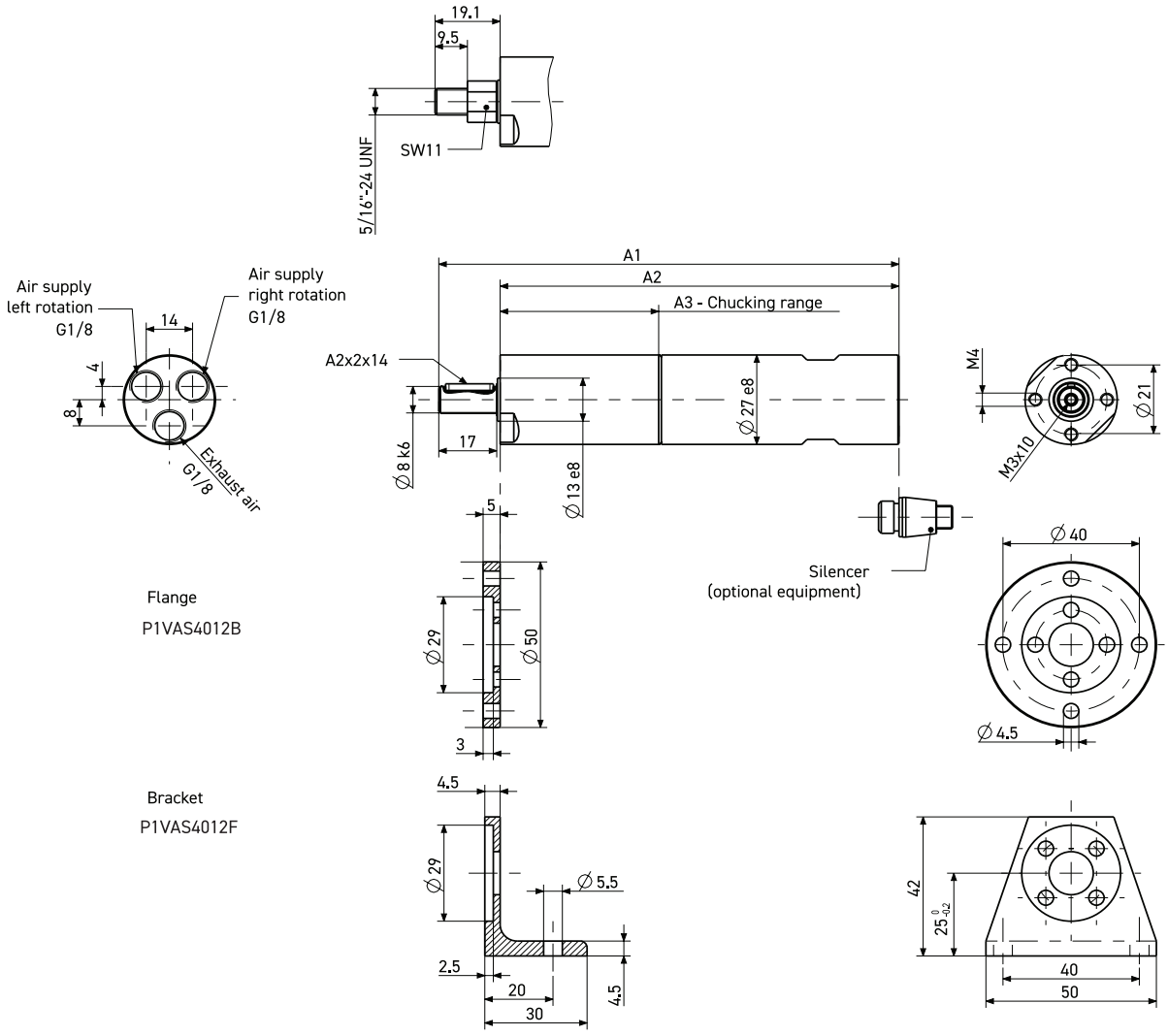

A1	A2	A3	Order Code		
135	117	46.5	**P1VAS012A*N00**	**P1VAS012A*550**	**P1VAS012A*360**
147.5	129.5	59	**P1VAS012A*140**	**P1VAS012A*090**	**P1VAS012A*060**
160	142	71.5	**P1VAS012A*010**		

* 0, C, Z

Tel: +45 63 12 83 00 | Email: ps@hymatik.com | www.hymatik.com | Hvidkaervej 27a, DK-5250 Odense SV, Denmark

Data for Reversible Air Motor Power 200 watts, with Keyed Shaft

Max power	Free speed	Nominal speed	Nominal torque	Min starting torque	Stall torque	Max adm torque	Air con-sumption	Supply/ Exhaust	Min pipe	Weight	ATEX	Rota-tion	Vanne Option	Order Code
[watt]	[rpm]	[rpm]		[Nm]	[Nm]	[Nm]	[m³/min]		[mm]	[kg]				
200	16000	8000	0.24	0.35	0.45	*	0.37	G1/8 | G1/4	10 | 10	0.70	T6 | T80°C	L & R	0. C. Z	**P1VAS020A0G00**
200	4600	2300	0.8	1.20	1.50	*	0.37	G1/8 | G1/4	10 | 10	0.75	T4 | T130°C	L & R	0. C. Z	**P1VAS020A0460**
200	2400	1200	1.6	2.40	3.00	*	0.37	G1/8 | G1/4	10 | 10	0.75	T4 | T130°C	L & R	0. C. Z	**P1VAS020A0240**
200	1400	700	2.7	4.10	5.10	*	0.37	G1/8 | G1/4	10 | 10	0.85	T4 | T130°C	L & R	0. C. Z	**P1VAS020A0140**
200	700	350	5.4	8.20	10.30	*	0.37	G1/8 | G1/4	10 | 10	0.85	T6 | T80°C	L & R	0. C. Z	**P1VAS020A0070**
200	360	180	10.6	15.90	**	20.00	0.37	G1/8 | G1/4	10 | 10	0.85	T6 | T80°C	L & R	0. C. Z	**P1VAS020A0036**
100	180	90	10.5	15.00	**	20.00	0.27	G1/8 | G1/4	10 | 10	0.85	T6 | T80°C	L & R	0. C. Z	**P1VAS020A0018**
180	50	**	**	**	**	20.00	0.34	G1/8 | G1/4	10 | 10	0.95	T6 | T80°C	L & R	0. C. Z	**P1VAS020A0005**

Data for Reversible Air Motor Power 200 watts, with Threaded Shaft

Max power	Free speed	Nominal speed	Nominal torque	Min starting torque	Stall torque	Max adm torque	Air con-sumption	Supply/ Exhaust	Min pipe	Weight	ATEX	Rota-tion	Vanne Option	Order Code
[watt]	[rpm]	[rpm]		[Nm]	[Nm]	[Nm]	[m³/min]		[mm]	[kg]				
200	16000	8000	0.24	0.35	0.45	*	0.37	G1/8 | G1/4	10 | 10	0.70	T6 | T80°C	-	0. C. Z	**P1VAS020D0G00**
200	4600	2300	0.8	1.20	1.50	*	0.37	G1/8 | G1/4	10 | 10	0.75	T4 | T130°C	-	0. C. Z	**P1VAS020D0460**
200	2400	1200	1.6	2.40	3.00	*	0.37	G1/8 | G1/4	10 | 10	0.75	T4 | T130°C	-	0. C. Z	**P1VAS020D0240**
200	1400	700	2.7	4.10	5.10	*	0.37	G1/8 | G1/4	10 | 10	0.85	T4 | T130°C	-	0. C. Z	**P1VAS020D0140**
200	700	350	5.4	8.20	10.30	*	0.37	G1/8 | G1/4	10 | 10	0.85	T6 | T80°C	-	0. C. Z	**P1VAS020D0070**
200	360	180	10.6	15.90	**	20.00	0.37	G1/8 | G1/4	10 | 10	0.85	T6 | T80°C	-	0. C. Z	**P1VAS020D0036**
100	180	90	10.5	15.00	**	20.00	0.27	G1/8 | G1/4	10 | 10	0.85	T6 | T80°C	-	0. C. Z	**P1VAS020D0018**
180	50	**	**	**	**	20.00	0.34	G1/8 | G1/4	10 | 10	0.95	T6 | T80°C	-	0. C. Z	**P1VAS020D0005**

Max. adm torque is restriction from the gear box Details on page 16.

Data for Reversible Air Motor Power 300 watts, with Keyed Shaft

Max power	Free speed	Nominal speed	Nominal torque	Min starting torque	Stall torque	Max adm torque	Air con-sumption	Supply/ Exhaust	Min pipe	Weight	ATEX	Rota-tion	Vanne Option	Order Code
[watt]	[rpm]	[rpm]		[Nm]	[Nm]	[Nm]	[m³/min]		[mm]	[kg]				
300	14500	7250	0.40	0.60	0.76	*	0.47	G1/8 | G1/4	10 | 10	0.70	T6 | T80°C	L & R	0. C. Z	**P1VAS030A0E50**
300	4600	2300	1.20	1.90	2.20	*	0.47	G1/8 | G1/4	10 | 10	0.75	T4 | T130°C	L & R	0. C. Z	**P1VAS030A0460**
300	2400	1200	2.40	3.60	4.50	*	0.47	G1/8 | G1/4	10 | 10	0.75	T4 | T130°C	L & R	0. C. Z	**P1VAS030A0240**
300	1230	615	4.65	6.95	8.80	*	0.47	G1/8 | G1/4	10 | 10	0.85	T4 | T130°C	L & R	0. C. Z	**P1VAS030A0123**
300	700	350	8.15	12.25	15.50	*	0.47	G1/8 | G1/4	10 | 10	0.85	T6 | T80°C	L & R	0. C. Z	**P1VAS030A0070**
300	360	180	15.90	23.80	30.20	*	0.47	G1/8 | G1/4	10 | 10	0.85	T6 | T80°C	L & R	0. C. Z	**P1VAS030A0036**
130	180	90	13.80	21.00	26.20	*	0.28	G1/8 | G1/4	10 | 10	0.85	T6 | T80°C	L & R	0. C. Z	**P1VAS030A0018**
300	100	**	**	**	**	36.00	0.47	G1/4 | G1/4	10 | 10	0.95	T6 | T80°C	L & R	0. C. Z	**P1VAS030A0010**
280	50	**	**	**	**	36.00	0.47	G1/4 | G1/4	10 | 10	1.25	T6 | T80°C	L & R	0. C. Z	**P1VAS030A0005**

Data for Reversible Air Motor Power 300 watts, with Threaded Shaft

Max power	Free speed	Nominal speed	Nominal torque	Min starting torque	Stall torque	Max adm torque	Air con-sumption	Supply/ Exhaust	Min pipe	Weight	ATEX	Rota-tion	Vanne Option	Order Code
[watt]	[rpm]	[rpm]		[Nm]	[Nm]	[Nm]	[m³/min]		[mm]	[kg]				
300	14500	7250	0.40	0.60	0.76	*	0.47	G1/4 | G1/4	10 | 10	1.00	T6 | T80°C	-	0. C. Z	**P1VAS030D0E50**
300	4600	2300	1.20	1.90	2.20	*	0.47	G1/4 | G1/4	10 | 10	1.05	T3 | T195°C	-	0. C. Z	**P1VAS030D0460**
300	2400	1200	2.40	3.60	4.50	*	0.47	G1/4 | G1/4	10 | 10	1.05	T4 | T130°C	-	0. C. Z	**P1VAS030D0240**
300	1230	615	4.65	6.95	8.80	*	0.47	G1/4 | G1/4	10 | 10	1.10	T4 | T130°C	-	0. C. Z	**P1VAS030D0123**
300	700	350	8.15	12.25	15.50	*	0.47	G1/4 | G1/4	10 | 10	1.15	T6 | T80°C	-	0. C. Z	**P1VAS030D0070**
300	360	180	15.90	23.80	30.20	*	0.47	G1/4 | G1/4	10 | 10	1.15	T6 | T80°C	-	0. C. Z	**P1VAS030D0036**
130	180	90	13.80	21.00	26.20	*	0.28	G1/4 | G1/4	10 | 10	1.15	T6 | T80°C	-	0. C. Z	**P1VAS030D0018**
300	100	**	**	**	**	36.00	0.47	G1/4 | G1/4	10 | 10	1.25	T6 | T80°C	-	0. C. Z	**P1VAS030D0010**
280	50	**	**	**	**	36.00	0.47	G1/4 | G1/4	10 | 10	1.25	T6 | T80°C	-	0. C. Z	**P1VAS030D0005**

Max. adm torque is restriction from the gear box Details on page 16.

Note: air motor rotation with threaded shaft may be reversed, but when operated anticlockwise, there is a risk that the driven unit may disconnect if it is not locked properly.
* Maximum admissible torque

No values as these motors can not achieve the maximum gear box torque. Stalll torque is the max they can achieve.
**nominal speed, nominal torque, min starting torque, stall torque No values as the motors can not reach these conditions, otherwise the maximum torque of the gearboxes will be exceeded.

Tel: +45 63 12 83 00 | Email: ps@hymatik.com | www.hymatik.com | Hvidkaervej 27a, DK-5250 Odense SV, Denmark

Dimensions [mm] - 200, 300 watts

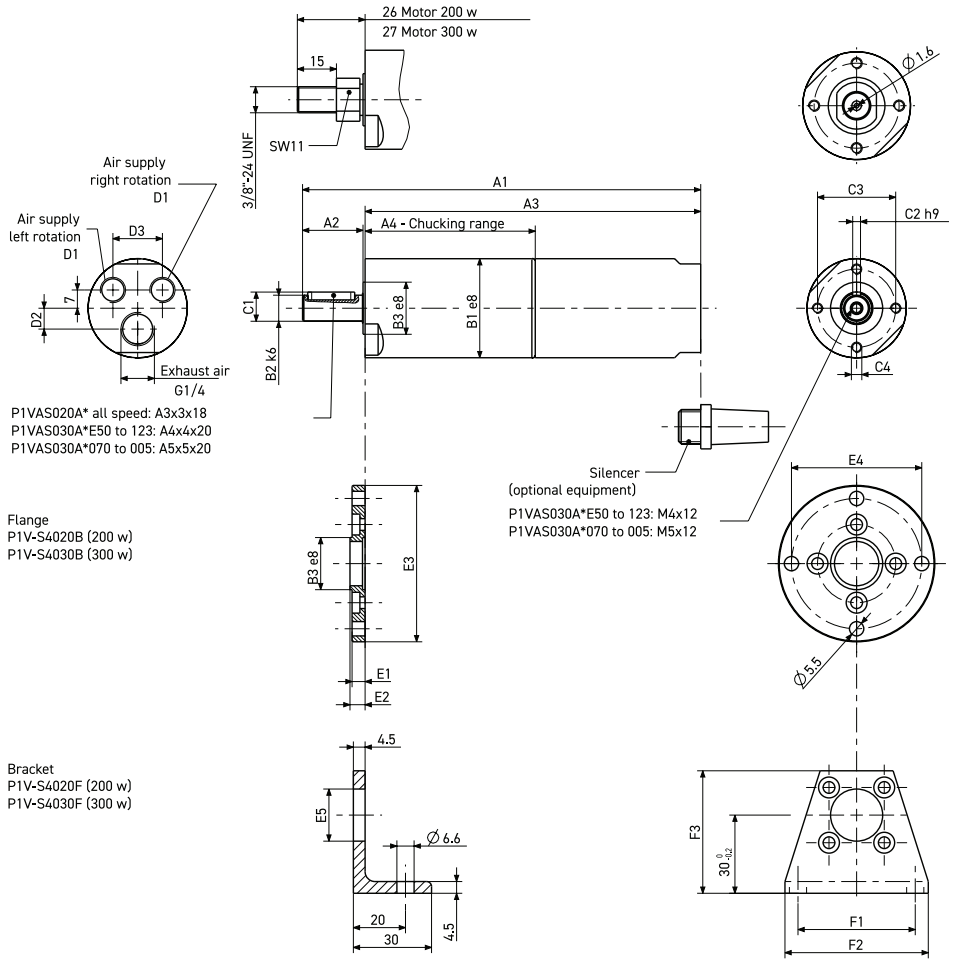

Dimension [mm] 200 watts

A1	A2	A3	A4	B1	B2	B3	C1	C2	C3	C4	Order Code			
152.5	23	128.5	65	38	10	20	11.2	3	30	M4	**P1VAS020A*G00**	**P1VAS020A*460**	**P1VAS020A*240**	
168	23	144.5	81	38	10	20	11.5	3	30	M4	**P1VAS020A*140**	**P1VAS020A*070**	**P1VAS020A*036**	**P1VAS020A*018**
184.5	23	160.5	97	38	10	20	11.5	3	30	M4	**P1VAS020A*005**			

D1	D2	D3	B3	E1	E2	E3	E4	E5	F1	F2	F3	Order Code			
G1/8	8	19	20	5	5.8	60	50	17	45	55	47	**P1VAS020A*G00**	**P1VAS020A*460**	**P1VAS020A*240**	
G1/8	8	19	20	5	5.8	60	50	17	45	55	47	**P1VAS020A*140**	**P1VAS020A*070**	**P1VAS020A*036**	**P1VAS020A*018**
G1/8	8	19	20	5	5.8	60	50	17	45	55	47	**P1VAS020A*005**			

Dimension [mm] 300 watts

A1	A2	A3	A4	B1	B2	B3	C1	C2	C3	C4	Order Code		
171	27	143	66	42	12	24	13.5	4	34	M5	**P1VAS030A*E50**	**P1VAS030A*460**	**P1VAS030A*240**
187	27	159	83	42	12	24	13.5	4	34	M5	**P1VAS030A*123**		
191	30	159	83	42	14	24	16	5	34	M5	**P1VAS030A*070**	**P1VAS030A*036**	**P1VAS030A*018**
196	30	164	83	42	14	24	16	5	34	M5	**P1VAS030A*010**	**P1VAS030A*005**	

D1	D2	D3	B3	E1	E2	E3	E4	E5	F1	F2	F3	Order Code		
G1/4	11	20	20	5	6.8	60	50	17	45	55	47	**P1VAS030A*E50**	**P1VAS030A*460**	**P1VAS030A*240**
G1/4	11	20	20	5	6.8	60	50	17	45	55	47	**P1VAS030A*123**		
G1/4	11	20	24	6	6.8	65	55	21	50	60	48	**P1VAS030A*070**	**P1VAS030A*036**	**P1VAS030A*018**
G1/4	11	20	24	6	6.8	65	55	21	50	60	48	**P1VAS030A*010**	**P1VAS030A*005**	

* 0, C, Z

Tel: +45 63 12 83 00 | Email: ps@hymatik.com | www.hymatik.com | Hvidkaervej 27a, DK-5250 Odense SV, Denmark

Data for Reversible Air Motor Power 600 watts, with Keyed Shaft

Max power	Free speed	Nominal speed	Nominal torque	Min starting torque	Stall torque	Max adm torque	Air consumption	Supply/ Exhaust		Min pipe		Weight	ATEX		Rotation	Vanne Option	Order Code
[watt]	[rpm]	[rpm]		[Nm]	[Nm]	[Nm]	[m³/min]			[mm]		[kg]					
600	13500	6750	0.85	1.25	1.60	*	0.85	G3/8	G1/2	12	12	2.20	T6	T80°C	L & R	0. C. Z	**P1VAS060A0D50**
600	5500	2750	2.00	3.10	3.90	*	0.85	G3/8	G1/2	12	12	2.70	T6	T80°C	L & R	0. C. Z	**P1VAS060A0550**
600	4000	2000	2.80	4.30	5.40	*	0.85	G3/8	G1/2	12	12	2.30	T3	T195°C	L & R	0. C. Z	**P1VAS060A0400**
600	3000	1500	3.80	5.70	7.20	*	0.85	G3/8	G1/2	12	12	2.30	T4	T130°C	L & R	0. C. Z	**P1VAS060A0300**
600	2000	1000	5.70	8.50	10.80	*	0.85	G3/8	G1/2	12	12	2.330	T4	T130°C	L & R	0. C. Z	**P1VAS060A0200**
600	700	350	16.30	24.50	31.10	*	0.85	G3/8	G1/2	12	12	2.60	T6	T80°C	L & R	0. C. Z	**P1VAS060A0070**
600	500	**250**	**22.90**	**34.30**	**43.50**	*	0.85	G3/8	G1/2	12	12	2.70	T6	T80°C	L & R	0. C. Z	**P1VAS060A0050**
600	340	**170**	**33.70**	**50.60**	**64.00**	*	0.85	G3/8	G1/2	12	12	2.70	T6	T80°C	L & R	0. C. Z	**P1VAS060A0034**
300	180	**90**	**31.80**	**47.40**	**60.40**	*	0.55	G3/8	G1/2	12	12	2.70	T6	T80°C	L & R	0. C. Z	**P1VAS060A0018**

Max. adm torque is restriction from the gear box Details on page 16.

Data for Reversible Air Motor Power 900 watts, with Keyed Shaft

Max power	Free speed	Nominal speed	Nominal torque	Min starting torque	Stall torque	Max adm torque	Air consumption	Supply/ Exhaust		Min pipe		Weight	ATEX		Rotation	Vanne Option	Order Code
[watt]	[rpm]	[rpm]		[Nm]	[Nm]	[Nm]	[m³/min]			[mm]		[kg]					
900	12600	6300	1.35	2.00	2.60	*	1.40	G3/8	G1/2	12	12	3.55	T6	T80°C	L & R	0. C. Z	**P1VAS090A0C60**
900	5200	2600	3.30	4.90	6.20	*	1.40	G3/8	G1/2	12	12	3.55	T6	T80°C	L & R	0. C. Z	**P1VAS090A0520**
900	3670	1835	4.60	7.00	8.90	*	1.40	G3/8	G1/2	12	12	3.65	T3	T195°C	L & R	0. C. Z	**P1VAS090A0367**
900	2850	1425	6.00	9.00	11.40	*	1.40	G3/8	G1/2	12	12	3.65	T4	T130°C	L & R	0. C. Z	**P1VAS090A0285**
900	1900	950	9.00	14.50	17.10	*	1.40	G3/8	G1/2	12	12	3.65	T4	T130°C	L & R	0. C. Z	**P1VAS090A0190**
900	650	325	26.40	39.60	50.20	*	1.40	G3/8	G1/2	12	12	3.95	T6	T80°C	L & R	0. C. Z	**P1VAS090A0065**
900	470	235	36.50	54.80	69.40	*	1.40	G3/8	G1/2	12	12	3.95	T6	T80°C	L & R	0. C. Z	**P1VAS090A0047**
900	310	155	55.40	83.10	105.30	*	1.40	G3/8	G1/2	12	12	3.95	T6	T80°C	L & R	0. C. Z	**P1VAS090A0031**

Max. adm torque is restriction from the gear box Details on page 16.

Data for Reversible Air Motor Power 1600 watts, with Keyed Shaft

Max power	Free speed	Nominal speed	Nominal torque	Min starting torque	Stall torque	Max adm torque	Air consumption	Supply/ Exhaust		Min pipe		Weight	ATEX		Rotation	Vanne Option	Order Code
[watt]	[rpm]	[rpm]		[Nm]	[Nm]	[Nm]	[m³/min]			[mm]		[kg]					
1600	9600	4800	3.10	4.70	6.05	*	1.60	G1/2	G3/4	19	19	5.90	T6	T80°C	L & R	0, C, Z	**P1VAS160A0960**
1600	2500	1250	12.20	18.30	23.20	*	1.60	G1/2	G3/4	19	19	6.10	T3	T195°C	L & R	0, C, Z	**P1VAS160A0250**
1600	1200	600	25.40	38.20	48.30	*	1.60	G1/2	G3/4	19	19	6.10	T4	T130°C	L & R	0, C, Z	**P1VAS160A0120**
1600	700	350	43.60	65.40	82.90	*	1.60	G1/2	G3/4	19	19	6.70	T4	T130°C	L & R	0, C, Z	**P1VAS160A0070**
1600	320	160	95.40	143.20	181.40	*	1.60	G1/2	G3/4	19	19	6.70	T4	T130°C	L & R	0, C, Z	**P1VAS160A0032**
700	200	100	66.90	100.00	125.00	+	1.60	G1/2	G3/4	19	19	6.70	T6	T80°C	L & R	0, C, Z	**P1VAS160A0020**
1600	160	80	191.00	**	**	220.20	1.60	G1/2	G3/4	19	19	8.00	T6	T80°C	L & R	0, C, Z	**P1VAS160A0016**

Max. adm torque is restriction from the gear box Details on page 16.

* Maximum admissible torque
No values as these motors can not achieve the maximum gear box torque. Stalll torque is the max they can achieve.
** Nominal speed, nominal torque, min starting torque, stall torque
No values as the motors can not reach these conditions, otherwise the maximum torque of the gearboxes will be exceeded.

Tel: +45 63 12 83 00 | Email: ps@hymatik.com | www.hymatik.com | Hvidkaervej 27a, DK-5250 Odense SV, Denmark

Dimensions [mm] - 600 watts

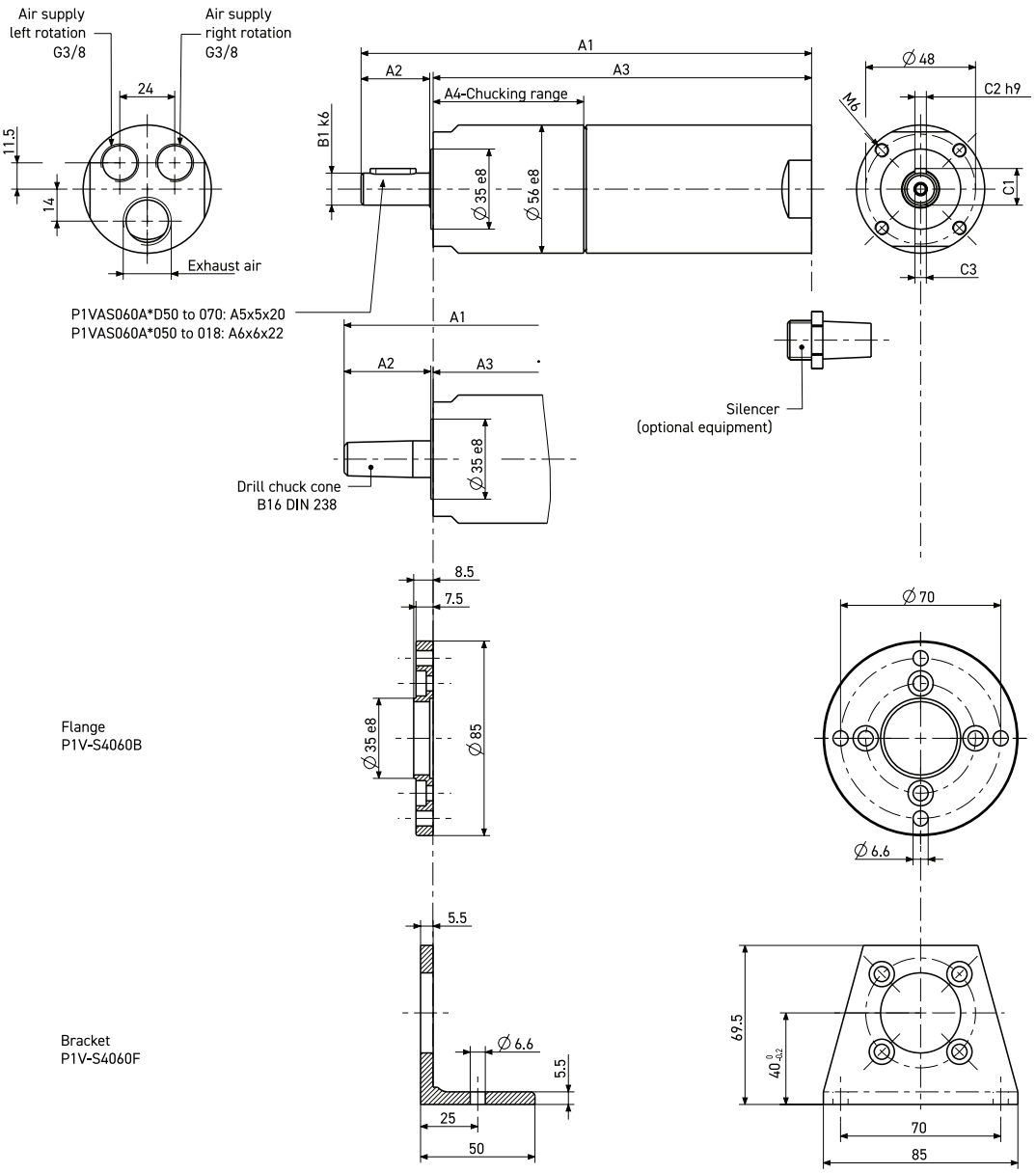

A1	A2	A3	A4	B1	C1	C2	C3	Order Code			
197	30.5	165.5	66	14	16	5	M5x12	**P1VAS060A*D50**	**P1VAS060A*400**	**P1VAS060A*300**	**P1VAS060A*200**
215	30.5	183.5	84	14	16	5	M5x12	**P1VAS060A*550**	**P1VAS060A*070**		
217	35	180	80.5	19	21.5	6	M6x12	**P1VAS060A*050**	**P1VAS060A*034**	**P1VAS060A*018**	

* 0, C, Z

Tel: +45 63 12 83 00 | Email: ps@hymatik.com | www.hymatik.com | Hvidkaervej 27a, DK-5250 Odense SV, Denmark

Dimensions [mm] - 900 watts

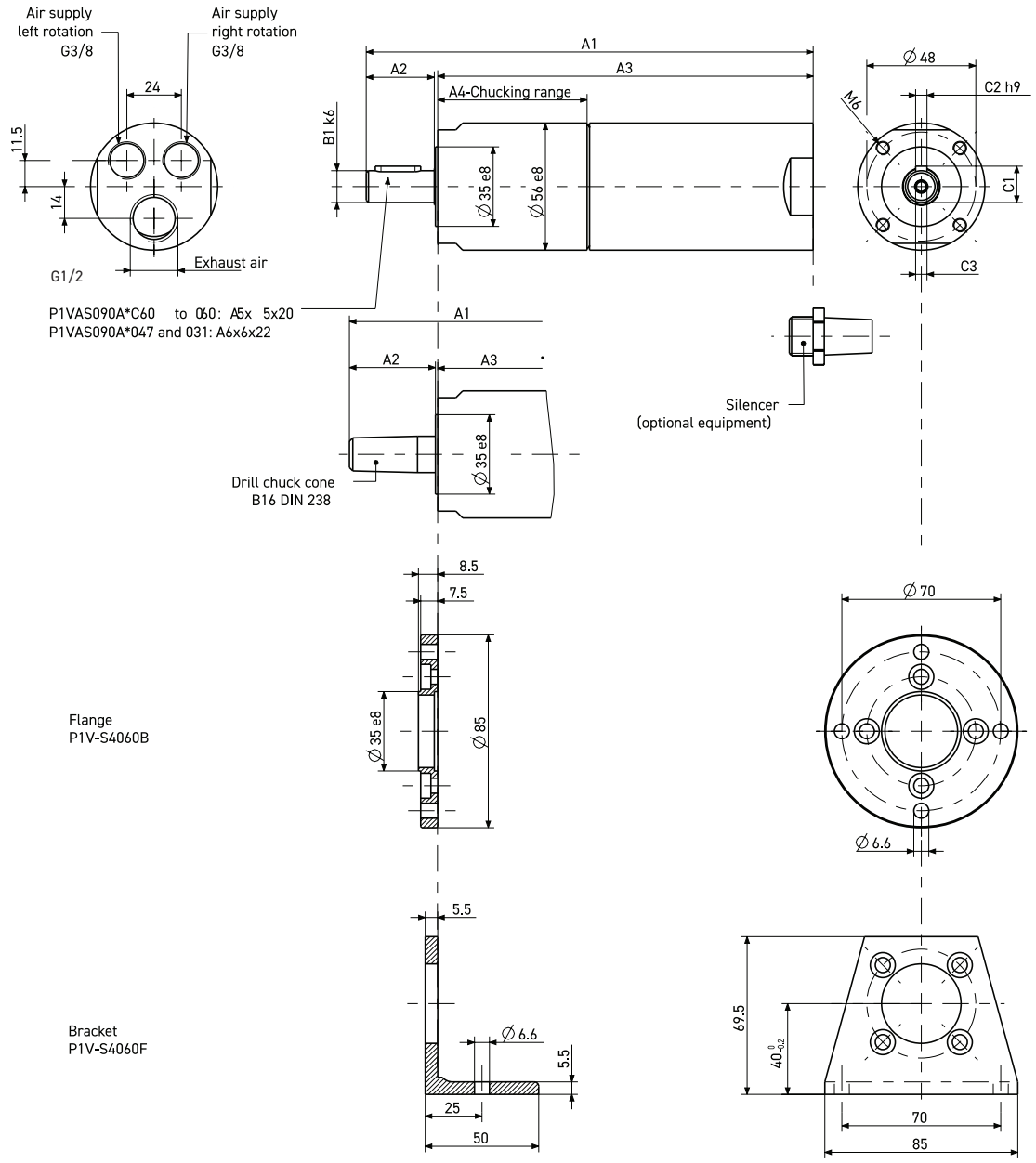

A1	A2	A3	A4	B1	C1	C2	C3	Order Code			
222	30.5	190.5	66	14	16	5	M5x12	**P1VAS090A*C60**	**P1VAS090A*520**	**P1VAS090A*367**	**P1VAS090A*285**
240	30.5	208.5	84	14	16	5	M5x12	**P1VAS090A*190**	**P1VAS090A*065**		
242	35	205	80.5	19	21.5	6	M6x12	**P1VAS090A*047**	**P1VAS090A*031**		

* 0, C, Z

Tel: +45 63 12 83 00 | Email: ps@hymatik.com | www.hymatik.com | Hvidkaervej 27a, DK-5250 Odense SV, Denmark

Dimensions [mm] - 1600 watts

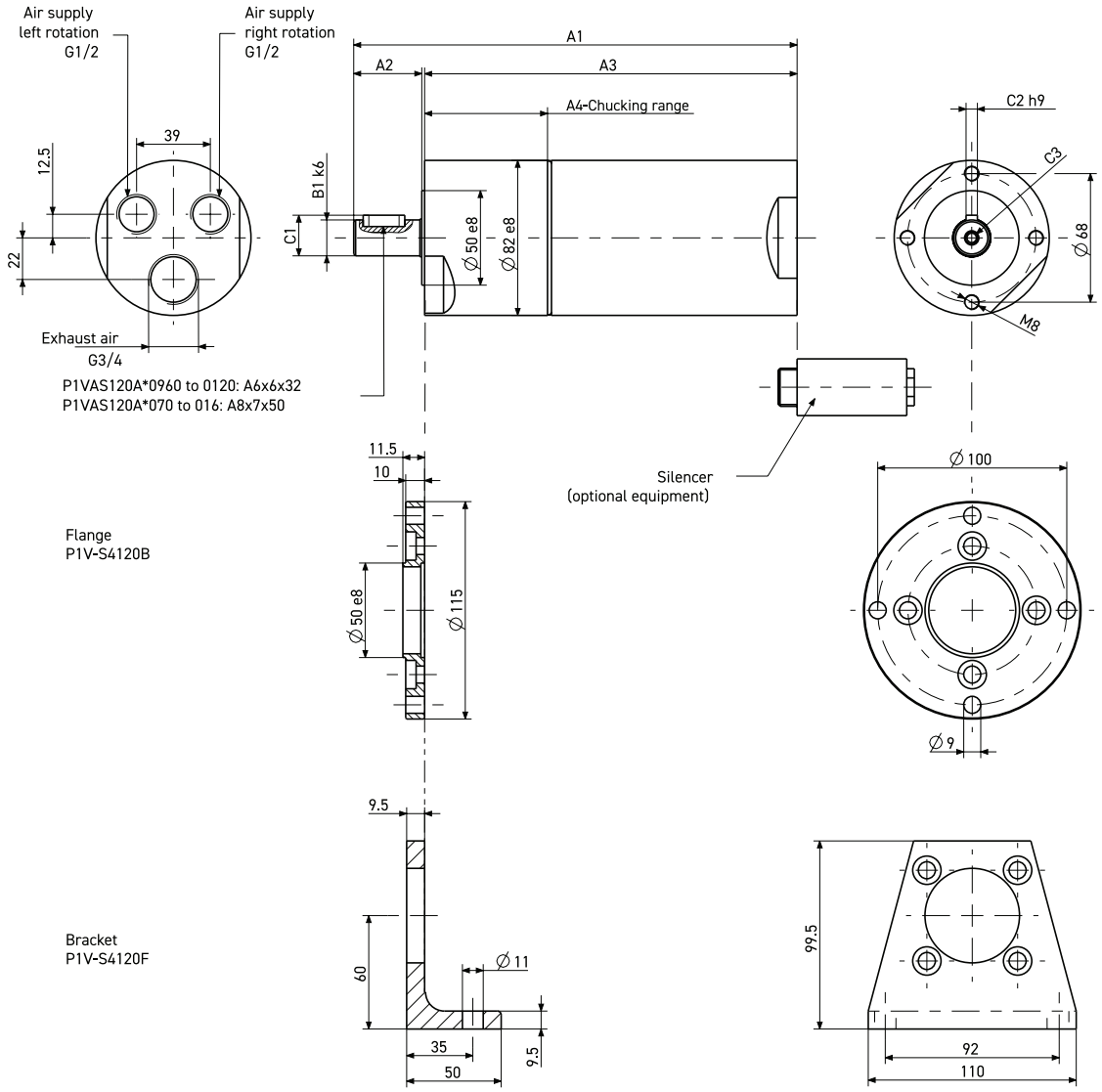

A1	A2	A3	A4	B1	C1	C2	C3	Order Code		
235	35	197	65	19	21.5	6	M6x15	**P1VAS160A*960**	**P1VAS160A*250**	**P1VAS160A*120**
368	60	205	73	28	31	8	M10x20	**P1VAS160A*070**	**P1VAS160A*032**	**P1VAS160A*020**
311.5	61.5	248.5	116.5	28	31	8	M10x20	**P1VAS160A*016**		

* 0, C, Z

Tel: +45 63 12 83 00 | Email: ps@hymatik.com | www.hymatik.com | Hvidkaervej 27a, DK-5250 Odense SV, Denmark

LUBRICATION AND SERVICE LIFE

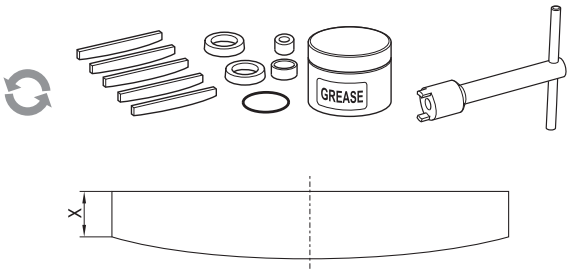

Air motor	Dimensions on vanes X (mm), type of vanes			
	0	Z	C	M
P1VAS012	3.3	3.3	3.3	3.3
P1VAS020	5.8	5.3	5.3	5.3
P1VAS030	6.0	5.2	6.0	5.2
P1VAS060	6.0	6.0	6.0	6.0
P1VAS090	X	X	X	X
P1VAS160	14.2	13.5	13.5	13.5

* The specified hours of operation apply when the motor is running at the speed corresponding to maximum power (load speed). This is approximately half free speed.If the motor operates at higher speeds, the service interval is shorter.If the motor operates at lower speeds, the service interval is longer.

The first service is due after approximately 500 hours of operation. After the first service, the service interval is determined by the degree of vane wear*. The table below shows new dimensions and the minimum dimensions of worn vanes. The following normal service intervals should be applied to in order to guarantee problem-free operation in air motors working continuously at load speeds.

Intermittent lubrication-free operation of motors with standard vanes, option 0

Duty cycle :	70%
Max. duration of intermittent use :	15 minutes
Filtering 40 µm :	750 hours of operation*
Filtering 5 µm :	1,000 hours of operation*

Continuous lubricated operation of motors with standard vanes, option 0

Duty cycle :	Continuous
Quantity of oil :	1 drop per m3 of air
Filtering 40 µm :	1,000 hours of operation*
Filtering 5 µm :	2,000 hours of operation*

Note! After 1000 hours of operation, the grease in the planetary gearbox must be changed

Continuous lubrication-free operation of motors equipped with vanes, option C

Duty cycle :	Continuous
Filtering 40 µm :	750 hours of operation*
Filtering 5 µm :	1,000 hours of operation*

SERVICE KITS



Optional function “0”

Service kits, vanes for intermittent lubrication-free operation



Optional function “Z”

Service kits, spring-loaded vanes for intermittent lubrication-free operation



Optional function “C”

Service kits, vanes for continuous lubrication-free operation

Tel: +45 63 12 83 00 | Email: ps@hymatik.com | www.hymatik.com | Hvidkaervej 27a, DK-5250 Odense SV, Denmark

Vane option	Air Motor	Order Code
0 vanes option	P1VAS012A0N00	**P1VAS6/4455801C**
	P1VAS012A0550 to 010	**P1VAS6/4455801G**
C vanes option	P1VAS012ACN00	**P1VAS6/4455801D**
	P1VAS012A0550 to 010	**P1VAS6/4455801H**
Z vanes option	P1VAS012AZN00	**P1VAS6/4455804C**
	P1VAS012AZ550 to 010	**P1VAS6/4455804B**
0 vanes option	P1VAS020A0G00	**P1VAS6/4447851E**
	P1VAS020A0460 to 0005	**P1VAS6/4447851F**
C vanes option	P1VAS020ACG00	**P1VAS6/4447853C**
	P1VAS020AC460 to 0005	**P1VAS6/4447853B**
Z vanes option	P1VAS020AZG00	**P1VAS6/4447854C**
	P1VAS020AZ460 to 0005	**P1VAS6/4447854B**
0 vanes option	P1VAS030A0E50	**P1VAS6/4447861L**
	P1VAS030A0460 to 005	**P1VAS6/4447861M**
C vanes option	P1VAS030ACE50	**P1VAS6/4447863C**
	P1VAS030AC460 to 005	**P1VAS6/4447863B**
Z vanes option	P1VAS030AZE50	**P1VAS6/4447864C**
	P1VAS030AZ460 to 005	**P1VAS6/4447864B**
0 vanes option	P1VAS060A0D50 and 550	**P1VAS6/4447871K**
	P1VAS060A0400 to 070	**P1VAS6/4447871M**
C vanes option	P1VAS060A0050 to 018	**P1VAS6/4447871L**
	P1VAS060ACD50 and 550	**P1VAS6/4447873E**
Z vanes option	P1VAS060AC400 to 070	**P1VAS6/4447873C**
	P1VAS060AC050 to 018	**P1VAS6/4447873D**
0 vanes option	P1VAS060AZD50 and 550	**P1VAS6/4447874E**
	P1VAS060AZ400 to 070	**P1VAS6/4447874C**
C vanes option	P1VAS060AZ050 to 018	**P1VAS6/4447874D**
	P1VAS090A0C60 and 520	**P1VAS6/4449191G**
Z vanes option	P1VAS090A0367 to 065	**P1VAS6/4449191E**
	P1VAS090A0047 and 031	**P1VAS6/4449191F**
0 vanes option	P1VAS090ACC60 and 520	**P1VAS6/1191563A**
	P1VAS090AC367 to 065	**P1VAS6/1191563B**
C vanes option	P1VAS090AC047 and 031	**P1VAS6/1191563C**
	P1VAS090AZC60 and 520	**P1VAS6/1191564A**
Z vanes option	P1VAS090AZ367 to 065	**P1VAS6/1191564B**
	P1VAS090AC047 and 031	**P1VAS6/1191654C**
0 vanes option	P1VAS160A0960 and 250	**P1VAS6/4447881D**
	P1VAS160A0120 and 070	**P1VAS6/4447881E**
C vanes option	P1VAS160A0032 and 020	**P1VAS6/4447881F**
	P1VAS160A0016	**P1VAS6/4447881C**
Z vanes option	P1VAS160AC960 and 250	**P1VAS6/4447883D**
	P1VAS160AC120 and 070	**P1VAS6/4447883E**
0 vanes option	P1VAS160AC032 and 020	**P1VAS6/4447883F**
	P1VAS160AC0016	**P1VAS6/4447883C**
C vanes option	P1VAS160AZ960 and 250	**P1VAS6/4447884D**
	P1VAS160AZ120 and 070	**P1VAS6/4447884E**
Z vanes option	P1VAS160AZ032 and 020	**P1VAS6/4447884F**
	P1VAS160AZ016	**P1VAS6/4447884C**

Optional vanes
0 Standard vanes
C Continous lubrication-free operations
Z Standard spring loaded vanes

Tel: +45 63 12 83 00 | Email: ps@hymatik.com | www.hymatik.com | Hvidkaervej 27a, DK-5250 Odense SV, Denmark

P1V-M COMPACT AIR MOTORS

Contents Page

General. 29
Technical data 30
Choice of air motor 31
Compact air motors without gear boxes, 200 to 1200 watts 32
Dimensions 33
Compact air motors with gear box 200 watts 34
Dimensions 200 watts 35
Compact air motors with gear box 400 watts 36
Dimensions 400 watts 37
Compact air motors with gear box 600 watts 38
Dimensions 600 watts 39
Compact air motors with gear box 900 watts 40
Dimensions 900 watts. 41
Compact air motors with gear box 1200 watts 42
Dimensions 1200 watts. 43
Permissible forces air motors with gear boxes 44
Service 45
Lubrication and Service Life 46
Service Parts 46
Serivce Kits 47



Tel: +45 63 12 83 00 | Email: ps@hymatik.com | www.hymatik.com | Hvidkaervej 27a, DK-5250 Odense SV, Denmark

Compact Air Motors

P1V-M is a series of air motors, with planetary gearbox and motor made of grey casted iron. Its robustness makes it suitable for all normal air motor applications.

The range contains three different sizes with power ratings of 200, 400, 600, 900 and 1200 Watts. The motor and gearbox are built to be extremely strong, making the motors suitable for applications requiring considerable robustness. The gearbox is of the planetary type, permanently lubricated with grease. The flange mounting is cast as an integral part of the case, and give, together with the foot bracket, plenty of opportunity for simple and robust installation.

A new design principle has made service activities quicker and easier than for any comparable motor. Servicing involves loosening the screws holding the rear piece to the motor, removing the worn vanes from the back and inserting the new vanes. Unlike traditional air motors, there is no need to fully open the P1V-M for servicing, making the process much easier.

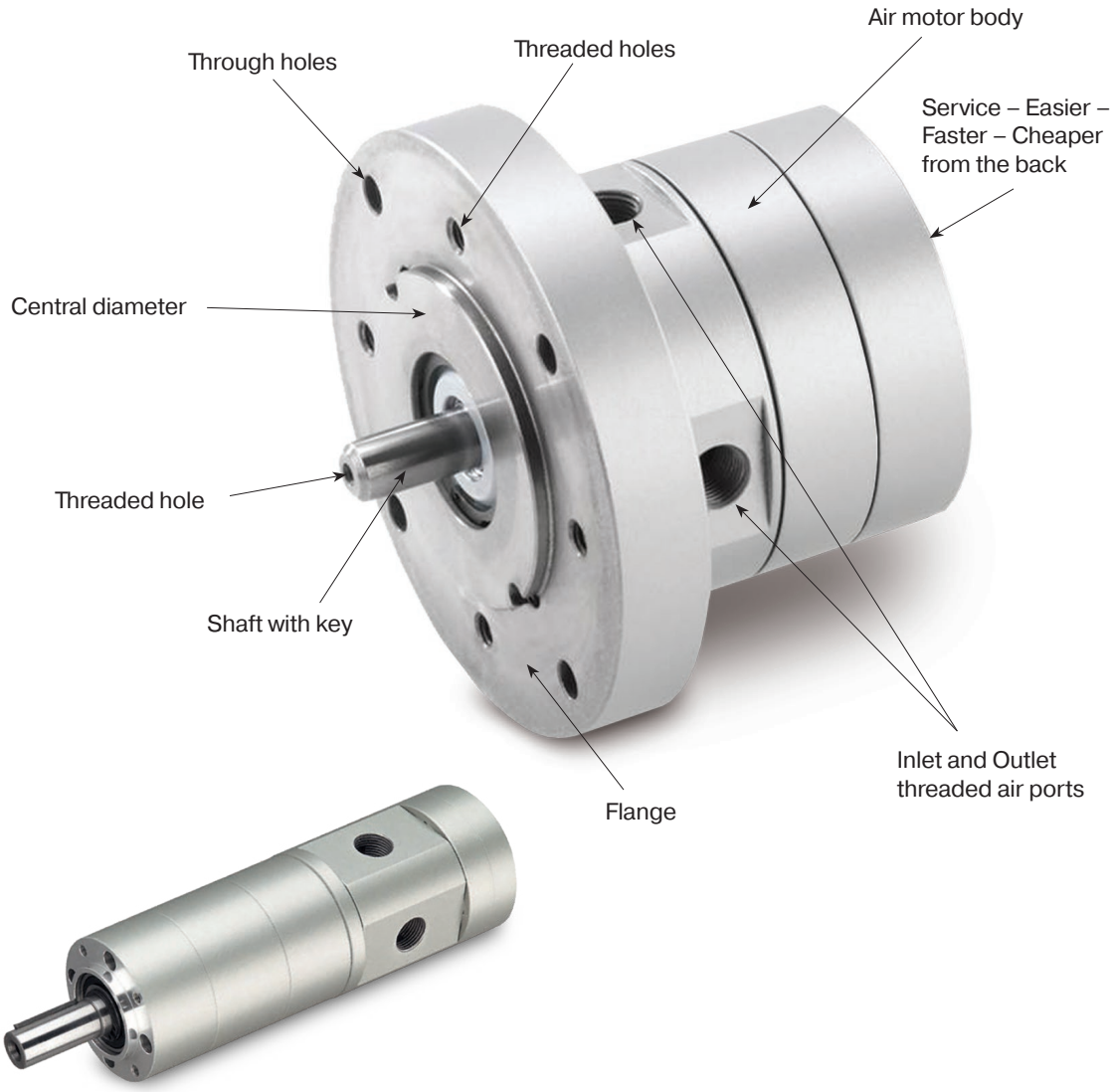

Tel: +45 63 12 83 00 | Email: ps@hymatik.com | www.hymatik.com | Hvidkaervej 27a, DK-5250 Odense SV, Denmark

TECHNICAL DATA

Note:
All technical data are based on a working pressure of 6 bar and with oil. For oil-free performances are -10 to 15% lower than data in charts. Speed tolerance accuracy in between clock and anti-clockwise directions is ±10%.

Air motor size & type	P1V-M020	P1V-M040	P1V-M060	P1V-M090	P1V-M120
Nominal power (watts)	200	400	600	900	1200
Working pressure (bar)	3 to 7, 6 in explosive atmosphere				
Working temperature (°C)	-20 to +110				
Ambient temperature (°C)	-20 to +40 in explosive atmosphere				
Air flow required (Nl/min)	300	600	900	2200	2600
Min pipe ID, inlet (mm)	10	12	13	13	13
Min pipe ID, outlet (mm)	10	12	13	13	13
Choice of treatment unit: recommended min air flow (l/min) at p1 7.5 bar and 0.8 bar pressure drop					
	330	660	990	2500	2900
Choice of valve: recommended min nominal air flow (l/min) at p1 6 bar and 1 bar pressure drop					
	360	720	1080	2800	3200
Medium	40 µm filtered, oil mist or dry unlubricated compressed air				
Oil free operation, indoor	ISO8573-1 purity class 3.4.1				
Oil free operation, outdoor	ISO8573-1 purity class 1.2.1				
Oil operation	1-2 drop per cube meter, ISO8573-1 purity class 3.-.5				
Recommended oil	Foodstuffs industry Klüber oil 4 UH1- 32 N				
Sound level free outlet (dB(A))	107	107	107	120	120
With outlet silencer (dB(A))	97	98	99	81	81

Note: sound levels are measured at free speed with the measuring instrument positioned 1 meter away from the air motor at an height of 1 meter.

Material specification

Air motor size & type	P1V-M020	P1V-M040	P1V-M060	P1V-M090	P1V-M120
	Without gear box				
Motor housing	Cast iron, synthetic paint, grey color				
Shaft	Hardened steel				
Key	Hardened steel				
External seal	NBR				
Internal steel parts	High grade steel				
Motor lubrication	Bearings: grease				
Vanes	Patented, no data				
	With gear box				
Planetary gearbox	Steel / cast iron, synthetic paint, grey color				
Shaft	Hardened steel				
Key	Hardened steel				
External seal	HBR				
Internal steel parts	High grade steel				
Gearbox lubrication	Grease, Shell Cassida RLS2				

Tel: +45 63 12 83 00 | Email: ps@hymatik.com | www.hymatik.com | Hvidkaervej 27a, DK-5250 Odense SV, Denmark

Choice of an air motor

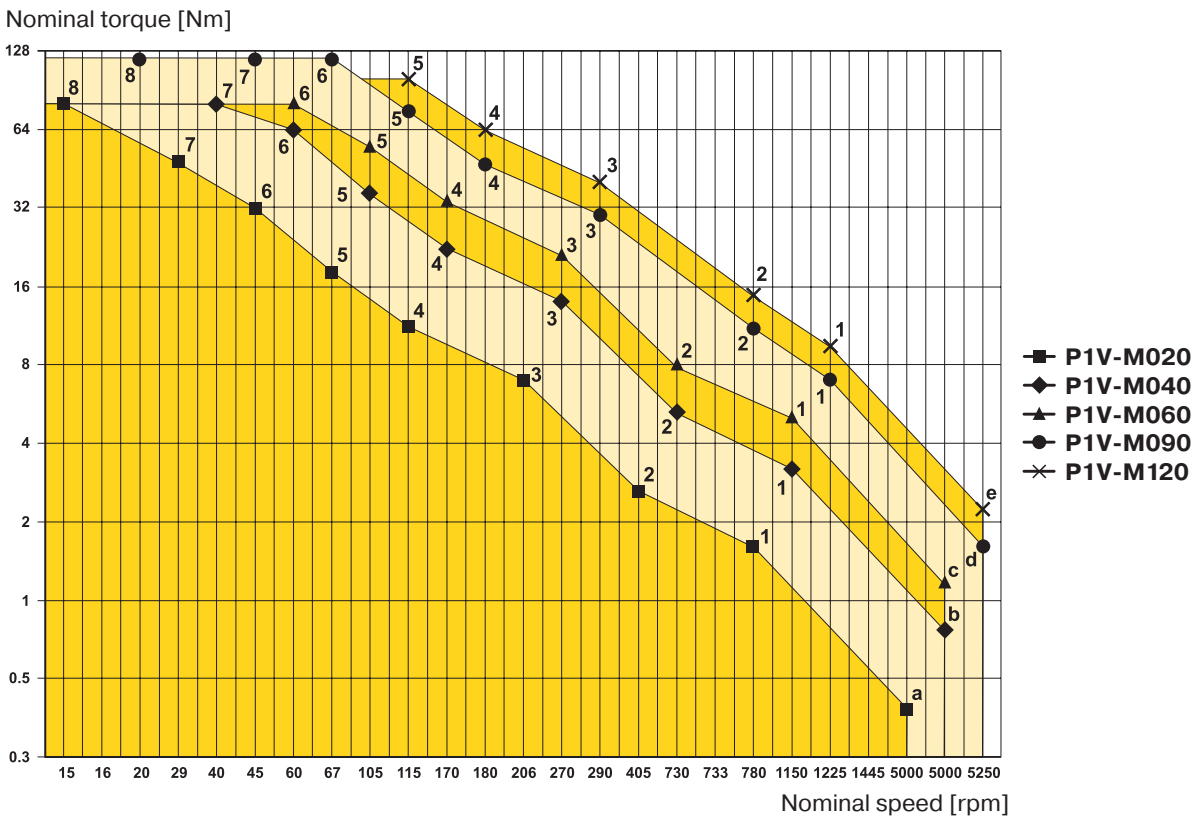

The motor to be used should be selected by starting with the torque needed at a specific shaft speed. In other words, to choose the right motor, you have to know the required speed and torque. Since maximum power is reached at half the motor's free speed, the motor should be chosen so that the operating point is as close as possible to the maximum power of the motor.

The design principle of the motor means that higher torque is generated when it is braked, which tends to increase the speed, etc. This means that the motor has a kind of speed self-regulation function built in.

Use the above graph to choose the correct motor size. The graph contains the points for the maximum torque of each motor at maximum output. Add your operating point to the graph, then select a marked point above and to the right of your point.

Then use the correct working diagram of the chosen motor to get more detailed technical data. Always select a motor whose requisite technical data are in the shaded area. Also use the correction diagram to find out what operation with different supply pressures would mean for the motor.

Tip: Select a motor which is slightly too fast and powerful, then regulate its speed and torque with a pressure regulator and/or throttle to achieve the optimum working point.

Air motors in diagram above

■a	P1V-M020B0A00
◆b	P1V-M040B0A00
▲c	P1V-M060B0A00
●d	P1V-M090B0A00
X e	P1V-M120B0A00
■ 1	P1V-M020C0230
■ 2	P1V-M020C0146
■ 3	P1V-M020C0054
■ 4	P1V-M020C0034
■ 5	P1V-M020C0021
■ 6	P1V-M020C0012
■ 7	P1V-M020C0008
■ 8	P1V-M020C0003
◆ 1	P1V-M040C0230
◆ 2	P1V-M040C0146
◆ 3	P1V-M040C0054
◆ 4	P1V-M040C0034
◆ 5	P1V-M040C0021
◆ 6	P1V-M040C0012
◆ 7	P1V-M040C0008
▲ 1	P1V-M060C0230
▲ 2	P1V-M060C0146
▲ 3	P1V-M060C0054
▲ 4	P1V-M060C0034
▲ 5	P1V-M060C0021
▲ 6	P1V-M060C0012
● 1	P1V-M090C0245
● 2	P1V-M090C0156
● 3	P1V-M090C0058
● 4	P1V-M090C0036
● 5	P1V-M090C0023
● 6	P1V-M090C0013
● 7	P1V-M090C0009
● 8	P1V-M090C0004
X 1	P1V-M120C0245
X 2	P1V-M120C0156
X 3	P1V-M120C0058
X 4	P1V-M120C0036
X 5	P1V-M120C0023

Tel: +45 63 12 83 00 | Email: ps@hymatik.com | www.hymatik.com | Hvidkaervej 27a, DK-5250 Odense SV, Denmark

Compact Air Motors - 200 to 1200 watts without gear boxes

NOTE! All technical data are based on a working pressure of 6 bar and with oil. For oil-free performances are -10 to 15 % lower. Speed tolerance accuracy -+10 %.



CE II 2D Ex h IIC T4 Gb X
II 2D Ex h IIIC T130°C Db X



Compact motor reversible with keyed shaft, flange

Max power	Free speed*	Nominal speed	Nominal torque	Min starting torque	Air consumption at max power	Conn.	Min pipe ID	Weight	Order Code
[kW]	[rpm]	[rpm]	[Nm]	[Nm]	[l/s]		[mm]	[kg]	
0.200	10000	5000	0.38	0.57	5	G1/8	10	1.00	**P1V-M020B0A00**
0.400	10000	5000	0.76	1.10	10	G3/8	12	1.40	**P1V-M040B0A00**
0.600	10000	5000	1.10	1.70	15	G3/8	13	1.60	**P1V-M060B0A00**
0.900	10500	5250	1.60	2.40	36.7	G1/2	13	3.10	**P1V-M090B0A00**
1.200	10500	5250	2.20	3.30	43.3	G1/2	13	3.80	**P1V-M120B0A00**

* maximum admissible speed (idling)

P1V-M020B0A00

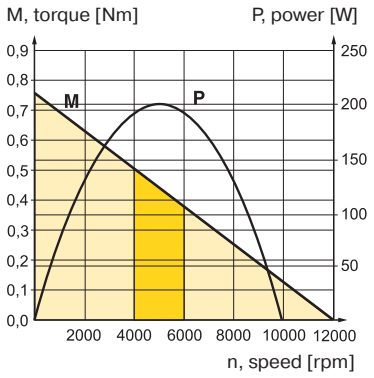

P1V-M040B0A00

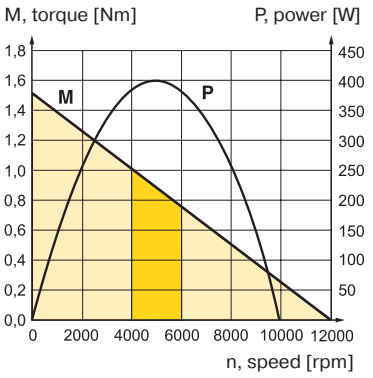

P1V-M060B0A00

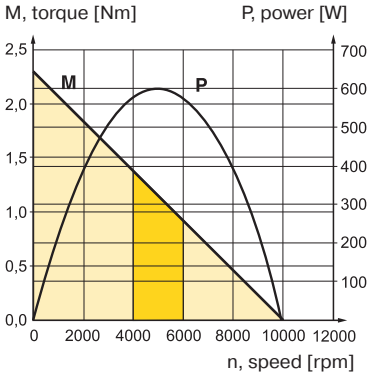

P1V-M090B0A00

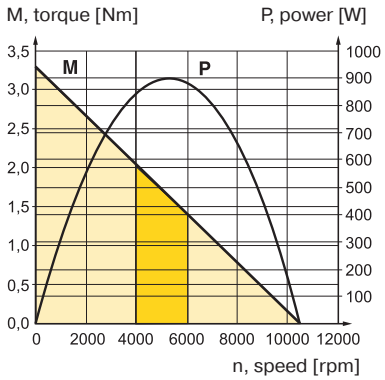

P1V-M120B0A00

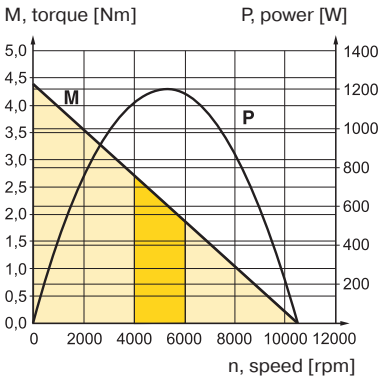

Possible working range of motor.

Optimum working range of motor.
Higher speeds = more vane wear
Lower speeds with high torque = more gearbox wear

Tel: +45 63 12 83 00 | Email: ps@hymatik.com | www.hymatik.com | Hvidkaervej 27a, DK-5250 Odense SV, Denmark

Dimensions [mm] - 200 to 1200 watts without gear boxes

Motor P1V-M020B0A00
Motor P1V-M040B0A00
Motor P1V-M060B0A00

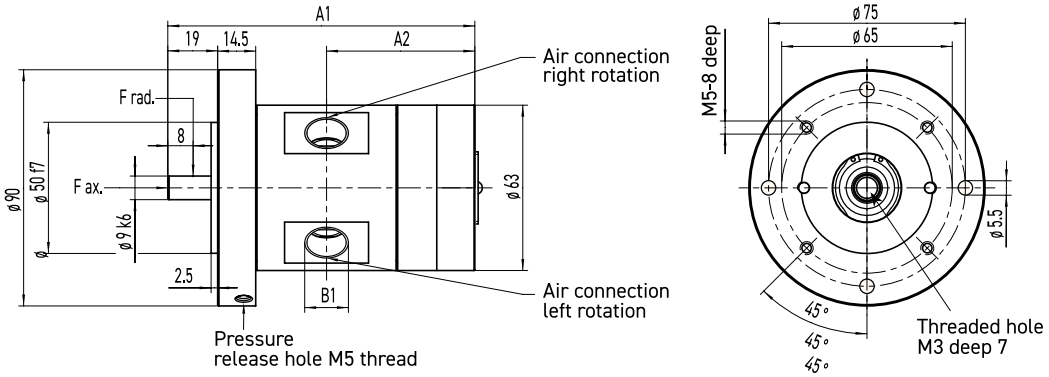

Motor P1V-M090B0A00
Motor P1V-M120B0A00

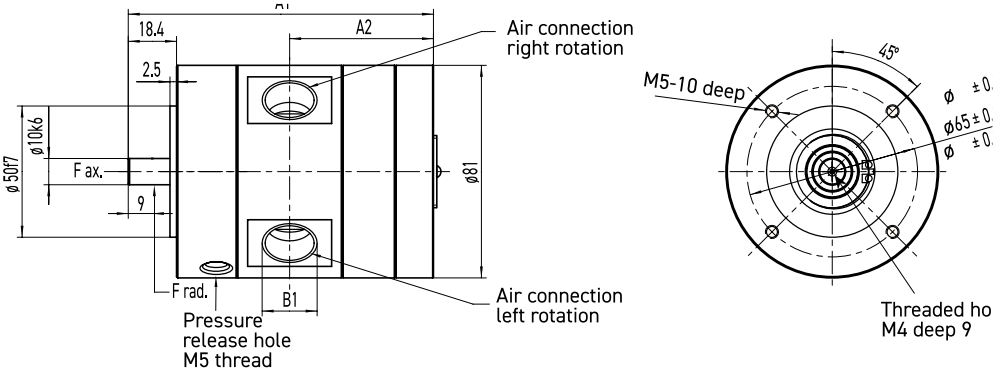

Foot bracket P1V-MF3

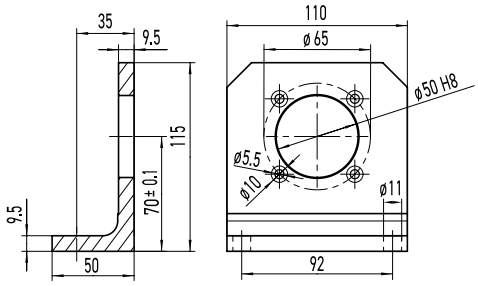

Motor type	Dimensions (mm)				
	A1	A2	B1	Key on shaft	
P1V-M020B0A00	82	39	G1/8	DIN6885	A3x3x10
P1V-M040B0A00	102	49	G3/8	DIN6885	A3x3x10
P1V-M060B0A00	117	56.5	G3/8	DIN6885	A3x3x10
P1V-M090B0A00	116.3	554.8	G1/2	DIN6885	A3x3x18
P1V-M120B0A00	136.3	64.3	G1/2	DIN6885	A3x3x18

Tel: +45 63 12 83 00 | Email: ps@hymatik.com | www.hymatik.com | Hvidkaervej 27a, DK-5250 Odense SV, Denmark

Compact Air Motors - 200 Watts

NOTE! All technical data are based on a working pressure of 6 bar and with oil. For oil-free performances are -10 to 15% lower. Speed tolerance accuracy -+10%.



CE II 2D Ex h IIC T4 Gb X
II 2D Ex h IIIC T130°C Db X

Compact reversible motor with keyed shaft, flange

Max power	Free speed*	Nominal speed	Nominal torque	Min starting torque	Air consumption at max power	Conn.	Min pipe ID	Weight	Order Code
[kW]	[rpm]	[rpm]	[Nm]	[Nm]	[l/s]		[mm]	[kg]	
0.200	2300	1150	1.60	2.40	5	G1/8	10	2.40	**P1V-M020C0230**
0.200	1460	730	2.60	3.90	5	G1/8	10	2.40	**P1V-M020C0146**
0.200	540	270	7.00	10.50	5	G1/8	10	2.80	**P1V-M020C0054**
0.200	340	170	11.20	16.80	5	G1/8	10	2.80	**P1V-M020C0034**
0.200	210	105	18.20	27.30	5	G1/8	10	2.80	**P1V-M020C0021**
0.200	120	60	31.80	47.70	5	G1/8	10	3.20	**P1V-M020C0012**
0.200	80	40	47.80	71.70	5	G1/8	10	3.20	**P1V-M020C0008**
0.200	32	16	80**	80**	5	G1/8	10	3.20	**P1V-M020C0003**

* maximum admissible speed (idling) / ** gear box restriction

P1V-M020C0230

M, torque [Nm] P, power [W]

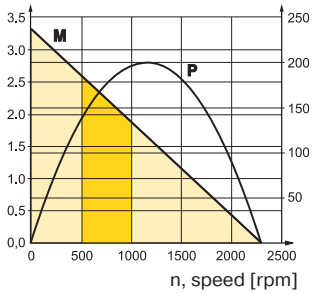

P1V-M020C0146

M, torque [Nm] P, power [W]

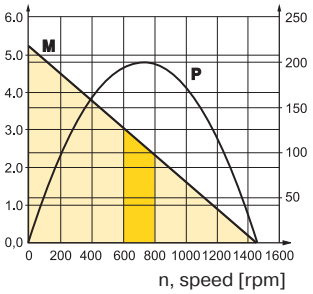

P1V-M020C0054

M, torque [Nm] P, power [W]

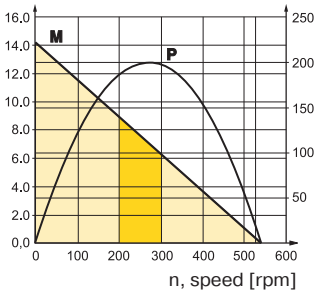

P1V-M020C0034

M, torque [Nm] P, power [W]

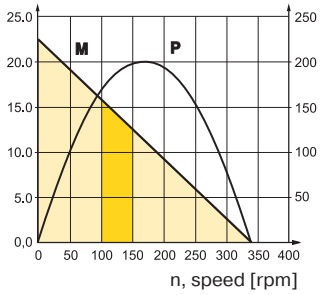

P1V-M020C0021

M, torque [Nm] P, power [W]

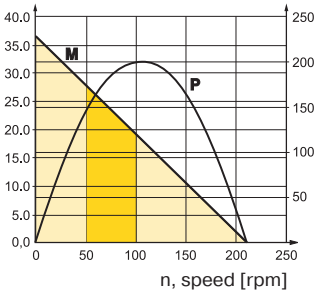

P1V-M020C0012

M, torque [Nm] P, power [W]

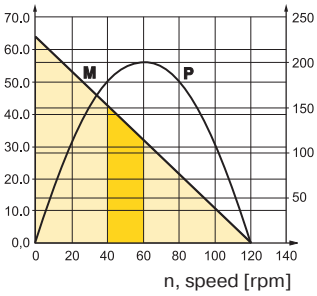

P1V-M020C0008

M, torque [Nm] P, power [W]

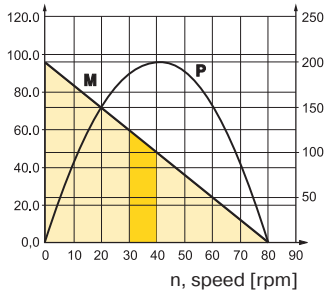

P1V-M020C0003

M, torque [Nm] P, power [W]

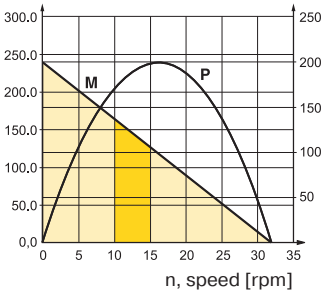

Possible working range of motor.

Optimum working range of motor.

Higher speeds = more vane wear
Lower speeds with high torque = more gearbox wear

Tel: +45 63 12 83 00 | Email: ps@hymatik.com | www.hymatik.com | Hvidkaervej 27a, DK-5250 Odense SV, Denmark

Dimensions [mm] - 200 watts

Motor P1V-M020C

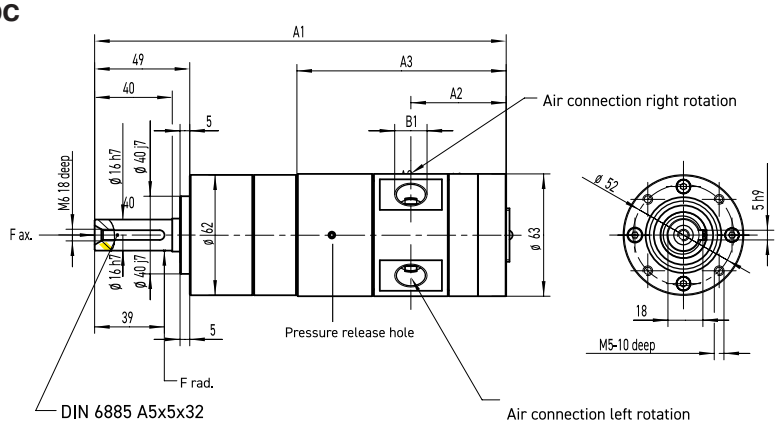

Motors have 2 or 3 openings at the ouside of the gearbox which must stay open in order to guarantee troublefree operation.

Foot bracket
P1V-MF4

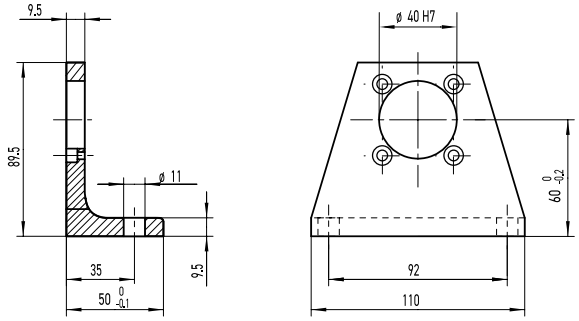

Flanges
P1V-MF8, P1V-MF9

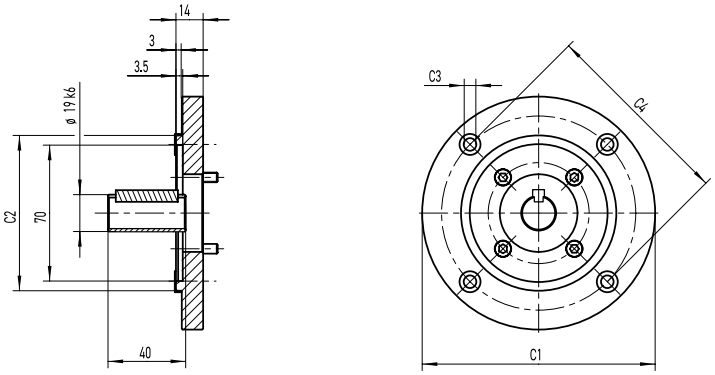

Motor size	Ordering Code			Dimensions (mm)			
				A1	A2	A3	B1
200 watts	P1V-M020C0230	P1V-M020C0034		192.5	39	88	G1/8
	P1V-M020C0146	P1V-M020C0021	P1V-M020C0008	208.5	39	88	G1/8
	P1V-M020C0054	P1V-M020C0012	P1V-M020C0003	224	39	88	G1/8

Motor type		Dimensions (mm)			
		C1	C2	C3	C4
P1V-M020C	(IEC80 B5) P1V-MF9	200	130f7	11	165
	(IEC80 B14) P1V-MF8	120	80f7	M6	100

Tel: +45 63 12 83 00 | Email: ps@hymatik.com | www.hymatik.com | Hvidkaervej 27a, DK-5250 Odense SV, Denmark

Compact Air Motors - 400 Watts

NOTE! All technical data are based on a working pressure of 6 bar and with oil. For oil-free performances are -10 to 15% lower. Speed tolerance accuracy -+10%.



CE II 2D Ex h IIC T4 Gb X
II 2D Ex h IIIC T130°C Db X



Compact reversible motor with keyed shaft, flange

Max power	Free speed*	Nominal speed	Nominal torque	Min starting torque	Air consumption at max power	Conn.	Min pipe ID	Weight	Order Code
[kW]	[rpm]	[rpm]	[Nm]	[Nm]	[l/s]		[mm]	[kg]	
0.400	2300	1150	3.20	4.80	10	G3/8	12	2.80	**P1V-M040C0230**
0.400	1460	730	5.20	7.80	10	G3/8	12	2.80	**P1V-M040C0146**
0.400	540	270	14.00	21.00	10	G3/8	12	3.20	**P1V-M040C0054**
0.400	340	170	22.40	33.60	10	G3/8	12	3.20	**P1V-M040C0034**
0.400	210	105	36.40	54.60	10	G3/8	12	3.20	**P1V-M040C0021**
0.400	120	60	63.60	80**	10	G3/8	12	3.60	**P1V-M040C0012**
0.400	80	40	80**	80**	10	G3/8	12	3.60	**P1V-M040C0008**

* maximum admissible speed (idling) / ** gear box restriction

P1V-M040C0230

M, torque [Nm] P, power [W]

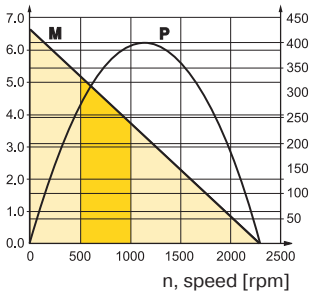

P1V-M040C0146

M, torque [Nm] P, power [W]

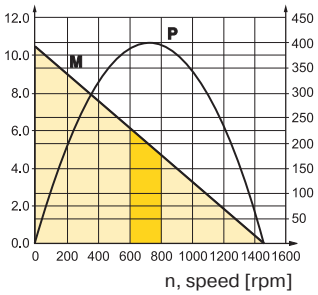

P1V-M040C0054

M, torque [Nm] P, power [W]

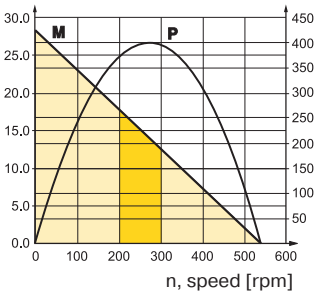

P1V-M040C0034

M, torque [Nm] P, power [W]

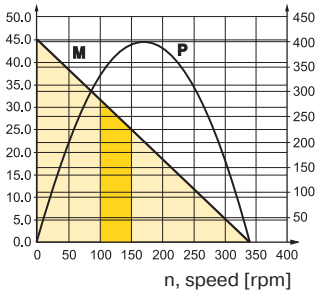

P1V-M040C0021

M, torque [Nm] P, power [W]

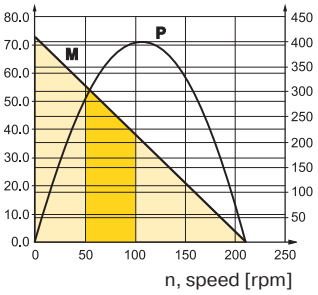

P1V-M040C0012

M, torque [Nm] P, power [W]

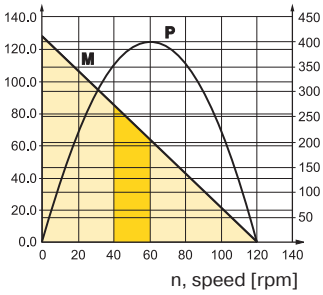

P1V-M040C0008

M, torque [Nm] P, power [W]

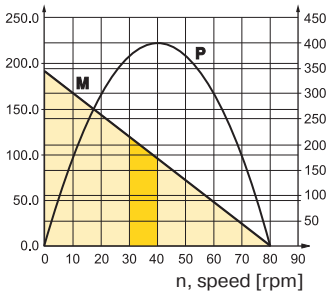

Possible working range of motor.

Optimum working range of motor.

Higher speeds = more vane wear
Lower speeds with high torque = more gearbox wear

Tel: +45 63 12 83 00 | Email: ps@hymatik.com | www.hymatik.com | Hvidkaervej 27a, DK-5250 Odense SV, Denmark

Dimensions [mm] - 400 watts

Motor P1V-M040C

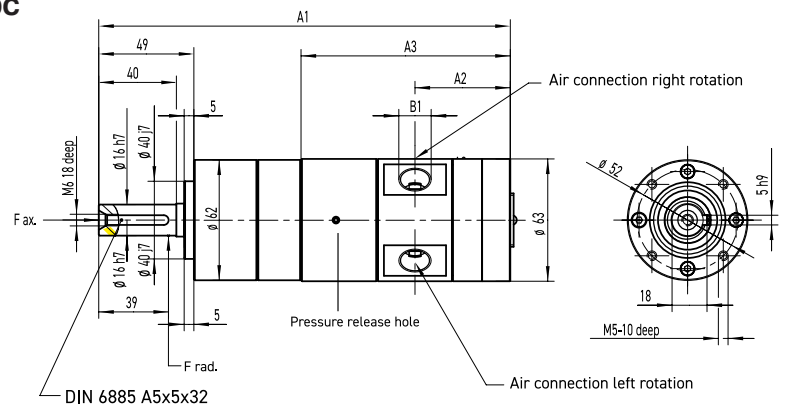

Motors have 2 or 3 openings at the ouside of the gearbox which must stay open in order to guarantee troublefree operation.

Foot bracket
P1V-MF4

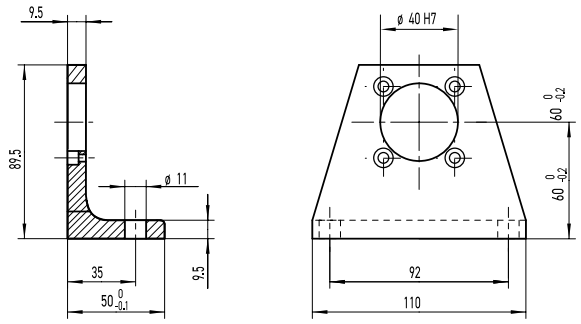

Flanges
P1V-MF8, P1V-MF9

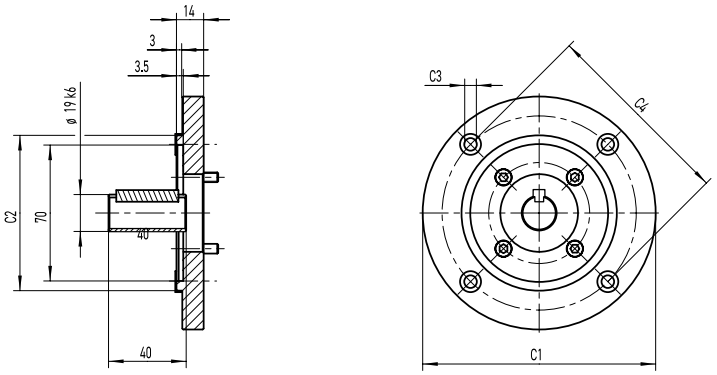

Motor size	Ordering Code			Dimensions (mm)			
				A1	A2	A3	B1
400 watts	P1V-M040C0230	P1V-M040C0034		212.5	49	108	G3/8
	P1V-M040C0146	P1V-M040C0021	P1V-M040C0008	228.5	49	108	G3/8
	P1V-M040C0054	P1V-M040C0012		244	49	105	G3/8

Motor type		Dimensions (mm)			
		C1	C2	C3	C4
P1V-M040C	(IEC80 B5) P1V-MF9	200	130f7	11	165
	(IEC80 B14) P1V-MF8	120	80f7	M6	100

Tel: +45 63 12 83 00 | Email: ps@hymatik.com | www.hymatik.com | Hvidkaervej 27a, DK-5250 Odense SV, Denmark

Compact Air Motors - 600 Watts

NOTE! All technical data are based on a working pressure of 6 bar and with oil. For oil-free performances are -10 to 15% lower. Speed tolerance accuracy -+10%.



CE II 2D Ex h IIC T4 Gb X
II 2D Ex h IIIC T130°C Db X



Compact reversible motor with keyed shaft, flange

Max power	Free speed*	Nominal speed	Nominal torque	Min starting torque	Air consumption at max power	Conn.	Min pipe ID	Weight	Order Code
[kW]	[rpm]	[rpm]	[Nm]	[Nm]	[l/s]		[mm]	[kg]	
0.600	2300	1150	5.00	7.50	15	G3/8	13	3.00	**P1V-M060C0230**
0.600	1460	730	7.80	11.70	15	G3/8	13	3.00	**P1V-M060C0146**
0.600	540	270	21.00	31.50	15	G3/8	13	3.40	**P1V-M060C0054**
0.600	340	170	33.60	50.40	15	G3/8	13	3.40	**P1V-M060C0034**
0.600	210	105	54.50	80**	15	G3/8	13	3.40	**P1V-M060C0021**
0.600	120	60	80**	80**	15	G3/8	13	3.80	**P1V-M060C0012**

* maximum admissible speed (idling) / ** gear box restriction

P1V-M060C0230

M, torque [Nm] P, power [W]

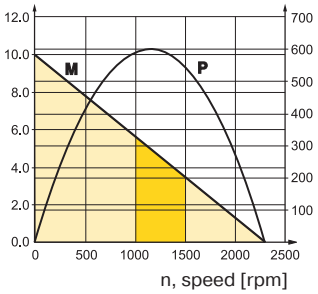

P1V-M060C0146

M, torque [Nm] P, power [W]

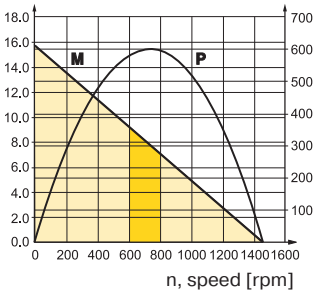

P1V-M060C0054

M, torque [Nm] P, power [W]

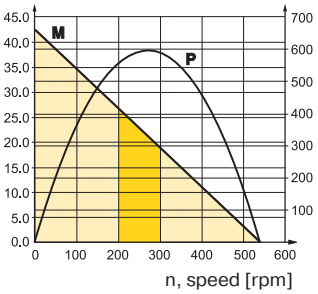

P1V-M060C0034

M, torque [Nm] P, power [W]

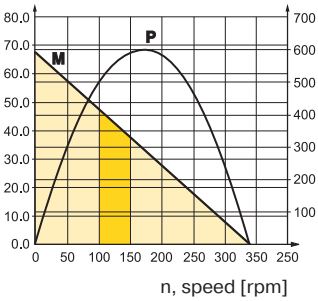

P1V-M060C0021

M, torque [Nm] P, power [W]

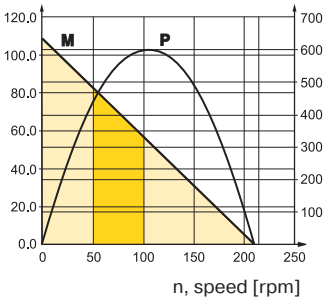

P1V-M060C0012

M, torque [Nm] P, power [W]

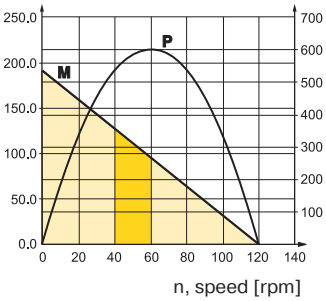

Possible working range of motor.

Optimum working range of motor.
Higher speeds = more vane wear
Lower speeds with high torque = more gearbox wear

Tel: +45 63 12 83 00 | Email: ps@hymatik.com | www.hymatik.com | Hvidkaervej 27a, DK-5250 Odense SV, Denmark

Dimensions [mm] - 600 watts

Motor P1V-M060C

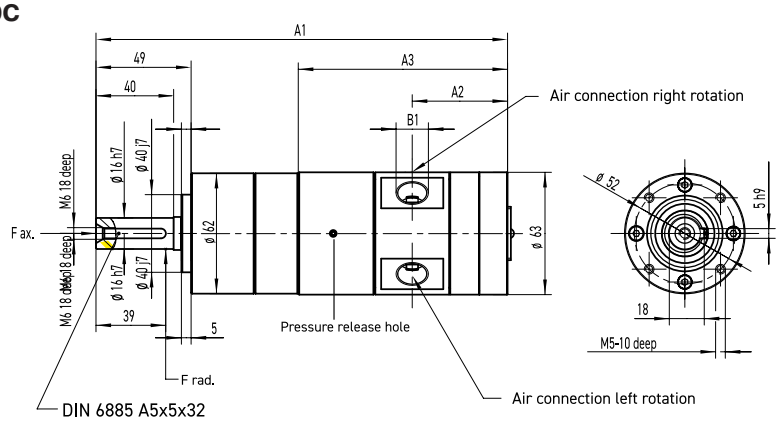

Motors have 2 or 3 openings at the ouside of the gearbox which must stay open in order to guarantee troublefree operation.

Foot bracket
P1V-MF4

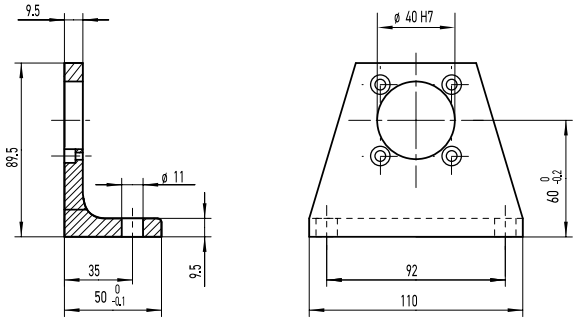

Flanges
P1V-MF8, P1V-MF9

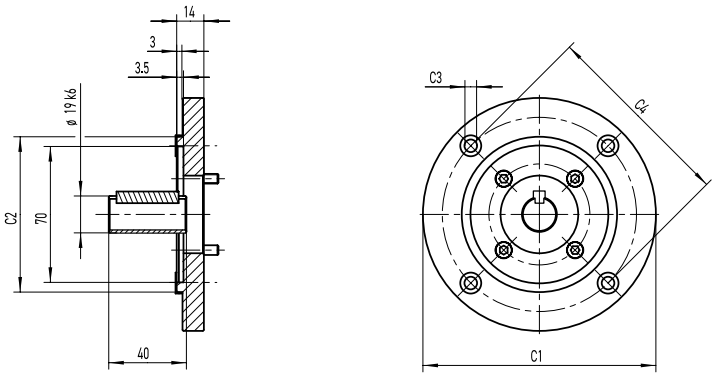

Motor size	Ordering Code			Dimensions (mm)			
				A1	A2	A3	B1
600 watts	P1V-M060C0230	P1V-M060C0034		227.5	56.5	123	G3/8
	P1V-M060C0146	P1V-M060C0021	P1V-M060C0012	243.5	56.5	123	G3/8
	P1V-M060C0054			259	56.5	123	G3/8

Motor type		Dimensions (mm)			
		C1	C2	C3	C4
P1V-M060C	(IEC80 B5) P1V-MF9	200	130f7	11	165
	(IEC80 B14) P1V-MF8	120	80f7	M6	100

Tel: +45 63 12 83 00 | Email: ps@hymatik.com | www.hymatik.com | Hvidkaervej 27a, DK-5250 Odense SV, Denmark

Compact Air Motors - 900 Watts

NOTE! All technical data are based on a working pressure of 6 bar and with oil. For oil-free performances are -10 to 15% lower. Speed tolerance accuracy -+10%.



CE II 2D Ex h IIC T4 Gb X
II 2D Ex h IIIC T130°C Db X



Compact reversible motor with keyed shaft, flange

Max power	Free speed*	Nominal speed	Nominal torque	Min starting torque	Air consumption at max power	Conn.	Min pipe ID	Weight	Order Code
[kW]	[rpm]	[rpm]	[Nm]	[Nm]	[l/s]		[mm]	[kg]	
0.900	2450	1225	7.00	10.50	36.7	G1/8	13	4.90	**P1V-M090C0245**
0.900	1560	780	11.00	16.50	36.7	G1/8	13	4.90	**P1V-M090C0156**
0.900	580	290	30.00	45.00	36.7	G1/8	13	5.60	**P1V-M090C0058**
0.900	360	180	47.00	71.00	36.7	G1/8	13	5.60	**P1V-M090C0036**
0.900	230	115	75.00	112.00	36.7	G1/8	13	5.60	**P1V-M090C0023**
0.900	134	67	120**	120**	36.7	G1/8	13	6.30	**P1V-M090C0013**
0.900	90	45	120**	120**	36.7	G1/8	13	6.30	**P1V-M090C0009**
0.900	40	20	120**	120**	36.7	G1/8	13	6.30	**P1V-M090C0004**

* maximum admissible speed (idling) / ** gear box restriction

P1V-M090C0245

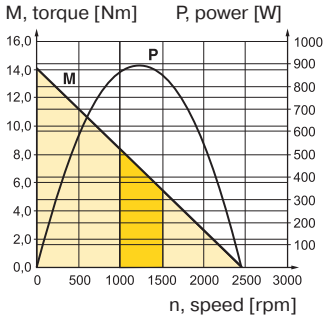

P1V-M090C0156

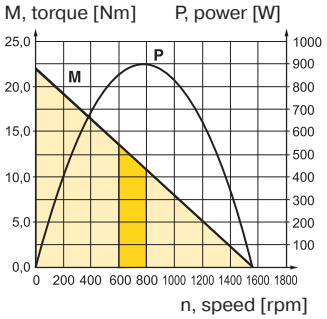

P1V-M090C0058

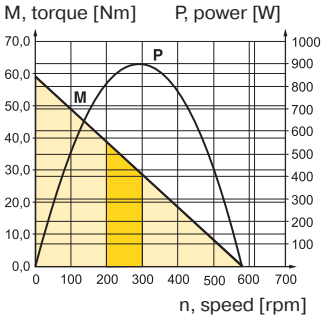

P1V-M090C0036

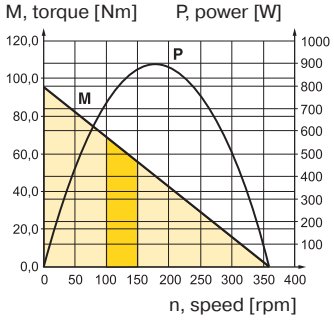

P1V-M090C0023

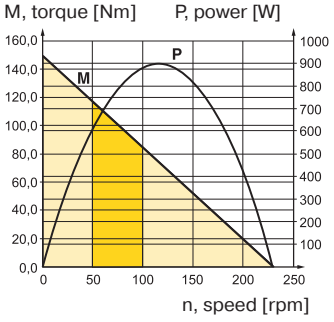

P1V-M090C0013

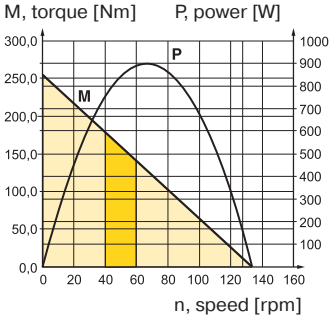

P1V-M090C0009

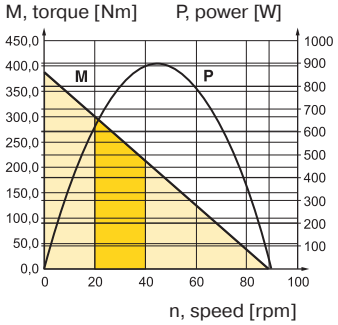

P1V-M090C0004

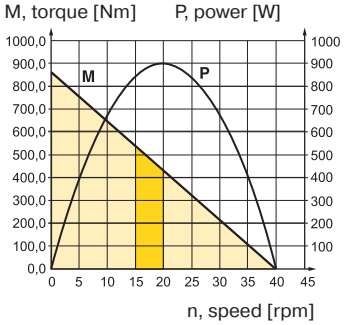

Possible working range of motor.

Optimum working range of motor.
Higher speeds = more vane wear
Lower speeds with high torque = more gearbox wear

Tel: +45 63 12 83 00 | Email: ps@hymatik.com | www.hymatik.com | Hvidkaervej 27a, DK-5250 Odense SV, Denmark

Dimensions [mm] - 900 watts

Motor P1V-M090C

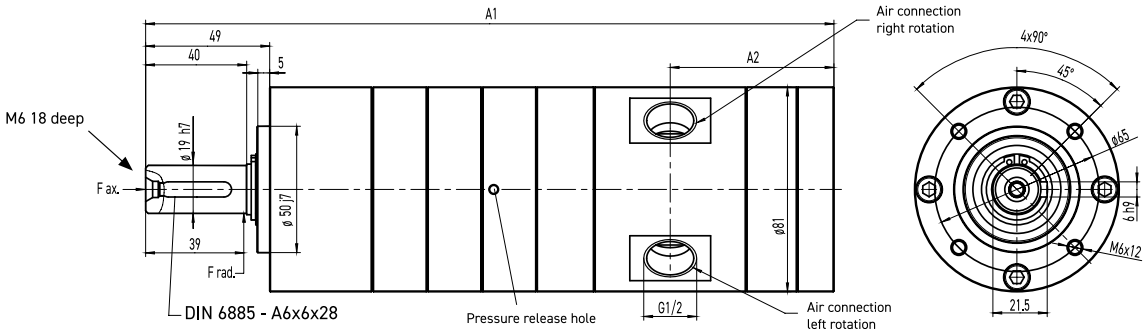

Motors have 2 or 3 openings at the ouside of the gearbox which must stay open in order to guarantee troublefree operation.

Foot bracket
P1V-MF5

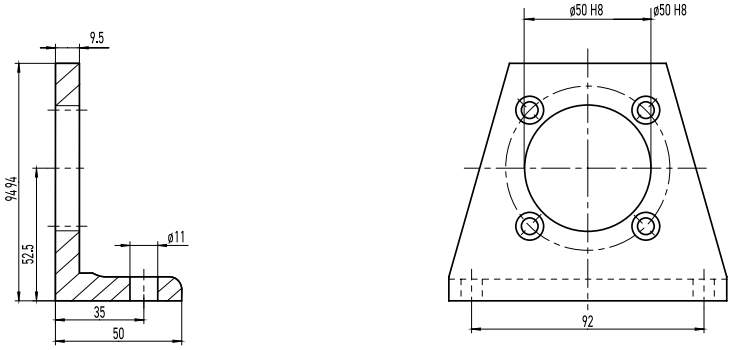

Flanges
P1V-MF6, P1V-MF7

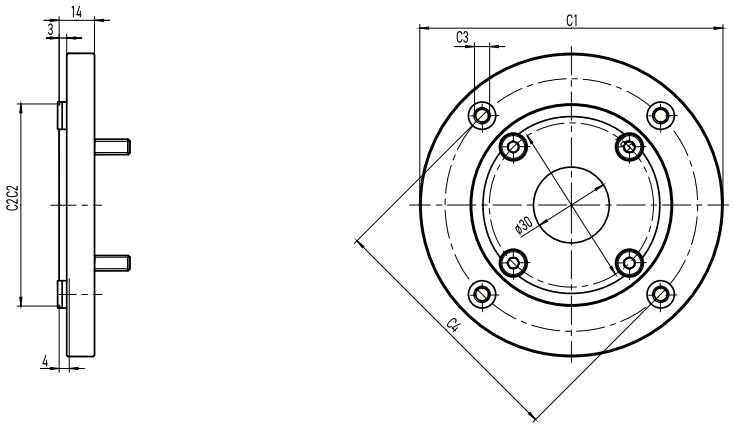

Motor size	Ordering Code			Dimensions (mm)	
				A1	A2
900 watts	P1V-M090C0245	P1V-M090C0156		209	55
	P1V-M090C0058	P1V-M090C0036	P1V-M090C0023	231	55
	P1V-M090C0013	P1V-M090C0009	P1V-M090C0004	252.5	55

Motor type		Dimensions (mm)			
		C1	C2	C3	C4
P1V-M090C	(IEC80 B5) P1V-MF7	200	130f7	11	165
	(IEC80 B14) P1V-MF6	120	80f7	M6	100

Tel: +45 63 12 83 00 | Email: ps@hymatik.com | www.hymatik.com | Hvidkaervej 27a, DK-5250 Odense SV, Denmark

Compact Air Motors - 1200 Watts

NOTE! All technical data are based on a working pressure of 6 bar and with oil. For oil-free performances are -10 to 15% lower. Speed tolerance accuracy -+10%.



CE II 2D Ex h IIC T4 Gb X
II 2D Ex h IIIC T130°C Db X



Compact reversible motor with keyed shaft, flange

Max power	Free speed*	Nominal speed	Nominal torque	Min starting torque	Air consumption at max power	Conn.	Min pipe ID	Weight	Order Code
[kW]	[rpm]	[rpm]	[Nm]	[Nm]	[l/s]		[mm]	[kg]	
1.20	2450	1225	9.40	14.00	43.3	G1/2	13	5.60	**P1V-M120C0245**
1.20	1560	780	14.70	22.00	43.3	G1/2	13	5.60	**P1V-M120C0156**
1.20	580	290	40.00	60.00	43.3	G1/2	13	6.30	**P1V-M120C0058**
1.20	360	180	63.00	94.00	43.3	G1/2	13	6.30	**P1V-M120C0036**
1.20	230	115	100.00	120**	43.3	G1/2	13	6.30	**P1V-M120C0023**

* maximum admissible speed (idling) / ** gear box restriction

P1V-M120C0245

M, torque [Nm] P, power [W]

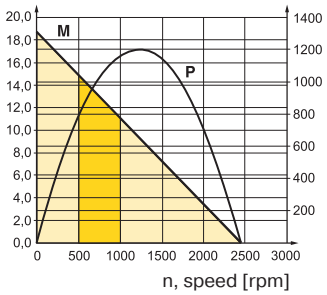

P1V-M120C0156

M, torque [Nm] P, power [W]

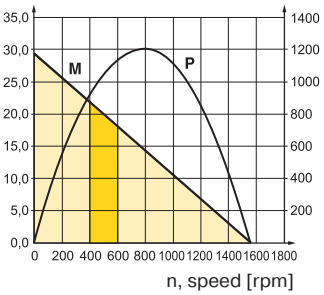

P1V-M120C0058

M, torque [Nm] P, power [W]

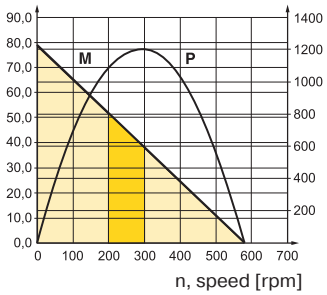

P1V-M120C0036

M, torque [Nm] P, power [W]

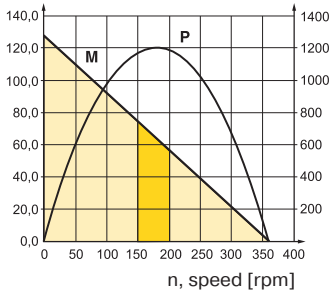

P1V-M120C0023

M, torque [Nm] P, power [W]

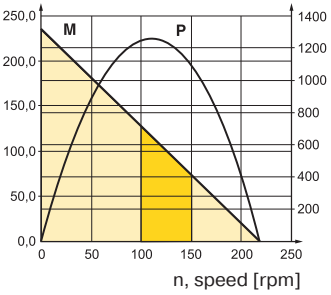

Possible working range of motor.

Optimum working range of motor.
Higher speeds = more vane wear
Lower speeds with high torque = more gearbox wear

Tel: +45 63 12 83 00 | Email: ps@hymatik.com | www.hymatik.com | Hvidkaervej 27a, DK-5250 Odense SV, Denmark

Dimensions [mm] - 1200 watts

Motor P1V-M120C

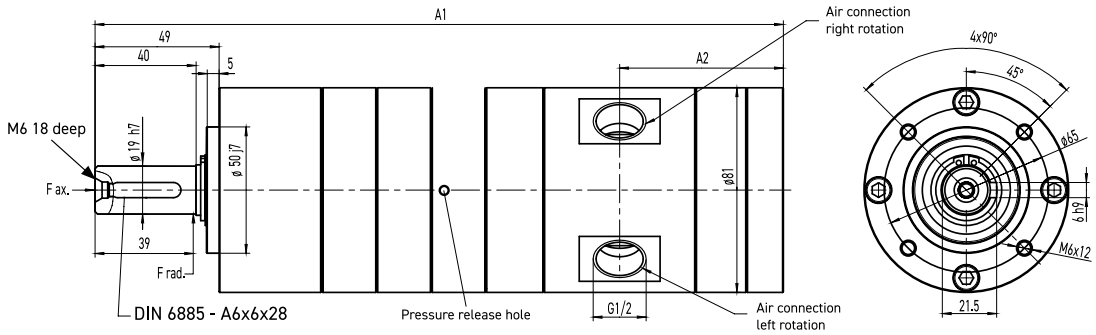

Motors have 2 or 3 openings at the ouside of the gearbox which must stay open in order to guarantee troublefree operation.

Foot bracket
P1V-MF5

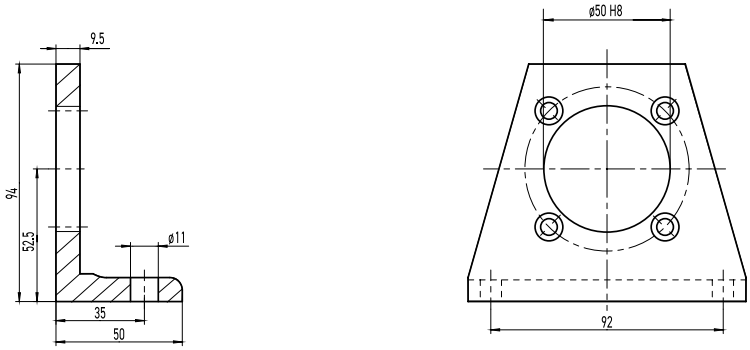

Flanges
P1V-MF6, P1V-MF7

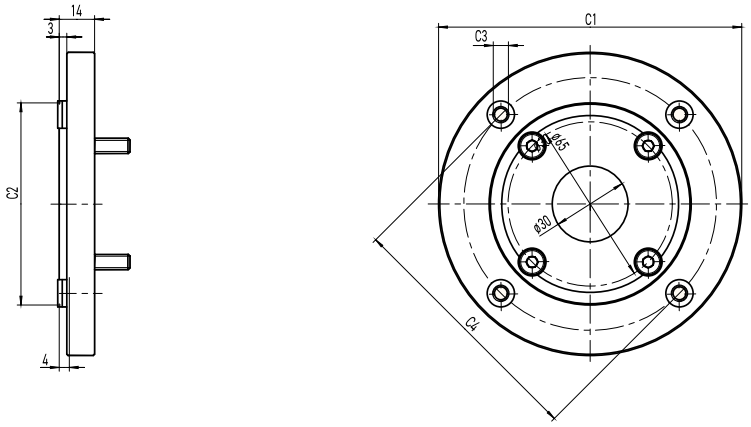

Motor size	Ordering Code			Dimensions (mm)	
				A1	A2
1200 watts	P1V-M120C0245	P1V-M120C0156		229	65
	P1V-M120C0058	P1V-M120C0036	P1V-M120C0023	251	65

Motor type		Dimensions (mm)			
		C1	C2	C3	C4
P1V-M120C	(IEC80 B5) P1V-MF7	200	130f7	11	165
	(IEC80 B14) P1V-MF6	120	80f7	M6	100

Tel: +45 63 12 83 00 | Email: ps@hymatik.com | www.hymatik.com | Hvidkaervej 27a, DK-5250 Odense SV, Denmark

Permissible forces air motors with gear boxes

Max. permitted load on output shaft for basic motors (based on 10,000 rpm at input shaft with 90 % probable service life for ball bearings).

a (mm)	Radial force (N)	Axial force (N)
Motors P1V-M020C0230, P1V-M020C0146		
39	240	50
Motors P1V-M020C0054, P1V-M020C0034, P1V-M020C0021		
39	360	70
Motors P1V-M020C0012, P1V-M020C0008,P1V-M020C0003		
39	520	120

Motors P1V-M040C0230, P1V-M040C0146		
39	240	50
Motors P1V-M040C0054, P1V-M040C0034, P1V-M040C0021		
39	360	70
Motors P1V-M040C0012, P1V-M040C		
39	520	120

Motors P1V-M060C0230, P1V-M060C0146		
39	240	50
Motors P1V-M060C0054, P1V-M060C0034, P1V-M060C0021		
39	360	70
Motors P1V-M060C0012		
39	520	120

Motors P1V-M090C0245, P1V-M090C0156		
39	400	80
Motors P1V-M090C0058, P1V-M090C0036, P1V-M090C0023		
39	600	120
Motors P1V-M090C0013, P1V-M090C0009, P1V-M090C0004		
39	1000	200

Motors P1V-M120C0245, P1V-M120C0156		
39	400	80
Motors P1V-M120C0058, P1V-M120C0036, P1V-M120C0023		
39	600	120

Permissible forces air motors without gear boxes

	a (mm)	Radial force (N)	Axial force (N)
P1V-M020B	8	145	0
P1V-M040B	8	145	0
P1V-M060B	8	145	0
P1V-M090B	9	145	0
P1V-M120B	9	145	0

Frad = Radial loading (N)
Fax = Axial loading (N)

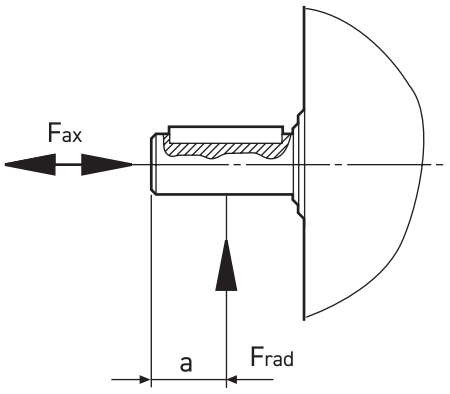

Loads on output shaft for basic motor with shaft with key slot.

Tel: +45 63 12 83 00 | Email: ps@hymatik.com | www.hymatik.com | Hvidkaervej 27a, DK-5250 Odense SV, Denmark

SERVICE

Easier – Faster – Cheaper

Replacing vanes - step by step.

Step 1.
Remove the rear piece.

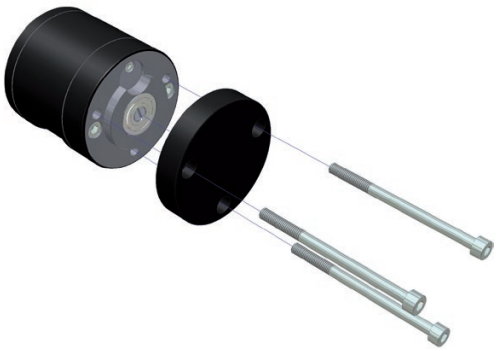

Step 2.
Remove the inspection plug.

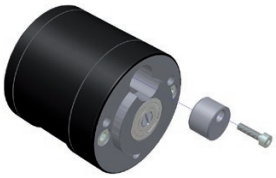

Step 3.
Use a screwdriver to rotate the motor until you can see a vane in the centre of the inspection hole.

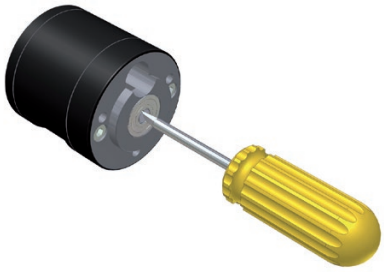

Step 4.
Remove the old vane and replace it with a new one.

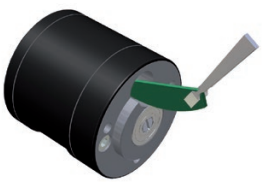

Repeat steps 3 and 4 until all the vanes have been replaced.

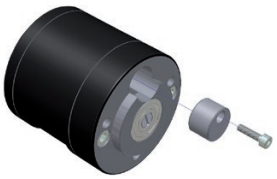

Step 5.
Replace the inspection plug.

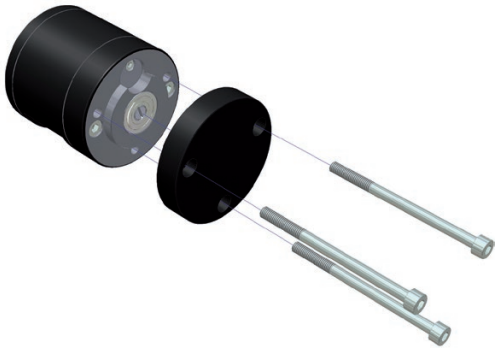

Step 6.
Replace the rear piece.

Replacing vanes with motor still fitted to the machine
The P1V-M motor has been developed to allow the vanes to be replaced without the need to remove the motor from the machine. This makes vane replacement easier, quicker and cheaper, while minimising stoppages.

Tel: +45 63 12 83 00 | Email: ps@hymatik.com | www.hymatik.com | Hvidkaervej 27a, DK-5250 Odense SV, Denmark

LUBRICATION AND SERVICE LIFE

Air motor	Dimensions on new vanes X [mm]	Minimum dimensions on vane X [mm]
P1V-M020	8.5	6.5
P1V-M040	7.0	5.0
P1V-M060	8.0	6.0
P1V-M090	X	X
P1V-M120	X	X

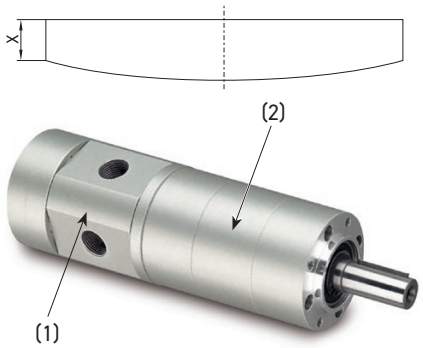

SPARE PARTS

	Spare parts Order Code	
Motor	**Air Motor (1)**	**Gear Box (2)**
P1V-M020C0230	**P1V-M/202193A**	**P1V-M/202202B**
P1V-M020C0146	**P1V-M/202193A**	**P1V-M/202202D**
P1V-M020C0054	**P1V-M/202193A**	**P1V-M/202202G**
P1V-M020C0034	**P1V-M/202193B**	**P1V-M/202202C**
P1V-M020C0021	**P1V-M/202193B**	**P1V-M/202202E**
P1V-M020C0012	**P1V-M/202193B**	**P1V-M/202202F**
P1V-M020C0008	**P1V-M/202193B**	**P1V-M/202202H**
P1V-M020C0003	**P1V-M/202193B**	**P1V-M/202202I**
Motor	**Air Motor (1)**	**Gear Box (2)**
P1V-M040C0230	**P1V-M/202194A**	**P1V-M/202202B**
P1V-M040C0146	**P1V-M/202194A**	**P1V-M/202202D**
P1V-M040C0054	**P1V-M/202194A**	**P1V-M/202202G**
P1V-M040C0034	**P1V-M/202194B**	**P1V-M/202202C**
P1V-M040C0021	**P1V-M/202194B**	**P1V-M/202202E**
P1V-M040C0012	**P1V-M/202194B**	**P1V-M/202202F**
P1V-M040C0008	**P1V-M/202194B**	**P1V-M/202202H**
Motor	**Air Motor (1)**	**Gear Box (2)**
P1V-M060C0230	**P1V-M/202179A**	**P1V-M/202202B**
P1V-M060C0146	**P1V-M/202179A**	**P1V-M/202202D**
P1V-M060C0054	**P1V-M/202179A**	**P1V-M/202202G**
P1V-M060C0034	**P1V-M/202179B**	**P1V-M/202202C**
P1V-M060C0021	**P1V-M/202179B**	**P1V-M/202202E**
P1V-M060C0012	**P1V-M/202179B**	**P1V-M/202202F**
Motor	**Air Motor (1)**	**Gear Box (2)**
P1V-M090C0245	**P1V-M/202409A**	**P1V-M/807015B**
P1V-M090C0156	**P1V-M/202409B**	**P1V-M/807015C**
P1V-M090C0058	**P1V-M/202409A**	**P1V-M/807015D**
P1V-M090C0036	**P1V-M/202409B**	**P1V-M/807015E**
P1V-M090C0023	**P1V-M/202409B**	**P1V-M/807015F**
P1V-M090C0013	**P1V-M/202409A**	**P1V-M/807015G**
P1V-M090C0009	**P1V-M/202409B**	**P1V-M/807015H**
P1V-M090C0004	**P1V-M/202409B**	**P1V-M/807015I**
Motor	**Air Motor (1)**	**Gear Box (2)**
P1V-M120C0245	**P1V-M/202457A**	**P1V-M/807015B**
P1V-M120C0156	**P1V-M/202457B**	**P1V-M/807015C**
P1V-M120C0058	**P1V-M/202457A**	**P1V-M/807015D**
P1V-M120C0036	**P1V-M/202457B**	**P1V-M/807015E**
P1V-M120C0023	**P1V-M/202457B**	**P1V-M/807015F**

Tel: +45 63 12 83 00 | Email: ps@hymatik.com | www.hymatik.com | Hvidkaervej 27a, DK-5250 Odense SV, Denmark

SERVICE KITS

The following kits are available for the basic motors, consisting of vanes.

Service kits, vanes for intermittent lubrication operation, option "0"

For motors	Order Code
P1V-M020	**P1V-6/4449144B**
P1V-M040	**P1V-6/4462981A**
P1V-M060	**P1V-6/4462991A**
P1V-M090	**P1V-6/4449171A**
P1V-M120	**P1V-6/4449181A**



The following kits are available for the basic motors, consisting of vanes and springs.

Service kits, vanes for intermittent lubrication operation, option "Z"

For motors	Order Code
P1V-M020	**not available**
P1V-M040	**P1V-6/4449154B**
P1V-M060	**P1V-6/4449164B**
P1V-M090	**P1V-6/4449174B**
P1V-M120	**P1V-6/4449184B**



*The following normal service intervals should be applied to in order to guarantee problem-free operation in air motors working at load speeds. The specified hours of operation apply when the motor is running at the speed corresponding to maximum power (load speed). This is approximately half free speed. If the motor operates at higher speeds, the service interval is shorter. If the motor operates at lower speeds, the service interval is longer.

Tel: +45 63 12 83 00 | Email: ps@hymatik.com | www.hymatik.com | Hvidkaervej 27a, DK-5250 Odense SV, Denmark

P1V-A HEAVY DUTY AIR MOTORS

Contents

Page

General 49
Technical data 50
Air Motors 1600 to 18000 watts 51
Dimensions 1600 to 18000 watts 60
Choice of an air motor with gear 66

Air Motors with planetary gear boxes
Technical data 68
Dimensions 69

Air Motors with helical (spur) gear boxes
Technical data 70
Dimensions 71

Air Motors with worm gear boxes
Technical data 74
Dimensions ..... .75
Lubrication and service life 82
Service Kits 82
Order key 83



Tel: +45 63 12 83 00 | Email: ps@hymatik.com | www.hymatik.com | Hvidkaervej 27a, DK-5250 Odense SV, Denmark

Air Motors

P1V-A is a range of reversible air motors intended for heavy and demanding applications. The motor housings are made from painted cast iron, and the components sealed to permit operation in damp and dirty environments. The range contains 6 different sizes with power ratings of 1600 to 18 000 Watts. The basic motors can be supplied with built-in gearboxes, either planetary, helical or worm drives, to provide the correct speed of rotation and torque, and the correct installation mountings.

Basic motors

All pneumatic motors have very good starting and low speed running characteristics. They are also equipped with vanes for intermittent or permanent oil lubrification as standard.

The simple construction of the motors makes them very reliable, with long service life and they are easy to service. Motors with planetary gears A P1V-A combined with a planetary gear has small installation dimensions, low weight in relation to performance, free installation position, EIC flange mounting as standard, in line output shaft and high efficiency.

Motors with helical gears

A P1V-A combined with a helical gear has high efficiency, simple installation with flange or foot, and competitive pricing. Oil-bath gears mean that the installation position must be decided beforehand. The installation position governs the amount of oil in the gear and the location of filling and drain plugs.

Motors with worm gears

A P1V-A combined with a worm drive gear has the following characteristics: gearboxes with high gear ratios are self-locking, which means that they can be used to maintain the output shaft in position, simple installation with the flange on the left or right sides or with a foot, small installation dimensions and competitive pricing. Oil-bath gears mean that the installation position must be decided beforehand. The installation position governs the amount of oil in the gear and the location of filling and drain plugs.

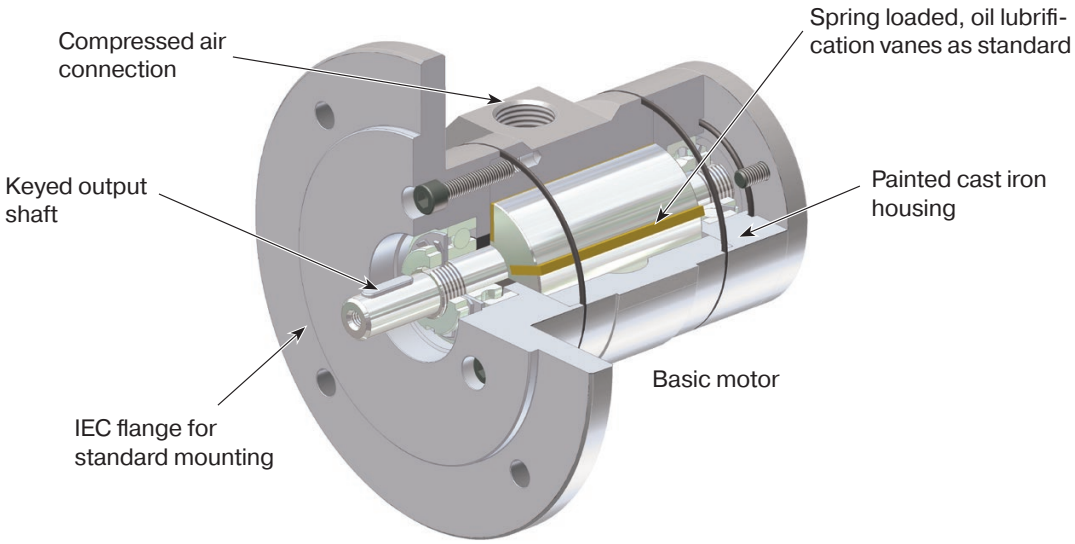

With planetary gear

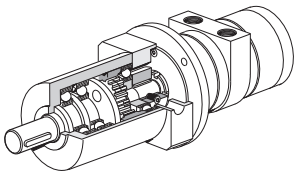

With helical gear

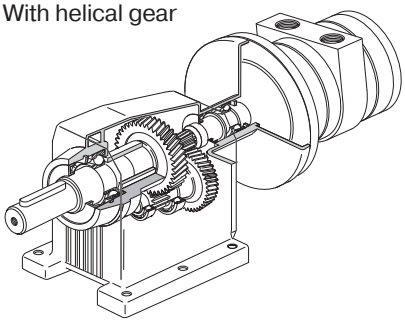

With worm gear

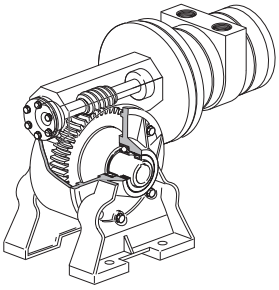

Tel: +45 63 12 83 00 | Email: ps@hymatik.com | www.hymatik.com | Hvidkaervej 27a, DK-5250 Odense SV, Denmark

TECHNICAL DATA

Note:
All technical data are based on a working pressure of 6 bar and with oil. Speed tolerance accuracy in between clock and anti-clockwise directions is ±10%.

Air motor size & type	P1V-A160	P1V-A320	P1V-A500	P1V-A600	P1V-A900	P1V-AJ00
Nominal power (watts)	1600	3200	5000	6000	9000	18000
Working pressure (bar)	3 to 7/6 in explosive atmosphere					
Working temperature (°C)	-20 to +110 without gear					
Ambient temperature (°C)	-20 to +40 in explosive atmosphere without gear					
Air flow required (Nl/min)	1900	3900	5800	7900	10000	20000
Min pipe ID, inlet (mm)	15	19	25	25	25	43
Min pipe ID, outlet (mm)	19	25	32	32	32	63.5
Choice of treatment unit: recommended min air flow (l/min) at p1 7.5 bar and 0.8 bar pressure drop						
Air flow [l/mn]	2090	4290	4380	8690	11000	22000
Choice of valve: recommended min nominal air flow (l/min) at p1 6 bar and 1 bar pressure drop						
Air flow [l/mn]	2185	4485	6670	9085	11500	23000
Medium	40 µm filtered, oil mist or dry unlubricated compressed air					
Oil operation	1-2 drop per cube meter, ISO8573-1 purity class 3.-.5					
Recommended oil	ISO 8573-1 purity class 3.-.5					
Sound level free outlet (dB(A))	125	123	190	122	-	-
With outlet silencer (dB(A))	Consult your local technical support					

Note: sound levels are measured at free speed with the measuring instrument positioned 1 meter away from the air motor at an height of 1 meter.

Material specification

Air motor size & type	P1V-A160	P1V-A320	P1V-A500	P1V-A600	P1V-A900	P1V-AJ00
	Without gear box option					
Motor housing	Cast iron, synthetic paint, grey color					
Shaft	High grade steel					
Key	High grade steel					
External seal	Nitrile rubber, NBR					
Internal parts	High grade steel					
Internal seals	Nitrile rubber, NBR					
Vanes	Patented material, no public data					
Screws	Zinc coated steel					
	With gear box option, common data					
Housing	Alloy steel, synthetic paint, silver grey color				-	-
Shaft	High grade steel				-	-
Shafts key	Hardened steel				-	-
Shafts seal	Nitrile rubber, NBR				-	-
Screws	Zinc coated steel				-	-
	With planetary gear box option					
Housing	Alloy steel, synthetic paint, silver grey color				-	-
	With helical (spur) gear box option					
Housing	Aluminium or cast iron, synthetic paint, silver grey color				-	-
	With worm gear box option					
Housing	Aluminium or cast iron, synthetic paint, silver grey color				-	-
Internal pinion	Chili cast phosphor bronze				-	-
Worm	Alloyed, hardened steel				-	-

Tel: +45 63 12 83 00 | Email: ps@hymatik.com | www.hymatik.com | Hvidkaervej 27a, DK-5250 Odense SV, Denmark

Holding Brakes

Holding brakes are designed for the motors without gear box and can be ordered fully mounted on or added on later. The brake is fixed on the front of the motor.

Motor type	Order Code	Brake torque [Nm]
P1V-A160A0900	**P1V-A/445709B**	*
P1V-A320A0700	**P1V-A/446196A**	*
P1V-A320D0300		*
P1V-A320B0140		*
P1V-A500A0600	**P1V-A/446062A**	*
P1V-A500D0300		*
P1V-A500B0145		*

*) The braking torque is generally double the nominal torque. The holding brake is not designed for use with a different drive system. Please only use it in combination with the stated motor types.

For ATEX conformity, please contact Technical Sales.

Dimensions (mm)

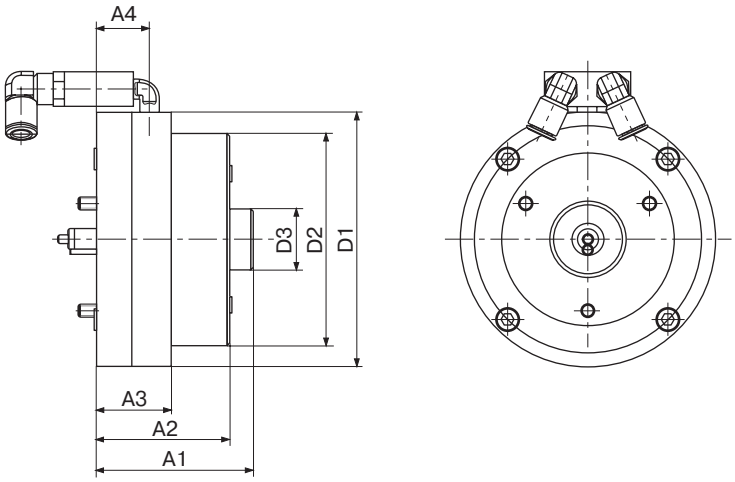

	Dimensions of the braking device (mm)						
Order code	**A1**	**A2**	**A3**	**A4**	**D1**	**D2**	**D3**
P1V-A/445709B	72.5	61.5	34.5	24.5	118	98	28
P1V-A/445711B	107	98	43.5	35.5	190	162	28
P1V-A/445713B	107	98	43.5	35.5	190	162	28

Tel: +45 63 12 83 00 | Email: ps@hymatik.com | www.hymatik.com | Hvidkaervej 27a, DK-5250 Odense SV, Denmark

NOTE! All technical data are based on a working pressure of 6 bar and with oil. For oil-free performances are -10 to 15% lower. Speed tolerance accuracy -+10%.

Powers 1,6, 3,2, 5 & 6 kW

CE Ex II 2G Ex h IIC T3 Gb X
Ex II 2D Ex h IIC T195° Db X

Powers 9 & 18 kW

CE Ex II 2G Ex h IIC T4 Gb X
Ex II 2D Ex h IIC T130° Db X

Note! Inlet and exhaust air flows are critical for reaching the best performances.

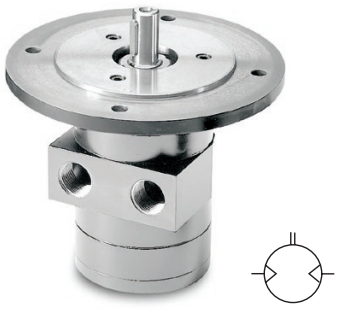

A: Basic reversible motor without gear box (A), IEC flange, ATEX, with planetary (B) or spur (D) gear boxes

Max power	Free speed	Nominal speed	Nominal torque	Min starting torque	Air consumption	Con-nection	Min pipe ID	Weight	Moun-ting	Max permis-sible shaft loading		At A2/2	Gear box type	Order Code
[kW]	[rpm]	[rpm]	[Nm]	[Nm]	[l/s]		[mm]	[kg]	Flange	F radial [N]	F axial [N]	[mm]		
1600	9000	4500	3.4	5.1	31.7	G1/2	15/19	5.2	IEC71	1000	600	15.0	Without	**P1V-A160A0900**
1600	3000	1500	10.2	15.3	31.7	G1/2	15/19	9.5	IEC80	550	1500	20.0	Spur	**P1V-A160D0300**
1600	1400	700	21.8	32.7	31.7	G1/2	15/19	9.5	IEC80	1200	880	20.0	Helical	**P1V-A160B0140**
3200	7000	3500	8.7	13.1	65.0	G3/4	19/25	10.3	IEC80	1400	700	20.0	Without	**P1V-A320A0700**
3200	3000	1500	20.4	30.6	65.0	G3/4	19/25	15.4	IEC90	800	1450	25.0	Spur	**P1V-A320D0300**
3200	1400	700	43.7	65.5	65.0	G3/4	19/25	13.6	IEC90	1600	1350	25.0	Helical	**P1V-A320B0140**
5000	6000	3000	15.9	23.9	96.7	G1	25/32	17.0	IEC90	1900	900	25.0	Without	**P1V-A500A0600**
5000	3000	1500	31.8	47.7	96.7	G1	25/32	25.8	IEC100	1250	950	30.0	Spur	**P1V-A500D0300**
5000	1450	725	65.9	98.8	96.7	G1	25/32	26.8	IEC100	2650	1150	30.0	Helical	**P1V-A500B0145**
6000	7000	3500	16.4	24.6	131.7	G1	25/32	17.0	IEC90	1900	900	25.0	Without	**P1V-A600A0700**
6000	3500	1750	32.7	49.1	131.7	G1	25/32	25.8	IEC100	1250	950	30.0	Spur	**P1V-A600D0350**
6000	1600	800	71.6	107.4	131.7	G1	25/32	26.8	IEC100	2650	1150	30.0	Helical	**P1V-A600B0160**
9000	6000	3000	28.6	43.0	166.7	G1	25/32	33.0	IEC112A	7500	1100	30.0	Without	**P1V-A900A0600**
18000	6000	3000	57.3	85.9	333.3	G2	43/63.5	54.0	IEC112A	7500	1100	30.0	Without	**P1V-AJ00A0600**

Maximum admissible speed (idling)
Air consumption at the maximum air motor power

Permitted shaft loadings

Max permitted load on output shaft for basic motors (based on 10,000,000 revolutions of the output shaft, with 90% probable service life for ball bearings.

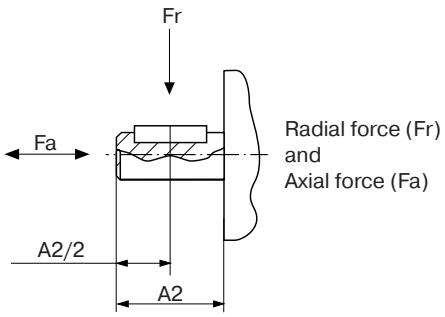

Tel: +45 63 12 83 00 | Email: ps@hymatik.com | www.hymatik.com | Hvidkaervej 27a, DK-5250 Odense SV, Denmark

P1V-A160A0900

Technical data

Max. power [Watt]	1600
Free speed [rpm]	9000
Nominal speed [rpm]	4500
Nominal torque [Nm]	3.4
Min. starting torque [Nm]	5.1
Stall torque [Nm]	6.5
Working pressure [bar]	3 to 7*
Air consumption [l/s]	31.7
Min pipe ID inlet/outlet [mm]	15 / 19
Connection [BSPP]	G1/2
Working temperature	-20° to +110°C -20 to +40°C in explosive atmosphere
Weight [kg]	5.2
Flange mounting	IEC71
Gear box type	None
Max. shaft radial force [N]	1000
Max. shaft axial force [N]	600
At A2/2 [mm]	15

* 6 in explosive atmosphere

Torque & speed curves/ Air Motor Power

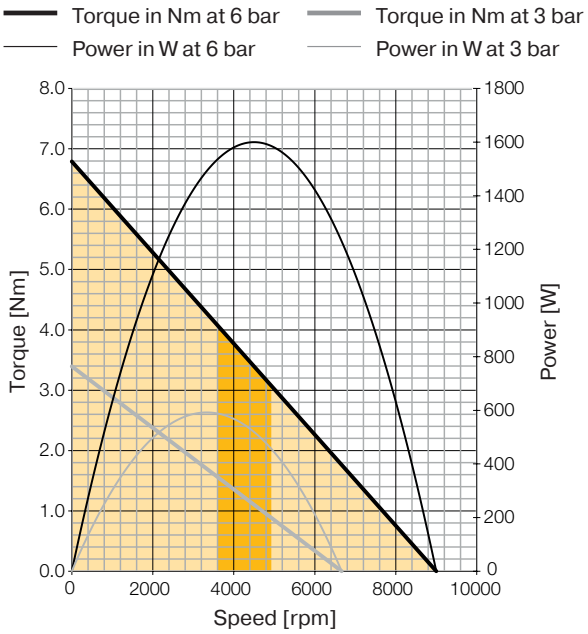

Optimum working speed range [rpm] 4500 to 3600
Optimum working torque range [Nm] 3.4 to 4.1

P1V-A160D0300

Technical data

Max. power [Watt]	1600
Free speed [rpm]	3000
Nominal speed [rpm]	1500
Nominal torque [Nm]	10.2
Min. starting torque [Nm]	15.3
Stall torque [Nm]	19.4
Working pressure [bar]	3 to 7*
Air consumption [l/s]	31.7
Min pipe ID inlet/outlet [mm]	15 / 19
Connection [BSPP]	G1/2
Working temperature	-20° to +110°C -20 to +40°C in explosive atmosphere
Weight [kg]	9.5
Flange mounting	IEC80
Gear box type	Spur
Max. shaft radial force [N]	550
Max. shaft axial force [N]	1500
At A2/2 [mm]	20

* 6 in explosive atmosphere

Torque & speed curves / Air Motor Power

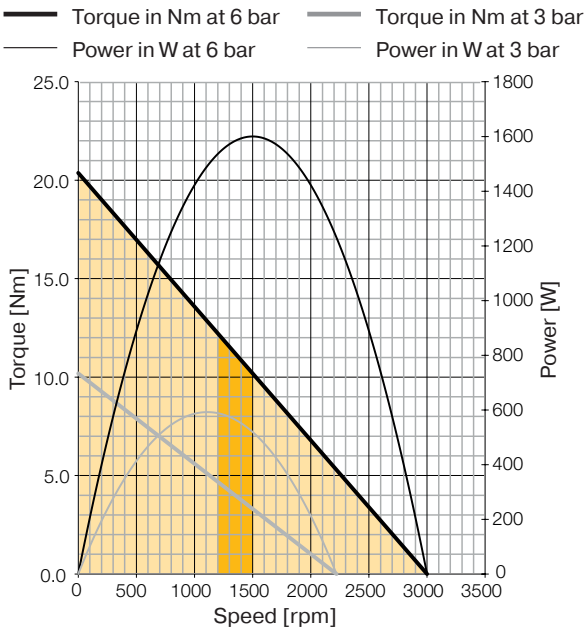

Optimum working speed range [rpm] 1500 to 1200
Optimum working torque range [Nm] 10.2 to 12.2

Tel: +45 63 12 83 00 | Email: ps@hymatik.com | www.hymatik.com | Hvidkaervej 27a, DK-5250 Odense SV, Denmark

P1V-A160B0140

Technical data

Max. power [Watt]	1600
Free speed [rpm]	1400
Nominal speed [rpm]	700
Nominal torque [Nm]	21.8
Min. starting torque [Nm]	32.7
Stall torque [Nm]	41.5
Working pressure [bar]	3 to 7*
Air consumption [l/s]	31.7
Min pipe ID inlet/outlet [mm]	15 / 19
Connection [BSPP]	G1/2
Working temperature	-20° to +110°C -20 to +40°C in explosive atmosphere
Weight [kg]	9.5
Flange mounting	IEC80
Gear box type	Planetary
Max. shaft radial force [N]	1200
Max. shaft axial force [N]	900
At A2/2 [mm]	20

* 6 in explosive atmosphere

Torque & speed curves/ Air Motor Power

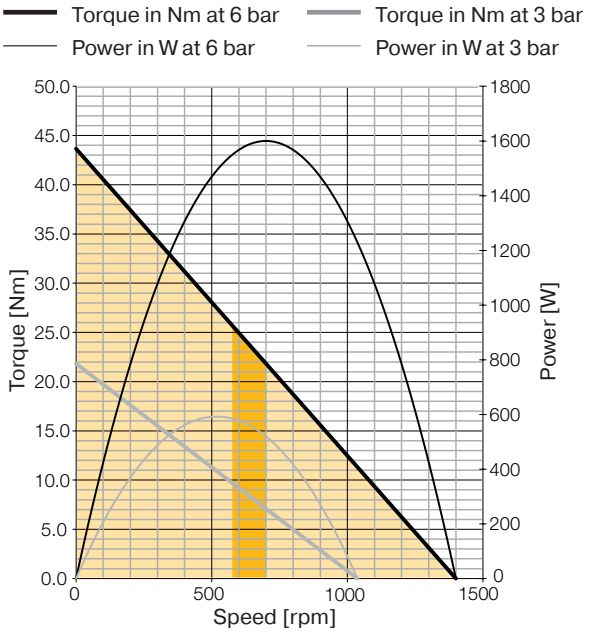

Optimum working speed range [rpm] 700 to 560
Optimum working torque range [Nm] 21.8 to 26.2

P1V-A320A0700

Technical data

Max. power [Watt]	3200
Free speed [rpm]	7000
Nominal speed [rpm]	3500
Nominal torque [Nm]	8.7
Min. starting torque [Nm]	13.1
Stall torque [Nm]	16.6
Working pressure [bar]	3 to 7*
Air consumption [l/s]	65.0
Min pipe ID inlet/outlet [mm]	19 / 25
Connection [BSPP]	G3/4
Working temperature	-20° to +110°C -20 to +40°C in explosive atmosphere
Weight [kg]	10.3
Flange mounting	IEC80
Gear box type	None
Max. shaft radial force [N]	1400
Max. shaft axial force [N]	700
At A2/2 [mm]	20

* 6 in explosive atmosphere

Torque & speed curves / Air Motor Power

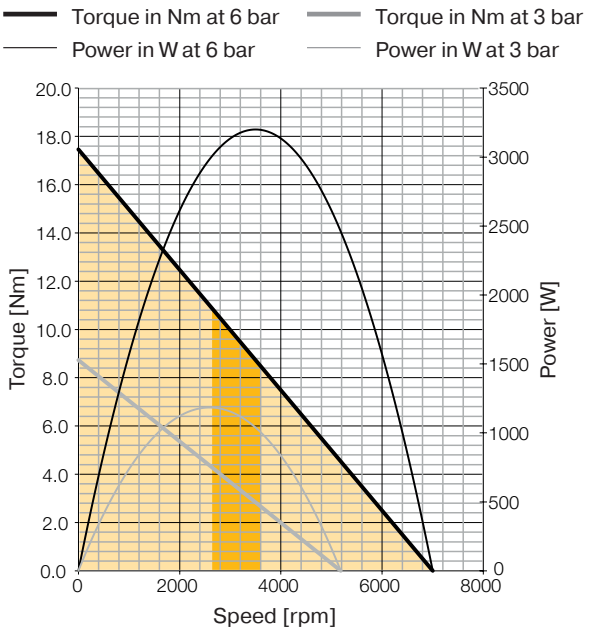

Optimum working speed range [rpm] 3500 to 2800
Optimum working torque range [Nm] 8.7 to 10.5

Tel: +45 63 12 83 00 | Email: ps@hymatik.com | www.hymatik.com | Hvidkaervej 27a, DK-5250 Odense SV, Denmark

P1V-A320D0300

Technical data

Max. power [Watt]	3200
Free speed [rpm]	3000
Nominal speed [rpm]	1500
Nominal torque [Nm]	20.4
Min. starting torque [Nm]	30.6
Stall torque [Nm]	38.7
Working pressure [bar]	3 to 7*
Air consumption [l/s]	65.0
Min pipe ID inlet/outlet [mm]	19 / 25
Connection [BSPP]	G3/4
Working temperature	-20° to +110°C -20 to +40°C in explosive atmosphere
Weight [kg]	15.4
Flange mounting	IEC90
Gear box type	Spur
Max. shaft radial force [N]	800
Max. shaft axial force [N]	1450
At A2/2 [mm]	25

* 6 in explosive atmosphere

Torque & speed curves/ Air Motor Power

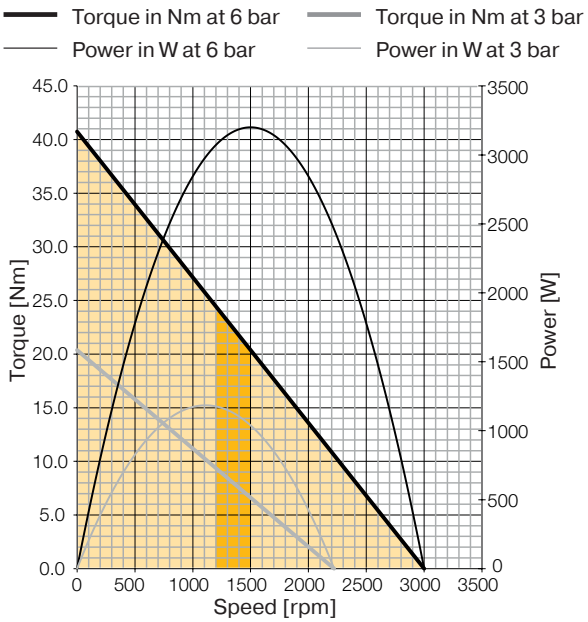

Optimum working speed range [rpm] 1500 to 1200
Optimum working torque range [Nm] 20.4 to 24.4

P1V-A320B0140

Technical data

Max. power [Watt]	3200
Free speed [rpm]	1400
Nominal speed [rpm]	700
Nominal torque [Nm]	43.7
Min. starting torque [Nm]	65.5
Stall torque [Nm]	82.9
Working pressure [bar]	3 to 7*
Air consumption [l/s]	65.0
Min pipe ID inlet/outlet [mm]	19 / 25
Connection [BSPP]	G3/4
Working temperature	-20° to +110°C -20 to +40°C in explosive atmosphere
Weight [kg]	13.6
Flange mounting	IEC90
Gear box type	Helical
Max. shaft radial force [N]	1600
Max. shaft axial force [N]	1350
At A2/2 [mm]	25

* 6 in explosive atmosphere

Torque & speed curves / Air Motor Power

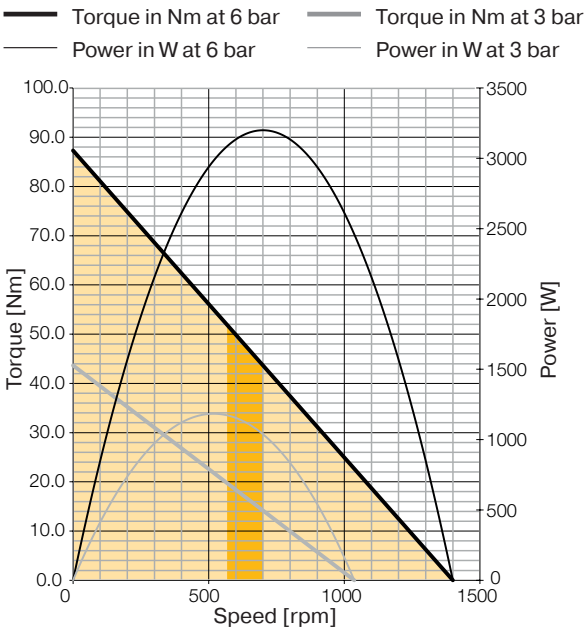

Optimum working speed range [rpm] 700 to 560
Optimum working torque range [Nm] 43.7 to 52.4

Tel: +45 63 12 83 00 | Email: ps@hymatik.com | www.hymatik.com | Hvidkaervej 27a, DK-5250 Odense SV, Denmark

P1V-A500A0600

Technical data

Max. power [Watt]	5000
Free speed [rpm]	6000
Nominal speed [rpm]	3000
Nominal torque [Nm]	15.9
Min. starting torque [Nm]	23.9
Stall torque [Nm]	30.2
Working pressure [bar]	3 to 7*
Air consumption [l/s]	96.7
Min pipe ID inlet/outlet [mm]	25 / 32
Connection [BSPP]	G1
Working temperature	-20˚ to +110°C -20 to +40°C in explosive atmosphere
Weight [kg]	17
Flange mounting	IEC90
Gear box type	None
Max. shaft radial force [N]	1900
Max. shaft axial force [N]	900
At A2/2 [mm]	25

* 6 in explosive atmosphere

Torque & speed curves/ Air Motor Power

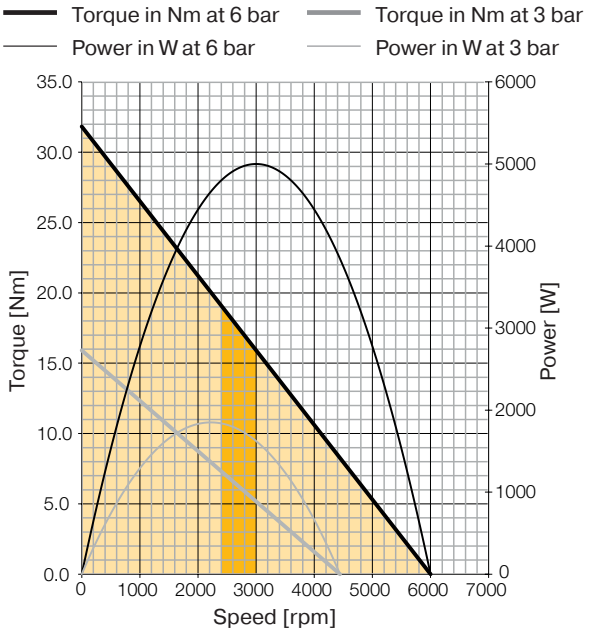

Optimum working speed range [rpm] 3000 to 2400
Optimum working torque range [Nm] 15.9 to 19.1

P1V-A500D0300

Technical data

Max. power [Watt]	5000
Free speed [rpm]	3000
Nominal speed [rpm]	1500
Nominal torque [Nm]	31.8
Min. starting torque [Nm]	47.7
Stall torque [Nm]	60.5
Working pressure [bar]	3 to 7*
Air consumption [l/s]	96.7
Min pipe ID inlet/outlet [mm]	25 / 32
Connection [BSPP]	G1
Working temperature	-20˚ to +110°C -20 to +40°C in explosive atmosphere
Weight [kg]	25.8
Flange mounting	IEC100
Gear box type	Spur
Max. shaft radial force [N]	1250
Max. shaft axial force [N]	950
At A2/2 [mm]	30

* 6 in explosive atmosphere

Torque & speed curves / Air Motor Power

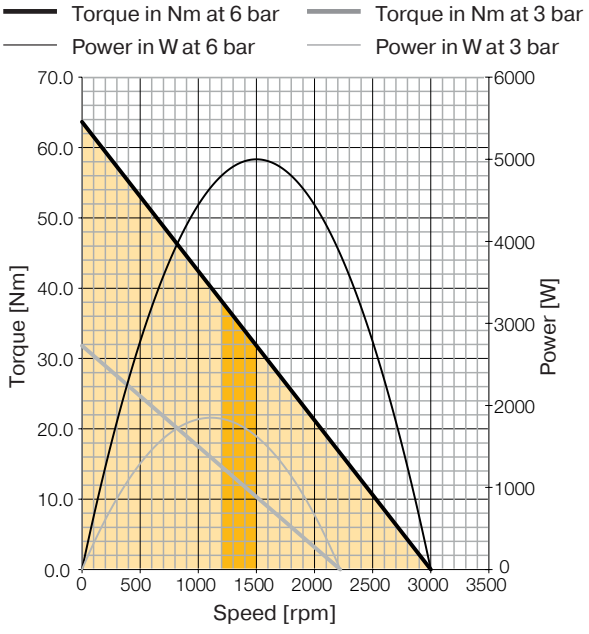

Optimum working speed range [rpm] 1500 to 1200
Optimum working torque range [Nm] 31.8 to 38.2

Tel: +45 63 12 83 00 | Email: ps@hymatik.com | www.hymatik.com | Hvidkaervej 27a, DK-5250 Odense SV, Denmark

P1V-A500B0145

Technical data

Max. power [Watt]	5000
Free speed [rpm]	1450
Nominal speed [rpm]	725
Nominal torque [Nm]	65.9
Min. starting torque [Nm]	98.8
Stall torque [Nm]	125.1
Working pressure [bar]	3 to 7*
Air consumption [l/s]	96.7
Min pipe ID inlet/outlet [mm]	25 / 32
Connection [BSPP]	G1
Working temperature	-20° to +110°C -20 to +40°C in explosive atmosphere
Weight [kg]	26.8
Flange mounting	IEC100
Gear box type	Helical
Max. shaft radial force [N]	2650
Max. shaft axial force [N]	1150
At A2/2 [mm]	30

* 6 in explosive atmosphere

Torque & speed curves/ Air Motor Power

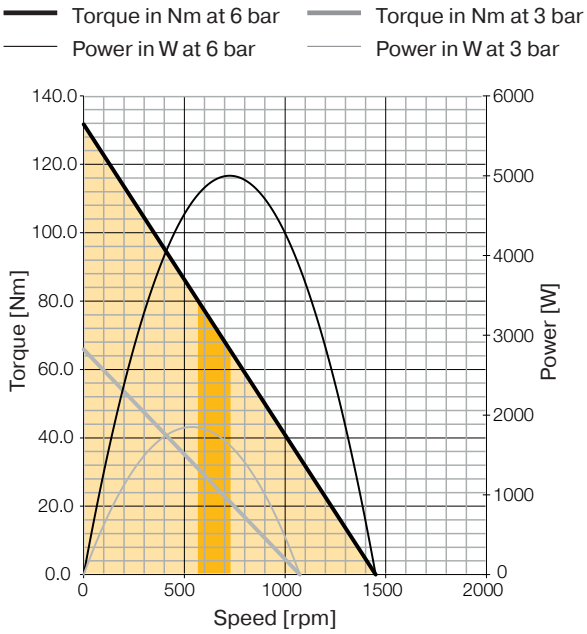

Optimum working speed range [rpm] 725 to 580
Optimum working torque range [Nm] 65.9 to 79.0

P1V-A600A0700

Technical data

Max. power [Watt]	6000
Free speed [rpm]	7000
Nominal speed [rpm]	3500
Nominal torque [Nm]	16.4
Min. starting torque [Nm]	24.6
Stall torque [Nm]	31.1
Working pressure [bar]	3 to 7*
Air consumption [l/s]	131.7
Min pipe ID inlet/outlet [mm]	25 / 32
Connection [BSPP]	G1
Working temperature	-20° to +110°C -20 to +40°C in explosive atmosphere
Weight [kg]	17.0
Flange mounting	IEC90
Gear box type	None
Max. shaft radial force [N]	1900
Max. shaft axial force [N]	900
At A2/2 [mm]	25

* 6 in explosive atmosphere

Torque & speed curves / Air Motor Power

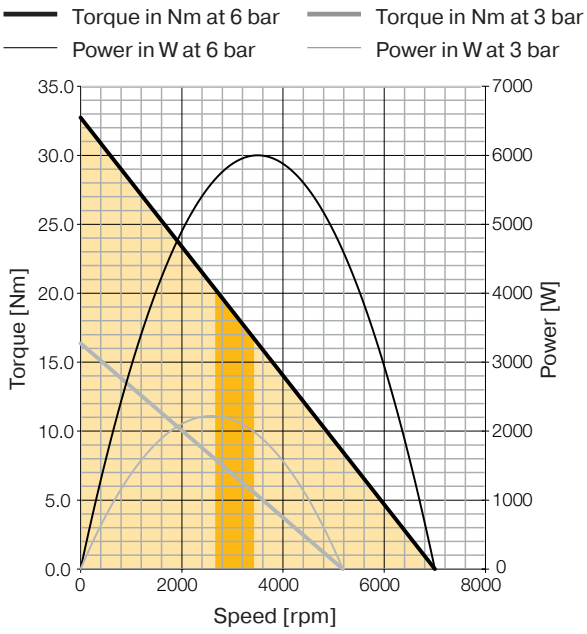

Optimum working speed range [rpm] 3500 to 2800
Optimum working torque range [Nm] 16.4 to 19.6

Tel: +45 63 12 83 00 | Email: ps@hymatik.com | www.hymatik.com | Hvidkaervej 27a, DK-5250 Odense SV, Denmark

P1V-A600D0350

Technical data

Max. power [Watt]	6000
Free speed [rpm]	3500
Nominal speed [rpm]	1750
Nominal torque [Nm]	32.7
Min. starting torque [Nm]	49.1
Stall torque [Nm]	62.2
Working pressure [bar]	3 to 7*
Air consumption [l/s]	131.7
Min pipe ID inlet/outlet [mm]	25 / 32
Connection [BSPP]	G1
Working temperature	-20˚ to +110˚C -20 to +40˚C in explosive atmosphere
Weight [kg]	25.8
Flange mounting	IEC100
Gear box type	Spur
Max. shaft radial force [N]	1250
Max. shaft axial force [N]	880
At A2/2 [mm]	30

* 6 in explosive atmosphere

Torque & speed curves/ Air Motor Power

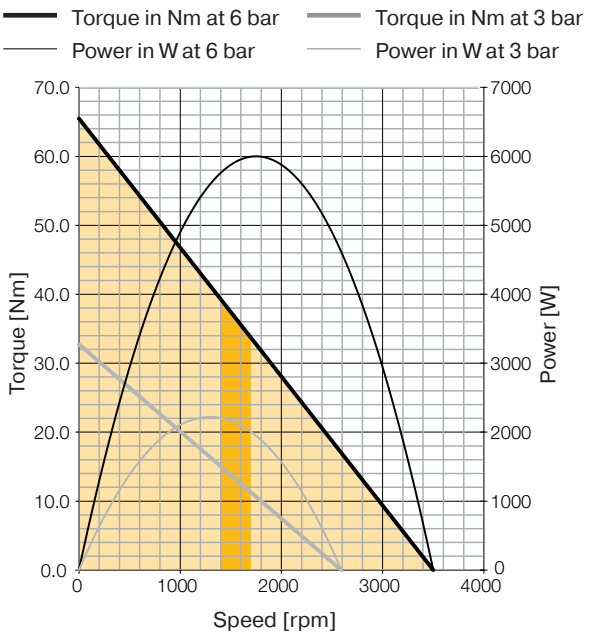

Optimum working speed range [rpm] 1750 to 1400
Optimum working torque range [Nm] 32.7to 39.3

P1V-A600B0160

Technical data

Max. power [Watt]	6000
Free speed [rpm]	1600
Nominal speed [rpm]	800
Nominal torque [Nm]	71.6
Min. starting torque [Nm]	107.4
Stall torque [Nm]	136.1
Working pressure [bar]	3 to 7*
Air consumption [l/s]	131.7
Min pipe ID inlet/outlet [mm]	25 / 32
Connection [BSPP]	G1
Working temperature	-20˚ to +110˚C -20 to +40˚C in explosive atmosphere
Weight [kg]	26.8
Flange mounting	IEC100
Gear box type	Helical
Max. shaft radial force [N]	2650
Max. shaft axial force [N]	1150
At A2/2 [mm]	30

* 6 in explosive atmosphere

Torque & speed curves / Air Motor Power

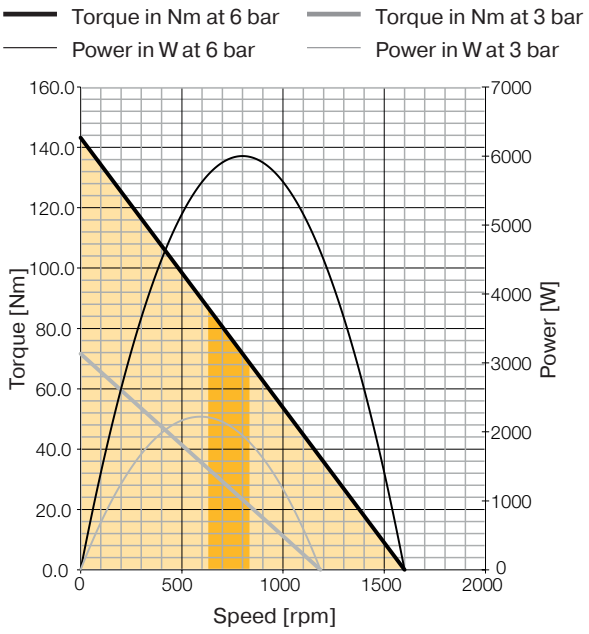

Optimum working speed range [rpm] 800 to 640
Optimum working torque range [Nm] 71.6 to 85.9

Tel: +45 63 12 83 00 | Email: ps@hymatik.com | www.hymatik.com | Hvidkaervej 27a, DK-5250 Odense SV, Denmark

P1V-A900A0600

Technical data

Max. power [Watt]	18000
Free speed [rpm]	6000
Nominal speed [rpm]	3000
Nominal torque [Nm]	28.6
Min. starting torque [Nm]	43.0
Stall torque [Nm]	54.4
Working pressure [bar]	3 to 7*
Air consumption [l/s]	166.7
Min pipe ID inlet/outlet [mm]	25 / 32
Connection [BSPP]	G1
Working temperature	-20° to +110°C
Weight [kg]	33
Flange mounting	IEC100
Gear box type	None
Max. shaft radial force [N]	7500
Max. shaft axial force [N]	1100
At A2/2 [mm]	30

* 6 in explosive atmosphere

Torque & speed curves/ Air Motor Power

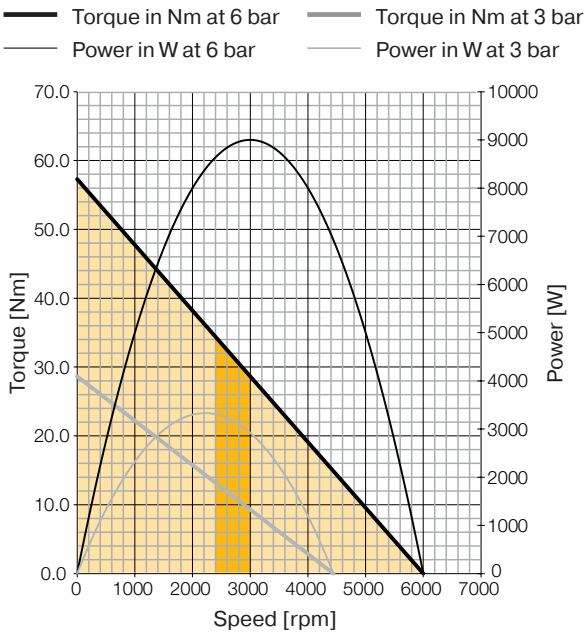

Optimum working speed range [rpm] 3000 to 2400
Optimum working torque range [Nm] 28.6 to 34.4

P1V-AJ00A0600

Technical data

Max. power [Watt]	18000
Free speed [rpm]	6000
Nominal speed [rpm]	3000
Nominal torque [Nm]	57.3
Min. starting torque [Nm]	85.9
Stall torque [Nm]	108.9
Working pressure [bar]	3 to 7*
Air consumption [l/s]	333.3
Min pipe ID inlet/outlet [mm]	43 / 63.5
Connection [BSPP]	G2
Working temperature	-20° to +110°C
Weight [kg]	54.0
Flange mounting	IEC112A
Gear box type	None
Max. shaft radial force [N]	7500
Max. shaft axial force [N]	1100
At A2/2 [mm]	30

* 6 in explosive atmosphere

Torque & speed curves / Air Motor Power

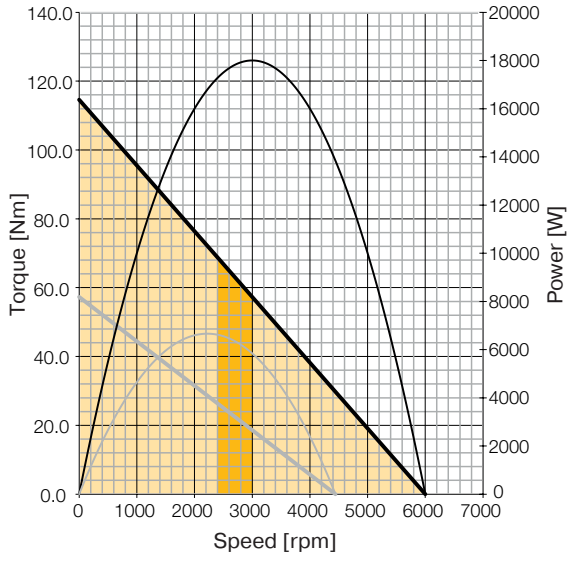

Optimum working speed range [rpm] 3000 to 2400
Optimum working torque range [Nm] 57.3 to 68.8

Tel: +45 63 12 83 00 | Email: ps@hymatik.com | www.hymatik.com | Hvidkaervej 27a, DK-5250 Odense SV, Denmark

Dimensions [mm]

P1V-A160A0900
IEC71 Flange mounting

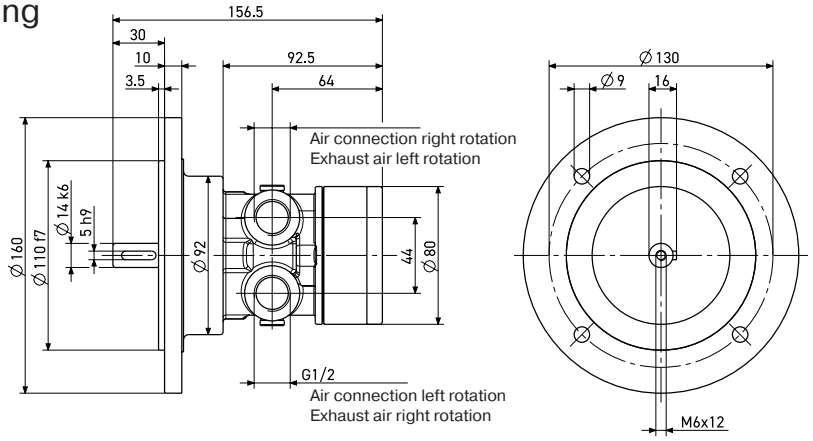

P1V-A160D0300
IEC80 Flange mounting

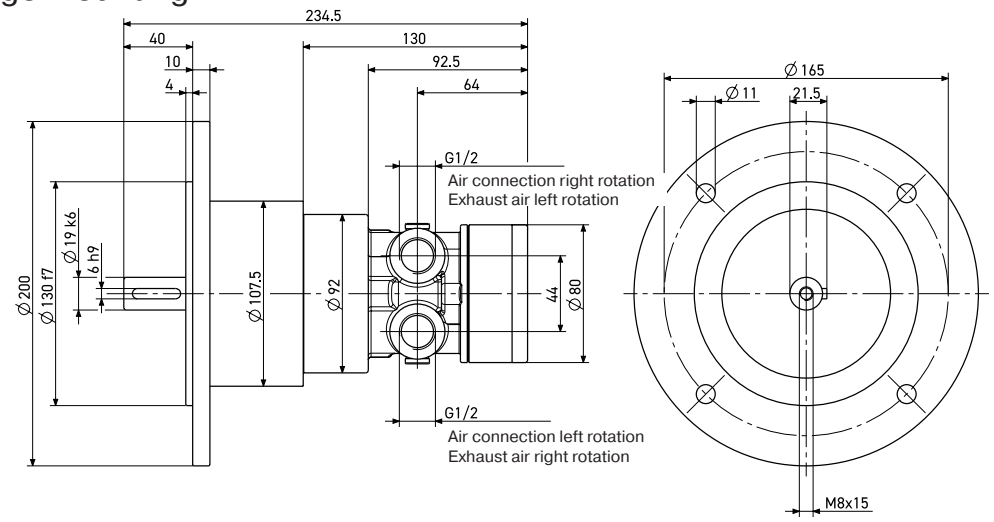

P1V-A160B0140
IEC80 Flange mounting

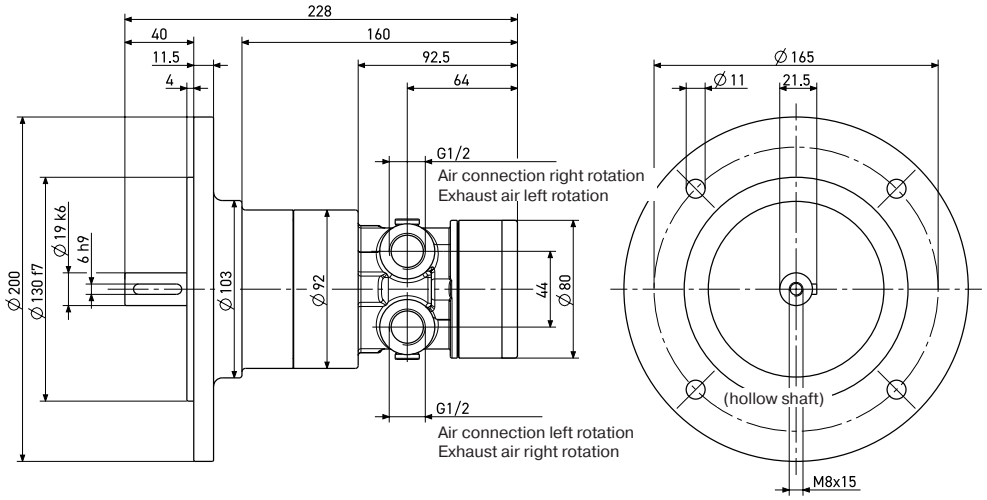

Tel: +45 63 12 83 00 | Email: ps@hymatik.com | www.hymatik.com | Hvidkaervej 27a, DK-5250 Odense SV, Denmark

P1V-A320A0700
IEC80 Flange mounting

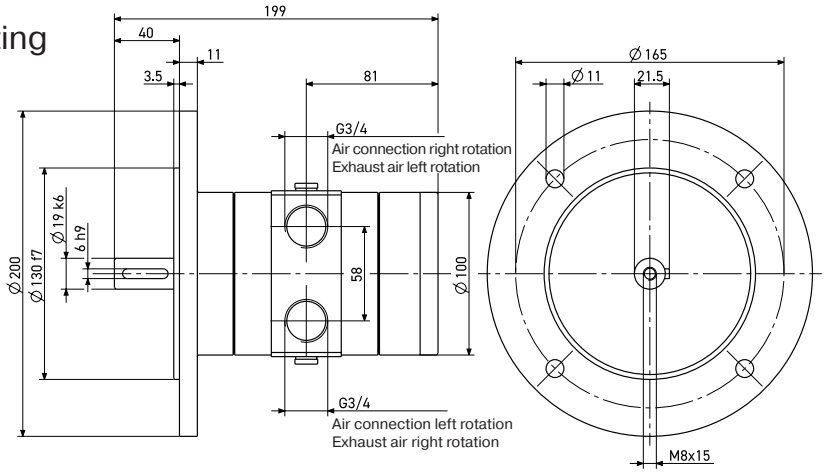

P1V-A320D0300
IEC90 Flange mounting

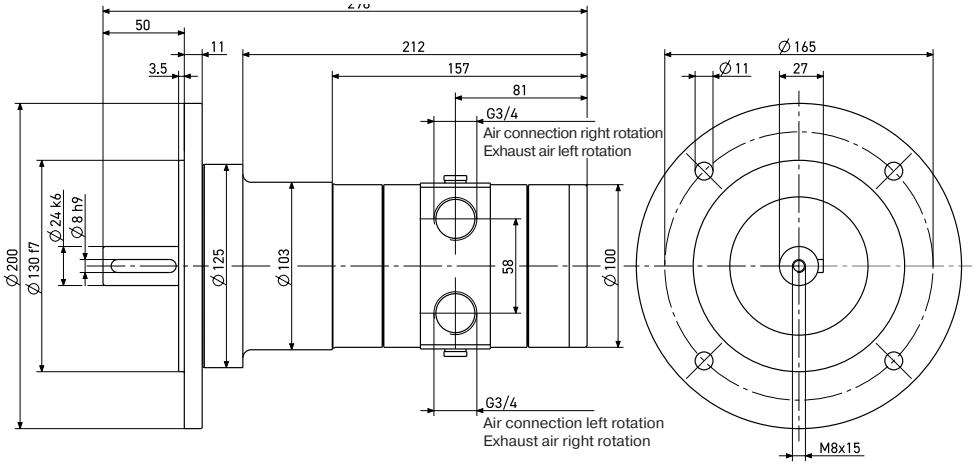

P1V-A320B0140
IEC90 Flange mounting

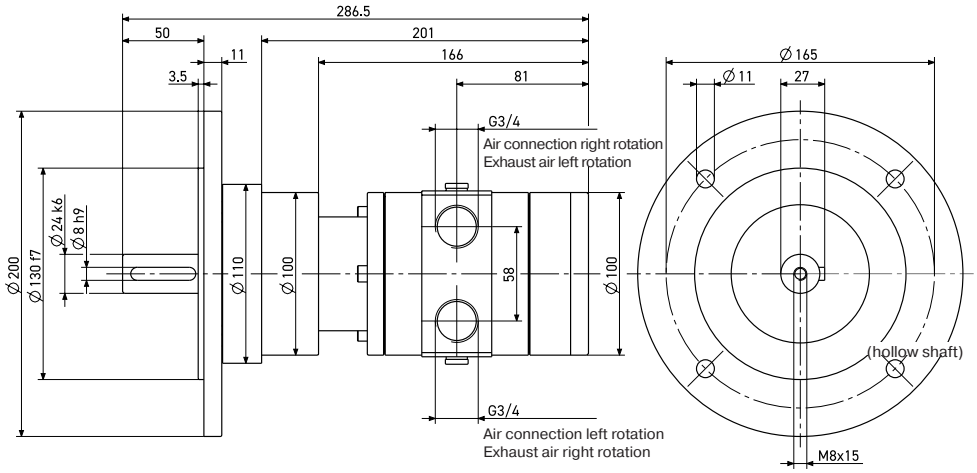

Tel: +45 63 12 83 00 | Email: ps@hymatik.com | www.hymatik.com | Hvidkaervej 27a, DK-5250 Odense SV, Denmark

P1V-A500A0600
IEC90 Flange mounting

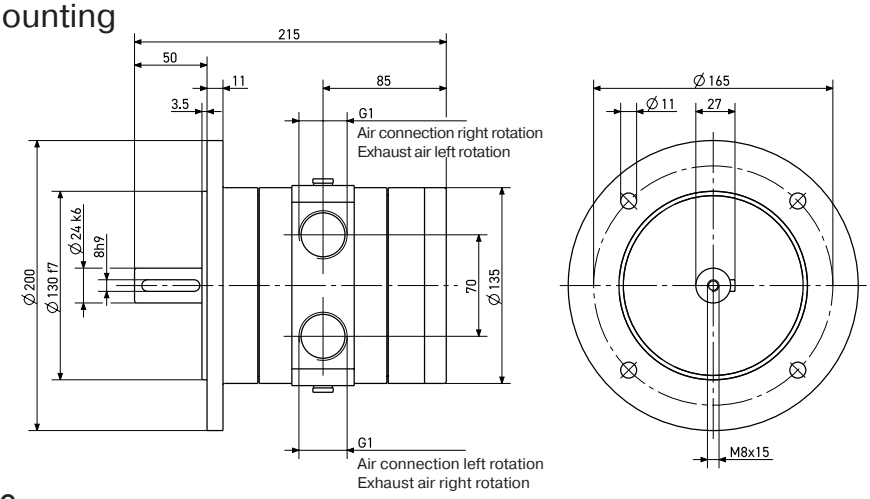

P1V-A500D0300
IEC100 Flange mounting

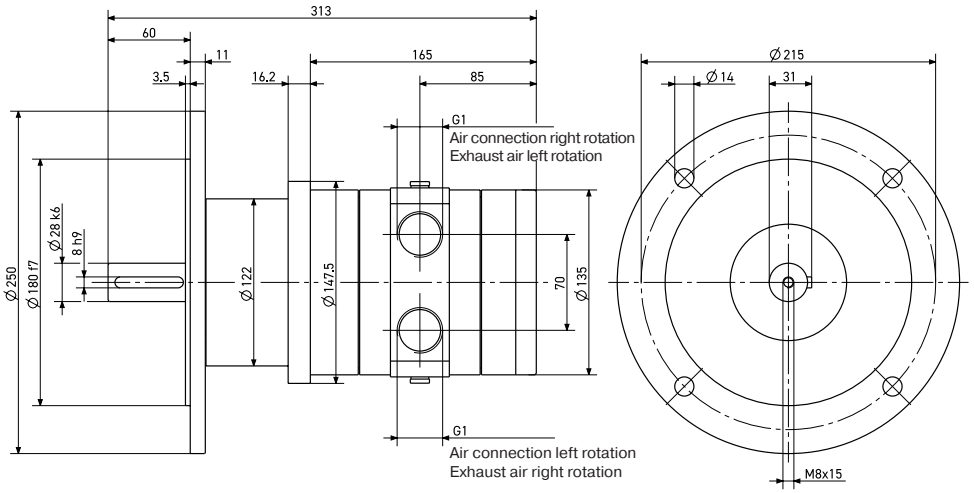

P1V-A500B0145
IEC100 Flange mounting

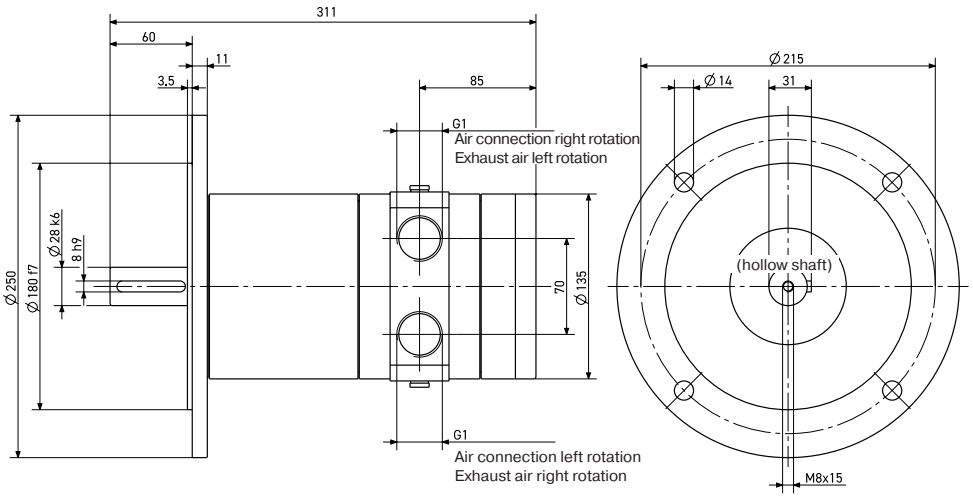

Tel: +45 63 12 83 00 | Email: ps@hymatik.com | www.hymatik.com | Hvidkaervej 27a, DK-5250 Odense SV, Denmark

P1V-A600A0700
IEC90 Flange mounting

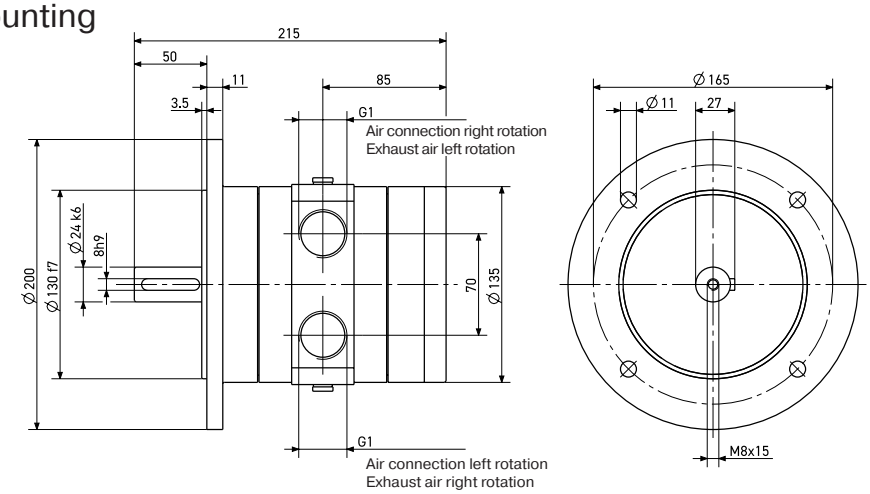

P1V-A600D0350
IEC100 Flange mounting

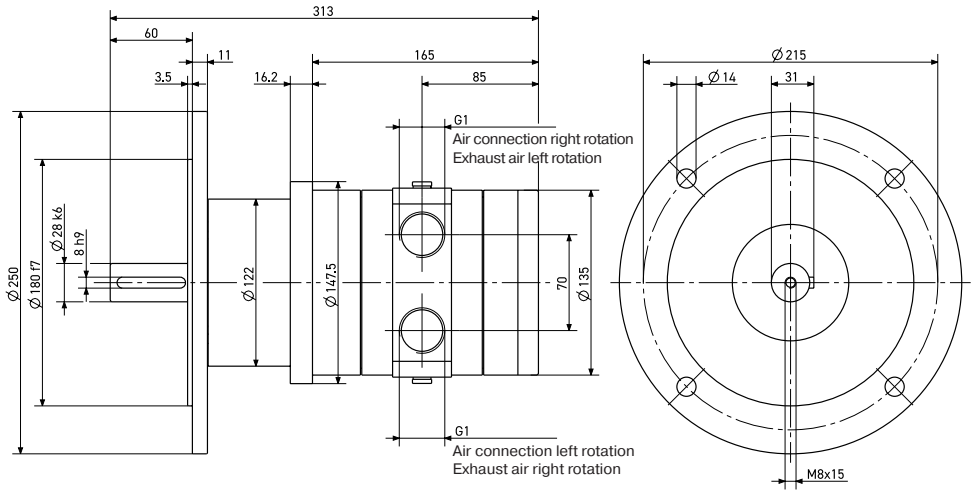

P1V-A600B0160
IEC100 Flange mounting

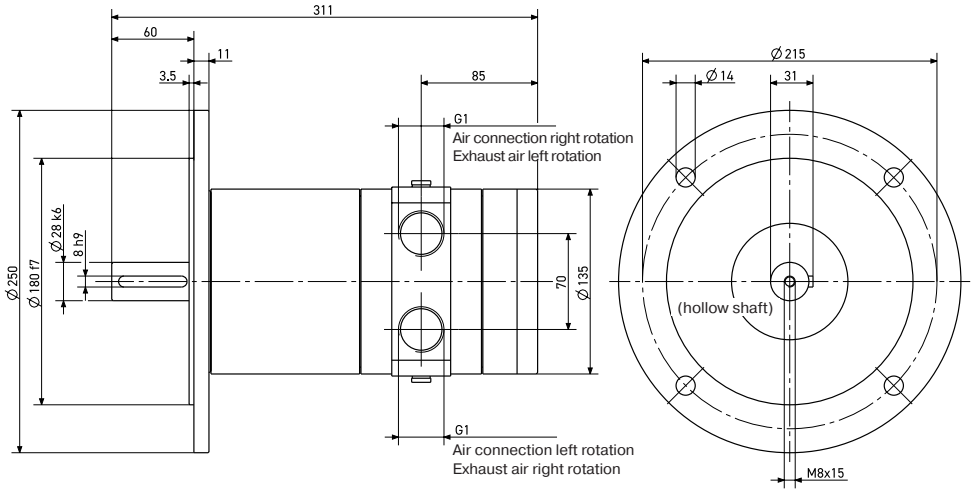

Tel: +45 63 12 83 00 | Email: ps@hymatik.com | www.hymatik.com | Hvidkaervej 27a, DK-5250 Odense SV, Denmark

P1V-A900A0600
IEC112A Flange mounting

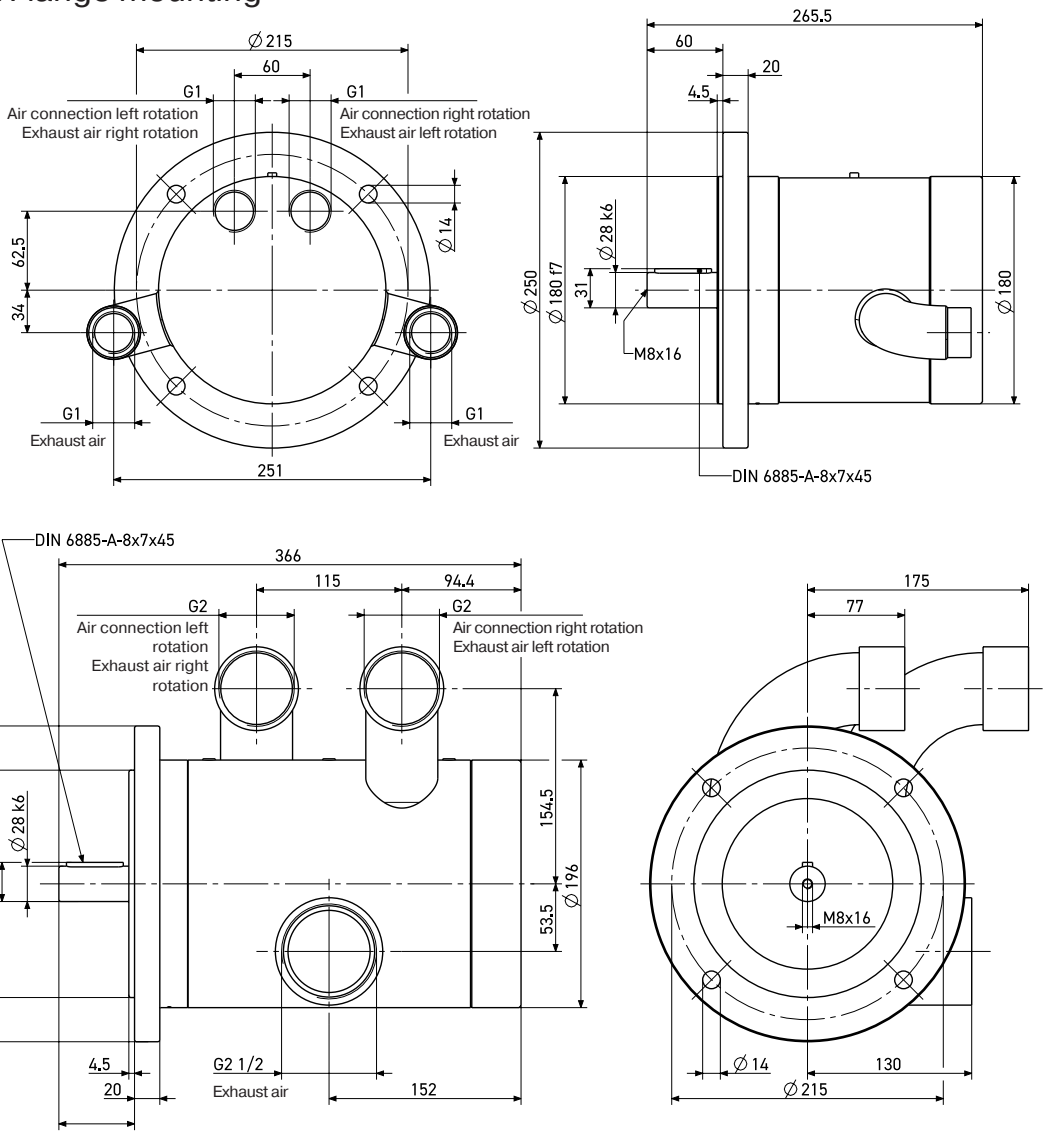

P1V-AF1 Foot bracket

Made in steel,
kit with
mounting screws

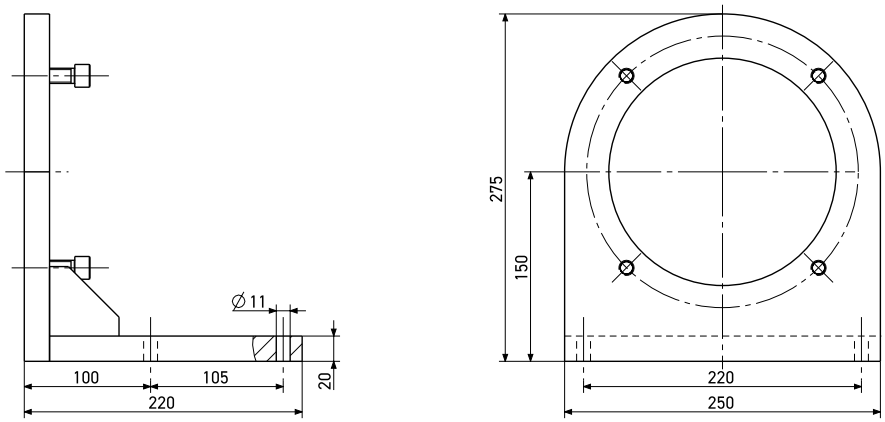

Tel: +45 63 12 83 00 | Email: ps@hymatik.com | www.hymatik.com | Hvidkaervej 27a, DK-5250 Odense SV, Denmark

Tel: +45 63 12 83 00 | Email: ps@hymatik.com | www.hymatik.com | Hvidkaervej 27a, DK-5250 Odense SV, Denmark

Choice of an air motor with gear

Planetary gears are characterized by high efficiency, low moment of inertia and can offer high gear ratios.

Helical gears are characterized by high efficiency. Several reduction stages permit relatively high gear ratios. Central output shaft and simple installation with flange or foot.

Worm gears are characterized by relatively simple technical construction, with a worm and pinion. This can give a large gear ratio and small dimensions. The efficiency of a worm drive gear is considerably lower than for planetary or helical gears.

Planetary Gear

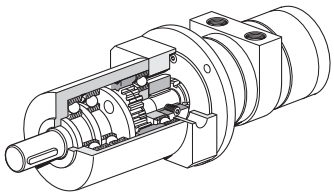

The output shaft is always in the middle of the gearbox.
Small installation dimensions relative to the torque provided.
The gears are lubricated by grease, which means that it can be installed in all conceivable positions.

- Small installation dimensions
- Free installation position
- Simple flange installation
- Low weight
- Output shaft in the middle
- High efficiency

Helical (Spur) Gear

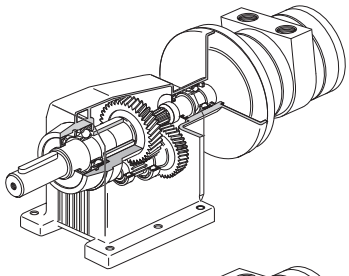

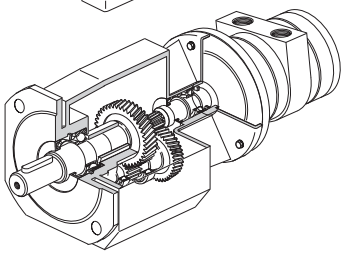

Oil-bath gearboxes mean that the installation position must be decided in advance. The installation position determines the volume of oil in the gearbox and location of oil filling and drain plugs.

- High efficiency
- Simple flange or foot installation
- Relatively low price
  - Installation position must be chosen in advance
  - Higher weight than planetary :&: or worm drive gears.

Worm Gear

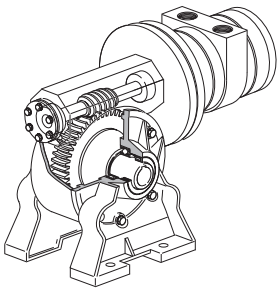

The design principle of worm drive gears makes them self-locking at higher gear ratios (the output shaft is "locked"). The output shaft comes out at an angle of 90° to the motor spindle. Installation is simple, with a flange on the left or right side, or with a foot. The gearbox is equipped as standard with a hollow output shaft with a key slot. Loose shafts with key can put the output shaft on the right, left, or on both sides.
Oil-bath gearboxes mean that the installation position must be decided in advance. The installation position determines the volume of oil in the gearbox and location of oil filling and drain plugs.

- Low weight in relation to gear ratio
- Non-reversible at high gear ratios
- Relatively low price
  - Relatively low efficiency
  - Installation position must be decided in advance
  - Output shaft at 90° to motor spindle

Tel: +45 63 12 83 00 | Email: ps@hymatik.com | www.hymatik.com | Hvidkaervej 27a, DK-5250 Odense SV, Denmark

Choice of an air motor with gear

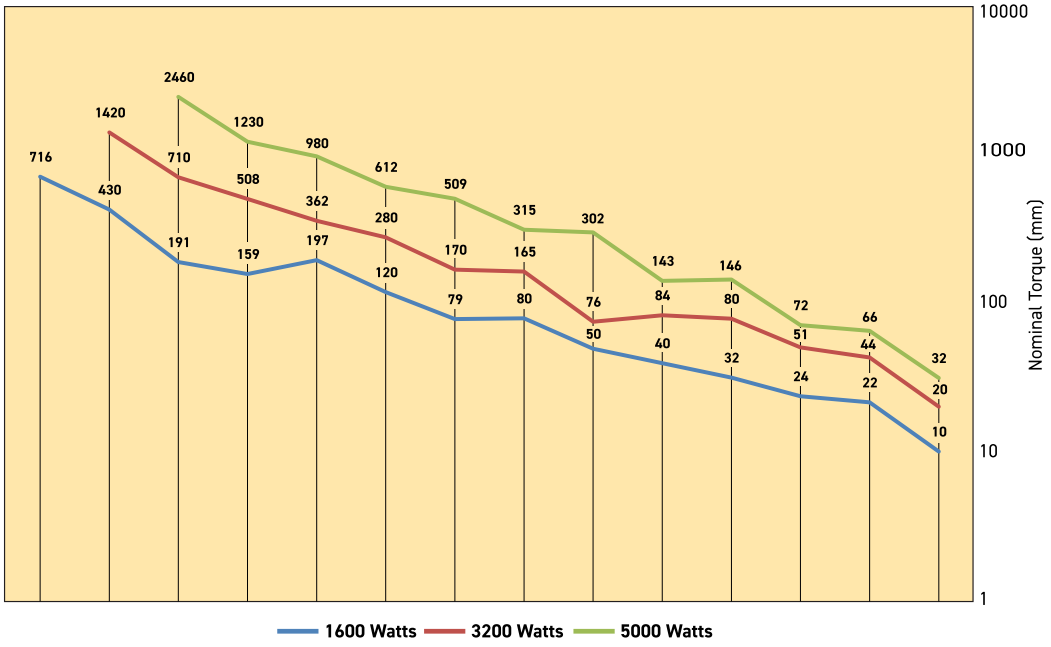

The motor to be used should be selected by starting with the torque needed at a specific spindle speed. In other words, to choose the right motor, you have to know the required speed and torque. Since maximum power is reached at half the motor's free speed, the motor should be chosen so that the point aimed at is as close as possible to the maximum power of the motor.
The design principle of the motor means that higher torque is generated when it is braked, which tends to increase the speed, etc. This means that the motor has a kind of speed self regulation function built in.
Use the following graph to choose the correct motor size and the correct type of gear as appropriate. The graph contains the points for the maximum torque of each motor at maximum power. Put in your point on the graph and select a marked point above and to the right of the point you need.

Then check the characteristic graph of each motor to find more accurate technical data. Always select a motor where the data required is in the grey field. Also use the correction diagram to see what it would mean to use different air supply pressures with the motor.

Tip: Select a motor which is slightly too fast and powerful, regulate its speed and torque with a pressure regulator and/or restriction to achieve the optimum working point.

Order code	Gear box type	Torque (Nm)
P1V-A160D0300	Helical (spur)	10
P1V-A160B0140	Planetary	22
P1V-A160D0066 · ·	Helical (spur)	24
P1V-A160B0060	Planetary	32
P1V-A160H0043 · ·	Worm	40
P1V-A160D0032 · ·	Helical (spur)	50
P1V-A160B0019	Planetary	80
P1V-A160H0020 · ·	Worm	79
P1V-A160D0014 · ·	Helical (spur)	120
P1V-A160D0008 · ·	Helical (spur)	197
P1V-A160H0010 · ·	Worm	159
P1V-A160H0008 · ·	Worm	191
P1V-A160D0004 · ·	Helical (spur)	430
P1V-A160D0003 · ·	Helical (spur)	716
P1V-A320D0300	Helical (spur)	20
P1V-A320B0140	Planetary	44
P1V-A320D0080 · ·	Helical (spur)	51
P1V-A320D0052 · ·	Helical (spur)	80
P1V-A320B0060	Planetary	84
P1V-A320H0050 · ·	Worm	76
P1V-A320D0025 · ·	Helical (spur)	165
P1V-A320H0022 · ·	Worm	170
P1V-A320H0013 · ·	Worm	280
P1V-A320D0011 · ·	Helical (spur)	362
P1V-A320H0006 · ·	Worm	508
P1V-A320H0006 · ·	Helical (spur)	710
P1V-A320D0003 · ·	Helical (spur)	1420
P1V-A500D0300	Helical (spur)	32
P1V-A500B0145	Planetary	66
P1V-A500D0105 · ·	Helical (spur)	72
P1V-A500D0052 · ·	Helical (spur)	146
P1V-A500H0050 · ·	Worm	143
P1V-A500D0025 · ·	Helical (spur)	302
P1V-A500H0022 · ·	Worm	315
P1V-A500H0013 · ·	Worm	509
P1V-A500D0013 · ·	Helical (spur)	612
P1V-A500H0006 · ·	Worm	980
P1V-A500D0006 · ·	Helical (spur)	1230
P1V-A500H0003 · ·	Helical (spur)	2460
P1V-A600D0350	Helical (spur)	33
P1V-A600B0160	Planetary	72

Tel: +45 63 12 83 00 | Email: ps@hymatik.com | www.hymatik.com | Hvidkaervej 27a, DK-5250 Odense SV, Denmark

Planetary Gear

NOTE! All technical data are based on a working pressure of 6 bar and with oil.
Speed tolerance accuracy -+10%.

Note! Inlet and exhaust air flows are critical for reaching the best performances.





B: Reversible motor with planetary gear box, flange (B) mounting, free installation position

Max power	Free speed	Nominal speed	Nominal torque	Min starting torque	Max gear box permanent torque	Air consumption	Connection	Min pipe ID	Weight	Mounting	Max permissible shaft loading		At A2/2	Gear box type & size	Order Code
[kW]	[rpm]	[rpm]	[Nm]	[Nm]	[Nm]	[l/s]	BSPP	[mm]	[kg]		F radial [N]	F axial [N]	[mm]		
1600	600	450	32.0	48.0	35.0	31.7	G1/2	15/19	8.3	Flange	2400	1900	23.0	P90F	**P1V-A160B0060**
1600	190	180	80.0	120.0	100.0	31.7	G1/2	15/19	15.4	Flange	4600	4000	35.0	120F	**P1V-A160B0019**
3200	600	350	84.0*	131.0	40.0	65.0	G1/2	19/25	14.3	Flange	2400	1900	23.0	P90F	**P1V-A320B0060**

Maximum admissible speed (idling)
Air consumption at the maximum air motor power
* Maximum torque 480 Nm for a maximum of 1000 cycles under load.

Permitted shaft loadings

Max permitted load on output shaft for basic motors (based on 10,000,000 revolutions of the output shaft, with 90% probable service life for ball bearings.

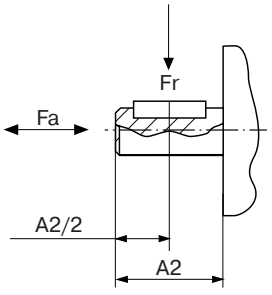

Radial force (Fr)
and
Axial force (Fa)

Tel: +45 63 12 83 00 | Email: ps@hymatik.com | www.hymatik.com | Hvidkaervej 27a, DK-5250 Odense SV, Denmark

Dimensions [mm] - Planetary Gear

P1V-A160B0060 planetary gear box (B)

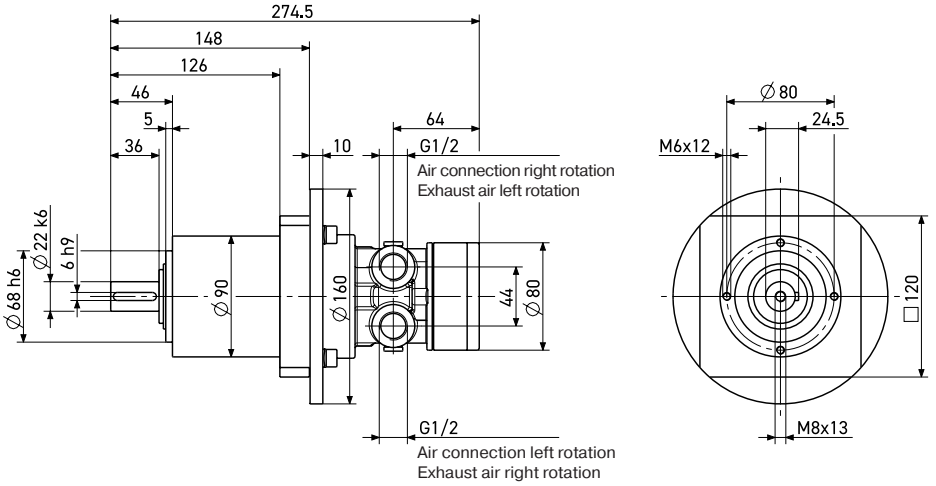

P1V-A160B0019 planetary gear box (B)

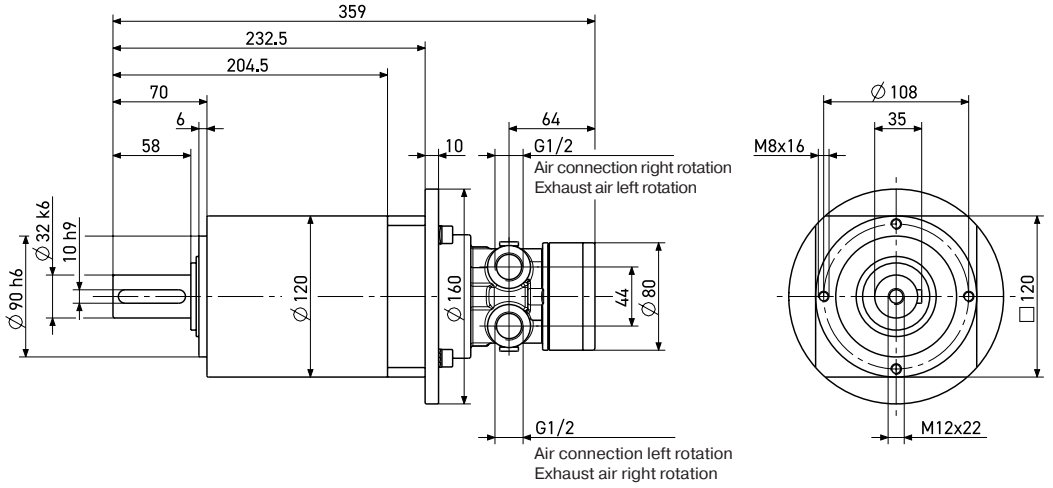

P1V-A320B0060 planetary gear box (D)

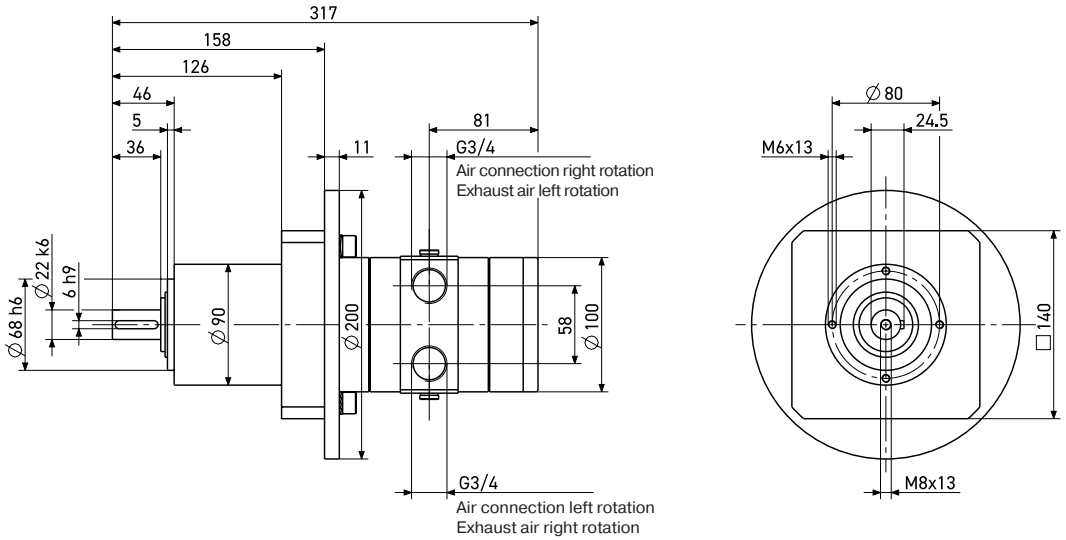

Tel: +45 63 12 83 00 | Email: ps@hymatik.com | www.hymatik.com | Hvidkaervej 27a, DK-5250 Odense SV, Denmark

Helical (Spur) Gear

NOTE! All technical data are based on a working pressure of 6 bar and with oil.
Speed tolerance accuracy -+10%.

Note! Inlet and exhaust air flows are critical for reaching the best performances.

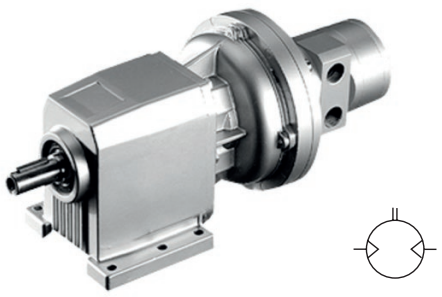

D, E: Reversible motor with helical (spur) gear box, flange (D) or foot bracket (E) mountings

Max power	Free speed	No-minal speed	Nominal torque	Min starting torque	Max gear box permanent torque	Air cosump-tion	Connec-tion	Min pipe ID inlet/ outlet	Weight	Max permis-sible shaft loading		At B3/2	Moun-ting	Gear box type & size	Order Code	Moun-ting	Gear box type & size	Order Code
[kW]	[rpm]	[rpm]	[Nm]	[Nm]	[Nm]	[l/s]	BSPP	[mm]	[kg]	F radial [N]	F axial [N]	[mm]						
1600	660	590	24.0	36.0	45.0	31.7	G1/2	15/19	11.2	1140	228	20	Flange	S122F	**P1V-A160D0066****	Foot	S122K	**P1V-A160E0066****
1600	320	280	50.0	75.0	140.0	31.7	G1/2	15/19	12.2	2030	406	25	Flange	S222F	**P1V-A160D0032****	Foot	S222K	**P1V-A160E0032****
1600	140	120	120.0	180.0	280.0	31.7	G1/2	15/19	14.4	4030	806	30	Flange	S322F	**P1V-A160D0014****	Foot	S322K	**P1V-A160E0014****
1600	80	70	197.0	299.0	560.0	31.7	G1/2	15/19	32.2	5800	1160	35	Flange	S413F	**P1V-A160D0008****	Foot	S413K	**P1V-A160E0008****
1600	37	33	430.0	645.0	1000.0	31.7	G1/2	15/19	53.4	10000	2000	40	Flange	S513F	**P1V-A160D0004****	Foot	S513K	**P1V-A160E0004****
1600	21	18	176.0	1084.0	1600.0	31.7	G1/2	15/19	74.7	16000	3200	50	Flange	S614F	**P1V-A160D0003****	Foot	S614K	**P1V-A160E0003****
3200	800	656	51.0	77.0	42.0	65.0	G3/4	19/25	17.3	660	132	20	Flange	S122F	**P1V-A320D0080****	Foot	S122K	**P1V-A320E0080****
3200	520	365	79.5	119.0	115.0	65.0	G3/4	19/25	18.3	1750	350	25	Flange	S222F	**P1V-A320D0052****	Foot	S222K	**P1V-A320E0052****
3200	250	175	165.0	248.0	235.0	65.0	G3/4	19/25	20.3	3290	658	30	Flange	S322F	**P1V-A320D0025****	Foot	S322K	**P1V-A320E0025****
3200	110	80	362.0	544.0	500.0	65.0	G3/4	19/25	39.3	5130	1026	35	Flange	S412F	**P1V-A320D0011****	Foot	S412K	**P1V-A320E0011****
3200	55	40	710.0	1065.0	1000.0	65.0	G3/4	19/25	60.5	10000	2000	40	Flange	S513F	**P1V-A320D0006****	Foot	S513K	**P1V-A320E0006****
3200	30	20	1420.0	2130.0	1600.0	65.0	G3/4	19/25	76.0	16000	3200	50	Flange	S613F	**P1V-A320D0003****	Foot	S613K	**P1V-A320E0003****
5000	1050	625	72.0	108.0	80.0	96.7	G1	25/32	24.6	1370	274	25	Flange	S222F	**P1V-A500D0105****	Foot	S222K	**P1V-A500E0105****
5000	520	310	146.0	220.0	175.0	96.7	G1	25/32	27.0	2580	516	30	Flange	S322F	**P1V-A500D0052****	Foot	S322K	**P1V-A500E0052****
5000	250	150	302.0	450.0	385.0	96.7	G1	25/32	46.0	3880	776	35	Flange	S412F	**P1V-A500D0025****	Foot	S412K	**P1V-A500E0025****
5000	125	74	612.0	920.0	795.0	96.7	G1	25/32	67.2	8870	1770	40	Flange	S512F	**P1V-A500D0013****	Foot	S512K	**P1V-A500E0013****
5000	60	36	1230.0	1850.0	1600.0	96.7	G1	25/32	82.5	14500	2900	50	Flange	S613F	**P1V-A500D0006****	Foot	S613K	**P1V-A500E0006****
5000	30	18	2460.0	3700.0	4000.0	96.7	G1	25/32	164.0	35000	7000	70	Flange	S803F	**P1V-A500D0003****	Foot	S803K	**P1V-A500E0003****

** Specify installation position in the order code as in the illustrations
Maximum admissible speed (idling)
Air consumption at the maximum air motor power

Note!
specify installation position in the order code as in the illustration below.
Example: P1V-A160D0066B5

Note:
Oil-bath gearboxes mean that the installation position must be decided in advance. The installation position determines the volume of oil in the gearbox and location of oil filling and drain plugs.

D: Installation positions, helical gear and flange mounting

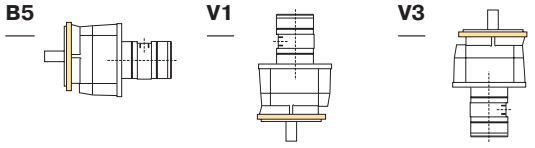

E: Installation positions, helical gear and foot mounting

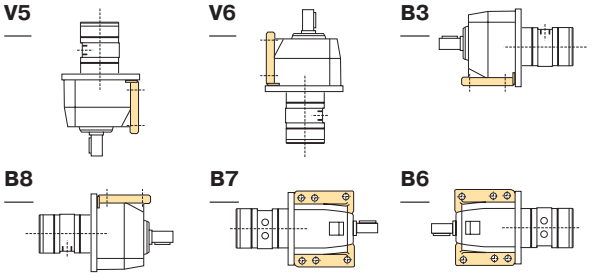

Tel: +45 63 12 83 00 | Email: ps@hymatik.com | www.hymatik.com | Hvidkaervej 27a, DK-5250 Odense SV, Denmark

Dimensions [mm] - Helical (Spur) Gear

P1V-A160D00****, Spur gear box (D) - Flange mounting

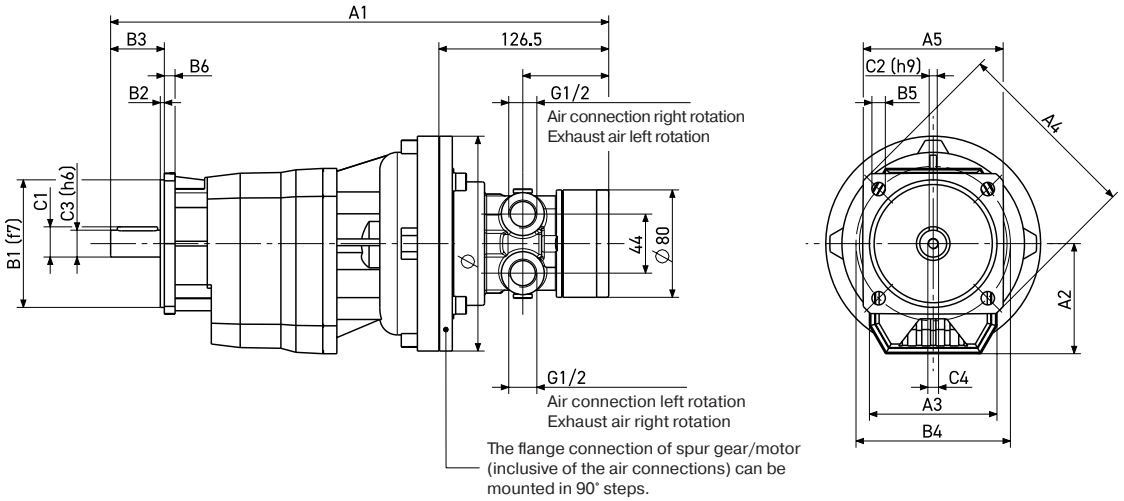

Order code	Dimensions (mm)														
	A1	A2	A3	A4	A5	B1	B2	B3	B4	B5	B6	C1	C2	C3	C4
P1V-A160D0066**	371.0	82.0	95.0	140.0	□ 105	95.0	3.0	40.0	115.0	9.5	8.0	22.5	6.0	20.0	M8 x 19
P1V-A160D0032**	400.0	94.0	110.0	160.0	□ 110	110.0	3.5	50.0	130.0	9.5	10.0	28.0	8.0	25.0	M8 x 19
P1V-A160D0014**	434.0	108.0	130.0	200.0	□ 150	130.0	3.5	60.0	165.0	11.5	12.0	33.0	8.0	30.0	M10 x 22
P1V-A160D0008**	463.0	128.0	155.0	250.0	-	180.0	4.0	70.0	215.0	14.0	13.0	38.0	10.0	35.0	M10 x 22
P1V-A160D0004**	489.0	152.0	185.0	300.0	-	230.0	4.0	80.0	265.0	14.0	16.0	43.0	12.0	40.0	M12 x 28
P1V-A160D0003**	616.0	178.5	210.0	350.0	-	250.0	5.0	100.0	300.0	18.0	18.0	53.5	14.0	50.0	M16 x 36

P1V-A160E00****, Spur gear box (E) - Foot Bracket mounting

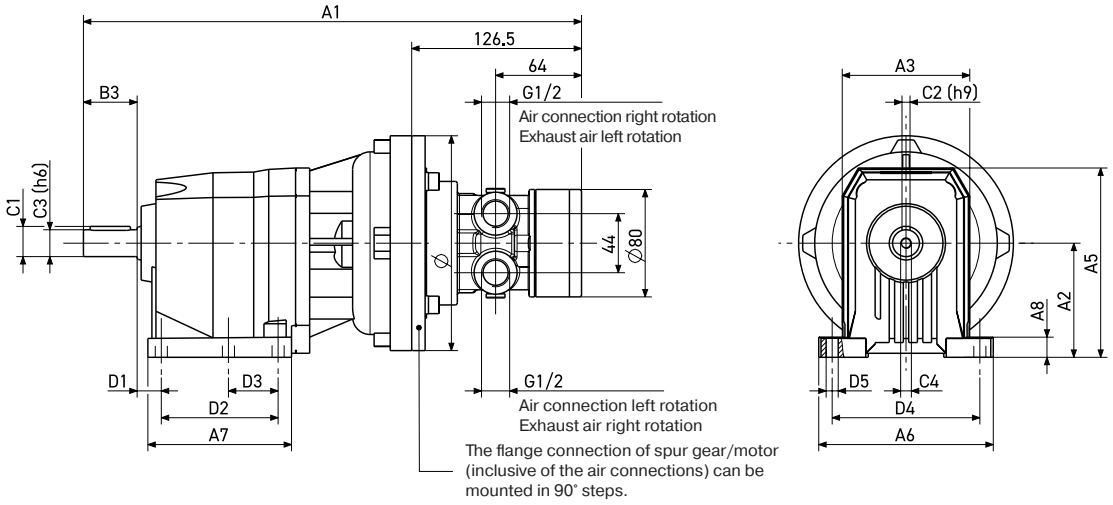

Order code	Dimensions (mm)																
	A1	A2	A3	A5	A6	A7	A8	B3	C1	C2	C3	C4	D1	D2	D3	D4	D5
P1V-A160E0066**	371.0	85.0	95.0	141.0	130.0	107.0	15.0	40.0	22.5	6.0	20.0	M8 x 19	18.0	87.0	37.0	110.0	9.0
P1V-A160E0032**	400.0	100.0	110.0	166.0	155.0	137.0	17.0	50.0	28.0	8.0	25.0	M8 x 19	18.0	107.5	47.5	130.0	11.0
P1V-A160E0014**	434.0	110.0	130.0	181.0	190.0	156.0	20.0	60.0	33.0	8.0	30.0	M10 x 22	18.0	130.0	60.0	160.0	11.0
P1V-A160E0008**	463.0	130.0	155.0	223.0	216.0	185.5	18.0	70.0	38.0	10.0	35.0	M10 x 22	19.5	149.5	-	180.0	14.0
P1V-A160E0004**	489.0	155.0	185.0	278.0	270.0	200.0	22.0	80.0	43.0	12.0	40.0	M12 x 28	25.0	156.0	-	225.0	18.0
P1V-A160E0003**	616.0	195.0	210.0	316.0	300.0	232.0	25.0	100.0	53.5	14.0	50.0	M16 x 36	25.0	180.0	-	250.0	18.0

Tel: +45 63 12 83 00 | Email: ps@hymatik.com | www.hymatik.com | Hvidkaervej 27a, DK-5250 Odense SV, Denmark

P1V-A320D00****, Spur gear box (D) - Flange mounting

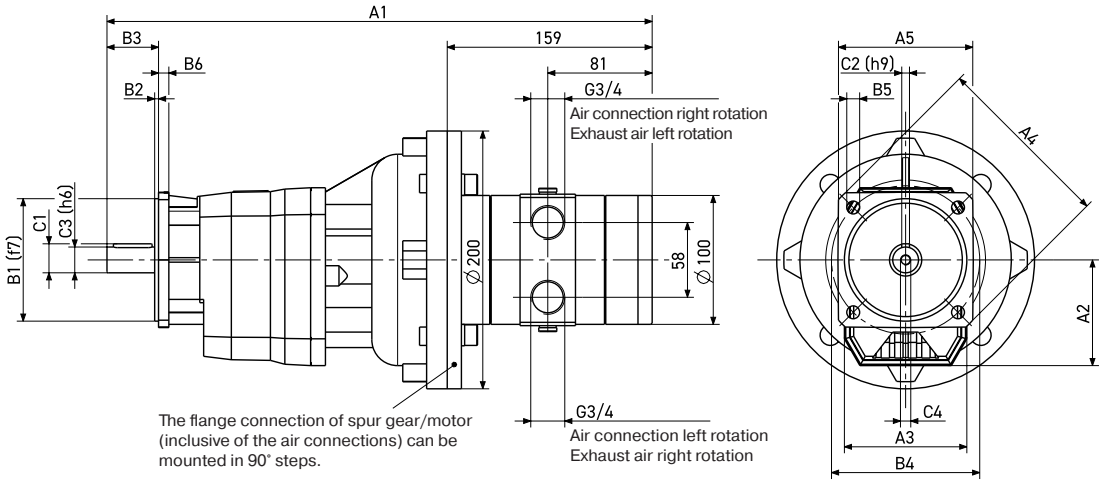

Order code	Dimensions (mm)														
	A1	A2	A3	A4	A5	B1	B2	B3	B4	B5	B6	C1	C2	C3	C4
P1V-A320D0080**	423.0	82.0	95.0	140.0	□ 105	95.0	3.0	40.0	115.0	9.5	8.0	22.5	6.0	20.0	M8 x 19
P1V-A320D0052**	451.0	94.0	110.0	160.0	□ 110	110.0	3.5	50.0	130.0	9.5	10.0	28.0	8.0	25.0	M8 x 19
P1V-A320D0025**	486.0	108.0	130.0	200.0	□ 150	130.0	3.5	60.0	165.0	11.5	12.0	33.0	8.0	30.0	M10 x 22
P1V-A320D0011**	515.0	128.0	155.0	250.0	-	180.0	4.0	70.0	215.0	14.0	13.0	38.0	10.0	35.0	M10 x 22
P1V-A320D0006**	541.0	152.0	185.0	300.0	-	230.0	4.0	80.0	265.0	14.0	16.0	43.0	12.0	40.0	M12 x 28
P1V-A320D0003**	594.0	178.5	210.0	350.0	-	250.0	5.0	100.0	300.0	18.0	18.0	53.5	14.0	50.0	M16 x 36

P1V-A320E00****, Spur gear box (E) - Foot Bracket mounting

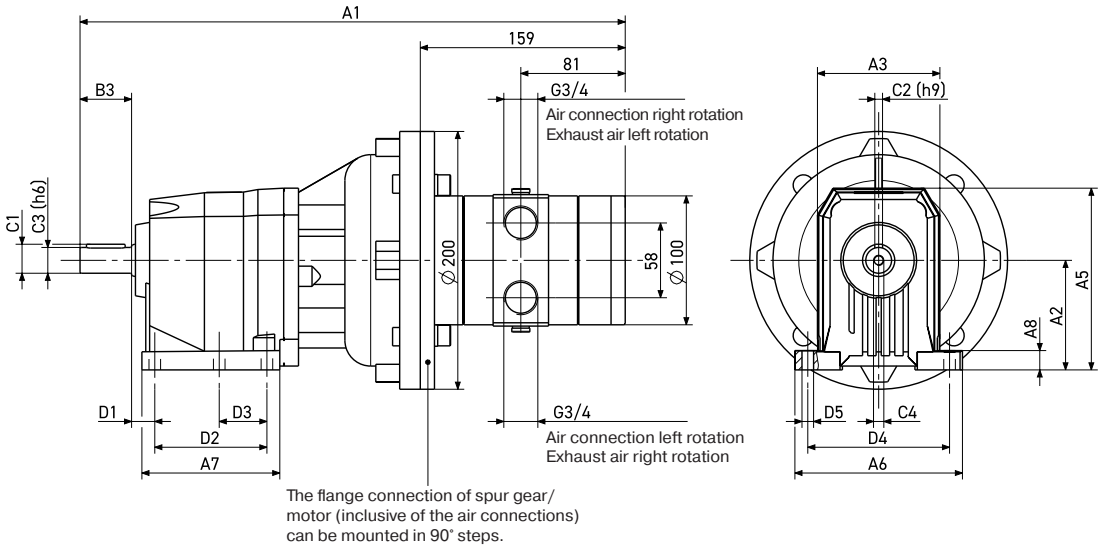

Order code	Dimensions (mm)																
	A1	A2	A3	A5	A6	A7	A8	B3	C1	C2	C3	C4	D1	D2	D3	D4	D5
P1V-A320E0080**	423.0	85.0	95.0	141.0	130.0	107.0	15.0	40.0	22.5	6.0	20.0	M8 x 19	18.0	87.0	37.0	110.0	9.0
P1V-A320E0052**	451.0	100.0	110.0	166.0	155.0	137.0	17.0	50.0	28.0	8.0	25.0	M8 x 19	18.0	107.5	47.5	130.0	11.0
P1V-A320E0025**	486.0	110.0	130.0	181.0	190.0	156.0	20.0	60.0	33.0	8.0	30.0	M10 x 22	18.0	130.0	60.0	160.0	11.0
P1V-A320E0011**	515.0	130.0	155.0	223.0	216.0	185.5	18.0	70.0	38.0	10.0	35.0	M10 x 22	19.5	149.5	-	180.0	14.0
P1V-A320E0006**	541.0	155.0	185.0	278.0	270.0	200.0	22.0	80.0	43.0	12.0	40.0	M12 x 28	25.0	156.0	-	225.0	18.0
P1V-A320E0003**	594.0	195.0	210.0	316.0	300.0	232.0	25.0	100.0	53.5	14.0	50.0	M16 x 36	25.0	180.0	-	250.0	18.0

Tel: +45 63 12 83 00 | Email: ps@hymatik.com | www.hymatik.com | Hvidkaervej 27a, DK-5250 Odense SV, Denmark

P1V-A500D00****, Spur gear box (D) - Flange mounting

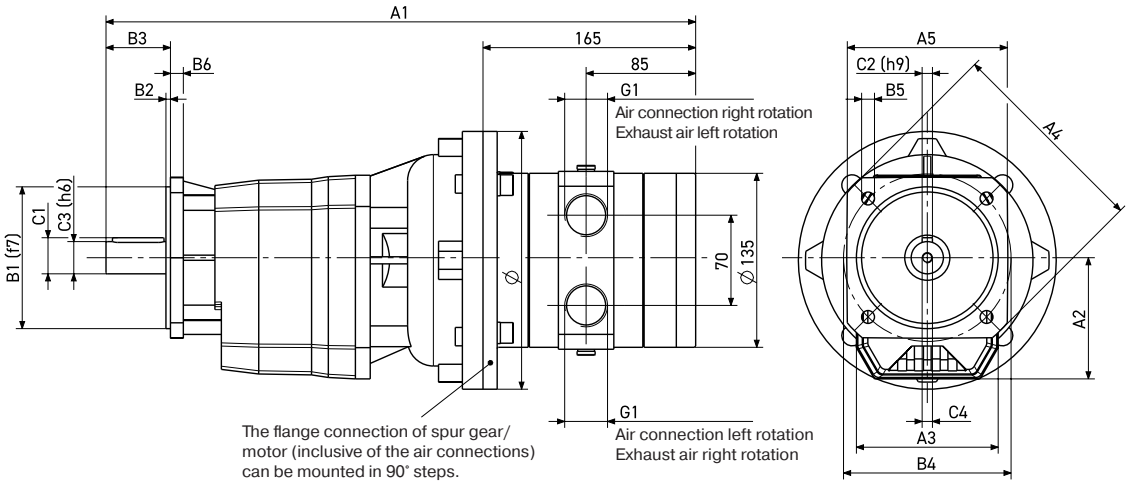

Order code	Dimensions (mm)														
	A1	A2	A3	A4	A5	B1	B2	B3	B4	B5	B6	C1	C2	C3	C4
P1V-A500D0080**	458.0	94.0	110.0	160.0	□ 110	110.0	3.5	50.0	130.0	9.5	10.0	28.0	8.0	25.0	M8 x 19
P1V-A500D0052**	492.0	108.0	130.0	200.0	□ 150	130.0	3.5	60.0	165.0	11.5	12.0	33.0	8.0	30.0	M10 x 22
P1V-A500D0025**	521.0	128.0	155.0	250.0	-	180.0	4.0	70.0	215.0	14.0	13.0	38.0	10.0	35.0	M10 x 22
P1V-A500D0011**	547.0	152.0	185.0	300.0	-	230.0	4.0	80.0	265.0	14.0	16.0	43.0	12.0	40.0	M12 x 28
P1V-A500D0006**	600.0	178.5	210.0	350.0	-	250.0	5.0	100.0	300.0	18.0	18.0	53.5	14.0	50.0	M16 x 36
P1V-A500D0003**	698.0	247.0	320.0	400.0	□ 350	300.0	5.0	140.0	350.0	18.0	20.0	85.0	22.0	80.0	M20 x 42

P1V-A500E00••••, Spur gear box (E) - Foot Bracket mounting

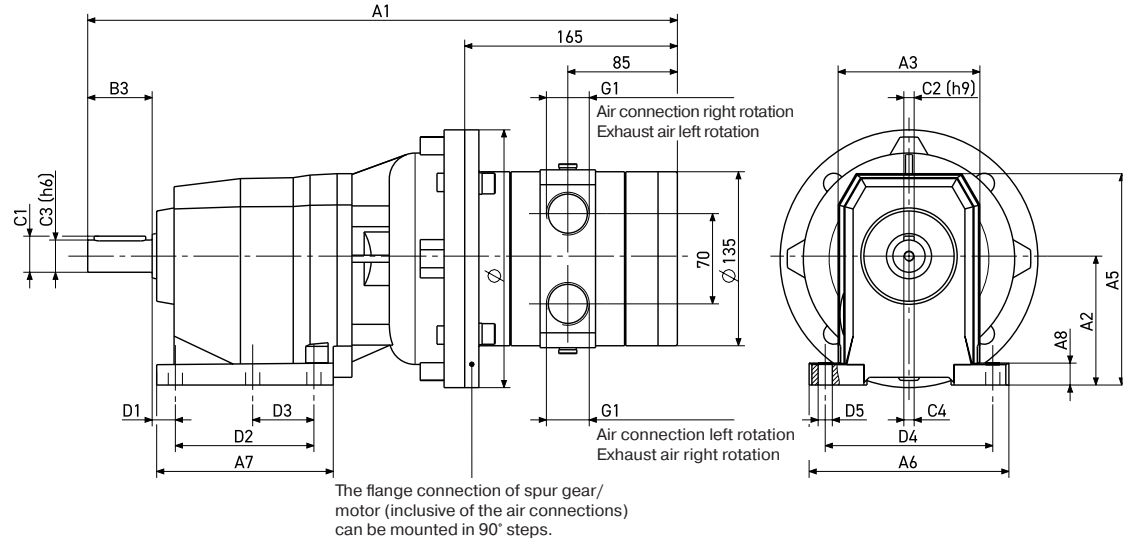

Order code	Dimensions (mm)																
	A1	A2	A3	A5	A6	A7	A8	B3	C1	C2	C3	C4	D1	D2	D3	D4	D5
P1V-A500E0080**	458.0	100.0	110.0	166.0	155.0	137.0	17.0	50.0	28.0	8.0	25.0	M8 x 19	18.0	107.5	47.5	130.0	11.0
P1V-A500E0052**	492.0	110.0	130.0	181.0	190.0	156.0	20.0	60.0	33.0	8.0	30.0	M10 x 22	18.0	130.0	60.0	160.0	11.0
P1V-A500E0025**	521.0	130.0	155.0	223.0	216.0	185.5	18.0	70.0	38.0	10.0	35.0	M10 x 22	19.5	149.5	-	180.0	14.0
P1V-A500E0011**	547.0	155.0	185.0	278.0	270.0	200.0	22.0	80.0	43.0	12.0	40.0	M12 x 28	25.0	156.0	-	225.0	18.0
P1V-A500E0006**	600.0	195.0	210.0	316.0	300.0	232.0	25.0	100.0	53.5	14.0	50.0	M16 x 36	25.0	180.0	-	250.0	18.0
P1V-A500E0003**	698.0	250.0	320.0	420.0	440.0	277.0	35.0	140.0	85.0	22.0	80.0	M20 x 42	33.0	210.0	-	370.0	26.0

Tel: +45 63 12 83 00 | Email: ps@hymatik.com | www.hymatik.com | Hvidkaervej 27a, DK-5250 Odense SV, Denmark

Worm Gear

NOTE! All technical data are based on a working pressure of 6 bar and with oil.
Speed tolerance accuracy -+10%.

Note! Inlet and exhaust air flows are critical for reaching the best performances.

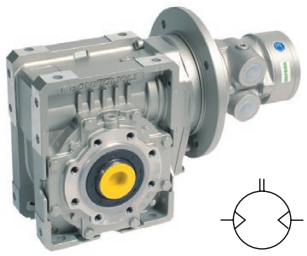

F, G, H: Reversible motor with worm gear box, flange left (F) or right (G), foot bracket or universal (H) mountings

Max power	Free speed	No-minal speed	No-minal torque	Min starting torque	Max gear box permanent torque	Air co-sump-tion	Con-nection	Min pipe ID inlet/ outlet	Weight	Max per-missible shaft loading	Moun-ting	Gear box type	Order Code	Flange	Gear box type	Order Code	Flange	Gear box type	Order Code
[kW]	[rpm]	[rpm]	[Nm]	[Nm]	[Nm]	[l/s]	BSPP	[mm]	[kg]	F radial & axial [N]									
1600	430	320	40.0	42.0	49.0	31.7	G1/2	15/19	8.2	Hollow shaft, See shaft option	Bracket	W49KA	**P1V-A160H0043****	On left	W49F	**P1V-A160F0043****	On right	W49F	**P1V-A160G0043****
1600	200	150	79.0	67.0	125.0	31.7	G1/2	15/19	11.5		Universal	W63U	**P1V-A160H0020****	Option	-	-	Option	-	-
1600	95	70	159.0	121.0	250.0	31.7	G1/2	15/19	18.8		Universal	W86U	**P1V-A160H0010****	Option	-	-	Option	-	-
1600	75	55	191.0	137.0	225.0	31.7	G1/2	15/19	18.8		Universal	W86U	**P1V-A160H0008****	Option	-	-	Option	-	-
3200	500	350	76.0	86.0	125.0	65.0	G3/4	19/25	16.8	Hollow shaft, See shaft option	Universal	W63U	**P1V-A320H0050****	Option	-	-	Option	-	-
3200	220	150	170.0	174.0	285.0	65.0	G3/4	19/25	24.1		Universal	W86U	**P1V-A320H0022****	Option	-	-	Option	-	-
3200	125	85	280.0	240.0	295.0	65.0	G3/4	19/25	24.1		Universal	W86U	**P1V-A320H0013****	Option	-	-	Option	-	-
3200	62	44	508.0	365.0	660.0	65.0	G3/4	19/25	63.0		Bracket	W130K	**P1V-A320H0006****	On left	W130F	**P1V-A320F0006****	On right	W130F	**P1V-A320G0006****
5000	500	30	143.0	160.0	205.0	96.7	G1	25/32	26.6	Hollow shaft, See shaft option	Universal	W75U	**P1V-A500H0050****	Option	-		Option	-	-
5000	220	130	315.0	325.0	480.0	96.7	G1	25/32	45.0		Universal	W110U	**P1V-A500H0022****	Option	-		Option	-	-
5000	125	75	509.0	439.0	595.0	96.7	G1	25/32	48.0		Universal	W110U	**P1V-A500H0013****	Option	-		Option	-	-
500	55	37	980.0	930.0	1250.0	96.7	G1	25/32	79.0		Bracket	WR130A	**P1V-A500H0006****	On left	WR130F	**P1V-A500F0006****	On right	WR130F	**P1V-A500G0006****

** Specify installation position in the order code as in the illustrations, Maximum admissible speed (idling)
Air consumption at the maximum air motor power

Note!
**specify installation position in the order code as in the illustration below.
Example: P1V-A160H0043B3

Note!
Oil-bath gearboxes mean that the installation position must be decided in advance. The installation position determines the volume of oil in the gearbox and location of oil filling and drain plugs.

Important!
Since it is practically impossible to guarantee total self-locking, an external brake must be used to guarantee that vibration can not cause an output shaft to move.

Self-locking
Dynamic self-locking means that the force acting on the output shaft of the gear can not turn the gear further when the air motor is stopped. Dynamic self-locking is only possible when the gear ratio is high, and at low speeds. None of our worm drive gears are completely self-locking in dynamic conditions. Static self-locking means that the force acting on the output shaft of the gear can not begin to turn the shaft. When loads with considerable momentum are driven, it is necessary to have a braking time sufficient to stop the gearbox from being overloaded. It is extremely important that the maximum permitted torque is not exceeded.

Tip: Braking of the air motor can be arranged by either slowly restricting the air supply to the motor until it is completely shut off, or by slowly reducing the supply pressure to zero.

Types of Self-locking
1. Static, not self-locking
2. Static, self-locking - quicker return under vibration - not dynamically self-locking
3. Static, self-locking - return only possible under vibration - good dynamic self-locking

F, G, H: Installation positions, worm gear, foot mounting

B3

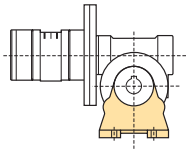

V5

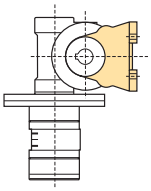

B6

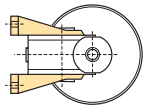

V6

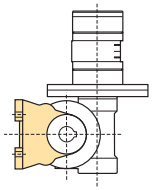

B8

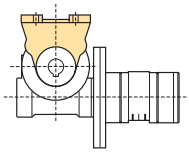

B7

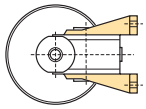

Tel: +45 63 12 83 00 | Email: ps@hymatik.com | www.hymatik.com | Hvidkaervej 27a, DK-5250 Odense SV, Denmark

Dimensions [mm] - Worm Gear

P1V-A160G0043**, worm gear box (G) - Flange on right side

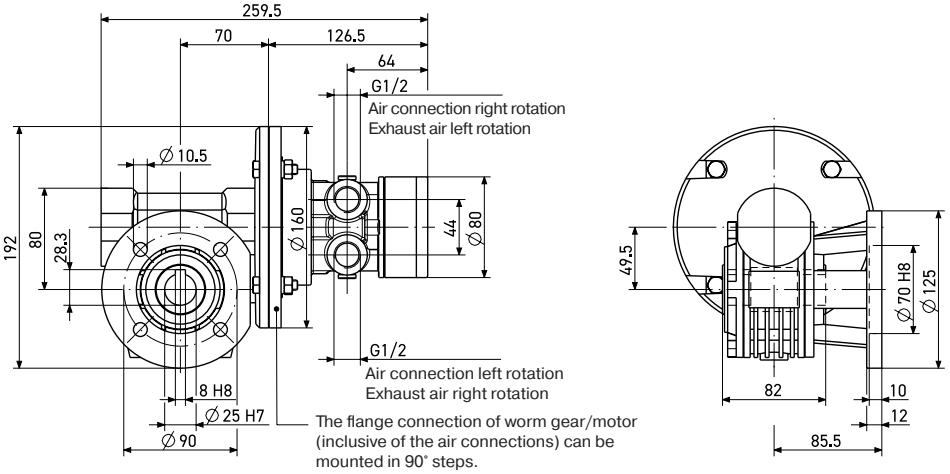

P1V-A160F0043**, worm gear box (F), Flange on left side

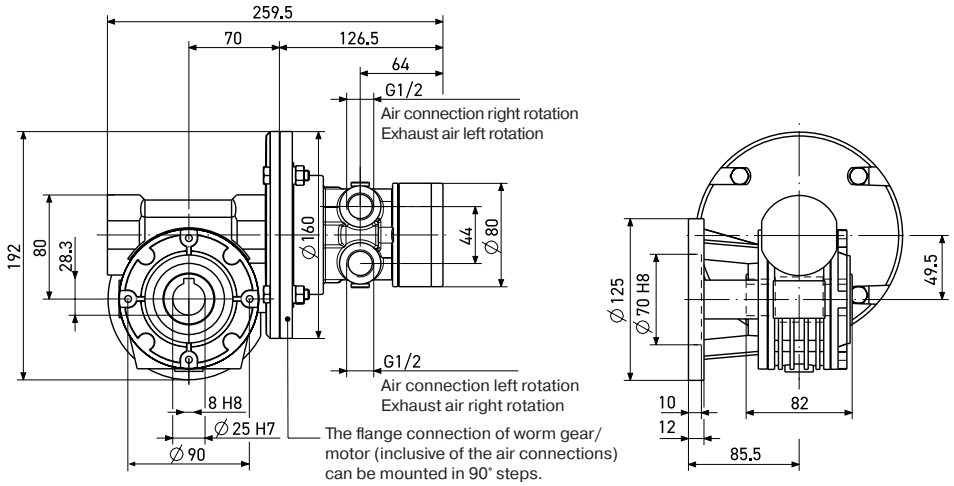

P1V-A160H0043**, worm gear box (H), Foot bracket

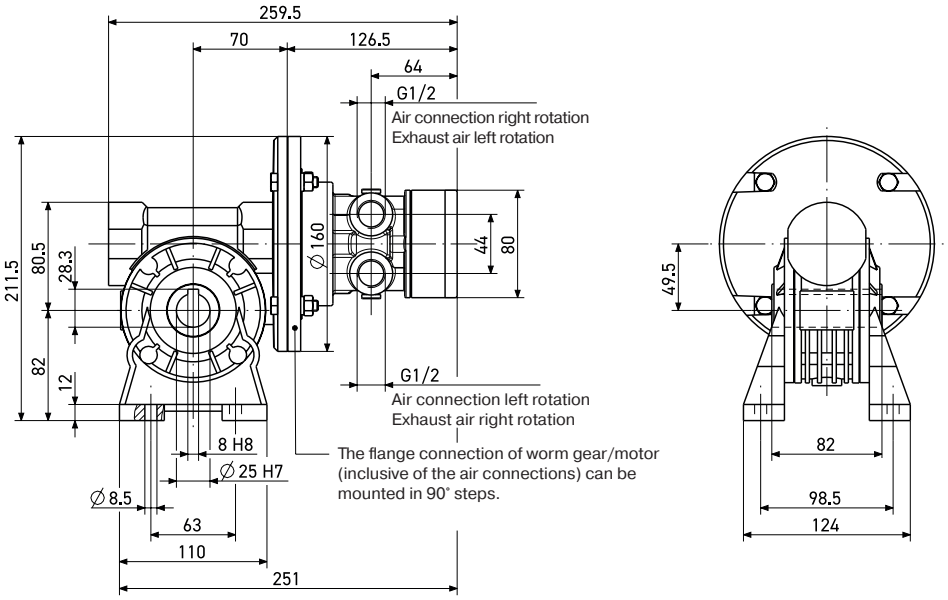

Tel: +45 63 12 83 00 | Email: ps@hymatik.com | www.hymatik.com | Hvidkaervej 27a, DK-5250 Odense SV, Denmark

P1V-A160H00****, worm gear box (H) Universal mounting - Without flanges

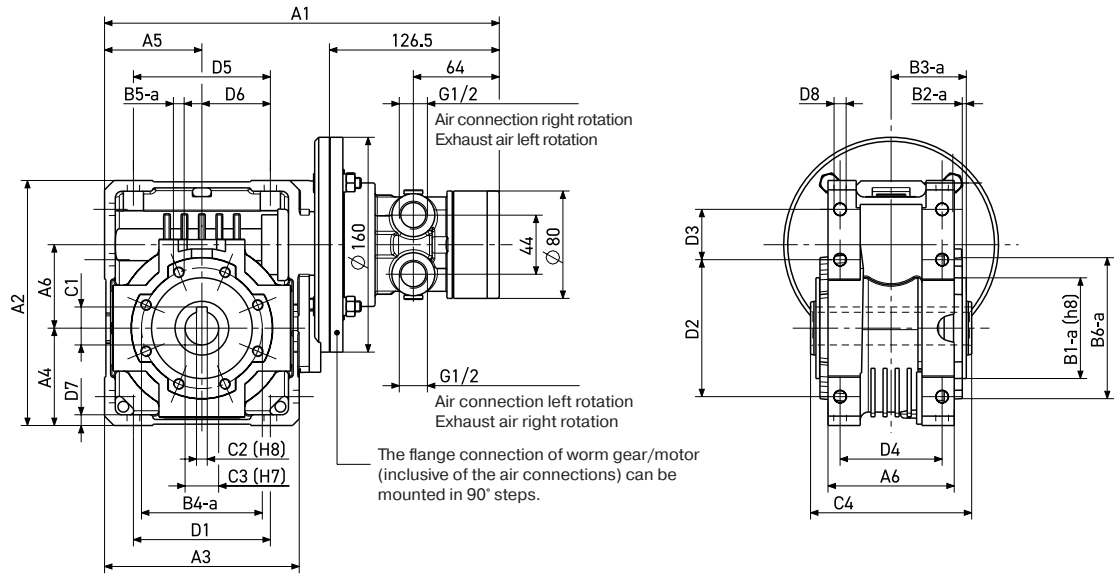

With wide flange - Adaption possible on both sides

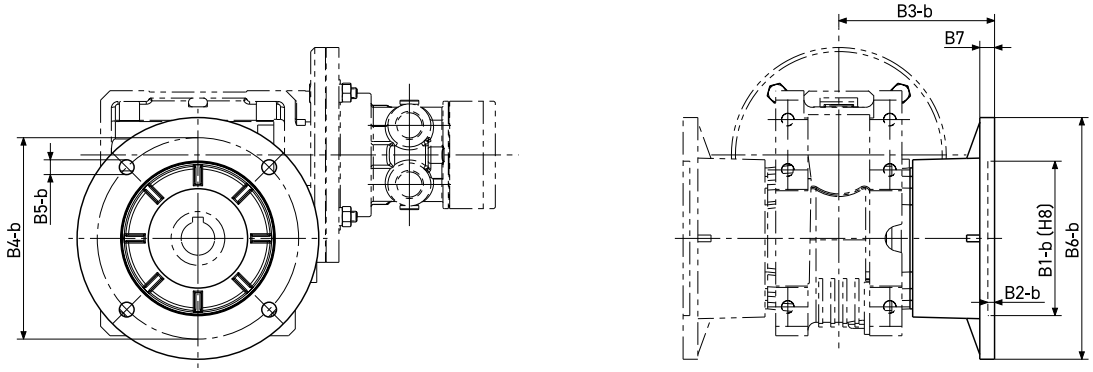

With close flange - Adaption possible on both sides

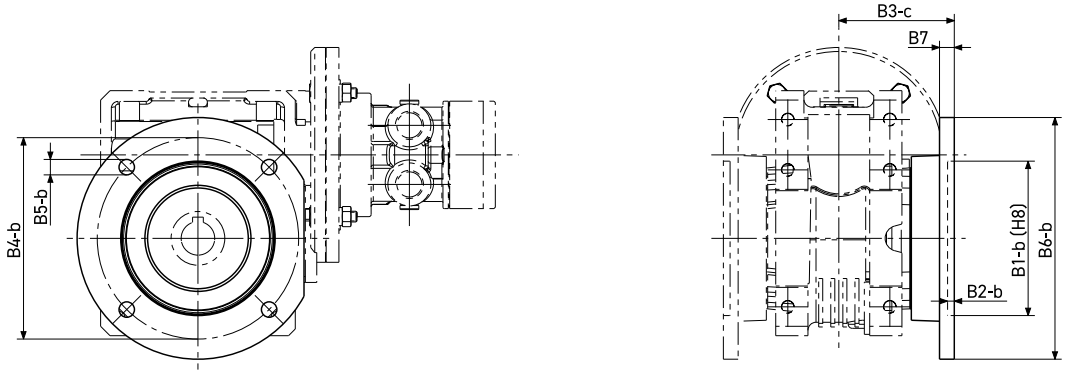

Order code	Dimensions (mm)															
	A1	A2	A3	A4	A5	A6	B1-a	B1-b	B2-a	B2-b	B3-a	B3-b	B3-c	B4-a	B4-b	B5-a
P1V-A160H0020**	294.0	182.5	145.0	72.5	72.5	94.0	75.0	115.0	3.0	5.0	56.0	116.0	-	90.0	150.0	M8x14
P1V-A160H0010**	355.0	245.5	200.0	100.0	100.0	125.0	110.0	152.0	3.5	6.0	68.0	151.0	-	130.0	176.0	M10x18
P1V-A160H0008**	355.0	245.5	200.0	100.0	100.0	125.0	110.0	152.0	3.5	6.0	68.0	-	-	130.0	176.0	M10x18
	B5-b	B6-a	B6-b	B7	C1	C2	C3	C4	D1	D2	D3	D4	D5	D6	D7	D8
P1V-A160H0020**	11.0	105.0	180.0	11.0	28.3	8.0	25.0	120.0	102.0	102.0	37.5	76.0	102.0	51.0	8.0	9.0
P1V-A160H0010**	12.5	150.0	210.0	15.0	38.3	10.0	35.0	140.0	144.0	144.0	45.5	101.0	144.0	72.0	11.0	11.5
P1V-A160H0008**	12.5	150.0	210.0	15.0	38.3	10.0	35.0	140.0	144.0	144.0	45.5	101.0	144.0	72.0	11.0	11.5

Tel: +45 63 12 83 00 | Email: ps@hymatik.com | www.hymatik.com | Hvidkaervej 27a, DK-5250 Odense SV, Denmark

P1V-A320G0006**, worm gear box (G) - Flange on right side

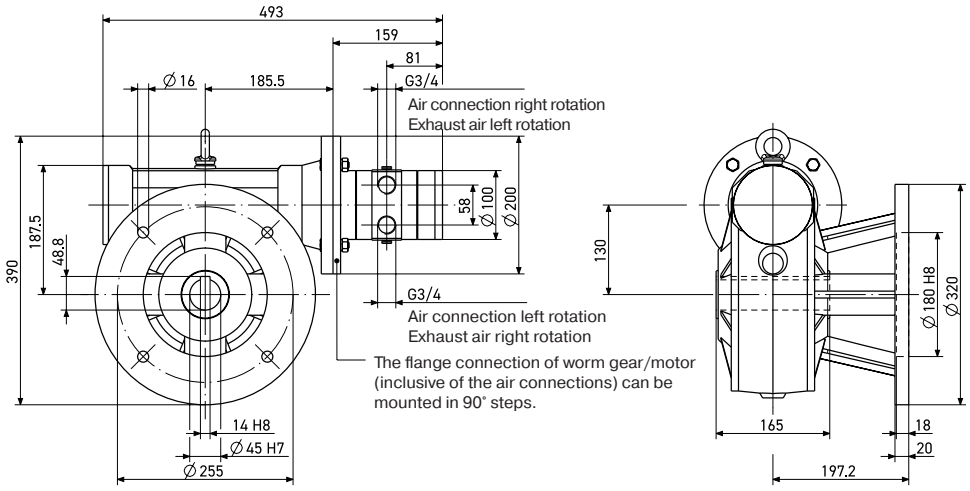

P1V-A320F0006**, worm gear box (F) - Flange on left side

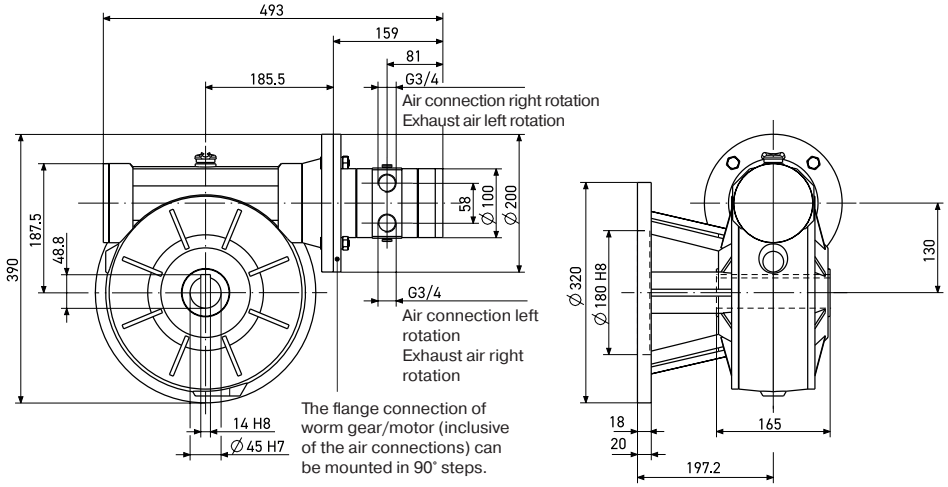

P1V-A320H0006**, worm gear box (H) - Foot bracket

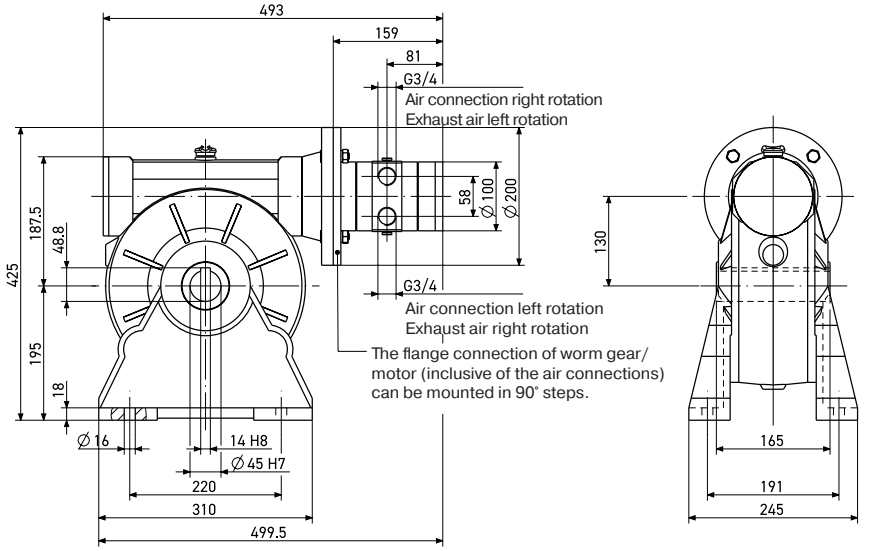

Tel: +45 63 12 83 00 | Email: ps@hymatik.com | www.hymatik.com | Hvidkaervej 27a, DK-5250 Odense SV, Denmark

P1V-A320H00****, worm gear box (H) Universal mounting - Without flanges

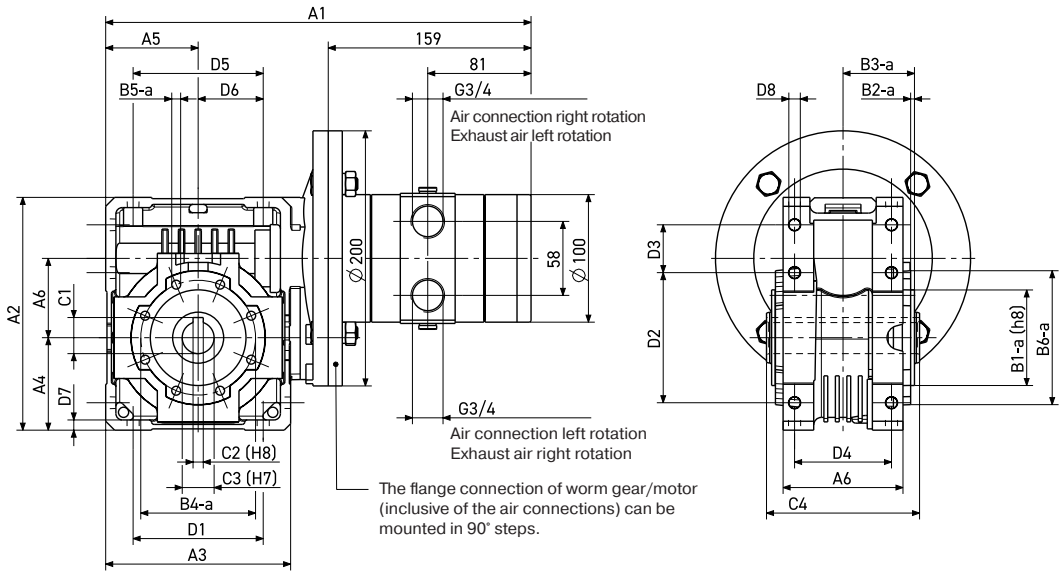

With wide flange - Adaption possible on both sides

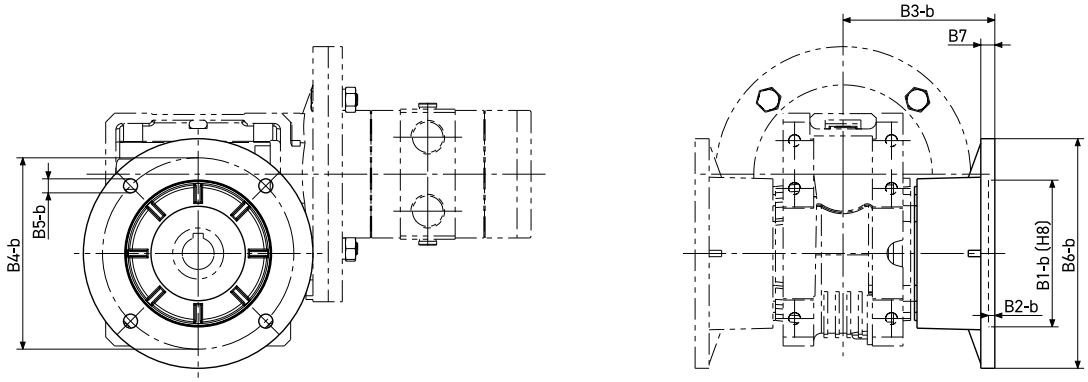

With close flange - Adaption possible on both sides

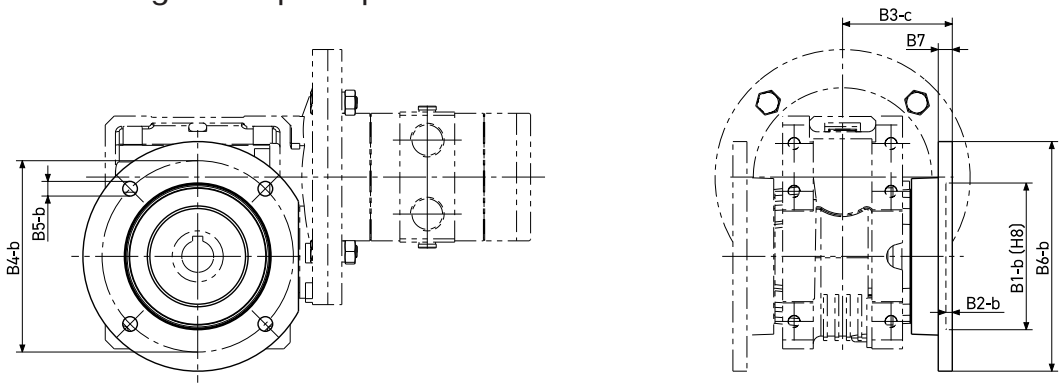

Order code	Dimensions (mm)															
	A1	A2	A3	A4	A5	A6	B1-a	B1-b	B2-a	B2-b	B3-a	B3-b	B3-c	B4-a	B4-b	B5-a
P1V-A320H0050**	334.0	182.5	145.0	72.5	72.5	94.0	75.0	115.0	3.0	5.0	56.0	116.0	86.0	90.0	150.0	M8x14
P1V-A320H0022**	387.0	245.5	200.0	100.0	100.0	125.0	110.0	152.0	3.5	6.0	68.0	151.0	110.5	130.0	176.0	M10x18
P1V-A320H0013**	387.0	245.5	200.0	100.0	100.0	125.0	110.0	152.0	3.5	6.0	68.0	-	110.5	130.0	176.0	M10x18
	B5-b	B6-a	B6-b	B7	C1	C2	C3	C4	D1	D2	D3	D4	D5	D6	D7	D8
P1V-A320H0050**	11.0	105.0	180.0	11.0	28.3	8.0	25.0	120.0	102.0	102.0	37.5	76.0	102.0	51.0	8.0	9.0
P1V-A320H0022**	12.5	150.0	210.0	15.0	38.3	10.0	35.0	140.0	144.0	144.0	45.5	101.0	144.0	72.0	11.0	11.5
P1V-A320H0013**	12.5	150.0	210.0	15.0	38.3	10.0	35.0	140.0	144.0	144.0	45.5	101.0	144.0	72.0	11.0	11.5

Tel: +45 63 12 83 00 | Email: ps@hymatik.com | www.hymatik.com | Hvidkaervej 27a, DK-5250 Odense SV, Denmark

P1V-A500G0006**, worm gear box (G) - Flange on right side

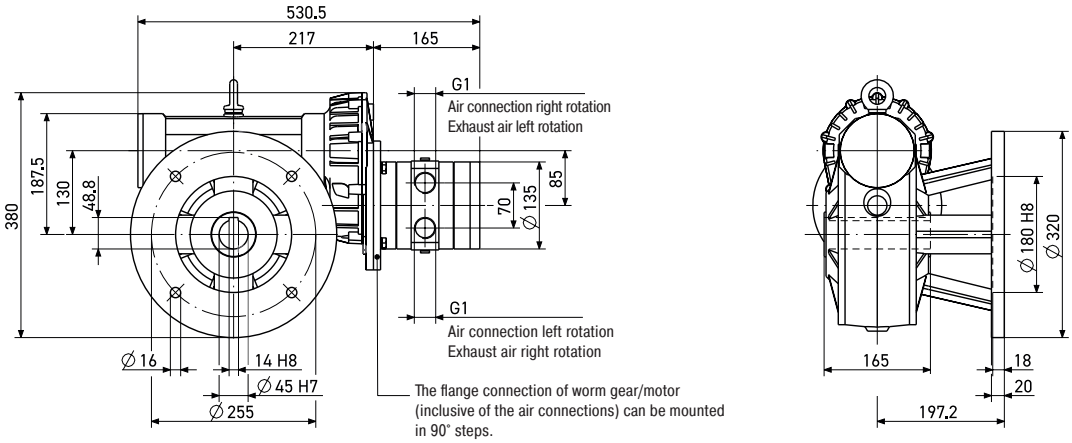

P1V-A500F0006**, worm gear box (F) - Flange on left side

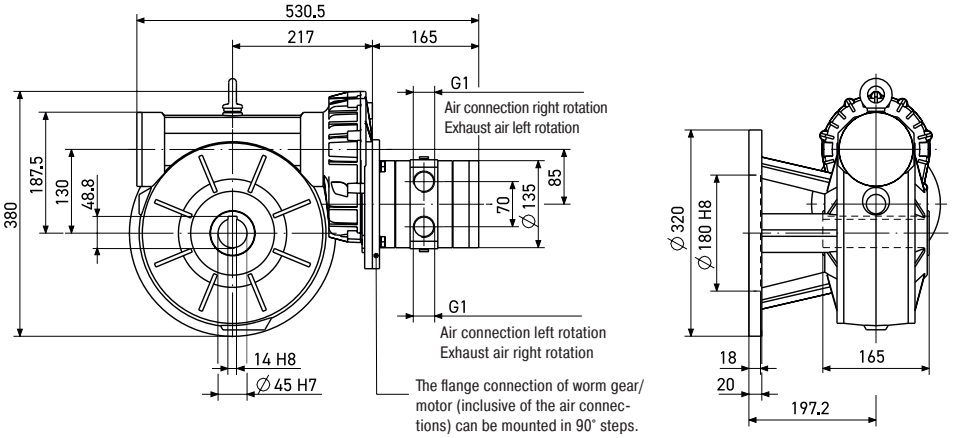

P1V-A500H0006**, worm gear box (H) - Foot bracket

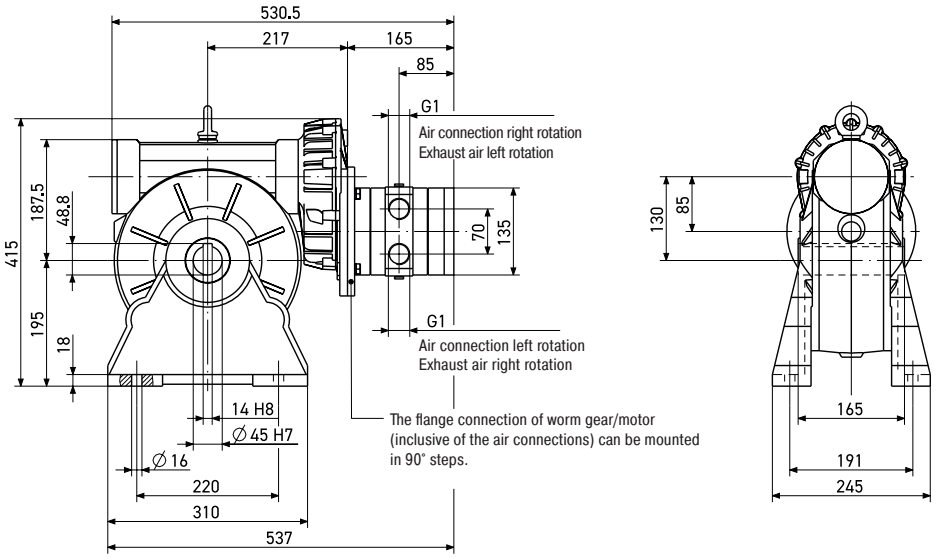

Tel: +45 63 12 83 00 | Email: ps@hymatik.com | www.hymatik.com | Hvidkaervej 27a, DK-5250 Odense SV, Denmark

P1V-A500H00****, worm gear box (H) Universal mounting - Without flanges

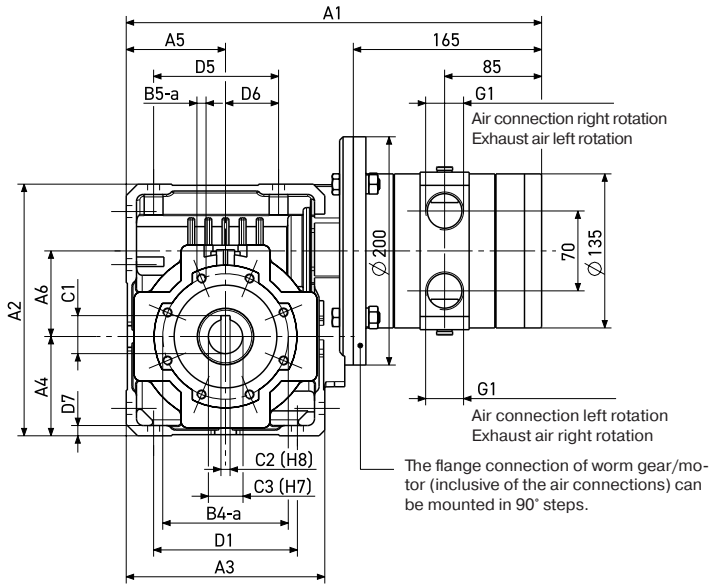

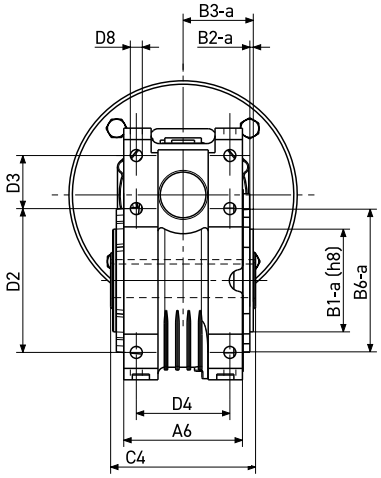

With wide flange - Adaption possible on both sides

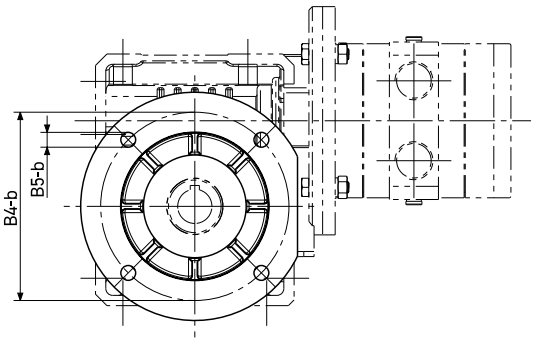

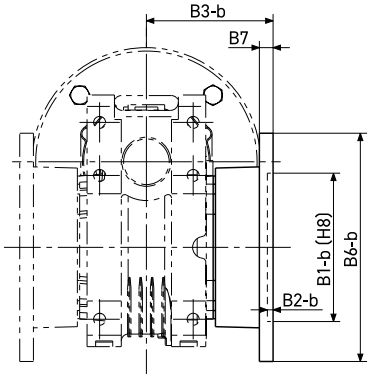

With close flange - Adaption possible on both sides

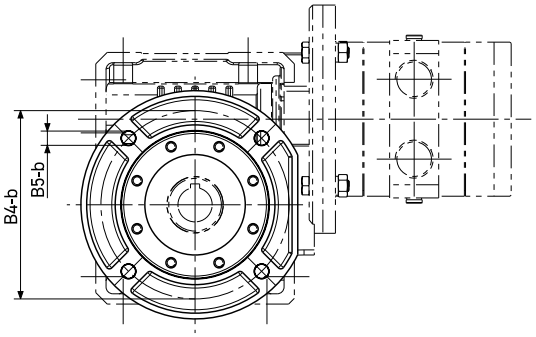

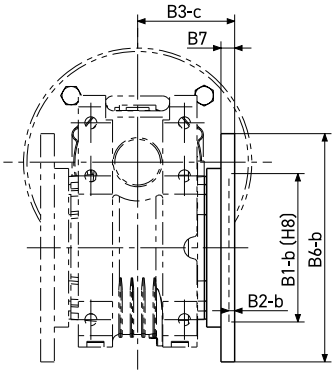

Order code	Dimensions (mm)															
	A1	A2	A3	A4	A5	A6	B1-a	B1-b	B2-a	B2-b	B3-a	B3-b	B3-c	B4-a	B4-b	B5-a
P1V-A500H0050**	364.0	220.5	174.0	87.0	87.0	75.0	90.0	130.0	3.0	5.0	61.5	110.0	85.0	110.0	165.0	M8 x 14
P1V-A500H0022**	433.0	308.0	250.0	125.0	125.0	110.1	130.0	170.0	3.5	12.0	76.5	179.5	131.5	165.0	230.0	M12 x 19
P1V-A500H0013**	433.0	308.0	250.0	125.0	125.0	110.1	130.0	170.0	3.5	12.0	76.5	179.5	131.5	165.0	230.0	M12 x 19
	B5-b	B6-a	B6-b	B7	C1	C2	C3	C4	D1	D2	D3	D4	D5	D6	D7	D8
P1V-A500H0050**	12.5	125.0	200.0	12.0	33.3	8.0	30.0	127.0	126.0	126.0	46.5	82.0	109.5	46.5	9.0	10.5
P1V-A500H0022**	13.0	200.0	280.0	20.0	45.3	12.0	42.0	155.0	184.0	184.0	58.0	115.0	174.0	82.0	14.0	14.0
P1V-A500H0013**	13.0	200.0	280.0	20.0	45.3	12.0	42.0	155.0	184.0	184.0	58.0	115.0	174.0	82.0	14.0	14.0

Tel: +45 63 12 83 00 | Email: ps@hymatik.com | www.hymatik.com | Hvidkaervej 27a, DK-5250 Odense SV, Denmark

Shafts with keys and additional flanges for motors with worm gear boxes

Single-ended shafts with keys for motors with worm gear boxes (F, G, H types)

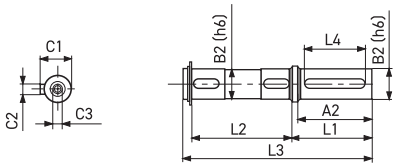

Order code	for hollow shaft	max. radial force	max. axial force	Weight	Dimensions (mm)								
	mm	N	N	kg	A2	B2	C1	C2	C3	L1	L2	L3	L4
9121510242	Ø25 x 82	3450	690	0.6	60.0	25.0	28.0	8.0	M8	65.0	82.0	154.0	50.0
9121510243	Ø25 x 120	5000	1000	0.75	60.0	25.0	28.0	8.0	M8	65.0	120.0	192.0	50.0
P1V-A/107573	Ø30 x 127	6200	1240	0.85	60.0	30.0	33.0	8.0	M10	65.0	127.0	199.0	50.0
9121510244	Ø35 x 140	7000	1400	1.6	60.0	35.0	38.0	10.0	M10	65.0	140.0	214.0	50.0
9121510245	Ø42 x 155	8000	1600	2.8	75.0	42.0	45.0	12.0	M12	80.0	155.0	244.0	60.0
9121510246	Ø45 x 165	13800	2760	3.2	80.0	45.0	48.5	14.0	M12	85.0	165.0	261.0	70.0

C2: UNI 6604, DIN 6885

Double-ended shafts with keys for motors with worm gear boxes (F, G, H types)

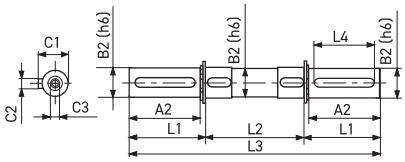

Order code	for hollow shaft	max. radial force	max. axial force	Weight	Dimensions (mm)								
	mm	N	N	kg	A2	B2	C1	C2	C3	L1	L2	L3	L4
9121510247	Ø25x82	3450	690	0.78	60.0	25.0	28.0	8.0	M8	63.2	82.0	208.4	50.0
9121510248	Ø25x120	5000	1000	0.98	60.0	25.0	28.0	8.0	M8	63.2	120.0	246.4	50.0
P1V-A/813122	Ø30x127	6200	1240	1.11	60.0	30.0	33.0	8.0	M10	64.0	127.0	255.0	50.0
9121510249	Ø35x140	7000	1400	2.08	60.0	35.0	38.0	10.0	M10	64.0	140.0	268.0	50.0
9121510250	Ø42x155	8000	1600	3.64	75.0	42.0	45.0	12.0	M12	79.2	155.0	313.4	60.0
9121510251	Ø45x165	13800	2760	4.16	80.0	45.0	48.5	14.0	M12	84.7	165.0	334.4	70.0

C2: UNI 6604, DIN 6885

Material specification

Shaft	High grade steel
Key	Hardened steel

Wide Flanges for motors with worm gear boxes (F, G, H types)

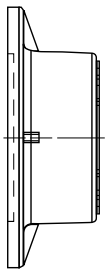

Gear box type & size	Order code	Dimensions (mm)									
	Wide flange	B6-b	B1-b (H8)	B2-b	B3-b	B4-a	B4-b	B5-a	B5-b	B6-a	B7
W63U	P1V-A/830929	180.0	115.0	5.0	116.0	90	150.0	M8x14	11.0	105.0	11.0
W75U	P1V-A/834335	210.0	152.0	6.0	151.0	130	176.0	M10x18	12.5	150.0	15.0
W86U	P1V-A/830931	210.0	152.0	6.0	-	130	176.0	M10x18	12.5	150.0	15.0
W110U	P1V-A/830934	280.0	170.0	12.0	179.5	165.0	230.0	M12x19	13.0	200.0	20.0

Kit contains the flange and the screws to fix on the gear box

Close Flanges for motors with worm gear boxes (F, G, H types)

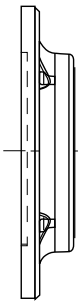

Gear box type & size	Order code	Dimensions (mm)									
	Wide flange	B6-b	B1-b (H8)	B2-b	B3-b	B4-a	B4-b	B5-a	B5-b	B6-a	B7
W63U	P1V-A/830930	180.0	115.0	5.0	116.0	90	150.0	M8x14	11.0	105.0	11.0
W75U	P1V-A/106042	210.0	152.0	6.0	151.0	130	176.0	M10x18	12.5	150.0	15.0
W86U	P1V-A/830932	210.0	152.0	6.0	-	130	176.0	M10x18	12.5	150.0	15.0
W110U	P1V-A/830935	280.0	170.0	12.0	179.5	165.0	230.0	M12x19	13.0	200.0	20.0

Kit contains the flange and the screws to fix on the gear box

Material specification

Flange	Aluminium
Screws	Zinc coated steel

Tel: +45 63 12 83 00 | Email: ps@hymatik.com | www.hymatik.com | Hvidkaervej 27a, DK-5250 Odense SV, Denmark

LUBRICATION AND SERVICE LIFE

Oil and oil mist are things which one tries to avoid to get the best possible working environment. In addition, purchasing, installation and maintenance of oil mist equipment costs money and, above all, time to achieve optimum lubrication effect.
The P1V-A motor is equipped with vanes for intermittent operation as standard for most common applications.

Service interval



The first service is due after approximately 500 hours of operation. After the first service, the service interval is determined by the degree of vane wear.

The following normal service intervals should be applied to in order to guarantee problem-free operation in air motors working continuously at load speeds.

Intermittent lubrication operation

Duty cycle	70%
Max. duration of intermittent use	15 minutes
Oil volume	1 drop oil/Nm3
Filtering 40 µm	app. 750 hours operation
Filtering 5 µm	app. 1,000 hours operation

Continuous lubrication operation

Oil volume	1 drop oil/Nm3
Filtering 40 µm	app. 1,000 hours operation
Filtering 5 µm	app. 2,000 hours operation

Continuous lubrication operation

Oil volume	Oil free
Filtering 40 µm	app. 750 hours operation
Filtering 5 µm	app. 1,000 hours operation

Standard vanes (0, D):
For intermittent lubrication-free operation.
They can operate 70 % of the time for up to 15 minutes without lubrication.
With lubrication, these motors can operation 100 % of the time.

“Black” vanes (C, E):
For continuous lubrication-free operation.
(To obtain the longest possible service life, we recommend no oil in the air.)

SERVICE KITS

The following kits are available for the basic motors, consisting of vanes, O-rings and springs:

Motor type	Motor power Watt	Order code	
		Vanes for intermittent lubrification operation, options "O & D"	Vanes for continuous lubrification operation, options "C & E"
P1V-A160A0900	1600	P1V-6/4450331B	P1V-6/4450332B
P1V-A160D0300	1600	P1V-6/4450331D	P1V-6/4450332D
P1V-A160B0140	1600	P1V-6/4450331E	P1V-6/4450332E
P1V-A160B****	1600	P1V-6/4450331B	P1V-6/4450332B
P1V-A160H******	1600	P1V-6/4450331B	P1V-6/4450332B
P1V-A160F******	1600	P1V-6/4450331B	P1V-6/4450332B
P1V-A160G******	1600	P1V-6/4450331B	P1V-6/4450332B
P1V-A160D******	1600	P1V-6/4450331B	P1V-6/4450332B
P1V-A160E******	1600	P1V-6/4450331B	P1V-6/4450332B
P1V-A320A0700	3200	P1V-6/4450341B	P1V-6/4450342B
P1V-A320D0300	3200	P1V-6/4450341D	P1V-6/4450342D
P1V-A320B0140	3200	P1V-6/4450341E	P1V-6/4450342E
P1V-A320B0060	3200	P1V-6/4450341B	P1V-6/4450342B
P1V-A320H******	3200	P1V-6/4450341B	P1V-6/4450342B
P1V-A320F******	3200	P1V-6/4450341B	P1V-6/4450342B
P1V-A320G******	3200	P1V-6/4450341B	P1V-6/4450342B
P1V-A320D******	3200	P1V-6/4450341B	P1V-6/4450342B
P1V-A320E******	3200	P1V-6/4450341B	P1V-6/4450342B
P1V-A500A0600	5000	P1V-6/4450351B	P1V-6/4450352B
P1V-A500D0300	5000	P1V-6/4450351D	P1V-6/4450352D
P1V-A500B0145	5000	P1V-6/4450351E	P1V-6/4450352B
P1V-A500H******	5000	P1V-6/4450351B	P1V-6/4450352B
P1V-A500F******	5000	P1V-6/4450351B	P1V-6/4450352B
P1V-A500G******	5000	P1V-6/4450351B	P1V-6/4450352B
P1V-A500D******	5000	P1V-6/4450351B	P1V-6/4450352B
P1V-A500E******	5000	P1V-6/4450351B	P1V-6/4450352B
P1V-A600A0700	6000	P1V-6/4450351B	P1V-6/4450352B
P1V-A600D0350	6000	P1V-6/4450351D	P1V-6/4450352D
P1V-A600B0160	6000	P1V-6/4450351E	P1V-6/4450352E
P1V-A900A0600	9000	P1V-6/440246C	-
P1V-AJ00A0600	18000	P1V-6/440246B	-

****** Rest of the air motor order code

For more information about our maintenance services, please contact your local parker sales office.

Tel: +45 63 12 83 00 | Email: ps@hymatik.com | www.hymatik.com | Hvidkaervej 27a, DK-5250 Odense SV, Denmark

ORDER KEY

P	1	V	-	A	1	6	0	E	0	0	6	6	B	6

Air Motor Family

P1V-A	Power Line Air Motor

Size (power)

Free/max speed

Installation position

Function		Optional function *			
		0	C	D	E
		Stan-dard vannes	"Black" vannes	0 with brake	C with brake
A	Basic motor without gear box	✓	✓	✓	✓
B	With planetary gear box	✓	✓		
D	With helical (spur) gear box, flange mounting	✓	✓		
E	With helical (spur) gear box, foot bracket mounting	✓	✓		
F	With worm gear box, flange mounting left side	✓	✓		
G	With worm gear box, flange mounting right side	✓	✓		
H	With worm gear box, foot bracket or universal mountings	✓	✓		

Note:
This model code can not be used for creating new part numbers. All possible combinations between motor size, function and free speed are in all previous pages.

Air motor use in the application is linked to the vannes material
* 0, D standard vannes for intermittent use, vannes are spring loaded
* C, E "black" vannes for continuous use, vannes are spring loaded

A: Free installation positions, basic motor

B: Free installation positions, planetary gear

D: Installation positions, helical gear and flange mounting

B5 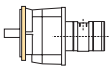 V1  V3 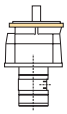

E: Installation positions, helical gear and foot mounting

V5 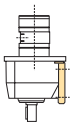 V6 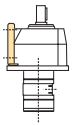 B3 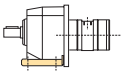

B8 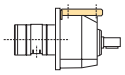 B7 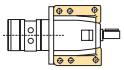 B6 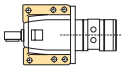

F, G, H: Installation positions, worm gears

B3 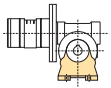 V6 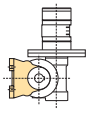 V5 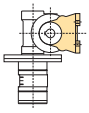

B8 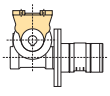 B6  B7 

		Function						
	Installation position	A	B	D	E	F	G	H
	Free installation	✓	✓					
	Horizontal mounting							
B3	Foot bottom				✓	✓	✓	✓
B5	Flange			✓				
B6	Foot left side				✓	✓	✓	✓
B7	Foot right side				✓	✓	✓	✓
B8	Foot top				✓	✓	✓	✓
	Vertical mounting							
V1	Flange downward			✓				
V3	Flange upward			✓				
V5	Foot upward				✓	✓	✓	✓
V6	Foot downward				✓	✓	✓	✓

Note!
Oil-bath gearboxes mean that the installation position must be decided in advance. The installation position determines the volume of oil in the gearbox and location of oil filling and drain plugs.

Standard vanes (0, D):
For intermittent lubrication-free operation. They can operate 70 % of the time for up to 15 minutes without lubrication. With lubrication, these motors can operation 100 % of the time.

"Black" vanes (C, E):
For continuous lubrication-free operation.
(To obtain the longest possible service life, we recommend no oil in the air.)

Tel: +45 63 12 83 00 | Email: ps@hymatik.com | www.hymatik.com | Hvidkaervej 27a, DK-5250 Odense SV, Denmark

www.parker.com

PNDE1000TCUK 11/2025

© 2025 Parker Hannifin EMEA Sarl. All Rights Reserved.