hymatik



PLANETARY GEARHEADS & GEARBOXES

Series PE, PS

Parker

Tel: +45 63 12 83 00 | Email: ps@hymatik.com | www.hymatik.com | Hvidkaervej 27a, DK-5250 Odense SV, Denmark

WARNING — USER RESPONSIBILITY

FAILURE OR IMPROPER SELECTION OR IMPROPER USE OF THE PRODUCTS DESCRIBED HEREIN OR RELATED ITEMS CAN CAUSE DEATH, PERSONAL INJURY AND PROPERTY DAMAGE.

- This document and other information from Parker-Hannifin Corporation, its subsidiaries and authorized distributors provide product or system options for further investigation by users having technical expertise.
- The user, through its own analysis and testing, is solely responsible for making the final selection of the system and components and assuring that all performance, endurance, maintenance, safety and warning requirements of the application are met. The user must analyze all aspects of the application, follow applicable industry standards, and follow the information concerning the product in the current product catalog and in any other materials provided from Parker or its subsidiaries or authorized distributors.
- To the extent that Parker or its subsidiaries or authorized distributors provide component or system options based upon data or specifications provided by the user, the user is responsible for determining that such data and specifications are suitable and sufficient for all applications and reasonably foreseeable uses of the components or systems.

Tel: +45 63 12 83 00 | Email: ps@hymatik.com | www.hymatik.com | Hvidkaervej 27a, DK-5250 Odense SV, Denmark

Table of Contents

Overview Gearboxes 2
Series PE - Economical Planetary Gearheads, Overview 3
Technical Data 4
Dimensions 6
Motor/Gearhead Combination 9
Order Code 10
Series PS - Precision Planetary Gearboxes, Overview 11
Technical Data 12
Dimensions 14
Sizing 16
Order Code 17

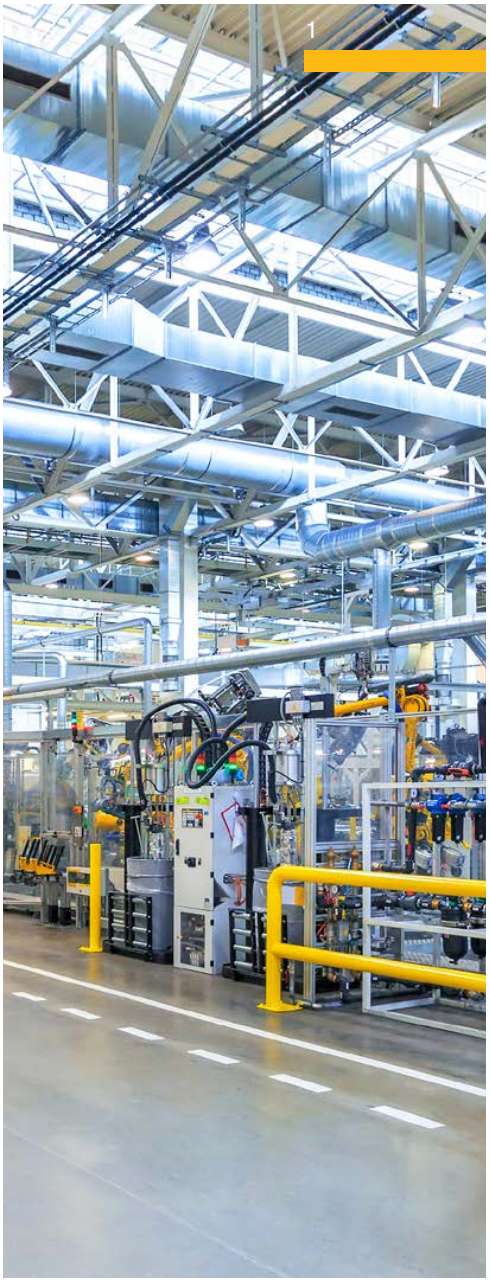

If you have questions about the products contained in this catalog, or their applications, please contact:
Parker Hannifin EMEA Sàrl European Headquarters
parker.com/msge

Tel: +45 63 12 83 00 | Email: ps@hymatik.com | www.hymatik.com | Hvidkaervej 27a, DK-5250 Odense SV, Denmark

PARKER GEARBOXES

Series	PE	PS
		
	www.parker.com/eme/pe	www.parker.com/eme/ps
Description	Economical Planetary Gearboxes	Precision Helical Planetary Gearboxes
Frame size [mm]	40, 60, 90, 115, 155	60, 90, 115, 142
Nominal Output Torque [Nm]	up to 460	up to 430
Radial Load [N]	up to 4600	up to 10 000
Minimum backlash [arcmin]	< 7	< 3
Maximum input speed [min^{-1}]	up to 18 000	up to 6000
Ratio	3 to 64	3 to 100
Torsional rigidity [Nm/arcmin]	0.7 to 52	3 to 50

Tel: +45 63 12 83 00 | Email: ps@hymatik.com | www.hymatik.com | Hvidkaervej 27a, DK-5250 Odense SV, Denmark

ECONOMICAL PLANETARY GEARHEADS - SERIES PE

Overview

Description

The PE is the perfect economy gearbox. This planetary gearbox was especially designed for all applications where a considerably low backlash is not of vital importance.



Features

Excellent price/performance ratio
Input speeds up to 18000 min-1
Low backlash
High output torques
PCS-2 system
High efficiency (96 %)
15 ratios i=3...64
Low noise
High quality (ISO 9001)
Any fitting position possible
Simple motor fitting
Lubricated for life
Direction of rotation equidirectional
Balanced motor pinion

Technical Characteristics

Features	Unit	Division
Geometry		Planetary Gearheads
Type		Inline
Drives sizes	[mm]	40, 60, 90, 115, 155
Maximum input speed	[min-1]	up to 18 000
Nominal torque	[Nm]	460
Radial force	[N]	up to 4600
Service life	[h]	30 000
Minimum backlash	[arcmin]	< 7

Layout / Features

PE2 / PE3 The Economy gearbox with round output flange	PE4 / PE5 The Economy gearbox with square output flange	PE7 Gearbox for high torque applications (in combination with ETH125 electro cylinder)
		

Tel: +45 63 12 83 00 | Email: ps@hymatik.com | www.hymatik.com | Hvidkaervej 27a, DK-5250 Odense SV, Denmark

Technical Data

Parameter	Unit	Ratio		PE2	PE3	PE4	PE5	PE7
Nominal torque $T_{nom\ r}$ / Maximum permissible acceleration torque $T_{acc\ r}$ / Emergency stop torque $T_{em\ r}$ [5] $T_{nom\ r}$ / $T_{acc\ r}$ / $T_{em\ r}$ [5] (1)(2)(3)(4)	[Nm]	1 step	3	11/17.5/22.5	28/45/66	85/136/180	115/184/390	-
			4	15/24/30	38/61/88	115/184/240	155/248/520	460/736/920
			5	14/22/36	40/64/80	110/176/220	195/312/500	445/712/890
			7	8.5/13.5/26	25/40/80	65/104/178	135/216/340	-
			8	6/10/27	18/29/80	50/80/190	120/192/380	-
			10	5/8/27	15/24/80	38/61/200	95/152/480	210/336/420
		2 step	9	16.5/26/33	44/70/88	130/208/260	210/336/500	-
			12	20/32/40	44/70/88	120/192/240	260/416/520	-
			15	18/29/36	44/70/88	110/176/220	230/368/500	-
			16	20/32/40	44/70/88	120/192/240	260/416/520	460736/920
			20	20/32/40	44/70/88	120/192/240	260/416/520	460/736/920
			25	18/29/36	40/64/80	110/176/220	230/368/500	445/712/890
			32	20/32/40	44/70/88	120/192/240	260/416/520	-
			40	18/29/36	40/64/80	110/176/220	230/368/500	460/736/920
			50		-	-	-	445/712/890
			64	7.5/12/27	18/29/80	50/80/190	120/192/380	-
Nominal drive speed at $T_{nom\ r}$ $N_{nom\ r}$ [6]	[min^{-1}]	3		5000	4500	3400*	3400*	-
		4		5000	4500	3450*	3500*	1800*
		5		5000	4500	4000*	3500*	2150*
		7		5000	4500	4000	3500	-
		8		5000	4500	4000	3500	-
		9		5000	4500	4000*	3500*	-
		10		5000	4500	4000	3500	3000
		12		5000	4500	4000*	3500*	-
		15		5000	4500	4000	3500*	-
		16		5000	4500	4000	3500*	2900*
		20...64		5000	4500	4000	3500	3000 (* for ratio 20,25)
Maximum mechanical input speed $N_{max\ r}$ [6]	[min^{-1}]	3...64		18 000	13 000	7000	6500	5500
Maximum radial force Pr_{max} [1] [7]	[N]			160	340	1700	2400	4600
Maximum axial force Pa_{max} [1] [7]	[N]			160	450	2000	2100	6000
Lifetime	[h]			30 000 (lifetime lubrication)				
Backlash	[arcmin]	(1 step)		< 15	< 10	< 7	< 7	<8
		(2 step)		< 19	< 12	< 9	< 9	<10

1) the data refer to an output shaft speed of n2=100 min-1 and application factor KA=1 as well as S1 operating mode for electrical machines and T=30 °C

2) dependent on the respective motor shaft diameter

3) with keyway: for dynamic loads

4) permitted for 30 000 revolutions of the output shaft

5) permitted 1000 times

6) permitted operating temperatures may not be exceeded.

7) referred to the center of the output shaft

* at 50 % Tnom r and S1

Tel: +45 63 12 83 00 | Email: ps@hymatik.com | www.hymatik.com | Hvidkaervej 27a, DK-5250 Odense SV, Denmark

Parameter	Unit	Ratio		PE2	PE3	PE4	PE5	PE7
Efficiency at full load [8]	%	(1 step)		97				
		(2 step)		95				
Noise level at 3000 min^{-1} [9]	[dB (A)]			58	58	60	65	70
Torsional stiffness [8]	[Nm/arcmin]	(1 step)		0.7 - 1	1.7 - 2.3	5.2 - 7	11.3 - 15.2	38.5 - 52
		(2 step)		0.8 - 1	1.9 - 2.3	5.7 - 7	12.3 - 15.2	39.5 - 52
Operating temperature [10]	[°C]			-25 ... +90				
Lubrication				Lifetime lubrication				
Orientation				Any				
Direction of Rotation				Same as input				
Product Enclosure Rating				IP54				
Moment of inertia [11]	[kgmm^2]	1 step	3	3.1	13.5	77	263	-
			4	2.2	9.3	52	179	707.3
			5	1.9	7.8	45	153	604.6
			7	1.8	7.2	42	141	-
			8	1.7	6.5	39	132	-
			10	1.6	6.4	39	130	466.3
		2 step	9	3.0	13.1	74	262	-
			12	2.9	12.7	72	256	-
			15	2.3	7.7	71	253	-
			16	2.2	8.8	50	175	615.6
			20	1.9	7.5	44	150	519.4
			25	1.9	7.5	44	149	514.7
			32	1.7	6.4	39	130	-
			40	1.6	6.4	39	130	445.4
			50		-	-	-	975.4
			64	1.6	6.4	39	130	-
Weight	[kg]	(1 step)			0.9	3.2	6.6	16.5
		(2 step)			1.1	3.7	8.6	20.5

[8] depends on the ratio

[9] Noise level at a distance of 1 m; measured at a drive speed of n_1=3000 min^{-1} without load; i=5

[10] referred to the center of the housing surface

[11] Inertia refers to the input shaft and to the standard motor shaft diameter D20

Tel: +45 63 12 83 00 | Email: ps@hymatik.com | www.hymatik.com | Hvidkaervej 27a, DK-5250 Odense SV, Denmark

Dimensions PE2 / PE3

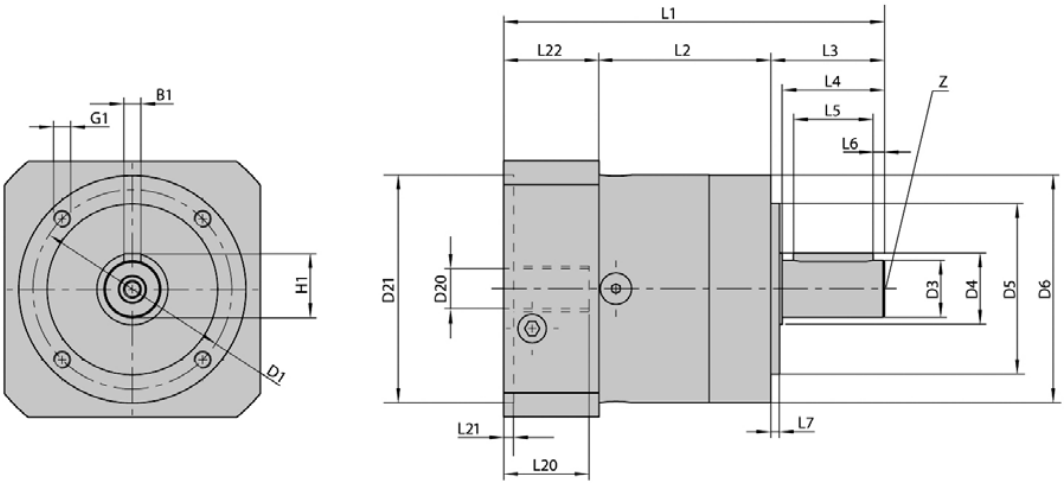

All dimensions in mm			PE2	PE3	
B1	Keyway DIN 6885 T1		3	5	
D1	Flange bolt circle		34	52	
D2	Mounting bore		-	-	
D3	Shaft diameter		10	14	
D4	Shaft collar		12	17	
D5	Centering		26	40	
D6	Housing diameter		40	60	
D20	Hole		6	9	
D21	Centering diameter for motor		30	40	
G1	Tapped hole x depth		M4x6	M5x8	
H1	Keyway DIN 6885 T1		11.2	16	
L1	Overall length	1 step	93.5	106.5	
		2 step	106.5	119	
L2	Housing length	1 step	39	47	
		2 step	52	59.5	
L3	Input shaft end		26	35	
L4	Shaft end to collar		23	30	
L5	Length of keyway		18	25	
L6	Distance to shaft end		2.5	2.5	
L7	Pilot		2	3	
L8	Flange width		-	-	
L22	Motor flange length		28.5	24.5	
Q1	Flange cross section		-	-	
Z	Centering bore DIN332, sheet 2, form DR		M3x9	M5x12	

Tel: +45 63 12 83 00 | Email: ps@hymatik.com | www.hymatik.com | Hvidkaervej 27a, DK-5250 Odense SV, Denmark

Dimensions PE4 / PE5

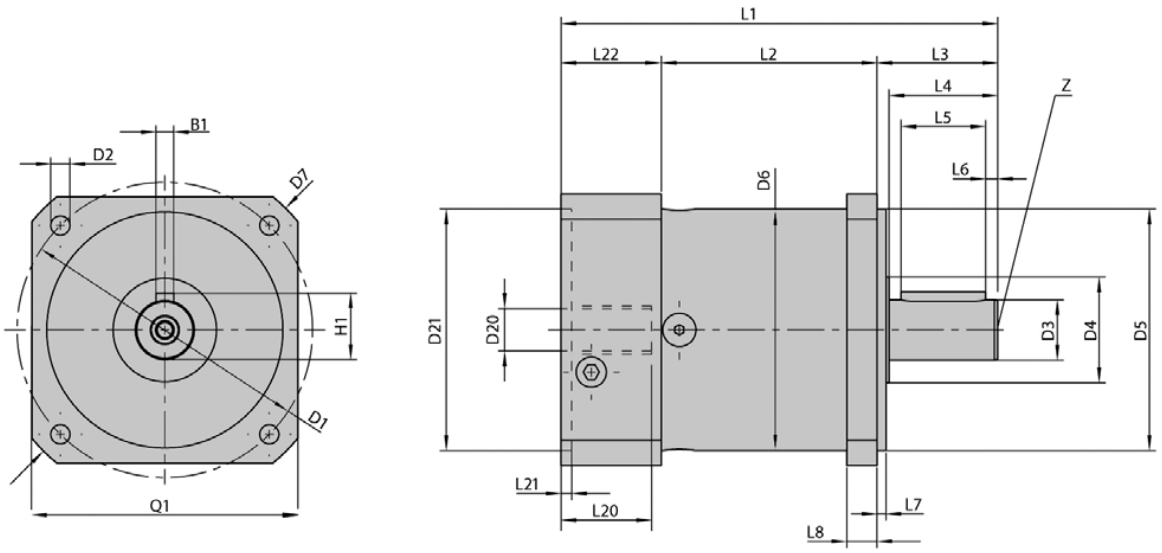

All dimensions in mm			PE4	PE5	
B1	Keyway DIN 6885 T1		6	8	
D1	Flange bolt circle		100	130	
D2	Mounting bore		6.5	8.5	
D3	Shaft diameter		20	25	
D4	Shaft collar		35	35	
D5	Centering		80	110	
D6	Housing diameter		80	115	
D20	Hole		14	19	
D21	Centering diameter for motor		80	95	
G1	Tapped hole x depth		-	-	
H1	Keyway DIN 6885 T1		22.5	28	
L1	Overall length	1 step	145	201.5	
		2 step	162.5	229.5	
L2	Housing length	1 step	71.5	99	
		2 step	89	127	
L3	Input shaft end		40	55	
L4	Shaft end to collar		36	50	
L5	Length of keyway		28	40	
L6	Distance to shaft end		4	5	
L7	Pilot		3	4	
L8	Flange width		10	15	
L22	Motor flange length		33.5	47.5	
Q1	Flange cross section		90	115	
Z	Centering bore DIN332, sheet 2, form DR		M6x16	M10x22	



Tel: +45 63 12 83 00 | Email: ps@hymatik.com | www.hymatik.com | Hvidkaervej 27a, DK-5250 Odense SV, Denmark

Dimensions PE7

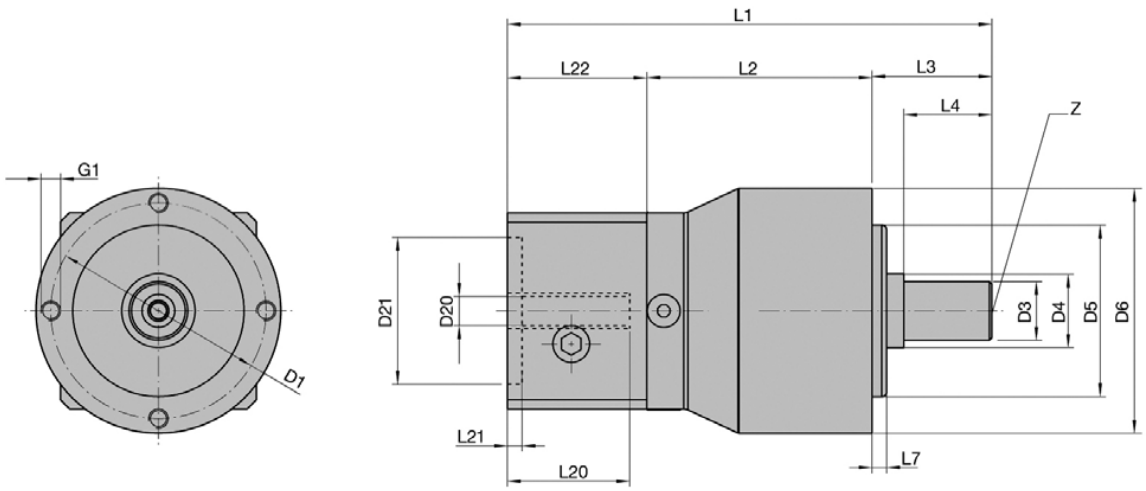

All dimensions in mm			PE7	
D1	Flange bolt circle		140	
D2	Mounting bore		-	
D3	Shaft diameter		40	
D4	Shaft collar		55	
D5	Centering		120	
D6	Housing diameter		155	
D20	Hole			
D21	Centering diameter for motor			
G1	Tapped hole x depth		M10x20	
L1	Overall length	1 step		
		2 step		
L2	Housing length	1 step	100	
		2 step	144.5	
L3	Input shaft end		97	
L4	Shaft end to collar		82	
L7	Pilot		8	
L8	Flange width		-	
L22	Motor flange length			
Q1	Flange cross section		-	
Z	Centering bore DIN332, sheet 2, form DR		M16x36	

Tel: +45 63 12 83 00 | Email: ps@hymatik.com | www.hymatik.com | Hvidkaervej 27a, DK-5250 Odense SV, Denmark

Motor/Gearhead Combination

	Motor 1	Motor 2	Motor 3	Order Code (Gearhead)	Mounting thread G3
PE2	SMH40			PE2 XXX 10 M 030/046/06/25	M4
PE3	SMH60/B08/09		MH056/B05/09	PE3 XXX 10 M 040/063/09/20	M5
			MH056/B05/11	PE3 XXX 10 M 040/063/11/23	M5
	NX205/NX210			PE3 XXX 10 M 040/063/11/25	M5
	SMH60/B05/11	NX310	MH070/B05/11	PE3 XXX 10 M 060/075/11/23	M5
			MH070/B05/14	PE3 XXX 10 M 060/075/14/30	M5
	SY56 (NEMA 23)			PE3 XXX 10 M 038/066/06/21	M5
	SY87 (NEMA 34)			PE3 XXX 10 M 073/098/09/32	M6
PE4	SMH60/B05/11	NX310	MH070/B05/11	PE4 XXX 10 M 060/075/11/23	M5
	SMH82/B08/14			PE4 XXX 10 M 080/100/14/30	M6
	SMH82/B08/19	NX420/NX430	MH105/B09/19	PE4 XXX 10 M 080/100/19/40	M6
	SMH82/B05/19	SMH100/B05/19	MH105/B05/19	PE4 XXX 10 M 095/115/19/40	M8
	SY107 (NEMA 42)			PE4 XXX 10 M 055/125/15/32	M8
	SY87 (NEMA 34)			PE4 XXX 10 M 073/098/09/32	M6
PE5	MH105/B09/19	NX420/NX430		PE5 XXX 10 M 080/100/19/40	M6
	SMH82/B05/19	SMH100/B05/19	MH105/B05/19	PE5 XXX 10 M 095/115/19/40	M6
	SMH100/B05/24	SMH115/B09/24	MH105/B05/24	PE5 XXX 10 M 095/115/24/50	M8
	SMH115/B07/24	NX620/NX630	MH105/B06/24	PE5 XXX 10 M 110/130/24/50	M8
	SMH115/B05/24		MH145/B05/24	PE5 XXX 10 M 130/165/24/50	M10
PE7	SMH170/B05/38	MH205/B05/38		PE7 XXX 16 M 180/215/38/80	M12

Bold = Preferred motor gearhead combinations

Only for motors with mounting bores (no mounting thread)

Other mounting possibilities available on request (please contact Parker)

Tel: +45 63 12 83 00 | Email: ps@hymatik.com | www.hymatik.com | Hvidkaervej 27a, DK-5250 Odense SV, Denmark

Order Code PE Gearheads

	1	2	3	4	5	6	7	8	9
Order example	**PE**	**3**	**003**	**10**	**M**	**038**	**063**	**06**	**20**

1	**Gearhead Type**	
	PE	Economy planetary gearbox
2	**Gearhead Size**	
	2	PE2
	3	PE3
	4	PE4
	5	PE5
	7	PE7
3	**Ratio**	
	003	3
	...	4, 5, 7, 8, 9, 10, 12, 15, 16, 20, 25, 32, 40, 50
	064	64
4	**Output shaft**	
	16	without keyway
	10	with keyway (not possible for PE7)
5	**Motor connection flange**	
	M	
6	**Pilot diameter**	
	038	38 mm
	...	
	180	180mm
7	**Pilot Center Diameter PCD**	
	063	63 mm
	...	
	215	215 mm
8	**Shaft diameter**	
	06	6 mm
	...	
	42	38 mm
9	**Motor shaft length**	
	20	20 mm
	...	
	110	110 mm

Tel: +45 63 12 83 00 | Email: ps@hymatik.com | www.hymatik.com | Hvidkaervej 27a, DK-5250 Odense SV, Denmark

PRECISION PLANETARY GEARBOXES - SERIES PS

Overview

Description

The Helical Planetary Gearboxes incorporate design solutions to provide superior performance for the most demanding high performance applications.

The PS gearboxes incorporate dual angular contact bearings providing higher radial load capacities while maintaining high input speeds. The construction comprise among others, needle bearings to ensure a longer lifetime. An optimized gearing geometry provides the basis for the universal mounting position.

Common mounting kits promote quicker deliveries and ease of mounting to any servo motor. Mounting to any servo motor is as easy as A-B-C (adapter, bushing, collet).



Features

High radial load capacity:

Angular contact output bearings

Increased service life:

Needle bearings

Life time lubrication

Mounting Kits:

Quicker deliveries and easier mounting

High nominal torque and low backlash:

Helical planetary gearing

High wear resistance:

Plasma Nitriting heat treating

Technical Characteristics

Series	Unit	PS
Gear geometry		Helical Planetary
Type		In-Line
Frame sizes	[mm]	60, 90, 115, 142
Maximum input speed	[min^{-1}]	up to 6000
Nominal torque	[Nm]	27...430
Max. Radial force	[N]	10 000
Life	[h]	20 000
Backlash	[arcmin]	up to <3

Tel: +45 63 12 83 00 | Email: ps@hymatik.com | www.hymatik.com | Hvidkaervej 27a, DK-5250 Odense SV, Denmark

Technical Data

Parameter	Unit	Ratio [8]	PS60	PS90	PS115	PS142
Nominal output torque [1] $T_{nom\ r}$	[Nm]	3, 15, 30	27	76	172	300
		4, 5, 7, 20, 25, 40, 50, 70	37	110	230	430
		10, 100	32	93	205	310
Maximum acceleration torque $T_{acc\ r}$	[Nm]	3, 15, 30	34	105	225	450
		4, 5, 7, 20, 25, 40, 50, 70	48	123	285	645
		10, 100	37	112	240	465
Emergency stop output torque [2] $T_{em\ r}$	[Nm]	3, 15, 30	80	260	600	1100
		4, 5, 7, 20, 25, 40, 50, 70	70	230	500	970
		10, 100	60	200	430	830
Nominal drive speed $N_{nom\ r}$	[min^{-1}]	3	3000	2500	2000	1500
		4, 5	3500	3000	2500	2000
		7, 10, 15	4000	3500	3000	2500
		20, 25, 30	4500	4000	3500	3000
		40, 50	4800	4400	3800	3200
		70, 100	5200	4800	4200	3600
Maximum input speed $N_{max\ r}$ [3]	[min^{-1}]	3...100	6000	5500	4500	4000
Maximum radial force Pr_{max} [4]	[N]		1650	4800	7500	10000
Maximum axial load Pa_{max} [5]	[N]		2100	3600	6800	8800
Life	[h]		20 000 (lifetime lubrication)			
Backlash - standard [6]	[arcmin]	3...10 (1 step)	<6	<6	<4	<4
		15...100 (2 step)	<8	<8	<6	<6
Backlash - reduced [6]	[arcmin]	3...10 (1 step)	<4	<4	<3	<3
		15...100 (2 step)	<6	<6	<5	<5
Efficiency at nominal torque	%	3...10	97	97	97	97
		15...100	94	94	94	94
Noise level at 3000 min^{-1} [7]	[db]	3...100	<62	<62	<65	<66
Torsional rigidity	[Nm/ arcmin]	3...100	3	12	27	50
Operating temperature	[°C]	3...100	-20...90			
Lubrication		3...100	Lifetime lubrication			
Orientation		3...100	any			
Direction of Rotation		3...100	same as input			
Enclosure rating			IP65			
Rotor inertia			see page 20			
Weight	[kg]	3...10	1.3	3.0	7.0	14.0
		15...100	1.7	5.0	10.0	20.0

[1] At nominal speed $N_{nom\ r}$.
[2] Maximum of 1000 stops.
[3] Cycle mode.
[4] Max. radial load applied to the center of the shaft at 100 min^{-1}
[5] Max. axial load at 100 min^{-1}.
[6] Measured at 2 % of rated torque.
[7] Measure at 1 m.
[8] Gearboxes in bold print - ratios with standard reversing play are on stock. (for PS60 to PS115 only)

Tel: +45 63 12 83 00 | Email: ps@hymatik.com | www.hymatik.com | Hvidkaervej 27a, DK-5250 Odense SV, Denmark

Load on Input Shaft

PS60

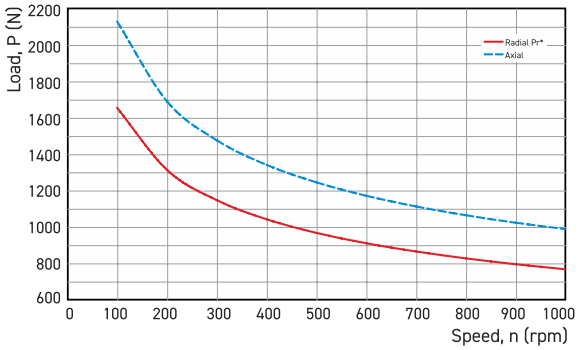

Formulas to calculate radial load (Prx) at any distance "X" from the gearbox mounting surface:

Prx = Pr * 75 mm / (49 mm + X)

PS90

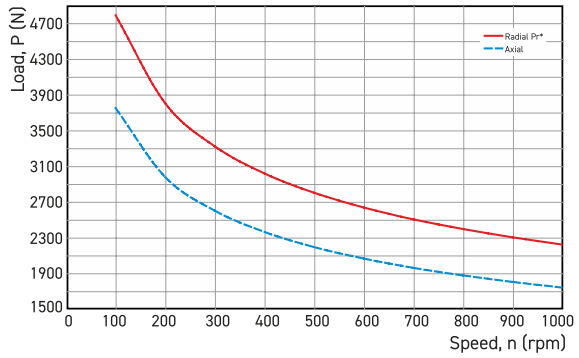

Prx = Pr * 96 mm / (62 mm + X)

PS115

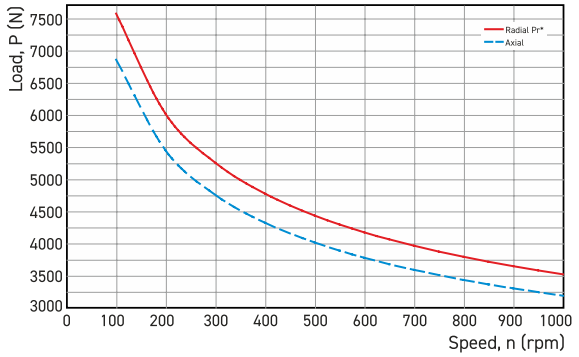

Prx = Pr * 124 mm / (81 mm + X)

PS142

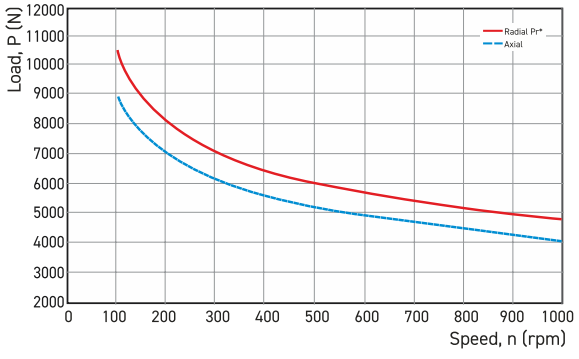

Prx = Pr * 156 mm / (93 + X)

* Radial load applied to center of the shaft.

Tel: +45 63 12 83 00 | Email: ps@hymatik.com | www.hymatik.com | Hvidkaervej 27a, DK-5250 Odense SV, Denmark

Dimensions PS

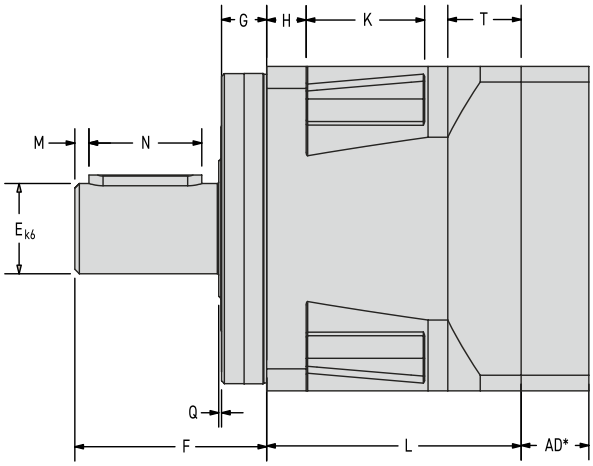

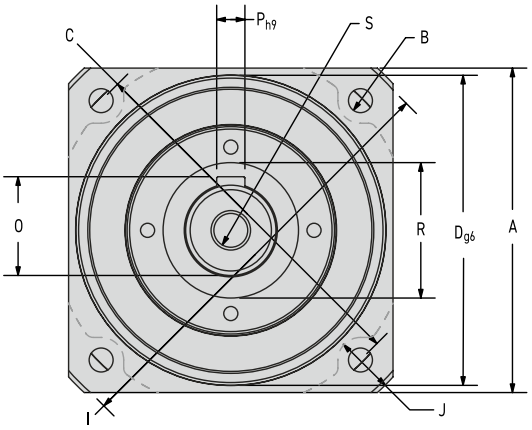

AD*: see table "Universal Mounting Kits"

Frame size	All dimensions in mm	PS60	PS90	PS115	PS142
A	Flange cross section	62	90	115	142
B	Fixing bore	5.5	6.5	8.5	11.0
C	Bolt circle	70	100	130	165
D	Motor pilot Ø	50	80	110	130
E	Drive shaftØ	16	22	32	40
F	Drive shaft length	40	52	68	102
G	Motor pilot depth	11	15	16	20
H	Flange width	8	10	14	15
I	Ø Housing	80	116	152	185
J	Housing recess	5	6.5	7.5	10.0
K	Recess length	24	33	42	45
L1	Length single stage	59.8	69.5	90.2	103.7
L2	Length double stage	94.8	113	143.4	170.7
M	Distance from shaft end	2	3	5	5
N	Keyway length	25	32	40	63
O	Key height	18	24.5	35	43
P	Keyway width	5	6	10	12
Q	Collar height	1	1	1.5	2.5
R	Collar Ø	22	35	50	78
S	Center bore (shaft end)	M5x8	M8x16	M12x25	M16x32
T	Width of flange on output side	20.5	20	26	31

Universal Mounting Kits

Adapter length "AD" dimension

Frame size	Motor shaft length [mm]	Gearbox adapter length [mm]
60	16...35 35.1...41	16.5 22.5
90	20...40 40.1...48	20 28.5
115	22...50 50.1...61	24 35
142	26...62 62.1...82	30 50

PS Rotor Inertia

All rotor inertias refer to the gearbox input

Ratio	Unit	PS60	PS90	PS115	PS142
3	[kgmm²]	25	97	340	1480
4	[kgmm²]	17	67	220	980
5	[kgmm²]	15	51	170	700
7	[kgmm²]	14	41	130	530
10	[kgmm²]	14	37	110	440
15	[kgmm²]	15	52	170	640
20	[kgmm²]	15	51	170	640
25	[kgmm²]	15	51	170	640
30, 40, 50, 70, 100	[kgmm²]	13	37	110	420

Tel: +45 63 12 83 00 | Email: ps@hymatik.com | www.hymatik.com | Hvidkaervej 27a, DK-5250 Odense SV, Denmark

Dimensions Adapter Flange/Motor (Gear Unit Input Side)

Motor [1]	Flange Type	Motor flange	Flange depth	Bolt circle Ø	Bore Ø	Pilot Ø	Pilot depth	Shaft Ø	Shaft length	Adapter flange		
		QF	PC	F	DF	C	S	D	L	Order No.	Fastening thread	AD [2] (short)
SM_60,###,##,5,11,S	B5	70	7	75	6	60	2.5	11	23	MU60-001	M5	16.5
M_70,###,##,5,11,S	B5	70	7	75	6	60	2.5	11	23	MU60-001	M5	16.5
NX320		56	8.5	75	5.5	60	2.5	11	23	MU60-001	M5	16.5
M_56,###,##,5,9,S	B5	56	6.5	63	5.5	40	2.5	9	20	MU60-003	M5	16.5
SM_60,###,##,8,9,S	B5	60	7	63	5.5	40	2.5	9	20	MU60-003	M5	16.5
SY56#	Nema23	56.5	4.83	66.67	5.3	38.1	1.6	6.35	25.4	MU60-005	M5	16.5
M_56,###,##,5,11,S	B5	56	6.5	63	5.5	40	2.5	11	23	MU60-254	M5	16.5
NX205/210		56	7.2-18	63	5.5	40	2.5	11	25	MU60-254	M5	16.5
NX110		42.5	6	50	3.2	30	2.5	9	25	MU60-255	M3	16.5
SM_82,###,###,8,14,S	B8	82	10	100	6.5	80	3.5	14	30	MU60-321	M6	16.5
SM_82,###,##,8,14,S	B8	82	10	100	6.5	80	3.5	14	30	MU90-001	M6	20
SM_82,###,##,8,19,S	B8	82	10	100	6.5	80	3.5	19	40	MU90-085	M6	20
NX420/430		91.5	10.5	100	7	80	3	19	40	MU90-085	M6	20
M_105,###,##,5,19,S	B5	105	10	115	9.5	95	3.5	19	40	MU90-088	M9	20
SM_100,###,##,5,19,S	B5	100	10	115	9	95	3.5	19	40	MU90-088	M8	20
SM_115,###,##,8,19,S	B8	115	10	130	9	95	3.5	19	40	MU90-345	M8	20
M_105,###,##,5,24,S	B5	105	10	115	9.5	95	3.5	24	50	MU115-005	M8	24
SM_100,###,##,5,24,S	B5	100	10	115	9	95	3.5	24	50	MU115-005	M8	24
SM_115,###,##,8,19,S	B8	115	10	130	9	95	3.5	19	40	MU115-006	M8	24
M_105,###,##,6,24,S	B6	105	10	130	9	110	3.5	24	50	MU115-010	M8	24
SM_115,###,##,7,24,S	B7	130	10	130	9	110	3.5	24	50	MU115-010	M8	24
NX620/630		121	10.5	130	9	110	3.5	24	50	MU115-010	M8	24
SM_82,###,##,8,14,S	B8	82	10	100	6.5	80	3.5	14	30	MU115-015	M6	24
SM_115,###,##,5,24,S	B5	145	10	165	11	130	3.5	24	50	MU115-026	M10	24
SM_142,###,##,5,24,S	B5	145	10	165	11	130	3.5	24	50	MU115-026	M10	24
SM_82,###,##,5,19,S	B5	100	10	115	9	95	3.5	19	40	MU115-039	M8	24
SM_100,###,##,5,19,S	B5	100	10	115	9	95	3.5	19	40	MU115-039	M8	24
SM_82,###,##,8,19,S	B8	82	10	100	6.5	80	3.5	19	40	MU115-089	M6	24
SM_115,###,##,8,24,S	B8	115	10	130	9	95	3.5	24	50	MU115-257	M8	24
M_105,###,##,9,24,S	B9	96	10	100	7	80	3.5	24	50	MU115-269	M6	24
SM_170,###,##, ,38,S	B5	170	8	215	14	180	4	38	80	MU142-40410	M12	53
MH205,###,##, ,38,S	B5	205	8	215	14	180	4	38	80	MU142-40410	M12	53

For motors not shown in the list please contact Parker

[1] MB/SMB: for drives TPDM, SLVDN,
MH/SMH: for drives Compax3, PSD

[2] AD: Adapter length (please refer to the "dimensions" chapter)

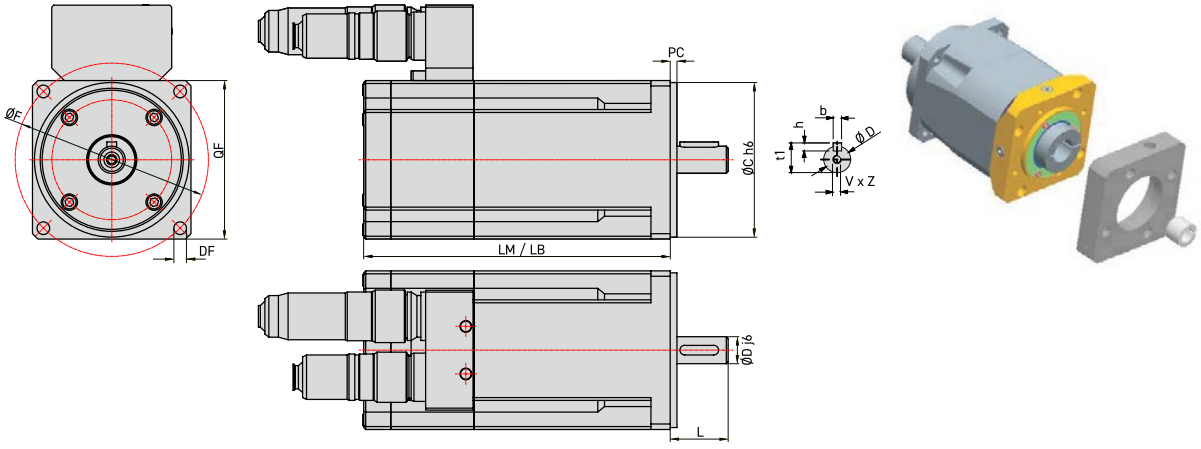

Dimensions [mm]

Tel: +45 63 12 83 00 | Email: ps@hymatik.com | www.hymatik.com | Hvidkaervej 27a, DK-5250 Odense SV, Denmark

1. Gearbox Sizing

Parker has prepared the following procedure to provide a quick method for selecting a gearbox.

Application parameters

- Acceleration time (tacc)
- Continuous run time (tcont)
- Deceleration time (tdec)
- Dwell time (tdwel)
- Acceleration torque (Tacc)
- Continuous torque (Tcont)
- Deceleration torque (Tdec)
- Application speed (Ncont)
- Transmission ratio (i)
- Gearbox nominal torque (Tnom r)
- Max. permissible acceleration torque (Tacc r)
- Percentage of acceleration torque vs. continuous cycle time (ttotal)
- Max. input speed (Nmax r)

2. Duty cycle

Duty cycle = tacc+tcont+tdec / ttotal x 100 %

If duty cycle is <60 % and (tacc+tcont+tdec) is less than 20 minutes, the motion is considered to be intermittent.

If duty cycle is <60 % and (tacc+tcont+tdec) is more than 20 minutes, the motion is considered to be continuous.

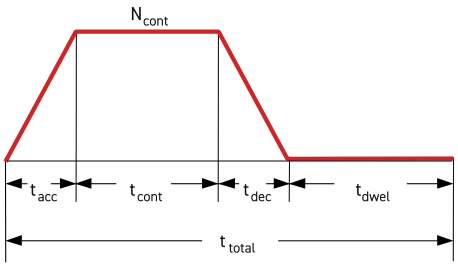

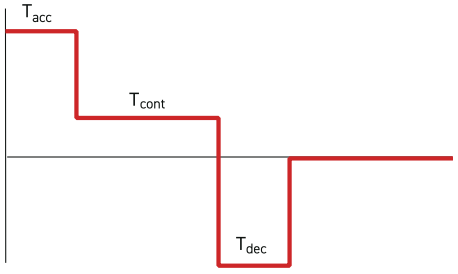

3. For Cycle mode applies

Determine Tacc % of (Tacc + Tcont + Tdec):
Tacc / (Tacc + Tcont + Tdec) x 100%

Define the ratio: Tcont / Tacc

Use the table to select the load factor K.

Compare Accel/Decel torque to the maximum permissible accel torque of the gearbox Tacc r: Tacc < Tacc r x K , if not, please select a more suitable gearbox.

Compare the required maximum speed to the maximum rated speed of the gearbox.

Nmax < Nmax r / i i-gearbox ratio)

Table: Load Factor K

T_{acc} %	$0 < T_{cont} / T_{acc} < 0.25$	$0.25 < T_{cont} / T_{acc} < 0.5$
10-15	1.0	1.0
15-20	1.0	0.95
20-25	0.94	0.89
25-30	0.88	0.84
30-35	0.81	0.79
35-40	0.76	0.75
40-45	0.71	0.70
45-50	0.66	0.66

4. For continuous operation applies

Tnom < Tnom r
Nnom < Nnom r / i

5. Check the Emergency Stop Torque Rating

6. Verify Radial and Axial Shaft Load of the Application for the selected Gearbox.

Tel: +45 63 12 83 00 | Email: ps@hymatik.com | www.hymatik.com | Hvidkaervej 27a, DK-5250 Odense SV, Denmark

Order Code PS Gearboxes

	1	2		3		4	5		6
Order example	**PS**	**60**	**-**	**003**	**-**	**S**	**2**	**/**	**MU60-088**

1	Gearbox type	
•	PS	Gearbox for in-line mounting
2		
•	60	Flange 60
•	90	Flange 90
•	115	Flange 115
	142	Flange 142
3	**Ratio**	
	003	3 •
	004	4
	005	5 •
	007	7
	010	10 •
	015	15
	020	20 •
	025	25
	030	30
	040	40
	050	50 •
	070	70
	100	100
4	**Reverse play / orientation**	
•	S	Standard
	L	Reduced
5	**Series**	
•	2	Gen 2 Gearboxes

6	Adapter flange / Motor assignment	
•	MU60-001	SMH60,###,##,5,11,S MH70,###,##,5,11,S NX3
•	MU60-003	MH56,###,##,5,9,S SMH60,###,##,8,9,S
	MU60-005	SY56
•	MU60-254	MH56,###,##,5,11,S NX2
•	MU60-255	NX1
•	MU60-321	SMH,###,###,8,14,S
•	MU90-001	SMH82,###,##,8,14,S
•	MU90-085	SMH82,###,##,8,19,S NX4
•	MU90-088	MH105,###,##,5,19,S SMH100,###,##,5,19,S
	MU90-345	SMH115,###,##,8,19,S
•	MU115-005	MH105,###,##,5,24,S SMH100,###,##,5,24,S
•	MU115-006	SMH115,###,##,8,19,S
•	MU115-010	MH105,###,##,6,24,S SMH115,###,##,7,24,S NX6
	MU115-015	SMH82,###,##,8,14,S
•	MU115-026	SMH115,###,##,5,24,S SMH142,###,##,5,24,S
•	MU115-039	SMH82,###,##,5,19,S SMH100,###,##,5,19,S
•	MU115-089	SMH82,###,##,8,19,S
	MU115-257	SMH115,###,##,8,24,S
•	MU115-269	MH105,###,##,9,24,S
	MU142-40410	SM_170,###,##,38,S
		MH205,###,##,38,S
	MUxxx-yyy	Additional motors

• On stock, short delivery times

PS gearboxes generally come with a keyway

Tel: +45 63 12 83 00 | Email: ps@hymatik.com | www.hymatik.com | Hvidkaervej 27a, DK-5250 Odense SV, Denmark

Tel: +45 63 12 83 00 | Email: ps@hymatik.com | www.hymatik.com | Hvidkaervej 27a, DK-5250 Odense SV, Denmark

Tel: +45 63 12 83 00 | Email: ps@hymatik.com | www.hymatik.com | Hvidkaervej 27a, DK-5250 Odense SV, Denmark

www.parker.com

192-753015UK Novembre 2025
© 2025 Parker Hannifin EMEA Sarl. All Rights Reserved.