

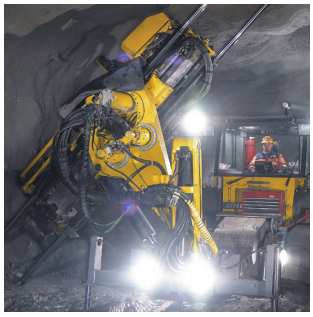

aerospace
climate control
electromechanical
filtration
fluid & gas handling
hydraulics
pneumatics
process control
sealing & shielding

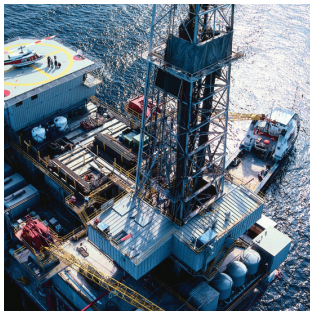

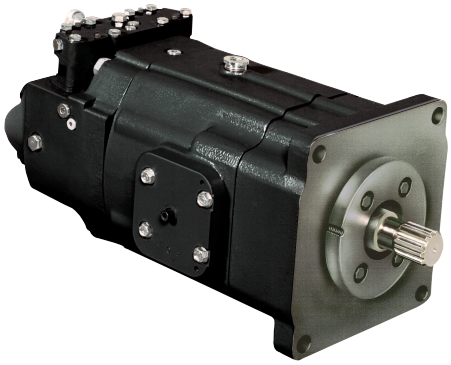

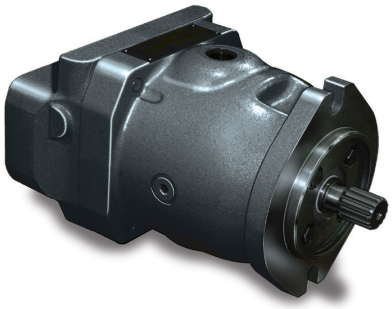

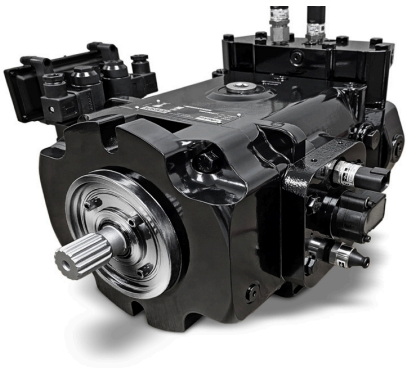

# Denison GOLD CUP® Product Catalog
# Piston Pumps & Motors

For Open & Closed Circuits

HY28-2667-01/GC/NA,EU
Effective: February 2022



Parker

ENGINEERING YOUR SUCCESS.

Tel: +45 63 12 83 00 | Email: ps@hymatik.com | www.hymatik.com | Hvidkaervej 27a, DK-5250 Odense SV, Denmark

HY28-2667-01/GC/NA,EU

**Hydraulic Pump Division and Denison Hydraulics**

# Hydrostatic Transmission Piston Pumps
## GOLD CUP® Series - Open & Closed Circuits

The Hydraulic Pump Division of Parker Hannifin was formed in 2004 when our significant piston pump business was expanded through the acquisition of Denison Hydraulics. The addition of Denison allowed us to marry the wealth of knowledge that both companies have in the design, manufacture, and application of piston products in both open circuit and closed circuit system applications. Since before WWII, Denison products have been chosen for Military test stand applications and for shipboard hydraulic applications being recognized as technology leaders.

The heavy duty GOLD CUP® series of pumps and motors in this catalog represent a broadening of our product offering with hydrostatic transmission applications in marine, drilling, and shredding applications, among others. The tried and true design of the GOLD CUP® product line incorporates features such as integral servo and replenishing pump, hot oil shuttle, and a unique servo control system; all of which combine to provide a rugged self contained package which can withstand the harshest of conditions and continue to perform with trouble free long life.

The division is a leading worldwide manufacturer of hydraulic components and systems for earthmoving and construction vehicles; for mining equipment; for pulp and paper, chemical and other processing equipment; for ships and ordnance equipment; and for such in-plant machines as machine tools, plastic molding, die casters, and stamping presses.

The product information, specifications, and descriptions contained in this publication have been compiled for the use and convenience of our customers from information furnished by the manufacturer; and we can not, and do not, accept any responsibility for the accuracy or correctness of any description, calculation, specification, or information contained herein. No such description, calculation, specification, or information regarding the products being sold has been made part of the basis of the bargain, nor has same created or amounted to an express warranty that the products would conform thereto. We are selling the goods and merchandise illustrated and described on this publication on an “as is” basis, and disclaim any implied warranty, including any warranty of merchantability or warranty of fitness for any particular purpose whatsoever, with respect to the goods and merchandise sold. All manufacturer warranties shall be passed on to our customers, but we shall not be responsible for special, indirect, incidental, or consequential damages resulting from the use of any of the products or information contained or described on this publication. Further, we reserve the right to revise or otherwise make product improvements at any time without notification.

### WARNING - USER RESPONSIBILITY

FAILURE OR IMPROPER SELECTION OR IMPROPER USE OF THE PRODUCTS DESCRIBED HEREIN OR RELATED ITEMS CAN CAUSE DEATH, PERSONAL INJURY AND PROPERTY DAMAGE.

This document and other information from Parker-Hannifin Corporation, its subsidiaries and authorized distributors provide product or system options for further investigation by users having technical expertise.

The user, through its own analysis and testing, is solely responsible for making the final selection of the system and components and assuring that all performance, endurance, maintenance, safety and warning requirements of the application are met. The user must analyze all aspects of the application, follow applicable industry standards, and follow the information concerning the product in the current product catalog and in any other materials provided from Parker or its subsidiaries or authorized distributors.

To the extent that Parker or its subsidiaries or authorized distributors provide component or system options based upon data or specifications provided by the user, the user is

### OFFER OF SALE

The items described in this document are hereby offered for sale by Parker-Hannifin Corporation, its subsidiaries or its authorized distributor. This offer and its acceptance are governed by the provisions stated in the detailed "Offer of Sale" elsewhere in this document.

© Copyright 2020, Parker Hannifin Corporation. All Rights Reserved.

Mining Photo on Front Cover is the Property of Atlas Copco.

**Parker Hannifin Corporation**
Hydraulic Pump and Power Systems Division
United States

# Contents

**Contents** ..... 1

**Technical Data** ..... 2

**Features** ..... 5

**Description** ..... 6

**Pump, Motor Dimensions**

P6, 7, 8 ..... 9
M6, 7, 8 ..... 13
P11, 14 ..... 16
M11, 14 ..... 20
P24, 30 ..... 23
M24, 30 ..... 28

**Controls Dimensions**

10, 2A ..... 33, 40
2H, 4A ..... 34
7D, 7J ..... 35
7F, 7K ..... 36
7Q, 7R ..... 37
8A, 8C ..... 38, 41
9A, 9C ..... 39, 41
**4 ..... 42
**6, **8, **2 ..... 43
**9 ..... 44

**Rear Adapters**

P6, 7, 8 ..... 45-47
P11, 14 ..... 45, 48-50
P24, 30 ..... 45,51-54

**Inlet Conditions** ..... 55

**Performance Curves** ..... 56-61

**Pump Primary Displacement Control Options** ..... 62-69

**Secondary Control Options** ..... 70-71

**Hydraulic Schematics** ..... 72-76

**GOLD CUP® Pump Control Combinations** ..... 77

**Pump Ordering Code** ..... 78-79

**GOLD CUP® Motor Control Combinations** ..... 81

**Motor Ordering Code** ..... 82-83

**Offer of Sale** ..... 84

**Revisions** ..... 85



Tel: +45 63 12 83 00 | Email: ps@hymatik.com | www.hymatik.com | Hvidkaervej 27a, DK-5250 Odense SV, Denmark

| Series | | Terms | P6 | P7 | P8 | P11 | P14 | P24 | P30 |
|---|---|---|---|---|---|---|---|---|---|
| **Displacement** | *Max. displacement* | $in^3$/rev. | 6.00 | 7.25 | 8.00 | 11.00 | 14.00 | 24.60 | 30.60 |
| | | $cm^3$/rev. | 98,3 | 118,8 | 131,1 | 180,3 | 229,5 | 403,2 | 501,5 |
| **Pressure** | *Continuous* | psi | 5000 | 5000 | 5000 | 5000 | 5000 | 5000[1)] | 5000[1)] |
| | | bar | 350 | 350 | 350 | 350 | 350 | 350[1)] | 350[1)] |
| | *Intermittent* | psi | 6000[7)] | 6000[7)] | 5000 | 6000[7)] | 6000[7)] | 5500[1)7)] | 5500[1)7)] |
| | | bar | 420[7)] | 420[7)] | 350 | 420[7)] | 420[7)] | 370[1)7)] | 370[1)7)] |
| **Speed (***Pump)* | *max. @ full stroke* | rpm | 3000 | 3000 | 2700 | 2400 | 2400 | 2100[2)] | 1800 |
| *(Motor )* | *max. @ full stroke* | rpm | 3000 | 3000 | 2700 | 2400 | 2400 | 2100[2)] | 1800 |
| *(Motor )* | *max. @ 50% stroke* | rpm | 3600 | 3600 | 3000 | 2800 | 2800 | 2100[2)] | 1800 |
| **Mounting** | *Flange -2 bolt* | SAE | 127-2 (C) | 127-2 (C) | 127-2 (C) | - | - | - | - |
| *Flange -4 bolt (opt. on 6,7 & 8)* | | SAE | 152-4 (D) | 152-4 (D) | 152-4 (D) | 165-4 (E) | 165-4 (E) | 177-4 (F) | 177-4 (F) |
| | *Shaft - keyed* | SAE | 32-1 (C) | 32-1 (C) | 32-1 (C) | 44-1 (E) | 44-1 (E) | 50-1 (F) | 50-1 (F) |
| | *keyed* | SAE | 44-1 (D) | 44-1 (D) | 44-1 (D) | - | - | - | - |
| | *Shaft - splined* | SAE | 32-4 (C) | 32-4 (C) | 32-4 (C) | 44-4 (E) | 44-4 (E) | 50-4(F) | 50-4 (F) |
| | *splined* | SAE | 44-4 (D) | 44-4 (D) | 44-4 (D) | - | - | - | - |
| **Weight** *(Pump) less controls* | | lbs | 175-300 | 175-300 | 175-300 | 325-530 | 325-530 | 750-835 | 750-835 |
| | *Mass* | kg. | 80-135 | 80-135 | 80-135 | 145-240 | 145-240 | 340-375 | 340-375 |
| **Weight** *(Motor Fixed)* | | lbs | 110 | 110 | 110 | 250 | 250 | 510 | 600 |
| | *Mass* | kg. | 50 | 50 | 50 | 110 | 110 | 230 | 270 |
| **Weight** *( Motor Variable) less controls* | | lbs | 110 | 110 | 110 | 300 | 300 | 650 | 670 |
| | *Mass* | kg. | 50 | 50 | 50 | 135 | 135 | 290 | 300 |
| **Rotating inertia** | | $lbs\text{-}in^2$ | 92 | 92 | 92 | 290 | 290 | 821 | 977 |
| | | $kg.m^2$ | 0,027 | 0,027 | 0,027 | 0,085 | 0,085 | 0,240 | 0,286 |
| **Torque** *(Motor) theo. max.* | *per 100 psi* | lbs-in | 95.5 | 115.4 | 127 | 175 | 222 | 392 | 487 |
| | *per 100 bar* | Nm | 157 | 189 | 208 | 287 | 362 | 623 | 797 |
| | *at 5000 psi* | lbs-in | 4774 | 5769 | 6366 | 8750 | 11100 | 19576 | 24351 |
| | *at 350 bar* | Nm | 539,5 | 651,9 | 717 | 990 | 1250 | 2158 | 2752 |
| **Power** *(Motor) theo. max.at 5000 psi, 350 bar* | | | | | | | | | |
| | *per 100 rpm* | hp | 7.6 | 9.2 | 10 | 13.8 | 17.6 | 31.1 | 38.6 |
| | | kW | 5,7 | 6,8 | 7,5 | 10,3 | 13,1 | 23,1 | 28,8 |
| | *at 2000 rpm* | hp | 151.5 | 183.1 | 201,5 | 277.8 | 353.5 | 621.3 | 695 |
| | | kW | 113,0 | 136,6 | 152 | 207,0 | 263,7 | 463,5 | 518,2 |
| **Torque** *(Motor) efficiency* | *- approx. stalled* | % theo. | 81 | 81 | 81 | 81 | 81 | 81 | 81 |
| | *running* | % theo. | 93 | 93 | 93 | 93 | 93 | 93 | 93 |
| **Case pressure:** | *max. allowable continuous* | psi | 75 | 75 | 75 | 75 | 75 | 75 | 75 |
| | | bar | 5,2 | 5,2 | 5,2 | 5,2 | 5,2 | 5,2 | 5,2 |
| | *intermittent* | psi | 125 | 125 | 125 | 125 | 125 | 125 | 125 |
| | | bar | 8,6 | 8,6 | 8,6 | 8,6 | 8,6 | 8,6 | 8,6 |
| *(Not to exceed 25 psi,1,7 bar above inlet in open circuit units)* | | | | | | | | | |
| **Flow** *(Pump) theo.at max.displ.@1500 rpm* | | gpm | 39 | 47 | 52 | 71 | 91 | 160 | 199 |
| | | lpm | 148 | 178 | 197 | 269 | 344 | 606 | 753 |
| | *@1800 rpm* | gpm | 47 | 57 | 62 | 86 | 109 | 192 | 238 |
| | | lpm | 178 | 216 | 235 | 326 | 413 | 727 | 901 |
| **Displacement** | *(Internal aux. pump)* | | **P6,7,8P,S,V** | **P11,14P,S** | **P11,14V** | **P24P** | **P24S[3)]** | **P30P** | **P30S[3)]** |
| | | $in^3$/rev. | 1.07 | (2) 1.07[4)] | 1.07[5)] | 2.81[6)] | 2.81[6)] | 2.81[6)] | 2.81[6)] |
| | | $cm^3$/rev. | 17,5 | (2) 17,5 | 17,5 | 46,1 | 46,1 | 46,1 | 46,1 |
| **Flow** *(Internal aux. pump)* | *@1500 rpm* | gpm | 6.9 | (2) 6.9 | 6.9 | 18.2 | 6.5 | 18.2 | 6.5 |
| | | lpm | 26,1 | (2) 26,1 | 26,1 | 68,9 | 24,6 | 69,1 | 24,6 |
| | *@1800 rpm* | gpm | 8.3 | (2) 8.3 | 8.3 | 21.9 | 7.8 | 21.9 | 7.8 |
| | | lpm | 31,4 | (2) 31,4 | 31,4 | 82,9 | 29,5 | 82,9 | 29,5 |

1) Max. pressure 5000 psi, (350 bar) for M24 and 30 series variable motors. Higher servo pressure may be required - consult Parker.

2) On HF-1 fluids, 1800 RPM Max. on HF-0 fluids.

3) Internal cartridge provides servo flow and must be supercharged from external replenishing flow, from external auxiliary pump.

4) One servo cartridge and one replenishing cartridge.

5) Servo cartridge only.

6) Standard, other sizes available, see ordering code.

7) 10% of operation time, not exceeding 6 successive seconds.



Tel: +45 63 12 83 00 | Email: ps@hymatik.com | www.hymatik.com | Hvidkaervej 27a, DK-5250 Odense SV, Denmark

| | | | | | |
|---|---|---|---|---|---|
| **Replenishing pressure** *(Internal aux. pump)* | | **P6,7,8,11,14,24P** | **P6,7,8,11,14,24S** | **P30P** | **P30S** |
| *Replenish pressure minus case pressure* | psi | 180-220 | *180-220 | 180-220 | *180-220 |
| | bar | 12,4-15,2 | 12,4-15,2 | 12,4-15,2 | 12,4-15,2 |
| **Servo pressure** *(Internal aux. pump)* | psi | 308-420 | 308-420 | 308-420 | 308-420 |
| *Servo pressure minus case pressure* | bar | 21,2-29,0 | 21,2-29,0 | 21,2-29,0 | 21,2-29,0 |
| *at 0 psi, 0 bar discharge pressure* | | | | | |
| **Servo pressure** *(Internal aux. pump)* (Above repl.) | psi | 500-650 | 500-650 | 500-650 | 500-650 |
| *for HI-IQ control units. Servo pressure minus* | bar | 34,5-44,8 | 34,5-44,8 | 34,5-44,8 | 34,5-44,8 |
| *case pressure at 5000 psi, 350 bar discharge pressure - at system pressure range 0 to 5000 psi, 350 bar.* | | | | | |

*Note: Nominal setting, may be increased if required.

| **Series** | | **Terms** | **P6** | **P7** | **P8** | **P11** | **P14** | **P24** | **P30** |
|---|---|---|---|---|---|---|---|---|---|
| **Controls** | | | | | | | | | |
| Compensator response | off-stroke | sec. | 0.05 | 0.05 | 0.05 | 0.07 | 0.07 | 0.10 | 0.10 |
| (per SAE J497 @ **5000 psi**, 350 bar) | on-stroke | sec. | 0.9 | 0.9 | 0.9 | 1.5 | 1.5 | 1.8 | 1.8 |
| Compensator adjustment | | **psi/turn** | **2000** | **2000** | **2000** | **2000** | **2000** | **2000** | **2000** |
| | | bar/turn | 138 | 138 | 138 | 138 | 138 | 138 | 138 |
| Torque to turn rotary servo shaft | | **in.-lbs** | **20** | **20** | **20** | **20** | **20** | **20** | **20** |
| | | Nm | 2,3 | 2,3 | 2,3 | 2,3 | 2,3 | 2,3 | 2,3 |

The maximum inlet at the auxiliary pump inlet is 200 psi. (13,8 bar)

Minimum compensating pressure will always be 100-200 psi. (6,9-13,8 bar) over servo pressure.

Any inlet pressures above atmospheric will increase noise levels and decrease efficiencies noted in this literature. Exact measurements depend on each application and operating conditions. Please consult your nearest Parker Office for further details.

*Standard factory compensating pressure is 1,000 psi. (69,0 bar).



Tel: +45 63 12 83 00 | Email: ps@hymatik.com | www.hymatik.com | Hvidkaervej 27a, DK-5250 Odense SV, Denmark

## REAR DRIVE TORQUE CAPACITY

| SERIES | FRONT INPUT SHAFT | | REAR MOUNTINGS SAE | | | | | | REAR OUTPUT SHAFT |
|---|---|---|---|---|---|---|---|---|---|
| | TYPE | TORQUE CAPACITY | A | B | C | D | E | F | TORQUE CAPACITY |
| P6,7,8 | P, V, F, D | 6920 in-lbs (780 Nm) | | | | | | | N/A |
| M6,7,8 | F, G, V, H | 6920 in-lbs (780 Nm) | | | | | | | N/A |
| P6,7,8 | S, X | 6920 in-lbs (780 Nm) | ● | ● | | | | | 1750 in-lbs (195 Nm) |
| P6,7,8 | M, R, L | 13845 in-lbs (1565 Nm) | ● | ● | ● | | | | 6920 in-lbs (780 Nm) |
| M6,7,8 | M, N, R, L | 13845 in-lbs (1565 Nm) | ● | ● | ● | | | | 6920 in-lbs (780 Nm) |
| P11,14 | P, V, F | 13370 in-lbs (1510 Nm) | | | | | | | N/A |
| M11,14 | F, G, V, H | 13370 in-lbs (1510 Nm) | | | | | | | N/A |
| P11,14 | S, X | 13370 in-lbs (1510 Nm) | ● | ● | ● | | | | 2400 in-lbs (270 Nm) |
| P11,14 | M, R, L | 26735 in-lbs (3020 Nm) | ● | ● | ● | ● | ● | | 13370 in-lbs (1510 Nm) |
| M11,14 | M, N, R, L | 26735 in-lbs (3020 Nm) | ● | ● | ● | ● | ● | | 13370 in-lbs (1510 Nm) |
| P24,30 | P, F | 24350 in-lbs (2750 Nm) | | | | | | | N/A |
| M24,30 | F, G, V, H | 24350 in-lbs (2750 Nm) | | | | | | | N/A |
| P24,30 | S, X | 24350 in-lbs (2750 Nm) | | ● | ● | | | | 2700 in-lbs (305 Nm) |
| P24,30 | M, R, L | 48700 in-lbs (5500 Nm) | | ● | ● | ● | ● | ● | 24350 in-lbs (2750 Nm) |
| M24,30 | M, N, R, L | 48700 in-lbs (5500 Nm) | | ● | ● | ● | ● | ● | 24350 in-lbs (2750 Nm) |

Notes: Torque valves above cover shaft options 2, 3, 4, 5, 7, 8, 9, and 10; Coupling for keyed shaft must be pressed fit for full torque capability.

**P6/7/8 SAE 127-2 Mtg., 32-1, 4 Shaft Bearing 230-82140 (6007)**

| Speed (rpm) | 1000 | 1000 | 1000 | 1000 | 1200 | 1200 | 1200 | 1200 | 1500 | 1500 | 1500 | 1500 | 1800 | 1800 | 1800 | 1800 |
|---|---|---|---|---|---|---|---|---|---|---|---|---|---|---|---|---|
| Shaft Load (lbs) * | 0 | 0 | 1000 | 1000 | 0 | 0 | 1000 | 1000 | 0 | 0 | 1000 | 1000 | 0 | 0 | 1000 | 1000 |
| Shaft Load (N) * | 0 | 0 | 4448 | 4448 | 0 | 0 | 4448 | 4448 | 0 | 0 | 4448 | 4448 | 0 | 0 | 4448 | 4448 |
| Case Pressure (psi) | 0 | 25 | 0 | 25 | 0 | 25 | 0 | 25 | 0 | 25 | 0 | 25 | 0 | 25 | 0 | 25 |
| Case Pressure (bar) | 0.0 | 1.7 | 0.0 | 1.7 | 0.0 | 1.7 | 0.0 | 1.7 | 0.0 | 1.7 | 0.0 | 1.7 | 0.0 | 1.7 | 0.0 | 1.7 |
| **B-10 Life (hours x 1000)** | **8E+08** | **1833** | **0.778** | **0.778** | **6E+08** | **1528** | **0.648** | **0.648** | **5E+08** | **1222** | **0.518** | **0.518** | **4E+08** | **1018** | **0.432** | **0.432** |

**P6/7/8 SAE 152-4 Mtg., 44-1, 4 Shaft Bearing 230-00207-0 (6207)**

| Speed (rpm) | 1000 | 1000 | 1000 | 1000 | 1200 | 1200 | 1200 | 1200 | 1500 | 1500 | 1500 | 1500 | 1800 | 1800 | 1800 | 1800 |
|---|---|---|---|---|---|---|---|---|---|---|---|---|---|---|---|---|
| Shaft Load (lbs) * | 0 | 0 | 1000 | 1000 | 0 | 0 | 1000 | 1000 | 0 | 0 | 1000 | 1000 | 0 | 0 | 1000 | 1000 |
| Shaft Load (N) * | 0 | 0 | 4448 | 4448 | 0 | 0 | 4448 | 4448 | 0 | 0 | 4448 | 4448 | 0 | 0 | 4448 | 4448 |
| Case Pressure (psi) | 0 | 25 | 0 | 25 | 0 | 25 | 0 | 25 | 0 | 25 | 0 | 25 | 0 | 25 | 0 | 25 |
| Case Pressure (bar) | 0.0 | 1.7 | 0.0 | 1.7 | 0.0 | 1.7 | 0.0 | 1.7 | 0.0 | 1.7 | 0.0 | 1.7 | 0.0 | 1.7 | 0.0 | 1.7 |
| **B-10 Life (hours x 1000)** | **3E+09** | **7394** | **3.136** | **3.136** | **3E+09** | **6161** | **2.613** | **2.613** | **2E+09** | **4929** | **2.09** | **2.09** | **2E+09** | **4170** | **1.742** | **1.742** |

**P11/14 SAE 165-4 Mtg., 44-1, 4 Radial Shaft Bearing 230-82148-0 (6010) (2 & 3 Shaft Codes)**

| Speed (rpm) | 1000 | 1000 | 1000 | 1000 | 1200 | 1200 | 1200 | 1200 | 1500 | 1500 | 1500 | 1500 | 1800 | 1800 | 1800 | 1800 |
|---|---|---|---|---|---|---|---|---|---|---|---|---|---|---|---|---|
| Shaft Load (lbs) * | 0 | 0 | 1000 | 1000 | 0 | 0 | 1000 | 1000 | 0 | 0 | 1000 | 1000 | 0 | 0 | 1000 | 1000 |
| Shaft Load (N) * | 0 | 0 | 4448 | 4448 | 0 | 0 | 4448 | 4448 | 0 | 0 | 4448 | 4448 | 0 | 0 | 4448 | 4448 |
| Case Pressure (psi) | 0 | 25 | 0 | 25 | 0 | 25 | 0 | 25 | 0 | 25 | 0 | 25 | 0 | 25 | 0 | 25 |
| Case Pressure (bar) | 0.0 | 1.7 | 0.0 | 1.7 | 0.0 | 1.7 | 0.0 | 1.7 | 0.0 | 1.7 | 0.0 | 1.7 | 0.0 | 1.7 | 0.0 | 1.7 |
| **B-10 Life (hours x 1000)** | **2E+09** | **535** | **1.907** | **1.907** | **2E+09** | **446** | **1.589** | **1.589** | **1E+09** | **356** | **1.272** | **1.272** | **1E+09** | **297** | **1.06** | **1.06** |

**P11/14 SAE 165-4 Mtg., 44-1, 4 Spherical Roller Shaft Bearing 230-82214-0 (22208) (7 & 8 Shaft Codes)**

| Speed (rpm) | 1000 | 1000 | 1000 | 1000 | 1200 | 1200 | 1200 | 1200 | 1500 | 1500 | 1500 | 1500 | 1800 | 1800 | 1800 | 1800 |
|---|---|---|---|---|---|---|---|---|---|---|---|---|---|---|---|---|
| Shaft Load (lbs) * | 0 | 0 | 1000 | 1000 | 0 | 0 | 1000 | 1000 | 0 | 0 | 1000 | 1000 | 0 | 0 | 1000 | 1000 |
| Shaft Load (N) * | 0 | 0 | 4448 | 4448 | 0 | 0 | 4448 | 4448 | 0 | 0 | 4448 | 4448 | 0 | 0 | 4448 | 4448 |
| Case Pressure (psi) | 0 | 25 | 0 | 25 | 0 | 25 | 0 | 25 | 0 | 25 | 0 | 25 | 0 | 25 | 0 | 25 |
| Case Pressure (bar) | 0.0 | 1.7 | 0.0 | 1.7 | 0.0 | 1.7 | 0.0 | 1.7 | 0.0 | 1.7 | 0.0 | 1.7 | 0.0 | 1.7 | 0.0 | 1.7 |
| **B-10 Life (hours x 1000)** | **16856** | **2452** | **275** | **172** | **14046** | **2043** | **230** | **143** | **11237** | **1635** | **184** | **114.8** | **9364** | **1363** | **153** | **95.7** |

**P24 SAE 177-4 Mtg., 50-1, 4 Shaft Bearing 230-82213-0 (22311)**

| Speed (rpm) | 1000 | 1000 | 1000 | 1000 | 1200 | 1200 | 1200 | 1200 | 1500 | 1500 | 1500 | 1500 | 1800 | 1800 | 1800 | 1800 |
|---|---|---|---|---|---|---|---|---|---|---|---|---|---|---|---|---|
| Shaft Load (lbs) * | 0 | 0 | 1000 | 1000 | 0 | 0 | 1000 | 1000 | 0 | 0 | 1000 | 1000 | 0 | 0 | 1000 | 1000 |
| Shaft Load (N) * | 0 | 0 | 4448 | 4448 | 0 | 0 | 4448 | 4448 | 0 | 0 | 4448 | 4448 | 0 | 0 | 4448 | 4448 |
| Case Pressure (psi) | 0 | 25 | 0 | 25 | 0 | 25 | 0 | 25 | 0 | 25 | 0 | 25 | 0 | 25 | 0 | 25 |
| Case Pressure (bar) | 0.0 | 1.7 | 0.0 | 1.7 | 0.0 | 1.7 | 0.0 | 1.7 | 0.0 | 1.7 | 0.0 | 1.7 | 0.0 | 1.7 | 0.0 | 1.7 |
| **B-10 Life (hours x 1000)** | **591.6** | **428.5** | **276.7** | **213.5** | **493** | **357** | **230.5** | **178** | **394.4** | **991.6** | **184.4** | **142.3** | **328.7** | **238** | **153.7** | **118.6** |

**P30 SAE 177-4 Mtg., 50-1, 4 Shaft Bearing 230-82213-0 (22311)**

| Speed (rpm) | 1000 | 1000 | 1000 | 1000 | 1200 | 1200 | 1200 | 1200 | 1500 | 1500 | 1500 | 1500 | 1800 | 1800 | 1800 | 1800 |
|---|---|---|---|---|---|---|---|---|---|---|---|---|---|---|---|---|
| Shaft Load (lbs) * | 0 | 0 | 1000 | 1000 | 0 | 0 | 1000 | 1000 | 0 | 0 | 1000 | 1000 | 0 | 0 | 1000 | 1000 |
| Shaft Load (N) * | 0 | 0 | 4448 | 4448 | 0 | 0 | 4448 | 4448 | 0 | 0 | 4448 | 4448 | 0 | 0 | 4448 | 4448 |
| Case Pressure (psi) | 0 | 25 | 0 | 25 | 0 | 25 | 0 | 25 | 0 | 25 | 0 | 25 | 0 | 25 | 0 | 25 |
| Case Pressure (bar) | 0.0 | 1.7 | 0.0 | 1.7 | 0.0 | 1.7 | 0.0 | 1.7 | 0.0 | 1.7 | 0.0 | 1.7 | 0.0 | 1.7 | 0.0 | 1.7 |
| **B-10 Life (hours x 1000)** | **227** | **177.7** | **126.4** | **102.8** | **189.2** | **148** | **105.3** | **85.6** | **151.3** | **118.4** | **84.2** | **68.5** | **126.1** | **98.7** | **70.2** | **57.1** |

*radial load at center of key or spline

Note: Variation in life is due to variations in tolerances within the pump.
Contact Parker Hydraulics for B-10 with other operating conditions and with other case pressure values.
Consult Parker Hydraulics for shaft side loads of P*R units.

1. Quick change valve block - easy to service or replace
2. Quick change controls - easy to service and change
3. Dampened low inertia rocker cam - more stable, quieter and faster than other designs
4. Exclusive zero-backlash rotary servo design - lifetime accuracy
5. Field adjustable compensator override - easily adjusted without removing from machinery
6. Precision barrel bearing, a distinctive Denison Hydraulics feature for over 30 years - permits high speeds, high pressure and provides long life
7. Versatile controls - can be located on either side of pump or motor for maximum freedom of design
8. Ring style replenishing checks fastest operation with no sliding poppets or parts and low pressure drop
9. Hot oil shuttle available - fast, reliable operation
10. Auxiliary pump can be changed without disassembling the transmission
11. Standard SAE keyed or splined drive shafts are available
12. High pressure mechanical shaft seals can be changed without disassembling the transmission. Double lip seals are also available
13. One piece stroking vane/cam means no lost motion, zero backlash, better control, and no linkages to wear out
14. Stroking vane seals are pressure loaded for longer life
15. Standard compensator vent ports allow for a wide variety of controls (See Applications Manual)
16. Rocker cam displacement indicator helps troubleshoot the system
17. Modulated servo pressure saves power
18. Standard Code 62 SAE split flange connections
19. Conforms to SAE mounting standards.
20. Fast compensator response. See page 5
21. Variable motors available for multiple speed ranges or constant power

Note:
1. These products, with exception of 8 cubic inch units, are qualified to meet Military specifications MIL-P-17869A and MIL-S-901-C Grade A.
2. All GOLD CUP® Pumps and Motors* have ATEX approval. *See ordering code for availability.
3. Consult factory for other approvals such as ABS and Lloyd's Registry.

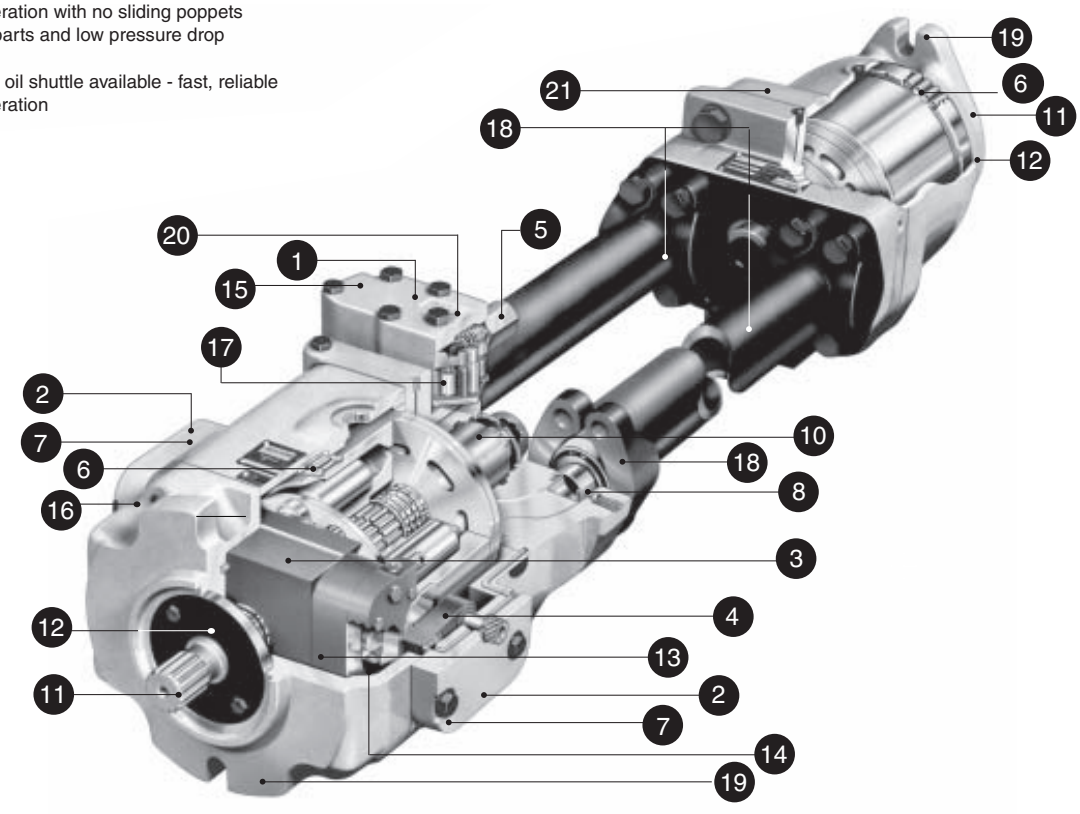




Tel: +45 63 12 83 00 | Email: ps@hymatik.com | www.hymatik.com | Hvidkaervej 27a, DK-5250 Odense SV, Denmark

**CLOSED HYDRAULIC CIRCUIT**

Variable Pump/Fixed Motor. This combination provides for a constant torque output at a fixed maximum pressure over the full speed range. Speed and direction are controlled with a variable displacement over-center pump. Power from overhauling loads is regenerated back into the pump prime mover. Motor speed is limited to the maximum speed permitted by full pump displacement. System is capable of full power only at maximum pump displacement.

**POWER CHARACTERISTICS OF HYDROSTATIC TRANSMISSIONS**

Variable Pump/Variable Motor. This combination provides for an extended range of motor speeds. The motor, at full displacement, delivers maximum torque while its speed and direction respond to displacement changes of the crossover center pump. Power is proportional to motor speed.

This transmission system has the capability of constant torque and rising power until the pump reaches full displacement and full power at elevated speeds as motor displacement and torque are reduced.

**PACKAGE PUMP**

The package pump contains the circuit elements shown in the hydraulic schematic on pgs. 72-74. These include the axial piston over-center variable displacement pump 2hich controls the speed and direction of the motor, the auxiliary pump which supplies servo pressure (for controlling the displacement of the variable pump) and replenishment pressure, the servo pressure relief valve, the replenishment pressure relief valve and the replenishment check valves for ports A and B. The pump package also includes the displacement control valves as well as an external arm which shows actual displacement. The various control features are described below.

**PACKAGE MOTOR**

The package motor, shown in schematic pgs. 72-74, contains the axial piston fluid motor, the shuttle valve that continuously removes hot oil from the low pressure side of the loop and a relief valve to establish minimum hydraulic loop pressure at the motor. The fluid motor is available with fixed displacement or with the variable displacement option. The standard variable motors include an external indicator which shows displacement.

**OPEN CIRCUIT PUMP**

The open circuit pump contains the circuit elements shown on pgs. 75,76. These include a cross-center variable displacement pump which is normally limited to one side of center. The auxiliary pump supplies only servo pressure to control the main pump displacement and inlet porting is enlarged to improve the pump's inlet characteristics. As the open loop pump operates on one side of center only, not all controls are available.

**AUXILIARY REAR DRIVE**

Additional auxiliary flow is available with the rear drive pump option. The rear drive may also be utilized for servo and other purposes. See ordering code for additional detail.

"R" & "L" style pumps have no rear shaft seal, so any pump driven must be able to withstand case pressure of the pump driving it.

**AUXILIARY PUMP**

Integral to the package pump's envelope is the gerotor auxiliary pump. (P24P, P24S, P30P & P30S have vane integral pump). It provides servo and replenishing pressure. See page 3 for factory settings.
NOTE: Auxiliary pump inlet must be connected directly to the reservoir. Customer must supply external line from integral auxiliary pump back into main pump for filtering servo and/or replenishing oil.
(see installation drawings starting on pg. 9)



Tel: +45 63 12 83 00 | Email: ps@hymatik.com | www.hymatik.com | Hvidkaervej 27a, DK-5250 Odense SV, Denmark

**MOUNTING**

The pump or motor is designed to operate in any position. For vertical mounting it is recommended that the shaft bearing be drained via the drain port provided.

The pump shaft must be in alignment with the shaft of the source driver and should be checked. The mating pilot bore and coupling must be concentric. This concentricity is particularly important if the shaft is rigidly connected to the driven load without a flexible coupling.

**Splined:** The shafts will accept a maximum misalignment of 0.15 mm (0.006 in.) total indicator reading. Angular misalignment at the external and internal spline axis must be less than ± 0.002 mm per millimeter of shaft radius (± 0.002 in. per inch of shaft radius.) The coupling interface must be lubricated. PARKER recommends lithium molydisulfide or similar grease.

The internal coupling should be hardened to Rc 27-34 and must conform to SAE-J498c, class 5 flat root side fit.

Additional misalignment must be accommodated by the use of a flexible coupling. Please consult coupling manufacturer's guidelines for proper application.

**Keyed:** High-strength heat-treated keys must be used. Replacement keys must be hardened to 27-34 Rc. The key corners must be chamfered .075 – 1 mm (.030 in. – .040 in.) at 450 to clear radii that exist in the keyway. If a flexible coupling is not used, the alignment of keyed shafts must be within tolerances given for splined shafts.

**INLET PRESSURES, PORTS A & B**

In a closed hydraulic loop the pump inlet or the fluid motor inlet (during dynamic braking) are supercharged by the integral replenishment system. Consult Parker in cases where fluid viscosity or dynamics or line size may cause inlet pressure at either port A or B to be less than the 150 psi, 10,3 bar maintained by the integral replenishment system. For operation in open loop or combination open-closed loops, consult Parker.

**DRAIN PORT**

Drain the package pump from the higher drain port. If drain port is above the fluid level in the tank install a 5 psi, 0,3 bar relief of suitable size in the drain line to tank. For vertical mounting it is recommended that the shaft bearing be drained via the drain port provided.

For pump speeds intermittently below 1000 rpm, install a back pressure relief 40 psi, 2,8 bar of suitable size in the drain line from the higher port to tank. Motor case drain must be connected to pump case.

Motor: Drain the motor from the higher drain ports into the lower pump drain port or tank. Make provision that the motor drain port pressure will not exceed the maximum limits specified above.

**RETURN LINE FILTER**

Relatively inexpensive low pressure filters are recommended for installation in the return lines and drain lines from circuits using these pumps or motors. Consider the possibility of decompression surges and intensified flow in cylinder circuits as well as the factors above in selecting return line filters.



Tel: +45 63 12 83 00 | Email: ps@hymatik.com | www.hymatik.com | Hvidkaervej 27a, DK-5250 Odense SV, Denmark

**AUXILIARY FLOW FILTERS**

It is recommended the auxiliary pump fluid be filtered to aid in maintaining acceptable cleanliness levels. For good filtration and reasonable maintenance intervals the filter capacity must be at least twice the auxiliary pump flow. To use this feature, install the isolation plug and connect the filter between ports G&H, (P6,P7,P8,P24,P30), or J&K (P11,P14). See detailed schematics and drawings pages 9-30 for location of these ports.

**RECOMMENDED FLUIDS**

The fluid recommended for use in these pumps and motors has a petroleum base and contains agents which provide oxidation inhibition and anti-rust, antifoam and de-areating properties as described in Parker Denison standard HF-1. These preferred fluids do not contain anti-wear additives. Fluids containing anti-wear additives that meet Parker Denison standard HF-0 are acceptable.

**VISCOSITY**

| | |
|---|---|
| Max. at cold start | 7500 SUS, 1600 cSt |
| at low pressure, low flow and if possible, low speed | |
| Max. at full power | 750 SUS, 160 cSt |
| Optimum for max. life | 140 SUS, 30 cSt |
| Minimum at full power | 60 SUS, 10cSt |

**CLEANLINESS**

Particle contamination to meet ISO 20/17/14 or better. Water content < 500 ppm for mineral based fluids. For detail on fluid recommendations see bulletin SPO-AM305.



Tel: +45 63 12 83 00 | Email: ps@hymatik.com | www.hymatik.com | Hvidkaervej 27a, DK-5250 Odense SV, Denmark

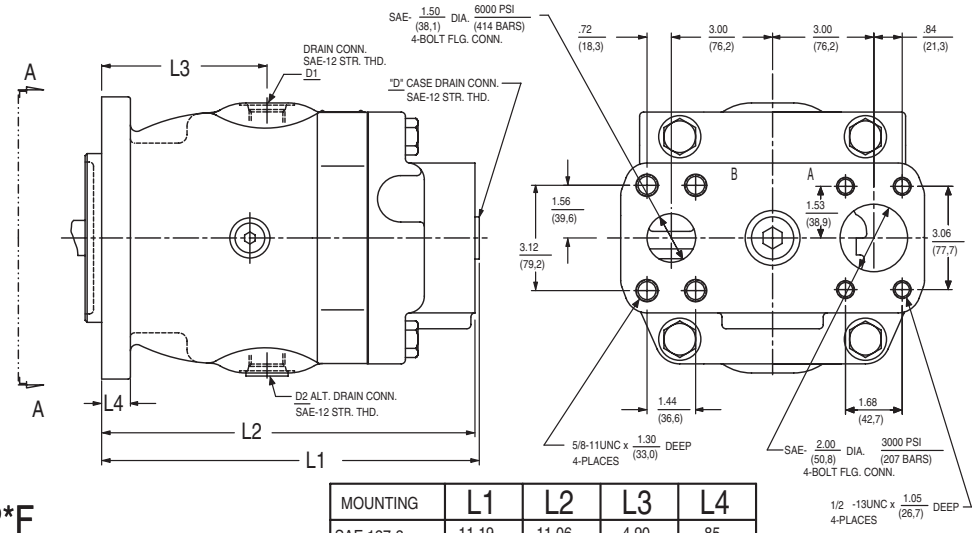


## P*F

| MOUNTING | L1 | L2 | L3 | L4 |
|---|---|---|---|---|
| SAE 127-2 (SAE-C) | 11.19 (284,2) | 11.06 (280,9) | 4.90 (124,5) | .85 (21,6) |
| SAE 152-4 (SAE-D) | 11.59 (294,3) | 11.46 (291,1) | 5.30 (134,6) | .89 (22,6) |

## P*M

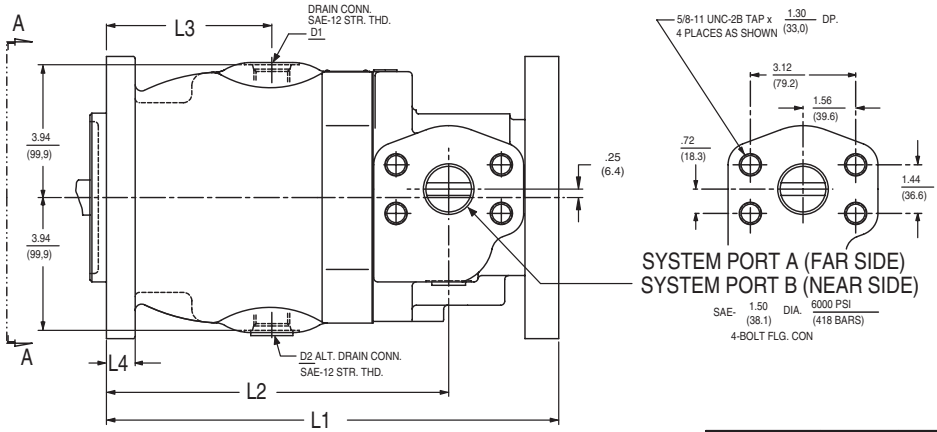


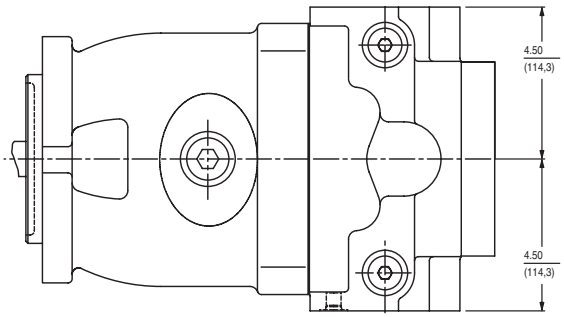


| MOUNTING | L1 | L2 | L3 | L4 |
|---|---|---|---|---|
| SAE 127-2 (SAE-C) | 13.40 (340,4) | 10.14 (257,6) | 4.90 (124,5) | .85 (21,6) |
| SAE 152-4 (SAE-D) | 13.80 (350,5) | 10.54 (267,7) | 5.30 (134,6) | .89 (22,6) |

NOTE: See page 15 for shaft information.
See pages 45-54 for rear drive information



Tel: +45 63 12 83 00 | Email: ps@hymatik.com | www.hymatik.com | Hvidkaervej 27a, DK-5250 Odense SV, Denmark

## P*V

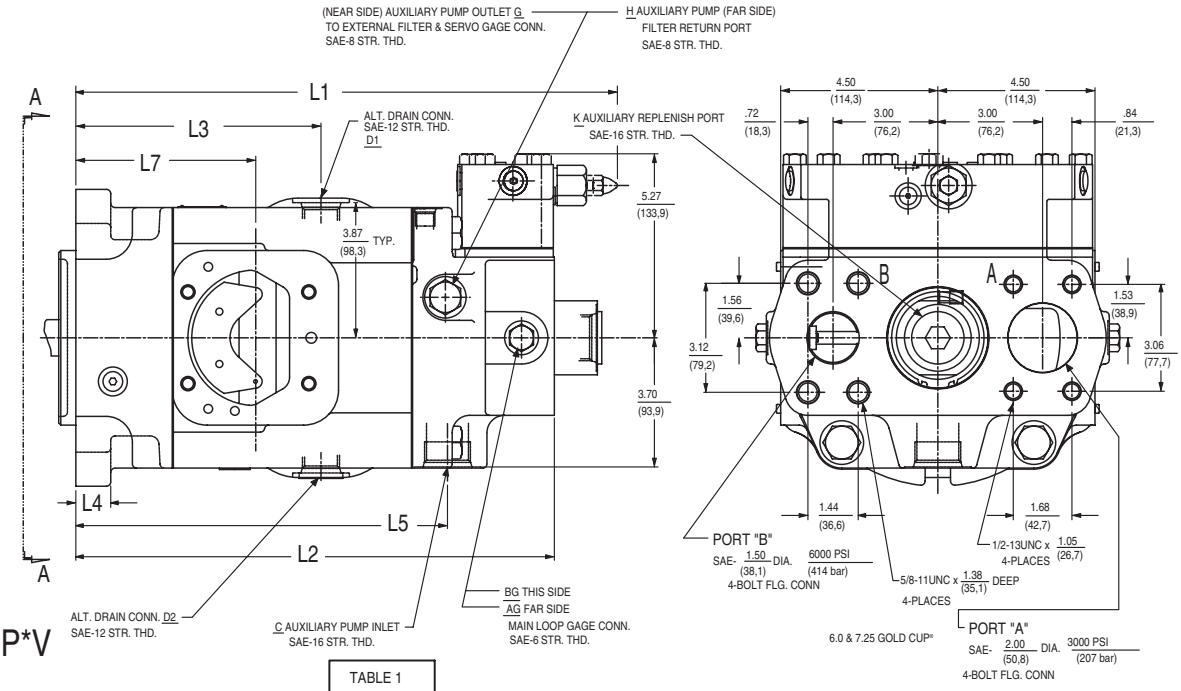


## P*D & P*P

TABLE 1

| MOUNTING | L1 | L2 | L3 | L4 | L5 | L7 |
|---|---|---|---|---|---|---|
| SAE 127-2 (SAE-C) | 15.51 (393,9) | 13.70 (348,0) | 7.02 (178,3) | 1.00 (25,4) | 10.64 (270,3) | 5.15 (130,9) |
| SAE 152-4 (SAE-D) | 16.85 (427,9) | 15.04 (382,1) | 8.36 (212,3) | .86 (21,8) | 11.98 (304,3) | 6.49 (164,8) |

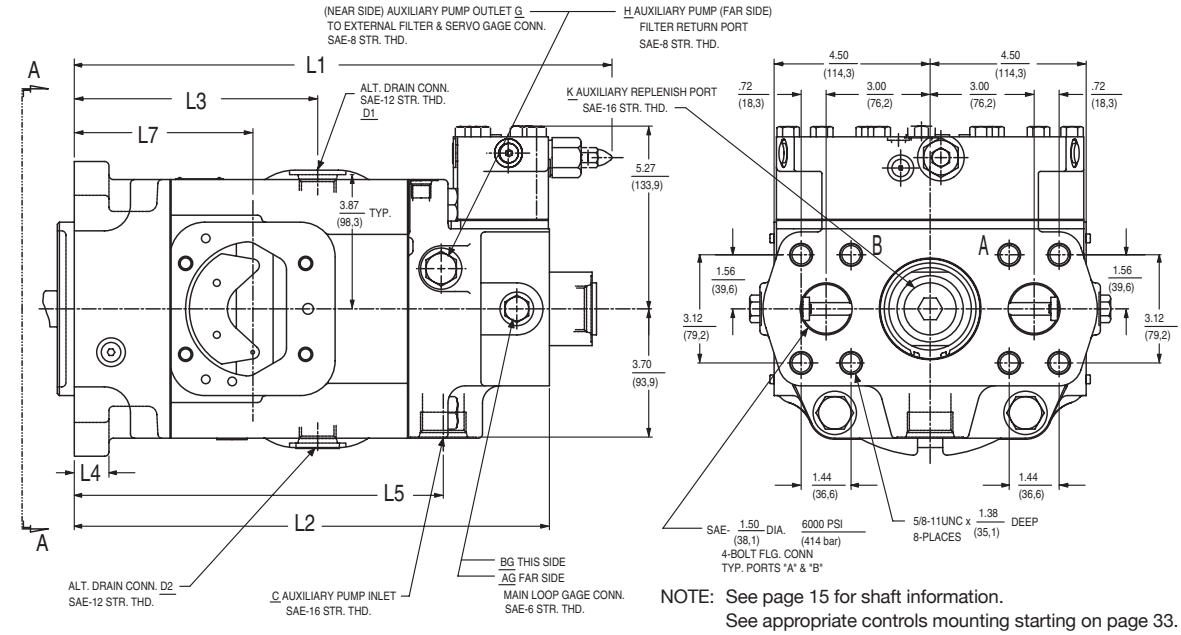


NOTE: See page 15 for shaft information.
See appropriate controls mounting starting on page 33.



Parker Hannifin Corporation
Hydraulic Pump and Power Systems Division
United States

Tel: +45 63 12 83 00 | Email: ps@hymatik.com | www.hymatik.com | Hvidkaervej 27a, DK-5250 Odense SV, Denmark

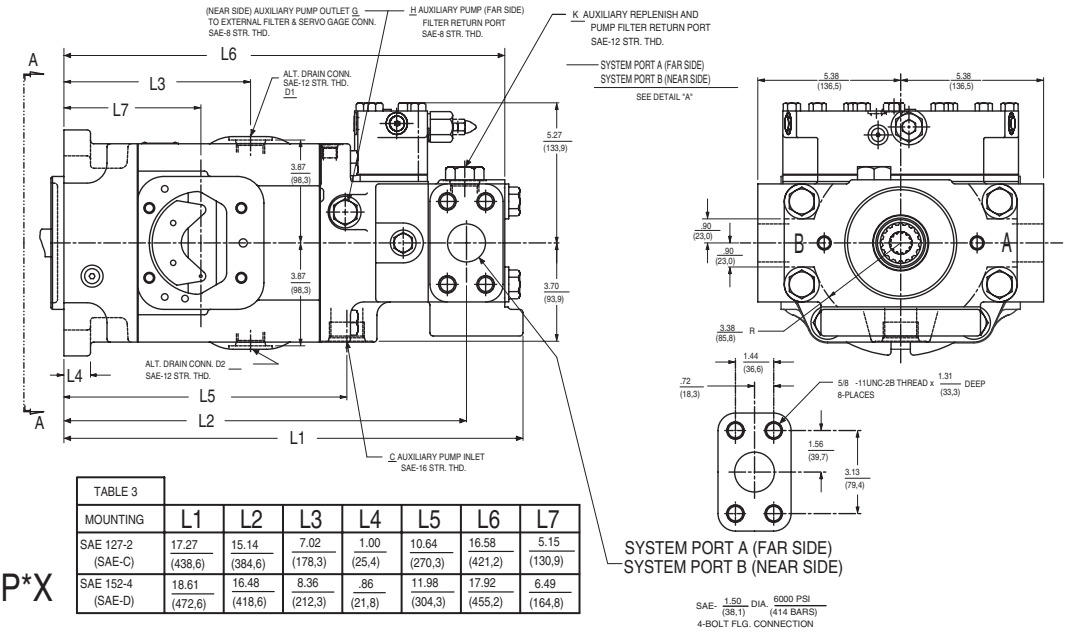


P*X

| TABLE 3 | | | | | | | |
|---|---|---|---|---|---|---|---|
| MOUNTING | L1 | L2 | L3 | L4 | L5 | L6 | L7 |
| SAE 127-2 (SAE-C) | 17.27 (438,6) | 15.14 (384,6) | 7.02 (178,3) | 1.00 (25,4) | 10.64 (270,3) | 16.58 (421,2) | 5.15 (130,9) |
| SAE 152-4 (SAE-D) | 18.61 (472,6) | 16.48 (418,6) | 8.36 (212,3) | .86 (21,8) | 11.98 (304,3) | 17.92 (455,2) | 6.49 (164,8) |

P*R

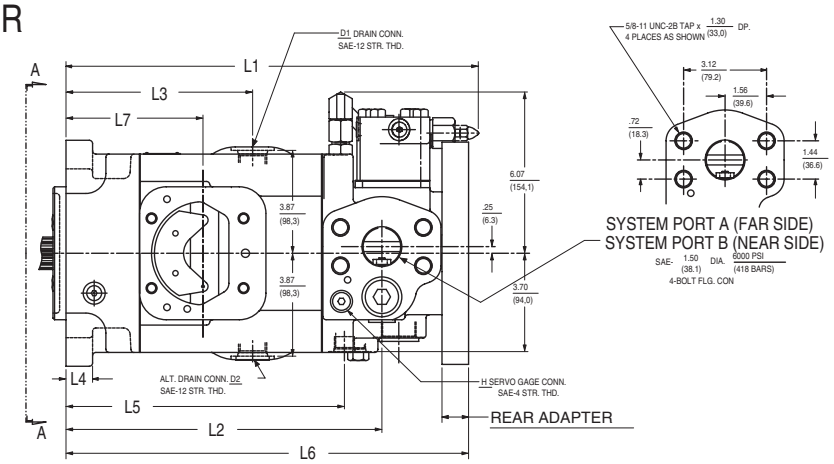


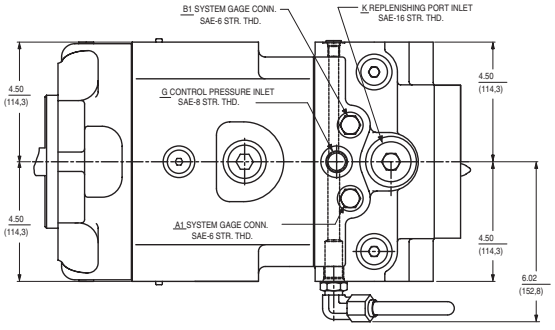


| TABLE 2 | | | | | | | |
|---|---|---|---|---|---|---|---|
| MOUNTING | L1 | L2 | L3 | L4 | L5 | L6 | L7 |
| SAE 127-2 (SAE-C) | 15.51 (393,9) | 11.88 (301,8) | 7.02 (178,3) | 1.00 (25,4) | 10.64 (270,3) | 15.14 (384,6) | 5.15 (130,9) |
| SAE 152-4 (SAE-D) | 16.85 (427,9) | 13.22 (335,9) | 8.36 (212,3) | .86 (21,8) | 11.98 (304,3) | 16.48 (418,7) | 6.49 (164,8) |

NOTE: See page 15 for shaft information.
See pages 45-54 for rear drive information.
See appropriate controls mounting starting on page 33.



Tel: +45 63 12 83 00 | Email: ps@hymatik.com | www.hymatik.com | Hvidkaervej 27a, DK-5250 Odense SV, Denmark

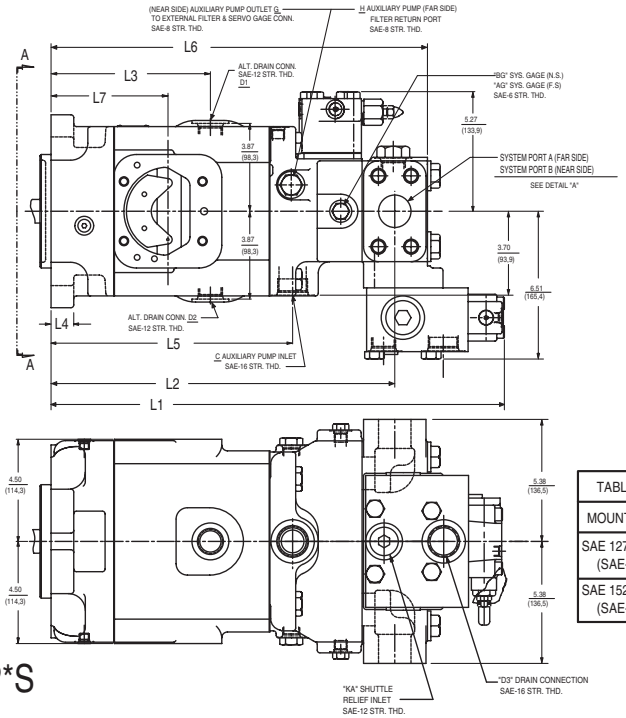


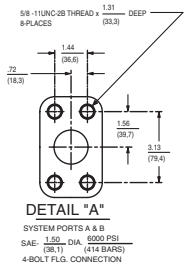


P*S

| TABLE 5 | | | | | | | |
|---|---|---|---|---|---|---|---|
| MOUNTING | L1 | L2 | L3 | L4 | L5 | L6 | L7 |
| SAE 127-2 (SAE-C) | 19.97 (507,3) | 15.14 (384,6) | 7.02 (178,3) | 1.00 (25,4) | 10.64 (270,3) | 16.58 (421,2) | 5.15 (130,9) |
| SAE 152-4 (SAE-D) | 21.31 (541,3) | 16.48 (418,6) | 8.36 (212,3) | .86 (21,8) | 11.98 (304,3) | 17.92 (455,2) | 6.49 (164,8) |

P*L

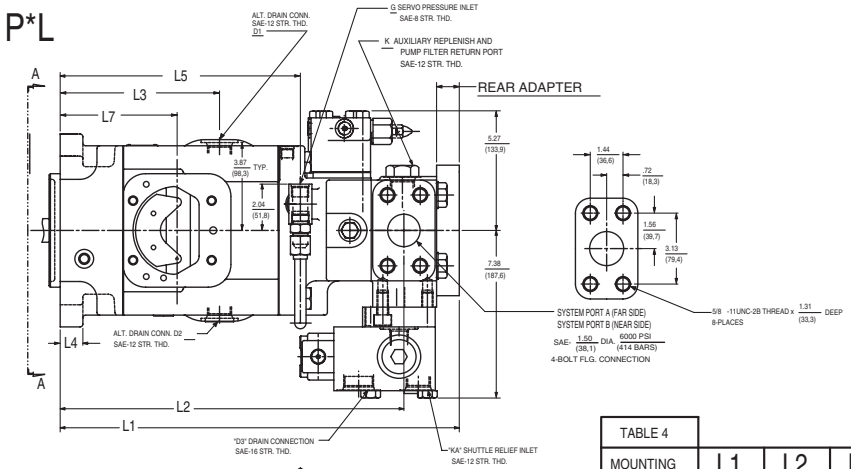


| TABLE 4 | | | | | | | |
|---|---|---|---|---|---|---|---|
| MOUNTING | L1 | L2 | L3 | L4 | L5 | L6 | L7 |
| SAE 127-2 (SAE-C) | 17.58 (446,6) | 15.14 (384,6) | 7.02 (178,3) | 1.00 (25,4) | 10.58 (268,8) | 16.58 (421,2) | 5.15 (130,9) |
| SAE 152-4 (SAE-D) | 18.92 (480,6) | 16.48 (418,6) | 8.36 (212,3) | .86 (21,8) | 11.92 (302,8) | 17.92 (455,2) | 6.49 (164,8) |

NOTE: See page 15 for shaft information.
See pages 45-54 for rear drive information.
See appropriate controls mounting starting on page 33.



Parker Hannifin Corporation
Hydraulic Pump and Power Systems Division
United States

Tel: +45 63 12 83 00 | Email: ps@hymatik.com | www.hymatik.com | Hvidkaervej 27a, DK-5250 Odense SV, Denmark

## M*F & M*G

| MOUNTING | L1 | L2 | L3 | L4 |
|---|---|---|---|---|
| SAE 127-2 (SAE-C) | 11.19 (284,2) | 11.06 (280,9) | 4.90 (124,5) | .85 (21,6) |
| SAE 152-4 (SAE-D) | 11.59 (294,3) | 11.46 (291,1) | 5.30 (134,6) | .89 (22,6) |

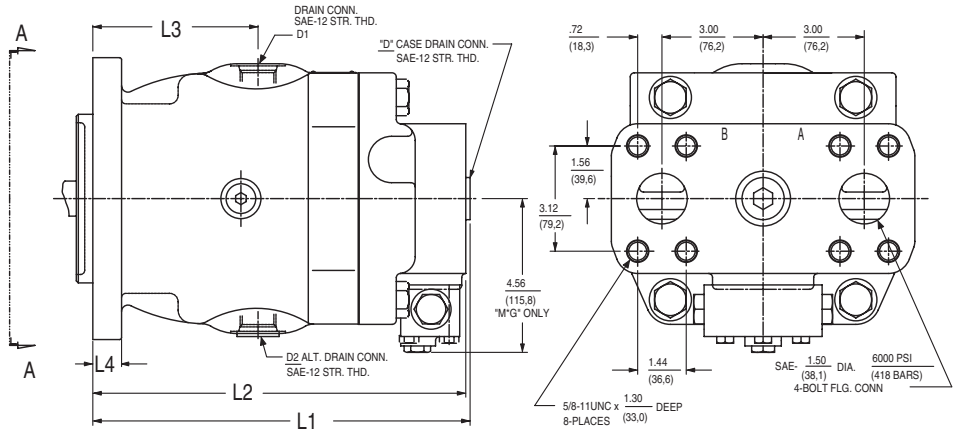


## M*M & M*N

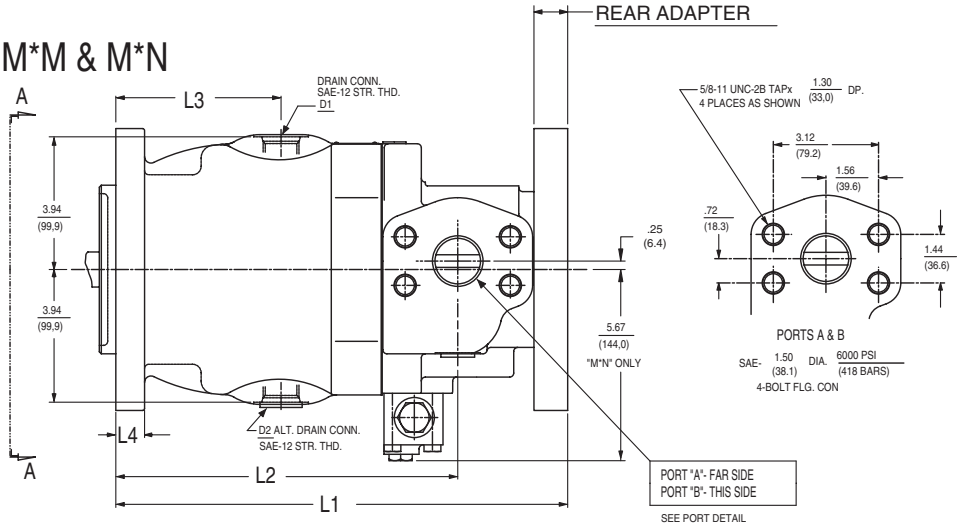


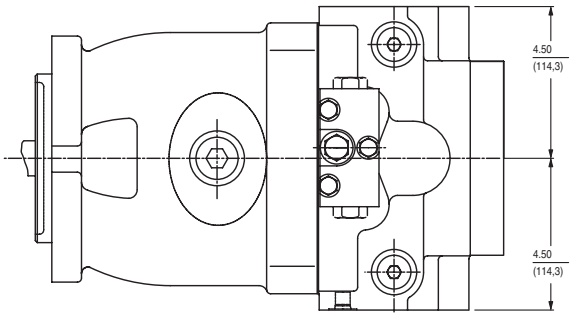


| MOUNTING | L1 | L2 | L3 | L4 |
|---|---|---|---|---|
| SAE 127-2 (SAE-C) | 13.40 (340,4) | 10.14 (257,6) | 4.90 (124,5) | .85 (21,6) |
| SAE 152-4 (SAE-D) | 13.80 (350,5) | 10.54 (267,7) | 5.30 (134,6) | .89 (22,6) |

NOTE: See page 15 for shaft information.
See pages 45-54 for rear drive information.



Tel: +45 63 12 83 00 | Email: ps@hymatik.com | www.hymatik.com | Hvidkaervej 27a, DK-5250 Odense SV, Denmark

## M*H & M*V

TABLE 14

| MOUNTING | L1 | L2 | L3 | L4 | L5 | L7 |
|---|---|---|---|---|---|---|
| SAE 127-2 (SAE-C) | 13.16 (334,3) | 12.80 (325,1) | 7.02 (178,3) | 1.00 (25,4) | 10.58 (268,8) | 5.15 (130,9) |
| SAE 152-4 (SAE-D) | 14.50 (368,3) | 14.14 (359,2) | 8.36 (212,3) | .86 (21,8) | 11.92 (302,8) | 6.49 (164,8) |

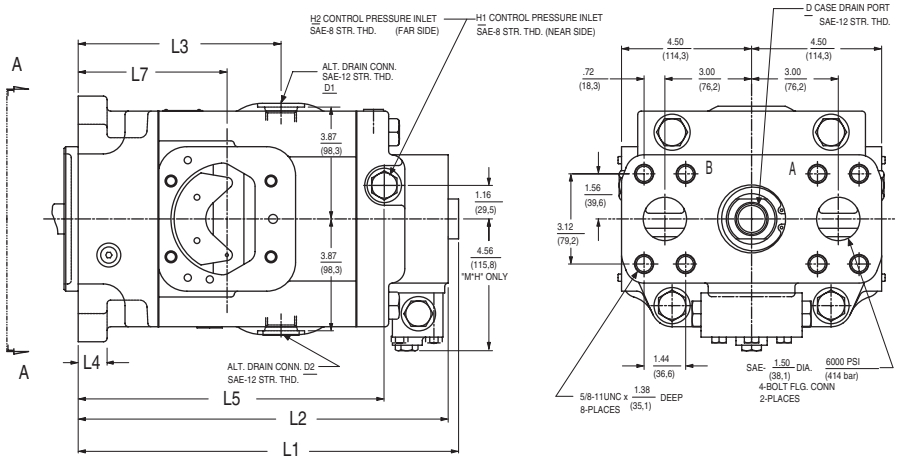


## M*R & M*L

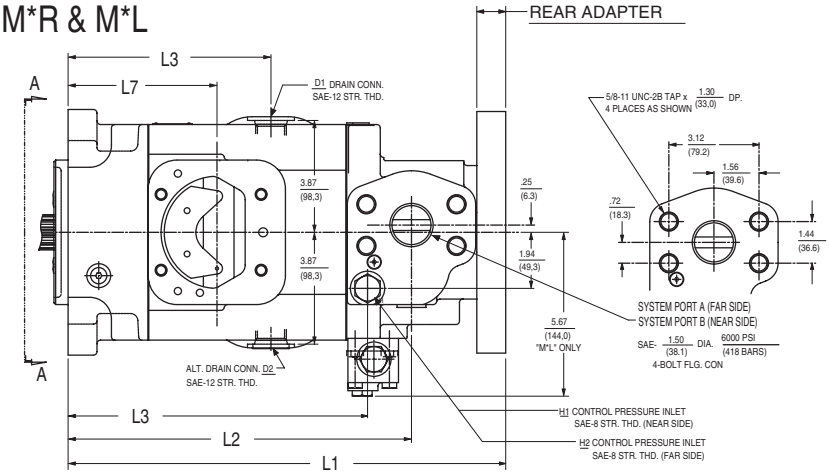


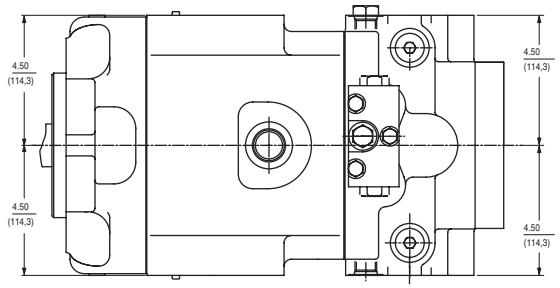


TABLE 13

| MOUNTING | L1 | L2 | L3 | L4 | L5 | L7 |
|---|---|---|---|---|---|---|
| SAE 127-2 (SAE-C) | 15.14 (384,6) | 11.88 (301,8) | 7.02 (178,3) | 1.00 (25,4) | 10.36 (263,1) | 5.15 (130,9) |
| SAE 152-4 (SAE-D) | 16.48 (418,7) | 13.22 (335,9) | 8.36 (212,3) | .86 (21,8) | 11.70 (397,2) | 6.49 (164,8) |

NOTE: See page 15 for shaft information.
See pages 45-54 for rear drive information.
See appropriate controls mounting starting on page 33.



Parker Hannifin Corporation
Hydraulic Pump and Power Systems Division
United States

Tel: +45 63 12 83 00 | Email: ps@hymatik.com | www.hymatik.com | Hvidkaervej 27a, DK-5250 Odense SV, Denmark

M*F, M*G, M*H, M*V, P*S, P*X, P*D, P*P, P*V & P*F M*R, M*L, M*M, M*N, P*L & P*R

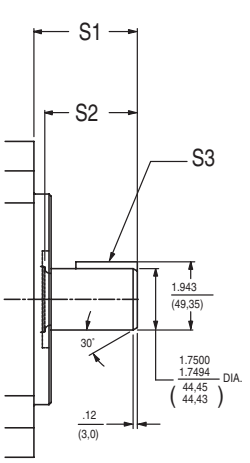


SAE 152-4 ("D" 4 BOLT)
SAE 44-1
("D" KEYED)

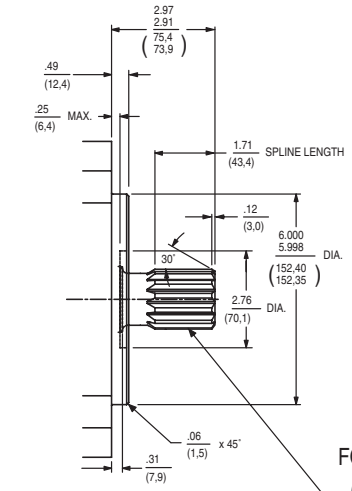


SAE 152-4 ("D" 4 BOLT)
SAE 44-4
("D" SPLINE)

FOR SAE 152-4
("D" 4-BOLT)

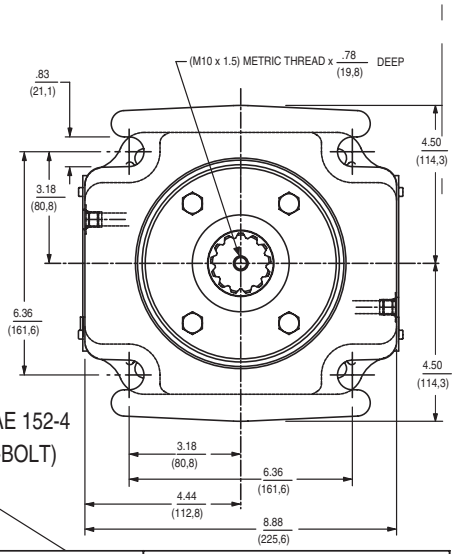


| SHAFT DEGIGNATION PUMP MODEL CODE | SHAFT | S1 | S2 | S3 |
|---|---|---|---|---|
| 04 | SAE 44-1 (SAE-D Key) | 2.97/2.91 (75,4/73,9) | 2.64 (67,0) | .438/.437 (11,12/11,10) SQ. KEY x 1.75 (44,4) |

| SHAFT DEGIGNATION PUMP MODEL CODE | |
|---|---|
| 05 | SAE INVOLUTE SPLINE J498-B 1969<br>EXTERNAL CLASS 1 FLAT ROOT SIDE FIT<br>8/16 DIA. PITCH<br>30° PRESSURE ANGLE<br>13 TEETH<br>1.7210-1.7160 (43,713/43,586) MAJOR DIA |

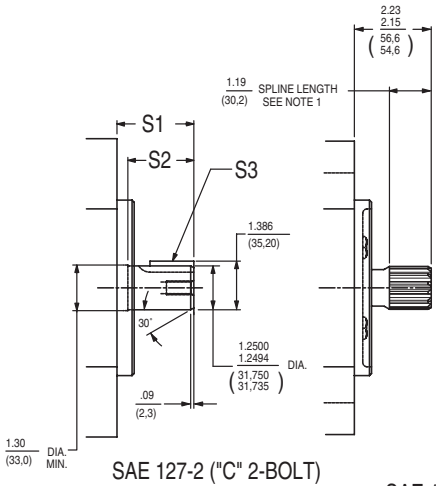


SAE 127-2 ("C" 2-BOLT)
SAE 32-1
("C" KEYED)

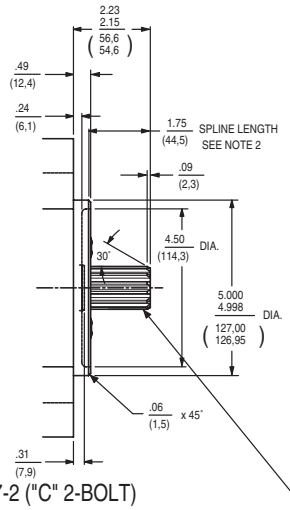


SAE 127-2 ("C" 2-BOLT)
SAE 32-4
("C" SPLINE)

FOR SAE 127-2
("C" 2-BOLT)

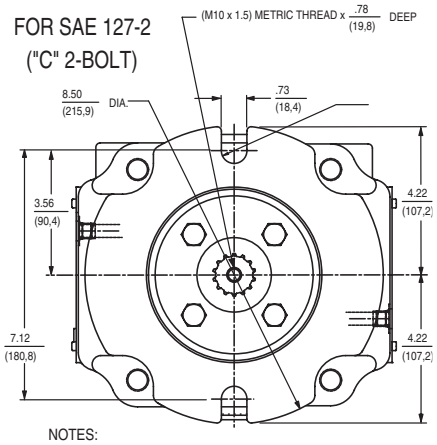


NOTES:
1. SPLINE LENGTH ONLY FOR:
M*F, M*G, M*H, M*V, P*S, P*X, P*D, P*P, P*V & P*F
2. SPLINE LENGTH ONLY FOR:
M*R, M*L, M*M, M*N, P*L & P*R

| SHAFT DEGIGNATION PUMP MODEL CODE | SHAFT | S1 | S2 | S3 |
|---|---|---|---|---|
| 02 or 07 | SAE 32-1 (SAE-C) | 2.23/2.15 (56,6/54,6) | 1.88 (47,8) | .312/.310 (7,92/7,87) SQ. KEY x LG. 1.25/1.22 (31,8/31,0) |
| 09 or 10 | SAE 32-1 LONG (SAE-C) | 3.36/3.28 (85,3/83,3) | 3.01 (76,4) | .312/.310 (7,92/7,87) SQ. KEY x LG. 2.38/2.35 (60,4/59,7) |

| SHAFT DEGIGNATION PUMP MODEL CODE | |
|---|---|
| 03 or 08 | SAE INVOLUTE SPLINE J498-B 1969<br>EXTERNAL CLASS 1 FLAT ROOT SIDE FIT<br>12/24 DIA. PITCH<br>30° PRESSURE ANGLE<br>14 TEETH<br>1.2293-1.2243 (31,224/31,097) MAJOR DIA |



Tel: +45 63 12 83 00 | Email: ps@hymatik.com | www.hymatik.com | Hvidkaervej 27a, DK-5250 Odense SV, Denmark

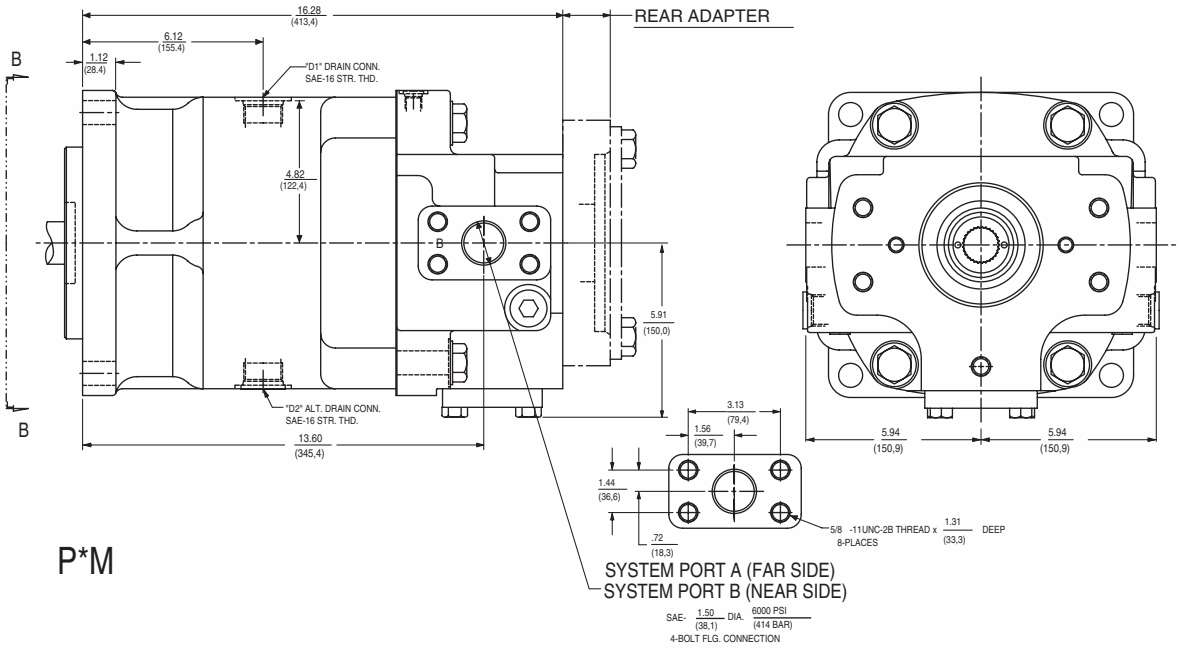


P*M

P*F

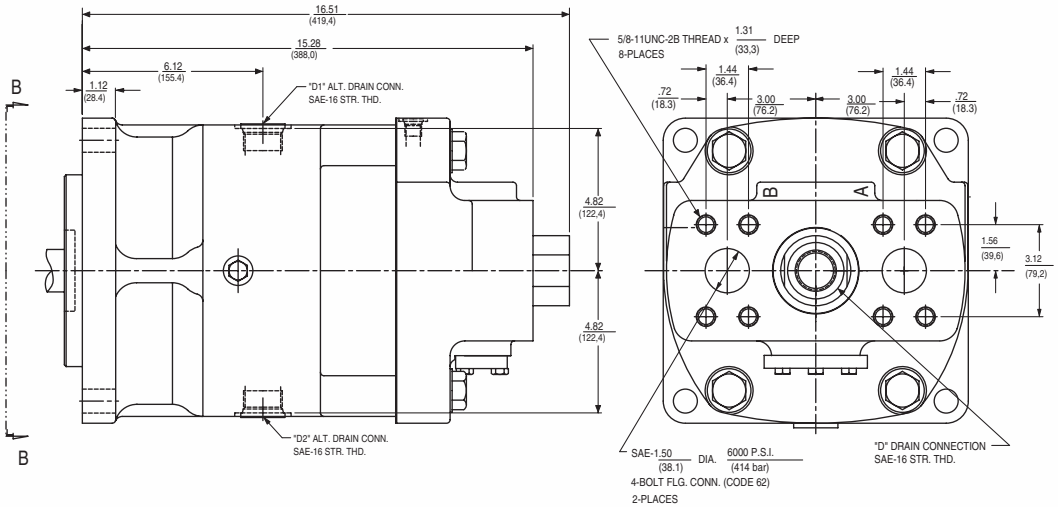


NOTE: See page 22 for shaft information.
See pages 45-54 for rear drive information.



Parker Hannifin Corporation
Hydraulic Pump and Power Systems Division
United States

Tel: +45 63 12 83 00 | Email: ps@hymatik.com | www.hymatik.com | Hvidkaervej 27a, DK-5250 Odense SV, Denmark

P*P

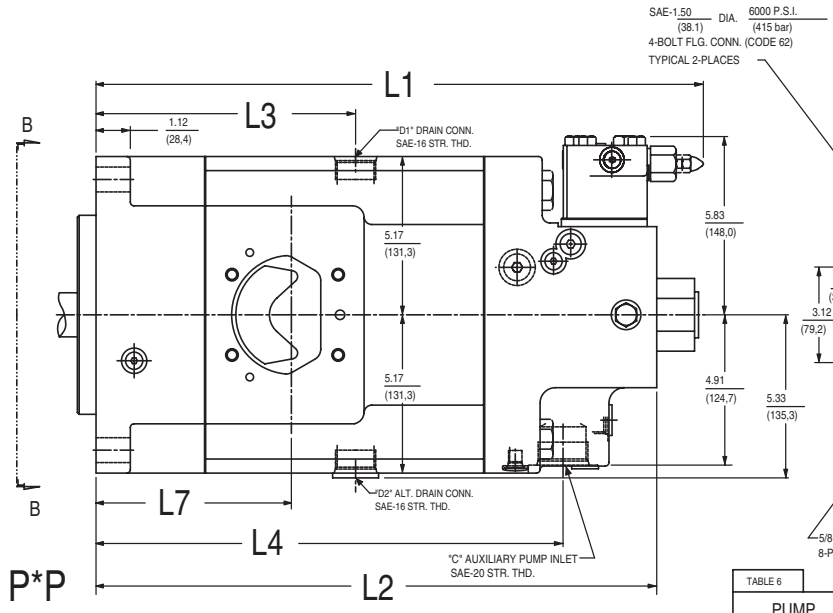


TABLE 6

| PUMP | L1 | L2 | L3 | L4 | L7 |
|---|---|---|---|---|---|
| P11P, P14P & P11V, P14V | 19.83 (503,8) | 18.31 (465,2) | 8.48 (215,3) | 15.25 (387,4) | 6.38 (162,0) |

P*V

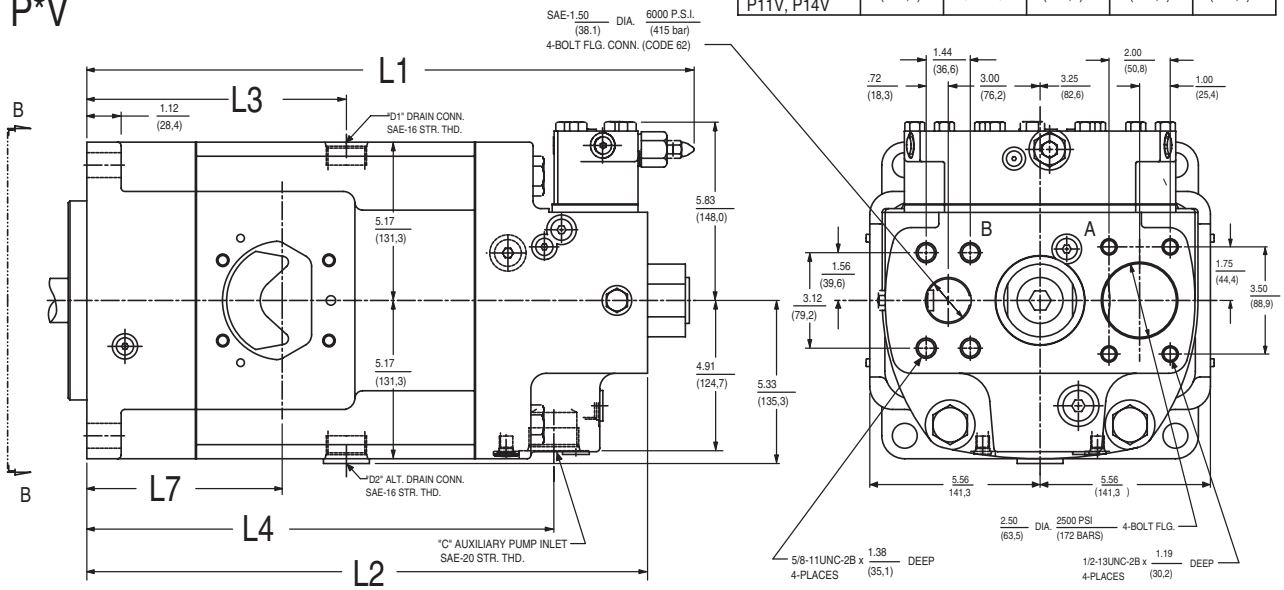


NOTE: See page 22 for shaft information.
See appropriate controls mounting starting on page 33.



Tel: +45 63 12 83 00 | Email: ps@hymatik.com | www.hymatik.com | Hvidkaervej 27a, DK-5250 Odense SV, Denmark

P*S

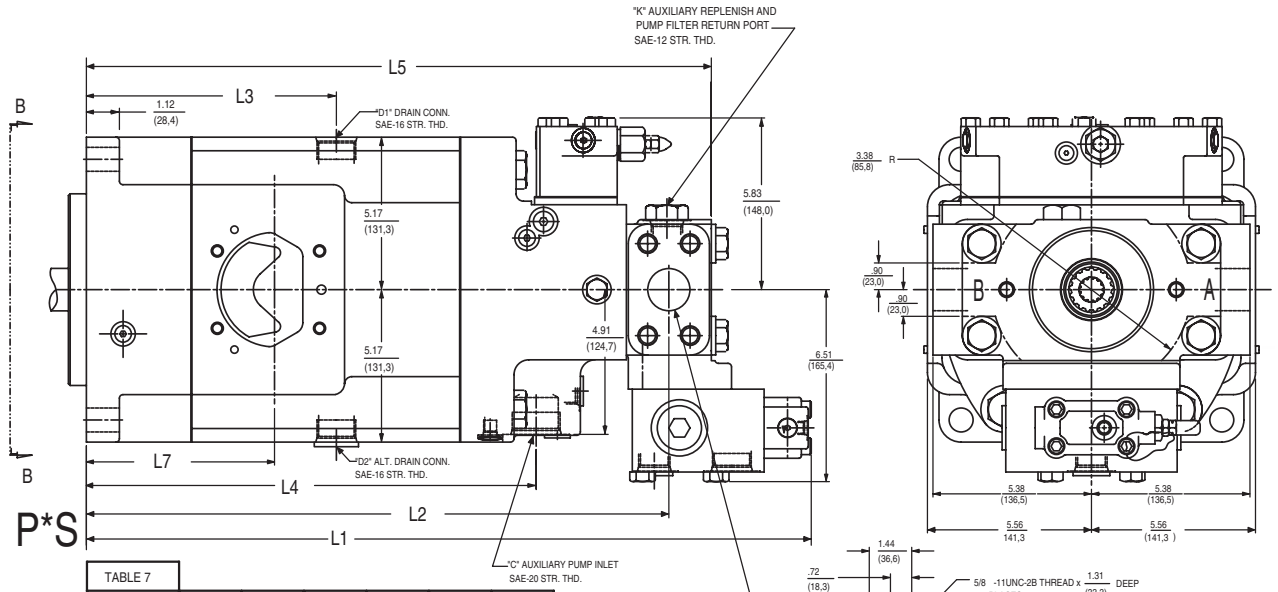


TABLE 7

| PUMP | L1 | L2 | L3 | L4 | L5 | L7 |
|---|---|---|---|---|---|---|
| P*S | 24.58 (624,4) | 19.75 (501,7) | 8.48 (215,3) | 15.25 (387,4) | 21.19 (538.3) | 6.38 (162,0) |
| P*X | 21.88 (555,7) | | | | | |

P*X

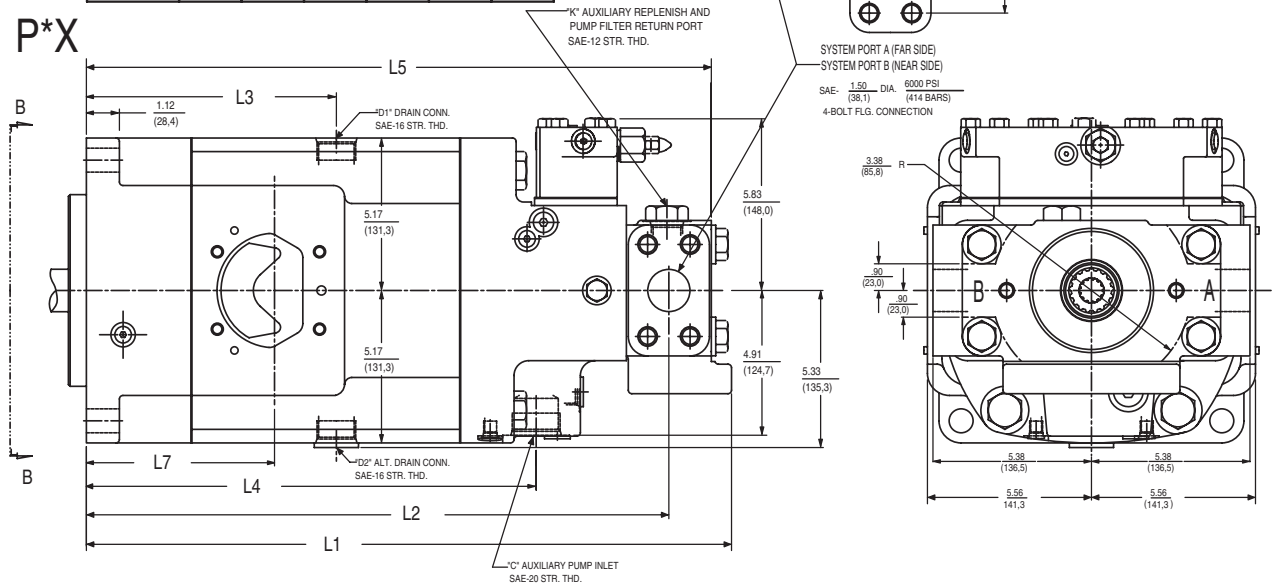


NOTE: See page 22 for shaft information.
See pages 45-54 for rear drive information.
See appropriate controls mounting starting on page 33.



Parker Hannifin Corporation
Hydraulic Pump and Power Systems Division
United States

Tel: +45 63 12 83 00 | Email: ps@hymatik.com | www.hymatik.com | Hvidkaervej 27a, DK-5250 Odense SV, Denmark

## P*R & P*L

| TABLE 8 | | | | | |
|---|---|---|---|---|---|
| PUMP | L1 | L2 | L3 | L4 | L7 |
| P*R & P*L | 18.31 (465,2) | 15.64 (397,1) | 8.48 (215,3) | 18.31 (465,2) | 6.38 (162,0) |

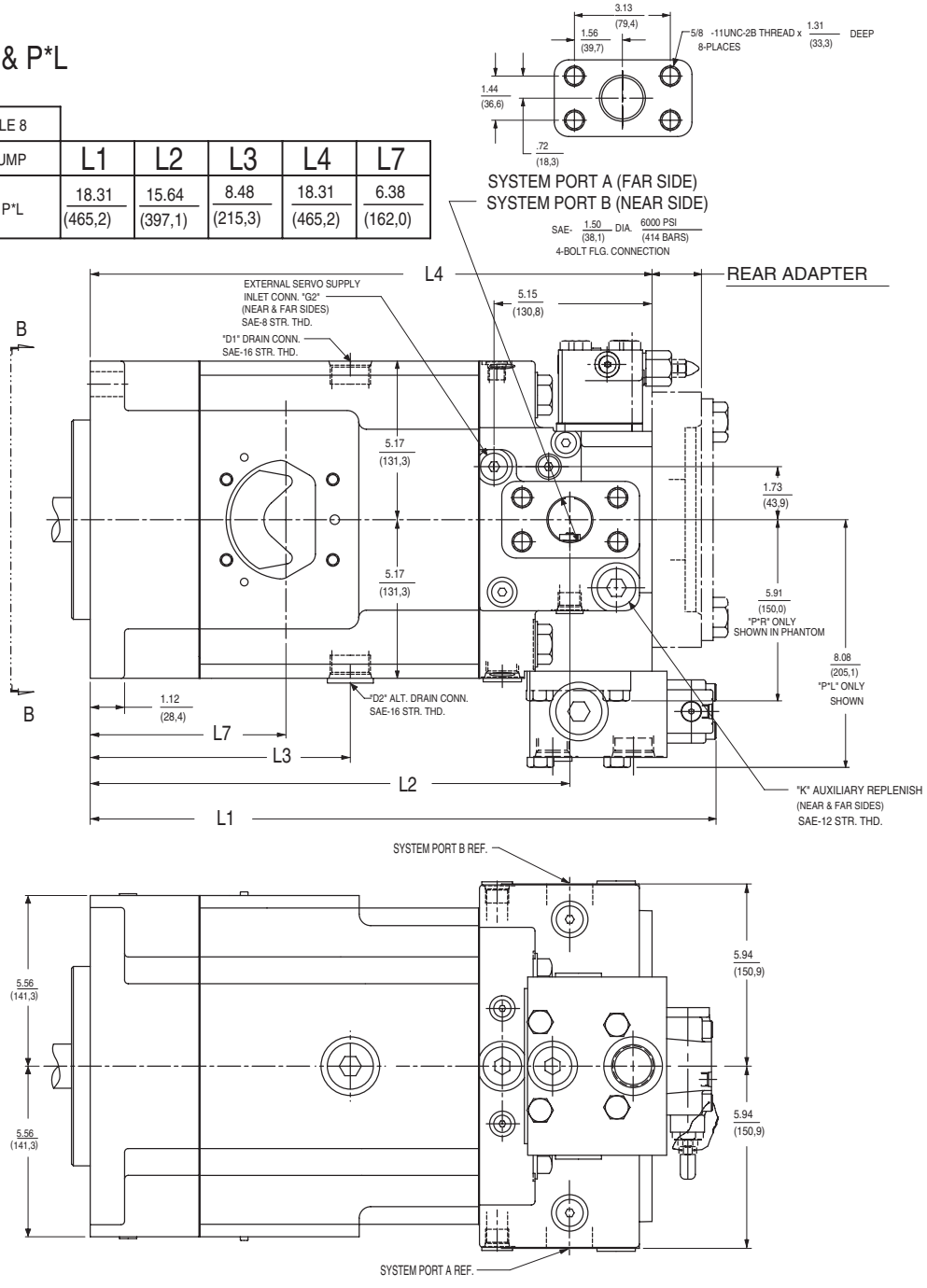


NOTE: See page 22 for shaft information.
See pages 45-54 for rear drive information.
See appropriate controls mounting starting on page 33.



Tel: +45 63 12 83 00 | Email: ps@hymatik.com | www.hymatik.com | Hvidkaervej 27a, DK-5250 Odense SV, Denmark

11-14 MOTOR DIMENSIONS

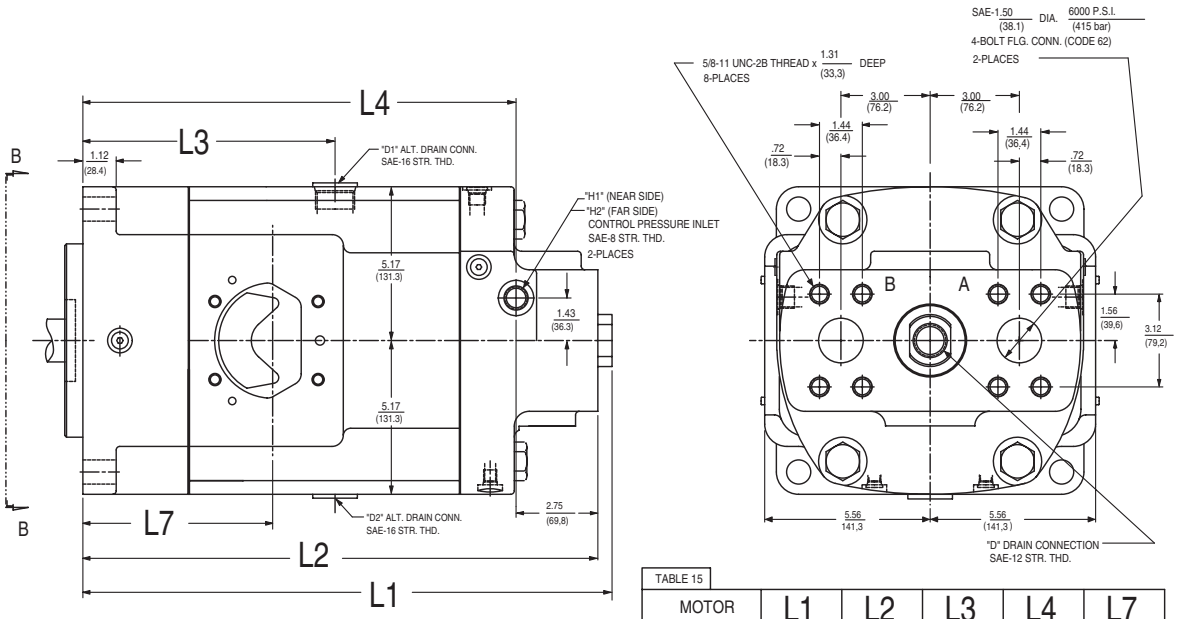


M*H & M*V

TABLE 15

| MOTOR | L1 | L2 | L3 | L4 | L7 |
|---|---|---|---|---|---|
| M11H, M11V & M14H, M14V | 17.79 (451.9) | 17.32 (439.9) | 8.48 (215,3) | 14.56 (369,9) | 6.38 (162,0) |

M*F & M*G

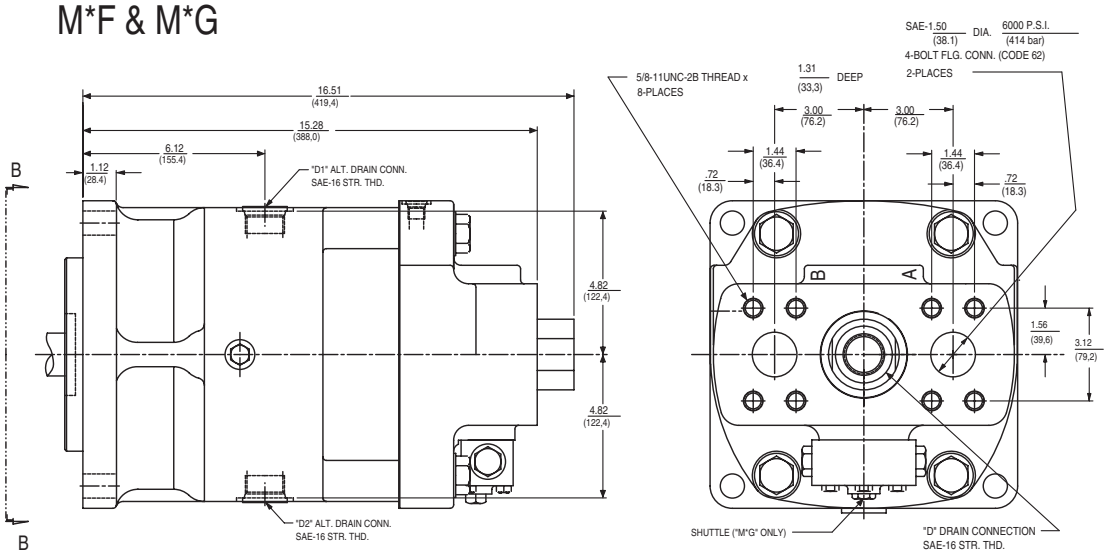


NOTE: See page 22 for shaft information.
See appropriate controls mounting starting on page 33.



Parker Hannifin Corporation
Hydraulic Pump and Power Systems Division
United States

Tel: +45 63 12 83 00 | Email: ps@hymatik.com | www.hymatik.com | Hvidkaervej 27a, DK-5250 Odense SV, Denmark

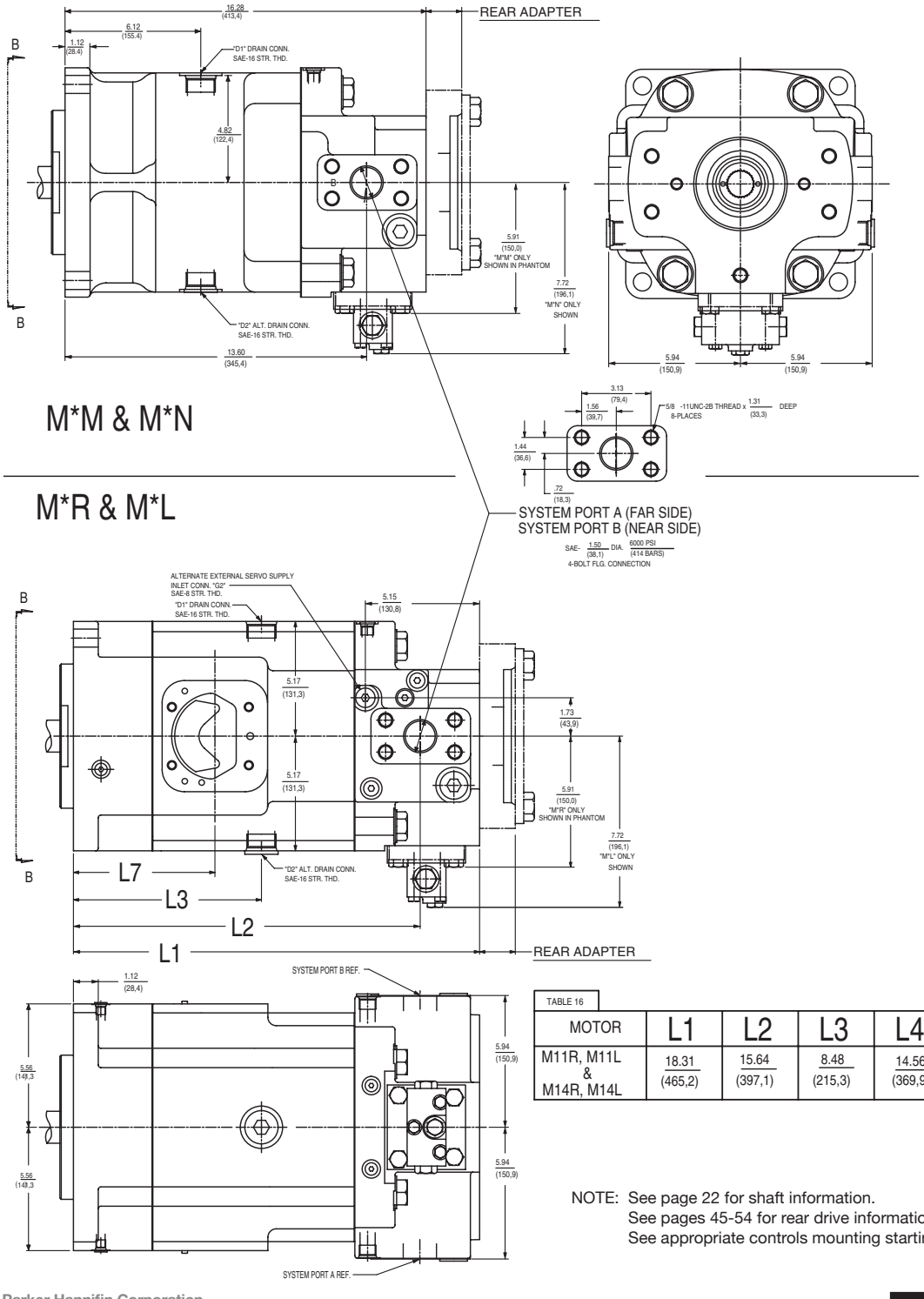


TABLE 16

| MOTOR | L1 | L2 | L3 | L4 | L7 |
|---|---|---|---|---|---|
| M11R, M11L & M14R, M14L | 18.31 (465,2) | 15.64 (397,1) | 8.48 (215,3) | 14.56 (369,9) | 6.38 (162,0) |

NOTE: See page 22 for shaft information.
See pages 45-54 for rear drive information.
See appropriate controls mounting starting on page 33.



Tel: +45 63 12 83 00 | Email: ps@hymatik.com | www.hymatik.com | Hvidkaervej 27a, DK-5250 Odense SV, Denmark

# M*F, M*G, M*H, M*V, P*S, P*X, P*P, P*V & P*F M*R, M*L, M*M, M*N, P*L & P*R

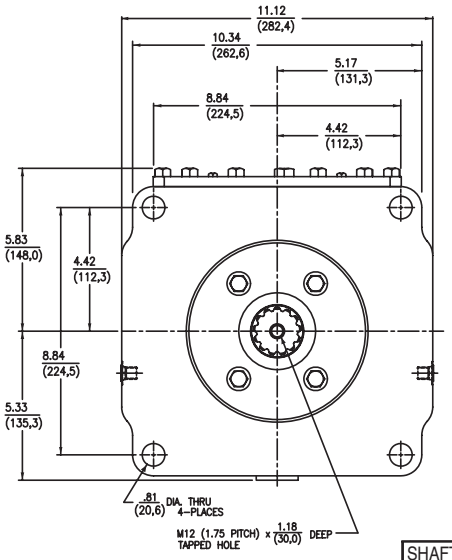


## VIEW B-B

NOTES:
1. SPLINE LENGTH AND NECK ONLY FOR:
   M*F, M*G, M*H, M*V, P*S, P*X, P*P, P*V & P*F
2. SPLINE LENGTH ONLY FOR:
   M*R, M*L, M*M, M*N, P*L & P*R

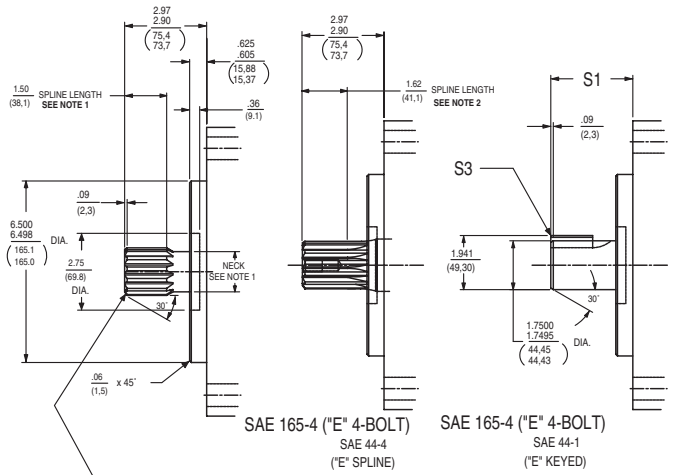


| SHAFT DEGIGNATION PUMP MODEL CODE | |
|---|---|
| 03 or 08 | SAE INVOLUTE SPLINE DATA J498B 1969<br>FLAT ROOT SIDE FIT EXTERNAL CLASS 1<br>8/16 PITCH<br>30° PRESSURE ANGLE<br>13 TEETH<br>1.7210-1.7160 (43,713-43,586) MAJOR DIA. |

| SHAFT DEGIGNATION PUMP MODEL CODE | SHAFT | S1 | S3 | |
|---|---|---|---|---|
| 02 or 07 | SAE 44-1 (SAE-E) | 2.97/2.90 (75,4/73,7) | .437/.435 (11,10/11.05) | SQ. KEY x LG. 1.50 (38,1) |
| 09 or 10 | SAE 44-1 LONG (SAE-E) | 3.97/3.90 (100,8/99,1) | .437/.435 (11,10/11.05) | SQ. KEY x LG. 2.50 (63,5) |



Parker Hannifin Corporation
Hydraulic Pump and Power Systems Division
United States

Tel: +45 63 12 83 00 | Email: ps@hymatik.com | www.hymatik.com | Hvidkaervej 27a, DK-5250 Odense SV, Denmark

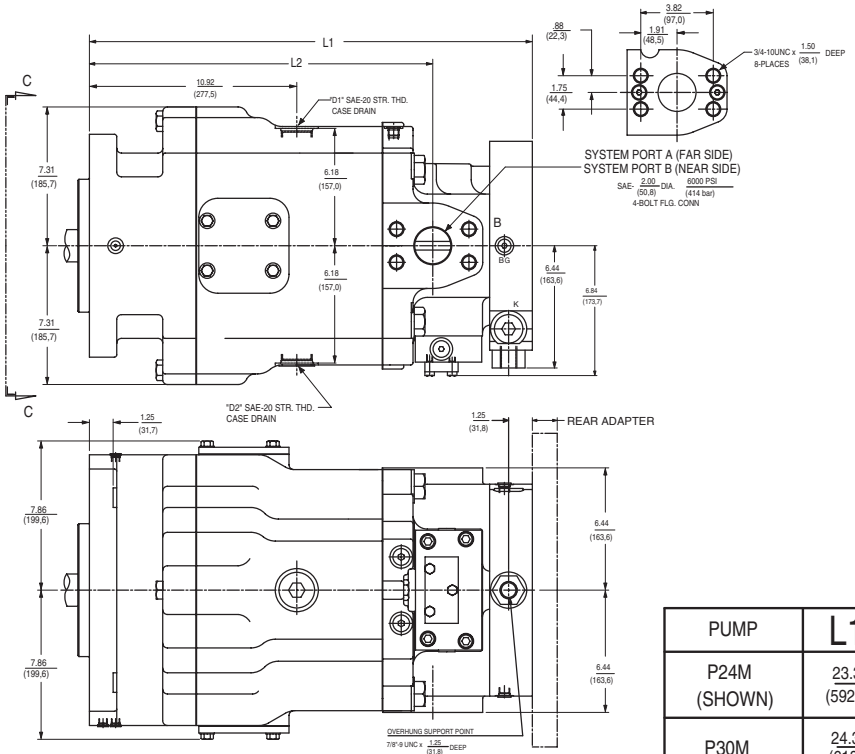


P*M

| PUMP | L1 | L2 |
|---|---|---|
| P24M (SHOWN) | 23.33 (592,6) | 18.09 (459,4) |
| P30M | 24.33 (618,0) | 19.09 (484,8) |

P*F

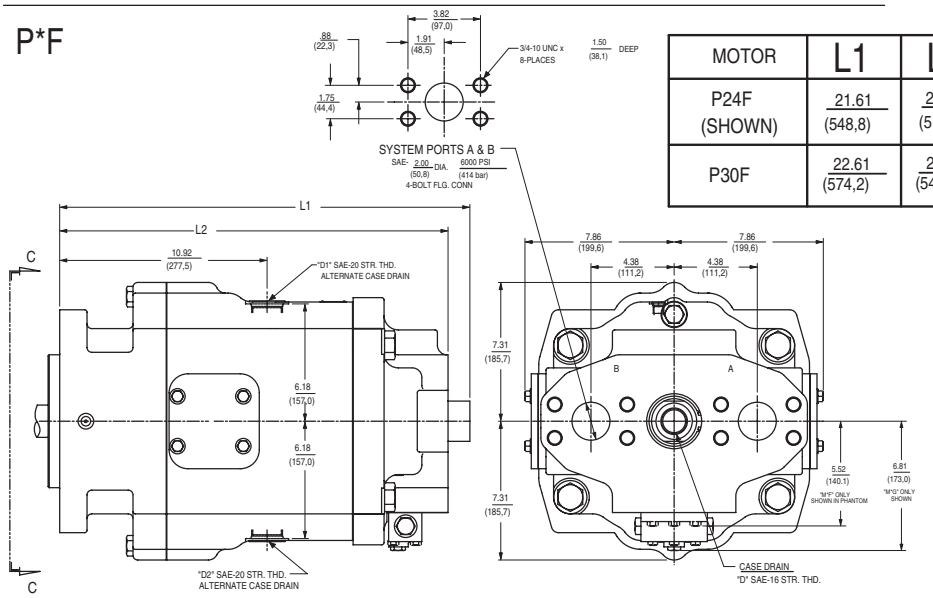


| MOTOR | L1 | L2 |
|---|---|---|
| P24F (SHOWN) | 21.61 (548,8) | 20.46 (519,6) |
| P30F | 22.61 (574,2) | 21.46 (545,0) |

NOTE: See page 31 for shaft information.



Tel: +45 63 12 83 00 | Email: ps@hymatik.com | www.hymatik.com | Hvidkaervej 27a, DK-5250 Odense SV, Denmark

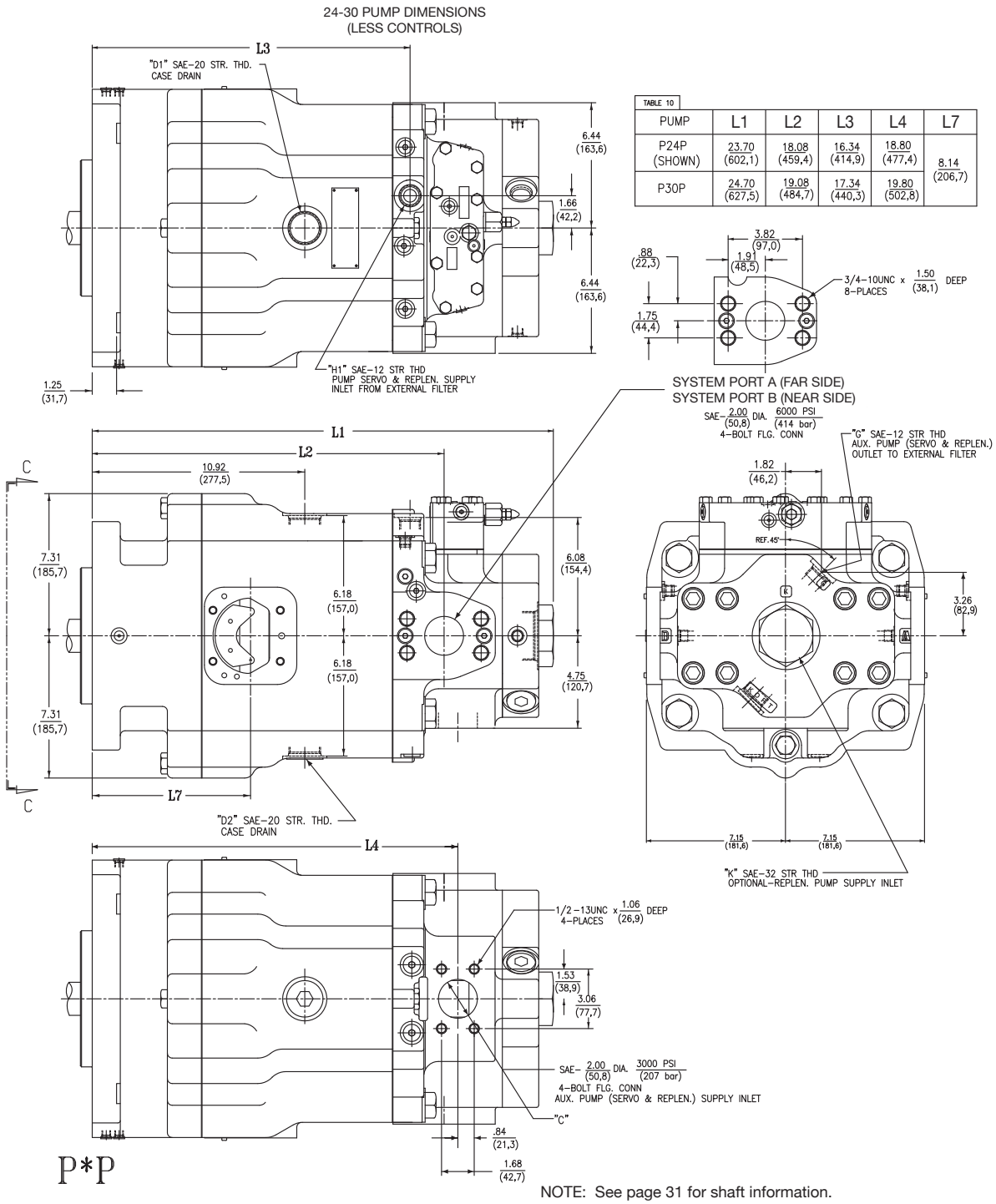


TABLE 10

| PUMP | L1 | L2 | L3 | L4 | L7 |
|---|---|---|---|---|---|
| P24P (SHOWN) | 23.70 (602,1) | 18.08 (459,4) | 16.34 (414,9) | 18.80 (477,4) | 8.14 (206,7) |
| P30P | 24.70 (627,5) | 19.08 (484,7) | 17.34 (440,3) | 19.80 (502,8) | |

NOTE: See page 31 for shaft information.
See appropriate controls mounting starting on page 33.

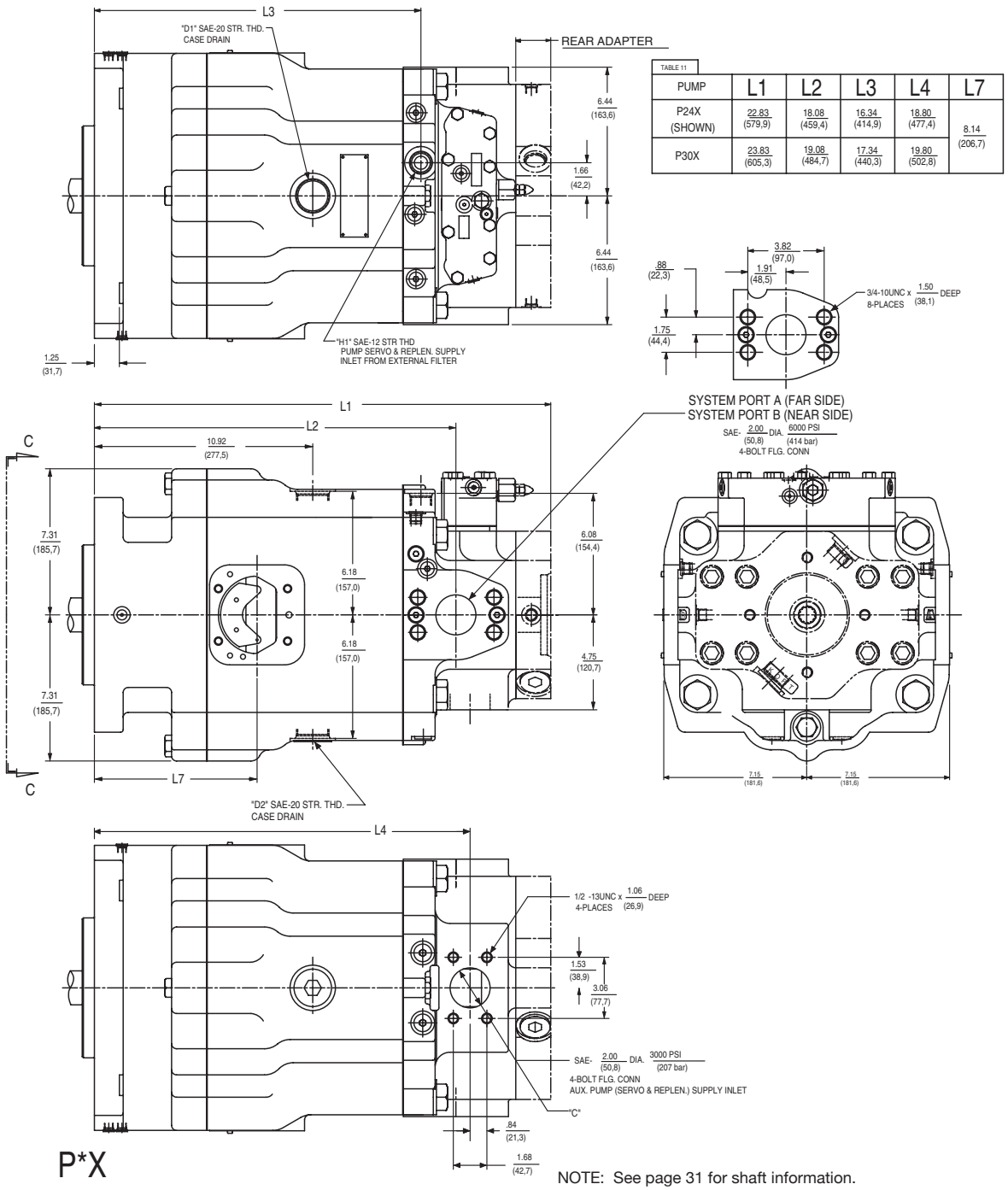


TABLE 11

| PUMP | L1 | L2 | L3 | L4 | L7 |
|---|---|---|---|---|---|
| P24X (SHOWN) | 22.83 (579,9) | 18.08 (459,4) | 16.34 (414,9) | 18.80 (477,4) | 8.14 (206,7) |
| P30X | 23.83 (605,3) | 19.08 (484,7) | 17.34 (440,3) | 19.80 (502,8) | |

NOTE: See page 31 for shaft information.
See pages 45-54 for rear drive information.
See appropriate controls mounting starting on page 33.



Tel: +45 63 12 83 00 | Email: ps@hymatik.com | www.hymatik.com | Hvidkaervej 27a, DK-5250 Odense SV, Denmark

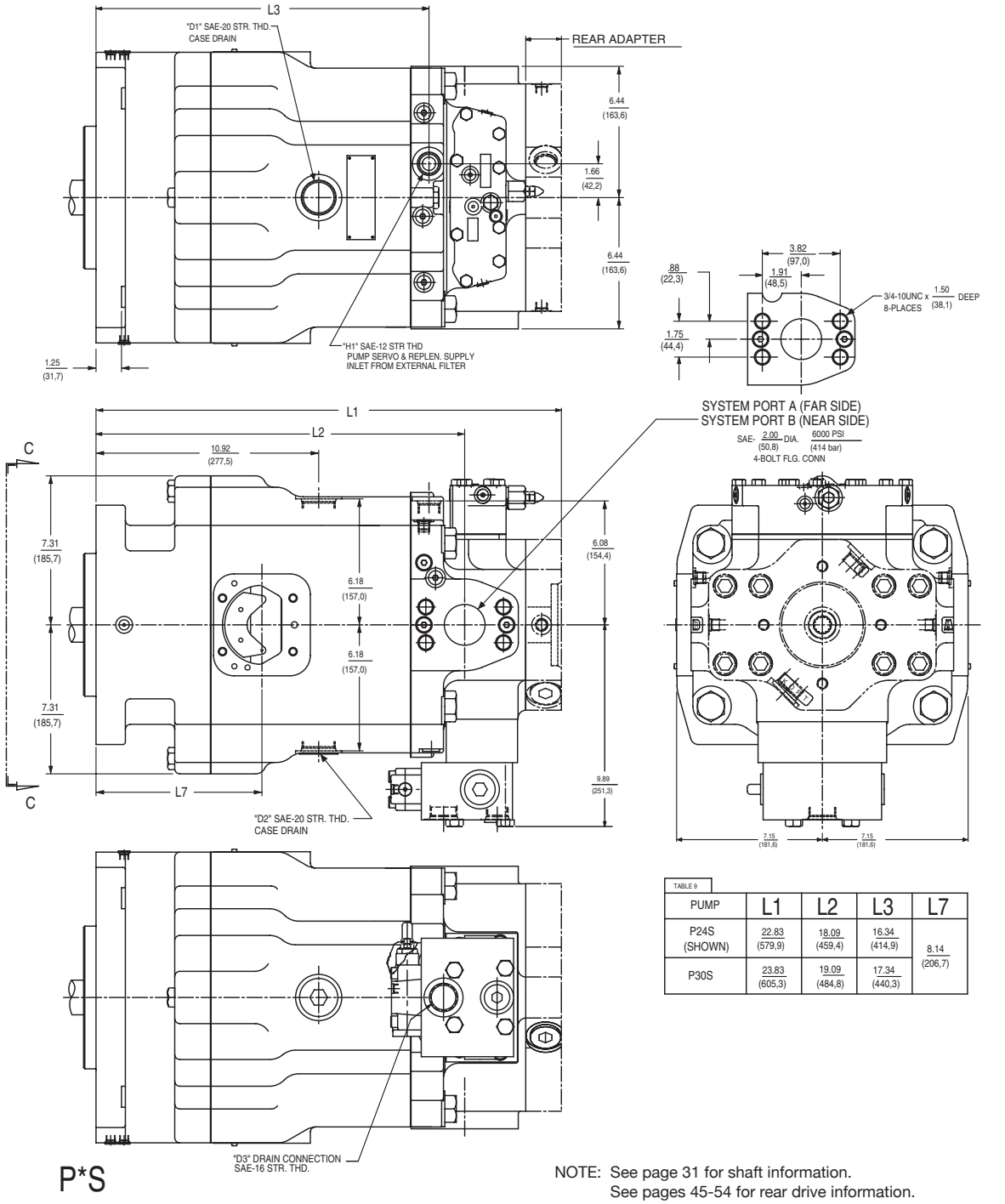


TABLE 9

| PUMP | L1 | L2 | L3 | L7 |
|---|---|---|---|---|
| P24S (SHOWN) | 22.83 (579,9) | 18.09 (459,4) | 16.34 (414,9) | 8.14 (206,7) |
| P30S | 23.83 (605,3) | 19.09 (484,8) | 17.34 (440,3) | |

NOTE: See page 31 for shaft information.
See pages 45-54 for rear drive information.
See appropriate controls mounting starting on page 33.



Parker Hannifin Corporation
Hydraulic Pump and Power Systems Division
United States

Tel: +45 63 12 83 00 | Email: ps@hymatik.com | www.hymatik.com | Hvidkaervej 27a, DK-5250 Odense SV, Denmark

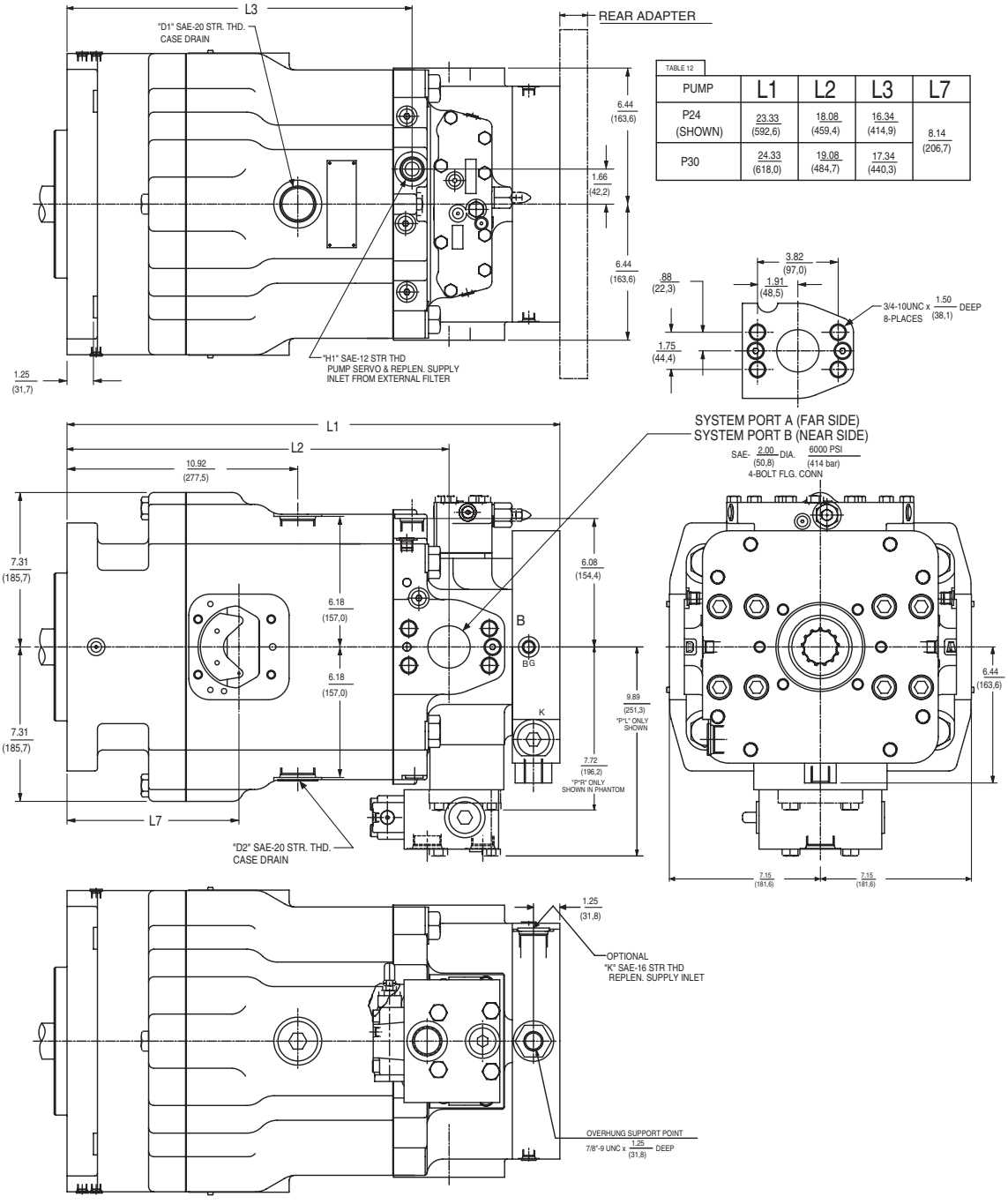


TABLE 12

| PUMP | L1 | L2 | L3 | L7 |
|---|---|---|---|---|
| P24 (SHOWN) | 23.33 (592,6) | 18.08 (459,4) | 16.34 (414,9) | 8.14 (206,7) |
| P30 | 24.33 (618,0) | 19.08 (484,7) | 17.34 (440,3) | |

P*R & P*L

NOTE: See page 31 for shaft information.
See pages 45-54 for rear drive information.
See appropriate controls mounting starting on page 33.



Tel: +45 63 12 83 00 | Email: ps@hymatik.com | www.hymatik.com | Hvidkaervej 27a, DK-5250 Odense SV, Denmark

## M*H & M*V

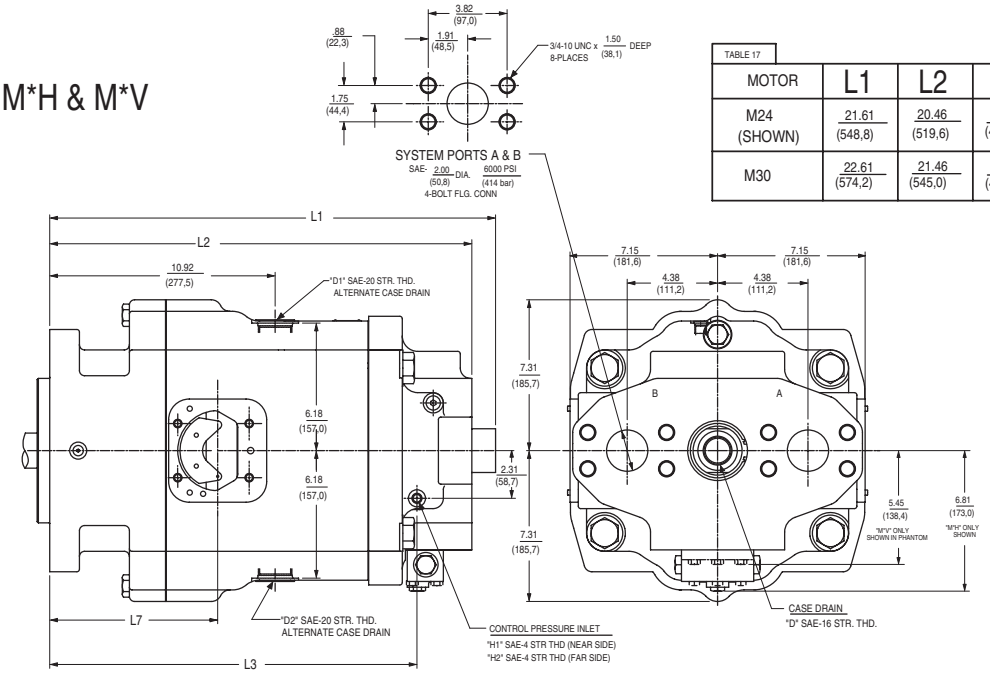


TABLE 17

| MOTOR | L1 | L2 | L3 | L7 |
|---|---|---|---|---|
| M24 (SHOWN) | 21.61 (548,8) | 20.46 (519,6) | 17.80 (452,0) | 8.14 (206,7) |
| M30 | 22.61 (574,2) | 21.46 (545,0) | 18.80 (477,4) | |

## M*F & M*G

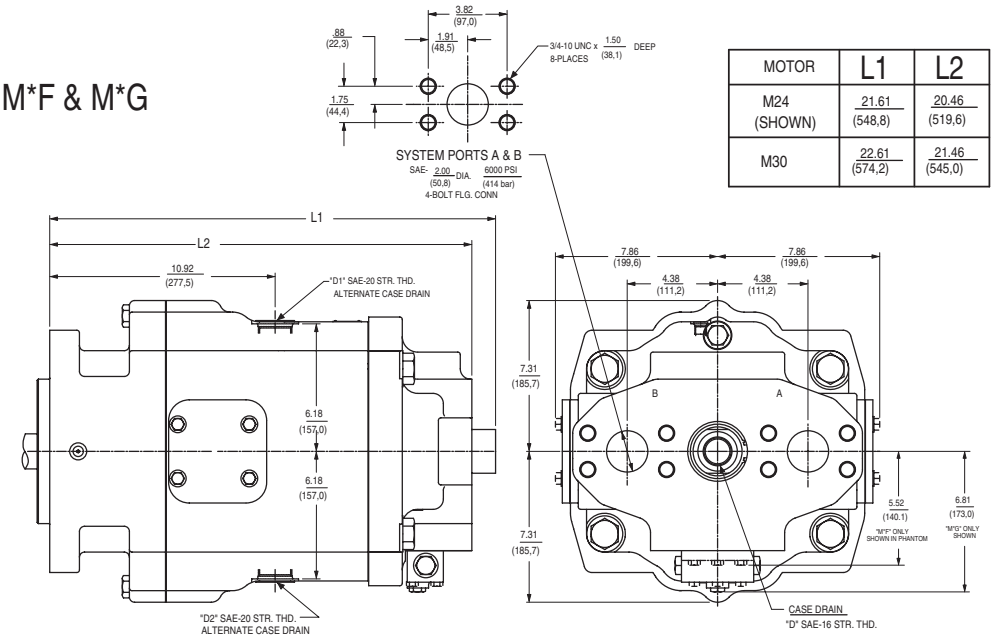


| MOTOR | L1 | L2 |
|---|---|---|
| M24 (SHOWN) | 21.61 (548,8) | 20.46 (519,6) |
| M30 | 22.61 (574,2) | 21.46 (545,0) |

NOTE: See page 31 for shaft information.
See appropriate controls mounting starting on page 33.



Parker Hannifin Corporation
Hydraulic Pump and Power Systems Division
United States

Tel: +45 63 12 83 00 | Email: ps@hymatik.com | www.hymatik.com | Hvidkaervej 27a, DK-5250 Odense SV, Denmark

# M*M & M*N

| PUMP | L1 | L2 |
|---|---|---|
| M24 (SHOWN) | 23.33 (592,6) | 18.09 (459,4) |
| M30 | 24.33 (618,0) | 19.09 (484,8) |

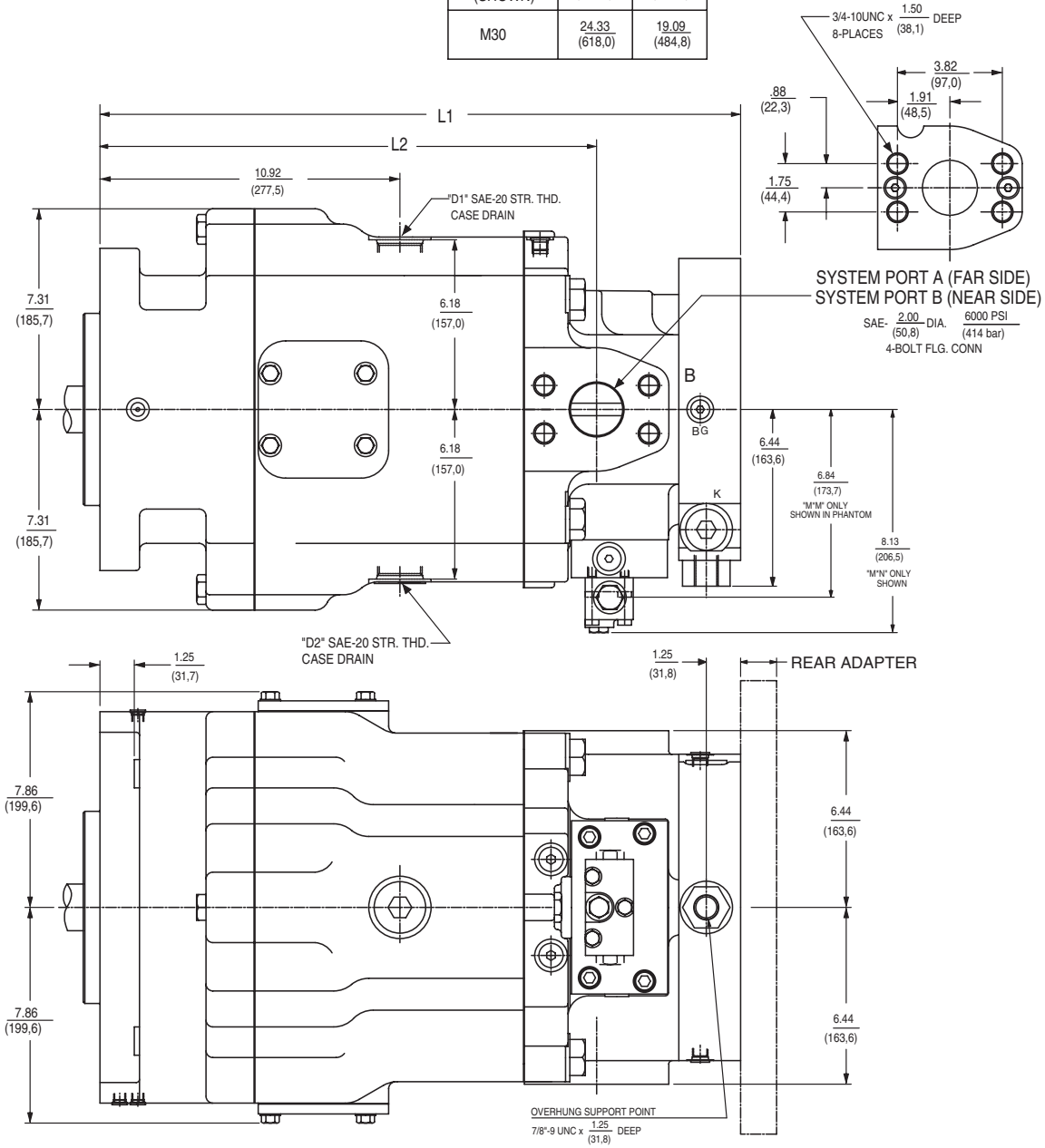


NOTE: See page 31 for shaft information.
See pages 45-54 for rear drive information.
See appropriate controls mounting starting on page 33.



Tel: +45 63 12 83 00 | Email: ps@hymatik.com | www.hymatik.com | Hvidkaervej 27a, DK-5250 Odense SV, Denmark

## M*R & M*L

TABLE 18

| PUMP | L1 | L2 | L7 |
|---|---|---|---|
| M24 (SHOWN) | 23.33 (592,6) | 18.09 (459,4) | 8.14 (206,7) |
| M30 | 24.33 (618,0) | 19.09 (484,8) | |

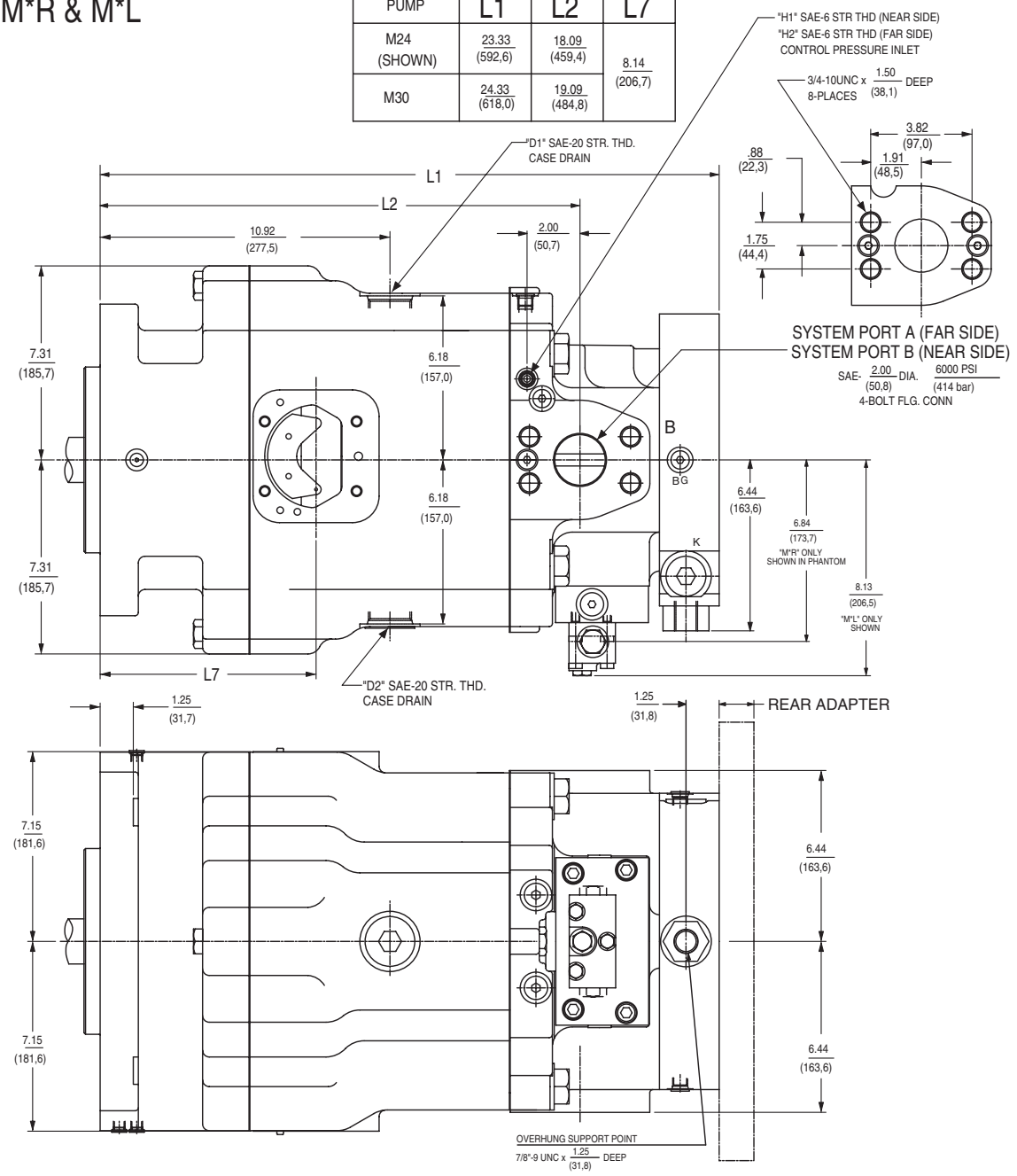


NOTE: See page 31 for shaft information.
See pages 45-54 for rear drive information.
See appropriate controls mounting starting on page 33.



Parker Hannifin Corporation
Hydraulic Pump and Power Systems Division
United States

Tel: +45 63 12 83 00 | Email: ps@hymatik.com | www.hymatik.com | Hvidkaervej 27a, DK-5250 Odense SV, Denmark

# M*F, M*G, M*H, M*V, P*S, P*X, P*P & P*F M*R, M*L, M*M, M*N, P*L & P*R

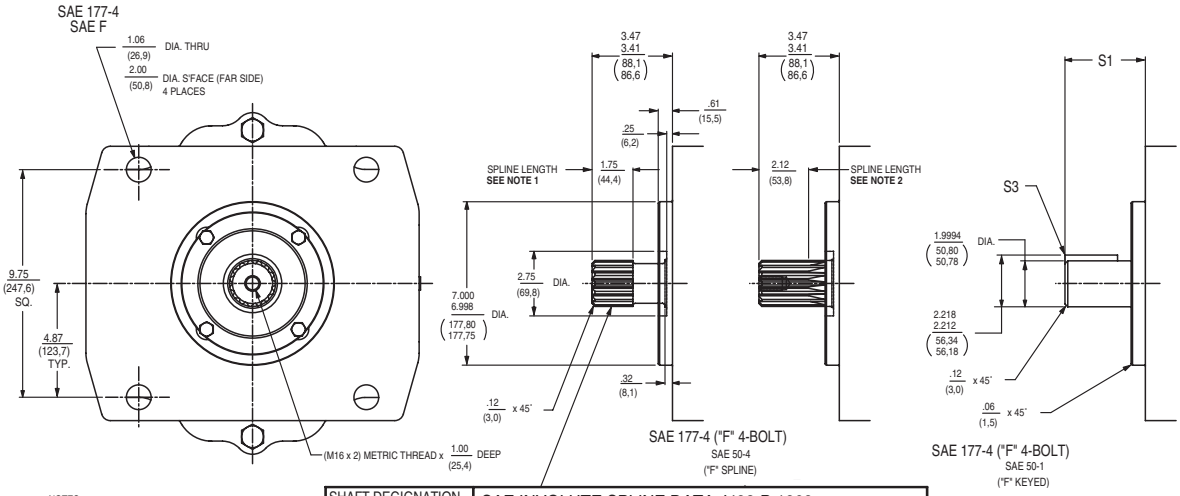


NOTES:
1. SPLINE LENGTH AND NECK ONLY FOR:
M*F, M*G, M*H, M*V, P*S, P*X, P*P & P*F
2. SPLINE LENGTH ONLY FOR:
M*R, M*L, M*M, M*N, P*L & P*R

| SHAFT DEGIGNATION PUMP MODEL CODE | |
|---|---|
| 03 or 08 | SAE INVOLUTE SPLINE DATA J498-B 1969<br>FLAT ROOT SIDE FIT EXTERNAL CLASS-1<br>8/16 PITCH<br>30˚ PRESSURE ANGLE<br>15 TEETH<br>1.9710-1.9660/ (50,063-49,936) MAJOR DIA. |

| SHAFT DEGIGNATION PUMP MODEL CODE | SHAFT | S1 | S3 | | |
|---|---|---|---|---|---|
| 02 or 07 | SAE 50-1 (SAE-F) | 3.47/3.41 (88,1/86,6) | .500/.498 (12,70/12.65) | SQ. KEY x LG. | 2.25 (57,1) |
| 09 or 10 | SAE 50-1 LONG (SAE-F) | 5.35/5.29 (135,9/134,4) | .500/.498 (12,70/12.65) | SQ. KEY x LG. | 4.13 (104,9) |



Tel: +45 63 12 83 00 | Email: ps@hymatik.com | www.hymatik.com | Hvidkaervej 27a, DK-5250 Odense SV, Denmark

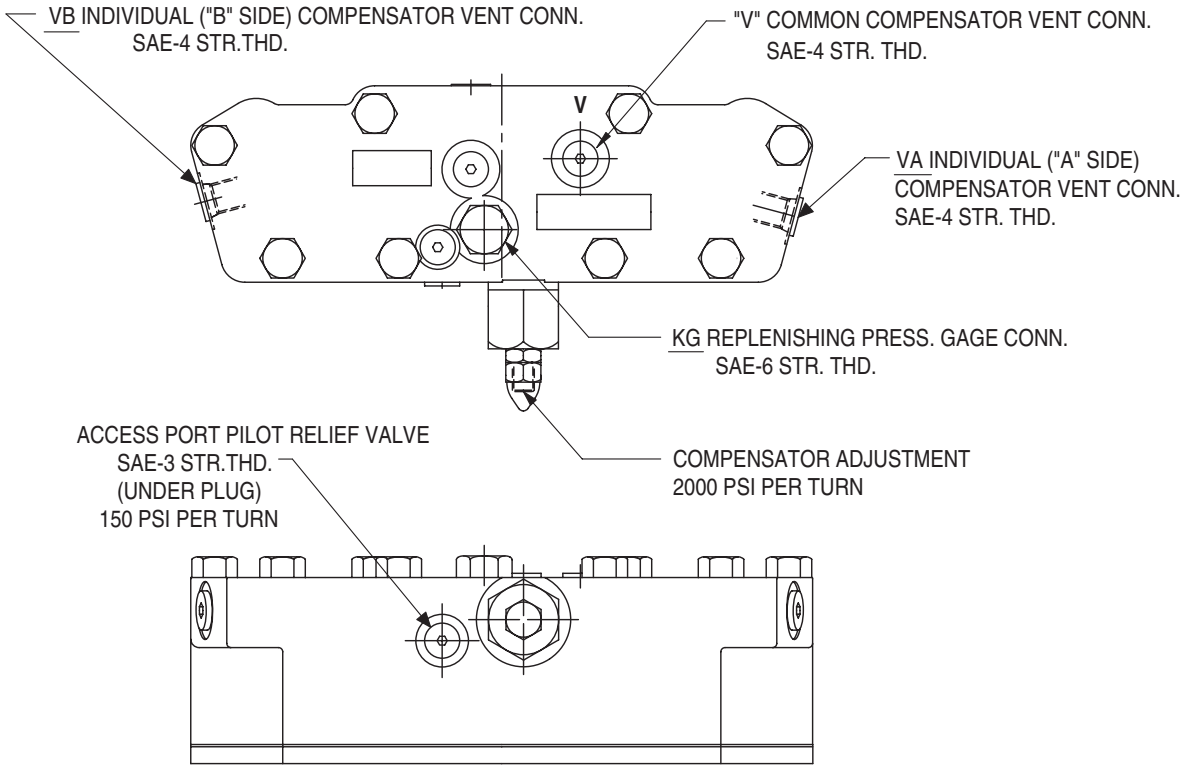




Parker Hannifin Corporation
Hydraulic Pump and Power Systems Division
United States

Tel: +45 63 12 83 00 | Email: ps@hymatik.com | www.hymatik.com | Hvidkaervej 27a, DK-5250 Odense SV, Denmark

| -B- CONTROL MTG. POSITION | | | | |
|---|---|---|---|---|
| CONTROL OPTION | FIG. | PUMP ROT. | ROTARY SERVO INPUT SHAFT ROTATION | PORT "A" |
| "10*" | 1 | CW | CCW | INLET |
| | 1 | CCW | CW | INLET |

| -A- CONTROL MTG. POSITION | | | | |
|---|---|---|---|---|
| CONTROL OPTION | FIG. | PUMP ROT. | ROTARY SERVO INPUT SHAFT ROTATION | PORT "A" |
| "10*" | 2 | CW | CW | INLET |
| | 2 | CCW | CCW | INLET |

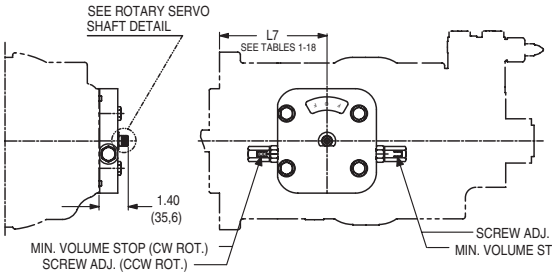


FIGURE -1

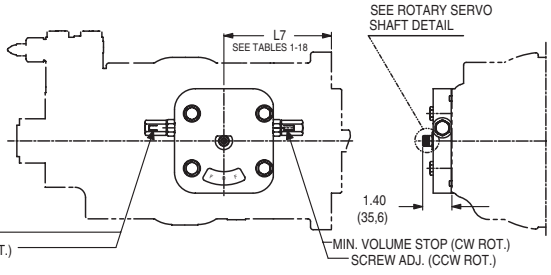


FIGURE -2

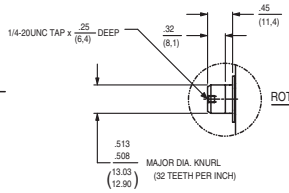


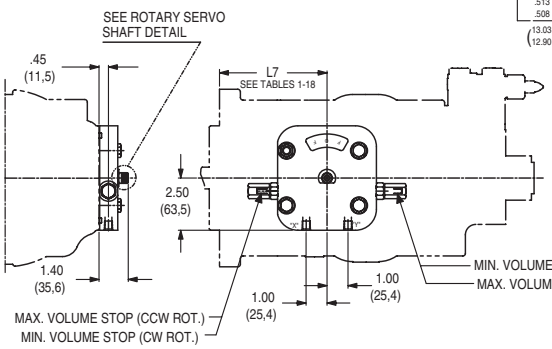


FIGURE -1

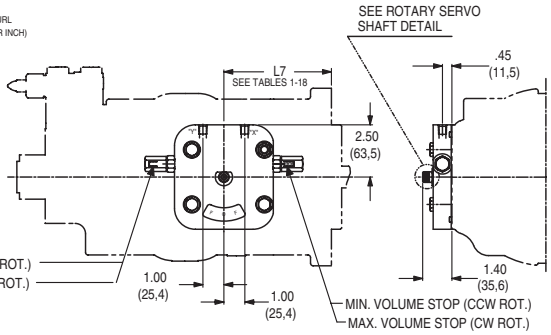


FIGURE -2

| -B- CONTROL MTG. POSITION | | | | | |
|---|---|---|---|---|---|
| CONTROL SPRING OFF-SET TO MIN, VOLUME | | | | | |
| CONTROL OPTION | FIG. | PUMP ROT. | PRESSURE SIGNAL TO: | | PORT "A" |
| | | | 1/8-27 N.P.T.F. PORT "X" | 1/8-27 N.P.T.F. PORT "Y" | |
| "2A*" | 1 | CW | MAX. VOL. | MIN. VOL. | INLET |
| | 1 | CCW | MIN. VOL. | MAX. VOL. | INLET |

| -A- CONTROL MTG. POSITION | | | | | |
|---|---|---|---|---|---|
| CONTROL SPRING OFF-SET TO MIN, VOLUME | | | | | |
| CONTROL OPTION | FIG. | PUMP ROT. | PRESSURE SIGNAL TO: | | PORT "A" |
| | | | 1/8-27 N.P.T.F. PORT "X" | 1/8-27 N.P.T.F. PORT "Y" | |
| "2A*" | 2 | CW | MIN. VOL. | MAX. VOL. | INLET |
| | 2 | CCW | MAX. VOL. | MIN. VOL. | INLET |



Tel: +45 63 12 83 00 | Email: ps@hymatik.com | www.hymatik.com | Hvidkaervej 27a, DK-5250 Odense SV, Denmark

| -B- CONTROL MTG. POSITION | | | | | | |
|---|---|---|---|---|---|---|
| CONTROL SPRING OFF-SET TO MIN, VOLUME | | | | | | |
| CONTROL OPTION | FIG. | PUMP ROT. | PRESSURE SIGNAL TO SAE-4 STR. THD. PORT: | ROTARY SERVO INPUT SHAFT ROTATION | PORT "A" | PORT "B" |
| "2H*" | 1 | CW | "X" | CCW | INLET | OUTLET |
| | 1 | CCW | "Y" | CW | INLET | OUTLET |
| | 1 | CW | "Y" | CW | OUTLET | INLET |
| | 1 | CCW | "X" | CCW | OUTLET | INLET |

| -A- CONTROL MTG. POSITION | | | | | | |
|---|---|---|---|---|---|---|
| CONTROL SPRING OFF-SET TO MIN, VOLUME | | | | | | |
| CONTROL OPTION | FIG. | PUMP ROT. | PRESSURE SIGNAL TO SAE-4 STR. THD. PORT: | ROTARY SERVO INPUT SHAFT ROTATION | PORT "A" | PORT "B" |
| "2H*" | 2 | CW | "Y" | CW | INLET | OUTLET |
| | 2 | CCW | "X" | CCW | INLET | OUTLET |
| | 2 | CW | "X" | CCW | OUTLET | INLET |
| | 2 | CCW | "Y" | CW | OUTLET | INLET |

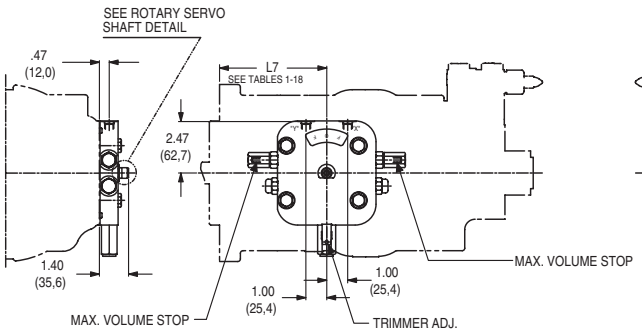


FIGURE -1

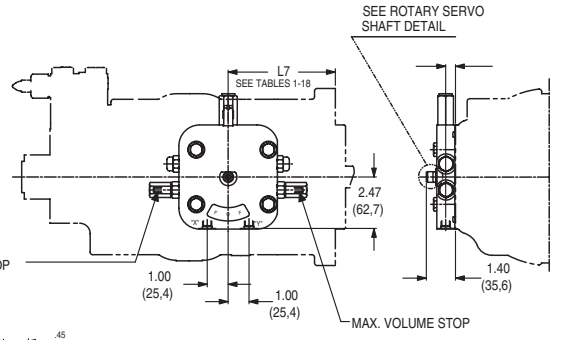


FIGURE -2

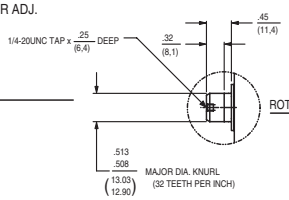


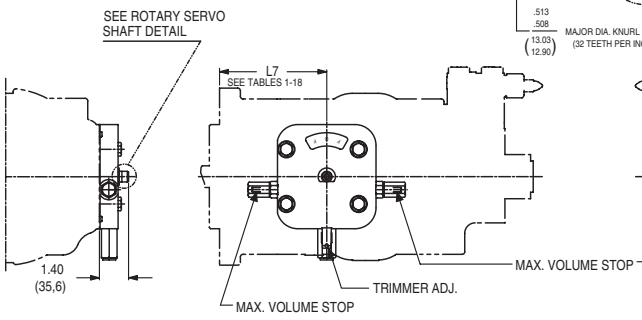


FIGURE -1

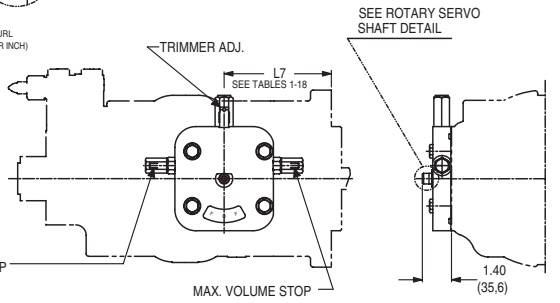


FIGURE -2

| -B- CONTROL MTG. POSITION | | | | | |
|---|---|---|---|---|---|
| CONTROL SPRING OFF-SET TO MIN, VOLUME | | | | | |
| CONTROL OPTION | FIG. | PUMP ROT. | ROTARY SERVO INPUT SHAFT ROTATION | PORT "A" | PORT "B" |
| "4A*" | 1 | CW | CCW | INLET | OUTLET |
| | 1 | CCW | CW | INLET | OUTLET |
| | 1 | CW | CW | OUTLET | INLET |
| | 1 | CCW | CCW | OUTLET | INLET |

| -A- CONTROL MTG. POSITION | | | | | |
|---|---|---|---|---|---|
| CONTROL SPRING OFF-SET TO MIN, VOLUME | | | | | |
| CONTROL OPTION | FIG. | PUMP ROT. | ROTARY SERVO INPUT SHAFT ROTATION | PORT "A" | PORT "B" |
| "4A*" | 2 | CW | CW | INLET | OUTLET |
| | 2 | CCW | CCW | INLET | OUTLET |
| | 2 | CW | CCW | OUTLET | INLET |
| | 2 | CCW | CW | OUTLET | INLET |

| -B- CONTROL MTG. POSITION | | | | | |
|---|---|---|---|---|---|
| CONTROL OPTION | FIG. | PUMP ROT. | IINDICATOR ROTATION | PORT "A" | PORT "B" |
| "7D*" | 1 | CW | CCW | INLET | OUTLET |
| | 1 | CCW | CW | INLET | OUTLET |
| | 1 | CW | CW | OUTLET | INLET |
| | 1 | CCW | CCW | OUTLET | INLET |

| SERIES SIZE | L7 | L8 | L9 |
|---|---|---|---|
| 6, 7 & 8 (SAE 127-2) | 5.15 (130,9) | 9.43 (239,6) | 5.63 (143,1) |
| 6, 7 & 8 (SAE 152-4) | 6.49 (164,8) | | |
| 11 & 14 | 6.38 (162,0) | 10.00 (254,1) | 6.20 (157,5) |
| 24 & 30 | 8.14 (206,7) | 11.87 (301,5) | 8.07 (205,0) |

| -A- CONTROL MTG. POSITION | | | | | |
|---|---|---|---|---|---|
| CONTROL OPTION | FIG. | PUMP ROT. | IINDICATOR ROTATION | PORT "A" | PORT "B" |
| "7D*" | 2 | CW | CW | INLET | OUTLET |
| | 2 | CCW | CCW | INLET | OUTLET |
| | 2 | CW | CCW | OUTLET | INLET |
| | 2 | CCW | CW | OUTLET | INLET |

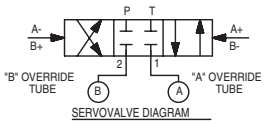

SERVOVALVE DIAGRAM

| PUMP ROT. | CAM | SERVOVALVE COIL POLARITY | SERVOVALVE PORTING | PORT "A" | PORT "B" |
|---|---|---|---|---|---|
| CW | ABOVE | A+ or B- | P---2 ► | OUTLET | INLET |
| CW | BELOW | A- or B+ | P---1 ► | INLET | OUTLET |
| CCW | BELOW | A+ or B- | P---2 ► | OUTLET | INLET |
| CCW | ABOVE | A- or B+ | P---1 ► | INLET | OUTLET |

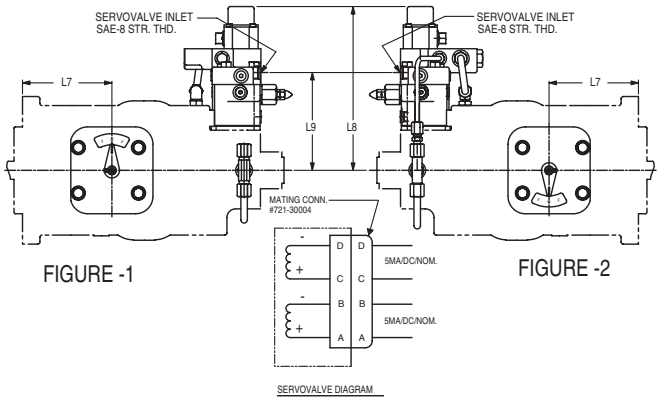

FIGURE -1

FIGURE -2

SERVOVALVE DIAGRAM

| -B- CONTROL MTG. POSITION | | | | | | |
|---|---|---|---|---|---|---|
| CONTROL OPTION | FIG. | PUMP ROT. | VALVE COMMAND D TO E | VOL. INDICATOR SHAFT ROT. (SHOWN) | PORT "A" | PORT "B" |
| "7J*" | 1 | CW | 0...-10V | CCW | INLET | OUTLET |
| | 1 | CCW | 0...-10V | CW | INLET | OUTLET |
| | 1 | CW | 0...+10V | CW | OUTLET | INLET |
| | 1 | CCW | 0...+10V | CCW | OUTLET | INLET |

| | L7 | L8 | L9 | L10 |
|---|---|---|---|---|
| 6, 7 & 8 (SAE 127-2) | 5.15 (130,8) | 12.71 (322,8) | 5.63 (143,0) | 7.65 (194,4) |
| 6, 7 & 8 (SAE 152-4) | 6.49 (164,8) | | | |
| 11 & 14 | 6.38 (162,0) | 13.28 (337,3) | 6.20 (157,4) | |
| 24 & 30 | 8.14 (206,7) | 14.59 (370,6) | 7.51 (190,8) | |

| -A- CONTROL MTG. POSITION | | | | | | |
|---|---|---|---|---|---|---|
| CONTROL OPTION | FIG. | PUMP ROT. | VALVE COMMAND D TO E | VOL. INDICATOR SHAFT ROT. (SHOWN) | PORT "A" | PORT "B" |
| "7J*" | 2 | CW | 0...-10V | CW | INLET | OUTLET |
| | 2 | CCW | 0...-10V | CCW | INLET | OUTLET |
| | 2 | CW | 0...+10V | CCW | OUTLET | INLET |
| | 2 | CCW | 0...+10V | CW | OUTLET | INLET |

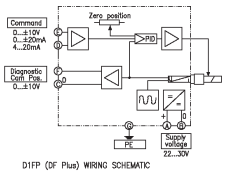


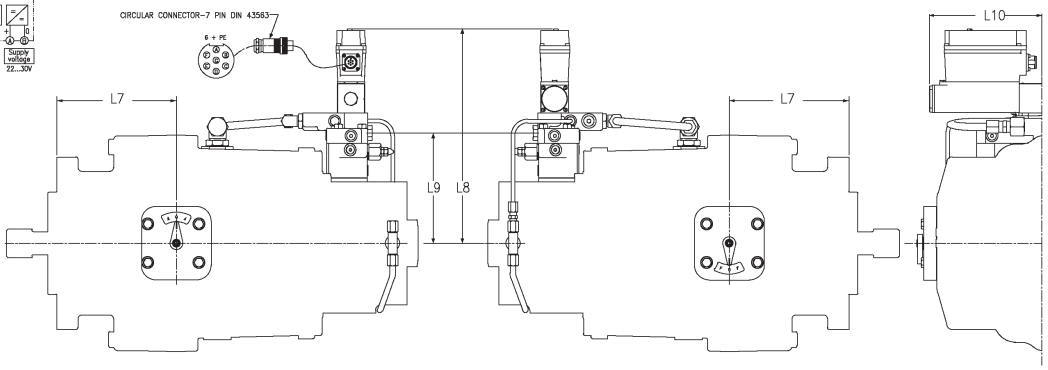

FIGURE 1

FIGURE 2



Tel: +45 63 12 83 00 | Email: ps@hymatik.com | www.hymatik.com | Hvidkaervej 27a, DK-5250 Odense SV, Denmark

| -B- CONTROL MTG. POSITION | | | | | |
|---|---|---|---|---|---|
| CONTROL OPTION | FIG. | PUMP ROT. | ROTARY SERVO INPUT SHAFT ROTATION | PORT "A" | PORT "B" |
| "7F*" | 1 | CW | CCW | INLET | OUTLET |
| | 1 | CCW | CW | INLET | OUTLET |
| | 1 | CW | CW | OUTLET | INLET |
| | 1 | CCW | CCW | OUTLET | INLET |

| SERIES SIZE | L7 | L8 | L9 |
|---|---|---|---|
| 6, 7 & 8 (SAE 127-2) | 5.15 (130,9) | 9.43 (239,6) | 5.63 (143,1) |
| 6, 7 & 8 (SAE 152-4) | 6.49 (164,8) | | |
| 11 & 14 | 6.38 (162,0) | 10.00 (254,1) | 6.20 (157,5) |
| 24 & 30 | 8.14 (206,7) | 11.87 (301,5) | 8.07 (205,0) |

| -A- CONTROL MTG. POSITION | | | | | |
|---|---|---|---|---|---|
| CONTROL OPTION | FIG. | PUMP ROT. | ROTARY SERVO INPUT SHAFT ROTATION | PORT "A" | PORT "B" |
| "7F*" | 2 | CW | CW | INLET | OUTLET |
| | 2 | CCW | CCW | INLET | OUTLET |
| | 2 | CW | CCW | OUTLET | INLET |
| | 2 | CCW | CW | OUTLET | INLET |

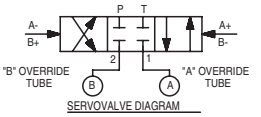

SERVOVALVE DIAGRAM

| PUMP ROT. | CAM | SERVOVALVE COIL POLARITY | SERVOVALVE PORTING | PORT "A" | PORT "B" |
|---|---|---|---|---|---|
| CW | ABOVE | A+ or B- | P---2 ► | OUTLET | INLET |
| CW | BELOW | A- or B+ | P---1 ► | INLET | OUTLET |
| CCW | BELOW | A+ or B- | P---2 ► | OUTLET | INLET |
| CCW | ABOVE | A- or B+ | P---1 ► | INLET | OUTLET |

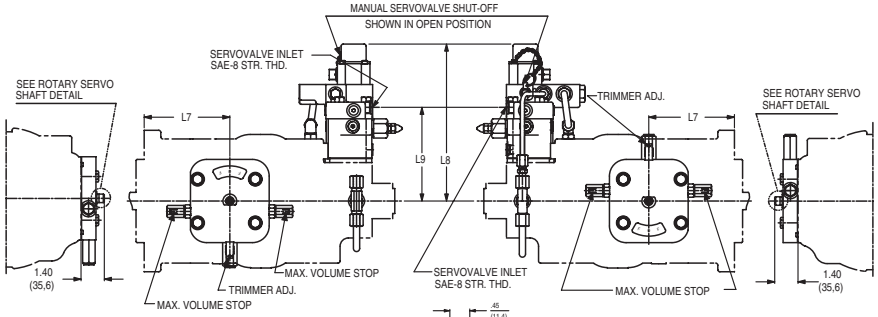

FIGURE -1

FIGURE -2

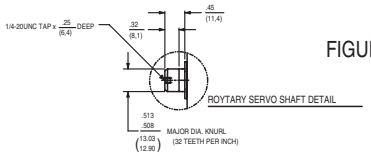


| -B- CONTROL MTG. POSITION | | | | | | |
|---|---|---|---|---|---|---|
| CONTROL OPTION | FIG. | PUMP ROT. | VALVE COMMAND D TO E | CONTROL INPUT SHAFT ROT. (SHOWN) | PORT "A" | PORT "B" |
| "7K*" | 1 | CW | 0...-10V | CCW | INLET | OUTLET |
| | 1 | CCW | 0...-10V | CW | INLET | OUTLET |
| | 1 | CW | 0...+10V | CW | OUTLET | INLET |
| | 1 | CCW | 0...+10V | CCW | OUTLET | INLET |

| | L7 | L8 | L9 | L10 |
|---|---|---|---|---|
| 6, 7 & 8 (SAE 127-2) | 5.15 (130,8) | 12.71 (322,8) | 5.63 (143,0) | 7.65 (194,4) |
| 6, 7 & 8 (SAE 152-4) | 6.49 (164,8) | | | |
| 11 & 14 | 6.38 (162,0) | 13.28 (337,3) | 6.20 (157,4) | |
| 24 & 30 | 8.14 (206,7) | 14.59 (370,6) | 7.51 (190,8) | |

| -A- CONTROL MTG. POSITION | | | | | | |
|---|---|---|---|---|---|---|
| CONTROL OPTION | FIG. | PUMP ROT. | VALVE COMMAND D TO E | CONTROL INPUT SHAFT ROT. (SHOWN) | PORT "A" | PORT "B" |
| "7K*" | 2 | CW | 0...-10V | CW | INLET | OUTLET |
| | 2 | CCW | 0...-10V | CCW | INLET | OUTLET |
| | 2 | CW | 0...+10V | CCW | OUTLET | INLET |
| | 2 | CCW | 0...+10V | CW | OUTLET | INLET |

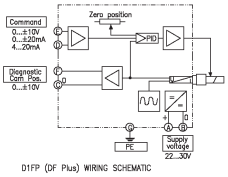

D1FP (DF Plus) WIRING SCHEMATIC

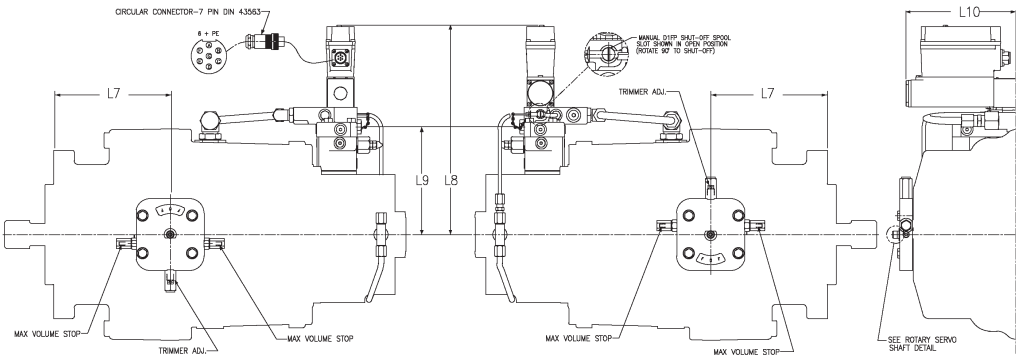

FIGURE 1

FIGURE 2



**Parker Hannifin Corporation**
Hydraulic Pump and Power Systems Division
United States

Tel: +45 63 12 83 00 | Email: ps@hymatik.com | www.hymatik.com | Hvidkaervej 27a, DK-5250 Odense SV, Denmark

| -B- CONTROL MTG. POSITION | | | | | | |
|---|---|---|---|---|---|---|
| CONTROL OPTION | FIG. | PUMP ROT | COMMAND SIG. D TO E | VOL. INDICATOR SHAFT ROT. (SHOWN) | PORT "A" | PORT "B" |
| "7Q*" | 1 | CW | 0...-10V | CCW | INLET | OUTLET |
| | 1 | CCW | 0...-10V | CW | INLET | OUTLET |
| | 1 | CW | 0...-10V | CW | OUTLET | INLET |
| | 1 | CCW | 0...-10V | CCW | OUTLET | INLET |

| | L7 | L8 | L9 | L10 |
|---|---|---|---|---|
| 6, 7 & 8 (SAE 127-2) | 5.15 (130,8) | 12.82 (325,6) | 5.63 (143,0) | 6.54 (166,0) |
| 6, 7 & 8 (SAE 152-4) | 6.49 (164,8) | | | |
| 11 & 14 | 6.38 (162,0) | 13.28 (337,3) | 6.20 (157,4) | |
| 24 & 30 | 8.14 (206,7) | 14.70 (373,4) | 7.51 (190,8) | |

| -A- CONTROL MTG. POSITION | | | | | | |
|---|---|---|---|---|---|---|
| CONTROL OPTION | FIG. | PUMP ROT | COMMAND SIG. D TO E | VOL. INDICATOR SHAFT ROT. (SHOWN) | PORT "A" | PORT "B" |
| "7Q" | 2 | CW | 0...+10V | CW | INLET | OUTLET |
| | 2 | CCW | 0...+10V | CCW | INLET | OUTLET |
| | 2 | CW | 0...+10V | CCW | OUTLET | INLET |
| | 2 | CCW | 0..+10V | CW | OUTLET | INLET |

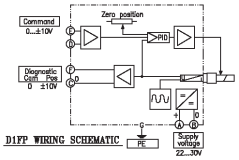


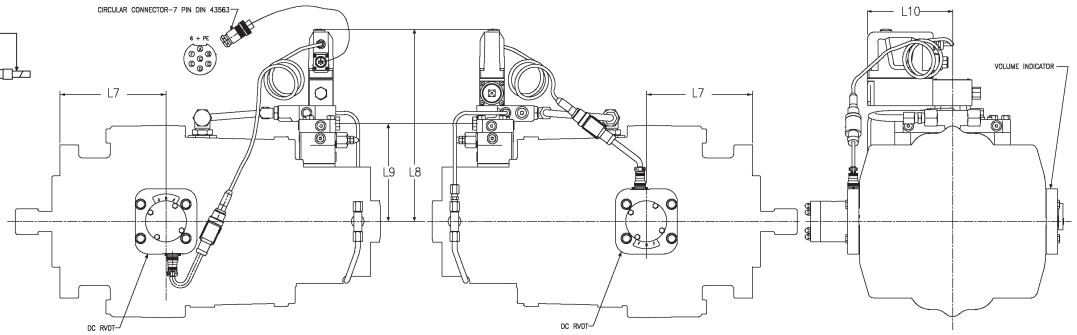


FIGURE 1




FIGURE 2

| -B- CONTROL MTG. POSITION | | | | | | |
|---|---|---|---|---|---|---|
| CONTROL OPTION | FIG. | PUMP ROT | COMMAND SIG. D TO E | CONTROL INPUT SHAFT ROT. (SHOWN) | PORT "A" | PORT "B" |
| "7R*" | 1 | CW | 0...-10V | CCW | INLET | OUTLET |
| | 1 | CCW | 0...-10V | CW | INLET | OUTLET |
| | 1 | CW | 0...+10V | CW | OUTLET | INLET |
| | 1 | CCW | 0...+10V | CCW | OUTLET | INLET |

| | L7 | L8 | L9 | L10 |
|---|---|---|---|---|
| 6, 7 & 8 (SAE 127-2) | 5.15 (130,8) | 12.82 (325,6) | 5.63 (143,0) | 6.54 (166,0) |
| 6, 7 & 8 (SAE 152-4) | 6.49 (164,8) | | | |
| 11 & 14 | 6.38 (162,0) | 13.28 (340,1) | 6.20 (157,4) | |
| 24 & 30 | 8.14 (206,7) | 14.70 (373,4) | 7.51 (190,8) | |

| -A- CONTROL MTG. POSITION | | | | | | |
|---|---|---|---|---|---|---|
| CONTROL OPTION | FIG. | PUMP ROT | COMMAND SIG. D TO E | CONTROL INPUT SHAFT ROT. (SHOWN) | PORT "A" | PORT "B" |
| "7R" | 2 | CW | 0...-10V | CW | INLET | OUTLET |
| | 2 | CCW | 0...-10V | CCW | INLET | OUTLET |
| | 2 | CW | 0...+10V | CCW | OUTLET | INLET |
| | 2 | CCW | 0..+10V | CW | OUTLET | INLET |

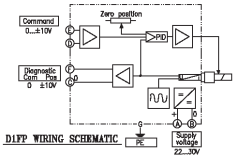


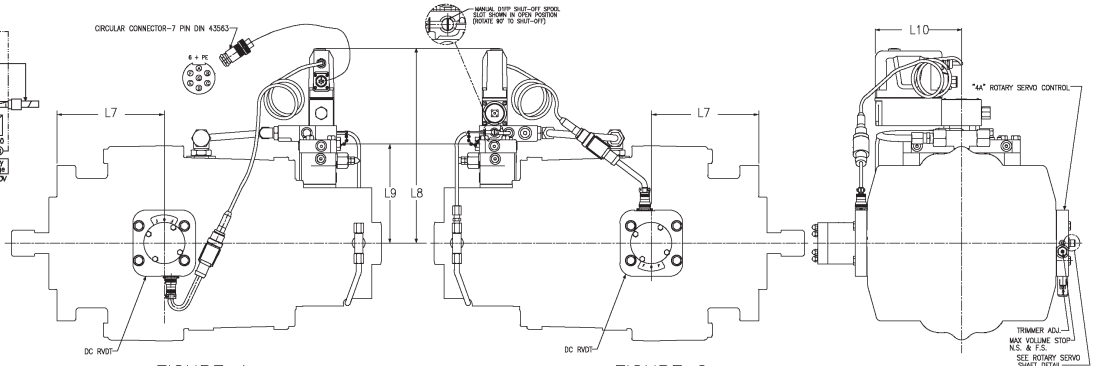


FIGURE 1




FIGURE 2



Tel: +45 63 12 83 00 | Email: ps@hymatik.com | www.hymatik.com | Hvidkaervej 27a, DK-5250 Odense SV, Denmark

| -B- CONTROL MTG. POSITION | | | | | | |
|---|---|---|---|---|---|---|
| CONTROL SPRING OFF-SET TO MIN, VOLUME | | | | | | |
| CONTROL OPTION | FIG. | PUMP ROT. | PRESSURE SIGNAL TO SAE-4 STR. THD. PORT: | ROTARY SERVO INPUT SHAFT ROTATION | PORT "A" | PORT "B" |
| "8A*" | 1 | CW | "P1" | CCW | INLET | OUTLET |
| | 1 | CCW | "P2" | CW | INLET | OUTLET |
| | 1 | CW | "P2" | CW | OUTLET | INLET |
| | 1 | CCW | "P1" | CCW | OUTLET | INLET |

| -A- CONTROL MTG. POSITION | | | | | | |
|---|---|---|---|---|---|---|
| CONTROL SPRING OFF-SET TO MIN, VOLUME | | | | | | |
| CONTROL OPTION | FIG. | PUMP ROT. | PRESSURE SIGNAL TO SAE-4 STR. THD. PORT: | ROTARY SERVO INPUT SHAFT ROTATION | PORT "A" | PORT "B" |
| "8A*" | 2 | CW | "P2" | CW | INLET | OUTLET |
| | 2 | CCW | "P1" | CCW | INLET | OUTLET |
| | 2 | CW | "P1" | CCW | OUTLET | INLET |
| | 2 | CCW | "P2" | CW | OUTLET | INLET |

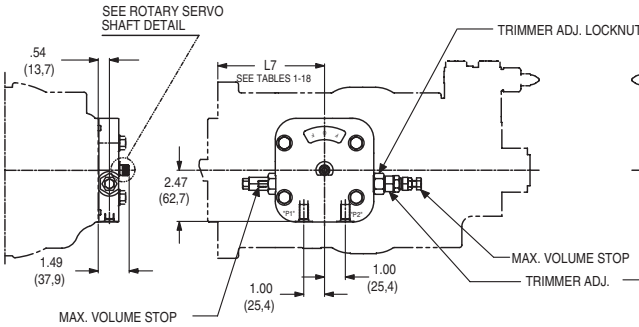


FIGURE -1

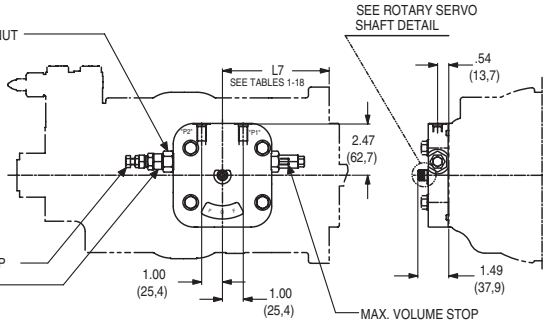


FIGURE -2

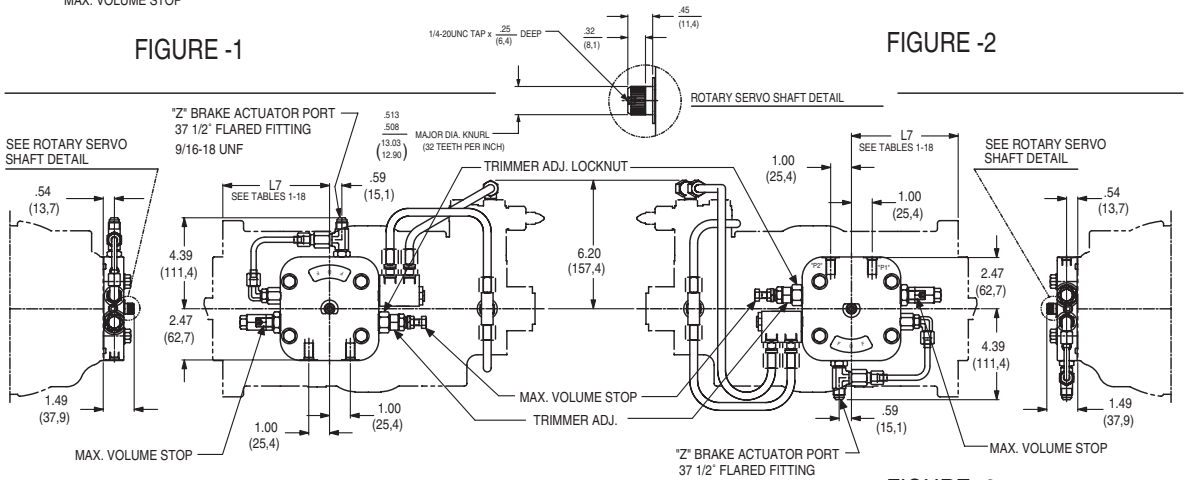


FIGURE -1

FIGURE -2

| -B- CONTROL MTG. POSITION | | | | | | |
|---|---|---|---|---|---|---|
| CONTROL SPRING OFF-SET TO MIN, VOLUME | | | | | | |
| CONTROL OPTION | FIG. | PUMP ROT. | PRESSURE SIGNAL TO SAE-4 STR. THD. PORT: | ROTARY SERVO INPUT SHAFT ROTATION | PORT "A" | PORT "B" |
| "8C*" | 1 | CW | "P1" | CCW | INLET | OUTLET |
| | 1 | CCW | "P2" | CW | INLET | OUTLET |
| | 1 | CW | "P2" | CW | OUTLET | INLET |
| | 1 | CCW | "P1" | CCW | OUTLET | INLET |

| -A- CONTROL MTG. POSITION | | | | | | |
|---|---|---|---|---|---|---|
| CONTROL SPRING OFF-SET TO MIN, VOLUME | | | | | | |
| CONTROL OPTION | FIG. | PUMP ROT. | PRESSURE SIGNAL TO SAE-4 STR. THD. PORT: | ROTARY SERVO INPUT SHAFT ROTATION | PORT "A" | PORT "B" |
| "8C*" | 2 | CW | "P2" | CW | INLET | OUTLET |
| | 2 | CCW | "P1" | CCW | INLET | OUTLET |
| | 2 | CW | "P1" | CCW | OUTLET | INLET |
| | 2 | CCW | "P2" | CW | OUTLET | INLET |



Parker Hannifin Corporation
Hydraulic Pump and Power Systems Division
United States

Tel: +45 63 12 83 00 | Email: ps@hymatik.com | www.hymatik.com | Hvidkaervej 27a, DK-5250 Odense SV, Denmark

| -B- CONTROL MTG. POSITION | | | | | | |
|---|---|---|---|---|---|---|
| CONTROL OPTION | FIG. | PUMP ROT. | ENERGIZE SOLENOID | MANUAL OVERRIDE SHAFT ROTATION | PORT "A" | PORT "B" |
| "9A*" | 1 | CW | "A" | CCW | INLET | OUTLET |
| | 1 | CCW | "B" | CW | INLET | OUTLET |
| | 1 | CW | "B" | CW | OUTLET | INLET |
| | 1 | CCW | "A" | CCW | OUTLET | INLET |

| -A- CONTROL MTG. POSITION | | | | | | |
|---|---|---|---|---|---|---|
| CONTROL OPTION | FIG. | PUMP ROT. | ENERGIZE SOLENOID | MANUAL OVERRIDE SHAFT ROTATION | PORT "A" | PORT "B" |
| "9A*" | 2 | CW | "B" | CW | INLET | OUTLET |
| | 2 | CCW | "A" | CCW | INLET | OUTLET |
| | 2 | CW | "A" | CCW | OUTLET | INLET |
| | 2 | CCW | "B" | CW | OUTLET | INLET |

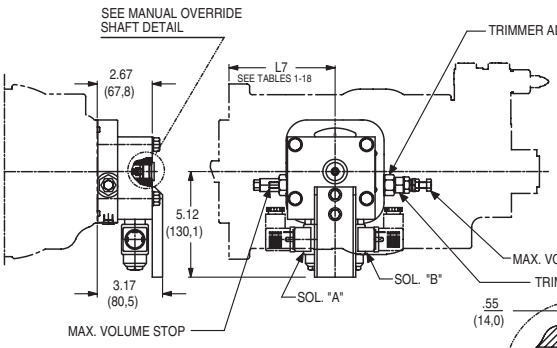


FIGURE -1

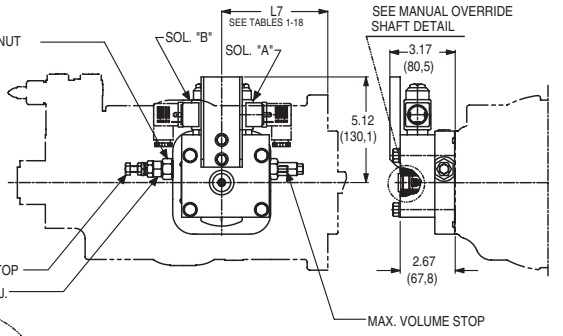


FIGURE -2

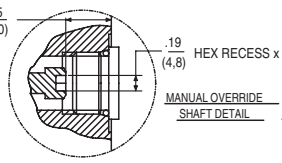


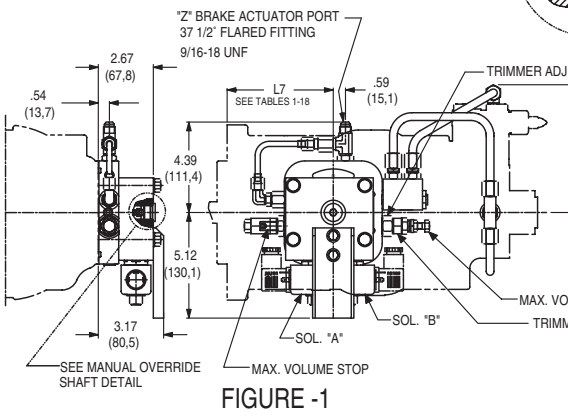


FIGURE -1

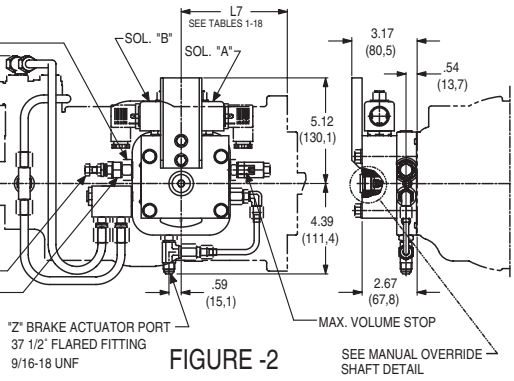


FIGURE -2

| -B- CONTROL MTG. POSITION | | | | | | |
|---|---|---|---|---|---|---|
| CONTROL OPTION | FIG. | PUMP ROT. | ENERGIZE SOLENOID | MANUAL OVERRIDE SHAFT ROTATION | PORT "A" | PORT "B" |
| "9C*" | 1 | CW | "A" | CCW | INLET | OUTLET |
| | 1 | CCW | "B" | CW | INLET | OUTLET |
| | 1 | CW | "B" | CW | OUTLET | INLET |
| | 1 | CCW | "A" | CCW | OUTLET | INLET |

| -A- CONTROL MTG. POSITION | | | | | | |
|---|---|---|---|---|---|---|
| CONTROL OPTION | FIG. | PUMP ROT. | ENERGIZE SOLENOID | MANUAL OVERRIDE SHAFT ROTATION | PORT "A" | PORT "B" |
| "9C*" | 2 | CW | "B" | CW | INLET | OUTLET |
| | 2 | CCW | "A" | CCW | INLET | OUTLET |
| | 2 | CW | "A" | CCW | OUTLET | INLET |
| | 2 | CCW | "B" | CW | OUTLET | INLET |



Tel: +45 63 12 83 00 | Email: ps@hymatik.com | www.hymatik.com | Hvidkaervej 27a, DK-5250 Odense SV, Denmark

| -B- CONTROL MTG. POSITION | | | | | |
|---|---|---|---|---|---|
| CONTROL SPRING OFF-SET TO FULL VOLUME | | | | | |
| CONTROL OPTION | FIG. | MOTOR ROT. | PRESSURE SIGNAL TO: 1/8-27 N.P.T.F. PORT "X" | PRESSURE SIGNAL TO: 1/8-27 N.P.T.F. PORT "Y" | PORT "A" |
| "2A*" | 1 | CW | REDUCED SPEED | FULL SPEED | INLET |
| | 1 | CCW | | | OUTLET |

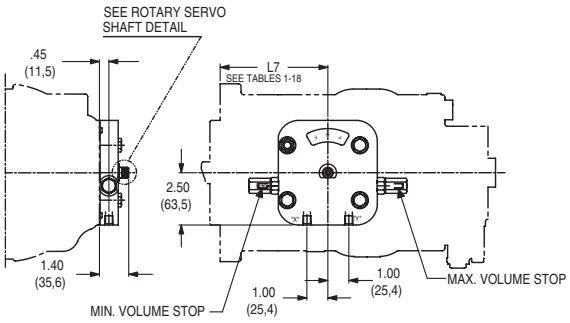


FIGURE -1

| -A- CONTROL MTG. POSITION | | | | | |
|---|---|---|---|---|---|
| CONTROL SPRING OFF-SET TO FULL VOLUME | | | | | |
| CONTROL OPTION | FIG. | MOTOR ROT. | PRESSURE SIGNAL TO: 1/8-27 N.P.T.F. PORT "X" | PRESSURE SIGNAL TO: 1/8-27 N.P.T.F. PORT "Y" | PORT "A" |
| "2A*" | 2 | CW | FULL SPEED | REDUCED SPEED | INLET |
| | 2 | CCW | | | OUTLET |

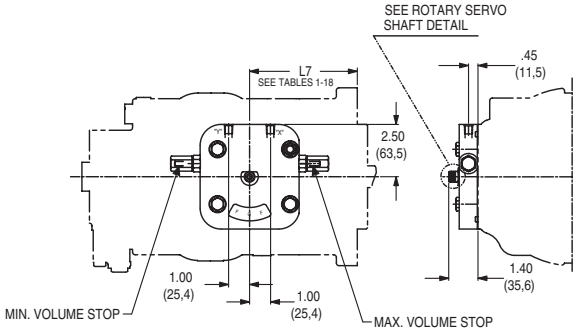


FIGURE -2

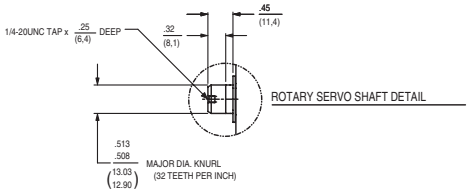




Parker Hannifin Corporation
Hydraulic Pump and Power Systems Division
United States

Tel: +45 63 12 83 00 | Email: ps@hymatik.com | www.hymatik.com | Hvidkaervej 27a, DK-5250 Odense SV, Denmark

| -B- CONTROL MTG. POSITION | | | | | | |
|---|---|---|---|---|---|---|
| CONTROL SPRING OFF-SET TO FULL VOLUME | | | | | | |
| CONTROL OPTION | FIG. | MOTOR ROT. | PRESSURE SIGNAL TO SAE-4 STR. THD. PORT P2 | ROTARY SERVO INPUT SHAFT ROTATION | PORT "A" | PORT "B" |
| "8A*" | 1 | CW | FULL SPEED | CW | INLET | OUTLET |
| | 1 | CCW | | CW | OUTLET | INLET |

| -A- CONTROL MTG. POSITION | | | | | | |
|---|---|---|---|---|---|---|
| CONTROL SPRING OFF-SET TO FULL VOLUME | | | | | | |
| CONTROL OPTION | FIG. | MOTOR ROT. | PRESSURE SIGNAL TO SAE-4 STR. THD. PORT P1 | ROTARY SERVO INPUT SHAFT ROTATION | PORT "A" | PORT "B" |
| "8A*" | 2 | CW | FULL SPEED | CCW | INLET | OUTLET |
| | 2 | CCW | | CCW | OUTLET | INLET |

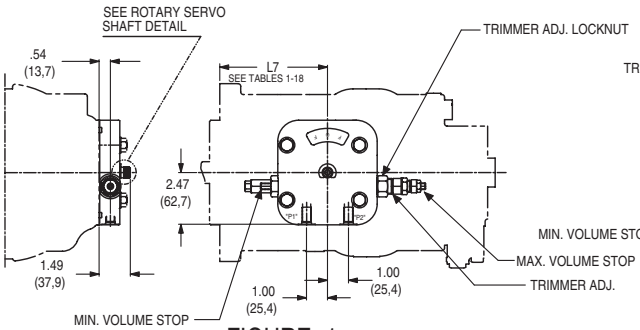


FIGURE -1

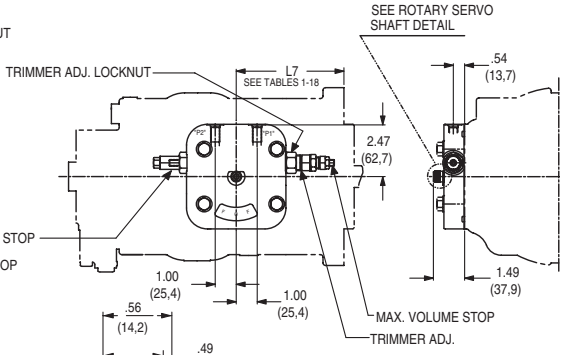


FIGURE -2

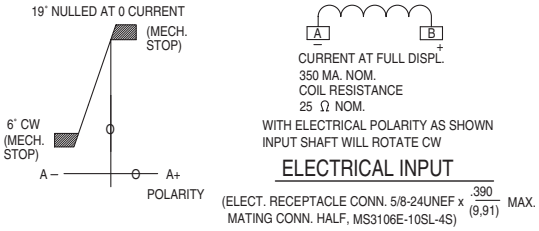


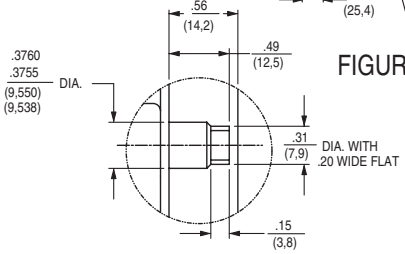


MANUAL OVERRIDE DETAIL
SERVO MUST BE DISCONNECTED

| -B- CONTROL MTG. POSITION | | | | | | |
|---|---|---|---|---|---|---|
| CONTROL SPRING OFF-SET TO FULL VOLUME | | | | | | |
| CONTROL OPTION | FIG. | MOTOR ROT. | ENERGIZE SOLENOID | MANUAL OVERRIDE SHAFT ROTATION | PORT "A" | PORT "B" |
| "9A*" | 1 | CW | FULL SPEED | CW | INLET | OUTLET |
| | 1 | CCW | | CW | OUTLET | INLET |

| -A- CONTROL MTG. POSITION | | | | | | |
|---|---|---|---|---|---|---|
| CONTROL SPRING OFF-SET TO FULL VOLUME | | | | | | |
| CONTROL OPTION | FIG. | MOTOR ROT. | ENERGIZE SOLENOID | MANUAL OVERRIDE SHAFT ROTATION | PORT "A" | PORT "B" |
| "9A*" | 2 | CW | FULL SPEED | CCW | INLET | OUTLET |
| | 2 | CCW | | CCW | OUTLET | INLET |

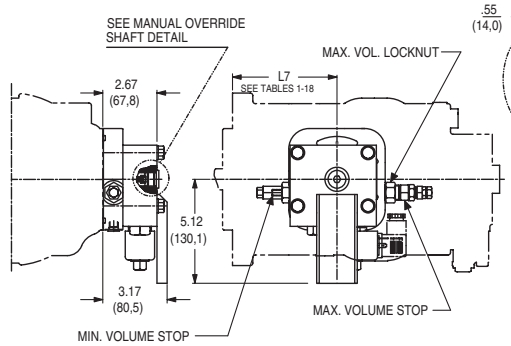


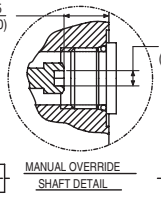


FIGURE -1

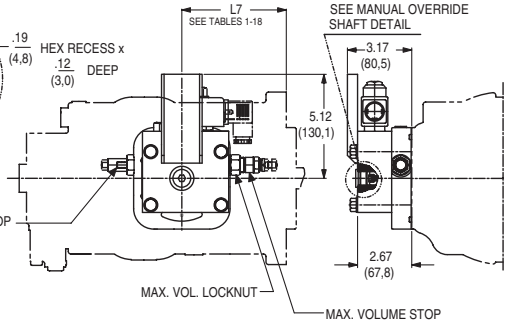


FIGURE -2



Tel: +45 63 12 83 00 | Email: ps@hymatik.com | www.hymatik.com | Hvidkaervej 27a, DK-5250 Odense SV, Denmark

| -A- CONTROL MTG. POSITION | | | | | | |
|---|---|---|---|---|---|---|
| CONTROL OPTION | FIG. | PUMP ROT. | INPUT SHAFT ROTATION | PORT "A" | PORT "B" | TORQUE LIMITER ADJ. |
| "**4" | 3 | CW | CW | INLET | OUTLET | E |
| | 1 | CCW | CCW | INLET | OUTLET | F |
| | 1 | CCW | CW | OUTLET | INLET | E |
| | 3 | CW | CCW | OUTLET | INLET | F |

| SERIES SIZE | L7 | L10 | L11 |
|---|---|---|---|
| 6, 7 & 8 (SAE 127-2) | 5.15 (130,9) | 6.20 (157,4) | 6.48 (164,5) |
| 6, 7 & 8 (SAE 152-4) | 6.49 (164,8) | | |
| 11 & 14 | 6.38 (162,0) | 5.83 (148,0) | 5.83 (148,0) |
| 24 & 30 | 8.14 (206,7) | 7.15 (181,6) | 7.15 (181,6) |

| -B- CONTROL MTG. POSITION | | | | | | |
|---|---|---|---|---|---|---|
| CONTROL OPTION | FIG. | PUMP ROT. | INPUT SHAFT ROTATION | PORT "A" | PORT "B" | TORQUE LIMITER ADJ. |
| "**4" | 4 | CW | CCW | INLET | OUTLET | F |
| | 2 | CCW | CW | INLET | OUTLET | E |
| | 2 | CCW | CCW | OUTLET | INLET | F |
| | 4 | CW | CW | OUTLET | INLET | E |

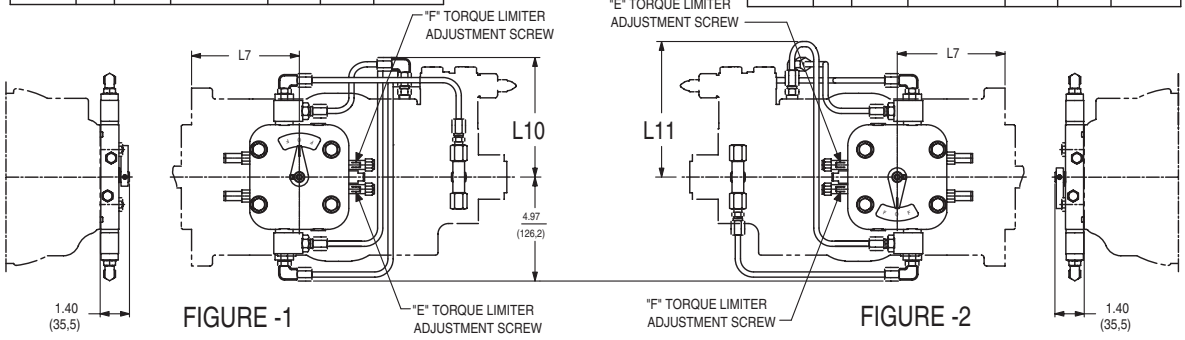


FIGURE -1




FIGURE -2

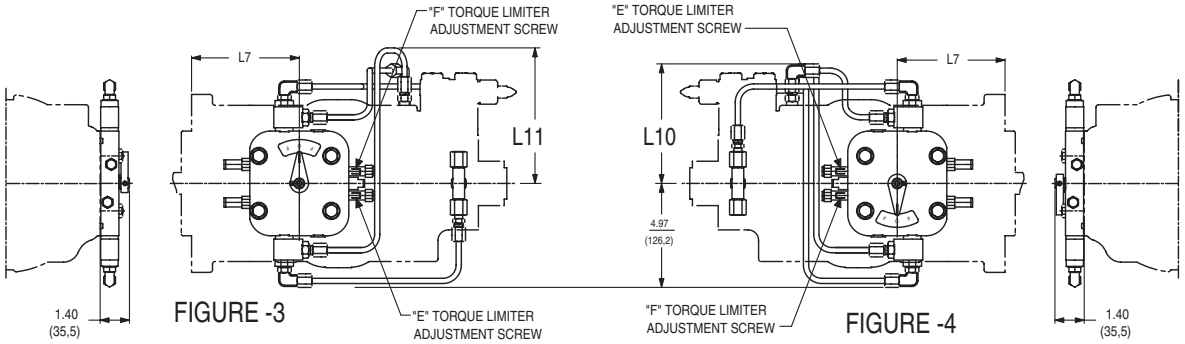


FIGURE -3




FIGURE -4



Parker Hannifin Corporation
Hydraulic Pump and Power Systems Division
United States

| -A- CONTROL MTG. POSITION | | | | | |
|---|---|---|---|---|---|
| CONTROL OPTION | FIG. | PUMP ROT. | INPUT SHAFT ROTATION | PORT "A" | PORT "B" |
| "**6" or "**8" | 2 | CW | CW | INLET | OUTLET |
| | 2 | CCW | CCW | INLET | OUTLET |
| | 2 | CW | CCW | OUTLET | INLET |
| | 2 | CCW | CW | OUTLET | INLET |

| -B- CONTROL MTG. POSITION | | | | | |
|---|---|---|---|---|---|
| CONTROL OPTION | FIG. | PUMP ROT. | INPUT SHAFT ROTATION | PORT "A" | PORT "B" |
| "**6" or "**8" | 1 | CW | CCW | INLET | OUTLET |
| | 1 | CCW | CW | INLET | OUTLET |
| | 1 | CW | CW | OUTLET | INLET |
| | 1 | CCW | CCW | OUTLET | INLET |

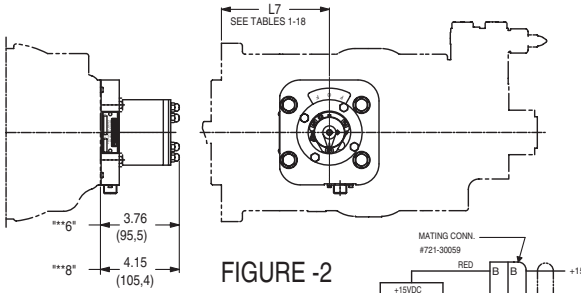


FIGURE -2

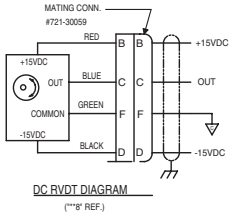


DC RVDT DIAGRAM
("**8" REF.)

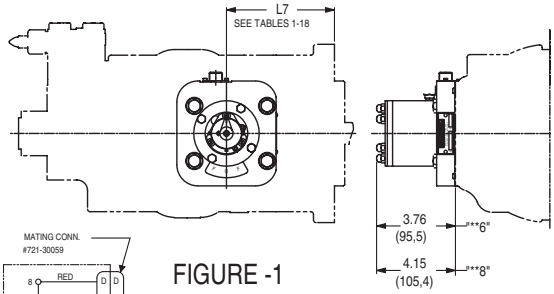


FIGURE -1

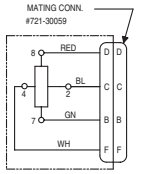


POTENTIOMETER DIAGRAM
("**6" REF.)

| -A- CONTROL MTG. POSITION | | | | | |
|---|---|---|---|---|---|
| CONTROL OPTION | FIG. | PUMP ROT. | INPUT SHAFT ROTATION | PORT "A" | PORT "B" |
| "**2" | 2 | CW | CW | INLET | OUTLET |
| | 2 | CCW | CCW | INLET | OUTLET |
| | 2 | CW | CCW | OUTLET | INLET |
| | 2 | CCW | CW | OUTLET | INLET |

| -B- CONTROL MTG. POSITION | | | | | |
|---|---|---|---|---|---|
| CONTROL OPTION | FIG. | PUMP ROT. | INPUT SHAFT ROTATION | PORT "A" | PORT "B" |
| "**2" | 1 | CW | CCW | INLET | OUTLET |
| | 1 | CCW | CW | INLET | OUTLET |
| | 1 | CW | CW | OUTLET | INLET |
| | 1 | CCW | CCW | OUTLET | INLET |

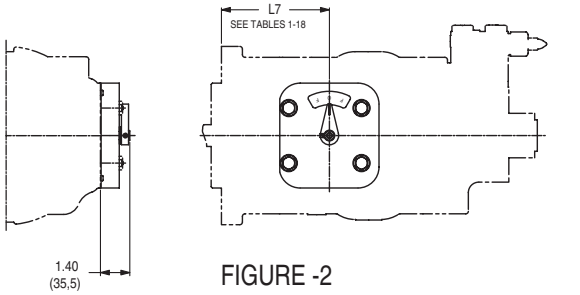


FIGURE -2

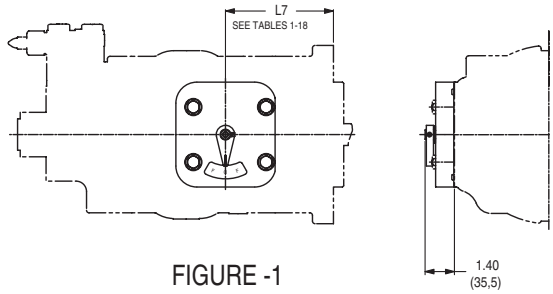


FIGURE -1



Tel: +45 63 12 83 00 | Email: ps@hymatik.com | www.hymatik.com | Hvidkaervej 27a, DK-5250 Odense SV, Denmark

## Control Option **9

| Control – Cam Sensor Hall–Effect Type DC |
|---|
| S23-19427 |

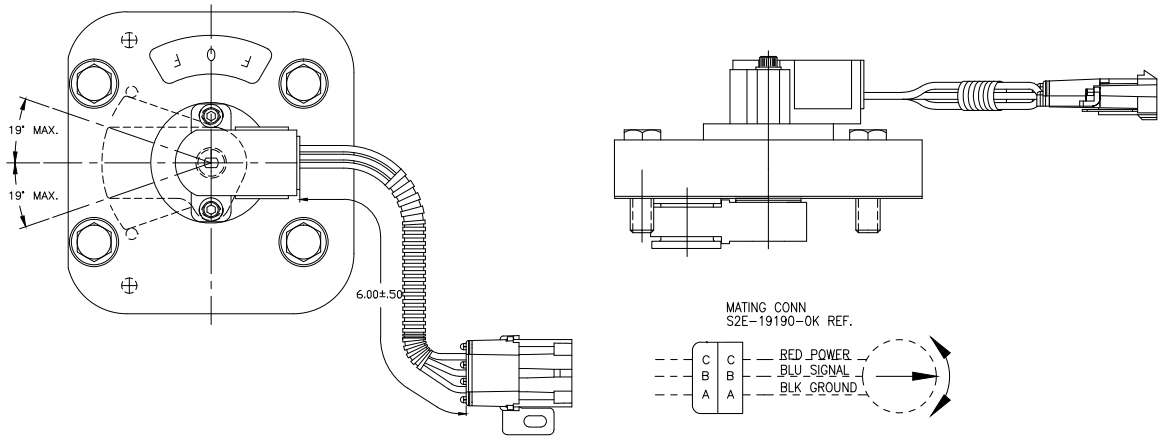


| | |
|---|---|
| **Supply Voltage Input** | +5 VDC |
| **Hall Effect Output** | 2.5VDC +/- 1.8VDC (Center +/- 19o cam angle) |
| **IP Rating** | IP68 |

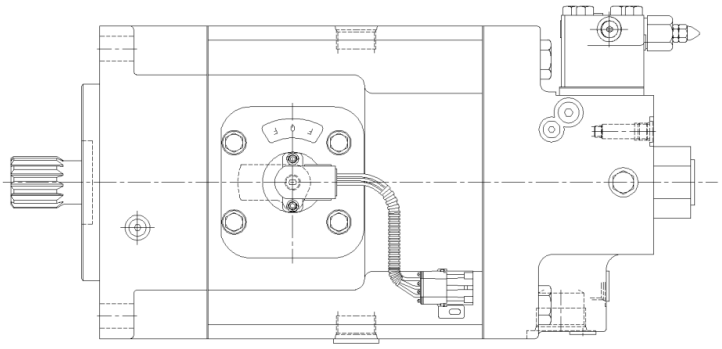

Drawing example shown with primary control on the “A” port side.

| | | SAE Mounting and Coupling | | | | | | | | |
|---|---|---|---|---|---|---|---|---|---|---|
| | Mounting | Blanking Plate | 82-2 (A) | 101-2 (B) | 101-4 (B) | 127-2 (C) | 127-4 (C) | 152-4 (D) | 165-4 (E) | 177-4 (F) |
| | Coupling | None | 16-4 (A) | 22-4 (B) | 22-4 (B) | 32-4 (C) | 32-4 (C) | 44-4 (D) | 44-4 (E) | 50-4 (F) |
| Pumps | P6/7/8 S, X | M | A | B | - | - | - | - | - | - |
| | P6/7/8 R, L , M | M | A | B | - | C | - | - | - | - |
| | P11/14 S, X | M | A | B | - | - | - | - | - | - |
| | P11/14 R, L, M | M | A | B | B | C | C | D | E | |
| | P24/30 S, X | - | - | B | - | C | - | - | - | - |
| | P24/30 R, L, M | M | - | B | B | C | C | D | E | F |
| Motors | M6/7/8 R, L, M, N | M | A | B | - | C | - | - | - | - |
| | M11/14 R, L, M, N | M | A | B | B | C | C | D | E | - |
| | M24/30 R, L, M, N | M | - | B | B | C | C | D | E | F |



Tel: +45 63 12 83 00 | Email: ps@hymatik.com | www.hymatik.com | Hvidkaervej 27a, DK-5250 Odense SV, Denmark

**P6-14 S,X**
**SAE 82-2 (A) WITH COUPLING 16-4**
**SAE 101-2 (B) WITH COUPLING 22-4**

NOTE:
1. REAR AUXILIARY UNIT TO LIMIT COUPLING TRAVEL .28(7.1) MINIMUM FROM MOUNTING FACE ( SAE STD. REF.)

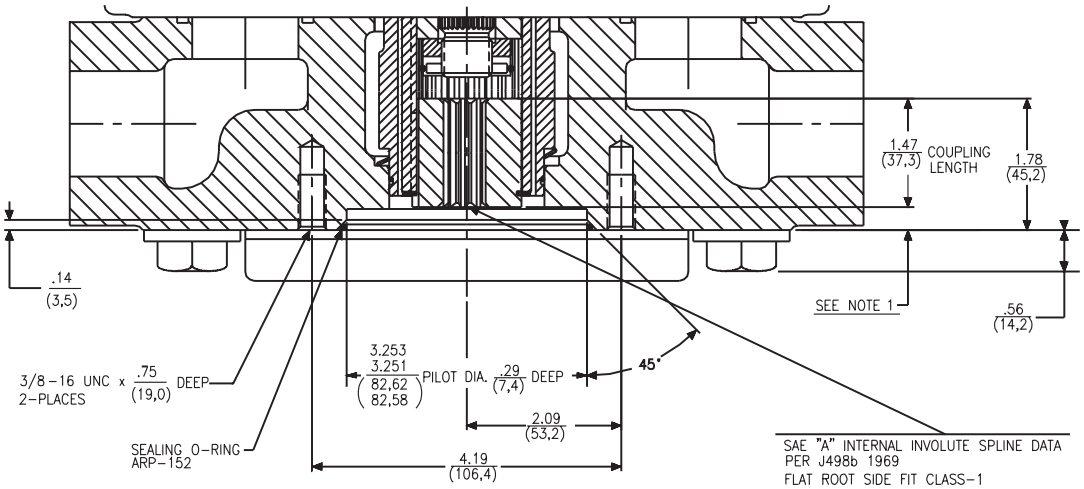


**SAE 82-2 (A)**

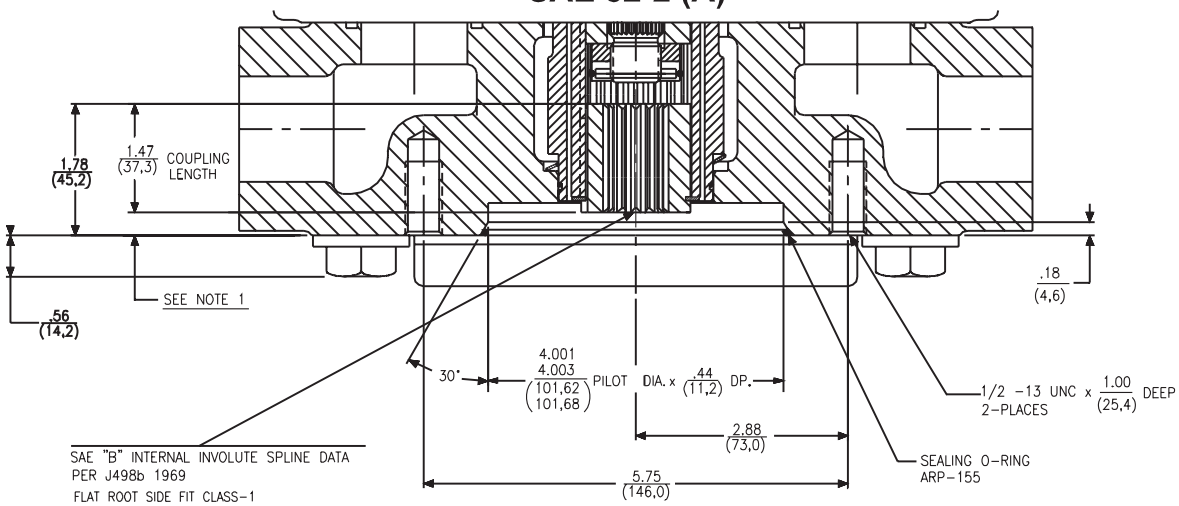


**SAE 101-2 (B)**



Parker Hannifin Corporation
Hydraulic Pump and Power Systems Division
United States

Tel: +45 63 12 83 00 | Email: ps@hymatik.com | www.hymatik.com | Hvidkaervej 27a, DK-5250 Odense SV, Denmark

**M6,7 R,L,M,N**
**P6,7,8 R,L,M**
**SAE 127-2 (C) WITH COUPLING 32-4**
**SAE 101-2 (B) WITH COUPLING 22-4**
**SAE 82-2 (A) WITH COUPLING 16-4**

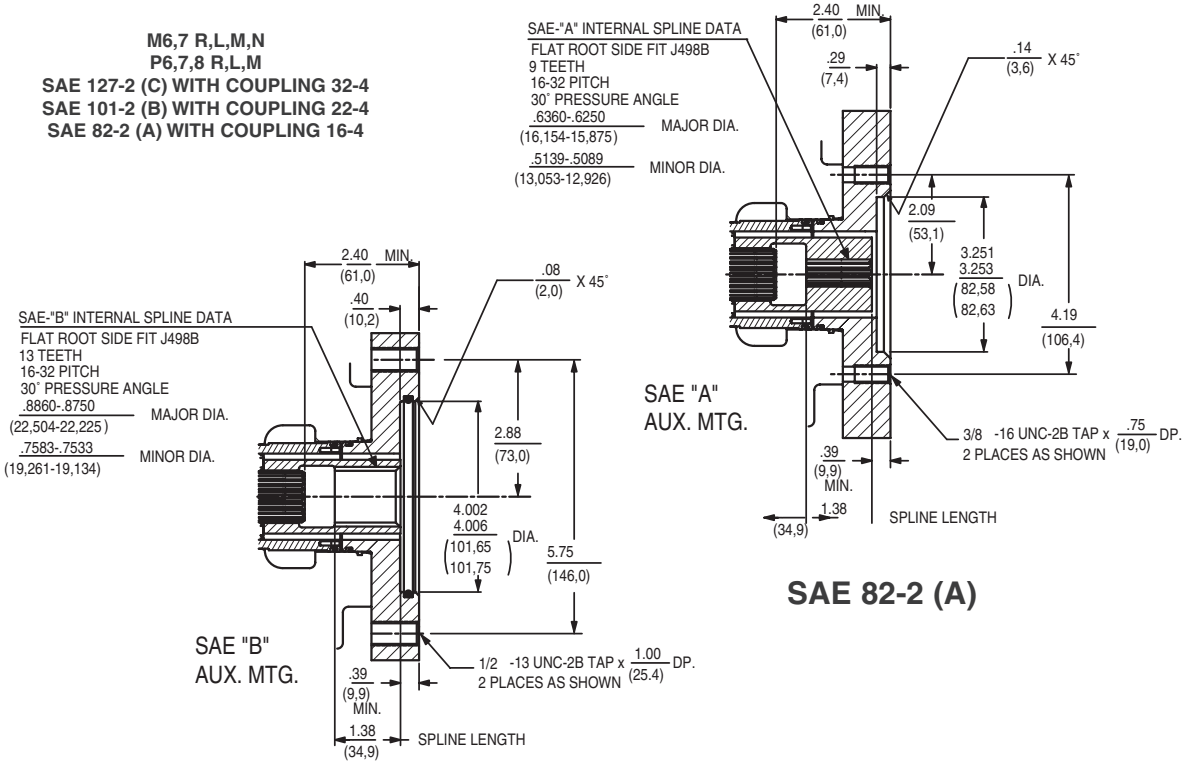


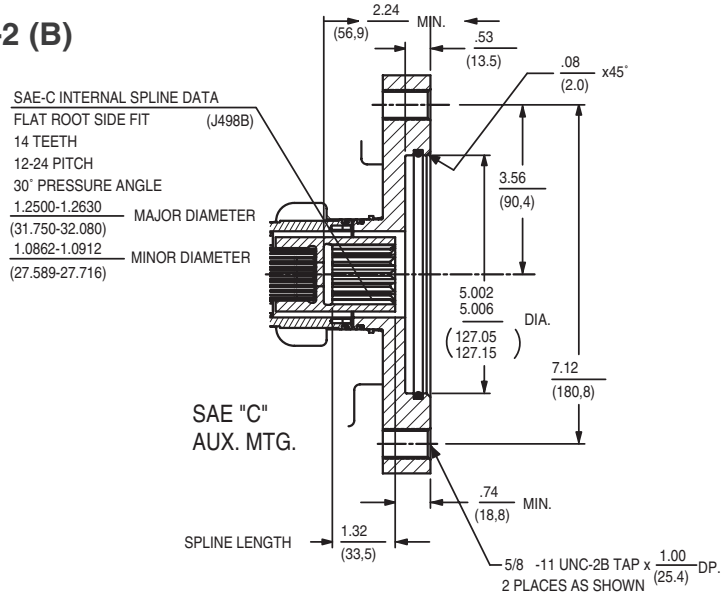




Tel: +45 63 12 83 00 | Email: ps@hymatik.com | www.hymatik.com | Hvidkaervej 27a, DK-5250 Odense SV, Denmark

**M11,14 R,L,M,N**
**P11,14 R,L**
**BLANKING PLATE**

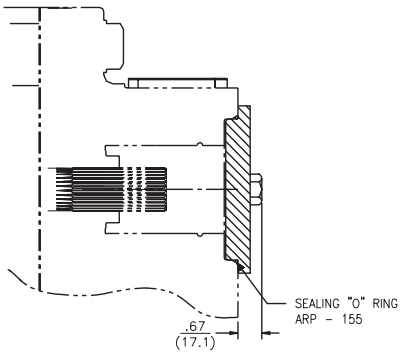


**M11,14 R,L,M,N**
**P11,14 R,L,M**
**SAE 82-2 (A) WITH COUPLING 16-4**

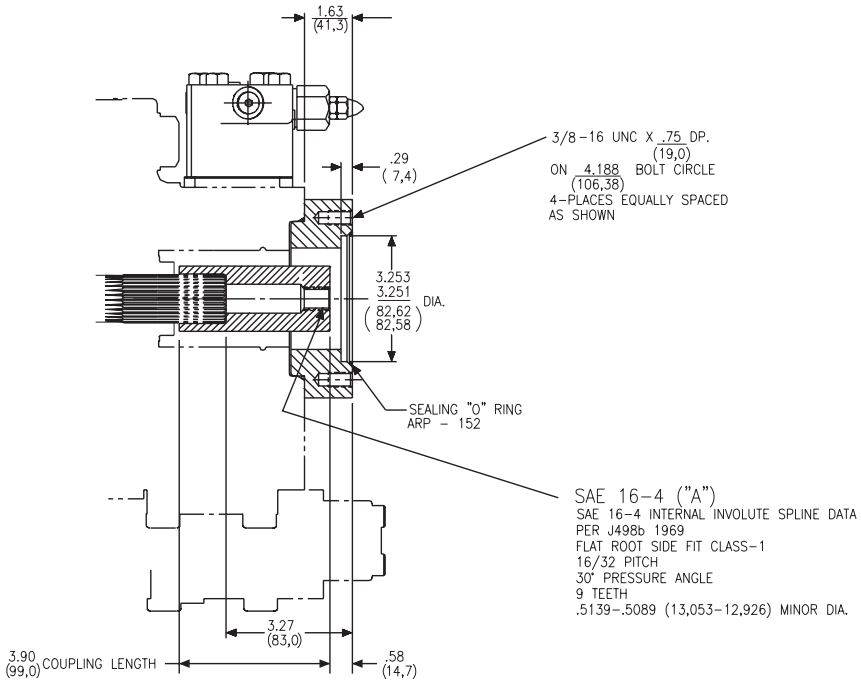




Parker Hannifin Corporation
Hydraulic Pump and Power Systems Division
United States

Tel: +45 63 12 83 00 | Email: ps@hymatik.com | www.hymatik.com | Hvidkaervej 27a, DK-5250 Odense SV, Denmark

**M11,14 R,L,M,N**
**P11,14 R,L,M**
**SAE 101-2 (B) WITH COUPLING 22-4**
**SAE 101-4 (B) WITH COUPLING 22-4**

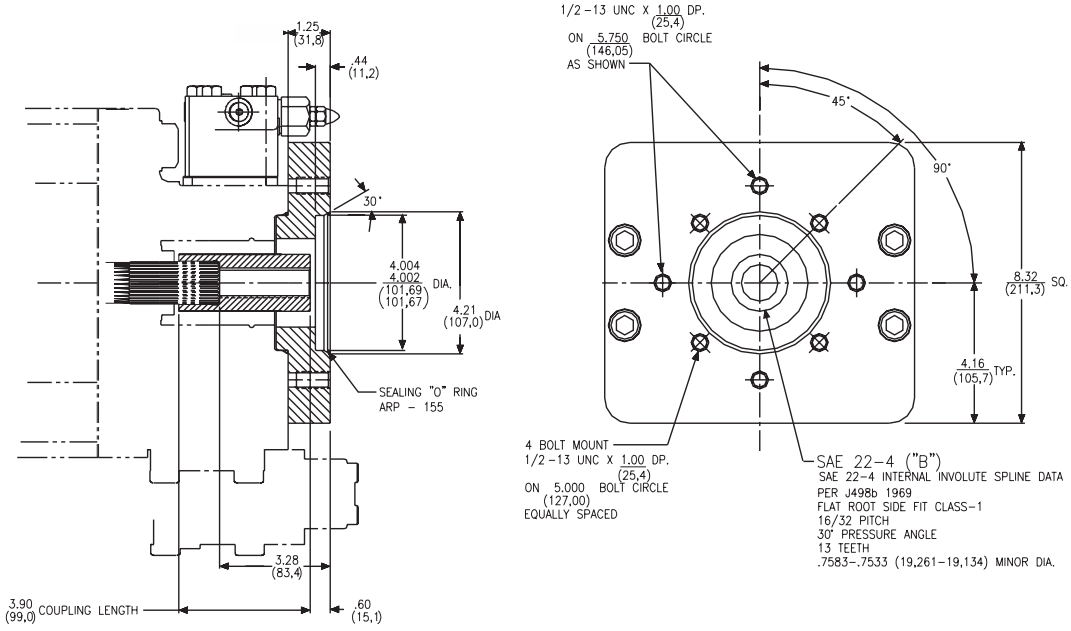


**M11,14 R,L,M,N**
**P11,14 R,L,M**
**SAE 127-2 (C) WITH COUPLING 32-4**
**SAE 127-4 (C) WITH COUPLING 32-4**

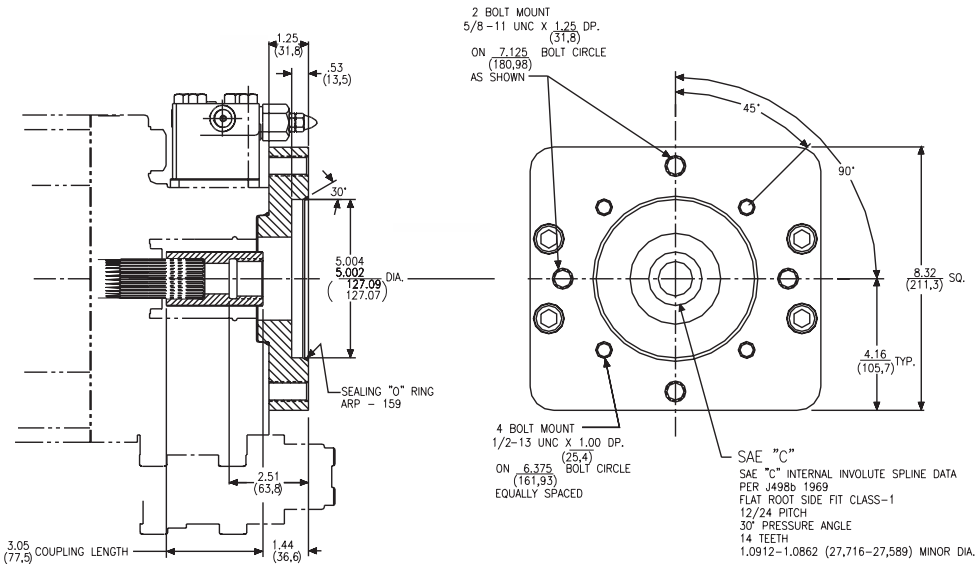




Tel: +45 63 12 83 00 | Email: ps@hymatik.com | www.hymatik.com | Hvidkaervej 27a, DK-5250 Odense SV, Denmark

**M11,14 R,L,M,N**
**P11,14 R,L,M**
**SAE 152-4 (D) WITH COUPLING 44-4**

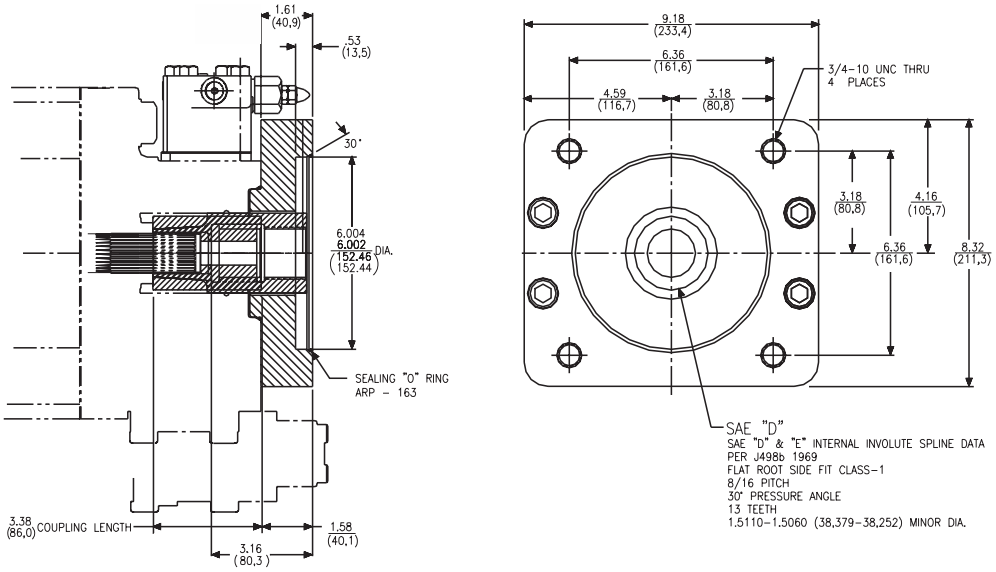


**M11,14 R,L,M,N**
**P11,14 R,L,M**
**SAE 165-4 (E) WITH COUPLING 44-4**

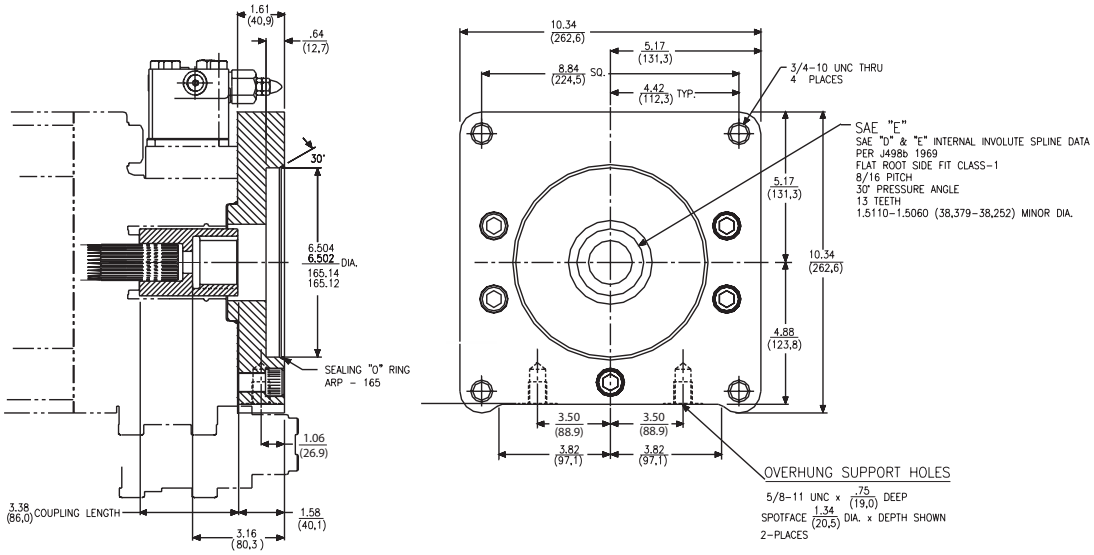




Tel: +45 63 12 83 00 | Email: ps@hymatik.com | www.hymatik.com | Hvidkaervej 27a, DK-5250 Odense SV, Denmark

**P24,30,S,X**
**SAE 101-2 (B) WITH COUPLING 22-4**

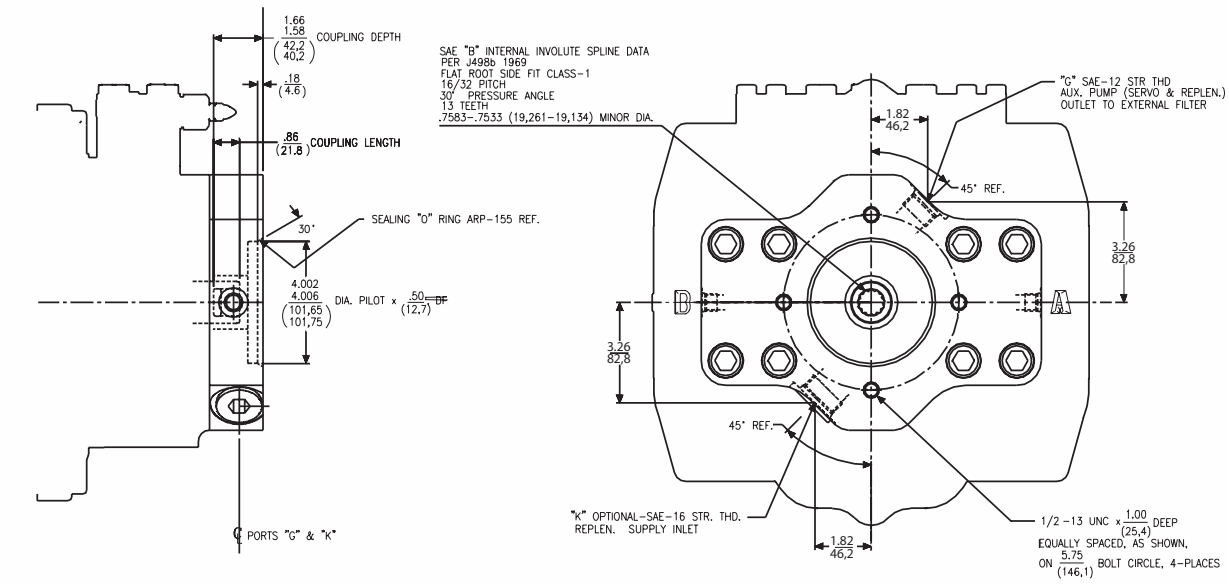


**P24,30,S,X**
**SAE 127-2 (C) WITH COUPLING 32-4**
**SAE 127-4 (C) WITH COUPLING 32-4**

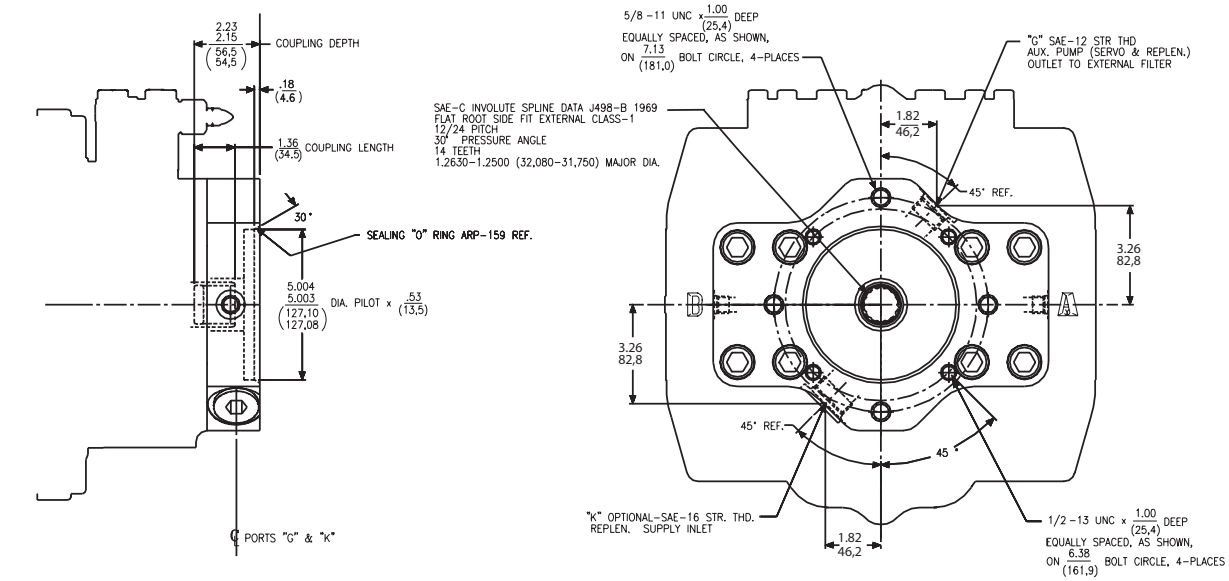




Tel: +45 63 12 83 00 | Email: ps@hymatik.com | www.hymatik.com | Hvidkaervej 27a, DK-5250 Odense SV, Denmark

**M24,30 R,L,M,N**
**P24,30 R,L,M**
**BLANKING PLATE**

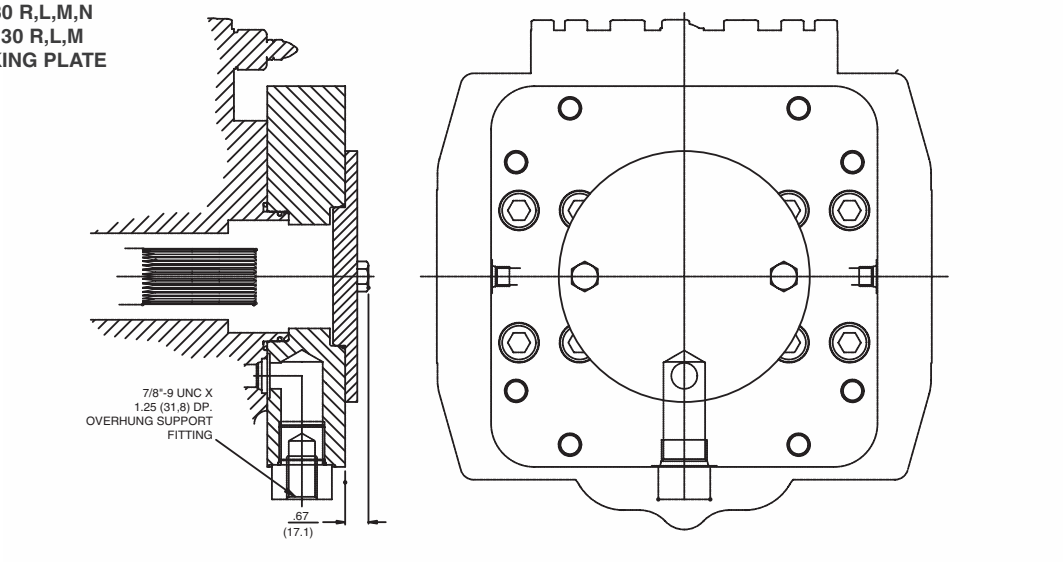


**M24,30 R,L,M,N**
**P24,30 R,L,M**
**SAE 101-2 (B) WITH COUPLING 22-4**
**SAE 101-4 (B) WITH COUPLING 22-4**

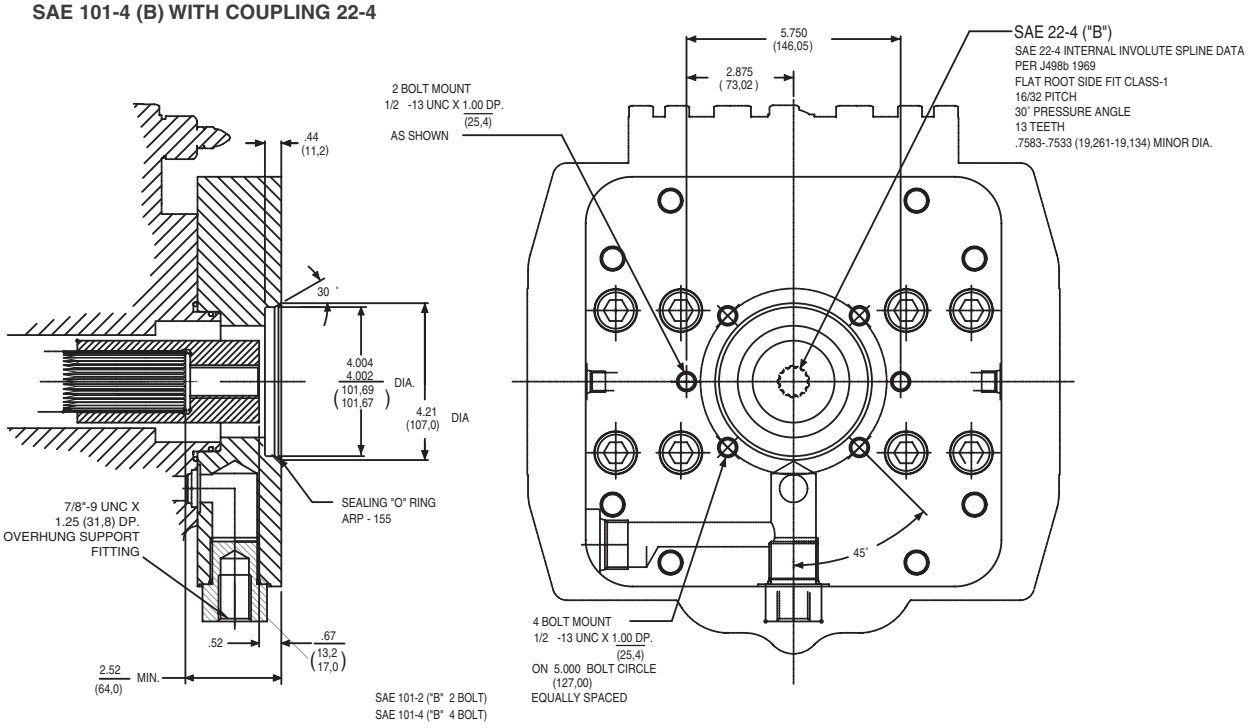




Tel: +45 63 12 83 00 | Email: ps@hymatik.com | www.hymatik.com | Hvidkaervej 27a, DK-5250 Odense SV, Denmark

**M24,30 R,L,M,N**
**P24,30 R,L,M**
**SAE 127-2 (C) WITH COUPLING 32-4**
**SAE 127-4 (C) WITH COUPLING 32-4**

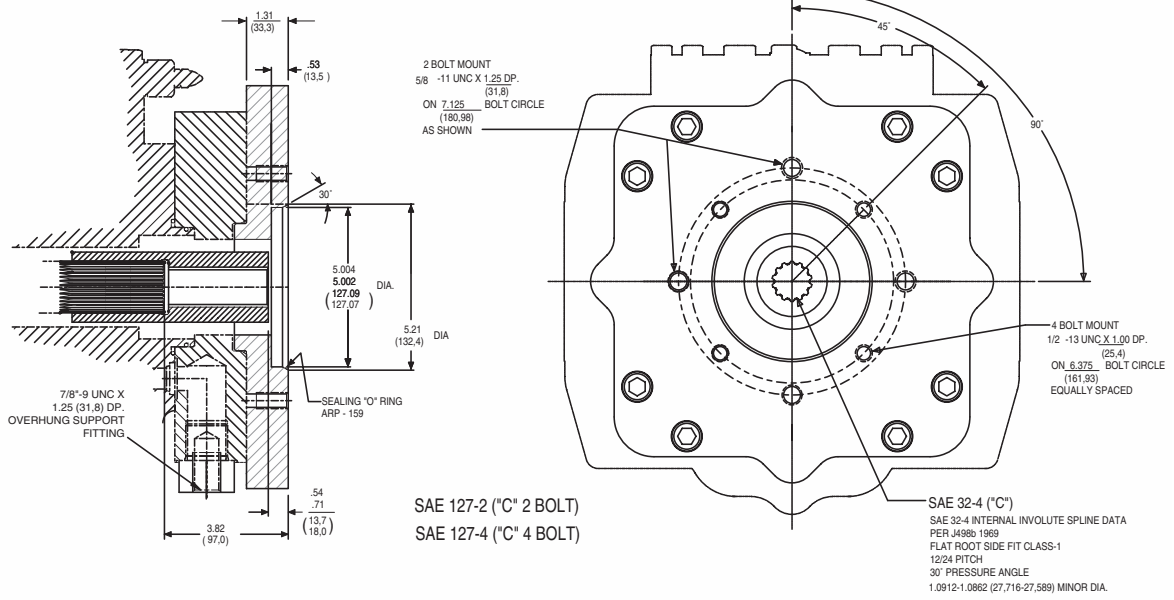


**M24,30 R,L,M,N**
**P24,30 R,L,M**
**SAE 152-4 (D) WITH COUPLING 44-4**

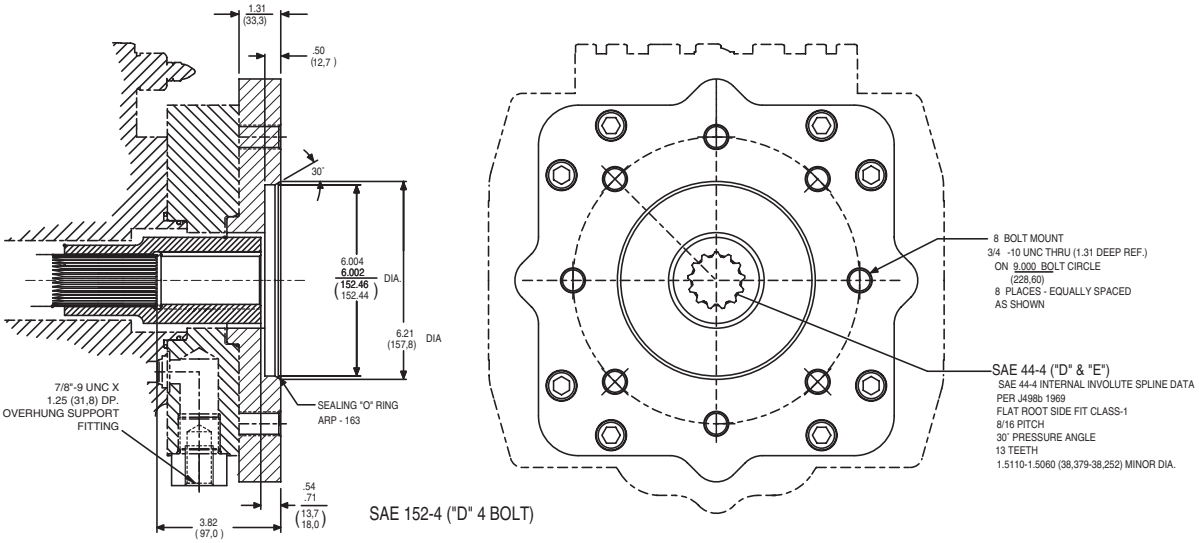




Tel: +45 63 12 83 00 | Email: ps@hymatik.com | www.hymatik.com | Hvidkaervej 27a, DK-5250 Odense SV, Denmark

**M24,30 R,L,M,N**
**P24,30 R,L,M**
**SAE 165-4 (E) WITH COUPLING 44-4**

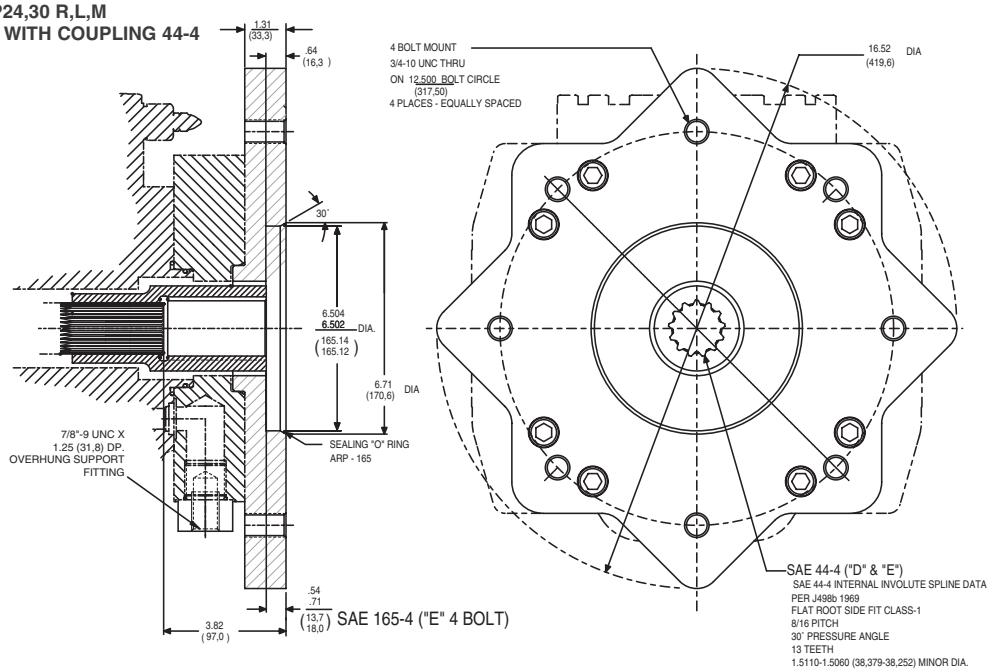


**M24,30 R,L,M,N**
**P24,30 R,L,M**
**SAE 177-4 (F) WITH COUPLING 50-4**

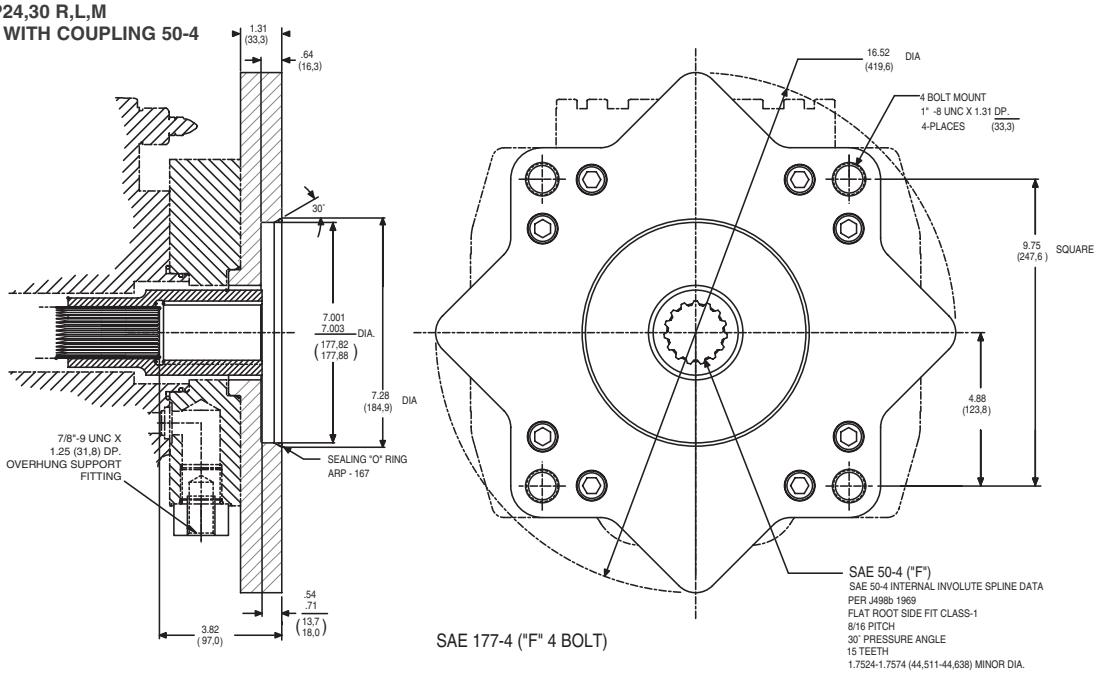




Tel: +45 63 12 83 00 | Email: ps@hymatik.com | www.hymatik.com | Hvidkaervej 27a, DK-5250 Odense SV, Denmark

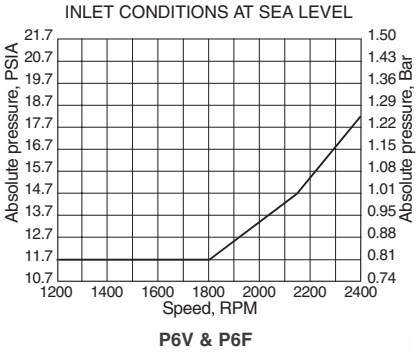


**P6V & P6F**

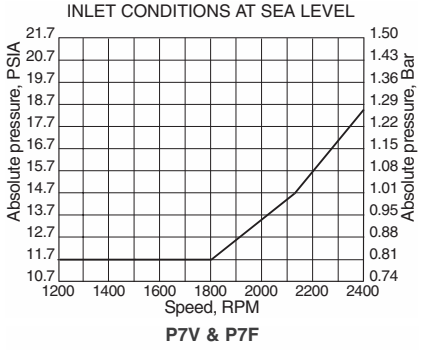


**P7V & P7F**

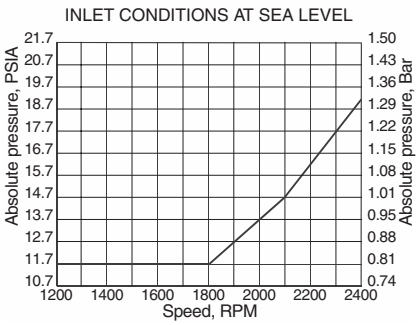


**P8V & P8F**

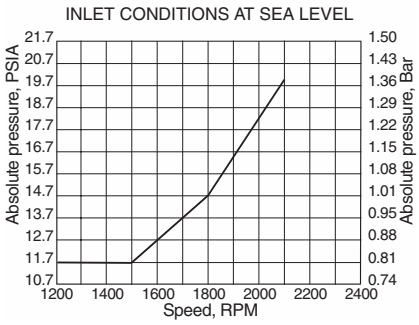


**P11V**

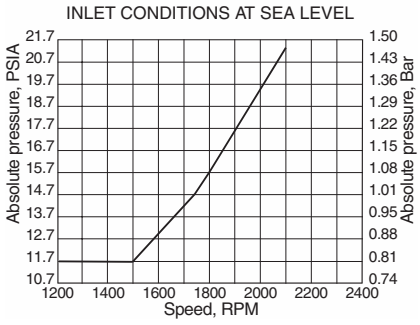


**P14V**

**Note:** The absolute inlet pressure is the pressure required to fill the pump with petroleum based fluids. The maximum pressure in the inlet port is 200 psi, 14 bar. For unboosted systems, the diameter of the suction line must be sized to allow a maximum velocity not higher than 4 ft/sec. A coarse screen may be considered in the suction line, no filter. For water in oil invert emulsions and water glycols increase the inlet absolute pressure by 25%, for phosphate ester increase the absolute inlet pressure by 35%. Any inlet pressures above atmospheric may increase noise levels and decrease efficiencies noted in this literature. Please consult your nearest Parker Office for further details.

**Inlet characteristics-auxiliary pump, port C**

| Series | Speed | Displacement | | Pressure absolute | |
|---|---|---|---|---|---|
| | rpm | $in^3/rev$ | $cm^3/rev$ | psi | bar |
| 6, 7, 8, 11, 14 | 1200 | 1.07 | 17,5 | 9.5 | 0,66 |
| 6, 7, 8, 11, 14 | 1800 | 1.07 | 17,5 | 9.5 | 0,66 |
| 6, 7, 8, 11, 14 | 2400 | 1.07 | 17,5 | 10.5 | 0,72 |
| 24, 30 | 1200 | 4.84 | 79,3 | 9.5 | 0,66 |
| 24, 30 | 1800 | 4.84 | 79,3 | 10.5 | 0,72 |

**Note:** Maximum pressure on inlet port C is 200 psi, 14 bar.



Tel: +45 63 12 83 00 | Email: ps@hymatik.com | www.hymatik.com | Hvidkaervej 27a, DK-5250 Odense SV, Denmark

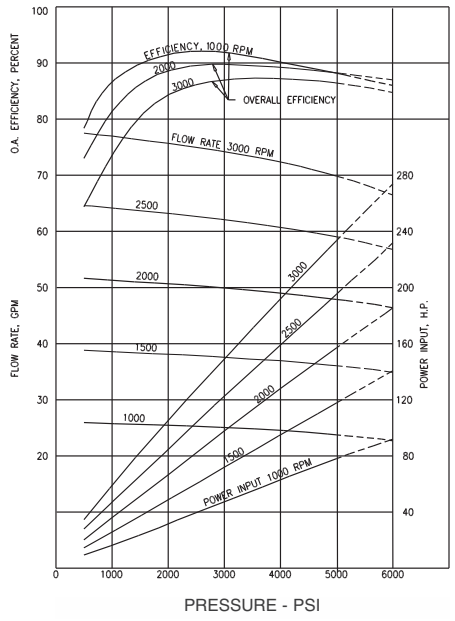


**Performance curves Series 6**
**Pump at full displacement**

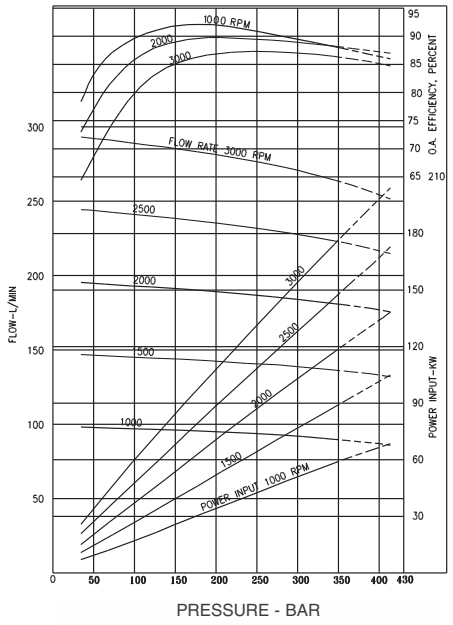


**Performance curves Series 6**
**Pump at full displacement**

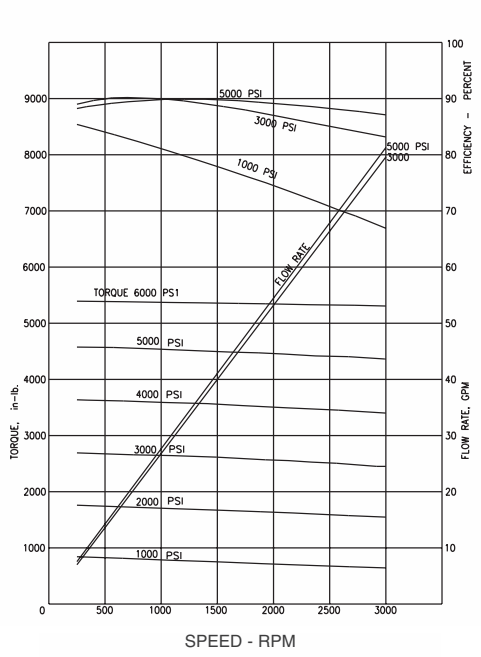


**Performance curves Series 6**
**Motor at full displacement**

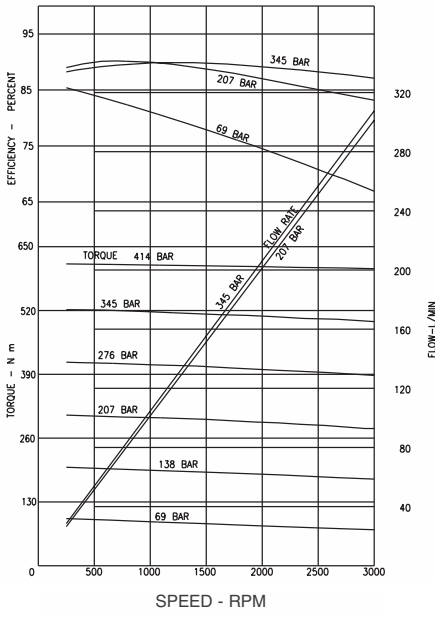


**Performance curves Series 6**
**Motor at full displacement**



**Parker Hannifin Corporation**
Hydraulic Pump and Power Systems Division
United States

Tel: +45 63 12 83 00 | Email: ps@hymatik.com | www.hymatik.com | Hvidkaervej 27a, DK-5250 Odense SV, Denmark

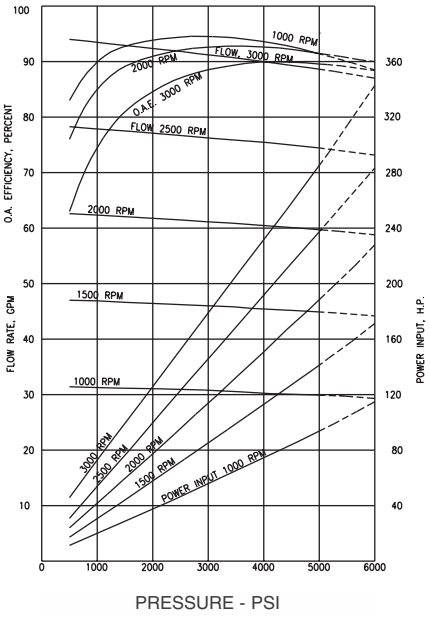


**Performance curves Series 7**
**Pump at full displacement**

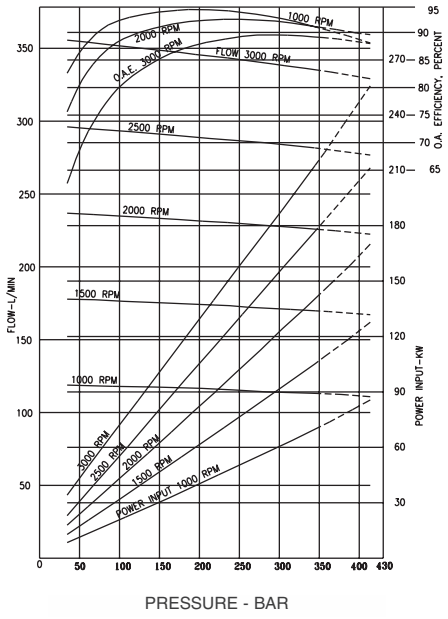


**Performance curves Series 7**
**Pump at full displacement**

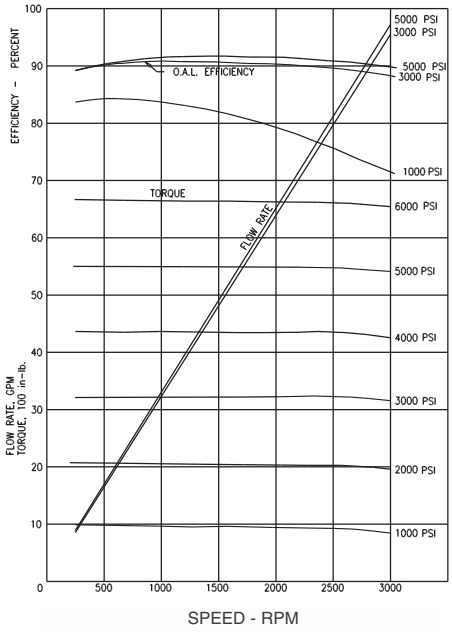


**Performance curves Series 7**
**Motor at full displacement**

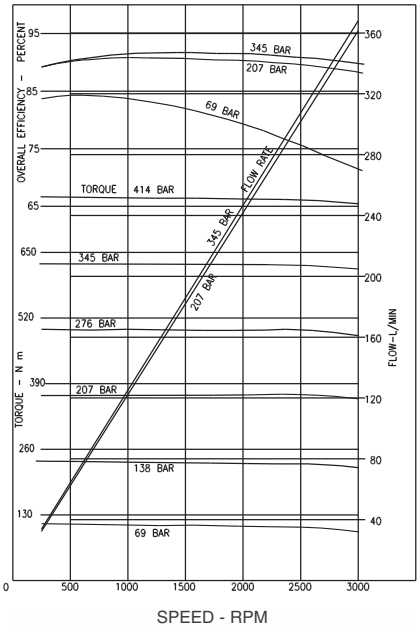


**Performance curves Series 7**
**Motor at full displacement**



Tel: +45 63 12 83 00 | Email: ps@hymatik.com | www.hymatik.com | Hvidkaervej 27a, DK-5250 Odense SV, Denmark

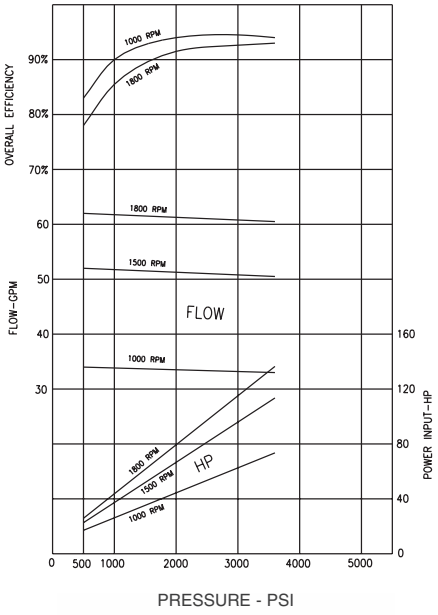


**Performance curves Series 8**
**Pump at full displacement**

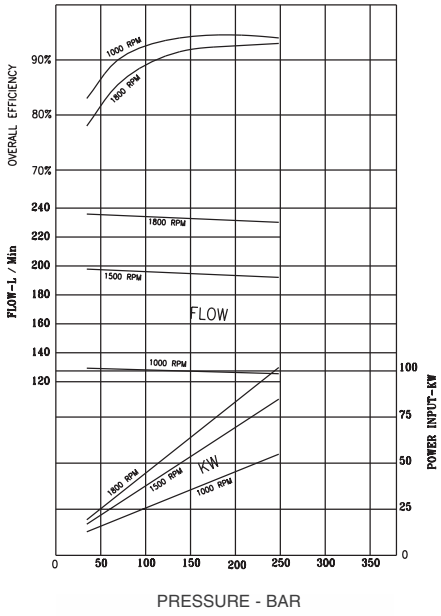


**Performance curves Series 8**
**Pump at full displacement**



**Parker Hannifin Corporation**
Hydraulic Pump and Power Systems Division
United States

Tel: +45 63 12 83 00 | Email: ps@hymatik.com | www.hymatik.com | Hvidkaervej 27a, DK-5250 Odense SV, Denmark

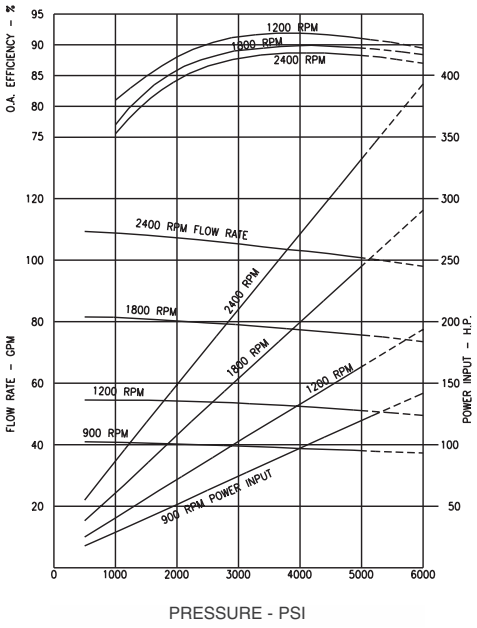


**Performance curves Series 11**
**Pump at full displacement**

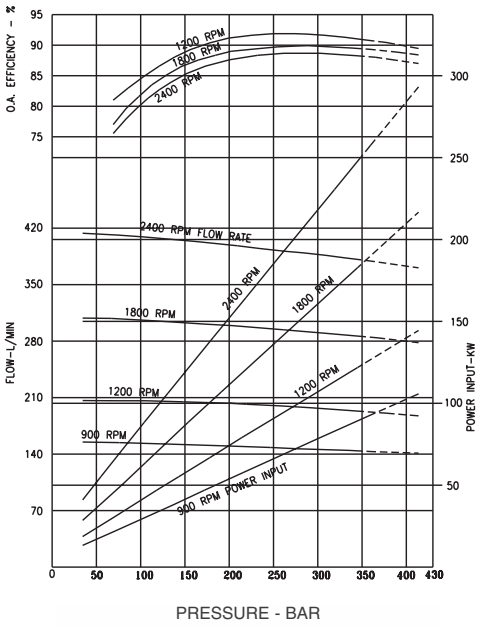


**Performance curves Series 11**
**Pump at full displacement**

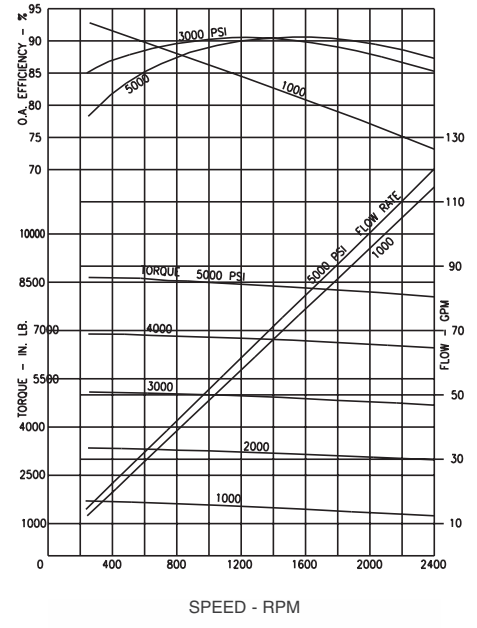


**Performance curves Series 11**
**Motor at full displacement**

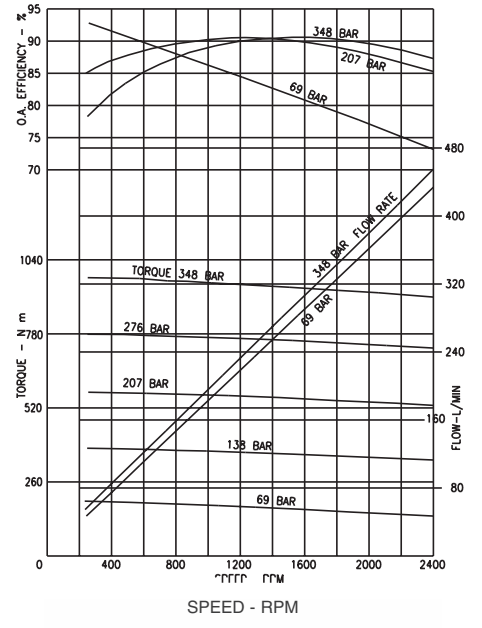


**Performance curves Series 11**
**Motor at full displacement**



Tel: +45 63 12 83 00 | Email: ps@hymatik.com | www.hymatik.com | Hvidkaervej 27a, DK-5250 Odense SV, Denmark

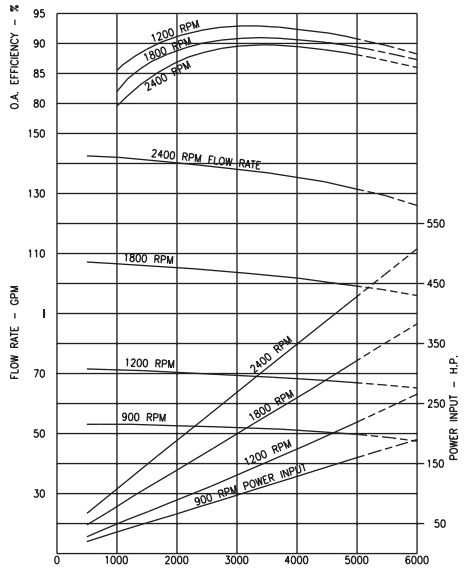


**Performance curves Series 14**
**Pump at full displacement**

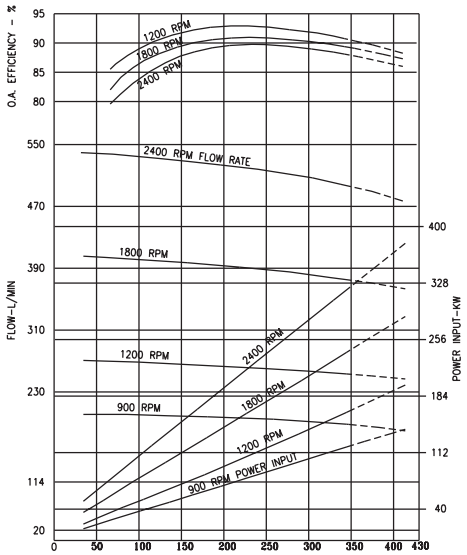


**Performance curves Series 14**
**Pump at full displacement**

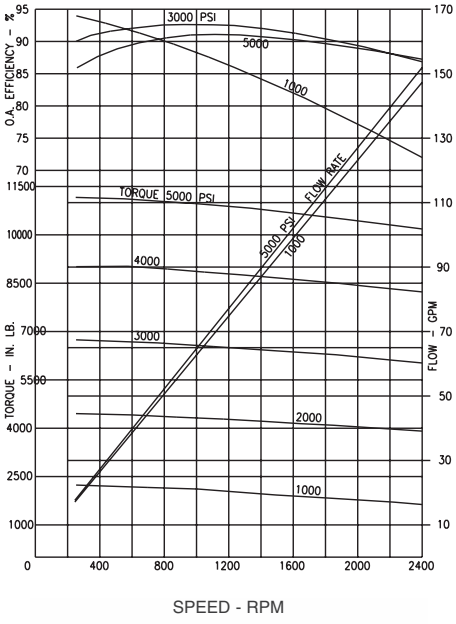


**Performance curves Series 14**
**Motor at full displacement**

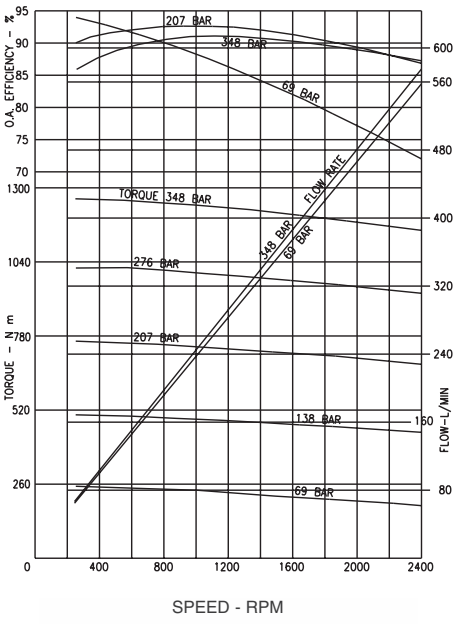


**Performance curves Series 14**
**Motor at full displacement**



**Parker Hannifin Corporation**
Hydraulic Pump and Power Systems Division
United States

Tel: +45 63 12 83 00 | Email: ps@hymatik.com | www.hymatik.com | Hvidkaervej 27a, DK-5250 Odense SV, Denmark

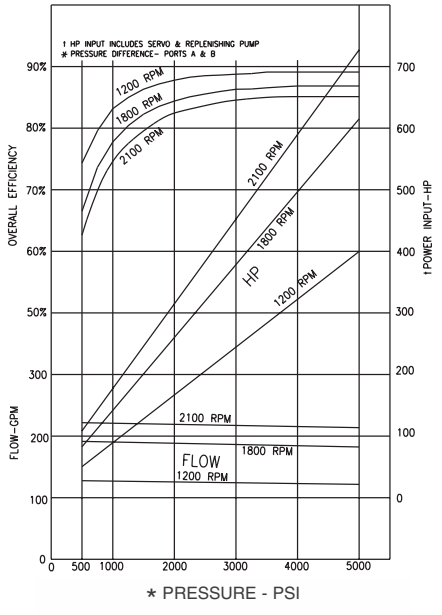


**Performance curves Series 24**
**Pump at full displacement**

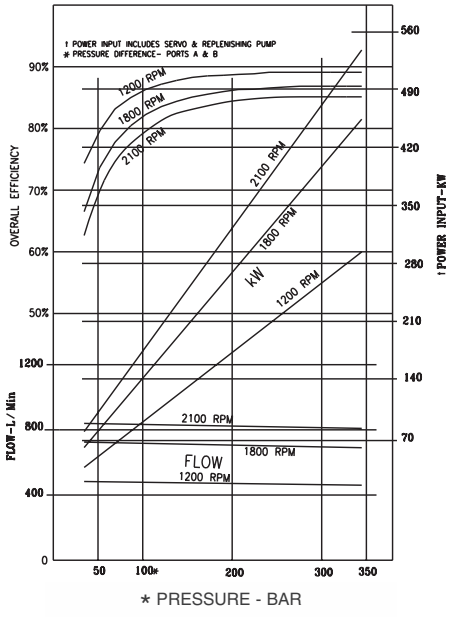


**Performance curves Series 24**
**Pump at full displacement**

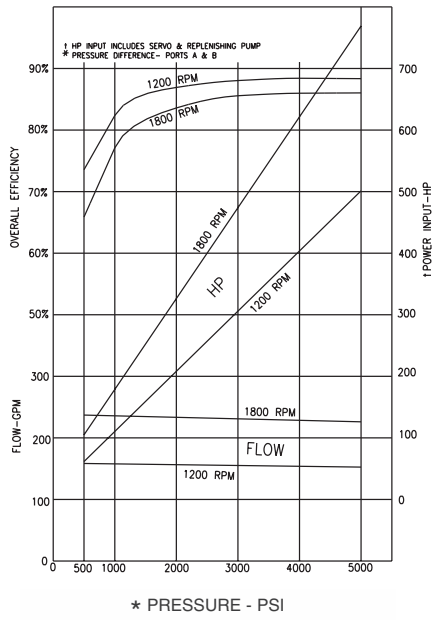


**Performance curves Series 30**
**Pump at full displacement**

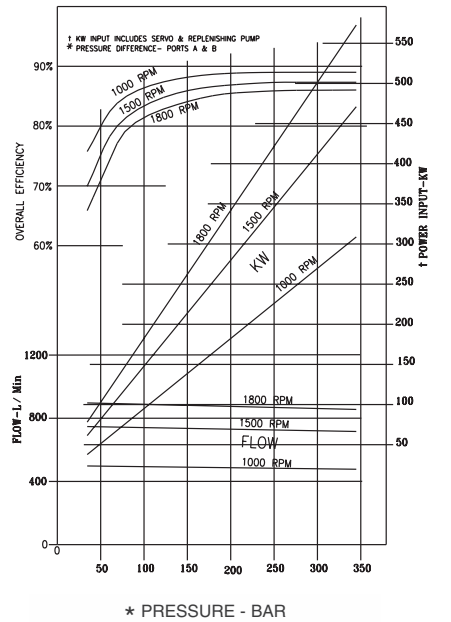


**Performance curves Series 30**
**Pump at full displacement**



Tel: +45 63 12 83 00 | Email: ps@hymatik.com | www.hymatik.com | Hvidkaervej 27a, DK-5250 Odense SV, Denmark

| CODE | DESCRIPTION | HYDRAULIC CIRCUIT |
|---|---|---|
| 10 | MANUAL SCREW ADJUST | 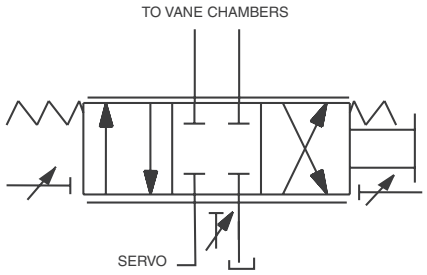 |
| 2A | TWO POSITION CONTROL | 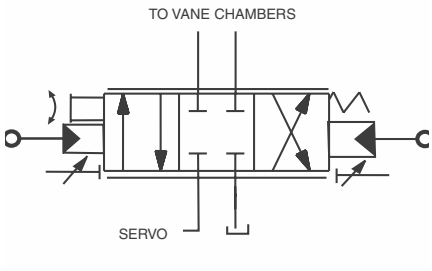 |
| 2H | 3 POSITION CONTROL | 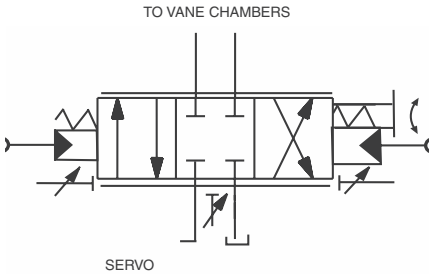 |
| 2M | 2 POSITION CONTROL WITH CEPTOP3, NG6 VALVE | 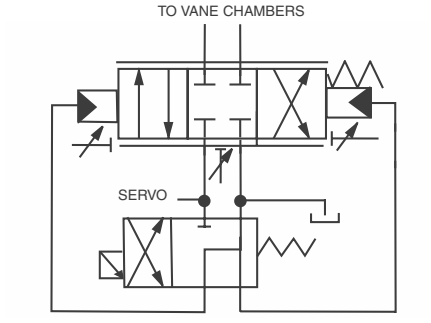 |

| TYPICAL PERFORMANCE | DESCRIPTION OF OPERATION |
|---|---|
| 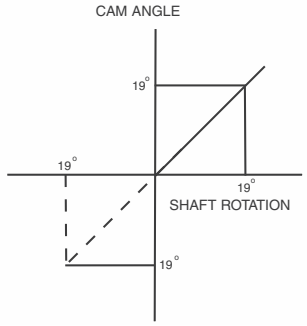 | Spring loaded toward maximum displacement, with an adjustment screw to limit the displacement anywhere between 0% and 100%. A minimum volume stop is also supplied so that when the rotary servo shaft is turned, the displacement can be varied only between the minimum and maximum settings.<br>Torque required to rotate servo shaft:<br>20 lb-in, 2.56 Nm. |
| 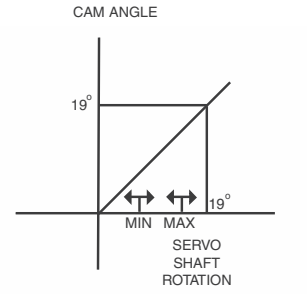 | Hydraulically piloted non-proportionally between adjustable minimum and maximum displacements. The control is spring loaded toward minimum when used on pumps, to maximum on motors. Servo pressure is switched by an external valve to drive the control in either direction. When used on motors, the minimum setting can be set no lower than 30% of maximum. |
| 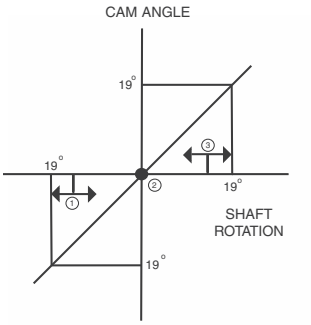 | Hydraulically piloted non-proportionally between an adjustable minimum displacement of 0±5% and two fully adjustable maximum displacements, one in either direction, and spring loaded toward minimum. Servo pressure is switched by an external valve to drive the control in either direction. |
| 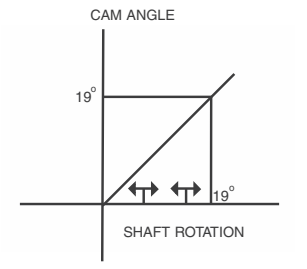 | Same as 2A except a CEPTOP3, NG6 two position directional valve is mounted to the control. With the solenoid de-energized, the control is spring loaded to zero for pumps and to maximum displacement for motors. Energizing the solenoid drives the control toward maximum displacement on pumps, minimum on motors. When used on motors, the minimum settings can be no less than 30% of maximum. |



Tel: +45 63 12 83 00 | Email: ps@hymatik.com | www.hymatik.com | Hvidkaervej 27a, DK-5250 Odense SV, Denmark

| | | |
|---|---|---|
| 2N | 3 POSITION CONTROL WITH CEPTOP3, NG6 VALVE | 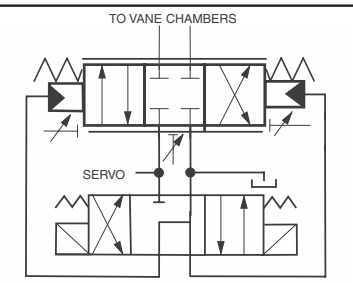 |
| 40 | SPRING CENTERED ROTARY SERVO | 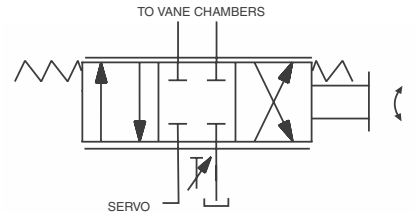 |
| 4A | SPRING CENTERED ROTARY SERVO WITH ADJUSTABLE STOPS | 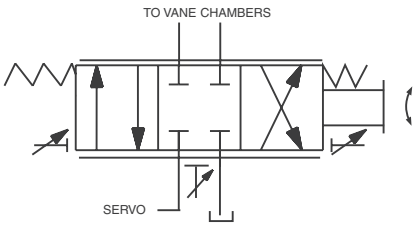 |
| 4B | SPRING CENTERED ROTARY SERVO WITH AUTOMATIC BRAKE AND BYPASS CONTROL | 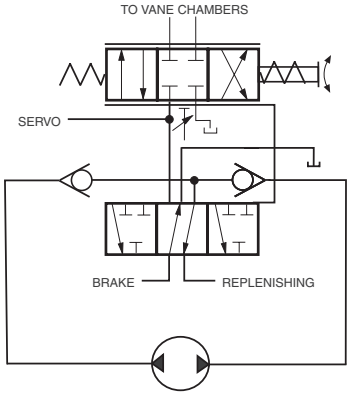 |



Parker Hannifin Corporation
Hydraulic Pump and Power Systems Division
United States

Tel: +45 63 12 83 00 | Email: ps@hymatik.com | www.hymatik.com | Hvidkaervej 27a, DK-5250 Odense SV, Denmark

| TYPICAL PERFORMANCE | DESCRIPTION OF OPERATION |
|---|---|
| 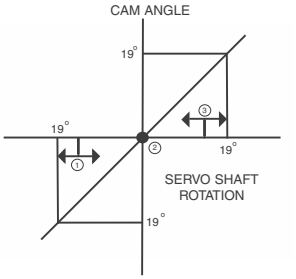 | Same as 2H except a CEPTOP3, NG6 three position directional valve is mounted to the control. With the solenoids de-energized, the control is spring loaded to zero. Energizing a solenoid drives the control toward maximumdisplacement in one of the two directions. |
| 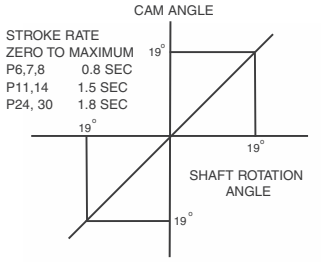 | The 40 is the basic displacement control for all Goldcup. It is actuated by a servo shaft that is rotated from 0º - 19º, either side of center. This action opens a unique slide valve to port servo oil to and from the vane chambers that actuate the rocker cam. Vanes, integral to the cam, move the cam so that it follows the rotary servo input shaft motion exactly. When the cam reaches the position equal to that of the input shaft, the slide valve closes. Any cam motion due to pumping forces immediately opens the slide valve to correct the cam position.<br>Springs cause the control to return to zero stroke when no external force is applied to the servo shaft. An adjustment is provided to locate the exact zero position, to prevent machine creep. |
| 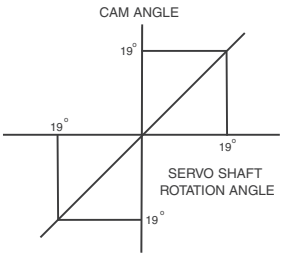 | The 4A control is the same as the 40, with addition of adjustable maximum volume stop screws, with locking caps, to limit the control to less than 100% displacement. Stops are present on both sides of center and may be set independently to different settings. |

The 4B control is the same as the 4A control, with the addition of an output port that will provide servo pressure to control a spring applied, pressure released parking brake. The control contains anticoincidence functions that cause the brake to release immediately upon application of an on-stroke motion at the rotary servo shaft, and that cause the brake to remain released even after the rotary servo shaft is recentered, until the pump rocker cam actually returns to zero, at which time the brake will set. Additionally, a small bypass is opened between the pump A & B ports to bypass any flow that is generated if the pump is not exactly zeroed. The bypass closes whenever the brake is released.

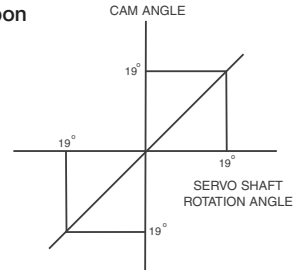


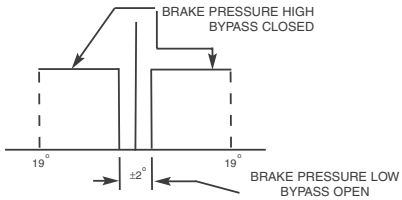




Tel: +45 63 12 83 00 | Email: ps@hymatik.com | www.hymatik.com | Hvidkaervej 27a, DK-5250 Odense SV, Denmark

| CODE | DESCRIPTION | HYDRAULIC CIRCUIT |
|---|---|---|
| 4C | SPRING CENTERED BRAKE AND ADJUSTABLE BYPASS CONTROL (AUTOMATIC BRAKE CONTROL) | 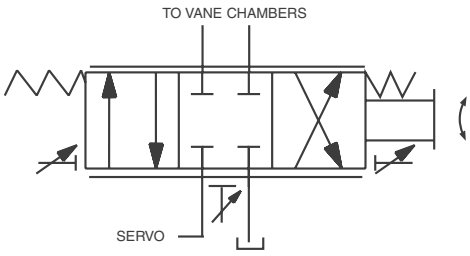 |
| 8A | HYDRAULIC STROKER | 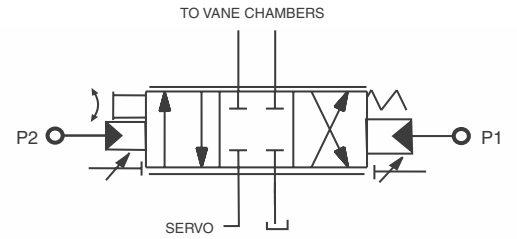 |

| TYPICAL PERFORMANCE | DESCRIPTION OF OPERATION |
|---|---|
| 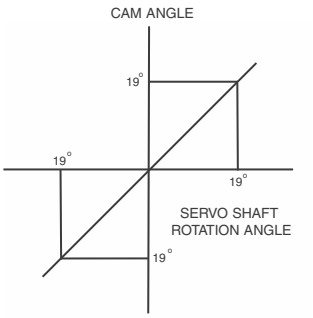 | This control combines the features of the 4A and 4B controls. See above descriptions. |
| 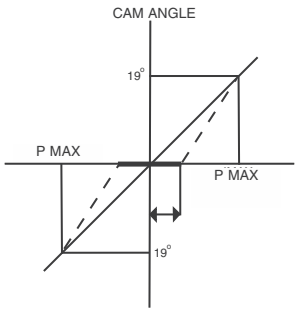 | The 8A control controls displacement in proportion to a hydraulic pressure, values listed below. Pressure applied in the P1 port drives the pump on stroke in one direction, P2 port in the other. Adjustable maximum displacement stops are included. The 8C option, with automatic brake control, is also available. |



Tel: +45 63 12 83 00 | Email: ps@hymatik.com | www.hymatik.com | Hvidkaervej 27a, DK-5250 Odense SV, Denmark

| CODE | DESCRIPTION | HYDRAULIC CIRCUIT |
|---|---|---|
| 9A | ELECTRIC STROKER | 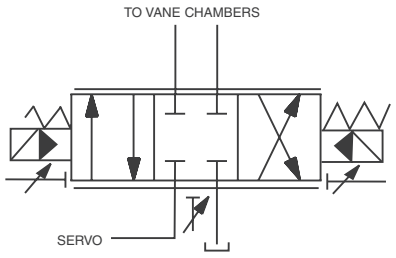 |
| 7D6<br>7D8<br>7F6<br>7F8 | HIGH IQ SERVOVALVE CONTROL | 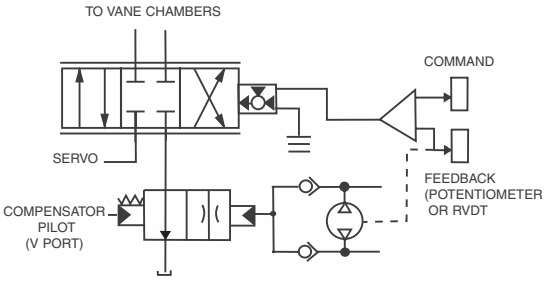 |



Tel: +45 63 12 83 00 | Email: ps@hymatik.com | www.hymatik.com | Hvidkaervej 27a, DK-5250 Odense SV, Denmark

## TYPICAL PERFORMANCE

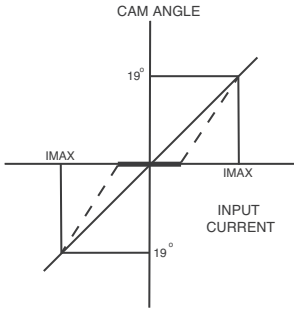


## DESCRIPTION OF OPERATION

The 9A control controls displacement in proportion to an electric current between zero and 350 milliamps for the 24 volt version, and up to 650 milliamps for the 12 volt version. The control signal is a Pulse Width Modulated signal. Current signal to one coil drives the pump in one direction, and to the other coil in the opposite. Adjustable maximum displacement stops are included. The 9C option, with automatic brake control, is also available.

| Specifications: | |
|---|---|
| Hysteresis | 5% typical, 8% maximum |
| Linearity | 8% |
| Response | P6,7,8 0.9 seconds, zero to full stroke or back |
| | P11,14 1.5 seconds, zero to full stroke or back |
| | P24, 30 1.8 seconds, zero to full stroke or back |
| Repeatability | 2% |
| Temperature null shift | <2% per 100 °F (38 ° C) |
| Servo pressure required | 200-1000 psi (14-70 bar), 400 nominal (28 bar) |
| Coil resistance | 33.8 ohms (24v coil) & 8.8 ohms (12v coil) |
| Electrical input* | 270 ma minimum, 325 ma nominal, 380 ma maximum (24v coil) |
| Neutral deadband * | 150 ma mini mum, 180 ma nominal, 210 ma maximum (24v coil) |
| Manual override | 3/16" Allen wrench, 30 in-lb (3.4Nm) with zero signal |
| Fluid types | All |
| | |
| Available open-loop drivers | Jupiter 900 card S20-14078<br>Dual Driver module 027-22071-0<br>IQAN Module (MC Family) Contact EDC |
| | Power supply 762-30026-0 |
| Electrical connector | DIN 43650 type AF, 16-01008-8 |
| Fluid cleanliness | NAS 1638, class 8 or ISO 17/14 |

* 12V coils are twice these values

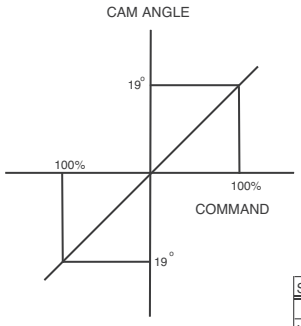


The 7** control is a high response displacement control that uses a servovalve to direct high flow levels to and from the vane chambers, in order to achieve high stroke rates on the pump. A feedback potentiometer or RVDT (Rotary Variable Differential Transformer) is used to feed back the rocker cam position to the controlling electronics to achieve stable operation.

The 7D6 control uses a servovalve and a feedback potentiometer for feedback, the 7D8 uses an RVDT.

The 7F6 control uses servovalve and a the feedback potentiometer, but also has a special valve block with a valve in it to shut off the servovalve, so that control may be taken over by a 4A2 control also mounted to the pump as a manual override. The 7F8 is the same, except using an RVDT.

| Specifications for 7D,7F: | | | |
|---|---|---|---|
| | P6,7,8 | P11,14 | P24/30 |
| Hysteresis | <±1% | <±1% | ±1% |
| Linearity | <±0.5% | <±0.5% | ±0.5% |
| Step Response | 180ms | 300 Ms | 360 Ms |
| Small Signal Frequency Response | 10 Hz, 400 psi (28 bar) | 8.2 Hz,, 440 psi (30 bar) | 6 Hz,, 500 psi (35 bar) |
| | 17 Hz,, 1000psi (70 bar) | 13 Hz,, 1000 psi (70 bar) | 9 Hz,, 1000 psi (70 bar) |
| Servo Pressure | 1000 psi (70 bar) nominal | | |
| Coil Resistance | 1000 ohms | | |
| Electrical Input | 0-10 ma | | |
| Feedback Pot Output, | ±3 VDC | | |
| 19", 15 VDC excitation | | | |
| Feedback RVDT Output, | ±2.4 VDC | | |
| 19", 15 VDC excitation | | | |
| Fluid Types | All | | |
| Fluid Cleanliness | NAS 1638, class8 or ISO 17/14 | | |
| Available Drivers | Jupiter High IQ S20-11958 | | |
| Electrical Connectors | supplied with pump | | |



Tel: +45 63 12 83 00 | Email: ps@hymatik.com | www.hymatik.com | Hvidkaervej 27a, DK-5250 Odense SV, Denmark

| CODE | DESCRIPTION | HYDRAULIC CIRCUIT |
|---|---|---|
| 7J6<br>7J8<br>7K6<br>7K8<br>7Q8<br>7R8 | HIGH IQ<br>DF+ CONTROL<br>PROPORTIONAL<br>VALVE | 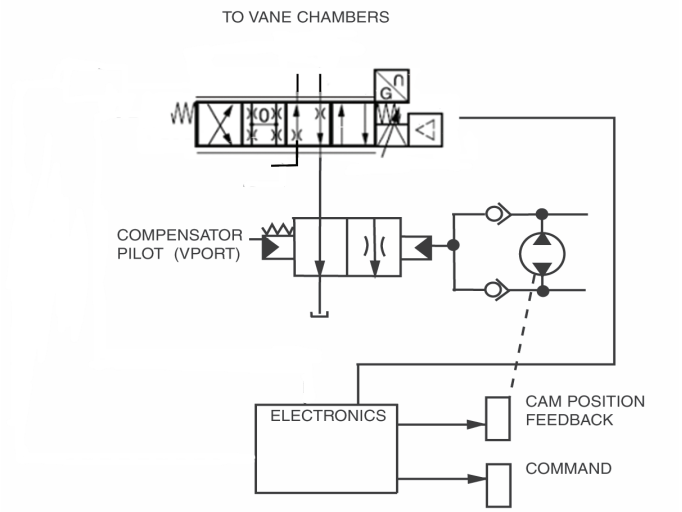<br>**Note: 7Q and 7R options are supplied with on-board electronics.** |
| --4 | TORQUE LIMITER OVERDRIVE | 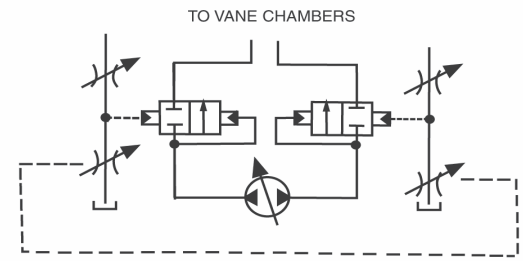 |
| **E | INTELLIGENCE ENABLED WITH SENSOR | Displacement Flow Pressure Temperature Fluid |



Parker Hannifin Corporation
Hydraulic Pump and Power Systems Division
United States

Tel: +45 63 12 83 00 | Email: ps@hymatik.com | www.hymatik.com | Hvidkaervej 27a, DK-5250 Odense SV, Denmark

## TYPICAL PERFORMANCE

CAM ANGLE

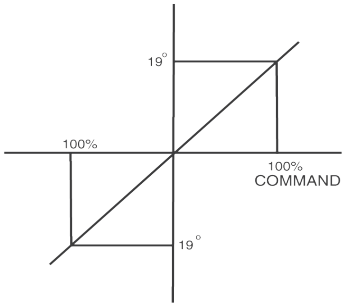


## DESCRIPTION OF OPERATION

The 700 controls are high response displacement controls that use proprotional directional flow control valves to direct high flow levels to and fron the vane chambers, in order to achieve high stroke rates on the pump a feedback potentiometer or RVDT (Rotary Variable Differential Transformer) is used to feed back the rocker cam position to the controlling electronics to achieve stable operation.

The 7J6 control uses a proportional directional control valve and a feedback potentionmeter for feedback, the 7J8 uses an RVDT.

The 7K6 control uses proportional directional control valve and a feedback potentiometer, but also has a special valve block with a valve in it to shut off the servovalve, so that control maybe taken over by a 4A2 control also mounted to the pump as a manual override. The 7K8 is the same, except using an RVDT.

The 7Q/7R options are the same as the 7J/7K options except the 7Q and 7R use a proportional valve with on-board electronics and close the loop on cam position. These options are only available with the "8" RVDT feedback.

| Specifications for 7J, 7K | | | |
|---|---|---|---|
| | P6,7,8 | P11,14 | P24/30 |
| Hysteresis | <±1% | <±1% | <±1% |
| Linearity | <±0.9% | <±0.9% | ±0.9% |
| Step Response | 180 ms | 300 ms | 300 ms |
| Small Signal Frequency Response | 16 Hz, 400 psi (28 bar) | 12 Hz,, 440 psi (30 bar) | 8Hz,, 500 psi (35 bar) |
| | 25 Hz,, 1000 psi (70 bar) | 20 Hz,, 1000 psi (70 bar) | 16 Hz,, 1000 psi (70 bar) |
| Servo Pressure | 1000 psi (70 bar) nominal | | |
| Coil Resistance | 4 ohms | | |
| | | | |
| Feedback Pot Output | ±3 VDC at 19º, 15 VDC excitation | | |
| Feedback RVDT Output, | ±2.4 VDC at 19º, 15 VDC excitation | | |
| Fluid Types | All | | |
| Fluid Cleanliness | NAS 1638, class 8 or ISO 17/14 | | |
| Available Drivers | 7J & 7K (PiD00A-40X for "Q" type control), 7Q / 7R have on-board electronics (use Pro PXD software) | | |

TORQUE

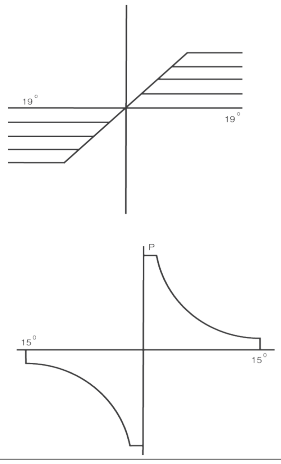


The **4 control option can be added to any other control, except the 7**, and will limit the amount of torque accepted by the drive shaft on the pump by reducing displacement if the product of pressure and flow (displacement) exceed a preset value. This will allow the pump to go to full stroke, but not at maximum pressure, and it will allow the pump to go to full pressure, but not at maximum flow. When the condition causing the overload disappears, the pump control reverts to the main displacement control. The pressure compensator override is always in effect, at all times, and its function is not effected by this control in any way.

Minimum setting is 25% of maximum input torque.
(5000 (PSI) x MAX Displacement / 2 1/2 )

Gold Cup IE combines the brawn of Gold Cup series pump with the intelligence of operational sensors and a fully Predictive Analysis Engine. Learn more at https://discover.parker.com/GoldCupIE.



Tel: +45 63 12 83 00 | Email: ps@hymatik.com | www.hymatik.com | Hvidkaervej 27a, DK-5250 Odense SV, Denmark

**Series 6, 7 & 8 Information**

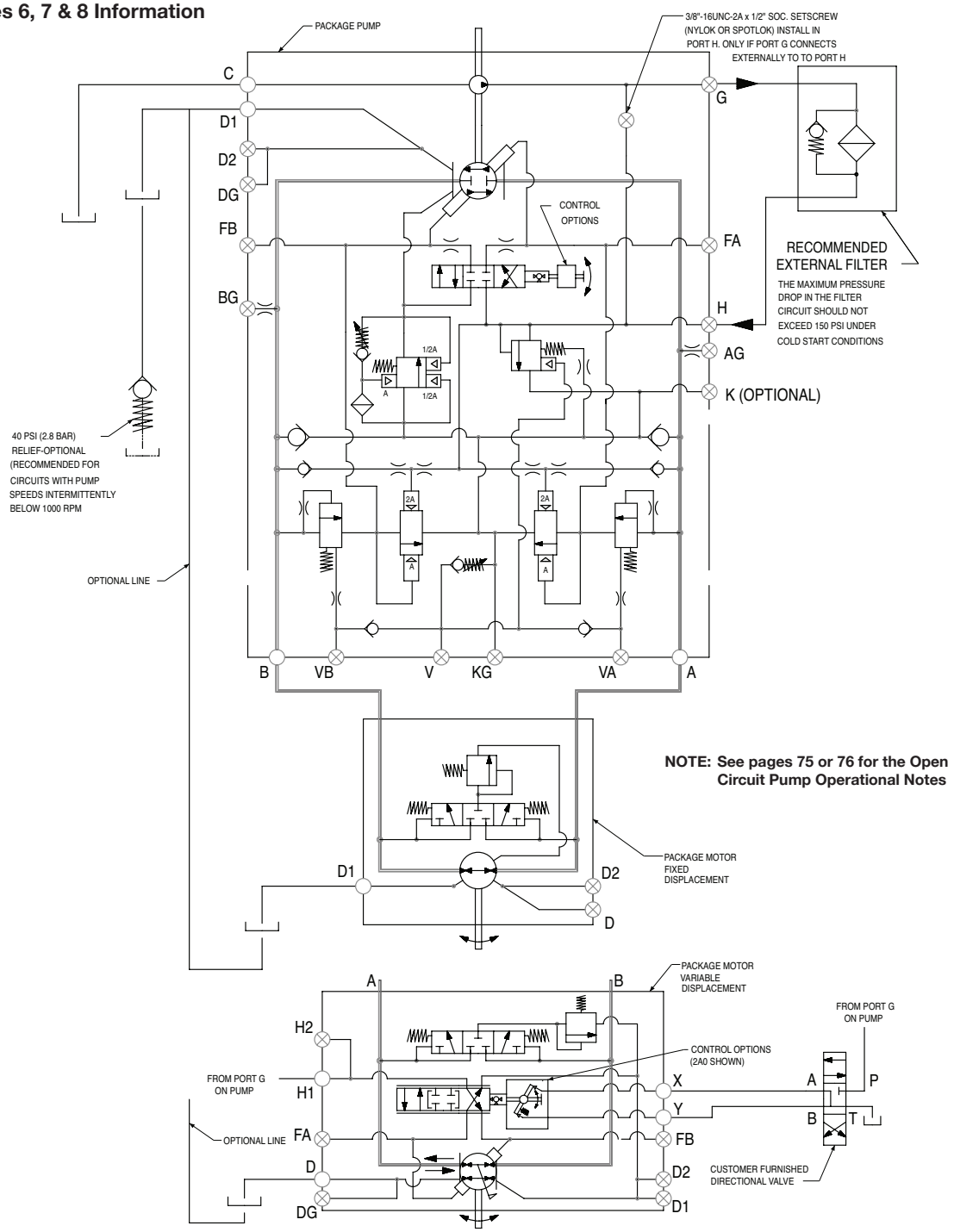




Tel: +45 63 12 83 00 | Email: ps@hymatik.com | www.hymatik.com | Hvidkaervej 27a, DK-5250 Odense SV, Denmark

### Series 11 & 14 Information

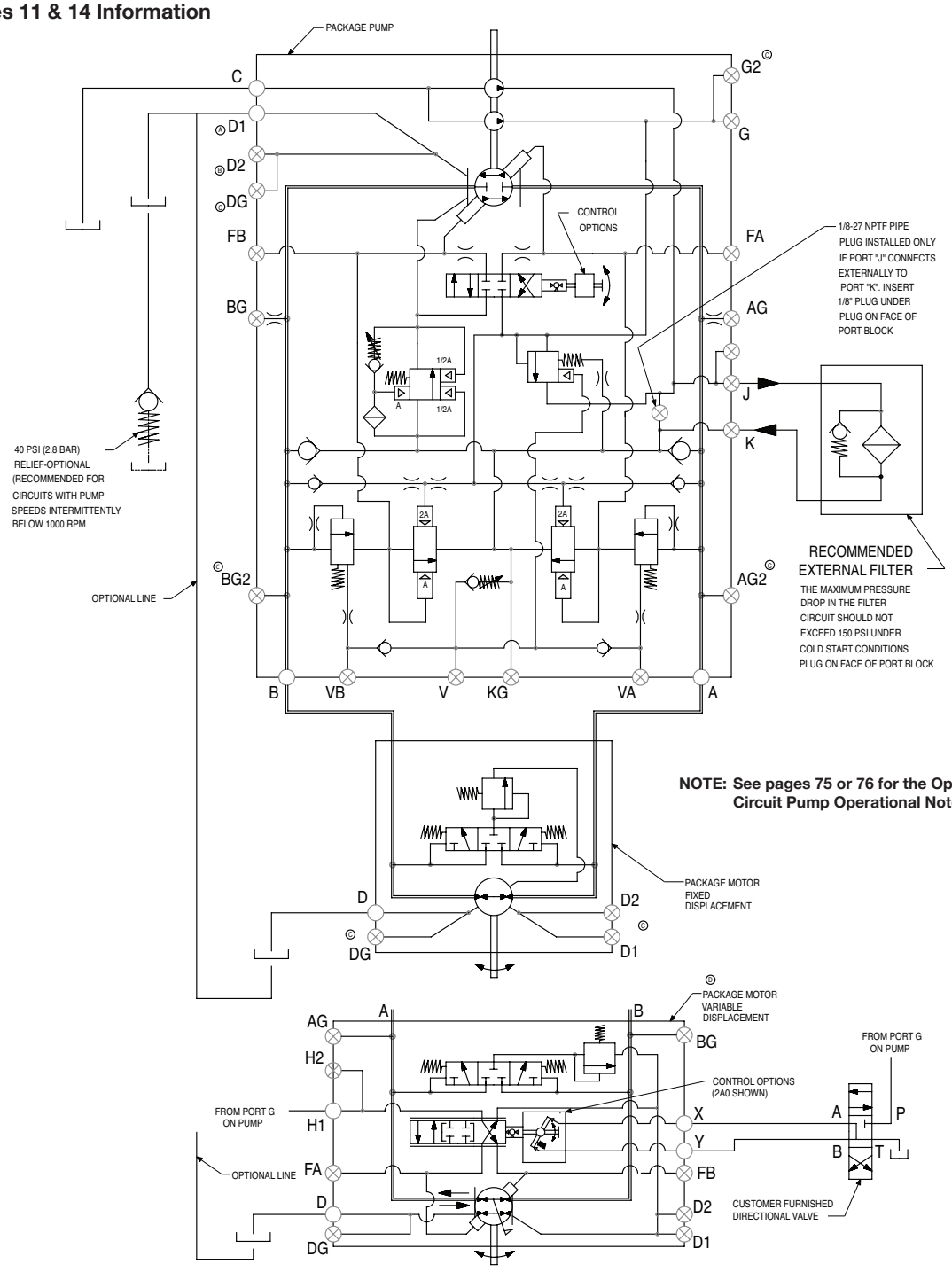




Tel: +45 63 12 83 00 | Email: ps@hymatik.com | www.hymatik.com | Hvidkaervej 27a, DK-5250 Odense SV, Denmark

**Series 24 & 30 Information**

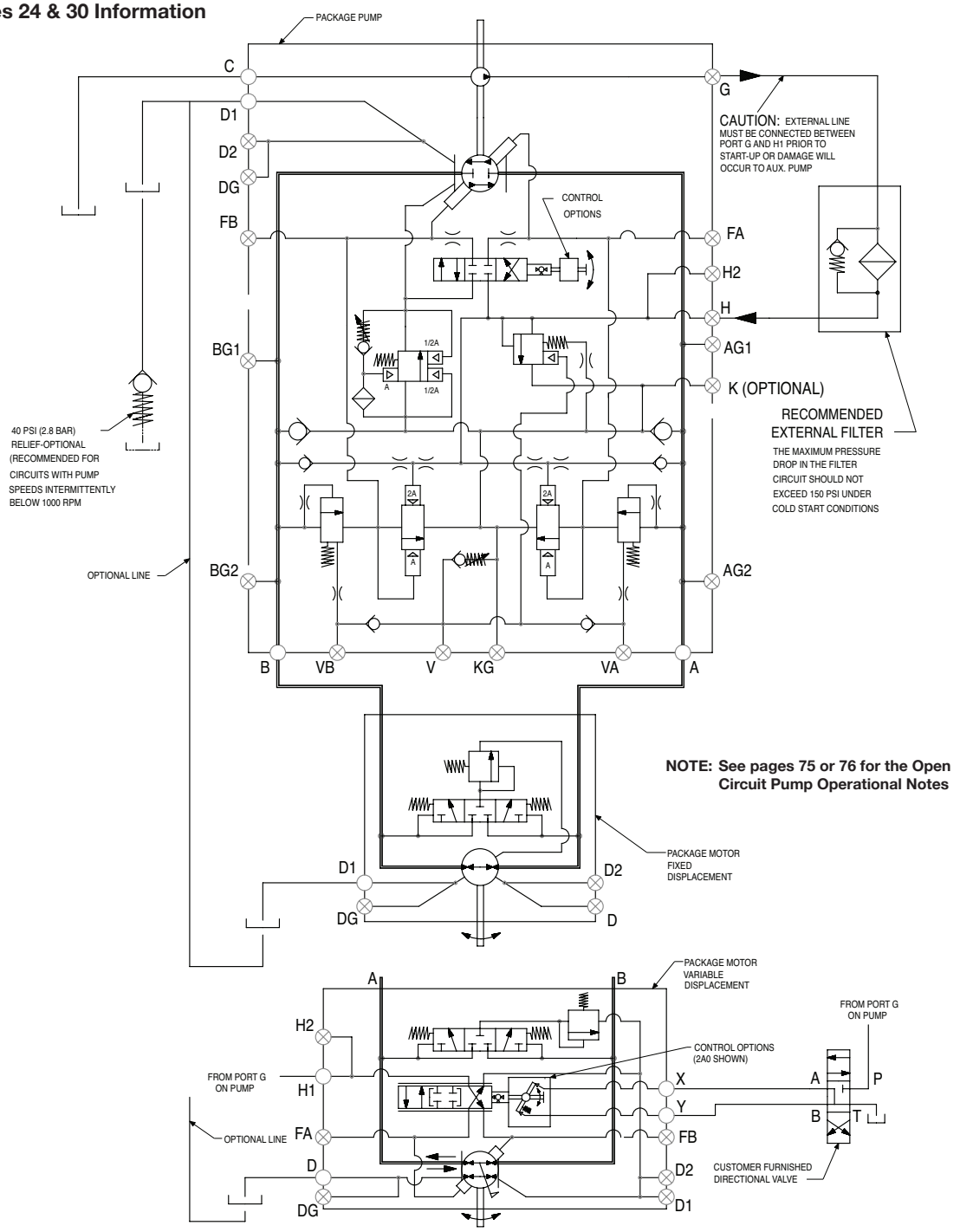

### Series 6, 7 & 8 Information

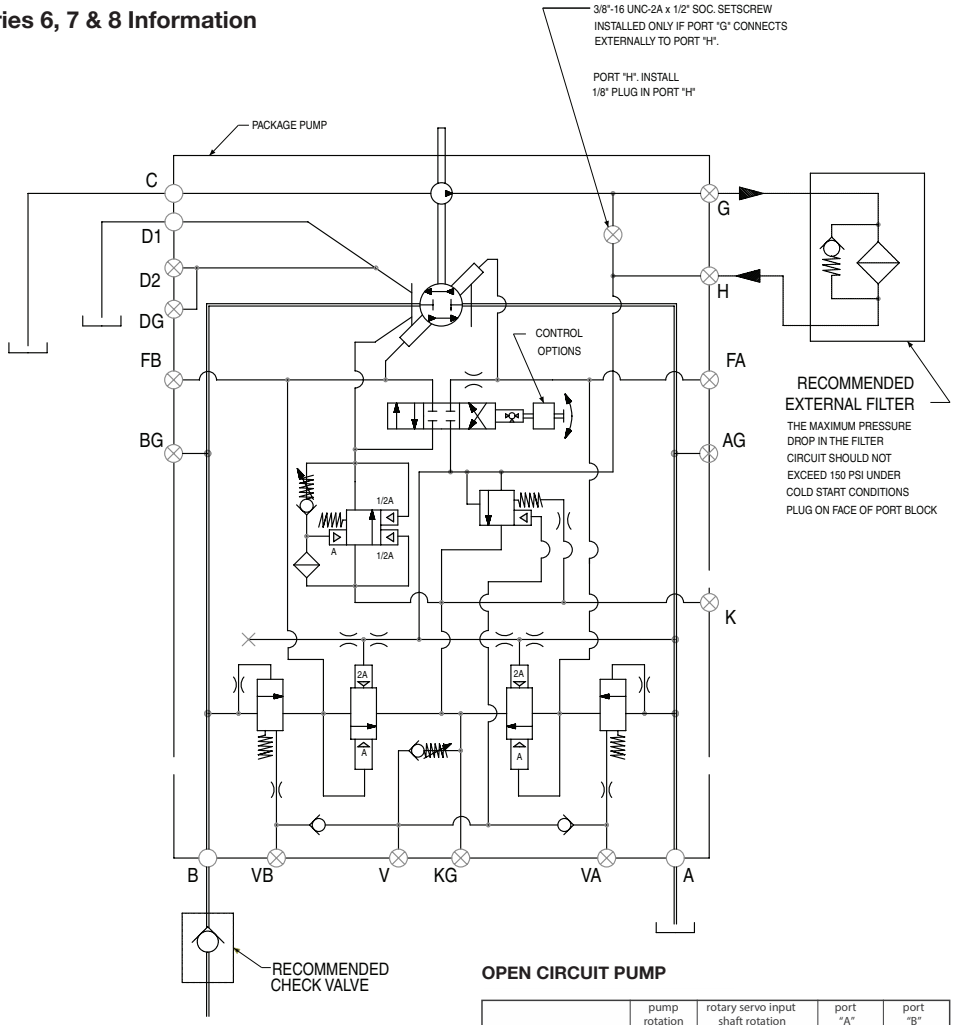


**OPEN CIRCUIT PUMP**

| | pump rotation | rotary servo input shaft rotation | port "A" | port "B" |
|---|---|---|---|---|
| input command "A" side | R | CW | inlet | outlet |
| | L | CCW | inlet | outlet |
| input command "B" side | R | CCW | inlet | outlet |
| | L | CW | inlet | outlet |

NOTES:

1. The auxiliary pump inlet must be connected directly to the reservoir. See page 55 for main pump and auxiliary pump inlet requirements.
2. Case pressure must not exceed inlet pressure by more than 25 psi, 1,7 bar.
3. Maximum allowable inlet (port C) pressure: 200 psi, 13,8 bar.
4. Filters must use bypass valves.
5. Absolute inlet pressure must be increased for the following fluids:
   a. 25% for water glycols
   b. 35% for phosphate esters
6. A check valve in the outlet line between the pump and load is highly recommended where hoses, accumulators or other components may decompress when pump is vented by the compensator.



Tel: +45 63 12 83 00 | Email: ps@hymatik.com | www.hymatik.com | Hvidkaervej 27a, DK-5250 Odense SV, Denmark

### Series 11 & 14 Information

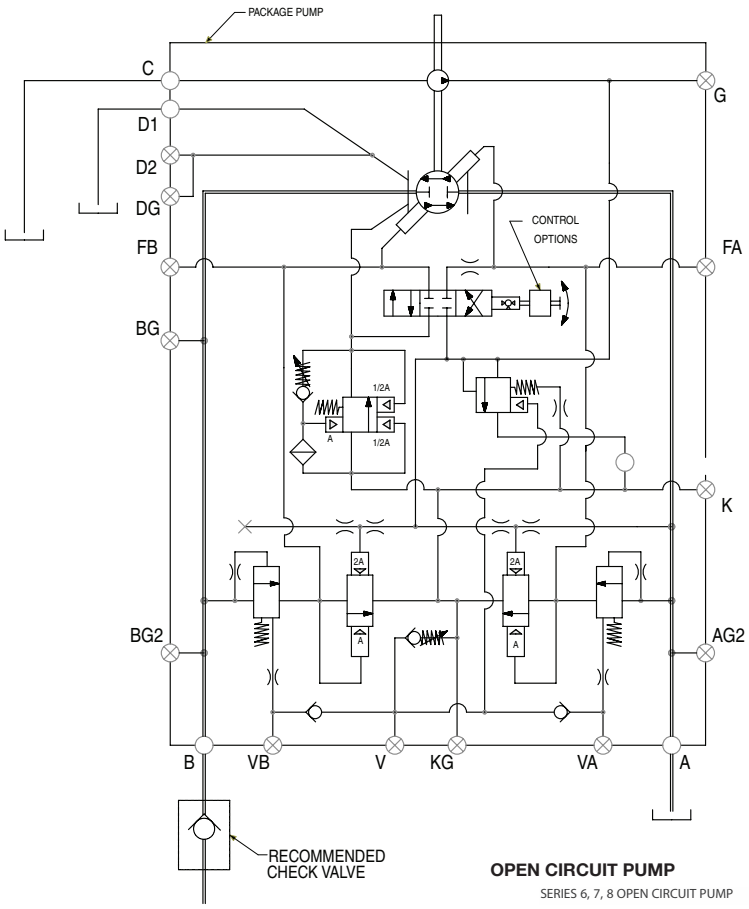


**OPEN CIRCUIT PUMP**

SERIES 6, 7, 8 OPEN CIRCUIT PUMP

| | pump rotation | rotary servo input shaft rotation | port "A" | port "B" |
|---|---|---|---|---|
| input command "A" side | R | CW | inlet | outlet |
| | L | CCW | inlet | outlet |
| input command "B" side | R | CCW | inlet | outlet |
| | L | CW | inlet | outlet |

NOTES:

1. The auxiliary pump inlet must be connected directly to the reservoir. See page 55 for main pump and auxiliary pump inlet requirements.
2. Case pressure must not exceed inlet pressure by more than 25 psi, 1,7 bar.
3. Maximum allowable inlet (port C) pressure: 200 psi, 13,8 bar.
4. Filters must use bypass valves.
5. Absolute inlet pressure must be increased for the following fluids:
   a. 25% for water glycols
   b. 35% for phosphate esters
6. A check valve in the outlet line between the pump and load is highly recommended where hoses, accumulators or other components may decompress when pump is vented by the compensator.



Tel: +45 63 12 83 00 | Email: ps@hymatik.com | www.hymatik.com | Hvidkaervej 27a, DK-5250 Odense SV, Denmark

# GOLD CUP® PUMP CONTROL COMBINATIONS

| | | | | | | | |
|---|---|---|---|---|---|---|---|
| 102 | 2M2 *00 | 2N2 *00 | 402 | 7D6 *00 | 8A2 *00 | 8C2 *00 | 9A2 *00 |
| 104 | 2M2 *01 | 2N2 *01 | 404 | | 8A2 *01 | 8C2 *01 | 9A2 *01 |
| 106 | 2M2 *02 | 2N2 *02 | 406 | | 8A2 *02 | 8C2 *02 | |
| | 2M2 *03 | 2N2 *03 | | | 8A2 *03 | 8C2 *03 | 9A4 *00 |
| 108 | 2M2 *04 | 2N2 *04 | 408 | | 8A2 *04 | | 9A4 *01 |
| | 2M2 *05 | 2N2 *05 | | | | 8C4 *00 | |
| 2A2 | 2M2 *06 | 2N2 *06 | 4A2 | 7D8 *00 | 8A4 *00 | 8C4 *01 | 9A6 *00 |
| 2A4 | 2M2 *07 | 2N2 *07 | 4A4 | | 8A4 *01 | 8C4 *02 | 9A6 *01 |
| 2A6 | | | 4A6 | | 8A4 *02 | 8C4 *03 | |
| | 2M4 *00 | 2N4 *00 | | 7F6 *01 | 8A4 *03 | | 9A7*00 |
| 2A8 | 2M4 *01 | 2N4 *01 | 4A8 | | 8A4 *04 | 8C6 *00 | |
| | 2M4 *02 | 2N4 *02 | | 7F8 *01 | | 8C6 *01 | |
| 2H2 | 2M4 *03 | 2N4 *03 | 4B2 | | 8A6 *00 | 8C6 *02 | 9A8 *00 |
| 2H4 | 2M4 *04 | 2N4 *04 | 4B4 | 7J6 *00 | 8A6 *01 | 8C6 *03 | 9A8 *01 |
| 2H6 | 2M4 *05 | 2N4 *05 | 4B6 | | 8A6 *02 | | |
| | 2M4 *06 | 2N4 *06 | | | 8A6 *03 | | 9C2 *00 |
| 2H8 | 2M4 *07 | 2N4 *07 | 4B8 | | 8A6 *04 | | 9C2 *01 |
| | | | | 7Q8 *00 | | | |
| | 2M6 *00 | 2N6 *00 | 4C2 | | | | 9C4 *00 |
| | 2M6 *01 | 2N6 *01 | 4C4 | 7J8 *00 | | | 9C4 *01 |
| | 2M6 *02 | 2N6 *02 | 4C6 | | | 8C8 *00 | |
| | 2M6 *03 | 2N6 *03 | | | | 8C8 *01 | 9C6 *00 |
| | 2M6 *04 | 2N6 *04 | 4C8 | 7K6 *01 | | 8C8 *02 | 9C6 *01 |
| | 2M6 *05 | 2N6 *05 | | | | 8C8 *03 | |
| | 2M6 *06 | 2N6 *06 | | 7K8 *01 | 8A8 *00 | | |
| | 2M6 *07 | 2N6 *07 | | 7R8 *01 | 8A8 *01 | | |
| | | | | | 8A8 *02 | | |
| | | | | | 8A8 *03 | | 9C8 *00 |
| | | | | | 8A8 *04 | | 9C8 *01 |
| | | | | | | | |
| | | | | | | | |
| | | | | | | | |
| | | | | | | | |
| | | | | | | | |
| | | | | | | | |
| | | | | | | | |
| | 2M8 *00 | 2N8 *00 | | | | | |
| | 2M8 *01 | 2N8 *01 | | | | | |
| | 2M8 *02 | 2N8 *02 | | | | | |
| | 2M8 *03 | 2N8 *03 | | | | | |
| | 2M8 *04 | 2N8 *04 | | | | | |
| | 2M8 *05 | 2N8 *05 | | | | | |
| | 2M8 *06 | 2N8 *06 | | | | | |
| | 2M8 *07 | 2N8 *07 | | | | | |

- Unless otherwise specified on purchase order, the following **factory setting** will be used.

Maximum Stops: Full Displacement (both sides of center pumps)
Minimum Stop: Zero Displacement ("V" units & 2A controls only)
Pressure Compensator Override: 1000 psi nominal
Torque Limiter (**4): P6 @ 1800 rpm = 60 hp nominal
(40% of full torque) P7 @ 1800 rpm = 72.5 hp nominal
P8 @ 1800 rpm = 80 hp nominal
P11 @ 1800 rpm = 110 hp nominal
P14 @ 1800 rpm = 140 hp nominal
P24 @ 1800 rpm = 240 hp nominal
P30 @ 1800 rpm = 300 hp nominal



Tel: +45 63 12 83 00 | Email: ps@hymatik.com | www.hymatik.com | Hvidkaervej 27a, DK-5250 Odense SV, Denmark

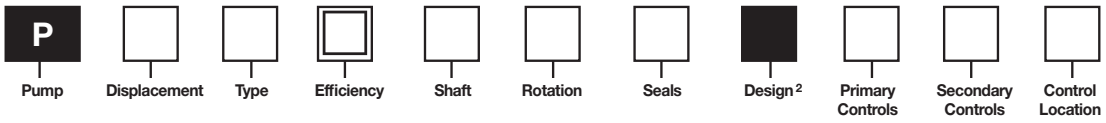


| Code | Displacement |
|---|---|
| 6 | 6.00 in³/rev (98 cc/rev) |
| 7 | 7.25 in³/rev (119 cc/rev) |
| 8 | 8.00 in³/rev (131 cc/rev) |
| 11 | 11.0 in³/rev (180 cc/rev) |
| 14 | 14.0 in³/rev (229 cc/rev) |
| 24 | 24.6 in³/rev (403 cc/rev) |
| 30 | 30.6 in³/rev (501 cc/rev) |

| Code | Type |
|---|---|
| F | Fixed Displacement, Open/Closed Circuit |
| M | Fixed Displacement with High Torque Thru-Drive, Open/Closed Circuit |
| P | Variable Displacement, Closed Circuit |
| X | Variable Displacement with Medium Torque Thru-Drive, Closed Circuit |
| S | Variable Displacement with Medium Torque Thru-Drive & Shuttle Package, Closed Circuit |
| R | Variable Displacement with High Torque Thru-Drive, Closed Circuit |
| L | Variable Displacement with High Torque Thru-Drive & Shuttle Package, Closed Circuit |
| V | Variable Displacement, Open Circuit (P6, 7, 8, 11 & 14 only) |
| D | Variable Displacement, Open & Closed Circuit (P6, 7 & 8 only) |

| Code | Efficiency |
|---|---|
| H | High Efficiency (P24 only) |
| Omit | Standard Efficiency |

| Code | Shaft |
|---|---|
| 2 | Keyed SAE – Mechanical Shaft Seal (Single Lip Seal on P6, 7, 8F/M) |
| 3 | Splined SAE – Mechanical Shaft Seal (Single Lip Seal on P6, 7, 8F/M) |
| 4 | Keyed SAE-D (Mounting & Shaft) – Mechanical Shaft Seal (P6, 7 & 8 only, Single Lip Seal on Fixed Displacement Pumps) |
| -5 | Splined SAE-D (Mounting & Shaft) – Mechanical Shaft Seal (P6, 7 & 8 only, Single Lip Seal on Fixed Displacement Pumps) |
| 7 | Keyed SAE – Double Lip Shaft Seal |
| 8 | Splined SAE – Double Lip Shaft Seal |
| 9 | Keyed (long) SAE – Double Lip Shaft Seal |
| 10 | Keyed (long) SAE – Mechanical Shaft Seal |

| Code | Rotation |
|---|---|
| R | Clockwise |
| L | Counterclockwise |

| Code | Seals |
|---|---|
| 1 | Nitrile (Buna-N) |
| 4 | EPR [1, 3, 4] |
| 5 | Fluorocarbon |

| Code | Primary Controls |
|---|---|
| Omit | None (Fixed Displacement only) |
| 10 | Screw Adjustment (Spring Offset to Maximum Displacement) |
| 2A | Cylinder Control w/Adjustable Maximum Volume Stops |
| 2H | Cylinder Control – 3-Position (Spring Control with Zero Adjustment) |
| 2M | Cylinder Control – 2-Position Electrohydraulic w/Adjustable Maximum Volume Stop (Spring Offset to Minimum Displacement) [1] |
| 2N | Cylinder Control – 3-Position (Spring Centered) Electrohydraulic [1] |
| 40 | Rotary Servo – Spring Centered |
| 4A | Rotary Servo – Spring Centered w/ Adjustable Maximum Volume Stops |
| 4B | Rotary Servo – Spring Centered w/ Automatic Brake Control |
| 4C | Rotary Servo – Spring centered w/Adjustable Maximum Volume Stops & Automatic Brake Control |
| 7D | High IQ with 10 GPM Servo Valve & Volume Indicator [1] |
| 7F | High IQ with 10 GPM Servovalve & 4A (Rotary Servo) Control [1] |
| 7J | High IQ with DF+ Valve & Volume Indicator [1] |
| 7K | High IQ with DF+ Valve & 4A (Rotary Servo) Control [1] |
| 7Q | High IQ with digital DF+ valve and & volume indicator (Only with "8" secondary control) |
| 7R | High IQ with digital DF+ valve and & 4A (rotary servo) control (Only with "8" secondary control) |
| 8A | Hydraulic Stroker w/Adjustable Maximum Volume Stops |
| 8C | Hydraulic Stroker w/Adjustable Maximum Volume Stops & Automatic Brake Control |
| 9A | Electrohydraulic Stroker w/Adjustable Maximum Volume Stops [1] |
| 9C | Electrohydraulic Stroker w/Adjustable Maximum Volume Stops & Automatic Brake Control [1] |
| 9D | Electro-hydraulic stroker w/ adjustable maximum volume stops |

| Code | Secondary Controls |
|---|---|
| Omit | None (Fixed Displacement only) |
| 2 | Volume Indicator |
| 4 | Torque Limiter & Volume Indicator |
| 6 | Cam Position Feedback Potentiometer [1] |
| 7 | Cam Position Feedback RVDT (AC) [1] |
| 8 | Cam Position Feedback R VDT (DC) [1] |
| 9 | Hall Effect Cam Position Feedback [1] |
| E | E - Intelligence Enabled with Sensors (only P, X, S, R, L, V, D Type with only 9A Primary Control) |

| Code | Control Location |
|---|---|
| Omit | None (Fixed Displacement only) |
| A | Primary Control on Port A Side |
| B | Primary Control on Port B Side |

1 Not ATEX approved.
2 Assigned by manufacturer.
3 Pump will be unpainted unless otherwise specified.
4 Not available with "5A" or "5C" primary controls or "E" secondary control.

☐ = Omit if not required



Parker Hannifin Corporation
Hydraulic Pump and Power Systems Division
United States

Tel: +45 63 12 83 00 | Email: ps@hymatik.com | www.hymatik.com | Hvidkaervej 27a, DK-5250 Odense SV, Denmark


Control & Displacement Features


Internal Pump


External Drive


External Mounting


Special Modifications

| Control | Code | Control & Displacement Features |
|---|---|---|
| 2M* & 2N* | 00 | CETOP3, NG6 Valve, 110AC/60Hz with Hirschmann Connector [1] |
| | 01 | CETOP3, NG6 Valve, 12VDC with Hirschmann Connector [1] |
| | 02 | CETOP3, NG6 Valve, 240VAC/50Hz with Hirschmann Connector [1] |
| | 03 | CETOP3, NG6 Valve, 110VAC/60Hz, Wiring Box [1] |
| | 04 | CETOP3, NG6 Valve, 12VDC, Wiring Box [1] |
| | 05 | CETOP3 (D03, NG6) Interface, No Valve [1] |
| | 06 | CETOP3, NG6 Valve, 24VDC with Hirschmann Connector [1] |
| | 07 | CETOP3, NG6 Valve, 110VAC/50Hz with Hirschmann Connector [1] |
| 7** | 00 | Without Manual Override Shutoff [1] (Required for 7D, 7J & 7Q Primary Controls) |
| | 01 | With Manual Override Shutoff [1] (Required for 7F, 7K, & 7R Primary Controls) |
| 8** | 00 | 75-350 PSI (5-24 Bar) |
| | 01 | 75-435 PSI (5-30 Bar) |
| | 02 | 100-380 PSI (7-26 Bar) |
| | 03 | 150-400 PSI (10-28 Bar) |
| | 04 | 75-250 PSI (5-17 Bar) |
| 9** | 00 | 24VDC |
| | 01 | 12VDC |
| All Other | 00 | None [1] |

| Pump | Code | Reduced Displacement |
|---|---|---|
| P**F & P**M | 00 | Standard Cam (19°) |
| | 10 | P6 with 17° Cam – 5.3 in³/rev (87cc/rev)<br>P7 with 17° Cam – 6.4 in³/rec (105 cc/rev)<br>P8 with 17° Cam – 7.1 in³/rev (116 cc/rev)<br>P11 with 17° Cam – 9.7 in³/rev (160 cc/rev)<br>P14 with 17° Cam – 12.5 in³/rev (205 cc/rev)<br>P24 with 17° Cam – 22.0 in³/rev (360 cc/rev)<br>P30 with 17° Cam – 27.2 in³/rev (446 cc/rev) |
| | 20 | P6 with 15° Cam – 4.6 in³/rev (76 cc/rev)<br>P7 with 15° Cam – 5.6 in³/rev (92 cc/rev)<br>P8 with 15° Cam – 6.2 in³/rev (102 cc/rev)<br>P11 with 15° Cam – 8.5 in³/rev (140 cc/rev)<br>P14 with 15° Cam – 10.9 in³/rev (179 cc/rev) |
| | 30 | P6 with 13° Cam – 4.0 in³/rev (66 cc/rev)<br>P7 with 13° Cam – 4.8 in³/rev (79 cc/rev)<br>P8 with 13° Cam – 5.3 in³/rev (88 cc/rev) |

| Code | Internal Pump |
|---|---|
| 0 | 1.07 in³/rev (17.5 cc/rev) – P6, 7, 8P/S/X/V/D & P11, 14V only<br>2.14 in³/rev (35 cc/rev) – P11, 14P/S/X only<br>2.81 in³/rev (46 cc.rev) – P24, 30P/S/X only (standard) |
| 1 | 1.61 in³/rev (26.4 cc/rev) – P24, 30P/S/X only (auxiliary external replenishing flow required) |
| 2 | 1.05 in³/rev (17.2 cc/rev) – P24, 30P/S/X only (auxiliary external replenishing flow required) |
| 3 | 3.56 in³/rev (58.3 cc/rev) – P24, 30P/S/X only |
| 4 | 4.84 in³/rev (79.3 cc/rev) – P24, 30P/S/X only |
| 5 | 5.42 in³/rev (88.8 cc/rev) – P24, 30P/S/X only |
| 6 | 6.10 in³/rev (100.0 cc/rev) – P24, 30P/S/X only |
| X | No Internal Pump (standard on P*R/L/F/M) |

| Code | External Drive |
|---|---|
| Omit | None [1] |
| M | Blanking plate – for P6, 7, 8, 11, 14S/X only |
| A | SAE-A (SAE 82-2) – P6, 7, 8, 11, 14S/X/R/L/M only |
| B | SAE-B (SAE 101-2) – P6, 7, 8, 11, 14, 24, 30/S/X/R/L/M<br>SAE-B (SAE 101-4) – P11, 14, 24, 30R/L/M |
| C | SAE-C (SAE 127-2) – P6, 7, 8, 11, 14, 24, 30R/L/M & P24, 30S/X SAE-C (SAE 127-4) – P11, 14, 24, 30R/L/M |
| D | SAE-D (SAE 152-4) – P11, 14, 24, 30R/L/M only |
| E | SAE-E (SAE 165-4) – P11, 14, 24, 30R/L/M only |
| F | SAE-F (SAE 177-4) – P24, 30R/L/M only |

| Code | External Mounting |
|---|---|
| Omit | No External Drive Required |
| 0 | No External Pump Mounted |
| 1 | External Pump Mounted (must be separately specified) – Requires Special Modification "-M2" [1] |
| 2 | ATEX Externally Mounted Pump |

| Code | Special Modifications |
|---|---|
| Omit | None |
| NP | No Paint [1] |
| EX | ATEX APPROVED PUMP without the "E" secondary control (May contain additional modifications. Contact tech support.) |
| M5 | Other Special Modification (example: bronze caged barrel bearing for low viscosity fluids, tandem pumps, etc.) [1] |

 = Omit if not required



Tel: +45 63 12 83 00 | Email: ps@hymatik.com | www.hymatik.com | Hvidkaervej 27a, DK-5250 Odense SV, Denmark

# Notes



Parker Hannifin Corporation
Hydraulic Pump and Power Systems Division
United States

Tel: +45 63 12 83 00 | Email: ps@hymatik.com | www.hymatik.com | Hvidkaervej 27a, DK-5250 Odense SV, Denmark

# GOLD CUP® MOTOR CONTROL COMBINATIONS

| | | | | | | |
|---|---|---|---|---|---|---|
| 2A0 | | *2M3 *0 | | 8A0 *0 | | 9A0 *0 |
| *2A3 | | *2M3 *1 | | 8A0 *1 | | 9A0 *1 |
| *2A5 | | *2M3 *2 | | | | |
| 2A6 | | *2M3 *3 | | 8A3 *0 | | 9A3 *0 |
| | | *2M3 *4 | | 8A3 *1 | | 9A3 *1 |
| 2A8 | | *2M3 *5 | | | | |
| | | *2M3 *6 | | 8A5 *0 | | 9A5 *0 |
| 2M0 *0 | | | | 8A5 *1 | | 9A5 *1 |
| 2M0 *1 | | | | | | |
| 2M0 *2 | | *2M5 *0 | | 8A6 *0 | | 9A6 *0 |
| 2M0 *3 | | *2M5 *1 | | 8A6 *1 | | 9A6 *1 |
| 2M0 *4 | | *2M5 *2 | | | | |
| 2M0 *5 | | *2M5 *3 | | | | |
| 2M0 *6 | | *2M5 *4 | | | | |
| | | *2M5 *5 | | | | |
| | | *2M5 *6 | | 8A8 *0 | | 9A8 *0 |
| | | | | 8A8 *1 | | 9A8 *1 |
| | | | | | | |
| | | *2M6 *0 | | | | 9D0*0 |
| | | *2M6 *1 | | | | 9D081 |
| | | *2M6 *2 | | | | |
| | | *2M6 *3 | | | | |
| | | *2M6 *4 | | | | |
| | | *2M6 *5 | | | | |
| | | *2M6 *6 | | | | |
| | | | | | | |
| | | | | | | |
| | | | | | | |
| | | | | | | |
| | | | | | | |
| | | | | | | |
| | | | | | | |
| | | *2M8 *0 | | | | |
| | | *2M8 *1 | | | | |
| | | *2M8 *2 | | | | |
| | | *2M8 *3 | | | | |
| | | *2M8 *4 | | | | |
| | | *2M8 *5 | | | | |
| | | *2M8 *6 | | | | |
| | | | | | | |

Not available for M24 or M30

Unless otherwise specified on purchase order, the following **factory setting** will be used.
Maximum Stop: Full Displacement
Minimum Stop: Approximately 30% Displacement
Reverse Pressure Compensator Override (**3 & **5):
1000 psi nominal



Tel: +45 63 12 83 00 | Email: ps@hymatik.com | www.hymatik.com | Hvidkaervej 27a, DK-5250 Odense SV, Denmark




| Code | Displacement |
|---|---|
| 6 | 6.00 in³/rev (98cc/rev) |
| 7 | 7.25 in³/rev (119 cc/rev) |
| 8 | 8.00 in³/rev (131 cc/rev) |
| 11 | 11.0 in³/rev (180 cc/rev) |
| 14 | 14.0 in³/rev (229 cc/rev) |
| 24 | 24.6 in³/rev (403 cc/rev) |
| 30 | 30.6 in³/rev (501 cc/rev) |

| Code | Type |
|---|---|
| F | Fixed Displacement |
| G | Fixed Displacement with Shuttle Package |
| M | Fixed Displacement with Thru-Drive |
| N | Fixed Displacement with Thru-Drive & Shuttle Package |
| V | Variable Displacement |
| H | Variable Displacement with Shuttle Package |
| R | Variable Displacement with Thru-Drive |
| L | Variable Displacement with Thru-Drive & Shuttle Package |

| Code | Efficiency |
|---|---|
| H | High Efficiency (M24 only) |
| Omit | Standard Efficiency |

| Code | Shaft |
|---|---|
| 2 | Keyed SAE – Mechanical Shaft Seal (Single Lip Seal on M6, 7, 8F/G/M/N) |
| 3 | Splined SAE – Mechanical Shaft Seal (Single Lip Seal on M6, 7, 8F/G/M/N) |
| 4 | Keyed SAE-D (Mounting & Shaft) – Mechanical Shaft Seal (M6, 7 & 8 only, Single Lip Seal on Fixed Displacement Motors) |
| 5 | Splined SAE-D (Mounting & Shaft) – Mechanical Shaft Seal (P6, 7 & 8 only, Single Lip Seal on Fixed Displacement Motors) |
| 7 | Keyed SAE – Double Lip Shaft Seal |
| 8 | Splined SAE – Double Lip Shaft Seal |
| 9 | Keyed (long) SAE – Double Lip Shaft Seal |
| 10 | Keyed (long) SAE – Mechanical Shaft Seal |

| Code | Seals |
|---|---|
| 1 | Nitrile (Buna-N) |
| 4 | EPR 3 |
| 5 | Fluorocarbon |

| Code | Primary Controls |
|---|---|
| Omit | None (Fixed Displacement only) |
| 2A | Cylinder Control w/Adjustable Maximum Volume Stops |
| 2M | Cylinder Control – 2-Position Electrohydraulic w/Adjustable Maximum Volume Stop (Spring Offset to Maximum Displacement)1 |
| 8A | Hydraulic Stroker w/Adjustable Maximum Volume Stops |
| 9A | Electrohydraulic Stroker w/ Adjustable Maximum Volume Stops1 |

| Code | Secondary Controls |
|---|---|
| Omit | None (Fixed Displacement only) |
| 0 | Volume Indicator |
| 3 | Reverse Compensator (spring offset to maximum displacement) + Volume Indicator |
| 5 | Reverse Compensator (spring offset to minimum displacement) + Volume Indicator |
| 6 | Cam Position Feedback Potentiometer1 |
| 7 | Cam Position Feedback RVDT (AC)1 |
| 8 | Cam Position Feedback RVDT (DC)1 |
| U | Reverse Compensator (3) + Cam Position Feedback Potentiometer (6)1 |
| W | Reverse Compensator (3) + Cam Position Feedback RVDT (8)1 |
| X | Reverse Compensator (5) + Cam Position Feedback Potentiometer (6)1 |
| Z | Reverse Compensator (5) + Cam Position Feedback RVDT (8)1 |

| Code | Control Location |
|---|---|
| Omit | None (Fixed Displacement only) |
| A | Primary Control on Port A Side |
| B | Primary Control on Port B Side |

1 Not ATEX approved.
2 Assigned by manufacturer.
3 Motor will be unpainted unless otherwise specified.

= Omit if not required



Parker Hannifin Corporation
Hydraulic Pump and Power Systems Division
United States

Tel: +45 63 12 83 00 | Email: ps@hymatik.com | www.hymatik.com | Hvidkaervej 27a, DK-5250 Odense SV, Denmark


Control & Displacement Features


Shuttle Valve Features


External Drive


External Mounting


Special Modifications

| Control | Code | Control & Displacement Features |
|---|---|---|
| 2M | 0 | CETOP3, NG6 Valve, 110AC/60Hz with Hirschmann Connector[1] |
| | 1 | CETOP3, NG6 Valve, 12VDC with Hirschmann Connector[1] |
| | 2 | CETOP3, NG6 Valve, 240VAC/50Hz with Hirschmann Connector[1] |
| | 3 | CETOP3, NG6 Valve, 110VAC/60Hz, Wiring Box[1] |
| | 4 | CETOP3, NG6 Valve, 12VDC, Wiring Box[1] |
| | 5 | CETOP3 (D03, NG6) Interface, No Valve[1] |
| | 6 | CETOP3, NG6 Valve, 24VDC with Hirschmann Connector[1] |
| | 7 | CETOP3, NG6 Valve, 110VAC/50Hz with Hirschmann Connector[1] |
| 8A | 0 | 75-250 PSI (5-17 Bar) |
| | 1 | 250-450 PSI (17-31 Bar) |
| 9A | 0 | 24VDC[1] |
| | 1 | 12VDC[1] |
| All Other | 0 | None |

| Motor | Code | Reduced Displacement |
|---|---|---|
| M*F<br>M*G<br>M*M<br>M*N | 0 | Standard Cam (19°) |
| | 1 | M6 with 17° Cam – 5.3 $in^3$/rev (87cc/rev)<br>M7 with 17° Cam – 6.4 $in^3$/rec (105 cc/rev)<br>M8 with 17° Cam – 7.1 $in^3$/rev (116 cc/rev)<br>M11 with 17° Cam – 9.7 $in^3$/rev (160 cc/rev)<br>M14 with 17° Cam – 12.5 $in^3$/rev (205 cc/rev)<br>M24 with 17° Cam – 22.0 $in^3$/rev (360 cc/rev)<br>M30 with 17° Cam – 27.2 $in^3$/rev (446 cc/rev) |
| | 2 | M6 with 15° Cam – 4.6 $in^3$/rev (76 cc/rev)<br>M7 with 15° Cam – 5.6 $in^3$/rev (92 cc/rev)<br>M8 with 15° Cam – 6.2 $in^3$/rev (102 cc/rev)<br>M11 with 15° Cam – 8.5 $in^3$/rev (140 cc/rev)<br>M14 with 15° Cam – 10.9 $in^3$/rev (179 cc/rev) |
| | 3 | M6 with 13° Cam – 4.0 $in^3$/rev (66 cc/rev)<br>M7 with 13° Cam – 4.8 $in^3$/rev (79 cc/rev)<br>M8 with 13° Cam – 5.3 $in^3$/rev (88 cc/rev) |

| Code | Shuttle Valve Features |
|---|---|
| Omit | M*F/M/V/R Motors only |
| 0 | Without Orifices |
| 2 | With Orifices |

| Code | External Drive |
|---|---|
| Omit | None (M*F/G/V/H units only) |
| A | SAE-A (SAE 82-2) – M6, 7, 8, 11, 14M/N/R/L only |
| B | SAE-B (SAE 101-2) – M6, 7, 8M/N/R/L<br>SAE-B (SAE 101-2 & 101-4) – M11, 14, 24, 30M/N/R/L |
| C | SAE-C (SAE 127-2) – M6, 7, 8M/N/R/L<br>SAE-C (SAE 127-2 & 127-4) – M11, 14, 24, 30M/N/R/L |
| D | SAE-D (SAE 152-4) – M11, 14, 24, 30M/N/R/L only |
| E | SAE-E (SAE 165-4) – M11, 14, 24, 30M/N/R/L only |
| F | SAE-F (SAE 177-4) – M24, 30M/N/R/L only |
| M | Blanking Plate-less Coupling |

| Code | External Mounting |
|---|---|
| 0 | No External Motor Mounted |
| 1 | External Motor Mounted (must be separately specified) – Requires Special Modification "-M2" |
| 2 | ATEX Externally Mounted Motor |

| Code | Special Modifications |
|---|---|
| Omit | None |
| NP | No Paint |
| M5 | Other Special Modification (example: bronze caged barrel bearing for low viscosity fluids, tandem motors, etc.) |
| EX | ATEX APPROVED (May contain additional modifications. Contact tech support.) |

 = Omit if not required



Tel: +45 63 12 83 00 | Email: ps@hymatik.com | www.hymatik.com | Hvidkaervej 27a, DK-5250 Odense SV, Denmark

The items described in this document and other documents and descriptions provided by Parker Hannifin Corporation, Hydraulics Group, and its authorized distributors ("Seller") are hereby offered for sale at prices to be established by Seller. This offer and its acceptance by any customer ("Buyer") shall be governed by all of the following Terms and Conditions. Buyer's order for any item described in its document, when communicated to Seller verbally, or in writing, shall constitute acceptance of this offer. All goods or work described will be referred to as "Products".

**1. Terms and Conditions.** Seller's willingness to offer Products, or accept an order for Products, to or from Buyer is expressly conditioned on Buyer's assent to these Terms and Conditions and to the terms and conditions found on-line at www.parker.com/saleterms/. Seller objects to any contrary or additional term or condition of Buyer's order or any other document issued by Buyer.

**2. Price Adjustments; Payments.** Prices stated on the reverse side or preceding pages of this document are valid for 30 days. After 30 days, Seller may change prices to reflect any increase in its costs resulting from state, federal or local legislation, price increases from its suppliers, or any change in the rate, charge, or classification of any carrier. The prices stated on the reverse or preceding pages of this document do not include any sales, use, or other taxes unless so stated specifically. Unless otherwise specified by Seller, all prices are F.O.B. Seller's facility, and payment is due 30 days from the date of invoice. After 30 days, Buyer shall pay interest on any unpaid invoices at the rate of 1.5% per month or the maximum allowable rate under applicable law.

**3. Delivery Dates; Title and Risk; Shipment.** All delivery dates are approximate and Seller shall not be responsible for any damages resulting from any delay. Regardless of the manner of shipment, title to any products and risk of loss or damage shall pass to Buyer upon tender to the carrier at Seller's facility (i.e., when it's on the truck, it's yours). Unless otherwise stated, Seller may exercise its judgment in choosing the carrier and means of delivery. No deferment of shipment at Buyers' request beyond the respective dates indicated will be made except on terms that will indemnify, defend and hold Seller harmless against all loss and additional expense. Buyer shall be responsible for any additional shipping charges incurred by Seller due to Buyer's changes in shipping, product specifications or in accordance with Section 13, herein.

**4. Warranty.** Seller warrants that the Products sold hereunder shall be free from defects in material or workmanship for a period of eighteen months from the date of delivery to Buyer. The prices charged for Seller's products are based upon the exclusive limited warranty stated above, and upon the following disclaimer: DISCLAIMER OF WARRANTY: THIS WARRANTY COMPRISES THE SOLE AND ENTIRE WARRANTY PERTAINING TO PRODUCTS PROVIDED HEREUNDER. SELLER DISCLAIMS ALL OTHER WARRANTIES, EXPRESS AND IMPLIED, INCLUDING MERCHANTABILITY AND FITNESS FOR A PARTICULAR PURPOSE.

**5. Claims; Commencement of Actions.** Buyer shall promptly inspect all Products upon delivery. No claims for shortages will be allowed unless reported to the Seller within 10 days of delivery. No other claims against Seller will be allowed unless asserted in writing within 60 days after delivery or, in the case of an alleged breach of warranty, within 30 days after the date within the warranty period on which the defect is or should have been discovered by Buyer. Any action based upon breach of this agreement or upon any other claim arising out of this sale (other than an action by Seller for any amount due to Seller from Buyer) must be commenced within thirteen months from the date of tender of delivery by Seller or, for a cause of action based upon an alleged breach of warranty, within thirteen months from the date within the warranty period on which the defect is or should have been discovered by Buyer.

**6. LIMITATION OF LIABILITY.** UPON NOTIFICATION, SELLER WILL, AT ITS OPTION, REPAIR OR REPLACE A DEFECTIVE PRODUCT, OR REFUND THE PURCHASE PRICE. IN NO EVENT SHALL SELLER BE LIABLE TO BUYER FOR ANY SPECIAL, INDIRECT, INCIDENTAL OR CONSEQUENTIAL DAMAGES ARISING OUT OF, OR AS THE RESULT OF, THE SALE, DELIVERY, NON-DELIVERY, SERVICING, USE OR LOSS OF USE OF THE PRODUCTS OR ANY PART THEREOF, OR FOR ANY CHARGES OR EXPENSES OF ANY NATURE INCURRED WITHOUT SELLER'S WRITTEN CONSENT, EVEN IF SELLER HAS BEEN NEGLIGENT, WHETHER IN CONTRACT, TORT OR OTHER LEGAL THEORY. IN NO EVENT SHALL SELLER'S LIABILITY UNDER ANY CLAIM MADE BY BUYER EXCEED THE PURCHASE PRICE OF THE PRODUCTS.

**7. Contingencies.** Seller shall not be liable for any default or delay in performance if caused by circumstances beyond the reasonable control of Seller.

**8. User Responsibility.** The user, through its own analysis and testing, is solely responsible for making the final selection of the system and Product and assuring that all performance, endurance, maintenance, safety and warning requirements of the application are met. The user must analyze all aspects of the application and follow applicable industry standards and Product information. If Seller provides Product or system options, the user is responsible for determining that such data and specifications are suitable and sufficient for all applications and reasonably foreseeable uses of the Products or systems.

**9. Loss to Buyer's Property.** Any designs, tools, patterns, materials, drawings, confidential information or equipment furnished by Buyer or any other items which become Buyer's property, may be considered obsolete and may be destroyed by Seller after two consecutive years have elapsed without Buyer placing an order for the items which are manufactured using such property. Seller shall not be responsible for any loss or damage to such property while it is in Seller's possession or control.

**10. Special Tooling.** A tooling charge may be imposed for any special tooling, including without limitation, dies, fixtures, molds and patterns, acquired to manufacture Products. Such special tooling shall be and remain Seller's property notwithstanding payment of any charges by Buyer. In no event will Buyer acquire any interest in apparatus belonging to Seller which is utilized in the manufacture of the Products, even if such apparatus has been specially converted or adapted for such manufacture and notwithstanding any charges paid by Buyer. Unless otherwise agreed, Seller shall have the right to alter, discard or otherwise dispose of any special tooling or other property in its sole discretion at any time.

**11. Buyer's Obligation; Rights of Seller.** To secure payment of all sums due or otherwise, Seller shall retain a security interest in the goods delivered and this agreement shall be deemed a Security Agreement under the Uniform Commercial Code. Buyer authorizes Seller as its attorney to execute and file on Buyer's behalf all documents Seller deems necessary to perfect its security interest. Seller shall have a security interest in, and lien upon, any property of Buyer in Seller's possession as security for the payment of any amounts owed to Seller by Buyer.

**12. Improper Use and Indemnity.** Buyer shall indemnify, defend, and hold Seller harmless from any claim, liability, damages, lawsuits, and costs (including attorney fees), whether for personal injury, property damage, patent, trademark or copyright infringement or any other claim, brought by or incurred by Buyer, Buyer's employees, or any other person, arising out of: (a) improper selection, improper application or other misuse of Products purchased by Buyer from Seller; (b) any act or omission, negligent or otherwise, of Buyer; (c) Seller's use of patterns, plans, drawings, or specifications furnished by Buyer to manufacture Product; or (d) Buyer's failure to comply with these terms and conditions. Seller shall not indemnify Buyer under any circumstance except as otherwise provided.

**13. Cancellations and Changes.** Orders shall not be subject to cancellation or change by Buyer for any reason, except with Seller's written consent and upon terms that will indemnify, defend and hold Seller harmless against all direct, incidental and consequential loss or damage. Seller may change product features, specifications, designs and availability with notice to Buyer.

**14. Limitation on Assignment.** Buyer may not assign its rights or obligations under this agreement without the prior written consent of Seller.

**15. Entire Agreement.** This agreement contains the entire agreement between the Buyer and Seller and constitutes the final, complete and exclusive expression of the terms of the agreement. All prior or contemporaneous written or oral agreements or negotiations with respect to the subject matter are herein merged.

**16. Waiver and Severability.** Failure to enforce any provision of this agreement will not waive that provision nor will any such failure prejudice Seller's right to enforce that provision in the future. Invalidation of any provision of this agreement by legislation or other rule of law shall not invalidate any other provision herein. The remaining provisions of this agreement will remain in full force and effect.

**17. Termination.** This agreement may be terminated by Seller for any reason and at any time by giving Buyer thirty (30) days written notice of termination. In addition, Seller may by written notice immediately terminate this agreement for the following: (a) Buyer commits a breach of any provision of this agreement (b) the appointment of a trustee, receiver or custodian for all or any part of Buyer's property (c) the filing of a petition for relief in bankruptcy of the other Party on its own behalf, or by a third party (d) an assignment for the benefit of creditors, or (e) the dissolution or liquidation of the Buyer.

**18. Governing Law.** This agreement and the sale and delivery of all Products hereunder shall be deemed to have taken place in and shall be governed and construed in accordance with the laws of the State of Ohio, as applicable to contracts executed and wholly performed therein and without regard to conflicts of laws principles. Buyer irrevocably agrees and consents to the exclusive jurisdiction and venue of the courts of Cuyahoga County, Ohio with respect to any dispute, controversy or claim arising out of or relating to this agreement. Disputes between the parties shall not be settled by arbitration unless, after a dispute has arisen, both parties expressly agree in writing to arbitrate the dispute.

**19. Indemnity for Infringement of Intellectual Property Rights.** Seller shall have no liability for infringement of any patents, trademarks, copyrights, trade dress, trade secrets or similar rights except as provided in this Section. Seller will defend and indemnify Buyer against allegations of infringement of U.S. patents, U.S. trademarks, copyrights, trade dress and trade secrets ("Intellectual Property Rights"). Seller will defend at its expense and will pay the cost of any settlement or damages awarded in an action brought against Buyer based on an allegation that a Product sold pursuant to this Agreement infringes the Intellectual Property Rights of a third party. Seller's obligation to defend and indemnify Buyer is contingent on Buyer notifying Seller within ten (10) days after Buyer becomes aware of such allegations of infringement, and Seller having sole control over the defense of any allegations or actions including all negotiations for settlement or compromise. If a Product is subject to a claim that it infringes the Intellectual Property Rights of a third party, Seller may, at its sole expense and option, procure for Buyer the right to continue using the Product, replace or modify the Product so as to make it noninfringing, or offer to accept return of the Product and return the purchase price less a reasonable allowance for depreciation. Notwithstanding the foregoing, Seller shall have no liability for claims of infringement based on information provided by Buyer, or directed to Products delivered hereunder for which the designs are specified in whole or part by Buyer, or infringements resulting from the modification, combination or use in a system of any Product sold hereunder. The foregoing provisions of this Section shall constitute Seller's sole and exclusive liability and Buyer's sole and exclusive remedy for infringement of Intellectual Property Rights.

**20. Taxes.** Unless otherwise indicated, all prices and charges are exclusive of excise, sales, use, property, occupational or like taxes which may be imposed by any taxing authority upon the manufacture, sale or delivery of Products.

**21. Equal Opportunity Clause.** For the performance of government contracts and where dollar value of the Products exceed $10,000, the equal employment opportunity clauses in Executive Order 11246, VEVRAA, and 41 C.F.R. §§ 60-1.4(a), 60-741.5(a), and 60-250.4, are hereby incorporated.



Tel: +45 63 12 83 00 | Email: ps@hymatik.com | www.hymatik.com | Hvidkaervej 27a, DK-5250 Odense SV, Denmark

| | |
|---|---|
| **October 8, 2021** | • Page 4: Updated Rear Drive Torque Capacity |
| **September 23, 2021** | • Pages 70, 71, 78 & 79: Gold Cup - IE added as new control option<br>• Page 70: Updated 700 Schematic<br>• Cover Page: Updated product picture with Gold Cup - IE |
| **March 10, 2021** | • Pages 77 & 79: Modifications made to 700 Model Key Sheet |
| **August 2020** | • Removed 500 stroker control content from the catalog, added Hi-IQ 7Q & 7R control options, added **9 secondary control option. |
| **October 21, 2014** | • Cover page: New catalog date to replace<br>• Page 2: Update to page 8 data<br>• Page 4: Added SAE “D” option for R & L type units<br>• Page 7: Revised text to paragraph on “Mounting”<br>• Page 24: Updated Adaptor port orientation for<br>• Pages 22-28 Dimensions (Less Controls)<br>• Page 79: Change 2M control to read Spring Offset to Minimum instead of Maximum<br>• Added “Revisions” page |
| **December 29, 2021** | • Page 69: Updated Coil Resistance Numbers |
| **February 14, 2022** | • Pages 79 & 83: Other Special Modification changed from M2 to M5 |

**⚠ WARNING**
The products described in this catalog can expose you to chemicals, including Lead, which is known to the State of California to cause cancer and birth defects or other reproductive harm. For more information go to www.p65warnings.ca.gov.



Tel: +45 63 12 83 00 | Email: ps@hymatik.com | www.hymatik.com | Hvidkaervej 27a, DK-5250 Odense SV, Denmark

© 2022 Parker Hannifin Corporation

HY28-2667-01/GC/NA,EU 02/2022

Parker Hannifin Corporation
**Hydraulic Pump and Power Systems Division**
14249 Industrial Pkwy.
Marysville, OH 43040
phone 937 644 3915
fax 937 642 3738
www.parker.com/hps