

HYDRAULIC SEALS

Parker Prädifa

Precision seals for hydraulics

Elastomer seals are functionally reliable components of fluid engineering equipment and systems. Their advanced level of sealing technology is the result of many years of development and field experience gained in the various sectors of mechanical engineering. Hydraulic sealing systems are used in a wide range of different applications, from construction machinery, which has to perform under toughest pressure, temperature and media conditions, all the way to industrial water hydraulics in pressure intensifiers operating under extreme requirements with regard to lubrication, wear and corrosion.



Parker Hannifin offers a comprehensive product range to manufacturers of hydraulics equipment, based on decades of experience in sealing technology. Our application engineering consulting service assists customers with the selection of the suitable seal geometry and optimum compound. Our compound labs develop new materials and modify existing compounds for new areas of application. Computer-aided simulation and analytical tools allow us to predict the functional performance characteristics and service life of our products, thus reducing development times and costs. Our extensive physical lab facilities are used for testing sealing elements and systems under conditions resembling their use in the field.

An extensive portfolio of sealing profiles, compounds and dimensions enables design engineers to find the suitable sealing system for any application. Our standard range is complemented by a host of special developments, created in close collaboration with our customers.
The profile series presented in this catalogue consider existing ISO standards for installation spaces of piston seals, rod seals and wipers. The concrete contributions which Parker engineers continually make through their membership in respective standardisation committees ensure that the dimensional standards established for these series conform to field requirements, now and in future.

Tel: +45 63 12 83 00 | Email: ps@hymatik.com | www.hymatik.com | Hvidkaervej 27a, DK-5250 Odense SV, Denmark

Parker´s safety programme

Warning - User Responsibility

This document and other information from Parker Hannifin Corporation, its subsidiaries and authorized distributors provide product or system options for further investigation by users having technical expertise.

The user, through its own analysis and testing, is solely responsible for making the final selection of the system and components and assuring that all performance, endurance, maintenance, safety and warning requirements of the application are met. The user must analyze all aspects of the application, follow applicable industry standards, and follow the information concerning the product in the current product catalogue and in any materials provided by Parker or its subsidiaries or authorized distributors.
To the extent that Parker or its subsidiaries or authorized distributors provide component or system options based upon data or specifications provided by the user, the user is responsible for determining that such data and specifications are suitable and sufficient for all applications and responsibly foreseeable uses of the components or systems.

Range of Application

Our seals may only be used within the application parameters stated in our documents as regards compatibility with contact media, pressures, temperatures and time of storage. Application or use outside of the specified application parameters as well as the selection of different compounds by mistake may result in damage to life, the environment and/or equipment and facilities.

The information contained in our publications is based on know-how developed over decades of experience in the manufacturing and application of seals. Despite this experience, unknown factors arising out of the practical application of seals may considerably affect the overall applicability of this information in such a way that the recommendations provided herein are not to be considered generally binding.

The data for operating pressure, operating temperature, and surface speed stated in the columns represent maximum values and are interrelated. Under extreme working conditions it is recommended not to use all maximum values simultaneously.

For special requirements (pressure, temperature, speed, etc.) please contact our consultancy service, so that suitable materials and/or designs can be recommended.

Compatibility of Seals and Operating Media / Cleaning Agents

Due to the great diversity of operational parameters affecting fluidic devices and their impact on seals, it is absolutely imperative that manufacturers of these devices approve seals for functional and operational suitability under field conditions.

Furthermore, in view of the consistent increase of newly available media used as hydraulic oils, lubricants, and cleaning agents, special attention is invited to the aspect of compatibility with sealing elastomers currently in use.

Additives contained in base media in order to enhance certain functional characteristics may affect compatibility characteristics of sealing materials.

For this reason, it is imperative that any product equipped with our seals be tested for compatibility with operational media or cleaning agents approved or specified by you either at your plant or by means of field tests prior to any field use.

We kindly ask you to comply with this notice since, as a manufacturer of seals, we are not in a position, as a matter of principle, to perform simulations of any and all conditions present in the final application nor of knowing the composition of the operational media and cleaning agents used.

Design Modifications

We reserve the right to make design modifications without prior notification.

Prototypes and Samples

Prototypes and samples are produced from experimental moulds. The subsequent series production may differ in terms of production techniques from the prototype production unless specific agreement to the contrary was reached beforehand.

Delivery and Services

The delivery guarantee (availability of moulds) for individual dimensions of our range of products is limited to a period of 7 years.

Damaged moulds, including standard items, can only be replaced in case of sufficient demand. Most of the dimensions stated in this catalogue are normally (but not as a matter of course) available ex stock.

For the production of smaller quantities, special compounds, and in case of special production procedures, we reserve the right of charging a prorated share of set-up costs.

All deliveries and services are subject to our terms.

Quality Systems

Our manufacturing sites are certified according to ISO 9001 and/or IAT16949 and/or EN9100.

Copyright

All rights reserved by Parker Hannifin Corporation. Extracts may only be taken with permission. Modification rights reserved.

Validity

This edition supersedes all prior documents.

Tel: +45 63 12 83 00 | Email: ps@hymatik.com | www.hymatik.com | Hvidkaervej 27a, DK-5250 Odense SV, Denmark

Contents

Contents

General information		6
	Sealing systems in typical applications	6
	Sealing compounds for fluid technology	8
	General installation guidelines for piston seals	18
	General installation guidelines for rod seals	20
	Maximum gap allowance	22
Wipers		25
Guiding elements		51
Rod seals		71
Piston seals		99
Other seal products		123
	O-rings	124
	Anti-extrusion rings	130
	Static radial seal	134
	Flange seals	136
	Rotary seals	139
	Sealing sets for piston accumulators	149

Tel: +45 63 12 83 00 | Email: ps@hymatik.com | www.hymatik.com | Hvidkaervej 27a, DK-5250 Odense SV, Denmark

Sealing systems in typical applications

Mobile hydraulics

Excavator

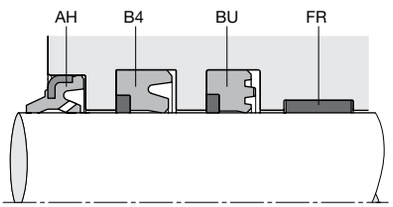

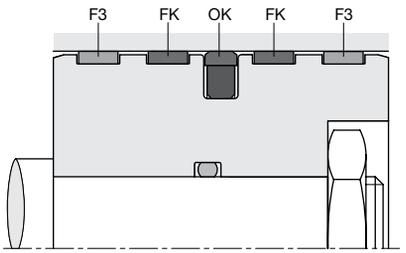

Mini excavator

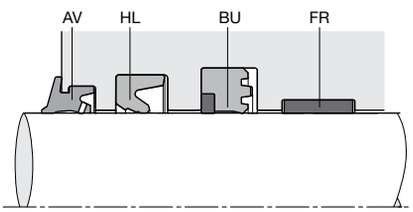

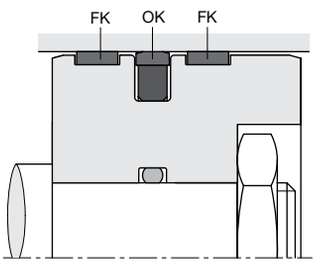

Wheel loader

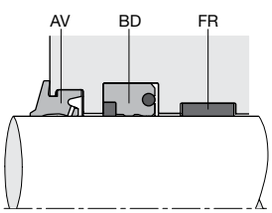

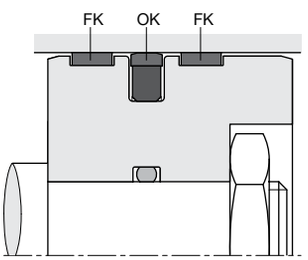

Bulldozer

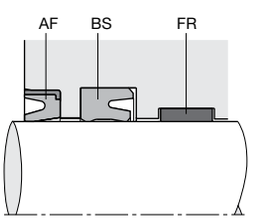

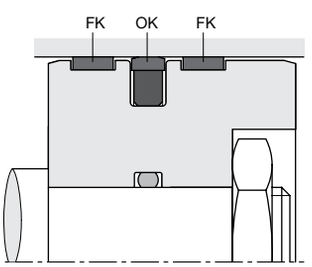

Backhoe

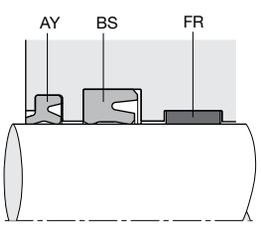

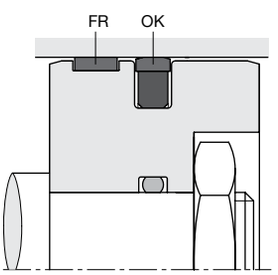

Tel: +45 63 12 83 00 | Email: ps@hymatik.com | www.hymatik.com | Hvidkaervej 27a, DK-5250 Odense SV, Denmark

Sealing systems in typical applications

Fork lift

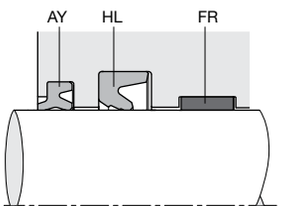

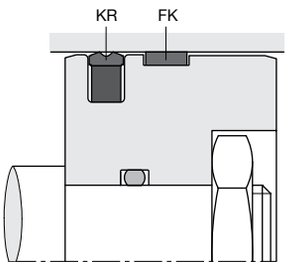

Skid steer

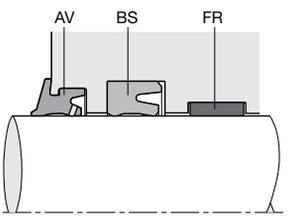

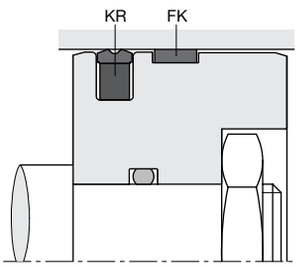

Stationary hydraulics

Industrial cylinder

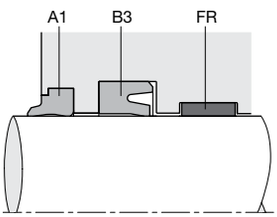

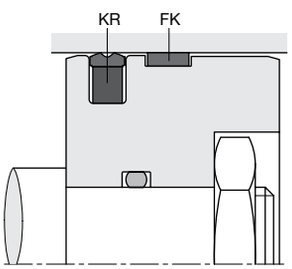

Machine tool

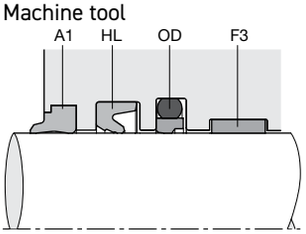

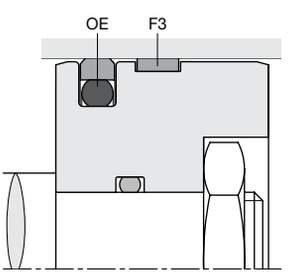

Injection moulding machine

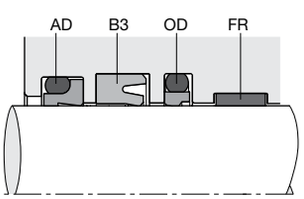

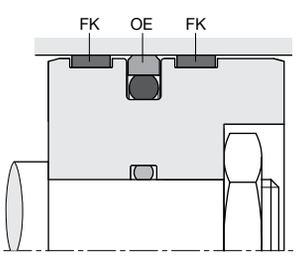

Tel: +45 63 12 83 00 | Email: ps@hymatik.com | www.hymatik.com | Hvidkaervej 27a, DK-5250 Odense SV, Denmark

Sealing compounds for fluid technology

Compound code	Polymer base	Shore hard-ness[1]	Colour	Temperature range[2] (°C)			T-Onset (°C)	TR 10 (°C)	Media compatibility									
				min.	max.	short			Mineral oil	Poly-α-Olefin	HEPR	HEPG	HETG	HEES	DOT-3 / -4	HFAE, HFAS, HFB	HFC	
Rubber not resistant to mineral oil																		
E0540	EPDM	80A ±5	black	-50	+150	170	< -45					·			·			
E3676	EPDM	75A ±5	black	-50	+150	200	< -45					·			·			
E9135	EPDM	80A ±5	black	-50	+150	200	< -45					·			·			
E9180	EPDM	75A ±5	black	-50	+150	170	< -45					·			·			
Rubber resistant to mineral oil																		
V3656	FKM	70A ±5	green	-20	+200	230	< -9		·	·	·		·	·		·		
V9953	FKM	70A ±5	black	-30	+200	230	< -28		·	·	·	·	·	·		·	·	
V0747	FKM	75A ±5	black	-20	+200	230	< -10		·	·	·		·	·		·		
V8550	FKM	80A ±5	green	-25	+200	230	< -20		·	·	·		·	·		·		
V3638	FKM	80A ±5	black	-20	+200	230	< -10		·	·	·		·	·		·		
V3681	FKM	80A ±5	green	-20	+200	230	< -10		·	·	·		·	·		·		
V3841	FKM	80A ±5	green	-20	+200	230	< -10		·	·	·		·	·		·		
V3664	FKM	85A ±5	green	-20	+200	230	< -8		·	·	·		·	·		·		
V9154	FKM	85A ±5	black	-20	+200	230	< -10		·	·	·		·	·		·		
V9169	FKM	80A ±5	black	-30	+200	230	< -29		·	·	·	·	·	·		·	·	
V9134	FKM	72A ±5	green	-10	+200	230	< -6		·	·	·	·	·	·		·		
V3839	FKM	90A ±5	green	-20	+200	230	< -8		·	·	·	·	·	·		·		
N3560	NBR	60A ±5	black	-40	+100	120	< -35		·	·	·	·	·	·		·	·	
N3567	NBR	70A ±5	black	-20	+100	120	< -16		·	·	·	·	·			·	·	
N0674	NBR	70A ±5	black	-30	+100	120	< -22		·	·	·	·	·	·		·	·	
N3571	NBR	70A ±5	black	-35	+100	120	< -25		·	·	·	·	·	·		·	·	
N8612	NBR	70A ±5	black	-35	+100	120	< -33		·	·	·	·	·	·				
N3854	NBR	70A ±5	black	-30	+100	120	< -19		·	·	·	·	·	·		·	·	

For specific requirements, special compounds are available. Please contact our consultancy service.

1) Hardness values are average values, measured on standard specimen of 6 mm thickness acc. to DIN 53505. On finished parts, only micro hardness (IRHD-M) can typically be measured, which leads to different results.

2) The minus temperatures are provided as a general guideline only because functionality at low temperatures depends on seal design, operating conditions and the condition of adjoining metal parts. The plus temperatures stated depend on the application. They may be exceeded but will reduce service life accordingly. Short-term operation without loads, e.g. during painting processes, above the temperature limit is permissible. Long-term operation above the temperature limit will reduce service life. The use of aggressive media intensifies the degradation process.

Tel: +45 63 12 83 00 | Email: ps@hymatik.com | www.hymatik.com | Hvidkaervej 27a, DK-5250 Odense SV, Denmark

Sealing compounds for fluid technology

Application																Standards	Remarks
HFD	Water	Compressed air	Acids	Lyes	Hydraulics	Pneumatics	Automotive	Industrial	Mining	oil and gas	Gas	Food, CPI	Drinking water		
		·	·	·	·			·	·								
		·	·	·	·			·	·					·			
		·	·	·	·			·	·				·	·			· high tear resistance · high tensile strength
		·	·	·	·			·	·								· Adblue® resistant
	·		·	·		·	·	·	·	·	·	·					
	·	·	·	·				·		·	·	·					
	·		·	·		·	·	·	·	·	·	·					
	·		·	·		·	·	·	·	·	·	·					
	·		·	·		·	·	·	·	·	·	·					
	·		·	·		·	·	·	·	·	·	·					
	·		·	·		·	·	·	·	·	·	·					· for bonded seals (rubber/metal, etc.)
	·		·	·		·	·	·	·	·	·	·					· improved chemical resistance
	·		·	·		·		·		·	·	·					· wear-resistant · for shock absorber applications
	·	·	·	·		·	·	·	·	·	·	·	·				· exhaust gas · acetic acid resistant · resistant to condensate · suitable for biodiesel (RME) applications · Fuels containing ethanol (E85)
	·		·	·		·	·	·	·	·	·	·					· for bonded seals (rubber/metal, etc.)
	·		·	·		·			·	·	·	·					· for bonded seals (rubber/metal, etc.)
		·	·		·	·	·			·	·	·					
		·	·		·	·	·	·	·	·	·	·					· suitable for sealing plastic parts
		·	·		·	·	·	·	·	·	·	·					
		·	·		·	·	·	·	·	·	·	·					
		·	·		·	·	·	·	·	·	·	·					
		·	·		·	·	·	·	·	·	·	·					

Tel: +45 63 12 83 00 | Email: ps@hymatik.com | www.hymatik.com | Hvidkaervej 27a, DK-5250 Odense SV, Denmark

Sealing compounds for fluid technology

Compound code	Polymer base	Shore hard-ness[1]	Colour	Temperature range[2] (°C)			T-Onset (°C)	TR 10 (°C)	Media compatibility									
				min.	max.	short			Mineral oil	Poly-α-Olefin	HEPR	HEPG	HETG	HEES	DOT-3 / -4	HFAE, HFAS, HFB	HFC	
Rubber resistant to mineral oil																		
N8602	NBR	70A ±5	black	-50	+80	100	< -45		·	·	·	·	·			·	·	
N8604	NBR	70A ±5	black	-30	+100	120	< -21		·	·	·	·	·	·		·	·	
N9150	NBR	70A ±5	black	-35	+120	135	< -25		·	·	·	·	·	·		·	·	
N3566	NBR	75A ±5	yellow-brown	-20	+100	120	< -5		·	·	·	·	·	·		·	·	
N3578	NBR	75A ±5	black	-30	+100	120	< -23		·	·	·	·	·			·	·	
N3771	NBR	80A ±5	black	-15	+100	120	< -25		·	·	·	·	·	·		·	·	
N3580	NBR	80A ±5	brown	-25	+80	100	< -18		·	·	·	·	·			·	·	
N9148	NBR	75A ±5	black	-30	+100	130	< -30		·	·	·	·	·			·	·	
N8613	NBR	80A ±5	black	-50	+80	100	< -45		·	·	·	·	·	·		·	·	
N3584	NBR	80A ±5	black	-25	+100	120	< -20		·	·	·	·	·			·	·	
N3582	NBR	85A ±5	brown	-10	+80	120	< -2		·	·	·	·	·	·		·	·	
N3589	NBR	85A ±5	black	-20	+100	120	< -15		·	·	·	·	·			·	·	
N3763	NBR	85A ±5	brown	-25	+100	120	< -20		·	·	·	·	·	·		·	·	
N3544	NBR	90A ±5	black	-25	+100	120	< -18		·	·	·	·	·	·		·	·	
N3587	NBR	90A ±5	black	-25	+100	120	< -10		·	·	·	·	·			·	·	
N3764	NBR	90A ±5	brown	-10	+100	120	< -4		·	·	·	·	·			·	·	
N1173	HNBR	75A ±5	black	-25	+150	170	< -20		·	·	·	·	·			·	·	
N8615	HNBR/NBM	70A ±5	black	-25	+130	150	< -22		·	·	·	·	·			·	·	
N3573	HNBR/NBM	75A ±5	black	-20	+150	170	< -16		·	·	·	·	·			·	·	
N9192	HNBR	80A ±5	grey	-35	+130	150	< -35		·	·	·	·	·			·	·	
KB163																		
KA183	HNBR	85A ±5	black	-30	+130	150	< -35		·	·	·	·	·			·	·	
N9182	HNBR	75A ±5	black	-30	+130	150	< -25		·	·	·	·	·			·	·	
N3510	HNBR/NBM	85A ±5	black	-20	+150	170	< -18		·	·	·	·	·			·	·	
N3512	HNBR/NBM	90A ±5	black	-20	+150	170	< -16		·	·	·	·	·			·	·	
N8526	HNBR/NBM	90A ±5	black	-20	+150	170	< -16		·	·	·	·	·			·	·	
N8557	HNBR	75A ±5	black	-35	+130	150	< -35		·	·	·	·	·			·	·	

For specific requirements, special compounds are available. Please contact our consultancy service.

1) Hardness values are average values, measured on standard specimen of 6 mm thickness acc. to DIN 53505. On finished parts, only micro hardness (IRHD-M) can typically be measured, which leads to different results.

2) The minus temperatures are provided as a general guideline only because functionality at low temperatures depends on seal design, operating conditions and the condition of adjoining metal parts. The plus temperatures stated depend on the application. They may be exceeded but will reduce service life accordingly. Short-term operation without loads, e.g. during painting processes, above the temperature limit is permissible. Long-term operation above the temperature limit will reduce service life. The use of aggressive media intensifies the degradation process.

Tel: +45 63 12 83 00 | Email: ps@hymatik.com | www.hymatik.com | Hvidkaervej 27a, DK-5250 Odense SV, Denmark

Sealing compounds for fluid technology

Application															Standards	Remarks
HFD	Water	Compressed air	Acids	Lyes	Hydraulics	Pneumatics	Automotive	Industrial	Mining	oil and gas	Gas	Food, CPI	Drinking water			
	·	·		·	·	·	·	·	·	·	·			• limited ozone resistance acc. to ISO 1431-1, procedure B	• good low-temperature resistance
	·	·		·	·	·	·	·	·	·	·			• limited ozone resistance acc. to DIN 53509/1 • DVGW	
	·	·		·	·	·	·	·	·	·	·				
	·	·		·	·	·	·	·	·	·	·				
	·	·		·	·	·	·	·	·	·	·				
	·	·		·	·	·	·	·	·	·	·				• heating oils
	·	·		·	·	·	·	·	·	·	·				
		·		·	·	·	·	·	·	·	·				
	·	·		·	·	·	·	·	·	·	·			• limited ozone resistance acc. to ISO 1431-1, procedure B	• good low-temperature resistance • air brakes
	·	·		·	·	·	·	·	·	·	·				
	·	·		·	·	·	·	·	·	·	·				
	·	·		·	·	·	·	·	·	·	·				• suitable for sealing non-ferrous metal and plastic parts
	·	·		·	·	·	·	·	·	·	·				
	·	·		·	·	·	·	·	·	·	·				
	·	·		·	·	·	·	·	·	·	·				• only for wipers
	·	·		·	·	·	·	·	·	·	·				
	·	·		·	·	·	·	·	·	·	·				• suitable for R134a, HFO 1234yf
	·	·		·	·	·	·	·	·	·	·				
	·	·		·	·	·	·	·	·	·	·				
	·	·		·	·	·	·	·	·	·	·				• Adblue® resistant
	·	·		·	·	·	·	·	·	·	·				• good low-temperature resistance • NORSOK M-710 compliant
	·	·		·	·	·	·	·	·	·	·				• Adblue® resistant
	·	·		·	·	·	·	·	·	·	·				
	·	·		·	·	·	·	·	·	·	·				
	·	·		·	·	·	·	·	·	·	·				• outstanding wear resistance
	·	·		·	·	·	·	·	·	·	·				• central hydraulics media

Tel: +45 63 12 83 00 | Email: ps@hymatik.com | www.hymatik.com | Hvidkaervej 27a, DK-5250 Odense SV, Denmark

Sealing compounds for fluid technology

Compound code	Polymer base	Shore hard-ness[1]	Colour	Temperature range[2] (°C)			T-Onset (°C)	TR 10 (°C)	Media compatibility									
				min.	max.	short			Mineral oil	Poly-α-Olefin	HEPR	HEPG	HETG	HEES	DOT-3 / -4	HFAE, HFAS, HFB	HFC	
Diaphragm compounds																		
N3770	NBR	55A ±5	black	-25	+100	120	< -20		·	·	·	·	·			·	·	
Rubber/fabric compounds																		
Q5006	FKM		green	-20	+150				·	·	·	·	·	·		·		
Q5009	NBR		dark grey	-40	+120				·	·	·	·	·			·	·	
Q5018	NBR		black	-40	+120				·	·	·	·	·			·	·	
Q5019	NBR		black	-40	+120				·	·	·	·	·			·	·	
Q5021	NBR		black	-40	+120				·	·	·	·	·			·	·	
Q5022	NBR		black	-40	+120				·	·	·	·	·			·	·	
Q5023	NBR		brown	-40	+120				·	·	·	·	·			·	·	
Q5024	NBR		brown	-40	+120				·	·	·	·	·			·	·	
Q5052	NBR		black	-40	+120				·	·	·	·	·			·	·	
Polyurethane compounds (Ultrathan®)																		
P4300	TPU	92A ±5	yellow	-50	+110	145			·	·	·							
P5000	TPU	94A ±5	dark green	-20	+100	120			·	·	·		·	·		·		
P5001	TPU	94A ±5	brown	-35	+100	120			·	·	·		·	·		·		
P5004	TPU	93A ±5	black	-30	+80	100			·	·	·							
P5007	TPU	82A ±5	green, trans-parent	-35	+80	110			·	·	·							
P5008	TPU	94A ±5	green	-35	+100	120			·	·	·							
P5009	TPU	94A ±5	grey	-45	+95	115			·	·	·							
P5010	TPU	90A ±5	dark red	-30	+100	120			·	·	·							
P5011	TPU	88A ±5	brown	-36	+85	110			·	·	·		·	·		·		
P5012	TPU	90A ±5	red	-38	+100	120			·	·	·		·	·		·		
P5062	TPU	52D ±5	black	-25	+110	130			·	·	·							
P5070	TPU	83A ±5	green	-35	+85	110			·	·	·		·	·		·		
P5075	TPU	80A ±5	ochre	-50	+80	100			·	·	·							

For specific requirements, special compounds are available. Please contact our consultancy service.

1) Hardness values are average values, measured on standard specimen of 6 mm thickness acc. to DIN 53505. On finished parts, only micro hardness (IRHD-M) can typically be measured, which leads to different results.

2) The minus temperatures are provided as a general guideline only because functionality at low temperatures depends on seal design, operating conditions and the condition of adjoining metal parts. The plus temperatures stated depend on the application. They may be exceeded but will reduce service life accordingly. Short-term operation without loads, e.g. during painting processes, above the temperature limit is permissible. Long-term operation above the temperature limit will reduce service life. The use of aggressive media intensifies the degradation process.

Tel: +45 63 12 83 00 | Email: ps@hymatik.com | www.hymatik.com | Hvidkaervej 27a, DK-5250 Odense SV, Denmark

Sealing compounds for fluid technology

Application															Standards	Remarks
HFD	Water	Compressed air	Acids	Lyes	Hydraulics	Pneumatics	Automotive	Industrial	Mining	oil and gas	Gas	Food, CPI	Drinking water			
	·	·		·	·	·	·	·	·	·	·					· low gas permeability
		·			·			·	·							
	·				·			·	·	·						· high-pressure cleaners
	·				·			·	·	·						· high-pressure cleaners
					·				·	·						
					·				·	·						
					·				·	·						
	·				·			·	·	·						· high-pressure cleaners
	·				·			·	·	·						· high-pressure cleaners
	·				·			·	·	·						· high-pressure cleaners
		·			·			·								· excellent high-temperature behaviour · excellent dynamic behaviour
	·	·			·	·	·	·	·			·			· FDA	· good hydrolysis resistance
	·	·			·	·	·	·	·						· exceeds VDMA Guideline 24568 for high-performance hydraulic oils of water hazard class 0	· good hydrolysis resistance
		·			·							·				
		·				·										
		·			·	·		·	·	·	·					
		·			·				·	·						· excellent low-temperature behaviour
		·			·	·										
	·	·				·	·	·								· friction-optimized · very good wear resistance
	·	·			·	·	·	·								· central hydraulics media
		·			·			·	·	·	·					· very good extrusion resistance · low friction · good hydrolysis resistance
	·	·				·										
		·				·	·	·								· outstanding low-temperature behaviour · outstanding dynamic behaviour

Sealing compounds for fluid technology

Compound code	Polymer base	Shore hard-ness[1]	Colour	Temperature range[2] (°C)			T-Onset (°C)	TR 10 (°C)	Media compatibility									
				min.	max.	short			Mineral oil	Poly-α-Olefin	HEPR	HEPG	HETG	HEES	DOT-3 / -4	HFAE, HFAS, HFB	HFC	
P5080	TPU	88A ±5	light green	-40	+85	110			·	·	·		·	·		·		
P6000	TPU	95A ±5	charcoal-grey	-35	+110	120			·	·	·							
P6030	TPU	94A ±5	orange	-35	+105	120			·	·	·							
Plastic materials																		
W5005	TPE-E	40D ±5	nature	-40	+100	120			·	·	·							
W5035	TPE-E	55D ±5	grey	-40	+100	120			·	·	·							
W5001	POM		nature	-40	+100	120			·	·	·	·	·	·		·	·	
W5007	PA 6.6		nature	-40	+110	130			·	·	·	·	·	·	·	·	·	
W5019	PA 6.6 + 30 % glas fibre		black	-40	+120	140			·	·	·	·	·	·	·	·	·	
W5059	PA 6.6 + 35 % glas fibre		black	-40	+140	160			·	·	·	·	·	·	·	·	·	
W5098	PA 12	72D	black	-50	+100	150			·	·	·	·	·	·	·	·	·	
W5097	PPA + 60 % glas fibre		dark grey	-40	+200	220			·	·						·		
W5306	PPS + 55 % glas fibre		nature	-40	+200	220			·	·	·	·	·	·	·	·	·	
W5029	PEI + 10 % glas fibre		nature	-50	+170	190			·	·								
W5052	PEEK		nature	-40	+200	250			·	·	·	·	·	·	·	·	·	
W5082	PEEK + 30 % glas fibre		nature	-40	+250	300			·	·	·	·	·	·	·	·	·	
W5314	PEEK + 30 % carbon fibre		black	-40	+250	300			·	·	·	·	·	·	·	·	·	
nobrox® W6101	PK		nature	-40	+120	135			·	·	·	·	·	·		·	·	
nobrox® W6100	PK		orange brown	-40	+120	135			·	·	·	·	·	·		·	·	

For specific requirements, special compounds are available. Please contact our consultancy service.

1) Hardness values are average values, measured on standard specimen of 6 mm thickness acc. to DIN 53505. On finished parts, only micro hardness (IRHD-M) can typically be measured, which leads to different results.

2) The minus temperatures are provided as a general guideline only because functionality at low temperatures depends on seal design, operating conditions and the condition of adjoining metal parts. The plus temperatures stated depend on the application. They may be exceeded but will reduce service life accordingly. Short-term operation without loads, e.g. during painting processes, above the temperature limit is permissible. Long-term operation above the temperature limit will reduce service life. The use of aggressive media intensifies the degradation process.

Tel: +45 63 12 83 00 | Email: ps@hymatik.com | www.hymatik.com | Hvidkaervej 27a, DK-5250 Odense SV, Denmark

Sealing compounds for fluid technology

Application															Standards	Remarks
HFD	Water	Compressed air	Acids	Lyes	Hydraulics	Pneumatics	Automotive	Industrial	Mining	oil and gas	Gas	Food, CPI	Drinking water			
	·	·			·		·									• stick-slip free sliding • central hydraulics media
		·			·				·	·						• excellent wear resistance
		·			·			·	·	·	·					• high wear resistance
		·			·	·										
		·			·	·										
	·	·	·		·	·				·	·	·				
	·	·	·	·	·	·	·	·	·							
	·	·	·	·	·	·	·	·	·	·						
	·	·	·	·	·	·	·	·	·	·						
	·	·	·	·	·	·	·	·	·	·						
	·	·	·			·	·	·	·							
	·	·	·			·	·	·	·							• glass-fibre reinforced
	·	·	·			·	·	·	·							• rotary transmissions
	·	·	·			·	·	·	·							
	·	·	·			·	·	·	·							
	·	·	·			·	·	·	·				·	·	• FDA	• limited resistance to acids and lyees
	·	·	·			·	·	·	·							• limited resistance to acids and lyees

Tel: +45 63 12 83 00 | Email: ps@hymatik.com | www.hymatik.com | Hvidkaervej 27a, DK-5250 Odense SV, Denmark

Sealing compounds for fluid technology

Compound code	Polymer base	Shore hardness[1]	Colour	Temperature range[2] (°C)			T-Onset (°C)	TR 10 (°C)	Media compatibility									
				min.	max.	short			Mineral oil	Poly-α-Olefin	HEPR	HEPG	HETG	HEES	DOT-3 / -4	HFAE, HFAS, HFB	HFC	
Polon® compounds																		
044	PTFE + 15 % graphite		black	-190	+230				·	·	·	·	·	·	·	·	·	
052	PTFE + 40 % bronze		bronze	-156	+260				·	·	·	·	·	·	·	·	·	
062	PTFE + 60 % bronze		bronze	-156	+260				·	·	·	·	·	·	·	·	·	
067	PTFE + 10 % ekonol		beige	-260	+320				·	·	·	·	·	·	·	·	·	
074	PTFE + 10 % carbon fibre		greyish	-260	+310				·	·	·	·	·	·	·	·	·	
083	TPU	72D ±5	yellow, transparent	-20	+100				·	·	·	·	·	·	·	·	·	
006	UHMW-PE		white	-200	+80				·	·							·	
331	PVDF		white/yellow	-30	+140				·	·	·	·	·	·		·	·	

For specific requirements, special compounds are available. Please contact our consultancy service.

1) Hardness values are average values, measured on standard specimen of 6 mm thickness acc. to DIN 53505. On finished parts, only micro hardness (IRHD-M) can typically be measured, which leads to different results.

2) The minus temperatures are provided as a general guideline only because functionality at low temperatures depends on seal design, operating conditions and the condition of adjoining metal parts. The plus temperatures stated depend on the application. They may be exceeded but will reduce service life accordingly. Short-term operation without loads, e.g. during painting processes, above the temperature limit is permissible. Long-term operation above the temperature limit will reduce service life. The use of aggressive media intensifies the degradation process.

Tel: +45 63 12 83 00 | Email: ps@hymatik.com | www.hymatik.com | Hvidkaervej 27a, DK-5250 Odense SV, Denmark

Sealing compounds for fluid technology

Application																Standards	Remarks
HFD	Water	Compressed air	Acids	Lyes	Hydraulics	Pneumatics	Automotive	Industrial	Mining	oil and gas	Gas	Food, CPI	Drinking water		
	·	·	·	·	·			·	·		·						• for low mechanical loads • for soft sealing surfaces • chemical resistance limited by graphite
	·	·	·	·	·	·		·	·	·	·						• outstanding wear resistance • outstanding creep resistance • for high mechanical loads
	·		·	·	·	·		·	·	·	·						• outstanding wear resistance • outstanding creep resistance • for high mechanical loads
	·		·	·	·	·		·	·		·						• for medium mechanical loads • for soft sealing surfaces • limited chemical resistance • limited usability in hot water
	·	·	·	·	·	·	·	·	·								• for short strokes with high frequency • very good wear resistance in water • suitable for sea water
	·	·	·	·	·	·	·	·	·				·				• very good wear resistance • for high mechanical loads
		·				·	·	·		·				·	·		• outstanding wear resistance in water and air
		·	·	·	·	·			·	·	·						• wear resistance like nylon • suitable for steam sterilisation

Tel: +45 63 12 83 00 | Email: ps@hymatik.com | www.hymatik.com | Hvidkaervej 27a, DK-5250 Odense SV, Denmark

General installation guidelines for piston seals

International (ISO) and national (DIN) standards for seal housing dimensions are in place and should be considered. For seals requiring a special groove, e.g. special seals, valve seals, rotor seals etc., the groove dimensions are stated separately. In general, the surface finishes, leading edge chamfers and dimensions stated here have already proved themselves and will mostly be found in the standards.

We recommend that customers adhere to the tolerances and surface finishes stated in this catalogue. This is a prerequisite for easy, damage-free installation and for the seal to retain the properties stated in this catalogue.

Surfaces: Grinding as final machining process for dynamic sealing surfaces is not sufficient. These surfaces have to be polished afterwards.

Radii: As for the necessary radii (r) please refer to the respective profile data or the applicable standards.

Solid piston

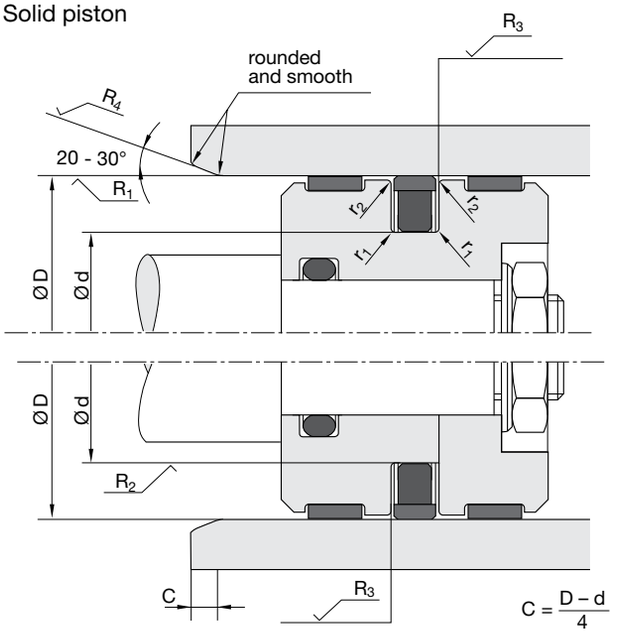

Split piston

Surfaces

Dynamic sealing surfaces
For rubber and PTFE products
R_1: R_z 1.0 µm / R_a 0.2 µm
80 % ≤ $*t_{p1}$ ≤ 95 %

For polyurethane products
R_1: R_z 1.6 µm / R_a 0.4 µm
60 % ≤ $*t_{p1}$ ≤ 80 %

Static sealing surfaces
R_2: R_z 6.3 µm / R_a 0.8 µm
$*t_{p2}$ ≥ 60 %

Non-sealing surfaces and lead-in chamfers
R_3: R_z 16 µm / R_a 4 µm
R_4: R_z 10 µm / R_a 1.6 µm

* Measured in a depth of 25 % of the R_z-value based on a reference level (zero line) set at 5 % bearing area.

Stretchable seals with tight fit

When seals have a tight fit the piston shoulder diameter can be reduced to ease assembly. By adapting this principal, metal to metal contact, caused by the piston contacting the cylinder wall surface under high transverse loads, is avoided.

Radii: As for the necessary radii please refer to the respective profile data or the applicable standards.

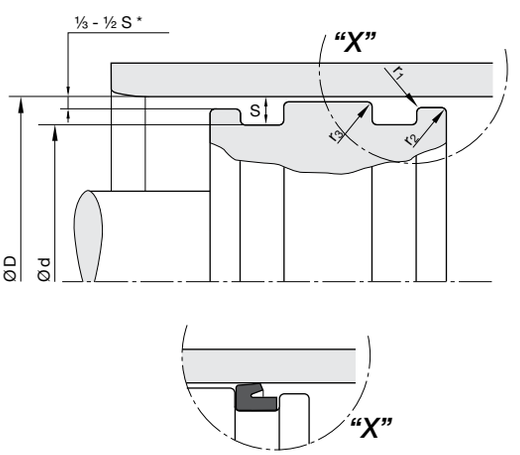

Tel: +45 63 12 83 00 | Email: ps@hymatik.com | www.hymatik.com | Hvidkaervej 27a, DK-5250 Odense SV, Denmark

General installation guidelines for piston seals

PTFE seals

Installation guidelines for PTFE seals
The grooves must be carefully cleaned and deburred. The cylinder bore must have a lead-in chamfer. When fitting the piston sealing ring there is always the danger that the ring may tilt and be sheared off by normal lead-in chamfers (see fig.). We therefore recommend that up to a cylinder diameter of 230 mm a lead-in chamfer according to detail "A" is considered. In the case of smaller rings which are especially liable to bending we recommend an open-groove design for diameters smaller than 30 mm.

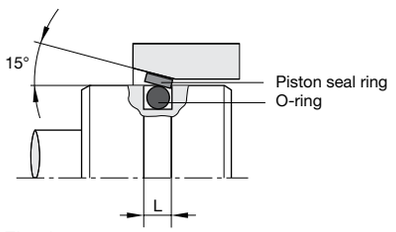

Fig. 1

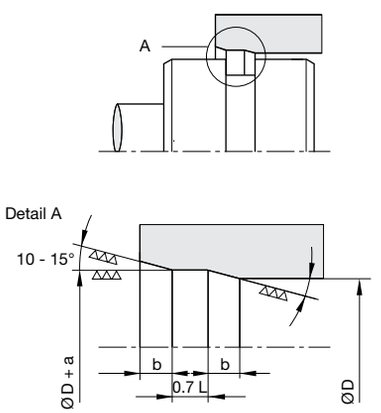

Fig. 2

Ø D	min. a	max. b
≤ 45	0.8	2.4
45 - 175	1	3
175 - 230	1.5	4.5

Assembly instruction for PTFE seals
Install the O-ring in the groove as per normal practice. Piston sealing rings of up to 100 mm diameter and wall thickness of over 1.6 mm should be „slowly" expanded and fitted with an assembly tool (see fig. 3). Larger rings can be expanded by hand. Uneven stretching or overstretching must be avoided under all circumstances.
Should it be necessary to pull the rings over existing guide ring grooves, then these grooves must be covered with plastic tape, or alternatively the expanding mandrel must reach the groove in question (see fig. 3). This ensures that the piston sealing ring does not snap into the wrong groove. The use of a burnishing shell is recommended when the assembly of a piston is made difficult by an overstretched ring or when the cylinder has an inadequate lead-in chamfer (see fig. 4).
Assembly aids can be manufactured conveniently out of metal. However, in many cases polyamide or POM is also suitable.

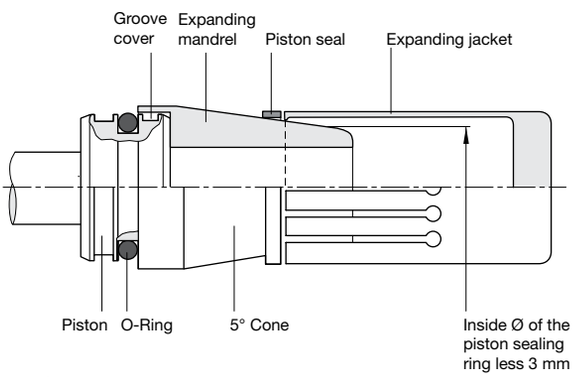

Fig. 3

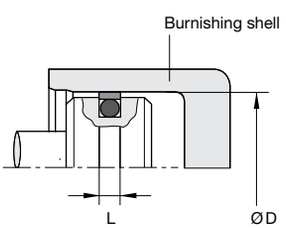

Fig. 4

Tel: +45 63 12 83 00 | Email: ps@hymatik.com | www.hymatik.com | Hvidkaervej 27a, DK-5250 Odense SV, Denmark

General installation guidelines for rod seals

International (ISO) and national (DIN) standards for seal housing dimensions are in place and should be considered. For seals requiring a special groove, e.g. special seals, valve seals, rotor seals etc., the groove dimensions are stated separately. In general, the surface finishes, leading edge chamfers and dimensions stated here have already proved themselves and will mostly be found in the standards.

We recommend that customers adhere to the tolerances and surface finishes stated in this catalogue. This is a prerequisite for easy, damage-free installation and for the seal to retain the properties stated in this catalogue.

Surfaces: Grinding as final machining process for dynamic sealing surfaces is not sufficient. These surfaces have to be polished afterwards.

Radii: As for the necessary radii (r) please refer to the respective profile data or the applicable standards.

Closed groove

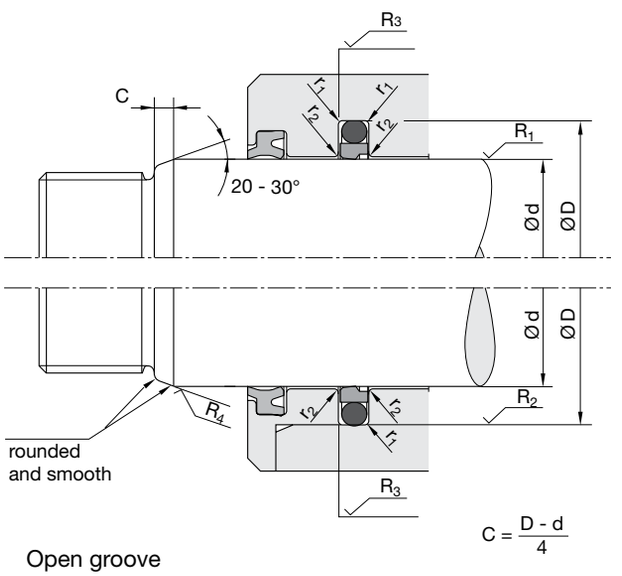

Open groove

Surfaces

Dynamic sealing surfaces
For rubber and PTFE products
R_1: R_z 1.0 µm / R_a 0.2 µm
80 % ≤ $*t_{p1}$ ≤ 95 %

For polyurethane products
R_1: R_z 1.6 µm / R_a 0.4 µm
60 % ≤ $*t_{p1}$ ≤ 80 %

Static sealing surfaces
R_2: R_z 6.3 µm / R_a 0.8 µm
$*t_{p2}$ ≥ 60 %

Non-sealing surfaces and lead-in chamfers
R_3: R_z 16 µm / R_a 4 µm
R_4: R_z 10 µm / R_a 1.6 µm

* Measured in a depth of 25 % of the R_z-value based on a reference level (zero line) set at 5 % bearing area.

Tel: +45 63 12 83 00 | Email: ps@hymatik.com | www.hymatik.com | Hvidkaervej 27a, DK-5250 Odense SV, Denmark

General installation guidelines for rod seals

PTFE seals

Installation guidelines for PTFE seals
The grooves must be carefully cleaned and deburred. The rods must have a lead-in chamfer (see picture on previous page). We recommend open-groove designs for rod diameters smaller than 30 mm as these rings are prone to breaking if deformed as described above.

Assembly instruction for PTFE seals
First the O-ring must be installed in the groove. Then the rod seal should be carefully formed into a kidney shape without sharp bends as shown in fig. 2. This deformed ring is placed in the groove and rounded with the aid of a pin.

Fig. 1: Another type of installation aid. It consists of a metal pin which has a female cone-shaped recess at one of its front-ends. The PTFE ring can be easily placed in the recess by manually deforming it (see fig. 2). Due to the reduced diameter the PTFE ring (still placed on the pin) can now be installed into the groove. After removal of the pin the PTFE ring can be pressed into the groove and re-formed.

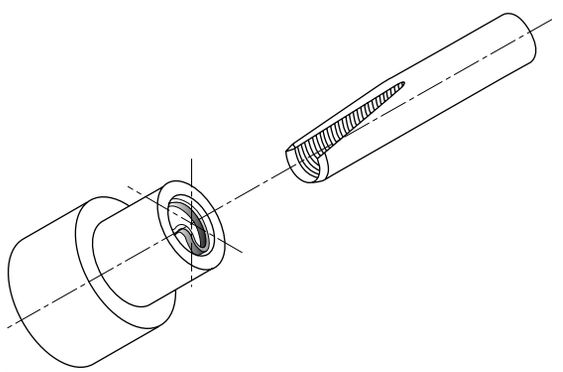

Fig. 1

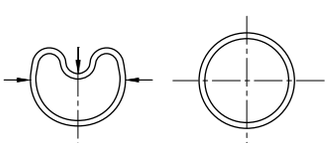

Fig. 2

Tel: +45 63 12 83 00 | Email: ps@hymatik.com | www.hymatik.com | Hvidkaervej 27a, DK-5250 Odense SV, Denmark

Maximum gap allowance

Definition

The maximum gap “e”, stated with the respective profile, stands for the maximum gap occuring between rod and guidance resp. between piston and cylinder exhausting all tolerances and maximum excentricity.

Conditions

1. Surface quality according to our recommendations (see „General Installation Guidelines“)
2. Lubricating fluids

For special conditions, e.g. nonlub fluids, water, acids, alcalies, please contact our consultancy service.

The nomographs in our catalogues have been developed for the „worst case“, that means pushing conditions (for the rod e.g. plunger conditions) and softest material in the corresponding group (e.g. 85 Shore A for polyurethanes and 70 Shore A for NBR).

If the application is not in a pushing mode, the extrusion gap can be increased by 25 %.

If instead of a 85 Shore A polyurethane a 93 Shore material or instead of a 70 Shore NBR a 85 Shore material is used, the extrusion gap can be increased by another 15 % (intermediate values to be balanced).

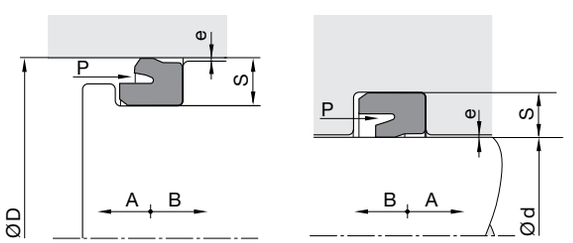

A = pushing
B = pulling

Example 1: Polyurethane seals of Shore A ≥ 85 and cotton-reinforced seals

(see following pages)

d/D = Dynamic seal diameter = 90 mm*
S = Cross-section = 7.5 mm
P = Pressure = 315 bar
T = Temperature = 80 °C

* Insert the dynamic diameter and not the static one (groove diameter or tight fit). Means cylinder diameter for the piston seal (D) and rod diameter for the rod seal (d).

Method:

1. Draw a line connecting d/D to S and extend it until intersection with the line ξ1.
2. Draw a line connecting P to T and extend it until intersection with the line ξ2.
3. Connect the two intersections and read the allowable gap (0.16 mm) on scale “e”.

Example 2: NBR, HNBR and FKM seals between 70 and 85 Shore A

(see following pages)

d/D = Dynamic seal diameter = 100 mm*
S = Cross-section = 6 mm
P = Pressure = 100 bar
T = Temperature = 80 °C

* Insert the dynamic diameter and not the static one (groove diameter or tight fit). Means cylinder diameter for the piston seal (D) and rod diameter for the rod seal (d).

Method:

1. Draw a line connecting d/D to S and extend it until intersection with the line ξ1.
2. Draw a line connecting P to T and extend it until intersection with the line ξ2.
3. Connect the two intersections and read the allowable gap (0.18 mm) on scale “e”.

Tel: +45 63 12 83 00 | Email: ps@hymatik.com | www.hymatik.com | Hvidkaervej 27a, DK-5250 Odense SV, Denmark

Maximum gap allowance

Polyurethane seals of Shore A ≥ 85 and cotton-reinforced seals

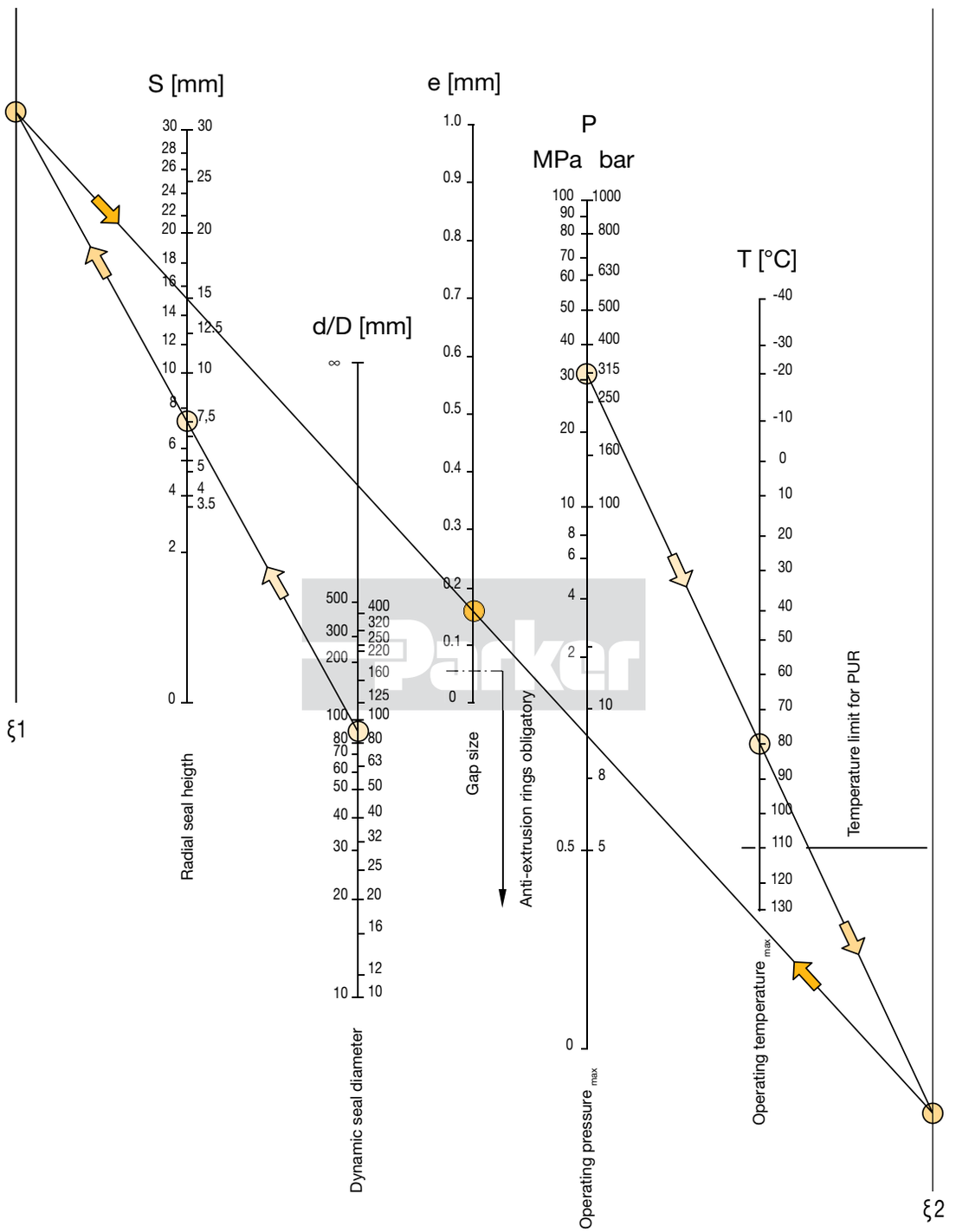

Tel: +45 63 12 83 00 | Email: ps@hymatik.com | www.hymatik.com | Hvidkaervej 27a, DK-5250 Odense SV, Denmark

Maximum gap allowance

NBR, HNBR and FKM seals between 70 and 85 Shore

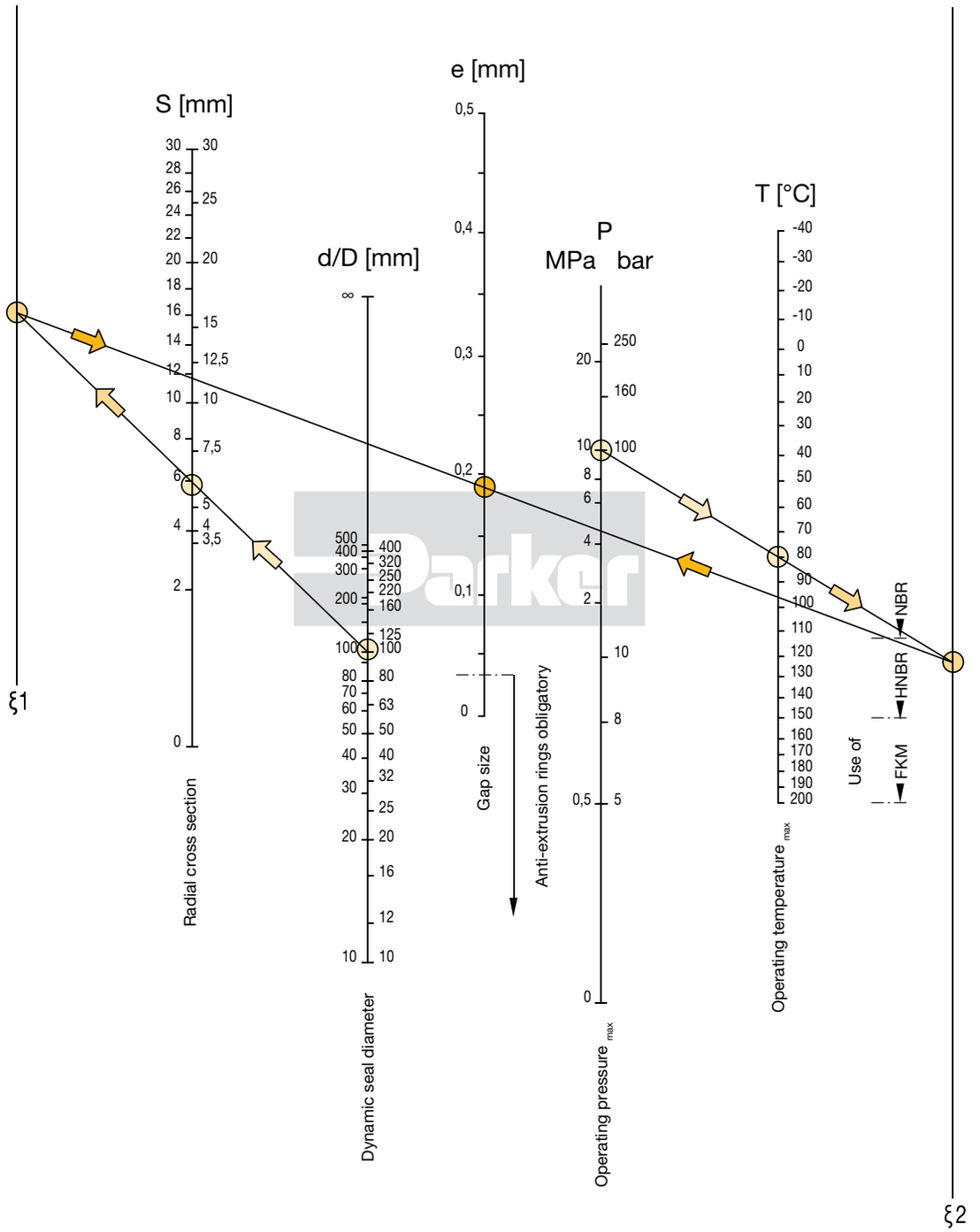

Wipers

Profile cross-section	Profile reference	Page
Wipers		
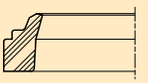	A1 (NBR)	26
	A1 (TPU)	29
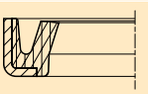	AF	32
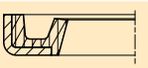	AG	34
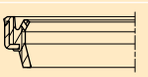	AH	36
	AM	38
Double wipers		
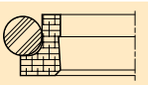	AD	36
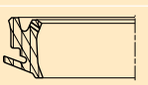	AV	46
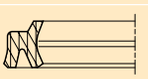	AY	48

Tel: +45 63 12 83 00 | Email: ps@hymatik.com | www.hymatik.com | Hvidkaervej 27a, DK-5250 Odense SV, Denmark

Wiper ring

A1 (NBR)



The A1 wiper ring serves to prevent ingress of dust, dirt, sand and swarf. This is achieved by its special design which largely prevents scoring, protects the guiding parts and extends the service life of the seals. An oversized outer diameter ensures interference fit in the groove, thus preventing ingress of foreign particles and moisture via the static seal fit of the wiper. The A1 wiper is available in both Ultrathan® and rubber compounds. The Ultrathan® versions are characterized by extremely high wear resistance.

- Good wear resistance.
- High temperature resistance in case of suitable compound selection.
- Excellent media resistance in case of suitable compound selection.
- Suitable compounds available for special requirements of the chemical process industry.
- Suitable compounds available for special requirements of the food processing industry.
- Dimensions according to DIN ISO 6195, Type E.
- Product geometry prevents dirt deposits at the front face of the cylinder.
- Installation in closed and undercut housings.

Range of Application

Axially operated rods in hydraulic and pneumatic working cylinders, plungers and rod guidances.

Operating temperature	-35 °C to +100 °C
Sliding speed	≤ 2 m/s

Compounds

Standard: N3587, NBR compound (ca. 90 Shore A).
For high temperatures: V3664, FKM compound (ca. 85 Shore A).
The standard material is a NBR-based elastomer compound with a hardness of approx. 90 Shore A.
The profile A1 (NBR) wiper ring is resistant to greases, lubricants, hydraulic oils, HFA-, HFB-, HFC-media, petrol, petroleum, water and lyes.

Installation

The profile A1 wiper ring is supplied as a continuous ring. Any pressure on the back of the ring should be avoided. Intermediate sizes may easily be cut from the next largest ring with the same cross-section. The ring is to be cut at an angle of 90° to the new circumference length (+ 2 to 3 % in excess). Due to the excess length the two ends will fit closely together so that no gap will occur. Gluing is not necessary. The wiper can easily be pressed into the groove and will fit perfectly tight.

In case of special operating conditions (specific pressure loads, temperature, speed, use in water, HFA, HFB fluids etc.), please contact our consultancy service for a selection of the material and design best suiting your particular application requirements.

Tel: +45 63 12 83 00 | Email: ps@hymatik.com | www.hymatik.com | Hvidkaervej 27a, DK-5250 Odense SV, Denmark

Wiper ring

A1 (NBR)

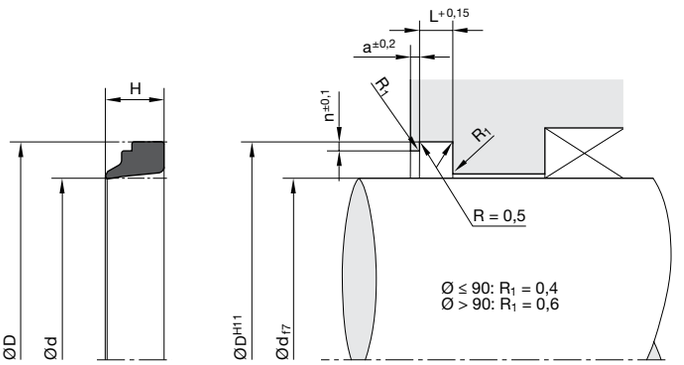

For surface finish, lead in chamfer and other installation dimensions see „General installation guidelines“.

d	D	H	L	a	n	Order code
4	12	7	4	1	1	A1 0015 N3587
5	8	4	2.2	1	0.5	A1 0025 N3587
6	10	4	2.2	1	0.5	A1 0035 N3587
8	14	5	2.6	1	1	A1 0042 N3587
8	16	7	4	1	1	A1 0045 N3587
10	16	5	2.6	1	1	A1 1002 N3587
10	18	7	4	1	1	A1 1005 N3587
12	18	5	2.6	1	1	A1 1009 N3587
12	20	7	4	1	1	A1 1010 N3587
14	20	5	3.1	1	1	A1 1014 N3587
14	22	7	4	1	1	A1 1015 N3587
15	23	7	4	1	1	A1 1020 N3587
16	22	5	3.1	1	1	A1 1016 N3587
16	24	7	4	1	1	A1 1025 N3587
17	25	7	4	1	1	A1 1030 N3587
18	24	5	3.1	1	1	A1 1034 N3587
18	26	7	4	1	1	A1 1035 N3587
20	26	5	3.1	1	1	A1 2026 N3587
20	28	7	4	1	1	A1 2005 N3587
22	30	7	4	1	1	A1 2010 N3587
23	31	7	4	1	1	A1 2015 N3587
24	32	7	4	1	1	A1 2020 N3587
25	33	7	4	1	1	A1 2025 N3587
26	34	7	4	1	1	A1 2030 N3587
28	36	7	4	1	1	A1 2035 N3587
30	36	7	4	1	1	A1 3003 N3587
30	38	7	4	1	1	A1 3005 N3587
32	40	7	4	1	1	A1 3010 N3587
34	42	7	4	1	1	A1 3020 N3587
35	43	7	4	1	1	A1 3025 N3587
36	44	7	4	1	1	A1 3030 N3587
38	46	7	4	1	1	A1 3035 N3587
40	48	7	4	1	1	A1 4005 N3587
42	50	7	4	1	1	A1 4015 N3587

d	D	H	L	a	n	Order code
44	52	7	4	1	1	A1 4025 N3587
45	53	7	4	1	1	A1 4030 N3587
46	54	7	4	1	1	A1 4040 N3587
47	55	7	4	1	1	A1 4045 N3587
48	56	7	4	1	1	A1 4050 N3587
50	58	7	4	1	1	A1 5005 N3587
52	60	7	4	1	1	A1 5020 N3587
54	62	7	4	1	1	A1 5030 N3587
55	63	7	4	1	1	A1 5035 N3587
56	64	7	4	1	1	A1 5040 N3587
57	65	7	4	1	1	A1 5042 N3587
58	66	7	4	1	1	A1 5045 N3587
60	68	7	4	1	1	A1 6005 N3587
63	71	7	4	1	1	A1 6020 N3587
65	73	7	4	1	1	A1 6030 N3587
66	74	7	4	1	1	A1 6035 N3587
68	76	7	4	1	1	A1 6045 N3587
70	78	7	4	1	1	A1 7005 N3587
72	80	7	4	1	1	A1 7015 N3587
75	83	7	4	1	1	A1 7025 N3587
78	86	7	4	1	1	A1 7040 N3587
80	88	7	4	1	1	A1 8002 N3587
82	90	7	4	1	1	A1 8010 N3587
85	93	7	4	1	1	A1 8025 N3587
86	94	7	4	1	1	A1 8030 N3587
90	98	7	4	1	1	A1 9005 N3587
92	100	7	4	1	1	A1 9015 N3587
95	103	7	4	1	1	A1 9030 N3587
97	105	7	4	1	1	A1 9045 N3587
100	108	7	4	1	1	A1 A010 N3587
105	117	10	5.5	1.5	1.5	A1 A035 N3587
106	118	10	5.5	1.5	1.5	A1 A040 N3587
110	118	7	4	1	1	A1 B005 N3587
110	122	10	5.5	1.5	1.5	A1 B010 N3587

Further sizes on request.

Tel: +45 63 12 83 00 | Email: ps@hymatik.com | www.hymatik.com | Hvidkaervej 27a, DK-5250 Odense SV, Denmark

Wiper ring

A1 (NBR)

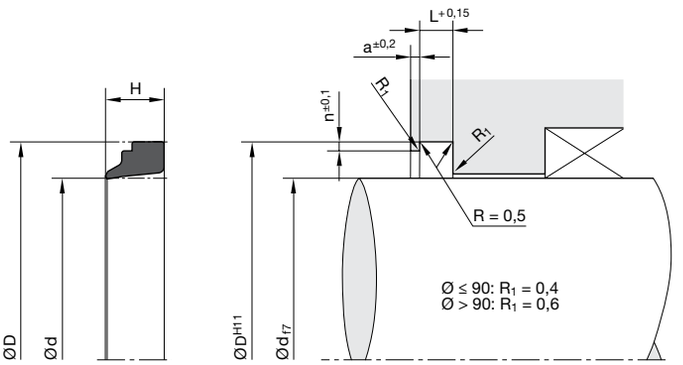

For surface finish, lead in chamfer and other installation dimensions see „General installation guidelines“.

d	D	H	L	a	n	Order code
114	122	7	4	1	1	A1 B028 N3587
115	127	10	5.5	1.5	1.5	A1 B035 N3587
120	132	10	5.5	1.5	1.5	A1 C010 N3587
125	137	10	5.5	1.5	1.5	A1 C020 N3587
130	142	10	5.5	1.5	1.5	A1 D010 N3587
135	147	10	5.5	1.5	1.5	A1 D025 N3587
140	152	10	5.5	1.5	1.5	A1 E010 N3587
145	157	10	5.5	1.5	1.5	A1 E035 N3587
150	162	10	5.5	1.5	1.5	A1 F005 N3587
152	164	10	5.5	1.5	1.5	A1 F015 N3587
155	167	10	5.5	1.5	1.5	A1 F030 N3587
160	172	10	5.5	1.5	1.5	A1 G010 N3587
165	177	10	5.5	1.5	1.5	A1 G025 N3587
166	178	10	5.5	1.5	1.5	A1 G030 N3587
170	182	10	5.5	1.5	1.5	A1 H010 N3587
175	187	10	5.5	1.5	1.5	A1 H025 N3587
180	192	10	5.5	1.5	1.5	A1 J010 N3587
185	197	10	5.5	1.5	1.5	A1 J050 N3587
190	202	10	5.5	1.5	1.5	A1 K015 N3587
195	207	10	5.5	1.5	1.5	A1 K030 N3587
200	212	10	5.5	1.5	1.5	A1 L003 N3587
210	218	7	4	1	1	A1 L009 N3587
210	225	13	6.5	2	2	A1 L010 N3587
220	235	13	6.5	2	2	A1 M010 N3587
230	245	13	6.5	2	2	A1 M016 N3587
235	250	13	6.5	2	2	A1 M020 N3587
240	255	13	6.5	2	2	A1 N015 N3587
250	265	13	6.5	2	2	A1 N040 N3587
260	275	13	6.5	2	2	A1 O005 N3587
265	280	13	6.5	2	2	A1 O030 N3587
300	315	13	6.5	2	2	A1 Q010 N3587
305	320	13	6.5	2	2	A1 Q015 N3587
310	325	13	6.5	2	2	A1 Q020 N3587
315	330	13	6.5	2	2	A1 Q025 N3587
320	335	13	6.5	2	2	A1 Q030 N3587
340	355	13	6.5	2	2	A1 Q035 N3587
365	380	13	6.5	2	2	A1 Q050 N3587
400	415	13	6.5	2	2	A1 R020 N3587
450	465	13	6.5	2	2	A1 R015 N3587
500	515	13	6.5	2	2	A1 S015 N3587

Further sizes on request.

Tel: +45 63 12 83 00 | Email: ps@hymatik.com | www.hymatik.com | Hvidkaervej 27a, DK-5250 Odense SV, Denmark

Wiper ring

A1 (TPU)



The A1 wiper ring serves to prevent ingress of dust, dirt, sand and swarf. This is achieved by its special design which largely prevents scoring, protects the guiding parts and extends the service life of the seals. An oversized outer diameter ensures interference fit in the groove, thus preventing ingress of foreign particles and moisture via the static seal fit of the wiper. The A1 wiper is available in both Ultrathan® and rubber compounds. The Ultrathan® versions are characterized by extremely high wear resistance.

- Extreme wear resistance.
- Excellent media resistance in case of suitable compound selection.
- Suitable compounds available for special requirements of the chemical process industry.
- Suitable compounds available for special requirements of the food processing industry.
- Dimensions according to DIN ISO 6195, Type E.
- Product geometry prevents dirt deposits at the front face of the cylinder.
- Installation in closed and undercut housings.
- Additional sizes of machined products available on short notice.

Range of Application

Axially operated rods in hydraulic and pneumatic working cylinders, plungers and rod guidances.

Operating temperature	-35 °C to +110 °C
Sliding speed	≤ 2 m/s

Compounds

The Ultrathan® P5008 compound is a Parker material based on polyurethane with a hardness of approx. 93 Shore A. Its main advantages in comparison with other polyurethane materials currently available on the market are the increased heat and wear resistance.
For low temperatures, the material Ultrathan® P5009 is recommended.

Installation

The profile A1 Ultrathan® wiper ring can be snapped into simple housings. The wiper lip should not come into contact with piston rod eye or their connecting pieces. It is however recommended that the wiper lip be positioned outside the housing so that the wiped-off dirt can be easily removed.

In case of special operating conditions (specific pressure loads, temperature, speed, use in water, HFA, HFB fluids etc.), please contact our consultancy service for a selection of the material and design best suiting your particular application requirements.

Tel: +45 63 12 83 00 | Email: ps@hymatik.com | www.hymatik.com | Hvidkaervej 27a, DK-5250 Odense SV, Denmark

Wiper ring

A1 (TPU)

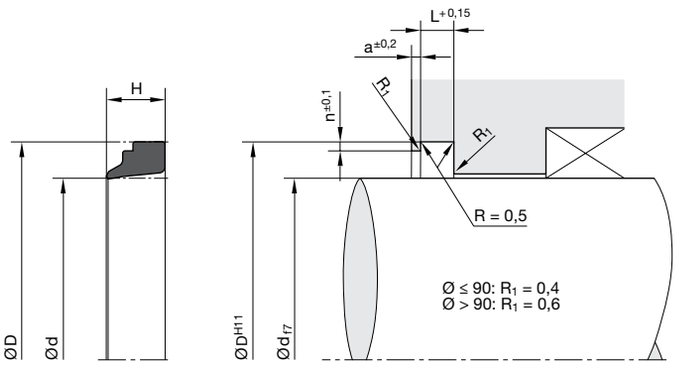

For surface finish, lead in chamfer and other installation dimensions see „General installation guidelines“.

d	D	H	L	a	n	Order code
12	20	7	4	1	1	A1 1010 P5008
14	22	7	4	1	1	A1 1015 P5008
16	24	7	4	1	1	A1 1025 P5008
18	26	7	4	1	1	A1 1035 P5008
20	28	7	4	1	1	A1 2005 P5008
22	30	7	4	1	1	A1 2010 P5008
25	33	7	4	1	1	A1 2025 P5008
28	36	7	4	1	1	A1 2035 P5008
30	38	7	4	1	1	A1 3005 P5008
32	40	7	4	1	1	A1 3010 P5008
35	43	7	4	1	1	A1 3025 P5008
36	44	7	4	1	1	A1 3030 P5008
38	46	7	4	1	1	A1 3035 P5008
40	48	7	4	1	1	A1 4005 P5008
42	50	7	4	1	1	A1 4015 P5008
45	53	7	4	1	1	A1 4030 P5008
48	56	7	4	1	1	A1 4050 P5008
50	58	7	4	1	1	A1 5005 P5008
50	62	10	5.5	1.5	1.5	A1 5010 P5008
55	63	7	4	1	1	A1 5035 P5008
56	64	7	4	1	1	A1 5040 P5008
60	68	7	4	1	1	A1 6005 P5008
62	70	7	4	1	1	A1 6015 P5008
63	71	7	4	1	1	A1 6020 P5008
65	73	7	4	1	1	A1 6030 P5008
70	78	7	4	1	1	A1 7005 P5008
70	82	10	5.5	1.5	1.5	A1 7008 P5008
75	83	7	4	1	1	A1 7025 P5008
80	88	7	4	1	1	A1 8002 P5008
80	92	10	5.5	1.5	1.5	A1 8003 P5008
85	93	7	4	1	1	A1 8025 P5008
90	98	7	4	1	1	A1 9005 P5008
95	103	7	4	1	1	A1 9030 P5008
97	105	7	4	1	1	A1 9045 P5008

Further sizes on request.

Tel: +45 63 12 83 00 | Email: ps@hymatik.com | www.hymatik.com | Hvidkaervej 27a, DK-5250 Odense SV, Denmark

Wiper ring

A1 (TPU)

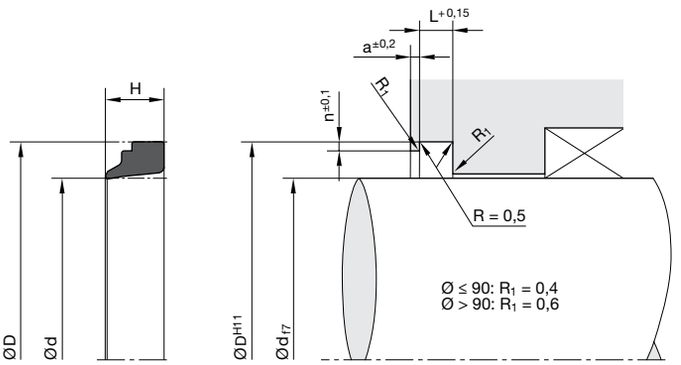

For surface finish, lead in chamfer and other installation dimensions see „General installation guidelines“.

d	D	H	L	a	n	Order code
100	108	7	4	1	1	A1 A010 P5008
105	117	10	5.5	1.5	1.5	A1 A035 P5008
110	122	10	5.5	1.5	1.5	A1 B010 P5008
120	132	10	5.5	1.5	1.5	A1 C010 P5008
125	137	10	5.5	1.5	1.5	A1 C020 P5008
128	140	10	5.5	1.5	1.5	A1 C035 P5008
130	142	10	5.5	1.5	1.5	A1 D010 P5008
140	152	10	5.5	1.5	1.5	A1 E010 P5008
145	157	10	5.5	1.5	1.5	A1 E035 P5008
150	162	10	5.5	1.5	1.5	A1 F005 P5008
160	172	10	5.5	1.5	1.5	A1 G010 P5008
170	182	10	5.5	1.5	1.5	A1 H010 P5008
180	192	10	5.5	1.5	1.5	A1 J010 P5008
190	202	10	5.5	1.5	1.5	A1 K015 P5008
200	212	10	5.5	1.5	1.5	A1 L003 P5008
220	235	13	6.5	2	2	A1 M010 P5008
230	245	13	6.5	2	2	A1 M016 P5008
240	255	13	6.5	2	2	A1 N015 P5008
260	275	13	6.5	2	2	A1 O005 P5008

Further sizes on request.

Tel: +45 63 12 83 00 | Email: ps@hymatik.com | www.hymatik.com | Hvidkaervej 27a, DK-5250 Odense SV, Denmark

Wiper ring with metal case

AF



The wear-resistant Ultrathan® AF wiper ring serves to prevent ingress of dust, dirt, sand and swarf into the hydraulic cylinder. This reduces the risk of scoring on the piston rod caused by external contamination embedded in the guidance. The good wiping effect is achieved by the special design of the wiper lip.
The proven P5008 polyurethane compound stands for abrasion resistance, minor permanent deformation and robustness against external mechanical impact. The wiper is securely held in place in the axially open groove via press-fit of the metal jacket vis-à-vis the inner groove diameter. As the wiper lip is flush with the cylinder head it is largely protected against external mechanical damage.

- Robust seal profile for harshest operating conditions.
- Extreme wear resistance.
- Suitable for fully automatic installation.
- Dimensions according to DIN ISO 6195, Type B.
- Simple fabrication of the housing.

Range of Application

Hydraulic cylinders and valve tappets

Operating temperature	-35 °C to +100 °C
Sliding speed	≤ 2 m/s

Compounds

Standard material of the elastomer part is Ultrathan® P5008, a polyurethane-based Parker compound with a hardness of approx. 93 Shore A. In comparison with other polyurethane materials currently available on the market, it excels because of its increased heat and wear resistance.
For low temperatures, the material Ultrathan® P5009 is recommended.

Installation

The profile AF Ultrathan® wiper rings are manufactured with a slightly oversized outer diameter D, thus ensuring a secure press fit in the groove D^{H8} after installation. Any contact of the wiper lip with piston rod eyes or other connecting parts should be avoided.

In case of special operating conditions (specific pressure loads, temperature, speed, use in water, HFA, HFB fluids etc.), please contact our consultancy service for a selection of the material and design best suiting your particular application requirements.

Tel: +45 63 12 83 00 | Email: ps@hymatik.com | www.hymatik.com | Hvidkaervej 27a, DK-5250 Odense SV, Denmark

Wiper ring with metal case

AF

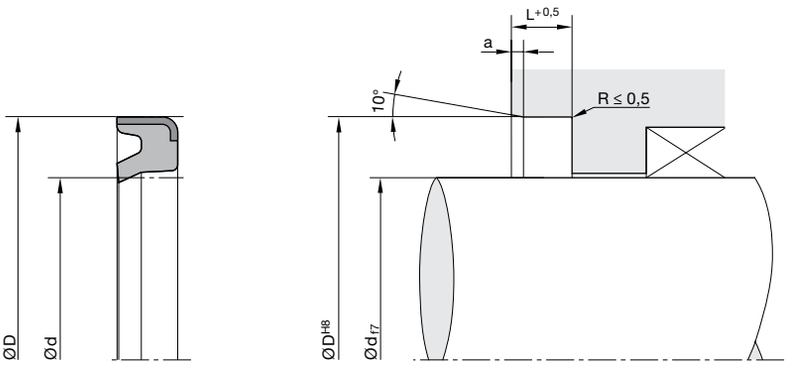

For surface finish, lead in chamfer and other installation dimensions see „General installation guidelines“.

d	D	L	a	ISO[1)]	Order code
30	40	6	1		AF 3040 Z5071
36	48	6	1		AF 3648 Z5071
40	52	6	1		AF 4052 Z5071
45	60	7.5	1		AF 4560 Z5071
50	65	7.5	1		AF 5064 Z5071
56	70	7.5	1		AF 5656 Z5071
60	70	7	1		AF 6005 Z5071
60	75	-	0.7		AF 6028 Z5071
63	73	7	1	·	AF 6375 Z5071
63	78	7.5	1		AF 6378 Z5071
65	79	8	1.5		AF 6505 Z5071
65	80	5	0.7		AF 6509 Z5071
70	80	7	1	·	AF 7005 Z5071
70	84	8	1.5		AF 7016 Z5071
70	85	7.5	1		AF 7085 Z5071
71	86	5	0.7		AF 7110 Z5071
75	90	5	0.7		AF 7590 Z5071
80	94	8	1.5		AF 8013 Z5071
80	95	5	0.7		AF 8005 Z5071
85	99	8	1.5		AF 8509 Z5071
90	100	7	1	·	AF 9020 Z5071
90	104	8	1.5		AF 9033 Z5071
90	105	6	1		AF 9030 Z5071
90	110	10	2		AF 9037 Z5071
95	109	8	1.5		AF 9505 Z5071
100	115	7	1		AF A016 Z5071
101.6	114	8	1.5		AF A024 Z5071
110	125	9	1.5	·	AF B025 Z5071
110	126	9	1.5		AF B009 Z5071
110	130	10	2		AF B011 Z5071
120	140	10	2		AF C024 Z5071

1) DIN ISO 6195, Type B
Further sizes on request.

Tel: +45 63 12 83 00 | Email: ps@hymatik.com | www.hymatik.com | Hvidkaervej 27a, DK-5250 Odense SV, Denmark

Wiper ring with metal case

AG



The wear-resistant Ultrathan® AG wiper ring serves to prevent ingress of dust, dirt, sand and swarf at the rod eyes of a hydraulic cylinder. This reduces the risk of "seizure" on the swivel bolt due to external contamination.The good wiping effect is achieved by the special design of the wiper lip.
In addition, the wiper lip opens up during lubrication and allows excess grease to escape. The proven P5008 polyurethane compound stands for abrasion resistance, minor permanent deformation and robustness against external mechanical impact. The wiper is securely held in place in the axially open groove via press-fit of the metal jacket vis-à-vis the inner groove diameter. As the wiper lip is flush with the rod eye it is largely protected against external mechanical damage.

- Robust seal profile for harshest operating conditions.
- Extreme wear resistance.
- Suitable for fully automatic installation.
- Simple fabrication of the housing.

Range of Application

Hydraulic cylinders and valve tappets

Operating temperature	-35 °C to +100 °C
Sliding speed	≤ 2 m/s

Compounds

Standard material of the elastomer part is Ultrathan® P5008, a polyurethane-based Parker compound with a Shore A hardness of approx. 93. In comparison with other polyurethane materials currently available on the market, it excels because of its increased heat and wear resistance.
For low temperatures, the material Ultrathan® P5009 is recommended.

Installation

The profile AG Ultrathan® wiper rings are manufactured with a slightly oversized outer diameter D, thus ensuring a secure press fit in the groove D^{H8} after installation. Any contact of the wiper lip with piston rod eyes or other connecting parts should be avoided.

In case of special operating conditions (specific pressure loads, temperature, speed, use in water, HFA, HFB fluids etc.), please contact our consultancy service for a selection of the material and design best suiting your particular application requirements.

Tel: +45 63 12 83 00 | Email: ps@hymatik.com | www.hymatik.com | Hvidkaervej 27a, DK-5250 Odense SV, Denmark

Wiper ring with metal case

AG

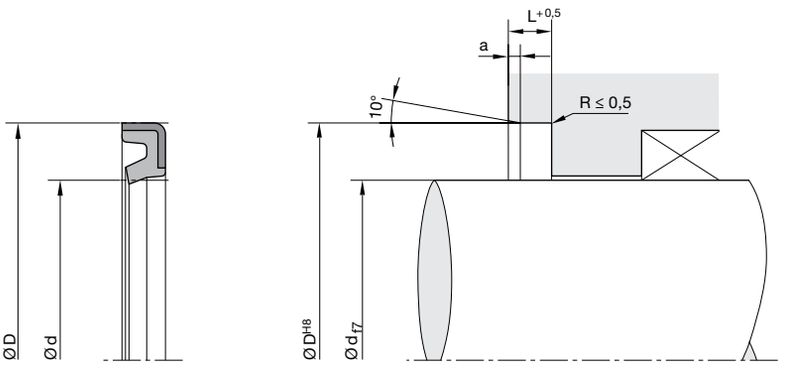

For surface finish, lead in chamfer and other installation dimensions see „General installation guidelines“.

d	D	L	a	Order code
25	35	4	1	AG 2535 Z5071
30	40	4	1	AG 3040 Z5071
35	45	4	1	AG 3545 Z5071
38	48	4	1	AG 3848 Z5071
40	50	4	1	AG 4050 Z5071
45	55	4	1	AG 4555 Z5071
50	60	5	1	AG 5060 Z5071
50	65	5	1	AG 050F Z5071
55	65	4.2	1	AG 5565 Z5071
60	70	4.5	1	AG 6071 Z5071
60	75	5	1	AG 6028 Z5071
63	80	5	1	AG 6380 Z5071
65	80	5	1	AG 6509 Z5071
70	80	4.5	1	AG 7081 Z5071
70	85	5	1	AG 7005 Z5071
70	85	7.5	1	AG 7085 Z5071
71	86	5	1	AG 7110 Z5071
75	90	5	1	AG 7590 Z5071
80	90	4.5	1	AG 8091 Z5071
80	95	5	1	AG 8005 Z5071
80	95	6.5	1	AG 8006 Z5071
85	95	4.5	1	AG 8596 Z5071
85	100	4	1	AG 8500 Z5071
85	100	6	1	AG 8506 Z5071
90	105	4	1	AG 9005 Z5071
90	105	6	1	AG 9030 Z5071
95	110	6.5	1	AG 9510 Z5071
95	110	8	1.5	AG 9511 Z5071
100	115	7	1	AG A016 Z5071
100	120	6.5	1	AG A020 Z5071
105	120	7	1	AG A105 Z5071
110	125	6.5	1	AG B023 Z5071
110	125	8	1.5	AG B110 Z5071
110	130	4.5	1	AG B131 Z5071
120	135	6.5	1	AG C006 Z5071
120	135	8	1.5	AG C120 Z5071

Further sizes on request.

Tel: +45 63 12 83 00 | Email: ps@hymatik.com | www.hymatik.com | Hvidkaervej 27a, DK-5250 Odense SV, Denmark

Double wiper with metal case

AH



The Ultrathan® AH double wiper serves to prevent ingress of dust, dirt, sand and swarf into hydraulic cylinders. This reduces the risk of scoring on the piston rod caused by external contaminants embedded in the guidance. The good wiping effect is achieved by the special design of the wiper lip. In addition, the sealing lip facing the medium reduces the residual oil film. The proven Ultrathan® P5008 compound stands for high abrasion resistance, minor permanent deformation, and robustness against external mechanical impact. The wiper is securely held in place in the axially open installation housing by means of a press fit of the metal case vis-à-vis the inner diameter of the groove.

- Robust seal profile for harshest operating conditions.
- Extreme wear resistance.
- Suitable for fully automatic installation.
- Product geometry prevents dirt deposits at the front face of the cylinder.
- Simple fabrication of the housing.

Range of Application

Hydraulic cylinders

Operating temperature	-35 °C to +100 °C
Sliding speed	≤ 2 m/s

Compounds

Ultrathan® P5008 is a polyurethane-based Parker compound with a hardness of approx. 93 Shore A.
In comparison with other polyurethane materials currently available on the market it excels because of its increased heat and wear resistance.
For low temperatures, the material Ultrathan® P5009 is recommended.

Installation

The profile AH double wiper rings are manufactured with a slightly oversized outer diameter D, thus ensuring a secure press fit in the groove D^{H8} after installation. Any contact of the wiper lip with piston rod eyes or other connecting parts should be avoided.

In case of special operating conditions (specific pressure loads, temperature, speed, use in water, HFA, HFB fluids etc.), please contact our consultancy service for a selection of the material and design best suiting your particular application requirements.

Tel: +45 63 12 83 00 | Email: ps@hymatik.com | www.hymatik.com | Hvidkaervej 27a, DK-5250 Odense SV, Denmark

Double wiper with metal case

AH

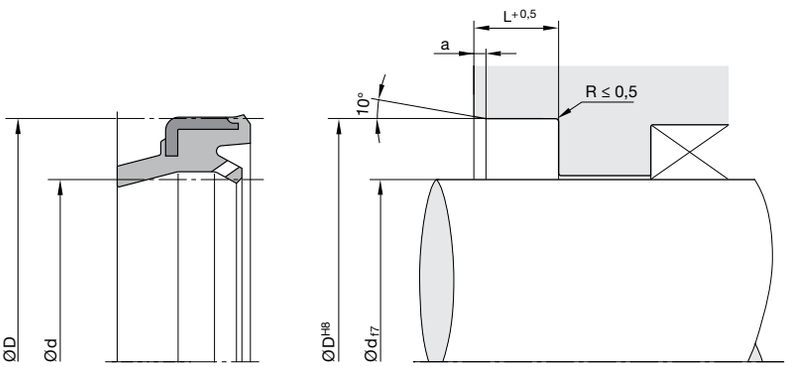

For surface finish, lead in chamfer and other installation dimensions see „General installation guidelines“.

d	D	L	a	ISO[1)]	Order code
20	30	7	1	·	AH 2030 Z5071*
22	32	7	1	·	AH 2232 Z5071*
25	35	7	1	·	AH 2535 Z5071*
28	38	7	1	·	AH 2838 Z5071*
32	42	7	1	·	AH 3242 Z5071*
36	46	7	1	·	AH 3646 Z5071*
40	50	7	1	·	AH 4050 Z5071*
45	55	7	1	·	AH 4555 Z5071*
50	60	7	1	·	AH 5060 Z5071*
56	66	7	1	·	AH 5666 Z5071*
60	70	7	1	·	AH 6070 Z5071
63	73	7	1	·	AH 6373 Z5071*
70	80	7	1	·	AH 7080 Z5071*
70	80	7	1.5		AH 7008 Z5071*
75	89	8	1.5		AH 7589 Z5071*
80	90	7	1	·	AH 8090 Z5071*
80	90	8	1.5		AH 8007 Z5071
80	94	8	1.5		AH 8095 Z5071
85	99	8	1.5		AH 8599 Z5071
90	100	7	1	·	AH 9010 Z5071*
90	100	9.5	1.5		AH 9007 Z5071
90	104	8	1.5		AH 9004 Z5071
95	109	8	1.5		AH 9509 Z5071
100	110	7	1.5		AH A010 Z5071
100	114	8	1.5		AH A114 Z5071
100	115	9	1	·	AH A115 Z5071*
115	125	9	1	·	AH A125 Z5071*
125	140	9	1	·	AH B140 Z5071*

1) DIN ISO 6195, Type B
* Moulds not available on the date of printing.
Further sizes on request.

Tel: +45 63 12 83 00 | Email: ps@hymatik.com | www.hymatik.com | Hvidkaervej 27a, DK-5250 Odense SV, Denmark

Wiper ring with metal case

AM



The AM wiper serves to prevent ingress of dust, dirt, sand and swarf. This is achieved by its special design which largely prevents scoring, protects the guiding parts and extends the service life of the seals. An oversized diameter ensures interference fit in the groove recess, thus preventing ingress of foreign particles at the wiper s outer diameter. The wiper ring of the AM product series can simply be press-fit into the cylinder liner and requires no special retention rings.

- Good wear resistance.
- Suitable for fully automatic installation.
- High temperature resistance in case of suitable compound selection.
- Excellent media resistance in case of suitable compound selection.

Range of Application

Hydraulic and pneumatic cylinders, valve lifters, etc.

Operating temperature	-35 °C to +100 °C
Pneumatics	-35 °C to +80 °C
Sliding speed	≤ 2 m/s

Compounds

Standard compound for the rubber part of the wiper is a NBR elastomer with a hardness of approx. 90 Shore A (Z5053). Additionally, a large number of dimensions is also available with FKM elastomer (Z5066).

Installation

The profile AM wiper rings are manufactured with a slightly oversized outer diameter D, thus ensuring a secure press fit in the groove D^{H8} after installation. Any contact of the wiper lip with piston rod eyes or other connecting parts should be avoided.

In case of special operating conditions (specific pressure loads, temperature, speed, use in water, HFA, HFB fluids etc.), please contact our consultancy service for a selection of the material and design best suiting your particular application requirements.

Tel: +45 63 12 83 00 | Email: ps@hymatik.com | www.hymatik.com | Hvidkaervej 27a, DK-5250 Odense SV, Denmark

Wiper ring with metal case

AM

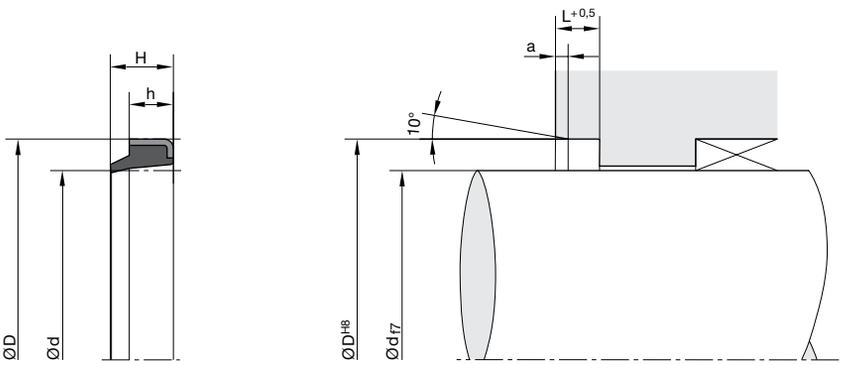

For surface finish, lead in chamfer and other installation dimensions see „General installation guidelines“.

d	D	H	h/L	a	ISO[1)]	Order code
6	13	4.5	3	0.6		AM 0018 Z5053
10	16	4.5	3	0.6		AM 1016 Z5053
10	20	8	5	1		AM 1020 Z5053
12	20	6	4	0.8		AM 1029 Z5053
12	22	8	5	1		AM 1030 Z5053
14	22	4	3	0.6		AM 1035 Z5053
16	22	4	3	0.6		AM 1053 Z5053
16	26	8	5	1		AM 1055 Z5053
18	28	10	7	1.4	·	AM 1080 Z5053
20	28	5	3.5	0.8		AM 2001 Z5053
20	30	6	4	0.8		AM 2003 Z5053
20	30	10	7	1.4	·	AM 2005 Z5053
22	28	9	5	1		AM 2012 Z5053
22	32	10	7	1.4	·	AM 2015 Z5053
25	35	10	7	1.4	·	AM 2048 Z5053
28	40	10	7	1.4		AM 2087 Z5053
30	40	8	5	1		AM 3010 Z5053
30	40	10	7	1.4		AM 3012 Z5053
32	45	8	4	0.8		AM 3020 Z5053
32	45	10	7	1.4		AM 3022 Z5053
35	45	10	7	1.4		AM 3050 Z5053
36	45	10	7	1.4		AM 3054 Z5053
40	50	8	5	1		AM 4004 Z5053
40	50	10	7	1.4	·	AM 4005 Z5053
45	55	10	7	1.4	·	AM 4050 Z5053
45	60	10	7	1.4		AM 4052 Z5053
50	56	8	5	1		AM 5004 Z5053
50	60	8	5	1		AM 5007 Z5053
50	60	10	7	1.4	·	AM 5006 Z5053
50	65	8	5	1		AM 5010 Z5053
55	63	10	7	1.4		AM 5050 Z5053
55	65	10	7	1.4		AM 5048 Z5053
56	66	10	7	1.4	·	AM 5052 Z5053
60	70	10	7	1.4		AM 6007 Z5053
60	74	8	5	0.8		AM 6008 Z5053
63	75	10	7	1.4		AM 6035 Z5053
65	75	10	7	1.4		AM 6050 Z5053
70	80	10	7	1.4	·	AM 7008 Z5053
75	85	10	7	1.4		AM 7050 Z5053
80	90	10	7	1.4	·	AM 8009 Z5053
85	95	10	7	1.4		AM 8050 Z5053
90	100	7	5	1		AM 9009 Z5053
90	100	10	7	1.4	·	AM 9010 Z5053
95	106	10	7	1.4		AM 9507 Z5053
100	110	7	5	1		AM A007 Z5053
100	110	10	7	1.4		AM A010 Z5053
110	120	10	7	1.4		AM B020 Z5053
120	130	10	7	1.4		AM C030 Z5053
125	140	12	9	1.8	·	AM C050 Z5053
130	145	12	9	1.8		AM D001 Z5053
140	155	12	9	1.8	·	AM E005 Z5053
150	166	12	8	1.8		AM F003 Z5053
160	176	12	8	1.8		AM G008 Z5053
165	180	12	8	1.8		AM G060 Z5053
170	185	14	10	2		AM H015 Z5053
180	195	14	10	2		AM J009 Z5053
200	220	16	12	2.4		AM L020 Z5053
240	260	16	12	2.4		AM N010 Z5092

1) DIN ISO 6195, Type B
Further sizes on request.

Tel: +45 63 12 83 00 | Email: ps@hymatik.com | www.hymatik.com | Hvidkaervej 27a, DK-5250 Odense SV, Denmark

Slipper Seal® Double wiper

AD



The AD double wiper featuring a Slipper Seal® design consists of a PTFE slide ring for the wiper function and an elastomer O-ring as a preloading element. It combines two functions: wiping against external contamination and a sealing function that reduces the residual oil film. The AD wiper is characterized by low break-away and sliding friction and can therefore be used in low-lube conditions as well.

Due to the material combination of the slide ring (PTFE) and the O-ring (elastomer), this product is suitable for a wide range of applications, especially for aggressive media and/or high temperatures. Several compounds can alternatively be selected according to the specific application profile.

Wiper rings serve to safeguard axially movable rods and pistons against ingress of dust, dirt, sand and swarf, thus protecting the guiding elements and seals and extending the service life of the sealing system.

- Excellent wear resistance.
- Minimal break-away and dynamic friction and no stick-slip tendency ensures uniform motion even at low speeds.
- Good energy efficiency due to low friction.
- High temperature resistance assured by suitable O-ring compound selection.
- Adaptable to nearly all media thanks to high chemical resistance of the sealing ring and large O-ring compound selection.
- Dimensions according to DIN ISO 6195, Type C or Type D.
- Available in diameters from 4 to 4500 mm.
- Installation in closed and undercut housings.

Range of Application

The AD product series is suitable for a wide range of applications, especially for aggressive media and/or high temperatures.

Operating temperature	-30 °C to +100 °C [1)]
with FKM O-ring	-30 °C to +200 °C
Sliding speed	≤ 4 m/s

[1)] With deviation from standard temperature range, please contact our consultancy service for adequate O-ring compound.

Compounds

Wiper ring: Polon® 052, PTFE with 40 % bronze.
O-ring: N0674, NBR elastomer with approx. 70 Shore A.

In case of special operating conditions (specific pressure loads, temperature, speed, use in water, HFA, HFB fluids etc.), please contact our consultancy service for a selection of the material and design best suiting your particular application requirements.

Tel: +45 63 12 83 00 | Email: ps@hymatik.com | www.hymatik.com | Hvidkaervej 27a, DK-5250 Odense SV, Denmark

Slipper Seal® Double wiper AD

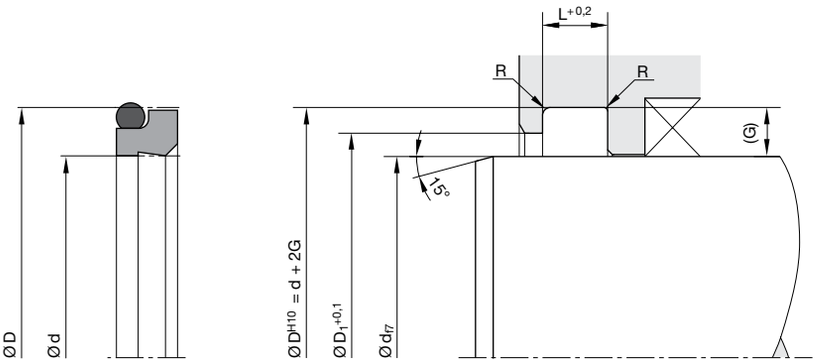

For surface finish, lead in chamfer and other installation dimensions see „General installation guidelines“.

Housing dimensions

Series no.	Cross-section	O-ring cross-section (mm)	Recommended Ø range d (mm) ≥	<	Groove width L (mm)	Groove depth G (mm)	Ø Retainer ring D_1 (mm)	Radius max. R (mm)	ISO[1]	ISO[2]
00590	A	1.78	6	12	3.7	2.40	d + 1.5	0.4	•	
00590	B	2.62	12	65	5.0	3.40	d + 1.5	0.4	•	
00590	C	3.53	65	250	6.0	4.40	d + 2.0	0.4		
00590	D	5.33	250	420	8.4	6.10	d + 2.0	0.4		
00590	E	6.99	420	650	11.0	8.00	d + 2.5	0.4		
00590	G	8.40	650	1000	14.0	10.00	d + 2.5	0.4		
00590	K	1.78	6	25	4.0	3.00	d + 2.5	0.4		•
00590	L	2.62	28	50	5.0	4.00	d + 3.0	0.4		•
00590	M	3.53	56	100	6.0	5.00	d + 3.0	0.4		•
00590	N	5.33	110	200	8.5	7.50	d + 4.0	0.4		•
00590	O	6.99	220	360	12.0	10.00	d + 6.0	0.4		•

1) Housing dimensions according to DIN ISO 6195, Type D.
2) Housing dimensions according to DIN ISO 6195, Type C.

Tel: +45 63 12 83 00 | Email: ps@hymatik.com | www.hymatik.com | Hvidkaervej 27a, DK-5250 Odense SV, Denmark

Slipper Seal® Double wiper AD

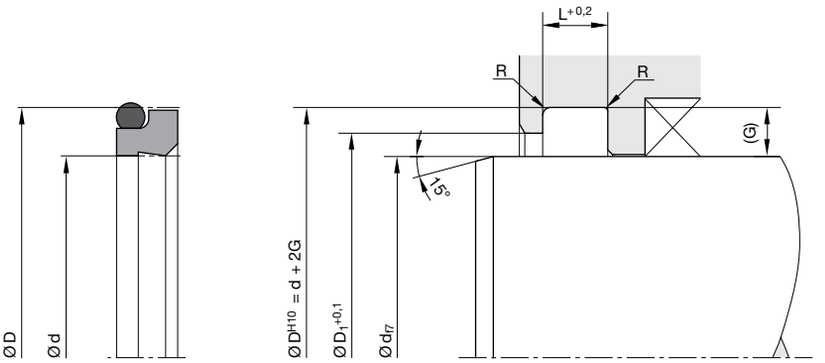

For surface finish, lead in chamfer and other installation dimensions see „General installation guidelines“.

Ordering example

Rod diameter 40 mm

AD 0400 052 00591 B (40 × 46.8 × 5)

AD	Profile			
0400	Rod diameter × 10			
052	Compound			
00591	Series no. / compound code O-ring			
	00590	without O-ring		
	00591	N0674 (NBR)	70±5 Shore A	-30 / +110°C
	00592	V0747 (FKM)	75±5 Shore A	-25 / +200°C
	00593	N3575 (NBR)	75±5 Shore A	-50 / +110°C
	00594	E0540 (EPDM)	80±5 Shore A	-40 / +150°C
	00595	N3578 (NBR)	75±5 Shore A	-30 / +110°C
	00596	N0552 (NBR)	90±5 Shore A	-30 / +100°C
	00597	N1173 (HNBR)	70±5 Shore A	-30 / +150°C
B	Cross-section			

Please note:
For certain applications, it might be convenient to use a non-standard cross-section reduced or heavier. In these cases, please replace the standard cross-section code (in above example: „B“) by the one you require (for example „A“ or „C“).

Tel: +45 63 12 83 00 | Email: ps@hymatik.com | www.hymatik.com | Hvidkaervej 27a, DK-5250 Odense SV, Denmark

Slipper Seal® Double wiper AD

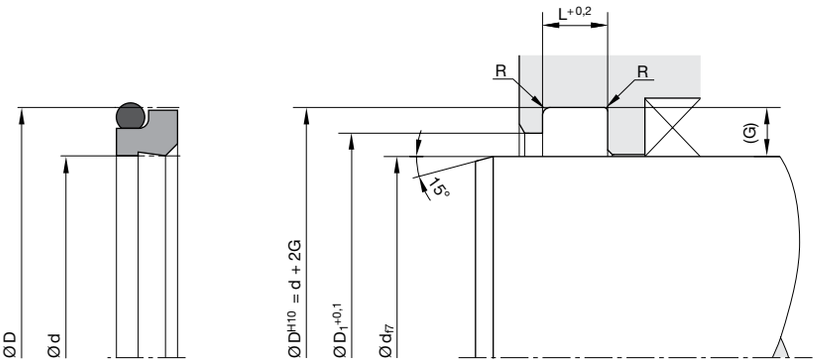

For surface finish, lead in chamfer and other installation dimensions see „General installation guidelines“.

Standard range

Size	Groove				O-ring			ISO[1]
	Ø d (mm)	Ø D (mm)	Ø D_1 (mm)	L (mm)	No.	CS (mm)	ID (mm)	
0040	4	8.80	5.50	3.70	2-009	1.78	5.28	•
0050	5	9.80	6.50	3.70	2-010	1.78	6.07	•
0070	7	11.80	8.50	3.70	2-011	1.78	7.65	
0080	8	12.80	9.50	3.70	2-012	1.78	9.25	•
0100	10	14.80	11.50	3.70	2-013	1.78	10.82	•
0120	12	18.80	13.50	5	2-113	2.62	13.94	•
0140	14	20.80	15.50	5	2-114	2.62	15.54	•
0150	15	21.80	16.50	5	2-115	2.62	17.12	
0160	16	22.80	17.50	5	2-116	2.62	18.72	•
0180	18	24.80	19.50	5	2-117	2.62	20.29	•
0200	20	26.80	21.50	5	2-118	2.62	21.89	•
0240	24	30.80	25.50	5	2-120	2.62	25.07	
0250	25	31.80	26.50	5	2-121	2.62	26.64	•
0260	26	32.80	27.50	5	2-122	2.62	28.24	
0280	28	34.80	29.50	5	2-123	2.62	29.82	•
0300	30	36.80	31.50	5	2-124	2.62	31.42	
0320	32	38.80	33.50	5	2-126	2.62	34.59	•
0350	35	41.80	36.50	5	2-127	2.62	36.17	
0370	37	43.80	38.50	5	2-129	2.62	39.34	
0380	38	44.80	39.50	5	2-130	2.62	40.94	
0400	40	46.80	41.50	5	2-131	2.62	42.52	•
0420	42	48.80	43.50	5	2-132	2.62	44.12	
0450	45	51.80	46.50	5	2-134	2.62	47.29	•
0480	48	54.80	49.50	5	2-136	2.62	50.47	
0500	50	56.80	51.50	5	2-137	2.62	52.07	•
0520	52	58.80	53.50	5	2-138	2.62	53.64	
0550	55	61.80	56.50	5	2-140	2.62	56.82	
0580	58	64.80	59.50	5	2-142	2.62	59.99	

[1] Housing dimensions according to DIN ISO 6195, Type C or Type D.
Further sizes on request.

Tel: +45 63 12 83 00 | Email: ps@hymatik.com | www.hymatik.com | Hvidkaervej 27a, DK-5250 Odense SV, Denmark

Slipper Seal® Double wiper

AD

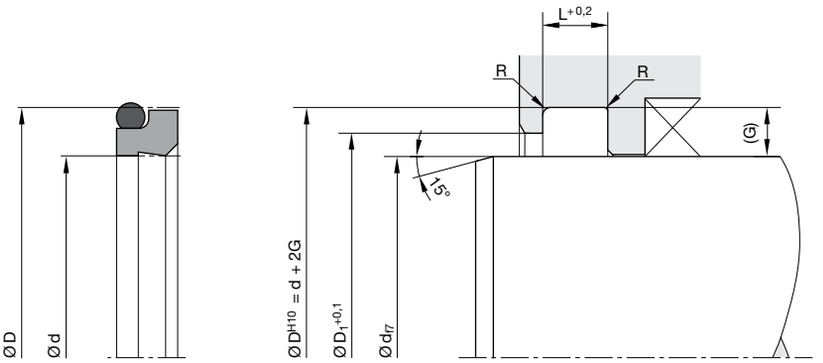

For surface finish, lead in chamfer and other installation dimensions see „General installation guidelines“.

Standard range

Size	Groove				O-ring			ISO[1]
	Ø d (mm)	Ø D (mm)	Ø D_1 (mm)	L (mm)	No.	CS (mm)	ID (mm)	
0600	60	66.80	61.50	5	2-143	2.62	61.60	
0650	65	73.80	67	6	2-231	3.53	66.27	
0700	70	78.80	72	6	2-233	3.53	72.62	•
0750	75	83.80	77	6	2-234	3.53	75.79	
0800	80	88.80	82	6	2-236	3.53	82.14	•
0850	85	93.80	87	6	2-237	3.53	85.32	
0900	90	98.80	92	6	2-239	3.53	91.67	•
0950	95	103.80	97	6	2-241	3.53	98.02	
1000	100	108.80	102	6	2-242	3.53	101.19	•
1100	110	118.80	112	6	2-245	3.53	110.72	•
1200	120	128.80	122	6	2-249	3.53	123.42	
1250	125	133.80	127	6	2-250	3.53	126.59	•
1300	130	138.80	132	6	2-252	3.53	132.94	
1400	140	148.80	142	6	2-255	3.53	142.47	
1500	150	158.80	152	6	2-258	3.53	151.99	
1550	155	163.80	157	6	2-259	3.53	158.34	
1600	160	168.80	162	6	2-260	3.53	164.69	
1700	170	178.80	172	6	2-261	3.53	171.04	
1750	175	183.80	177	6	2-262	3.53	177.39	
1800	180	188.80	182	6	2-263	3.53	183.74	
1850	185	193.80	187	6	2-263	3.53	183.74	
1900	190	198.80	192	6	2-264	3.53	190.09	
1950	195	203.80	197	6	2-265	3.53	196.44	
2000	200	208.80	202	6	2-266	3.53	202.79	
2100	210	218.80	212	6	2-267	3.53	209.14	
2200	220	228.80	222	6	2-269	3.53	221.84	
2250	225	233.80	227	6	2-270	3.53	228.19	
2300	230	238.80	232	6	2-271	3.53	234.54	

[1] Housing dimensions according to DIN ISO 6195, Type C or Type D.
Further sizes on request.

Tel: +45 63 12 83 00 | Email: ps@hymatik.com | www.hymatik.com | Hvidkaervej 27a, DK-5250 Odense SV, Denmark

Slipper Seal® Double wiper AD

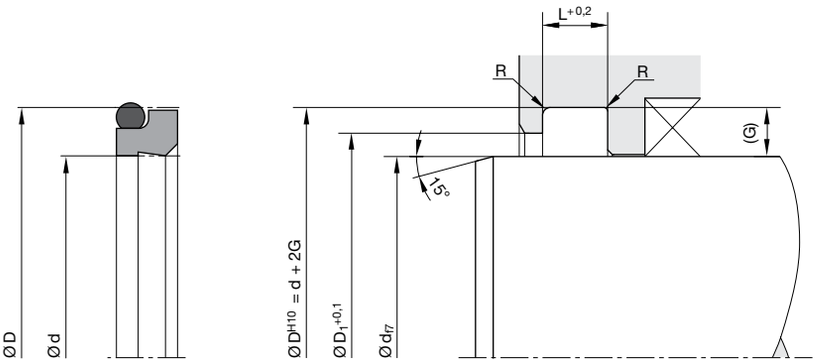

For surface finish, lead in chamfer and other installation dimensions see „General installation guidelines“.

Standard range

Size	Groove				O-ring			ISO[1]
	Ø d (mm)	Ø D (mm)	Ø D_1 (mm)	L (mm)	No.	CS (mm)	ID (mm)	
2400	240	248.80	242	6	2-272	3.53	240.89	
2500	250	258.80	252	6	2-274	3.53	253.59	•
2600	260	272.20	262	8.40	2-378	5.33	266.07	
2700	270	282.20	272	8.40	2-379	5.33	278.77	
2800	280	292.20	282	8.40	2-379	5.33	278.77	•
2900	290	302.20	292	8.40	2-380	5.33	291.47	
3000	300	312.20	302	8.40	2-381	5.33	304.17	
3100	310	322.20	312	8.40	2-381	5.33	304.17	
3200	320	332.20	322	8.40	2-382	5.33	329.57	•
3300	330	342.20	332	8.40	2-382	5.33	329.57	
3400	340	352.20	342	8.40	2-382	5.33	329.57	
3500	350	362.20	352	8.40	2-383	5.33	354.97	
3600	360	372.20	362	8.40	2-383	5.33	354.97	•
3700	370	382.20	372	8.40	2-383	5.33	354.97	
3800	380	392.20	382	8.40	2-384	5.33	380.37	
3900	390	402.20	392	8.40	2-384	5.33	380.37	
4000	400	412.20	402	8.40	2-385	5.33	405.26	
4100	410	422.20	412	8.40	2-385	5.33	405.26	
4200	420	432.20	422.50	8.40	2-386	5.33	430.66	
4300	430	446	432.50	11	2-463	6.99	430.66	
4400	440	456	442.50	11	2-464	6.99	443.38	
4500	450	466	452.50	11	2-465	6.99	456.03	
4600	460	476	462.50	11	2-466	6.99	468.76	
4700	470	486	472.50	11	2-466	6.99	468.76	
4800	480	496	482.50	11	2-467	6.99	481.46	
4900	490	506	492.50	11	2-468	6.99	494.16	
5000	500	516	502.50	11	2-469	6.99	506.86	

[1] Housing dimensions according to DIN ISO 6195, Type C or Type D.
Further sizes on request.

Tel: +45 63 12 83 00 | Email: ps@hymatik.com | www.hymatik.com | Hvidkaervej 27a, DK-5250 Odense SV, Denmark

Double wiper

AV



The Ultrathan® AV double wiper serves to prevent ingress of dust, dirt, sand and swarf into hydraulic cylinders. The dirt shield formed on the wiper prevents moisture from migrating underneath the wiper into the groove, thus preventing corrosion which frequently occurs in the groove. The good wiping effect is achieved by the special design of the wiper lip. The proven Ultrathan® P5008 compound stands for high abrasion resistance, minor permanent deformation, and robustness against external mechanical impact. Due to the press fit in the groove and a pressure relief hole the risk of the wiper being extruded from the cylinder housing is minimized.

- Robust seal profile for harshest operating conditions.
- Extreme wear resistance.
- Excellent media resistance in case of suitable compound selection.
- Suitable compounds available for special requirements of the chemical process industry.
- Suitable compounds available for special requirements of the food processing industry.
- The dirt shield prevents the intrusion of dirt and moisture in vertical cylinder applications.
- Installation in closed and undercut housings.
- Additional sizes of machined products available on short notice.

Range of Application

The AV wiper is used in hydraulic cylinders and is particularly well-suited for mobile applications.

Operating temperature	-35 °C to +100 °C
Sliding speed	≤ 2 m/s

Compounds

The standard material is Ultrathan® P5008, a Parker compound based on polyurethane with a hardness of approx. 93 Shore A. Compared to off-the-shelf polyurethane grades it is characterized by higher thermal and hydrolysis resistance and a lower compression set.
For low temperatures, the material Ultrathan® P5009 is recommended.

Installation

The profile AV double lip wiper ring can easily be snapped into grooves of simple design. Any contact of the wiper lip with piston rod eyes or other connecting parts should be avoided. However, we recommend the wiper lip to be out-side the housing, so that the wiped-off dirt falls off.
A ring-shaped area for improved abutting of the dirt shield should be provided at the front side of the cylinder.

In case of special operating conditions (specific pressure loads, temperature, speed, use in water, HFA, HFB fluids etc.), please contact our consultancy service for a selection of the material and design best suiting your particular application requirements.

Tel: +45 63 12 83 00 | Email: ps@hymatik.com | www.hymatik.com | Hvidkaervej 27a, DK-5250 Odense SV, Denmark

Double wiper

AV

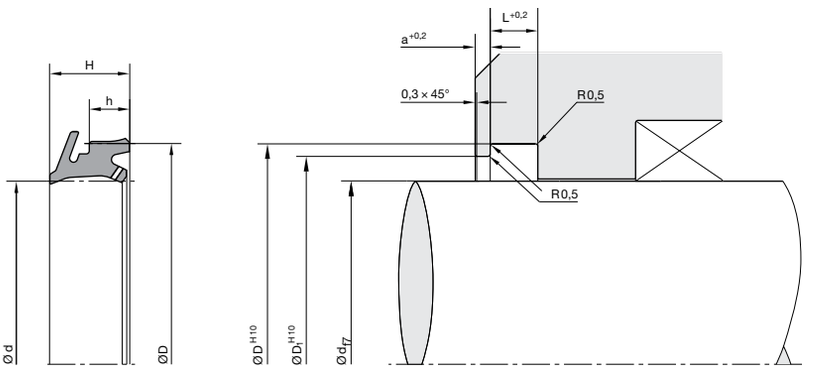

For surface finish, lead in chamfer and other installation dimensions see „General installation guidelines“.

d	D	H	L	a	D_1	Order code
28	36	7.75	4	1	34	AV 2836 P5008*
30	38	7.75	4	1	36	AV 3038 P5008*
36	44	7.75	4	1	42	AV 3644 P5008*
40	48	7.75	4	1	46	AV 4048 P5008
45	53	7.75	4	1	51	AV 4553 P5008
56	68	10	5.5	1.5	65	AV 5668 P5008*
63	75	10	5.5	1.5	72	AV 6375 P5008*
80	92	10	5.5	1.5	89	AV 8092 P5008*
100	115	16	9.5	3	110	AV A115 P5008*
125	140	16	9.5	3	135	AV C140 P5008*
140	155	16	9.5	3	150	AV E155 P5008*
160	175	16	9.5	3	170	AV G160 P5212*
180	195	16	9.5	3	190	AV K195 P5008*
200	215	16	9.5	3	210	AV L215 P5008*

* Moulds not available on the date of printing.

Tel: +45 63 12 83 00 | Email: ps@hymatik.com | www.hymatik.com | Hvidkaervej 27a, DK-5250 Odense SV, Denmark

Double wiper

AY



The wear-resistant Ultrathan® AY double wiper ring serves to prevent ingress of dust, dirt, sand and swarf. This is achieved by its special design which largely prevents scoring, protects the guiding parts and extends the service life of the seals. In addition, the sealing lip facing the media side reduces the residual oil film. The AY double wiper ring closes the cylinder vis-à-vis the environment.
The AY wiper can be installed in undercut grooves without requiring special screwrings or brackets. In addition to higher wear resistance, the utilization of polyurethane offers good resistance against ozone and UV radiation. When PTFE rod seals are used we recommend the combination with the Ultrathan® AY wiper to minimize the residual oil film.

- Extreme wear resistance.
- Excellent media resistance in case of suitable compound selection.
- Suitable compounds available for special requirements of the chemical process industry.
- Suitable compounds available for special requirements of the food processing industry.
- Dimensions according to DIN ISO 6195, Type C.
- Installation in closed and undercut housings.
- Additional sizes of machined products available on short notice.

Range of Application

For axially operated rods in hydraulic and pneumatic working cylinders, tappets and rod guidances.

Operating temperature	-35 °C to +100 °C
Pneumatics	-35 °C to +80 °C
Sliding speed	≤ 2 m/s

Compounds

Ultrathan® P5008 is a polyurethane-based Parker compound with a hardness of approx. 93 Shore A. In comparison with other polyurethane materials currently available on the market it excels because of its increased heat resistance, improved against hydrolysis, and lower compression set values.

Installation

The profile AY double lip wiper ring can easily be snapped into grooves of simple design. Any contact of the wiper lip with piston rod eyes or other connecting parts should be avoided. However, we recommend the wiper lip to be out-side the housing, so that the wiped-off dirt falls off.

In case of special operating conditions (specific pressure loads, temperature, speed, use in water, HFA, HFB fluids etc.), please contact our consultancy service for a selection of the material and design best suiting your particular application requirements.

Tel: +45 63 12 83 00 | Email: ps@hymatik.com | www.hymatik.com | Hvidkaervej 27a, DK-5250 Odense SV, Denmark

Double wiper

AY

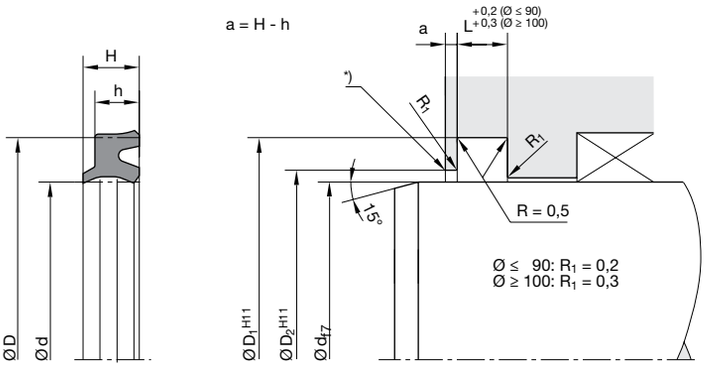

** Edges deburred*

For surface finish, lead in chamfer and other installation dimensions see „General installation guidelines“.

d	D	H	h	D_2	L	ISO[1)]	Order code
8	13	4.1	3.1	10.5	3.5		AY 0080 P5008
10	16	4.8	3.6	12.5	4	·	AY 1003 P5008
12	18	4.8	3.6	14.5	4	·	AY 1020 P5008
14	20	4.8	3.6	16.5	4	·	AY 1040 P5008
15	21	4.8	3.6	17.5	4		AY 1521 P5008
16	22	4.8	3.6	18.5	4	·	AY 1059 P5008
18	24	4.8	3.6	20.5	4	·	AY 1080 P5008
20	26	4.8	3.6	22.5	4	·	AY 2026 P5008
22	28	4.8	3.6	24.5	4	·	AY 2020 P5008
25	31	4.8	3.6	27.5	4	·	AY 2050 P5008
28	36	5.8	4.5	31	5	·	AY 2080 P5008
30	38	5.8	4.5	33	5		AY 3001 P5008
32	40	5.8	4.5	35	5	·	AY 3002 P5008
35	43	5.8	4.5	38	5		AY 3039 P5008
36	44	5.8	4.5	39	5	·	AY 3060 P5008
37	45	5.8	4.5	40	5		AY 3070 P5008
40	48	5.8	4.5	43	5	·	AY 4002 P5008
45	53	5.8	4.5	48	5	·	AY 4045 P5008
50	58	5.8	4.5	53	5	·	AY 5002 P5008
55	65	6.8	5.3	58	6		AY 5050 P5008
56	66	6.8	5.3	59	6	·	AY 5060 P5008
60	70	6.8	5.3	63	6		AY 6003 P5008
63	73	6.8	5.3	66	6	·	AY 6030 P5008
65	75	6.8	5.3	68	6		AY 6065 P5008
70	80	6.8	5.3	73	6	·	AY 7000 P5008
75	85	6.8	5.3	78	6		AY 7085 P5008
80	90	6.8	5.3	83	6	·	AY 8030 P5008
85	95	6.8	5.3	88	6		AY 8050 P5008
90	100	6.8	5.3	93	6	·	AY 9000 P5008
100	110	6.8	5.3	103	6	·	AY A005 P5008
110	125	9.5	7.5	114	8.5	·	AY B000 P5008
120	135	9.5	7.5	124	8.5	·	AY C020 P5205
125	140	9.5	7.5	129	8.5	·	AY C030 P5008
138	158	9.5	7.5	142	8.5		AY D838 P5008
140	155	9.5	7.5	144	8.5	·	AY E001 P5008
160	175	9.5	7.5	164	8.5	·	AY G001 P5008

1) DIN ISO 6195, Type C, for ISO 6020-2 cylinders.
Further sizes on request.

Tel: +45 63 12 83 00 | Email: ps@hymatik.com | www.hymatik.com | Hvidkaervej 27a, DK-5250 Odense SV, Denmark

Tel: +45 63 12 83 00 | Email: ps@hymatik.com | www.hymatik.com | Hvidkaervej 27a, DK-5250 Odense SV, Denmark

Guiding elements

Profile cross-section	Profile reference	Page
Guiding elements		
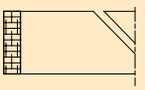	F3	53
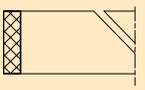	HH	59
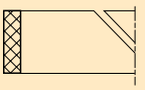	FR	60
	FK	65

Tel: +45 63 12 83 00 | Email: ps@hymatik.com | www.hymatik.com | Hvidkaervej 27a, DK-5250 Odense SV, Denmark

Guiding elements

Guide rings and tapes prevent metallic contact between pistons and cylinders or rods and glands where forces act perpendicular to the direction of movement.
These lateral forces (F) lead to a pressure distribution as shown in fig. 1. In practice, calculation based on the projected surface has proved to be a simple and more useful method. This means that the load carrying area (A) can be calculated from the length (H) multiplied by the diameter (D) (see fig. 2). The surface obtained is about 5 times larger than the assumed bearing area of fig. 1, so that lower specific loads must be reckoned with. In order to obtain the same values for lateral forces "F", the specific load must be only 1/5 of the max. force shown in fig. 1. The indicated permissible specific forces ($F_{perm.}$) take this into account, and the admissible specific pressure mentioned relates to the projected area as shown in fig. 2.

The values of the gaps (e) or shoulder diameters specified on drawings and Tables guarantee maximum efficiency of the guiding elements.
For operation together with a seal, however, the extrusion gap (e) specified for this particular seal is most important. Especially under high pressure the maximum gap behind the seal must be the basis for the determination of the piston-shoulder diameter between seal and guide tape (refer to chapter "Maximum gap allowance"). If the specified nominal measurements and tolerances are used to calculate the groove bottom diameter of the guide tapes, optimum guidance quality will be obtained and metallic contact prevented.

Figure:
H = Length of the guiding tape

Figure 1:

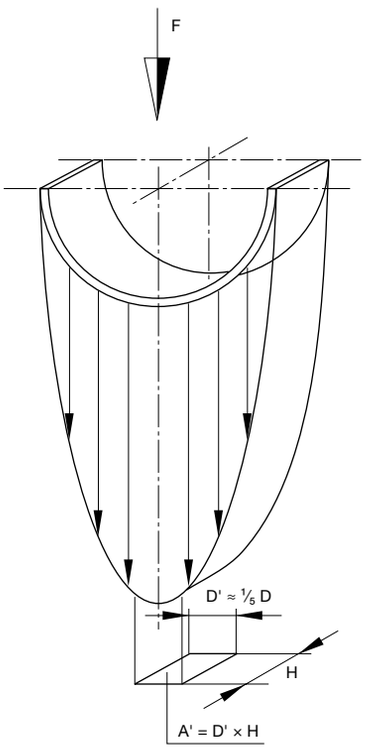

Figure 2:

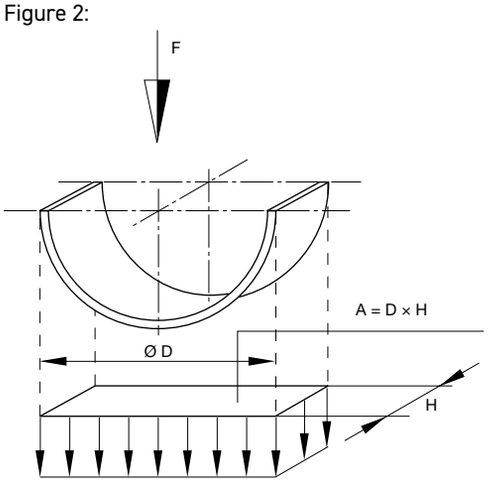

Tel: +45 63 12 83 00 | Email: ps@hymatik.com | www.hymatik.com | Hvidkaervej 27a, DK-5250 Odense SV, Denmark

Polon® Guiding tape (piston/rod) F3



The F3 guiding tape made of PTFE compounds is specifically intended for use in hydraulic cylinders. The length of the cut-to-size guiding tape results in a suitable gap that allows the system pressure to pass toward the seal, taking thermal expansions into account. The resulting gap is preferably created at a 45 ° angle in order to enable a minimum guidance function under load in the direction of the gap. Alternative gap versions (straight cut, stepped cut) are possible.
The PTFE compound should be selected depending on temperature and the permissible permanent deformation .

- Vibration absorption effect.
- Very good emergency running properties in low-lube conditions.
- High load capacity (compressive strength), low wear and reduced friction due to special bronze additive in PTFE material.
- Also available as bulk material.
- Any desired nominal diameter available due to use of machining technique.
- Suitable for cylinder repairs.
- Ideally suited for large-diameters.
- Installation in closed and undercut housings.

Range of Application

Operating temperature	-100 °C to +200 °C
Sliding speed	≤ 5 m/s

Compounds

Standard: Polon® 052, PTFE + 40 % bronze.
On request: Polon® 062, PTFE + 60 % bronze.
For cylinders made of alloys, light metal and high-grade steel, we recommend the use of compound Polon® 033 (PTFE + 25 % carbon).

Installation

The gap dimensions “e” guarantee an optimum service life of the guidance tapes. For the seals, however, the gaps “e” as mentioned on the respective catalogue pages are to be considered when it is essential to observe full operating conditions („Range of Application“) for the seals.

In case of special operating conditions (specific pressure loads, temperature, speed, use in water, HFA, HFB fluids etc.), please contact our consultancy service for a selection of the material and design best suiting your particular application requirements.

Tel: +45 63 12 83 00 | Email: ps@hymatik.com | www.hymatik.com | Hvidkaervej 27a, DK-5250 Odense SV, Denmark

Polon® Guiding tape (piston/rod) F3

Surfaces

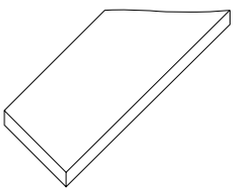

Guiding tape F3:
smooth (standard)

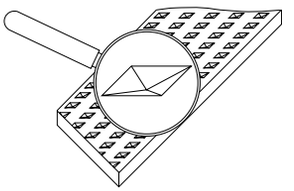

Guiding tape FW:
structured (on request)

A structured surface on a PTFE guiding tape is a design feature that improves lubrication, hence reducing friction, increasing wear resistance and lifetime.

Cut types

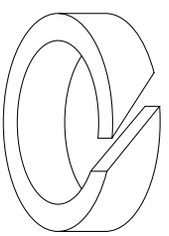

Type A
(angle-cut)

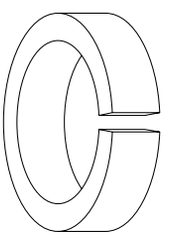

Type S
(straight-cut)

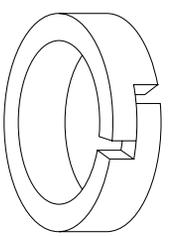

Type Z
(step-cut)

Types A and S are used for bearings where it is imperative that the system pressure is carried on to the seals. They are designed as „open bearings“ with a well defined gap.
Types A and Z provide added performance by ensuring bearing area overlap at the guiding tape's gap.
Type Z is a closed bearing, which in certain applications is used as a combined seal and bearing.
In certain applications, guiding tape with step-cut type Z may act as buffer seal, protecting the primary seal from pressure spikes.

Tel: +45 63 12 83 00 | Email: ps@hymatik.com | www.hymatik.com | Hvidkaervej 27a, DK-5250 Odense SV, Denmark

Polon® Guiding tape (piston/rod) F3

Calculation of the stretched length „U“

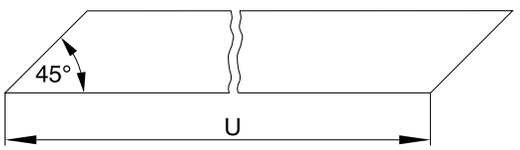

The length „U“ of the tape is to be calculated from the mean circumferential length less the clearance at the joint „k“. The k-values stated in the table are based on a temperature rise of 120 °C. (S = thickness of the guiding tape.)

Calculation of the stretched length „U“

Cylinder Ø D	Stretched length U (mm)			Gap
Rod ø d (mm)	Piston	Rod	Tolerance (mm)	k (mm)
≤ 45	U = pi × (D - S) - k	U = pi × (d + S) - k	± 0.25	1.8
> 45			± 0.4	3.5
> 80			± 0.6	4.4
> 100			± 0.8	5.6
> 125			± 1	6.6
> 150			± 1.2	8
> 180			± 1.4	9.5
> 215			± 1.6	12
> 270			± 1.8	15.5
> 330			± 2	19

Tel: +45 63 12 83 00 | Email: ps@hymatik.com | www.hymatik.com | Hvidkaervej 27a, DK-5250 Odense SV, Denmark

Polon® Guiding tape (piston/rod) F3

Selection of the guiding tape width L

Choose the appropriate curve for the applicable guide tolerances. Note that the more precise the guidance, the lower the value for the selected ε.

The following formula provides the minimum guidance width:

$$L \geq \frac{F}{Q\,(d - k \cdot \sqrt{2})}$$

d = inner groove diameter [mm]
k = gap [mm]
L = guiding tape width [mm]
$Q_{perm.}$ = permissible specific load [N/mm²]
F = radial load [N]

We recommend that the largest possible guidance width always be used even if the calculation yields a smaller value.

Permissible specific load $Q_{perm.}$ in relation to temperature T and the respective permanent set ε for the compound Polon® TE052:

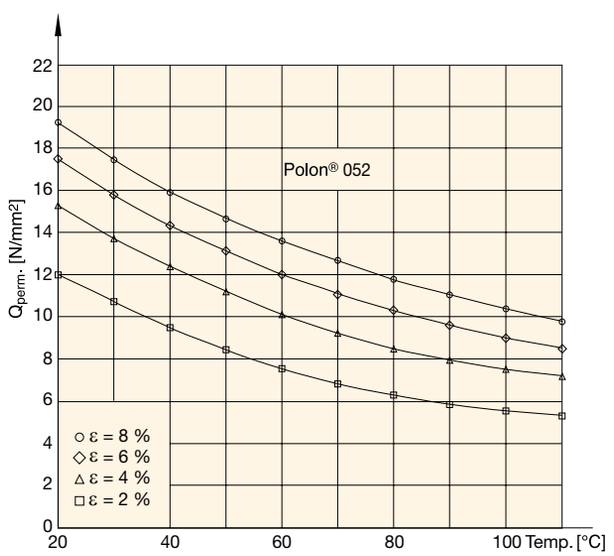

Permissible specific load $Q_{perm.}$ in relation to temperature T and the respective permanent set ε for the compound Polon® TE062:

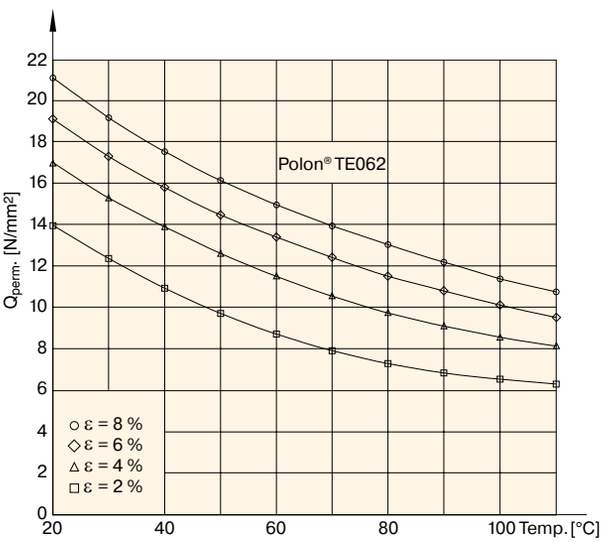

Permissible specific load $Q_{perm.}$ in relation to temperature T and the respective permanent set ε for the compound Polon® TE033:

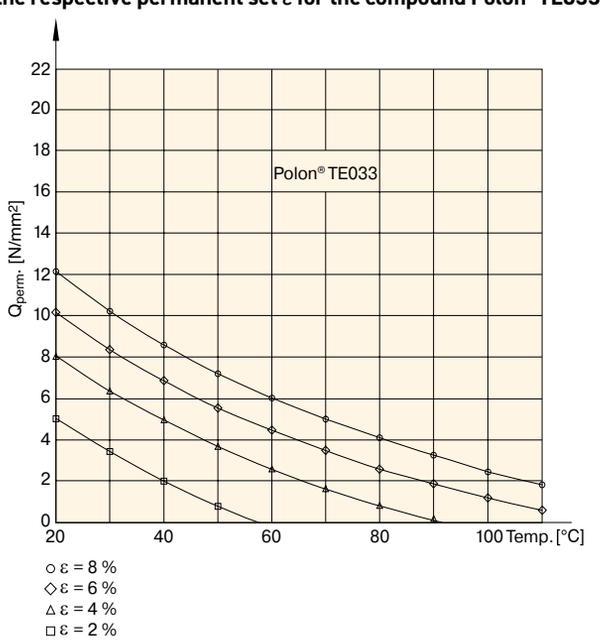

Tel: +45 63 12 83 00 | Email: ps@hymatik.com | www.hymatik.com | Hvidkaervej 27a, DK-5250 Odense SV, Denmark

Polon® Guiding tape (piston/rod) F3

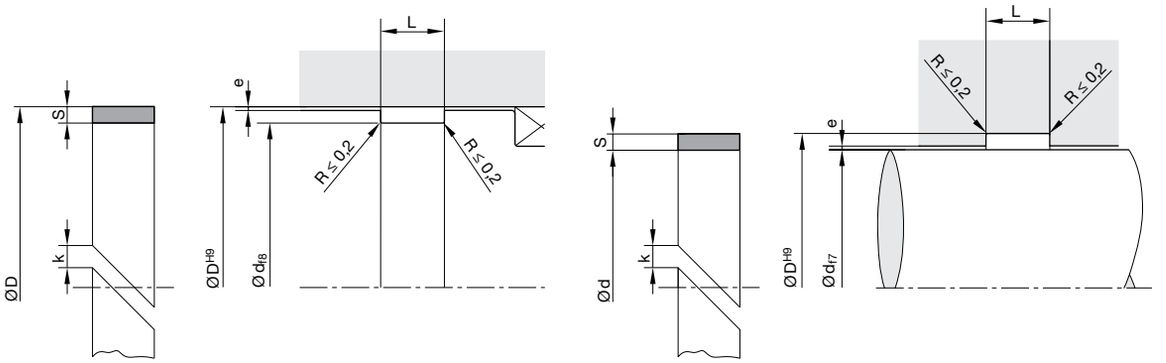

For surface finish, lead in chamfer and other installation dimensions see „General installation guidelines“.

Housing dimensions

Series no.	Recommended Ø range	Guiding tape		Groove		
	d/D (mm)	S, (mm),	L, (mm),	d (mm)	D (mm)	e (mm)
15063	≤ 50	$1.50^{+0.02}_{-0.03}$	$6.3^{+0.1}$	D - 3.0	d + 3.0	0.25
15081	≤ 50	$1.50^{+0.02}_{-0.03}$	$8.1^{+0.1}$	D - 3.0	d + 3.0	0.25
15100	≤ 50	$1.50^{+0.02}_{-0.03}$	$10.0^{+0.1}$	D - 3.0	d + 3.0	0.25
15150	≤ 50	$1.50^{+0.02}_{-0.03}$	$15.0^{+0.1}$	D - 3.0	d + 3.0	0.25
16025	≤ 50	$1.55^{+0.02}_{-0.03}$	$2.5^{+0.1}$	D - 3.1	d + 3.1	0.25
16040	≤ 51	$1.55^{+0.02}_{-0.03}$	$4.0^{+0.1}$	D - 3.1	d + 3.1	0.25
20063	≤ 50	$2.00_{-0.05}$	$6.3^{+0.1}$	D - 4.0	d + 4.0	0.30
20081	≤ 51	$2.00_{-0.05}$	$8.1^{+0.1}$	D - 4.0	d + 4.0	0.30
20097	> 50	$2.00_{-0.05}$	$9.7^{+0.1}$	D - 4.0	d + 4.0	0.30
20150	> 50	$2.00_{-0.05}$	$15.0^{+0.1}$	D - 4.0	d + 4.0	0.30
20200	> 50	$2.00_{-0.05}$	$20.0^{+0.1}$	D - 4.0	d + 4.0	0.30
25042	> 50	$2.50_{-0.05}$	$4.2^{+0.1}$	D - 5.0	d + 5.0	0.40
25056	> 50	$2.50_{-0.05}$	$5.6^{+0.1}$	D - 5.0	d + 5.0	0.40
25063	> 50	$2.50_{-0.05}$	$6.3^{+0.1}$	D - 5.0	d + 5.0	0.40
25081	> 50	$2.50_{-0.05}$	$8.1^{+0.1}$	D - 5.0	d + 5.0	0.40
25097	> 50	$2.50_{-0.05}$	$9.7^{+0.1}$	D - 5.0	d + 5.0	0.40
25150	> 50	$2.50_{-0.05}$	$15.0^{+0.2}$	D - 5.0	d + 5.0	0.40
25200	> 50	$2.50_{-0.05}$	$20.0^{+0.2}$	D - 5.0	d + 5.0	0.40
25250	> 50	$2.50_{-0.05}$	$25.0^{+0.2}$	D - 5.0	d + 5.0	0.40
25300	> 50	$2.50_{-0.05}$	$30.0^{+0.2}$	D - 5.0	d + 5.0	0.40

Tel: +45 63 12 83 00 | Email: ps@hymatik.com | www.hymatik.com | Hvidkaervej 27a, DK-5250 Odense SV, Denmark

Polon® Guiding tape (piston/rod) F3

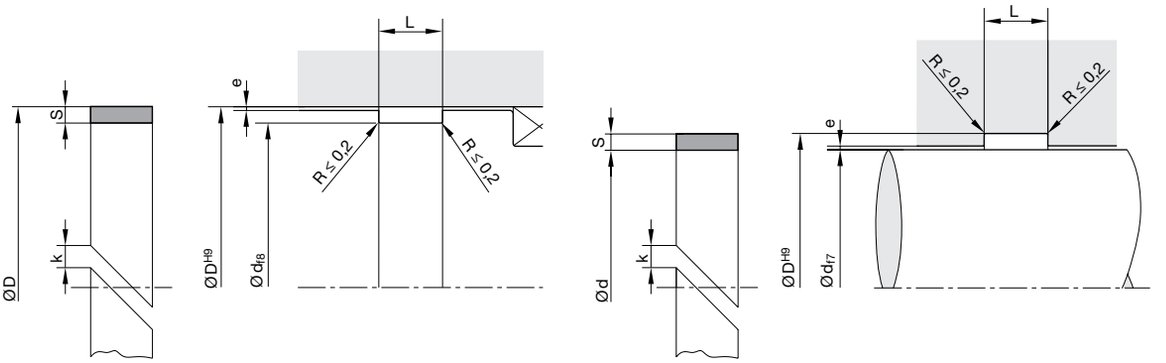

For surface finish, lead in chamfer and other installation dimensions see „General installation guidelines“.

Ordering example piston guidance

Mating surface	steel
Piston diameter	80 mm
Groove	9.7 × 2.5 mm
Guiding Tape Surface	smooth

a)by the metre	F3 0000 052 25097 A (9.7 × 2.5)
b)cut to length	F3 0800 052 25097 A (9.7 × 2.5 × 239)
F3	Profile
0800	Piston diameter × 10 (by the metre: 0000)
052	Compound
25097	Series no.
A	Type of cut

Ordering example rod guidance

Guiding Tape Surface	structured
Rod diameter	50 mm
Groove outer diameter	Rod diameter +2S
Groove	6.3 × 2.5 mm

FW 0550 052 25063 A (6.3 × 2.5 × 161.5)

Tel: +45 63 12 83 00 | Email: ps@hymatik.com | www.hymatik.com | Hvidkaervej 27a, DK-5250 Odense SV, Denmark

Guiding tape (piston/rod) FC



The FC guiding tape made of fabric phenolic resin laminate is intended for use in hydraulic cylinders. It is suitable as a piston and rod guide and can be cut to any desired length (max. 5.5 m).

When cutting the guiding tape to length (using a formula) it is created in a slit form (45 ° cut) to enable installation. In addition, the slit version ensures that the system pressure can pass toward the seal, taking thermal expansions into account.

The FC guiding tape is exceptionally pressure-resistant and wear-resistant. Pressure resistance is much higher than that of guiding elements made of other plastics.

The tape is wound in the form of flat coils on a core diameter of approx. 120 mm. Only complete rolls of tape stock are sold (5.5 m). Designed length to be cut by the customer.

- Minimal play due to extremely small manufacturing tolerances of the guiding elements.
- Vibration absorption effect.
- Extreme wear resistance.
- Improved sliding properties due to surface structure.
- Can be elongated or compressed within limited diameter ranges (preferably ≥ 100 mm).
- Significantly higher permissible loading pressure compared with other guidance tape materials.
- Any desired nominal diameter available due to use of machining technique.
- Suitable for cylinder repairs.
- Ideally suited for large-diameters.
- Bulk material.
- Installation in closed and undercut housings.

Range of Application

Guiding element for pistons and rods in hydraulic cylinders.

Operating temperature	
FC Q5030T	-40 °C to +120 °C
FC Q5038T	-50 °C to +130 °C
in HFA, HFB and HFC fluids	-30 °C to +80 °C
Pressure resistance acc. to EN ISO 604	
FC Q5030T	270 N/mm²
FC Q5038T	320 N/mm²
Sliding speed	≤ 0.5 m/s

Compounds

Duroplastic synthetic resins with fabric reinforcement.
Q5030T: phenole resin-polyester fabric laminate, colour: grey.
Q5038T: phenole resin-acrylic fabric laminate, colour: brown.

Installation

For piston and rod diameters up to 100 mm, we recommend our FR/FK guide rings.

For surface requirements, see chapter „General Installation Guidelines“.

The installed rings must have a gap „k“ between their diagonally cut ends:
k = 0.008 x d + 2
The calculated values for „k“ are rounded up to the nearest millimetre.

The calculation of the permissible radial force is based on the projected area D × H (cylinder) or d × H (rod).

Example: permissible radial force F_R for a cylinder diameter of D = 80 mm, length L = 15 mm, compound Q5038T and safety factor 4:

$$F_R = \frac{D \times L \times q}{v} = \frac{80 \times 15 \times 320}{4} = 96\,000\ N$$

Recommendation for determing the safety factor v: v > 3

Calculation of elongated length
“U“ (piston) = π × (D - S) - k

Calculation of elongated length
“U“ (rod) = π × (d + S) - k

In case of special operating conditions (specific pressure loads, temperature, speed, use in water, HFA, HFB fluids etc.), please contact our consultancy service for a selection of the material and design best suiting your particular application requirements.

Tel: +45 63 12 83 00 | Email: ps@hymatik.com | www.hymatik.com | Hvidkaervej 27a, DK-5250 Odense SV, Denmark

Guide ring (rod)

FR



The FR rod guide ring made of fabric phenolic resin laminate is intended for use in hydraulic cylinders. The guide ring is created in a slit form (45 ° cut) to enable installation. In addition, the slit version ensures that the system pressure can pass toward the seal, taking thermal expansions into account.

The FR guide ring is exceptionally pressure-resistant and wear-resistant.
Pressure resistance is much higher than that of guiding elements made of other plastics.

After installation, the FR guide ring has an interference fit against the bottom of the groove.

- Minimal play due to extremely small manufacturing tolerances of the guiding elements.
- Vibration absorption effect.
- Extreme wear resistance.
- Improved sliding properties due to surface structure.
- Significantly higher permissible loading pressure compared with other guidance tape materials.
- Dimensions according to DIN 10766.
- Any desired nominal diameter available due to use of machining technique.
- Installation in closed and undercut housings.

Range of Application

Guiding element for rods in hydraulic cylinders.

Operating temperature	
FR Q5029	-50 °C to +120 °C
FR Q5038	-50 °C to +130 °C
in HFA, HFB and HFC fluids	-30 °C to +80 °C
in water max.	+ 100 °C
Pressure resistance acc. to DIN 53454	
FR Q5029	270 N/mm²
FR Q5038	340 N/mm²
Water absorption acc. to DIN 53495	
FR Q5029	1 % to 2 %
FR Q5038	< 0.1 %
Sliding speed	≤ 0.5 m/s

Compounds

Duroplastic synthetic resins with fabric reinforcement.
Q5029: phenole resin-cotton laminate.
Q5038: phenole resin-acrylic fabric laminate.

Installation

For surface requirements, see chapter „General Installation Guidelines“.

For nonferrous and light metal pistons, please use our F3 guidance tape profile (PTFE with carbon filler).

The installed rings must have a gap „k“ between their diagonally cut ends:
k = 0.008 x d + 2
The calculated values for „k“ are rounded up to the nearest millimetre or half-millimetre.

The calculation of the permissible radial force is based on the projected area d × L.

Example: permissible radial force F_R for a rod diameter of d = 80 mm, length L = 15 mm, compound Q5038T and safety factor 4:

$$F_R = \frac{d \times L \times q}{v} = \frac{80 \times 15 \times 270}{4} = 81\,000\ N$$

Recommendation for determing the safety factor v: v > 3

Calculation of elongated length
“U“ (rod) = π × (d + S) - k

In case of special operating conditions (specific pressure loads, temperature, speed, use in water, HFA, HFB fluids etc.), please contact our consultancy service for a selection of the material and design best suiting your particular application requirements.

Tel: +45 63 12 83 00 | Email: ps@hymatik.com | www.hymatik.com | Hvidkaervej 27a, DK-5250 Odense SV, Denmark

Guide ring (rod)

FR

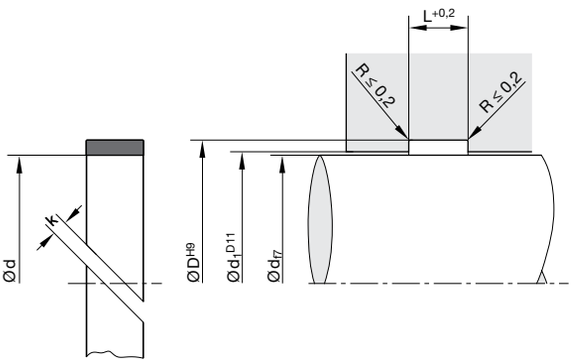

For surface finish, lead in chamfer and other installation dimensions see „General installation guidelines“.

Ordering example

Guide ring profile FR for a rod diameter of 63 mm.

Order code	FR 6370 Q5029 (63 × 68 × 9,7)
FR	Profile reference
6370	Dimension code
Q5029 or Q5038	Standard compound
d × D × L	Nominal dimensions

Tel: +45 63 12 83 00 | Email: ps@hymatik.com | www.hymatik.com | Hvidkaervej 27a, DK-5250 Odense SV, Denmark

Guide ring (rod)

FR

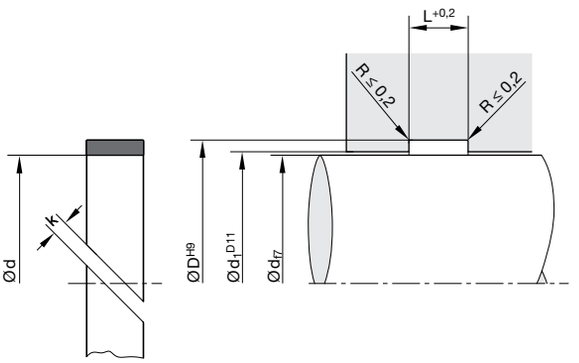

For surface finish, lead in chamfer and other installation dimensions see „General installation guidelines“.

d	D	L	d_1	Order code
12	15	3.6	12.2	FR 1215 Q5038
14	17	2.5	14.2	FR 1417 Q5038
18	21	2.5	18.2	FR 1823 Q5038
18	21	6	18.2	FR 1821 Q5038
20	25	4	20.2	FR 2025 Q5038
20	25	5.6	20.2	FR 2005 Q5038
20	25	9.7	20.2	FR 2007 Q5038
22	25	2.5	22.2	FR 2225 Q5038
22	25.1	4	22.2	FR 2224 Q5038
25	30	5.6	25.2	FR 2506 Q5038
25	30	9.7	25.2	FR 2507 Q5038
25.4	28.5	4	25.6	FR 2528 Q5029
27	32	5.6	27.2	FR 2702 Q5038
28	33	5.6	28.2	FR 2823 Q5038
28	33	9.7	28.2	FR 2833 Q5038
30	33	2.5	30.2	FR 3033 Q5038
30	35	4	30.2	FR 3002 Q5038
30	35	5.6	30.2	FR 3001 Q5038
30	35	9.7	30.2	FR 3003 Q5038
32	37	5.6	32.3	FR 3205 Q5038
32	37	9.7	32.3	FR 3209 Q5038
35	40	4	35.3	FR 3505 Q5029
35	40	5.6	35.3	FR 3506 Q5038
35	40	9.7	35.3	FR 3507 Q5038
36	41	5.6	36.3	FR 3618 Q5038
36	41	9.7	36.3	FR 3620 Q5038
37	42	5.6	37.3	FR 3742 Q5038
38	41	2.5	38.3	FR 3841 Q5038
40	45	5.6	40.4	FR 4004 Q5038
40	45	9.7	40.4	FR 4006 Q5038
40	45	15	40.4	FR 4010 Q5038
40	45.1	5.6	40.4	FR 4047 Q5038
45	48	2.5	45.4	FR 4548 Q5038
45	50	5.6	45.4	FR 4504 Q5038
45	50	6.3	45.4	FR 4506 Q5038
45	50	9.7	45.4	FR 4505 Q5038
45	50	15	45.4	FR 4508 Q5038
48	53	9.7	48.4	FR 4853 Q5029
50	55	5.6	50.4	FR 5015 Q5038
50	55	9.7	50.4	FR 5018 Q5038
50	55	20	50.4	FR 5019 Q5038
53	58	9.7	53.4	FR 5309 Q5038
55	58	4	55.4	FR 5558 Q5038
55	60	9.7	55.4	FR 5507 Q5038
58	63	5.6	58.4	FR 5808 Q5038
58	63	9.7	58.4	FR 5805 Q5038
60	65	9.7	60.5	FR 6005 Q5038
60	65	15	60.5	FR 6010 Q5038
63	68	5.6	63.5	FR 6305 Q5029
63	68	9.7	63.5	FR 6370 Q5038
63	68	15	63.5	FR 6315 Q5038
65	70	5.6	65.5	FR 6501 Q5029
65	70	9.7	65.5	FR 6503 Q5038
65	70	15	65.5	FR 6506 Q5038
70	75	6.3	70.5	FR 7000 Q5038
70	75	9.7	70.5	FR 7005 Q5038
70	75	15	70.5	FR 7004 Q5038
75	80	9.7	75.5	FR 7506 Q5038
75	80	15	75.5	FR 7505 Q5038
80	85	9.7	80.5	FR 8010 Q5038
80	85	15	80.5	FR 8012 Q5038
80	85	25	80.5	FR 8014 Q5029
85	90	9.7	85.5	FR 8509 Q5038
85	90	15	85.5	FR 8515 Q5038
85	90	25	85.5	FR 8525 Q5038
90	95	9.7	90.5	FR 9094 Q5038
90	95	15	90.5	FR 9095 Q5038
90	95	25	90.5	FR 9025 Q5038

Further sizes on request.

Tel: +45 63 12 83 00 | Email: ps@hymatik.com | www.hymatik.com | Hvidkaervej 27a, DK-5250 Odense SV, Denmark

Guide ring (rod)

FR

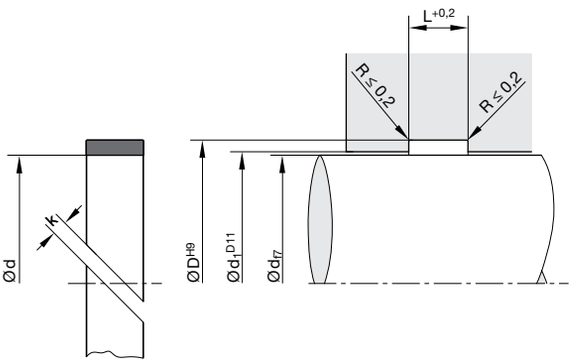

For surface finish, lead in chamfer and other installation dimensions see „General installation guidelines“.

d	D	L	d_1	Order code
95	100	9.7	95.6	FR 9510 Q5038
95	100	15	95.6	FR 9511 Q5038
100	105	5.6	100.6	FR A003 Q5038
100	105	9.7	100.6	FR A004 Q5038
100	105	15	100.6	FR A005 Q5038
100	105	25	100.6	FR A025 Q5038
105	110	15	105.6	FR A511 Q5038
105	110	25	105.6	FR A510 Q5029
110	115	9.7	110.6	FR B008 Q5038
110	115	15	110.6	FR B009 Q5038
110	115	25	110.6	FR B011 Q5038
120	125	9.7	120.6	FR C051 Q5038
120	125	15	120.6	FR C052 Q5038
120	125	25	120.6	FR C026 Q5038
125	130	15	125.6	FR C055 Q5038
125	130	25	125.6	FR C030 Q5038
130	135	15	130.6	FR D005 Q5038
135	140	15	135.6	FR D051 Q5038
140	145	9.7	140.7	FR E031 Q5029
140	145	15	140.7	FR E038 Q5038
140	145	25	140.7	FR E032 Q5038
145	150	9.7	145.7	FR E047 Q5029
145	150	15	145.7	FR E050 Q5029
150	155	9.7	150.7	FR F009 Q5038
155	160	9.7	155.7	FR F051 Q5038
155	160	15	155.7	FR F052 Q5038
160	165	9.7	160.7	FR G008 Q5038
160	165	25	160.7	FR G025 Q5038
165	170	9.7	165.7	FR G565 Q5029
170	175	15	170.7	FR H015 Q5038
170	175	25	170.7	FR H025 Q5038
175	180	9.7	175.7	FR H050 Q5029
175	180	15	175.7	FR H051 Q5029
175	180	25	175.7	FR H053 Q5029

d	D	L	d_1	Order code
180	185	15	180.7	FR J019 Q5038
180	185	25	180.7	FR J020 Q5038
186	190	15	186.7	FR J060 Q5038
190	195	15	190.7	FR K012 Q5038
195	200	15	195.7	FR K052 Q5038
195	200	25	195.7	FR K051 Q5038
200	205	15	200.7	FR L004 Q5038
200	205	25	200.7	FR L025 Q5038
202	210	25	205.7	FR L050 Q5038
205	210	25	205.7	FR L065 Q5038
205	210	25	205.7	FR L075 Q5038
210	215	25	210.7	FR L509 Q5038
215	220	15	215.7	FR L520 Q5038
215	220	20	215.7	FR L524 Q5029
215	220	25	215.7	FR L525 Q5038
220	225	9.7	220.7	FR M004 Q5038
220	225	15	220.7	FR M005 Q5038
222	227	15	222.7	FR M070 Q5038
230	235	25	230.7	FR M525 Q5038
235	240	9.7	235.7	FR M554 Q5038
235	240	25	235.7	FR M560 Q5038
235	250	25	235.7	FR M600 Q5038
245	250	15	245.7	FR N042 Q5038
245	250	25	245.7	FR N045 Q5038
250	255	15	250.7	FR N520 Q5038
250	255	25	250.7	FR N525 Q5038
260	265	15	260.7	FR O008 Q5038
260	265	25	260.7	FR O010 Q5029
260	266	30	260.7	FR O011 Q5038
265	270	15	265.7	FR O515 Q5038
265	270	25	265.7	FR O520 Q5038
270	275	25	270.7	FR O706 Q5038
275	280	15	275.8	FR O715 Q5029
275	280	20	275.8	FR O720 Q5038

Further sizes on request.

Tel: +45 63 12 83 00 | Email: ps@hymatik.com | www.hymatik.com | Hvidkaervej 27a, DK-5250 Odense SV, Denmark

Guide ring (rod)

FR

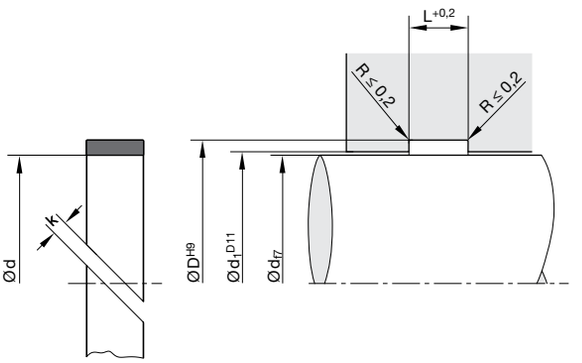

For surface finish, lead in chamfer and other installation dimensions see „General installation guidelines“.

d	D	L	d_1	Order code
275	280	25	275.8	FR O725 Q5038
280	270	23	280.8	FR P023 Q5038
280	285	15	280.8	FR P015 Q5038
280	290	25	280.8	FR P025 Q5038
295	300	15	295.8	FR P551 Q5029
300	305	25	301	FR Q005 Q5038
305	310	15	306	FR Q002 Q5038
310	315	25	311	FR Q010 Q5029
314	320	30	315	FR Q011 Q5038
315	320	15	316	FR Q014 Q5029
315	320	25	316	FR Q015 Q5029
320	325	15	321	FR Q215 Q5038
320	325	25	321	FR Q217 Q5038
325	330	20	326	FR Q230 Q5038
325	330	25	326	FR Q233 Q5038
335	340	15	336	FR Q334 Q5038
355	360	20	356	FR Q552 Q5029

Further sizes on request.

Tel: +45 63 12 83 00 | Email: ps@hymatik.com | www.hymatik.com | Hvidkaervej 27a, DK-5250 Odense SV, Denmark

Guide ring (piston)

FK



The FK guide ring made of fabric phenolic resin laminate is intended for use in hydraulic cylinders. The guide ring is created in a slit form (45° cut) to enable installation. In addition, the slit version ensures that the system pressure can pass toward the seal, taking thermal expansions into account.

The FK guide ring is exceptionally pressure-resistant and wear-resistant. Pressure resistance is much higher than that of guiding elements made of other plastics.

After installation, the FK guide ring has an interference fit against the bottom of the groove.

- Minimal play due to extremely small manufacturing tolerances of the guiding elements.
- Vibration absorption effect.
- Extreme wear resistance.
- Improved sliding properties due to surface structure.
- Easy snap assembly on a single-part piston.
- Significantly higher permissible loading pressure compared with other guidance tape materials.
- Dimensions according to DIN 10766.
- Also available as bulk material.
- Any desired nominal diameter available due to use of machining technique.
- Installation in closed and undercut housings.

Range of Application

Guiding element for pistons and piston rods in hydraulic cylinders.

Operating temperature	
FKS525Q5038	-50 °C to +130 °C
FK Q5029	-50 °C to +120 °C
in HFA, HFB and HFC fluids	-30 °C to +80 °C
in water max.	+ 100 °C
Pressure resistance acc. to DIN 53454	
FKS525Q5038	340 N/mm²
FK Q5029	270 N/mm²
Water absorption acc. to DIN 53495	
FKS525Q5038	< 0.1 %
FK Q5029	1 % to 2 %
Sliding speed	≤ 0.5 m/s

Compounds

Duroplastic synthetic resins with fabric reinforcement.
Q5029: phenole resin-cotton laminate.
Q5038: phenole resin-acrylic fabric laminate.

Installation

For surface requirements, see chapter „General Installation Guidelines“.

For nonferrous and light metal pistons, please use our F3 guidance tape profile (PTFE with carbon filler).

The installed rings must have a gap „k“ between their diagonally cut ends:
k = 0.008 x d + 2
The calculated values for „k“ are rounded up to the nearest millimetre or half-millimetre.

The calculation of the permissible radial force is based on the projected area D × L.

Example: permissible radial force F_R for a cylinder diameter of D = 80 mm, length L = 15 mm, compound Q5038T and safety factor 4:

$$F_R = \frac{D \times L \times q}{v} = \frac{80 \times 15 \times 270}{4} = 81\,000\ N$$

Recommendation for determing the safety factor v: v > 3

Calculation of elongated length
“U“ (piston) = π × (D - S) - k

In case of special operating conditions (specific pressure loads, temperature, speed, use in water, HFA, HFB fluids etc.), please contact our consultancy service for a selection of the material and design best suiting your particular application requirements.

Tel: +45 63 12 83 00 | Email: ps@hymatik.com | www.hymatik.com | Hvidkaervej 27a, DK-5250 Odense SV, Denmark

Guide ring (piston) FK

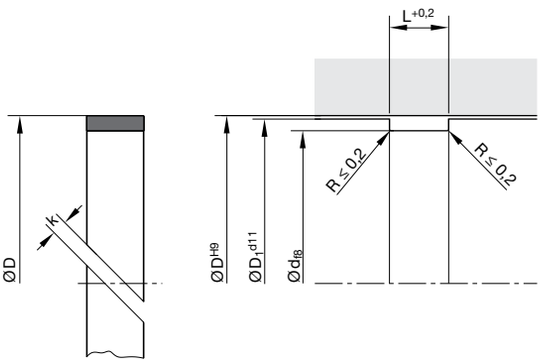

For surface finish, lead in chamfer and other installation dimensions see „General installation guidelines“.

Ordering example

Guide ring profile FK for a piston diameter of 100 mm.

Order code	FK A095 Q5029 (100 × 95 × 9.7)
FK	Profile reference
A095	Dimension code
Q5029 or Q5038	Standard compound
D × d × L	Nominal dimensions

Tel: +45 63 12 83 00 | Email: ps@hymatik.com | www.hymatik.com | Hvidkaervej 27a, DK-5250 Odense SV, Denmark

Guide ring (piston)

FK

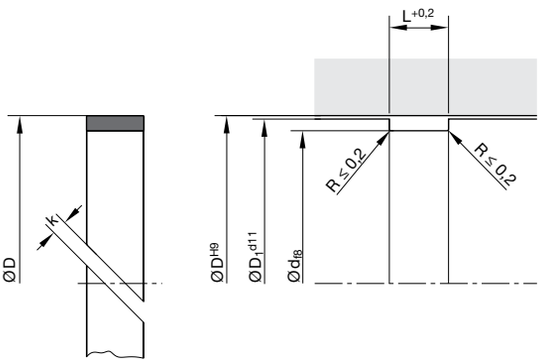

For surface finish, lead in chamfer and other installation dimensions see „General installation guidelines“.

D	d	L	D_1	Order code
25	20	5.6	24.8	FK 2520 Q5038
25	20	9.7	24.8	FK 2597 Q5038
28	23	6.3	27.8	FK 2923 Q5029
32	27	5.6	31.8	FK 3227 Q5038
32	27	9.7	31.8	FK 3228 Q5038
35	30	5.6	34.8	FK 3530 Q5038
35	30	9.7	34.8	FK 3597 Q5038
36	31	5.6	35.8	FK 3631 Q5038
40	35	5.6	39.7	FK 4035 Q5038
40	35	9.7	39.7	FK 4097 Q5038
42	37	5.6	41.7	FK 4237 Q5038
45	40	5.6	44.6	FK 4540 Q5029
45	40	9.7	44.6	FK 4597 Q5038
50	45	5.6	49.6	FK 5043 Q5038
50	45	9.7	49.6	FK 5045 Q5029
55	50	5.6	54.6	FK 5550 Q5029
55	50	9.7	54.6	FK 5597 Q5038
60	55	5.6	59.6	FK 6055 Q5038
60	55	9.7	59.6	FK 6097 Q5038
63	58	5.6	62.6	FK 5356 Q5038
63	58	6.3	62.6	FK 6359 Q5038
63	58	9.7	62.6	FK 6397 Q5038
65	60	5.6	64.5	FK 6561 Q5038
65	60	6.3	64.5	FK 6560 Q5038
65	60	9.7	64.5	FK 6597 Q5038
70	65	5.6	69.5	FK 7030 Q5038
70	65	6.3	69.5	FK 7065 Q5029
70	65	9.7	69.5	FK 7097 Q5038
70	65	15	69.5	FK 7015 Q5038
75	70	5.6	74.5	FK 7569 Q5038
75	70	9.7	74.5	FK 7570 Q5029
75	70	15	74.5	FK 7515 Q5038
80	75	6.3	79.5	FK 8075 Q5029
80	75	9.7	79.5	FK 8076 Q5038

D	d	L	D_1	Order code
80	75	15	79.5	FK 8015 Q5038
80	75	25	79.5	FK 8077 Q5038
85	80	6.3	84.5	FK 8580 Q5029
85	80	9.7	84.5	FK 8581 Q5038
85	80	15	84.5	FK 8515 Q5038
90	85	5.6	89.5	FK 9084 Q5038
90	85	9.7	89.5	FK 9086 Q5038
90	85	15	89.5	FK 9015 Q5038
90	85	25	89.5	FK 9085 Q5038
95	90	5.6	94.5	FK 9591 Q5038
95	90	9.7	94.5	FK 9590 Q5038
95	90	15	94.5	FK 9515 Q5038
100	95	5.6	99.4	FK A094 Q5038
100	95	9.7	99.4	FK A095 Q5038
100	95	15	99.4	FK 9513 Q5038
105	100	9.7	104.4	FK A500 Q5038
105	100	15	104.4	FK A515 Q038
110	105	9.7	109.4	FK B005 Q5038
110	105	15	109.4	FK B015 Q5038
115	110	9.7	114.4	FK B510 Q5038
115	110	15	114.4	FK B110 Q5029
120	115	9.7	119.4	FK C115 Q5029
120	115	15	119.4	FK C120 Q5038
125	120	9.7	124.4	FK C520 Q5038
125	120	15	124.4	FK C525 Q5038
130	125	9.7	129.4	FK D026 Q5038
130	125	15	129.4	FK D045 Q5038
140	135	9.7	139.4	FK E035 Q5038
140	135	15	139.4	FK E015 Q5038
145	140	9.7	144.3	FK E540 Q5038
145	140	15	144.3	FK E550 Q5038
150	145	9.7	149.3	FK F045 Q5038
150	145	15	149.3	FK F050 Q5038
155	150	9.7	154.3	FK F550 Q5038

Further sizes on request.

Tel: +45 63 12 83 00 | Email: ps@hymatik.com | www.hymatik.com | Hvidkaervej 27a, DK-5250 Odense SV, Denmark

Guide ring (piston)

FK

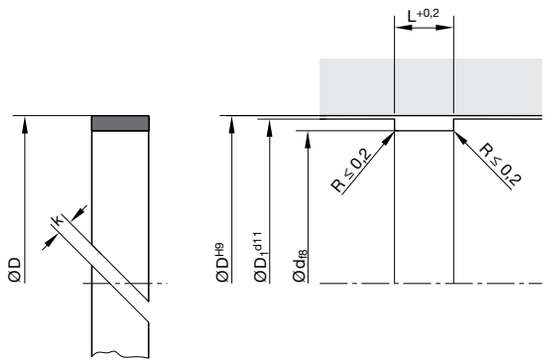

For surface finish, lead in chamfer and other installation dimensions see „General installation guidelines“.

D	d	L	D_1	Order code
155	150	15	154.3	FK F551 Q5038
155	150	25	154.3	FK F525 Q5038
160	155	9.7	159.3	FK G055 Q5038
160	155	15	159.3	FK G056 Q5029
160	155	20	159.3	FK G025 Q5038
165	160	9.7	164.3	FK G560 Q5038
165	160	15	164.3	FK G561 Q5038
165	160	25	164.3	FK G525 Q5038
170	165	9.7	169.3	FK H065 Q5038
170	165	15	169.3	FK H066 Q5038
170	165	25	169.3	FK H075 Q5038
175	170	9.7	174.3	FK H570 Q5038
175	170	15	174.3	FK H571 Q5038
175	170	25	174.3	FK H525 Q5038
180	175	9.7	179.3	FK J075 Q5038
180	175	15	179.3	FK J175 Q5038
180	175	25	179.3	FK J025 Q5038
190	185	9.7	189.3	FK K165 Q5038
190	185	15	189.3	FK K175 Q5038
190	185	25	189.3	FK K185 Q5038
200	195	9.7	199.3	FK L095 Q5038
200	195	15	199.3	FK L096 Q5029
200	195	25	199.3	FK L195 Q5038
205	200	15	204.3	FK L500 Q5038
205	200	25	204.3	FK L525 Q5038
210	205	15	209.3	FK L005 Q5038
210	205	25	209.3	FK L026 Q5038
215	210	15	214.3	FK L520 Q5038
215	210	25	214.3	FK L526 Q5038
220	215	15	219.3	FK M015 Q5038
220	215	25	219.3	FK M016 Q5038
225	220	15	224.3	FK M520 Q5038
225	220	25	224.3	FK M525 Q5038
230	225	15	229.3	FK M025 Q5038
230	225	25	229.3	FK M225 Q5038
240	235	15	239.3	FK N036 Q5038
240	235	25	239.3	FK N050 Q5038
250	245	15	249.3	FK N046 Q5038
250	245	25	249.3	FK N245 Q5038
255	250	15	254.3	FK N550 Q5038
255	250	25	254.3	FK N525 Q5038
260	255	15	259.3	FK O015 Q5038
260	255	25	259.3	FK O025 Q5038
265	260	15	264.3	FK O660 Q5038
265	260	25	264.3	FK O625 Q5038
270	265	15	269.3	FK O065 Q5038
270	265	25	269.3	FK O075 Q5038
275	270	15	274.3	FK O515 Q5038
275	270	25	274.3	FK O525 Q5038
280	275	15	279.2	FK P076 Q5038
280	275	25	279.2	FK P025 Q5038
285	280	15	284.2	FK P580 Q5038
285	280	25	284.2	FK P525 Q5038
290	285	15	289.2	FK P085 Q5038
290	285	25	289.2	FK P095 Q5038
300	295	15	299.2	FK Q001 Q5038
300	295	25	299.2	FK Q000 Q5038
310	305	15	309	FK Q010 Q5038
310	305	25	309	FK Q025 Q5038
320	315	15	319	FK Q020 Q5038
320	315	25	319	FK Q021 Q5038
330	325	15	329	FK Q015 Q5038
330	325	25	329	FK Q030 Q5038
350	345	15	349	FK Q315 Q5038
350	345	25	349	FK Q346 Q5038
380	375	15	379	FK Q070 Q5038
380	375	25	379	FK Q080 Q5038
400	395	15	399	FK R015 Q5038

Further sizes on request.

Tel: +45 63 12 83 00 | Email: ps@hymatik.com | www.hymatik.com | Hvidkaervej 27a, DK-5250 Odense SV, Denmark

Guide ring (piston)

FK

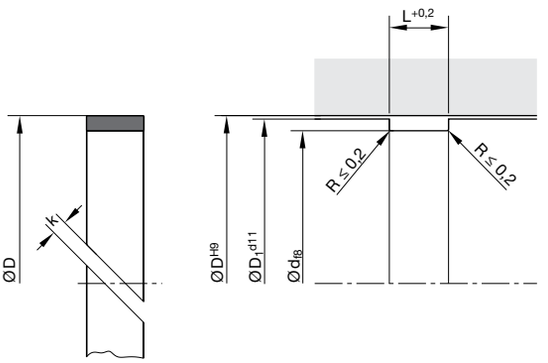

For surface finish, lead in chamfer and other installation dimensions see „General installation guidelines“.

D	d	L	D_1	Order code
400	395	25	399	FK R025 Q5038
450	445	25	449	FK R445 Q5038
450	445	25	449	FK R450 Q5038
500	495	15	499	FK S500 Q5038
500	495	25	499	FK S525 Q5038

Further sizes on request.

Tel: +45 63 12 83 00 | Email: ps@hymatik.com | www.hymatik.com | Hvidkaervej 27a, DK-5250 Odense SV, Denmark

Tel: +45 63 12 83 00 | Email: ps@hymatik.com | www.hymatik.com | Hvidkaervej 27a, DK-5250 Odense SV, Denmark

Rod seals

Profile cross-section	Profile reference	Pressure max. (bar)	Page
Rod seals			
	C1	160	72
	GS	200	76
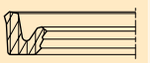	HL	250	78
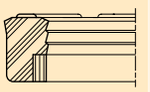	R3	315	80
	B3	400	82
	BS	400	86
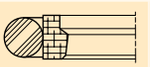	OD	400	89
	BD	500	95
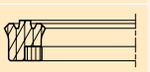	BU	500	97

Tel: +45 63 12 83 00 | Email: ps@hymatik.com | www.hymatik.com | Hvidkaervej 27a, DK-5250 Odense SV, Denmark

Rod seal

C1



The C1 rod seal is a U-ring with interference fit on the outer diameter. Excellent sealing performance is achieved with minimal profile width and height. Extremely low friction due to short seal contact area. Use in pneumatic equipment is only possible with constant lubricant supply, e.g. oiled air. For non-oiled (dry air) pneumatic systems, we recommend our E5 product series.

- Good wear resistance.
- Easy installation.
- High temperature resistance in case of suitable compound selection.
- Excellent media resistance in case of suitable compound selection.
- Suitable compounds available for special requirements of the chemical process industry.
- Suitable compounds available for special requirements of the food processing industry.
- Installation in closed and undercut housings.

Range of Application

The C1 rod seal is particularly suitable for plungers, piston rods, stems and valve lifters as well as for slowly operating pneumatic rotors (v ≤ 0.2 m/s).

Operating pressure	≤ 160 bar [1)]
Hydraulics	≤ 160 bar
Pneumatics	≤ 16 bar
Rotary transmissions	≤ 20 bar
Operating temperature	
Hydraulics	-35 °C to +100 °C
Pneumatics	-35 °C to +80 °C
Sliding speed	
Hydraulics	≤ 0.5 m/s
Pneumatics	≤ 1 m/s
Rotary transmissions	≤ 0.2 m/s

Recommendation for rotary transmissions: P × v ≤ 3
(Definition see catalogue „Hydraulic Seals“, chapter „Rotary Seals“, introduction).

[1)] Dependent upon cross-section and compound.

Compounds

Standard: N3571, NBR compound (≈ 70 Shore A).
For low temperatures: N8602, NBR compound (≈ 70 Shore A).
For high temperatures: V3664, FKM compound (≈ 85 Shore A).

Installation

The profile C1 rod seals are manufactured over-sized on the external diameters in relation to the nominal dimensions. This ensures the required tight fit. Only after installation the sealing lip diameter will show the desired dimensions. Profile C1 can easily be snapped into the grooves.
When choosing a seal for a particular diameter, it is best to select the one with the largest possible cross-section.

Note: For nominal diameters ≤ 25 mm an open housing is recommended, according to the seals cross-section and the position of the groove (stuffing box installation).

In case of special operating conditions (specific pressure loads, temperature, speed, use in water, HFA, HFB fluids etc.), please contact our consultancy service for a selection of the material and design best suiting your particular application requirements.

Tel: +45 63 12 83 00 | Email: ps@hymatik.com | www.hymatik.com | Hvidkaervej 27a, DK-5250 Odense SV, Denmark

Rod seal

C1

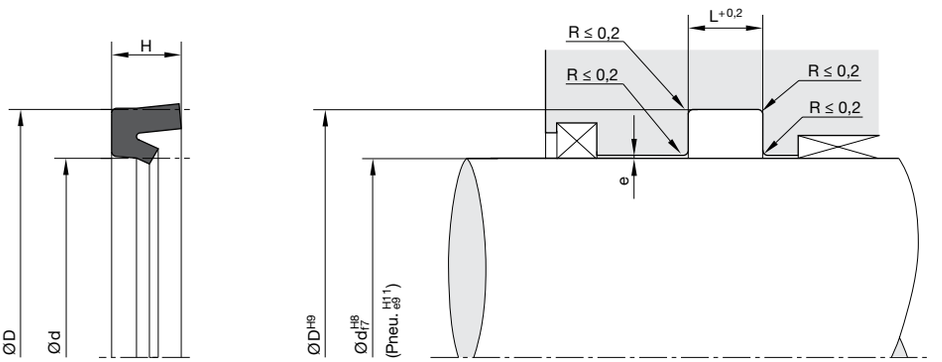

„e“ see chapter „Maximum gap allowance“.

For surface finish, lead in chamfer and other installation dimensions see „General installation guidelines“.

d	D	H	L	Order code
2	7	3.5	4	C1 0003 N3571
3	7	3	3.5	C1 0005 N3571
3	9	4.5	5	C1 0009 N3571
3	10	5	5.5	C1 0011 N3571
4	8	3	3.5	C1 0013 N3571
4	9	3.5	4	C1 0016 N3571
4	10	4.2	4.7	C1 0019 N3571
4	12	4.5	5	C1 0022 N3571
4	12	5.5	6	C1 0024 N3571
4.5	8	3	3.5	C1 0032 N3571
5	9	2.5	3	C1 0035 N3571
5	10	4	4.5	C1 0038 N3571
5	12	4.5	5	C1 0041 N3571
6	10	3	3.5	C1 0055 N3571
6	12	4.2	4.7	C1 0058 N3571
6	13	5	5.5	C1 0059 N3571
6	15	7	7.5	C1 0062 N3571
6	16	5	5.5	C1 0065 N3571
7	13	4	4.5	C1 0070 N3571
8	14	4	4.5	C1 0074 N3571
8	14.5	4.5	5	C1 0077 N3571
8	16	5.5	6	C1 0080 N3571
8	18	8	8.5	C1 0083 N3571
9	14	3.5	4	C1 0087 N3571
9.3	14	3	3.5	C1 0090 N3571
9.5	18.5	7	7.5	C1 0094 N3571
10	13.6	2.3	2.7	C1 1002 N3571
10	15	3.5	4	C1 1005 N3571
10	16	4.5	5	C1 1008 N3571
10	16	6	6.5	C1 1011 N3571
10	18	5.5	6	C1 1015 N3571
10	20	7	7.5	C1 1018 N3571
11	17	4	4.5	C1 1022 N3571
11	18	4.5	5	C1 1025 N3571

d	D	H	L	Order code
12	18.5	4.5	5	C1 1028 N3571
12	19	4.5	5	C1 1030 N3571
12	20	5.5	6	C1 1033 N3571
13	17.5	2.8	3.3	C1 1036 N3571
13.8	22	5.5	6	C1 1037 N3571
14	19	3.5	4	C1 1039 N3571
14	20	4.8	5.3	C1 1040 N3571
14	22	5.5	6	C1 1041 N3571
14	25	8	8.5	C1 1042 N3571
15	22	5	5.5	C1 1044 N3571
16	22.5	4.5	5	C1 1049 N3571
16	23	5.5	6	C1 1051 N3571
16	24	5.5	6	C1 1053 N3571
16	26	7	7.5	C1 1056 N3571
17	25	5.5	6	C1 1060 N3571
18	25	4.5	5	C1 1062 N3571
18	25	5.5	6	C1 1063 N3571
18	26	5.5	6	C1 1066 N3571
18.5	25.5	5.5	6	C1 1074 N3571
20	26	4	4.5	C1 2003 N3571
20	26	4.8	5.3	C1 2005 N3571
20	28	5.5	6	C1 2009 N3571
20	28	8	8.5	C1 2013 N3571
20	30	7	7.5	C1 2020 N3571
20	32	7	7.5	C1 2022 N3571
22	29	5.5	6	C1 2025 N3571
22	30	5.5	6	C1 2029 N3571
23	31	5.5	6	C1 2038 N3571
24	32	5.5	6	C1 2043 N3571
25	32	5.5	6	C1 2053 N3571
25	33	5.5	6	C1 2058 N3571
25	33	8	8.5	C1 2061 N3571
25	35	6	6.5	C1 2064 N3571
25	35	7	7.5	C1 2065 N3571

Further sizes on request.

Tel: +45 63 12 83 00 | Email: ps@hymatik.com | www.hymatik.com | Hvidkaervej 27a, DK-5250 Odense SV, Denmark

Rod seal

C1

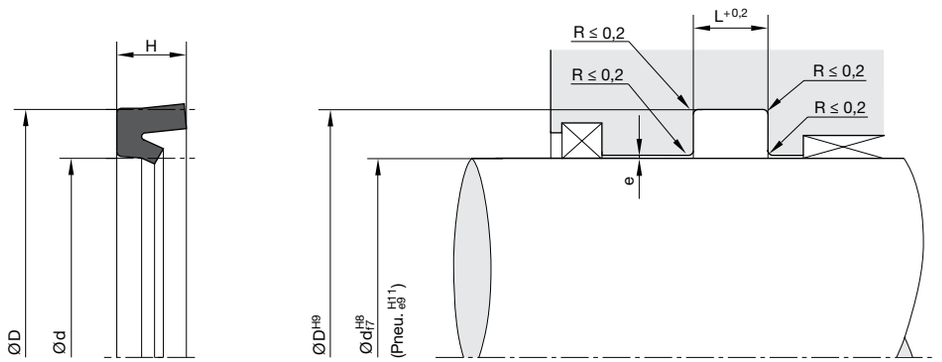

„e“ see chapter „Maximum gap allowance“.

For surface finish, lead in chamfer and other installation dimensions see „General installation guidelines“.

d	D	H	L	Order code
25	37	8.5	9.5	C1 2069 N3571
25	40	10	11	C1 2075 N3571
26	36	7	7.5	C1 2078 N3571
28	36	5.5	6	C1 2085 N3571
28	38	7	7.5	C1 2089 N3571
30	38	5.5	6	C1 3005 N3571
30	38	8	8.5	C1 3010 N3571
30	40	7	7.5	C1 3015 N3571
30	42	8	8.5	C1 3019 N3571
30	42	8.5	9.5	C1 3020 N3571
32	40	5.5	6	C1 3025 N3571
32	42	7	7.5	C1 3030 N3571
33	43	7	7.5	C1 3035 N3571
34	44	7	7.5	C1 3040 N3571
35	43	8	8.5	C1 3045 N3571
35	45	7	7.5	C1 3050 N3571
36	46	7	7.5	C1 3055 N3571
36	50	10	11	C1 3057 N3571
38	48	7	7.5	C1 3060 N3571
40	48	8	8.5	C1 4010 N3571
40	50	7	7.5	C1 4015 N3571
40	52	8.5	9.5	C1 4020 N3571
42	52	7	7.5	C1 4025 N3571
44	54	7	7.5	C1 4030 N3571
45	55	7	7.5	C1 4035 N3571
46	56	7	7.5	C1 4046 N3571
47	57	7	7.5	C1 4055 N3571
48	58	7	7.5	C1 4060 N3571
50	58	8	8.5	C1 5005 N3571
50	60	7	7.5	C1 5010 N3571
50	63	8.5	9.5	C1 5015 N3571
50	66	11	12	C1 5020 N3571
54	64	7	7.5	C1 5035 N3571
55	65	7	7.5	C1 5040 N3571

d	D	H	L	Order code
56	66	7	7.5	C1 5043 N3571
58	68	7	7.5	C1 5058 N3571
60	72	8.5	9.5	C1 6005 N3571
63	73	7	7.5	C1 6025 N3571
63	75	8.5	9.5	C1 6035 N3571
63	78	8.5	9.5	C1 6036 N3584
64	76	7.5	8	C1 6040 N3571
65	77	8.5	9.5	C1 6055 N3571
68	80	8.5	9.5	C1 6070 N3571
70	82	8.5	9.5	C1 7003 N3571
75	87	8.5	9.5	C1 7020 N3571
80	90	7	7.5	C1 8010 N3571
80	92	8.5	9.5	C1 8015 N3571
80	100	14	15	C1 8025 N3571
85	97	8.5	9.5	C1 8040 N3571
85	100	10	11	C1 8045 N3571
90	102	8.5	9.5	C1 9015 N3571
95	107	8.5	9.5	C1 9035 N3571
100	110	7	7.5	C1 A010 N3571
100	115	10	11	C1 A015 N3571
105	120	10	11	C1 A051 N3571
105	125	12	13	C1 A055 N3571
110	125	10	11	C1 B015 N3571
110	130	14	15	C1 B020 N3571
120	135	10	11	C1 C015 N3571
120	140	14	15	C1 C020 N3571
125	140	10	11	C1 C035 N3571
125	145	12	13	C1 C037 N3571
130	145	10	11	C1 D015 N3571
135	150	10	11	C1 D035 N3571
140	160	14	15	C1 E015 N3571
145	165	13	14	C1 E050 N3571
150	170	14	15	C1 F020 N3571
155	170	10	11	C1 F053 N3571

Further sizes on request.

Tel: +45 63 12 83 00 | Email: ps@hymatik.com | www.hymatik.com | Hvidkaervej 27a, DK-5250 Odense SV, Denmark

Rod seal

C1

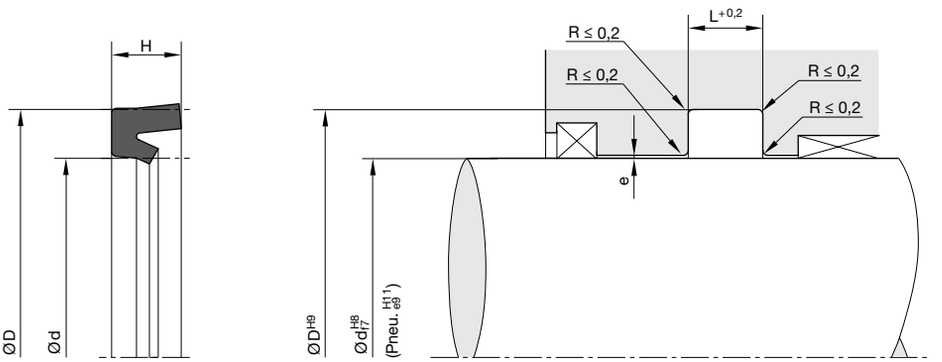

„e“ see chapter „Maximum gap allowance“.

For surface finish, lead in chamfer and other installation dimensions see „General installation guidelines“.

d	D	H	L	Order code
160	180	14	15	C1 G015 N3571
170	190	14	15	C1 H007 N3571
170	194	15	16	C1 H010 N3571
180	200	14	15	C1 J005 N3571
190	210	14	15	C1 K010 N3571
200	220	14	15	C1 L015 N3571
200	230	15	16	C1 L025 N3571
225	250	14	15	C1 M020 N3571
235	265	21	22	C1 M030 N3571
240	270	20	21	C1 N035 N3571
260	290	21	22	C1 O010 N3571
280	310	20	21	C1 O031 N3571
320	350	20	21	C1 Q050 N3571

Further sizes on request.

Tel: +45 63 12 83 00 | Email: ps@hymatik.com | www.hymatik.com | Hvidkaervej 27a, DK-5250 Odense SV, Denmark

Rod Seal

GS



The GS Ultrathan® rod seal is a U-ring with interference fit on the outer diameter. It has been developed specifically for the exacting requirements of gas spring applications, which in addition to small grooves are long service life and maximum gas tightness. The short seal contact area ensures minimum friction. In addition to gas spring applications, these properties make this seal suitable for use in hydraulic and pneumatic equipment with identical requirements profiles.

- Good wear resistance.
- Easy installation.
- High temperature resistance in case of suitable compound selection.
- Excellent media resistance in case of suitable compound selection.
- Suitable compounds available for special requirements of the chemical process industry.
- Suitable compounds available for special requirements of the food processing industry.
- Installation in closed and undercut housings.

Range of Application

The GS rod seal is particularly well suited for gas springs, piston rods, spindles and valve lifters as well as for slow-running rotary distributors (v ≤ 0.2 m/s).

Operating pressure	≤ 200 bar [1)]
Hydraulics	≤ 200 bar
Gas springs	≤ 200 bar
Rotary transmissions	≤ 20 bar
Operating temperature	-35 °C to +90 °C
Sliding speed	
Hydraulics	≤ 1 m/s
Gas springs	≤ 1 m/s
Rotary transmissions	≤ 0.2 m/s

Recommendation for rotary transmissions: P × v ≤ 3
(For definition see catalogue „Hydraulic Seals“, chapter „Rotary Seals“, introduction).

[1)] Dependent upon cross-section and compound.

Compounds

Standard: P5008, TPU (≈ 94 Shore A).
For high pressures (> 200 bar): P6000, TPU (≈ 94 Shore A).
For low temperatures (> 55 °C): P5009, TPU (≈ 93 Shore A).
For high temperatures (< 120 °C): P4300, TPU (≈92 Shore A).

Installation

Profile GS rod seals are manufactured with an oversized outer diameter, which results in the required secure press fit on the adhesion part. The sealing lip only achieves the require size during installation. GS rod seals can be easily snapped into the housing by deforming them in the shape of a kidney. When selecting the seal for a certain diameter the seal with the largest possible cross-section should be given preference.

In the case of nominal diameters ≤ 25 mm, depending on the seal‘s cross-section and position of the installation groove, an open housing is recommended.
For applications in gas springs – as opposed to the general installation guidelines contained in our catalogues – we recommend housings with improved surface requirements.
Dynamic sealing: R_z < 0.5 µm
Static sealing: R_z < 1.0 µm
Percentage of contact area: t_p > 80 %

In case of special operating conditions (specific pressure loads, temperature, speed, use in water, HFA, HFB fluids etc.), please contact our consultancy service for a selection of the material and design best suiting your particular application requirements.

Tel: +45 63 12 83 00 | Email: ps@hymatik.com | www.hymatik.com | Hvidkaervej 27a, DK-5250 Odense SV, Denmark

Rod Seal

GS

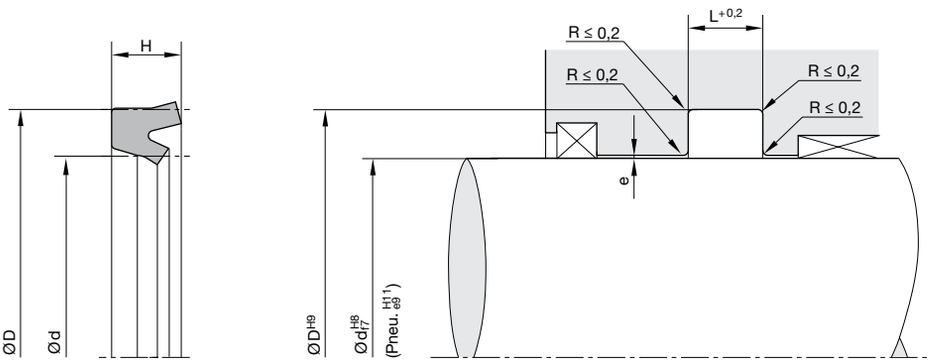

„e“ see chapter „Maximum gap allowance“.

For surface finish, lead in chamfer and other installation dimensions see „General installation guidelines“.

d,	D,	H,	L,	Order code
3	6.5	3	3.5	GS 0306 P5008
4	8	3	3.5	GS 0408 P5008
5	9	2.6	3	GS 0509 P5008
6	10	3	3.5	GS 0610 P5008
8	14	4	4.5	GS 0814 P5008
10	16	4	4.5	GS 1016 P5008
12	20	5.5	6	GS 1220 P5008
14	22	5.5	6	GS 1422 P5008
16	22	5	5.5	GS 1622 P5008
20	28	5.5	6	GS 2028 P5008

Further sizes on request.

Tel: +45 63 12 83 00 | Email: ps@hymatik.com | www.hymatik.com | Hvidkaervej 27a, DK-5250 Odense SV, Denmark

Rod seal

HL



The HL Ultrathan® rod seal is a friction-optimized sealing solution for mobile and stationary hydraulics featuring a unique functional principle. The single-acting rod seal with interference fit on the outer diameter has pressure-activated, cascading sealing edges for clearly reduced static and dynamic friction in hydraulic cylinders and higher effectiveness of hydraulic systems.

- Minimal break-away and dynamic friction and no stick-slip tendency ensures uniform motion even at low speeds.
- No stick-slip tendency in case of low sliding speeds.
- Low break-away and dynamic friction, even after prolonged standstill under high pressure.
- Constantly low dynamic friction throughout the part's service life.
- Insensitive to pressure peaks.
- Improved lubrication due to pressure medium deposit in the dynamic contact area.
- High extrusion resistance.
- Excellent media resistance in case of suitable compound selection.
- Suitable compounds available for special requirements of the chemical process industry.
- Suitable compounds available for special requirements of the food processing industry.
- Dimensions according to ISO 5597.
- Short axial assembly length.
- Installation in closed and undercut housings.
- Additional sizes of machined products available on short notice.

Range of Application

Mainly for applications with increased requirements regarding friction and sliding behaviour in mobile and stationary hydraulics. The dimensions mainly conform to the requirements of ISO 5597 for housing and diameters respectively.

Operating pressure	≤ 250 bar
Operating temperature	-35 °C to +110 °C
Sliding speed	≤ 1 m/s
Media	Hydraulic oils based on mineral oil and PAO fluids

Compounds

The Ultrathan® P6030 compound is a Parker material based on polyurethane with a hardness of approx. 93 Shore A. Its main advantages in comparison with other polyurethane materials currently available on the market are its excellent wear resistance, low compression set and improved temperature resistance.

Installation

The seals should have an axial clearance (see columns H and L). To avoid damage at the sealing lips, the seals should not be pulled over sharp edges during installation.
Normally these seals may be snapped into closed grooves. Where access is restricted special assembly tools may be required. Proposals for the design of such tools will be provided on request. For gap sizes see chapter „Maximum Gap Allowance".

In case of special operating conditions (specific pressure loads, temperature, speed, use in water, HFA, HFB fluids etc.), please contact our consultancy service for a selection of the material and design best suiting your particular application requirements.

Tel: +45 63 12 83 00 | Email: ps@hymatik.com | www.hymatik.com | Hvidkaervej 27a, DK-5250 Odense SV, Denmark

Rod seal

HL

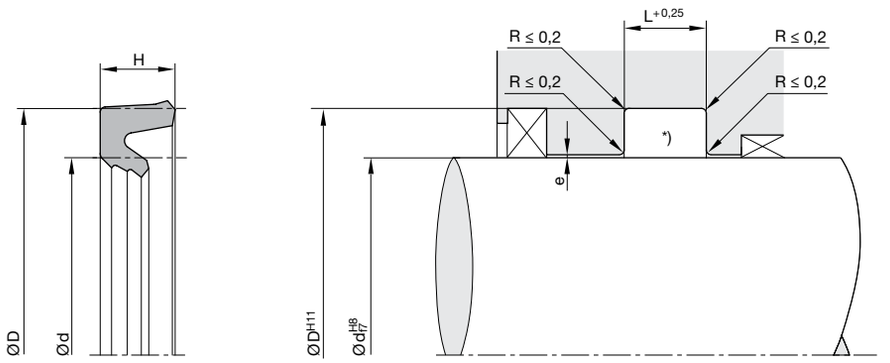

For surface finish, lead in chamfer and other installation dimensions see „General installation guidelines“.

d	D	H	L	Order code
20	28	4.5	5	HL 2028 P6030
22	30	4.5	5	HL 2230 P6030
25	33	4.5	5	HL 2533 P6030
30	40	5.7	6.3	HL 3040 P6030
32	42	5.7	6.3	HL 3242 P6030
35	45	5.7	6.3	HL 3545 P6030
37	47	5.7	6.3	HL 3747 P6030
40	50	5.7	6.3	HL 4050 P6030
45	55	5.7	6.3	HL 4555 P6030
50	60	5.7	6.3	HL 5060 P6030
56	66	6.5	7	HL 5666 P6030
65	75	7	7.5	HL 6575 P6030

Further sizes on request.

Tel: +45 63 12 83 00 | Email: ps@hymatik.com | www.hymatik.com | Hvidkaervej 27a, DK-5250 Odense SV, Denmark

Rod seal

R3



The R3 rod seal is a compact seal with a secondary sealing lip and an anti-extrusion ring. This combination is characterized by smooth running properties, excellent sealing performance and high wear resistance even in harsh operating conditions. Due to their radial preloading, the sealing lips reliably wipe off the liquid film even in low-pressure conditions or non-pressurized movement of the rod.
As an FKM version the R3 rod seal can be used as a high-temperature variant for TPU rod seals.

- Enhanced sealing performance in non-pressurized conditions.
- Good wear resistance.
- Insensitive to pressure peaks.
- High temperature resistance in case of suitable compound selection.
- Improved lubrication due to pressure medium deposit in the dynamic contact area.
- High extrusion resistance.
- Excellent media resistance in case of suitable compound selection.
- Suitable compounds available for special requirements of the chemical process industry.
- Suitable compounds available for special requirements of the food processing industry.
- Dimensions according to ISO 5597.
- Installation in closed and undercut housings.

Range of Application

Sealing of piston rods in hydraulic cylinders.

Operating pressure	≤ 315 bar
Operating temperature	-30 °C to +100 °C
Sliding speed	≤ 0.5 m/s

Compounds

Rubber part:
Standard: N3544, NBR compound (≈ 88 Shore A).
For high temperatures: V3664, FKM compound (≈ 85 Shore A).
Glide ring: Polon® 062, modified PTFE + 60 % bronze.

Installation

This rod seal profile R3 is manufactured with a slightly oversized outer diameter, thus ensuring a tight fit in the groove. The preload at the inner diameter necessary for the functioning of the seal will only be generated after installation.
The working life of the seal is mainly influenced by the max. gap at the pressure-opposite of the sealing element.

In case of special operating conditions (specific pressure loads, temperature, speed, use in water, HFA, HFB fluids etc.), please contact our consultancy service for a selection of the material and design best suiting your particular application requirements.

Tel: +45 63 12 83 00 | Email: ps@hymatik.com | www.hymatik.com | Hvidkaervej 27a, DK-5250 Odense SV, Denmark

Rod seal

R3

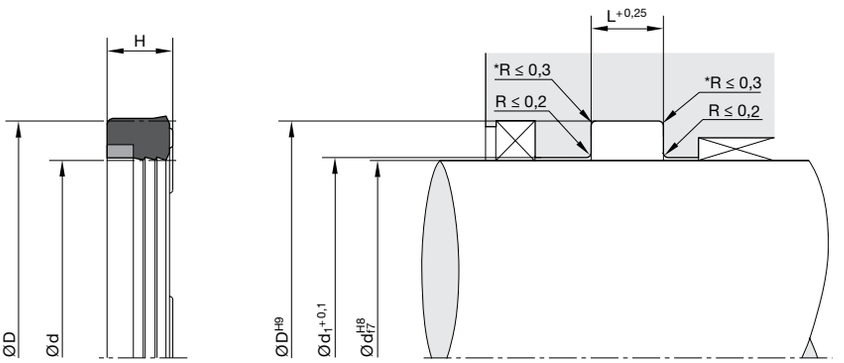

** In the case of designs according to ISO standard, the radii given there should be used.*

For surface finish, lead in chamfer and other installation dimensions see „General installation guidelines“.

d	D	H	L	d_1	ISO[1)]	Order code
14	22	7	7.5	14.2		R3 0009 00252
15	24	7	7.5	15.2		R3 0008 00252
16	24	5.8	6.3	16.2	·	R3 0017 00252
16	26	7.5	8	16.2	·	R3 0018 00252
18	25	7	7.5	18.2		R3 0019 00252
18	26	5.8	6.3	18.2	·	R3 0020 00252
20	28	5.8	6.3	20.3	·	R3 0022 00252
20	30	8	9	20.3		R3 0024 00252
22	32	7.5	8	22.3	·	R3 0028 00252
25	33	5.8	6.3	25.3	·	R3 0029 00252
25	33	7	7.5	25.3		R3 0030 00252*
25	37	10	11	25.3		R3 0032 00252
28	36	7	7.5	28.3		R3 0034 00252
30	40	10	11	30.3		R3 0004 00252
32	45	10	11	32.3		R3 0049 00252
35	45	8.5	9.5	35.3		R3 0050 00251
36	44	7	7.5	36.3		R3 0042 00252
36	44	8	9	36.3		R3 0043 00252
36	46	7.5	8	36.3	·	R3 0044 00252
36	46	10	11	36.3		R3 0045 00252
40	50	7.5	8	40.4	·	R3 0040 00251
40	50	10	11	40.4		R3 0050 00251
45	53	8	9	45.4		R3 0073 00251
45	55	7.5	8	45.4	·	R3 0053 00251
45	60	11	12.5	45.4	·	R3 0055 00251
55	63	7	7.5	55.4		R3 0064 00251
56	68	10	11	56.4		R3 0077 00251
56	71	12	12.5	56.4	·	R3 0059 00251
60	68	8	9	60.4		R3 0066 00251
60	70	7.5	8	60.4		R3 0067 00251
63	78	11.5	12.5	63.4	·	R3 0062 00251
70	85	12	12.5	70.4	·	R3 0069 00251
80	92	10	11	80.4		R3 0079 00251
80	95	12	12.5	80.4	·	R3 0080 00251

d	D	H	L	d_1	ISO[1)]	Order code
100	120	15	16	100.4	·	R3 0101 00251
100	125	19	20	100.4		R3 0102 00251
110	130	15	16	110.4	·	R3 0110 00251
180	205	19	20	180.4	·	R3 0180 00251
280	310	23	25	280.4	·	R3 0280 00251

1) ISO 5597
* Moulds not available on the date of printing.
Further sizes on request.

Tel: +45 63 12 83 00 | Email: ps@hymatik.com | www.hymatik.com | Hvidkaervej 27a, DK-5250 Odense SV, Denmark

Rod seal

B3



The B3 Ultrathan® rod seal is a U-ring with interference fit on the outer diameter. It is extremely wear-resistant, ensures reliable load holding performance and is suitable for high-pressure applications in hydraulics.

- Robust seal profile for harshest operating conditions.
- Extreme wear resistance.
- Easier installation.
- Insensitive to pressure peaks.
- High extrusion resistance.
- Excellent media resistance in case of suitable compound selection.
- Suitable compounds available for special requirements of the chemical process industry.
- Suitable compounds available for special requirements of the food processing industry.
- Dimensions according to ISO 5597.
- Installation in closed and undercut housings.
- Low compression set.
- Additional sizes of machined products available on short notice.

Range of Application

Mainly for sealing piston rods and plungers in heavy-duty mobile and stationary hydraulics applications. The range of dimensions is primarily oriented to the requirements of ISO 5597 and ISO 3320 for housings and diameters.

Operating pressure	≤ 400 bar
Operating temperature	-35 °C to +110 °C
Sliding speed	≤ 0.5 m/s
Media	Hydraulic oils based on mineral oil

Compounds

Standard quality for the elastomer part is Ultrathan® P5008, a Parker material based on polyurethane with a hardness of approx. 93 Shore A. Compared to other commercially available polyurethane grades, it is distinguished in particular by higher heat resistance and improved wear behavior.
For low temperatures, Ultrathan® P5009 is recommended.
For water-containing media, the hydrolysis-resistant polyurethane material P5001 is recommended.

Installation

The seals should have an axial clearance (see columns H and L). To avoid damage at the sealing lips, the seals should not be pulled over sharp edges during installation.
Normally these seals may be snapped into closed grooves. Where access is restricted special assembly tools may be required. Proposals for the design of such tools will be provided on request. For gap sizes see chapter “Maximum Gap Allowance”.

In case of special operating conditions (specific pressure loads, temperature, speed, use in water, HFA, HFB fluids etc.), please contact our consultancy service for a selection of the material and design best suiting your particular application requirements.

Tel: +45 63 12 83 00 | Email: ps@hymatik.com | www.hymatik.com | Hvidkaervej 27a, DK-5250 Odense SV, Denmark

Rod seal

B3

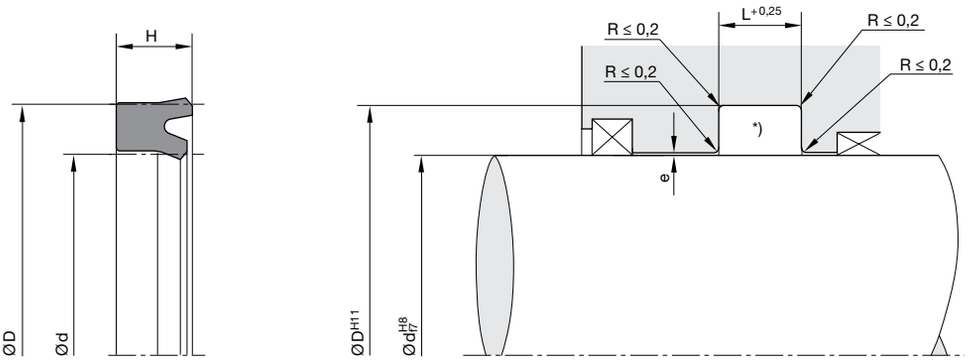

** In the case of designs according to ISO standard, the radii given there should be used.*
„e“ see chapter „Maximum gap allowance“.

For surface finish, lead in chamfer and other installation dimensions see „General installation guidelines“.

d	D	H	L	ISO[1]	ISO[2]	Order code
4	12	6	7			B3 0412 P5008
6	13	5	5.6			B3 0613 P5008
6	14	5.7	6.3		·	B3 0614 P5008
8	14	5	5.6			B3 0814 P5008
8	16	5.7	6.3		·	B3 0816 P5008
9	14.5	5	5.6			B3 0914 P5008
9	16	5.7	6.3			B3 0916 P5008
10	14	3.7	4.2			B3 1015 P5008
10	16	4.5	5.2			B3 1016 P5008
10	17	5.7	6.3			B3 1017 P5008
10	18	5.7	6.3		·	B3 1018 P5008
12	19	5	5.6	·	·	B3 1211 P5008
12	20	5.7	6.3		·	B3 1212 P5008
12	22	7.3	8		·	B3 1222 P5008
14	21	5	5.6	·	·	B3 1421 P5008
14	22	7.3	8			B3 1422 P5008
14	24	7.3	8		·	B3 1424 P5008
15	25	8	9			B3 1525 P5008
16	22	5	5.6			B3 1620 P5008
16	24	5.7	6.3		·	B3 1624 P5008
16	26	7.3	8		·	B3 1626 P5008
18	24	5	5.6			B3 1824 P5008
18	25	5	5.6	·	·	B3 1826 P5008
18	26	5.7	6.3			B3 1825 P5008
18	28	7.3	8		·	B3 1827 P5008
18	28	8	9			B3 1828 P5008
19.05	25.4	6.35	7.14			B3 1905 P5008
20	26	5	5.6			B3 2026 P5008
20	28	5.7	6.3		·	B3 2028 P5008
20	30	7.3	8		·	B3 2030 P5008
22	28	5	5.6			B3 2225 P5008
22	29	5	5.6	·	·	B3 2229 P5008
22	30	5.7	6.3		·	B3 2230 P5008
22	32	7.3	8		·	B3 2232 P5008
25	32	6	7			B3 2525 P5008
25	33	5.7	6.3		·	B3 2532 P5008
25	33	6.5	7.3			B3 2533 P5008
25	35	7.3	8		·	B3 2535 P5008
25	40	10	11			B3 2537 P5008
25	40	11	12			B3 2539 P5008
28	36	5.7	6.3	·	·	B3 2836 P5008
28	36	8	9			B3 2837 P5008
28	38	7.3	8		·	B3 2038 P5008
28	38	10	11			B3 2838 P5008
30	38	5.7	6.3			B3 3003 P5008
30	38	8	9			B3 3002 P5008
30	40	7.3	8		·	B3 3040 P5008
30	40	10	11			B3 3005 P5008
32	40	6	7			B3 3206 P5008
32	40	6.7	7.5			B3 3240 P5008
32	42	7.3	8		·	B3 3242 P5008
32	42	10	11			B3 3243 P5008
32	45	10	11			B3 3245 P5008
32	47	10	11			B3 3020 P5008
35	43	6	6.7			B3 3506 P5008
35	45	7	8			B3 3544 P5008
35	45	10	11			B3 3545 P5008
36	44	5.7	6.3	·	·	B3 3644 P5008
36	46	7.3	8		·	B3 3646 P5008
38	50	10	11			B3 3800 P5008
40	48	5.7	6.3			B3 4002 P5008
40	48	8	9			B3 4003 P5008
40	50	7.3	8		·	B3 4004 P5008
40	50	8	9			B3 4006 P5008
40	50	10	11			B3 4005 P5008
41.22	50.8	8.3	9.1			B3 4022 P5008
42.25	52	9.5	10.5			B3 4043 P5008
45	53	5.6	6.3	·	·	B3 4050 P5008

1) For housings according to ISO 5597 for ISO 6020-2 cylinders.
2) Standard sizes for housings according to ISO 5597.
Further sizes on request.

Tel: +45 63 12 83 00 | Email: ps@hymatik.com | www.hymatik.com | Hvidkaervej 27a, DK-5250 Odense SV, Denmark

Rod seal

B3

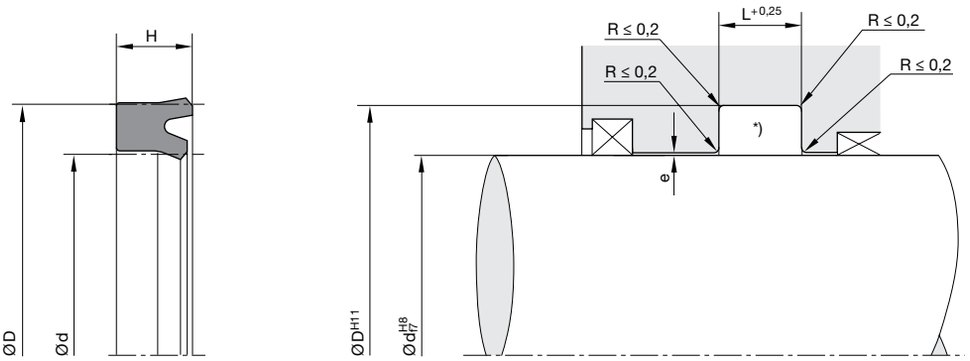

** In the case of designs according to ISO standard, the radii given there should be used.*
„e“ see chapter „Maximum gap allowance“.

For surface finish, lead in chamfer and other installation dimensions see „General installation guidelines“.

d	D	H	L	ISO[1]	ISO[2]	Order code
45	53	8	9			B3 4502 P5008
45	53	10	11			B3 4553 P5008
45	55	5.8	6.5			B3 4554 P5008
45	55	7.3	8		·	B3 4555 P5008
45	55	10	11			B3 4556 P5008
45	57	9	10			B3 4557 P5008
45	60	11.4	12.5		·	B3 4560 P5008
50	58	8	9			B3 5002 P5008
50	60	7.3	8		·	B3 5004 P5008
50	60	10	11			B3 5006 P5008
50	65	11.4	12.5		·	B3 5065 P5008
50.8	63.5	9.5	10.3			B3 5008 P5008
55	63	8	9			B3 5555 P5008
55	65	7.3	8			B3 5563 P5008
55	65	10	11			B3 5565 P5008
55	65	12	13			B3 5570 P5008
55	70	10	11			B3 5070 P5008
56	66	6.5	7.5	·	·	B3 5666 P5008
56	71	8.6	9.5			B3 5668 P5008
56	71	11.4	12.5		·	B3 5671 P5008
57.15	69.85	9.53	10.3			B3 5077 P5008
60	68	8	9			B3 6068 P5008
60	70	10	11			B3 6070 P5008
60	75	10	11			B3 6074 P5008
63	73	6.5	7.3			B3 6372 P5008
63	73	12	13			B3 6373 P5008
63	75	10	11			B3 6375 P5008
63	78	10	11			B3 6377 P5008
63	78	11.4	12.5		·	B3 6378 P5008
63.5	76.2	9.53	10.3			B3 6064 P5008
65	73	8	9			B3 6502 P5008
65	75	7	8			B3 6076 P5008
65	75	12	13			B3 6075 P5008
65	80	12	13			B3 6504 P5008

d	D	H	L	ISO[1]	ISO[2]	Order code
69.8	82.6	9.75	10.5			B3 6980 P5008
70	78	8	9			B3 7070 P5008
70	80	6.5	7.5			B3 7079 P5008
70	80	7	7.8			B3 7078 P5008
70	80	12	13			B3 7080 P5008
70	82	8.7	9.7			B3 7082 P5008
70	85	11.4	12.5		·	B3 7085 P5008
75	85	7	8			B3 7585 P5008
75	85	12	13			B3 7586 P5008
75	88	10	11			B3 7588 P5008
75	90	10	11			B3 7590 P5008
75	90	12	13			B3 7591 P5008
76.2	88.9	9.53	10.3			B3 7620 P5008
78	86	8.5	9.5			B3 7800 P5008
80	90	7	8			B3 8088 P5008
80	90	10	11			B3 8089 P5008
80	90	12	13			B3 8090 P5008
80	95	10	11			B3 8093 P5008
80	95	11.4	12.5		·	B3 8094 P5008
80	100	12	13			B3 8099 P5008
85	100	9	10			B3 8509 P5008
85	100	12	13			B3 8510 P5008
85	105	12	13			B3 8505 P5008
88.9	101.6	9.53	10.3			B3 8889 P5008
90	100	6.5	7.5	·	·	B3 9001 P5008
90	102	9	10			B3 9002 P5008
90	105	9	10			B3 9004 P5008
90	105	11.4	12.5		·	B3 9005 P5008
90	110	12	13			B3 9009 P5008
90	110	14.5	16			B3 9010 P5008
92	105	9.5	10.6			B3 9210 P5008
95	110	9	10			B3 9505 P5008
100	115	9	10			B3 A015 P5008
100	120	11.5	12.5			B3 A018 P5008

1) For housings according to ISO 5597 for ISO 6020-2 cylinders.
2) Standard sizes for housings according to ISO 5597.
Further sizes on request.

Tel: +45 63 12 83 00 | Email: ps@hymatik.com | www.hymatik.com | Hvidkaervej 27a, DK-5250 Odense SV, Denmark

Rod seal

B3

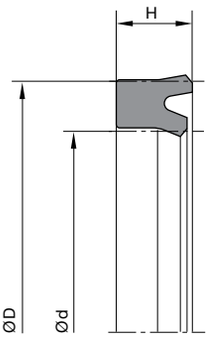

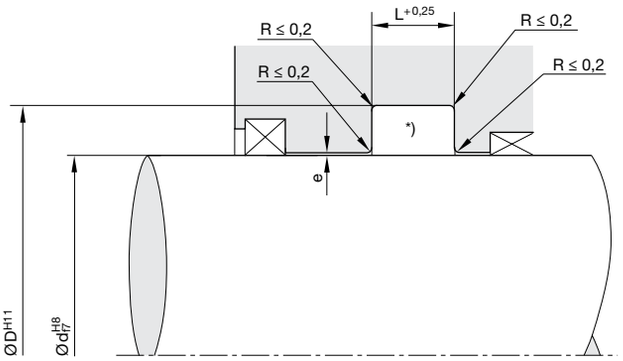

** In the case of designs according to ISO standard, the radii given there should be used.*
„e“ see chapter „Maximum gap allowance“.

For surface finish, lead in chamfer and other installation dimensions see „General installation guidelines“.

d	D	H	L	ISO[1]	ISO[2]	Order code
100	120	14.5	16		·	B3 A020 P5008
105	120	10	11			B3 A503 P5008
105	120	11.4	12.5			B3 A511 P5008
105	125	14.5	16			B3 A505 P5008
110	125	9	10			B3 B024 P5008
110	125	9.6	10.6	·	·	B3 B025 P5008
110	130	12	13			B3 B029 P5008
110	130	14.5	16		·	B3 B030 P5008
114.3	130.18	9.53	10.3			B3 B044 P5008
115	135	11.5	12.5			B3 B052 P5008
120	135	14.5	16			B3 C017 P5008
120	140	15	16			B3 C040 P5008
125	145	12	13			B3 C244 P5008
125	145	14.5	16		·	B3 C245 P5008
125.1	140.5	9.8	10.9			B3 C224 P5008
130	150	12	13			B3 D049 P5008
130	150	15	16			B3 D050 P5008
140	155	9.6	10.6	·	·	B3 E055 P5008
140	160	14.5	16		·	B3 E060 P5008
145	165	14.5	16			B3 E065 P5008
150	170	15	16			B3 F070 P5008
152.4	171.45	12.7	13.49			B3 F072 P5008
160	180	15	16			B3 G080 P5008
160	185	18.2	20		·	B3 G085 P5008
170	200	18.2	20			B3 H020 P5008
180	200	15	16			B3 J020 P5008
180	205	18.2	20		·	B3 J005 P5008
190	210	15	16			B3 K005 P5008
200	225	18.2	20		·	B3 L025 P5008
200	230	18	19			B3 L030 P5008
210	230	15	16			B3 L110 P5008
220	250	22.7	25		·	B3 M050 P5008
225	250	18	19			B3 M070 P5008
250	280	22.7	25		·	B3 N580 P5008
280	300	15	16			B3 P005 P5008
280	310	22.7	25		·	B3 P010 P5008

1) For housings according to ISO 5597 for ISO 6020-2 cylinders.
2) Standard sizes for housings according to ISO 5597.
Further sizes on request.

Tel: +45 63 12 83 00 | Email: ps@hymatik.com | www.hymatik.com | Hvidkaervej 27a, DK-5250 Odense SV, Denmark

Rod seal

BS



The BS Ultrathan® rod seal is a U-ring with interference fit on the outer diameter and a secondary sealing lip. It is extremely wear-resistant, ensures reliable load holding performance and is suitable for high-pressure hydraulic applications. The additional lip results in a larger deposit of lubrication film underneath the seal. This largely prevents dry running and higher wear, and achieves longer service life. Due to its radial preloading, the secondary sealing lip reliably wipes off the liquid film even in low pressure conditions or non-pressurized movement of the rod. For telescopic cylinders, we recommend the version with a 4-mm profile width.

- Excellent sealing performance due to elongated contact area and multiple sealing lips.
- Exceptionally high static and dynamic sealing performance.
- Enhanced sealing performance in non-pressurized conditions.
- Penetration of air into the system is largely prevented.
- Robust seal profile for harshest operating conditions.
- Extreme wear resistance.
- Easier installation.
- Insensitive to pressure peaks.
- Improved lubrication due to pressure medium deposit in the dynamic contact area.
- High extrusion resistance.
- Excellent media resistance in case of suitable compound selection.
- Suitable compounds available for special requirements of the chemical process industry.
- Suitable compounds available for special requirements of the food processing industry.
- Dimensions according to ISO 5597.
- Short radial assembly depth.
- Installation in closed and undercut housings.
- Additional sizes of machined products available on short notice.

Range of Application

Mainly for sealing piston rods and plungers in heavy-duty applications in mobile and stationary hydraulics. The range of dimensions is primarily oriented to the requirements of ISO 5597 and ISO 3320 for housings and diameters.

Operating pressure	≤ 400 bar
Operating temperature	-35 °C to +110 °C
Sliding speed	≤ 0.5 m/s
Media	Hydraulic oils based on mineral oil

Compounds

The compound Ultrathan® P5008 is a Parker standard material based on polyurethane with a Shore A hardness of approx. 93. Its main advantages in comparison with other polyurethane materials currently available on the market are the increased heat resistance and a better wear resistence.
For low temperatures, the material Ultrathan® P5009 is recommended.
For media containing water, we recommend our hydrolysis-resistent polyurethane compound P5001.

Installation

The seals should have an axial clearance (see columns H and L). To avoid damage at the sealing lips, the seals should not be pulled over sharp edges during installation.
Normally these seals may be snapped into closed grooves. Where access is restricted special assembly tools may be required. Proposals for the design of such tools will be provided on request. For gap sizes see chapter “Maximum Gap Allowance”.

In case of special operating conditions (specific pressure loads, temperature, speed, use in water, HFA, HFB fluids etc.), please contact our consultancy service for a selection of the material and design best suiting your particular application requirements.

Tel: +45 63 12 83 00 | Email: ps@hymatik.com | www.hymatik.com | Hvidkaervej 27a, DK-5250 Odense SV, Denmark

Rod seal

BS

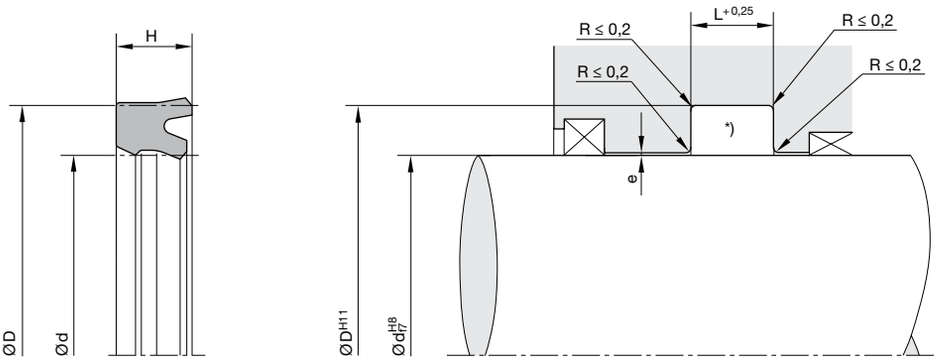

** In the case of designs according to ISO standard, the radii given there should be used.*
„e“ see chapter „Maximum gap allowance“.

For surface finish, lead in chamfer and other installation dimensions see „General installation guidelines“.

d	D	H	L	ISO[1]	ISO[2]	Order code
8	16	5.7	6.3		·	BS 0816 P5008
9	16	5.7	6.3			BS 0916 P5008
10	16	4.5	5.3			BS 1016 P5008
10	17	5.7	6.3			BS 1017 P5008
10	18	5.7	6.3		·	BS 1018 P5008
14	20	5.7	6.3			BS 1420 P5008
14	22	5.7	6.3		·	BS 1422 P5008
16	24	5.8	6.3		·	BS 1624 P5008
16	26	7.3	8		·	BS 1626 P5008
18	28	7.3	8		·	BS 1827 P5008
20	30	7.3	8		·	BS 2030 P5008
22	32	7.3	8		·	BS 2232 P5008
25	33	6.5	7.3			BS 2533 P5008
25	35	7.3	8		·	BS 2535 P5008
26	36	10	11			BS 2605 P5008
28	36	7	7.5			BS 2836 P5008
28	38	7.3	8		·	BS 2838 P5008
30	40	10	11			BS 3005 P5008
30	45	10	11			BS 3030 P5008
32	42	7.3	8		·	BS 3242 P5008
32	42	10	11			BS 3243 P5008
32	45	10	11			BS 3245 P5008
35	45	10	11			BS 3545 P5008
35	50	10	11			BS 3550 P5008
36	46	7.3	8		·	BS 3646 P5008
36	48	10	11			BS 3649 P5008
36	51	10	11			BS 3651 P5008
37	47	10	11			BS 3747 P5008
40	48	11.5	12.5			BS 4004 P5008
40	49.52	9.6	10.5			BS 4049 P5008
40	50	10	11			BS 4005 P5008
40	52	8	9			BS 4008 P5008
40	55	11.4	12.5		·	BS 4007 P5008
45	53	5.6	6.3	·	·	BS 4553 P5008
45	55	7.3	8		·	BS 4555 P5008
45	55	10	11			BS 4556 P5008
45	60	10.5	11.5			BS 4562 P5008
45	60	11.4	12.5		·	BS 4561 P5008
46	56	10	11			BS 4605 P5008
48	56	11.5	12.5			BS 4856 P5008
50	60	7.3	8		·	BS 5004 P5008
50	60	10	11			BS 5006 P5008
50	65	10	11			BS 5064 P5008
50	65	11.4	12.5		·	BS 5065 P5008
52	62	10	11			BS 5203 P5008
55	65	10	11			BS 5564 P5008
55	67	10	11			BS 5567 P5008
56	71	11.4	12.5		·	BS 5609 P5008
60	70	7.5	8.5			BS 6069 P5008
60	70	10	11			BS 6070 P5008
60	75	10	11			BS 6074 P5008
63	71	8	9			BS 6371 P5008
63	78	10	11			BS 6377 P5008
63	78	11.4	12.5		·	BS 6378 P5008
65	73	11.5	12.5			BS 6573 P5008
65	75	12	13			BS 6075 P5008
65	85	11.4	12.5			BS 6578 P5008
68	78	12	13			BS 6805 P5008
70	80	12	13			BS 7080 P5008
70	85	10	11			BS 7084 P5008
70	85	11.4	12.5		·	BS 7085 P5008
75	88	10	11			BS 7588 P5008
75	90	10	11			BS 7590 P5008
80	88	11.5	12.5			BS 8088 P5008
80	90	12	13			BS 8090 P5008
80	95	11.4	12.5		·	BS 8095 P5008
80	100	12	13			BS 8099 P5008
82.55	95.25	9.53	10.3			BS 8255 P5008

1) For housings according to ISO 5597 for ISO 6020-2 cylinders.
2) Standard sizes for housings according to ISO 5597.
Further sizes on request.

Tel: +45 63 12 83 00 | Email: ps@hymatik.com | www.hymatik.com | Hvidkaervej 27a, DK-5250 Odense SV, Denmark

Rod seal

BS

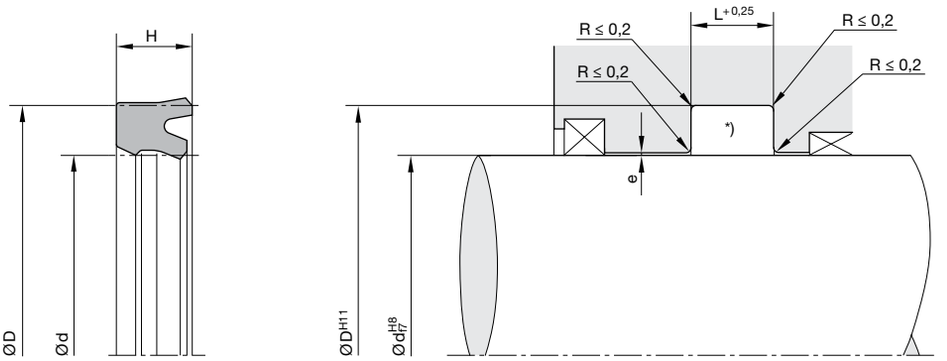

** In the case of designs according to ISO standard, the radii given there should be used.*
„e“ see chapter „Maximum gap allowance“.

For surface finish, lead in chamfer and other installation dimensions see „General installation guidelines“.

d	D	H	L	ISO[1]	ISO[2]	Order code
85	93	11.5	12.5			BS 8593 P5008
85	100	12	13			BS 8510 P5008
90	98	11.5	12.5			BS 9098 P5008
90	105	11.4	12.5		·	BS 9005 P5008
92	107	11.4	12.5			BS 9203 P5008
95	115	12	13			BS 9515 P5008
97	105	13	14			BS 9705 P5008
100	108	12	13			BS A008 P5008
100	120	12	13			BS A019 P5008
100	120	14.5	16		·	BS A020 P5008
105	113	11.5	12.5			BS A513 P5008
105	117	9.1	10			BS A517 P5008
110	125	14.5	16			BS B025 P5008
110	130	14.5	16		·	BS B030 P5008
120	128	11.5	12.5			BS C028 P5008
120	130	14	15			BS C030 P5008
125	133	11.5	12.5			BS C233 P5008
128	136	9.1	10			BS C836 P5008
128	140	9.1	10			BS C840 P5008
130	145	12	13			BS D045 P5008
140	160	14.5	16		·	BS E060 P5008
145	153	11.5	12.5			BS E050 P5008
150	170	15	16			BS F070 P5008
152	160	9.1	10			BS F252 P5008
152	164	9.1	10			BS F264 P5008
160	185	18.2	20		·	BS G085 P5008
167	175	11.5	12.5			BS G704 P5008
167	176	11.5	12.5			BS G705 P5008
170	200	18	19			BS H020 P5008
176	186	12	13			BS H160 P5008
177.7	195	9.73	11.3			BS H169 P5008
180	188	9.1	10			BS J080 P5008
180	188	11.5	12.5			BS J088 P5008
180	192	9.1	10			BS J092 P5008
193	201	11.5	12.5			BS K003 P5008
200	225	18.2	20		·	BS L025 P5008
209.55	226.77	9.73	11.3			BS L008 P5008
212	220	9.1	10			BS L012 P5008
212	224	9.1	10			BS L024 P5008
220	250	22.7	25		·	BS M050 P5008
228.5	246	9	10			BS M085 P5008
230	260	22.7	25			BS M110 P5008
250	280	22.7	25		·	BS N580 P5008
266.7	284	9.73	11.3			BS O005 P5008
280	310	18	19			BS P008 P5008

1) For housings according to ISO 5597 for ISO 6020-2 cylinders.
2) Standard sizes for housings according to ISO 5597.
Further sizes on request.

Tel: +45 63 12 83 00 | Email: ps@hymatik.com | www.hymatik.com | Hvidkaervej 27a, DK-5250 Odense SV, Denmark

Rod sealing set, Polon®

OD



The single-acting OD rod sealing set featuring a Slipper Seal® design consists of a PTFE rod seal and an elastomer O-ring as a preloading element. The asymmetrical cross-section of the seal has been designed for optimum return of drag or trapped oil back into the cylinder. When the rod extends from the cylinder the OD profile is riding on a sealing point, creating a high compression point to limit leakage. As the rod goes through its return stroke, this seal rocks forward, creating a larger sealing surface on the rod. The compression force is spread out over a larger area allowing trapped fluid to pass under the seal and return to the system.

The optimum sealing effect is achieved by installation as a buffer seal in a tandem arrangement with a primary rod seal or with itself and in combination with a wiper ring.

The OD product series is particularly well suited for piston rods in control cylinders, servo-assisted systems, machine tools and quick-acting cylinders. The sealing set is successfully used in the automotive industry (e.g. in shock absorbers) and the process industry as well. Due to the material combination of the slide ring (PTFE) and the O-ring (elastomer), this product is suitable for a wide range of applications, especially for aggressive media and/or high temperatures. Several alternative compounds may be selected depending on the specific application profile.

- Good sealing performance in extremely small assembly conditions.
- Excellent wear resistance.
- Minimal break-away and dynamic friction and no stick-slip tendency ensures uniform motion even at low speeds.
- Good energy efficiency due to low friction.
- Insensitive to pressure peaks.
- High temperature resistance assured by suitable O-ring compound selection.
- High extrusion resistance.
- Adaptable to nearly all media thanks to high chemical resistance of the sealing ring and large O-ring compound selection.
- Dimensions according to ISO 7425-2.
- Also available as double-acting version.
- Short axial assembly length.
- Installation in closed and undercut housings.
- Available in diameters from 4 to 4500 mm.
- Additional sizes of machined products available on short notice.

Range of Application

Rod sealing set for hydraulic cylinders.

Operating pressure	≤ 400 bar
in case of reduced extrusion gap (H7/f7) and large cross sections	≤ 600 bar
Operating temperature	-30 °C to +100 °C [1]
Sliding speed	≤ 4 m/s

[1] With deviation from standard temperature range, please contact our consultancy service for adequate O-ring compound.

Compounds

Sealing ring: Polon® 052, PTFE + 40 % bronze.
O-ring: N0674, NBR elastomer with approx. 70 Shore A.

Installation

For diameters < 30 mm open grooves are required.

In case of special operating conditions (specific pressure loads, temperature, speed, use in water, HFA, HFB fluids etc.), please contact our consultancy service for a selection of the material and design best suiting your particular application requirements.

Tel: +45 63 12 83 00 | Email: ps@hymatik.com | www.hymatik.com | Hvidkaervej 27a, DK-5250 Odense SV, Denmark

Rod sealing set, Polon®

OD

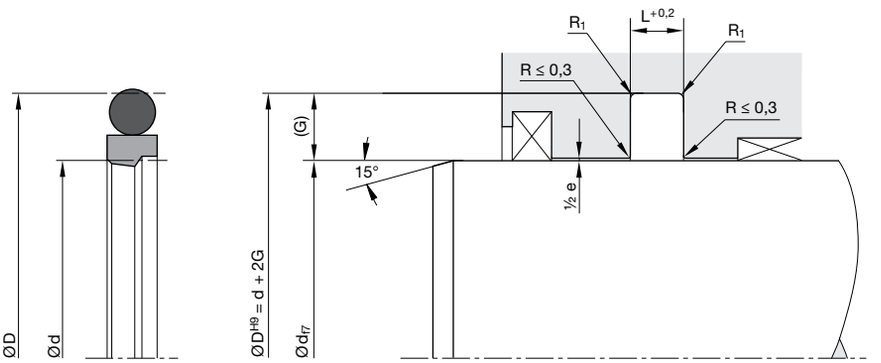

For surface finish, lead in chamfer and other installation dimensions see „General installation guidelines“.

Housing dimensions

Series no.	Cross-section	O-ring cross-section (mm)	Recommended Ø range d (mm) ≥	<	Groove width L (mm)	Groove depth G (mm)	Gap max. 0200 bar e (mm)	Gap max. 200400 bar e (mm)	Radius max. R_1 (mm)	ISO[1)]
00170	A	1.78	4	8	2.2	2.45	0.6 - 0.4	0.4 - 0.2	0.5	
00170	B	2.62	8	19	3.2	3.65	0.8 - 0.5	0.5 - 0.3	0.5	
00170	C	3.53	19	38	4.2	5.35	0.8 - 0.5	0.5 - 0.3	0.5	
00170	D	5.33	38	200	6.3	7.55	1 - 0.6	0.6 - 0.4	0.9	
00170	E	6.99	200	256	8.1	10.25	1 - 0.6	0.6 - 0.4	0.9	
00170	F	6.99	256	650	8.1	12	1.2 - 0.7	0.7 - 0.5	0.9	
00170	G	8.4	650	1000	9.5	13.65	1.4 - 0.8	0.8 - 0.6	0.9	
00170	H	12	1000	-	13.8	19	1.4 - 0.8	0.8 - 0.6	0.9	
00170	K	1.78	4	8	2.2	2.5	0.6 - 0.4	0.4 - 0.2	0.5	•
00170	L	2.62	8	19	3.2	3.75	0.8 - 0.5	0.5 - 0.3	0.5	•
00170	M	3.53	19	38	4.2	5.5	0.8 - 0.5	0.5 - 0.3	0.5	•
00170	N	5.33	38	200	6.3	7.75	1 - 0.6	0.6 - 0.4	0.9	•
00170	O	6.99	200	256	8.1	10.5	1 - 0.6	0.6 - 0.4	0.9	•
00170	P	6.99	256	650	8.1	12.25	1.2 - 0.7	0.7 - 0.5	0.9	•

1) Housing dimensions according to ISO 7425-2

Tel: +45 63 12 83 00 | Email: ps@hymatik.com | www.hymatik.com | Hvidkaervej 27a, DK-5250 Odense SV, Denmark

Rod sealing set, Polon®

OD

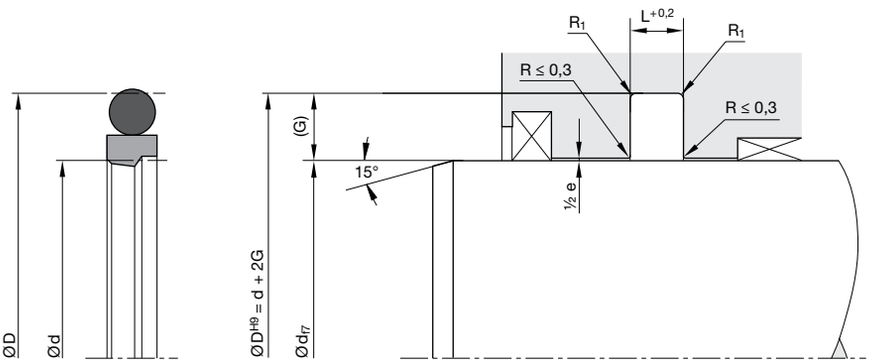

For surface finish, lead in chamfer and other installation dimensions see „General installation guidelines“.

Ordering example

Rod diameter 40 mm

OD 0400 052 00171 D (40,0 × 55,1 × 6,3)

OD	Profile			
0400	Rod diameter × 10			
052	Compound			
00171	Series no. / compound code O-ring			
	00170	without O-ring		
	00171	N0674 (NBR)	$70^{\pm5}$ Shore A	-30 / +110 °C
	00172	V0747 (FKM)	$75^{\pm5}$ Shore A	-25 / +200 °C
	00173	N0756 (NBR)	$75^{\pm5}$ Shore A	-50 / +110 °C
	00174	E0540 (EPDM)	$80^{\pm5}$ Shore A	-40 / +150°C
	00175	N3578 (NBR)	$75^{\pm5}$ Shore A	-30 / +110 °C
	00176	N0552 (NBR)	$90^{\pm5}$ Shore A	-30 / +100 °C
	00177	N1173 (HNBR)	$70^{\pm5}$ Shore A	-30 / +150 °C
D	Cross-section			

Please note:
For certain applications, it might be convenient to use a non-standard cross-section reduced or heavier. In these cases, please replace the standard cross-section code (in above example: „D“) by the one you require (for example „C“ or „E“).

Tel: +45 63 12 83 00 | Email: ps@hymatik.com | www.hymatik.com | Hvidkaervej 27a, DK-5250 Odense SV, Denmark

Rod sealing set, Polon®

OD

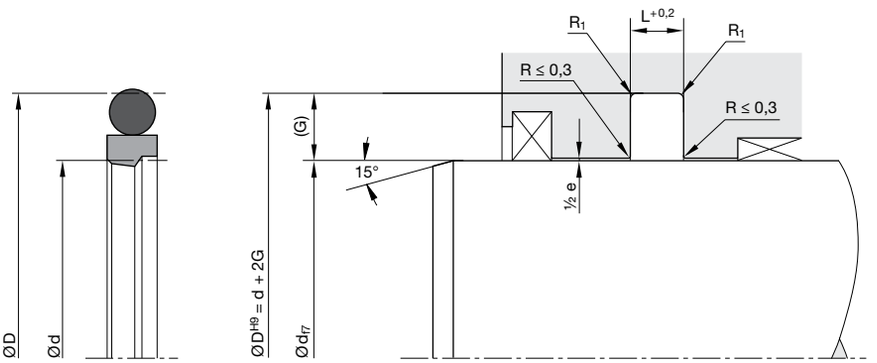

For surface finish, lead in chamfer and other installation dimensions see „General installation guidelines“.

Standard range

Size	Groove			O-ring			ISO[1)]
	Ø d (mm)	Ø D (mm)	L (mm)	No.	CS (mm)	ID (mm)	
0040	4	8.90	2.20	2-010	1.78	6.07	
0050	5	9.90	2.20	2-010	1.78	6.07	
0060	6	11	2.20	2-011	1.78	7.65	•
0070	7	11.90	2.20	2-012	1.78	9.25	
0080	8	13	2.20	2-012	1.78	9.25	•
0080	8	15.30	3.20	2-111	2.62	10.77	
0100	10	15	2.20	2-013	1.78	10.82	•
0100	10	17.30	3.20	2-112	2.62	12.37	
0120	12	17	2.20	2-015	1.78	14	•
0120	12	19.30	3.20	2-114	2.62	15.54	
0120	12	19.50	3.20	2-114	2.62	15.54	•
0140	14	19	2.20	2-016	1.78	15.60	•
0140	14	21.50	3.20	2-115	2.62	17.12	•
0150	15	22.30	3.20	2-116	2.62	18.72	
0160	16	23.50	3.20	2-116	2.62	18.72	•
0180	18	25.30	3.20	2-117	2.62	20.29	
0180	18	25.50	3.20	2-117	2.62	20.29	•
0200	20	27.50	3.20	2-118	2.62	21.89	•
0200	20	30.70	4.20	2-214	3.53	24.99	
0200	20	31	4.20	2-214	3.53	24.99	•
0220	22	29.50	3.20	2-120	2.62	25.07	•
0220	22	32.70	4.20	2-215	3.53	26.57	
0220	22	33	4.20	2-215	3.53	26.57	•
0250	25	32.50	3.20	2-122	2.62	26.24	•
0250	25	35.70	4.20	2-217	3.53	29.32	
0250	25	36	4.20	2-217	3.53	29.32	•
0260	26	36.70	4.20	2-218	3.53	31.34	

Size	Groove			O-ring			ISO[1)]
	Ø d (mm)	Ø D (mm)	L (mm)	No.	CS (mm)	ID (mm)	
0280	28	38.70	4.20	2-219	3.53	32.92	
0280	28	39	4.20	2-219	3.53	32.92	•
0300	30	40.70	4.20	2-220	3.53	34.52	
0320	32	42.70	4.20	2-221	3.53	36.09	
0320	32	43	4.20	2-221	3.53	36.09	•
0350	35	45.70	4.20	2-222	3.53	37.69	
0360	36	47	4.20	2-223	3.53	40.87	•
0380	38	53.10	6.30	2-327	5.33	43.82	
0400	40	51	4.20	2-224	3.53	44.04	•
0400	40	55.10	6.30	2-328	5.33	46.99	
0420	42	57.10	6.30	2-328	5.33	46.99	
0450	45	56	4.20	2-226	3.53	50.39	•
0450	45	60.10	6.30	2-329	5.33	50.17	
0480	48	63.10	6.30	2-330	5.33	53.34	
0500	50	61	4.20	2-227	3.53	53.57	•
0500	50	65.10	6.30	2-331	5.33	56.52	
0520	52	67.10	6.30	2-331	5.33	56.52	
0550	55	70.10	6.30	2-332	5.33	59.69	
0560	56	67	4.20	2-229	3.53	59.92	•
0560	56	71.50	6.30	2-332	5.33	59.69	•
0580	58	73.10	6.30	2-333	5.33	62.87	
0600	60	75.10	6.30	2-334	5.33	66.04	
0630	63	74	4.20	2-231	3.53	66.27	•
0630	63	78.50	6.30	2-335	5.33	69.22	•
0650	65	80.10	6.30	2-335	5.33	69.22	
0700	70	85.10	6.30	2-337	5.33	75.57	
0700	70	85.50	6.30	2-337	5.33	75.57	•

1) ISO 7425-2
Further sizes on request.

Tel: +45 63 12 83 00 | Email: ps@hymatik.com | www.hymatik.com | Hvidkaervej 27a, DK-5250 Odense SV, Denmark

Rod sealing set, Polon®

OD

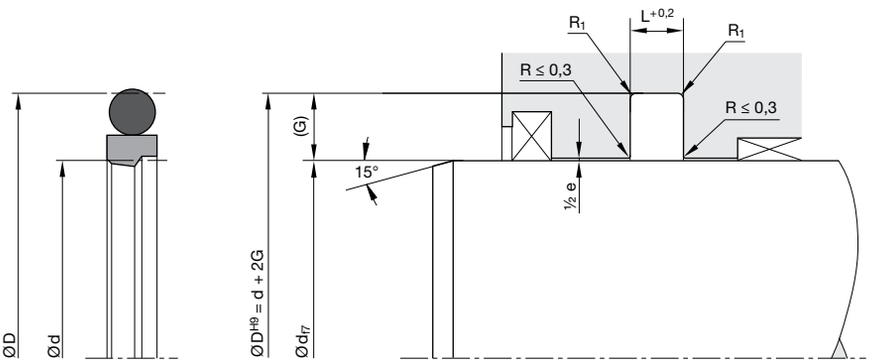

For surface finish, lead in chamfer and other installation dimensions see „General installation guidelines“.

Standard range

Size	Groove				O-ring		ISO[1]
	Ø d (mm)	Ø D (mm)	L (mm)	No.	CS (mm)	ID (mm)	
0750	75	90.10	6.30	2-339	5.33	81.92	
0800	80	95.10	6.30	2-340	5.33	85.09	
0800	80	95.50	6.30	2-340	5.33	85.09	•
0850	85	100.10	6.30	2-342	5.33	91.44	
0900	90	105.10	6.30	2-343	5.33	94.62	
0900	90	105.50	6.30	2-343	5.33	94.62	•
0950	95	110.10	6.30	2-345	5.33	100.97	
1000	100	115.10	6.30	2-346	5.33	104.14	
1000	100	115.50	6.30	2-346	5.33	104.14	•
1100	110	125.10	6.30	2-350	5.33	116.84	
1100	110	125.50	6.30	2-350	5.33	116.84	•
1200	120	135.10	6.30	2-353	5.33	126.37	
1250	125	140.10	6.30	2-354	5.33	129.54	
1250	125	140.50	6.30	2-354	5.33	129.54	•
1300	130	145.10	6.30	2-356	5.33	135.89	
1400	140	155.10	6.30	2-359	5.33	145.42	
1400	140	155.50	6.30	2-359	5.33	145.42	•
1500	150	165.10	6.30	2-361	5.33	151.77	
1600	160	175.10	6.30	2-363	5.33	164.47	
1600	160	175.50	6.30	2-363	5.33	164.47	•
1600	160	181	8.10	2-439	6.99	164.47	•
1700	170	185.10	6.30	2-365	5.33	177.17	
1750	175	190.10	6.30	2-365	5.33	177.17	
1800	180	195.10	6.30	2-366	5.33	183.52	
1800	180	195.50	6.30	2-366	5.33	183.52	•
1800	180	201	8.10	2-442	6.99	183.52	•
1850	185	200.10	6.30	2-367	5.33	189.87	
1900	190	205.10	6.30	2-368	5.33	196.22	

Size	Groove				O-ring		ISO[1]
	Ø d (mm)	Ø D (mm)	L (mm)	No.	CS (mm)	ID (mm)	
1950	195	210.10	6.30	2-368	5.33	196.22	
2000	200	220.50	8.10	2-445	6.99	202.57	
2000	200	221	8.10	2-445	6.99	202.57	•
2100	210	230.50	8.10	2-446	6.99	215.27	
2200	220	240.50	8.10	2-447	6.99	227.97	
2200	220	241	8.10	2-447	6.99	227.97	•
2300	230	250.50	8.10	2-448	6.99	240.67	
2400	240	260.50	8.10	2-449	6.99	240.67	
2500	250	270.50	8.10	2-449	6.99	253.37	
2500	250	271	8.10	2-449	6.99	253.37	•
2600	260	284	8.10	2-450	6.99	266.07	
2700	270	294	8.10	2-451	6.99	278.77	
2800	280	304	8.10	2-452	6.99	291.47	
2800	280	304.50	8.10	2-452	6.99	291.47	•
2900	290	314	8.10	2-453	6.99	304.17	
3000	300	324	8.10	2-453	6.99	304.17	
3100	310	334	8.10	2-454	6.99	316.87	
3200	320	344	8.10	2-455	6.99	329.57	
3200	320	344.50	8.10	2-455	6.99	329.57	•
3300	330	354	8.10	2-456	6.99	342.27	
3400	340	364	8.10	2-457	6.99	354.97	
3500	350	374	8.10	2-457	6.99	354.97	
3600	360	384	8.10	2-458	6.99	367.67	
3600	360	384.50	8.10	2-458	6.99	367.67	•
3700	370	394	8.10	2-459	6.99	380.37	
3800	380	404	8.10	2-460	6.99	393.07	
3900	390	414	8.10	2-461	6.99	405.26	
4000	400	424	8.10	2-461	6.99	405.26	

1) ISO 7425-2
Further sizes on request.

Tel: +45 63 12 83 00 | Email: ps@hymatik.com | www.hymatik.com | Hvidkaervej 27a, DK-5250 Odense SV, Denmark

Rod sealing set, Polon®

OD

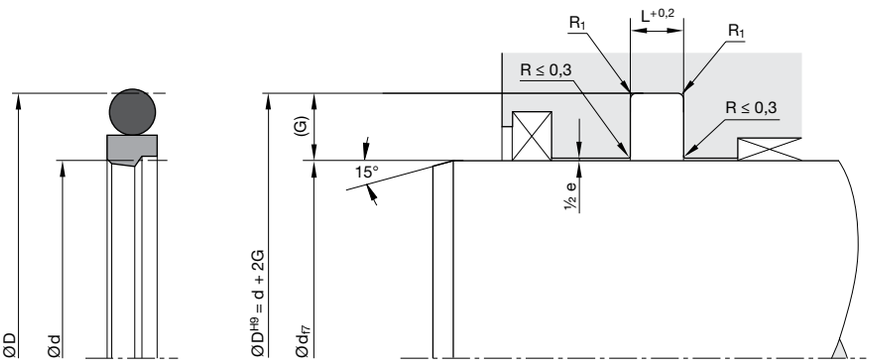

For surface finish, lead in chamfer and other installation dimensions see „General installation guidelines“.

Standard range

Size	Groove			O-ring			ISO[1)]
	Ø d (mm)	Ø D (mm)	L (mm)	No.	CS (mm)	ID (mm)	
4100	410	434	8.10	2-462	6.99	417.96	
4200	420	444	8.10	2-463	6.99	430.66	
4300	430	454	8.10	2-464	6.99	443.36	
4400	440	464	8.10	2-464	6.99	443.36	
4500	450	474	8.10	2-465	6.99	456.06	
4600	460	484	8.10	2-466	6.99	468.76	
4700	470	494	8.10	2-467	6.99	481.46	
4800	480	504	8.10	2-468	6.99	494.16	
4900	490	514	8.10	2-469	6.99	506.86	
5000	500	524	8.10	2-469	6.99	506.86	
5200	520	544	8.10	2-470	6.99	532.26	
5500	550	574	8.10	2-471	6.99	557.66	
5700	570	594	8.10	2-472	6.99	582.68	
6000	600	624	8.10	2-473	6.99	608.08	
6200	620	644	8.10	2-474	6.99	633.48	
6400	640	664	8.10	2-475	6.99	658.88	
6500	650	677.30	9.50	-	8.40	660.00	
7000	700	727.30	9.50	-	8.40	695.00	
8000	800	827.30	9.50	-	8.40	810.00	
9000	900	927.30	9.50	-	8.40	910.00	

1) ISO 7425-2
Further sizes on request.

Tel: +45 63 12 83 00 | Email: ps@hymatik.com | www.hymatik.com | Hvidkaervej 27a, DK-5250 Odense SV, Denmark

Rod seal

BD



The BD Ultrathan® rod seal is a compact seal with a secondary sealing lip and an evolution of Parker s Park-O-Pak® seal. The additional sealing edge results in a larger lubricant deposit in the sealing gap. This largely prevents increased wear and achieves longer service life. In addition, the need for a complex tandem arrangement may be eliminated by the second sealing lip in some cases.
Hydraulic cylinders in earth-moving machines are typical applications for this seal. They may involve pressure peaks of up to 1000 bar.

- Exceptionally high static and dynamic sealing performance.
- Enhanced sealing performance in non-pressurized conditions.
- Penetration of air into the system is largely prevented.
- Robust seal profile for harshest operating conditions.
- Extreme wear resistance.
- Easier installation.
- Insensitive to extreme pressure peaks.
- Improved lubrication due to pressure medium deposit in the dynamic contact area.
- Extremely high extrusion resistance.
- Excellent media resistance in case of suitable compound selection.
- Suitable compounds available for special requirements of the chemical process industry.
- Suitable compounds available for special requirements of the food processing industry.
- Dimensions according to ISO 5597.
- Installation in closed and undercut housings.
- Low compression set.
- Additional sizes of machined products available on short notice.

Range of Application

Mainly for sealing piston rods and plungers in heavy-duty mobile and stationary hydraulic applications.

Operating pressure	≤ 500 bar
Pressure peaks	≤ 1000 bar
Operating temperature	-35 °C to +110 °C
Sliding speed	≤ 0.5 m/s
Media	Hydraulic oils based on mineral oil

Compounds

The compound Ultrathan® P5008 is a Parker standard material based on polyurethane with a Shore A hardness of approx. 93. Its main advantages in comparison with other polyurethane materials currently available on the market are the increased heat resistance and a better wear resistence.
NBR-O-ring with approx. 70 Shore A.
Back-up ring made of filled polyamide (W5059).

Installation

The seals should have an axial clearance (see columns H and L). To avoid damage at the sealing lips, the seals should not be pulled over sharp edges during installation.
Normally these seals may be snapped into closed grooves. Where access is restricted special assembly tools may be required. Proposals for the design of such tools will be provided on request. For gap sizes see chapter “Maximum Gap Allowance”.

In case of special operating conditions (specific pressure loads, temperature, speed, use in water, HFA, HFB fluids etc.), please contact our consultancy service for a selection of the material and design best suiting your particular application requirements.

Tel: +45 63 12 83 00 | Email: ps@hymatik.com | www.hymatik.com | Hvidkaervej 27a, DK-5250 Odense SV, Denmark

Rod seal

BD

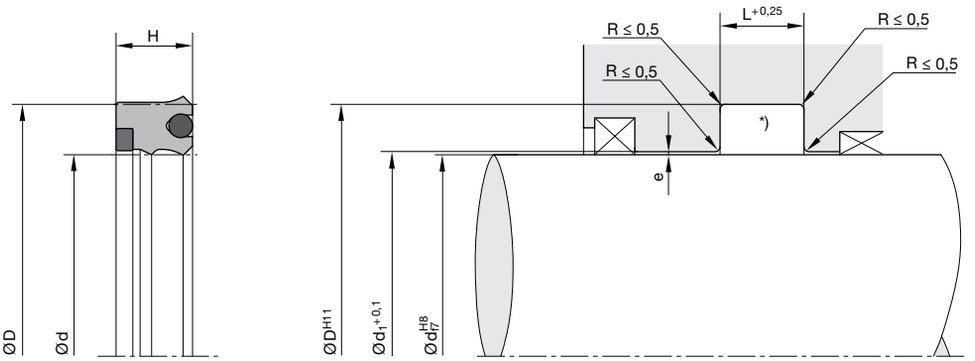

** In the case of designs according to ISO standard, the radii given there should be used.*
„e“ see chapter „Maximum gap allowance“.

For surface finish, lead in chamfer and other installation dimensions see „General installation guidelines“.

d	D	H	L	d_1	ISO[1)]	Order code
40	55	11.4	12.5	40.5	·	BD 0040 00042
50	65	11.4	12.5	50.5	·	BD 0050 00042
56	71	11.4	12.5	56.5		BD 0056 00042
60	75	11.4	12.5	60.5		BD 0060 00042
63	78	11.4	12.5	63.5		BD 0063 00042
65	80	11.4	12.5	65.5		BD 0065 00042
70	85	11.4	12.5	70.5	·	BD 0070 00042
75	90	11.4	12.5	75.5		BD 0075 00042
80	95	11.4	12.5	80.5	·	BD 0080 00042
85	100	11.4	12.5	85.5		BD 0085 00042
85	100	12	13	85.5		BD 0086 00042
90	105	11.4	12.5	90.5	·	BD 0090 00042
95	110	12	13	95.5		BD 0092 00042
100	115	12	13	100.5		BD 0095 00042
100	120	13.5	15	100.6		BD 0099 00042
100	120	14.5	16	100.6	·	BD 0100 00042
110	130	14.5	16	110.6	·	BD 0110 00042
120	140	14.5	16	120.6		BD 0120 00042
125	145	14.5	16	125.6	·	BD 0125 00042
130	150	14.5	16	130.6		BD 0130 00042
140	160	14.5	16	140.6	·	BD 0140 00042
150	170	14.5	16	150.6		BD 0150 00042
160	180	14.5	16	160.6		BD 0160 00042
170	190	14.5	16	170.6		BD 0170 00042
180	205	18.2	20	180.8	·	BD 0180 00042
190	215	18.2	20	190.8		BD 0190 00042
200	230	22.7	25	200.8	·	BD 0200 00042
220	250	22.7	25	220.8	·	BD 0220 00042
230	260	22.7	25	230.8		BD 0230 00042
240	270	22.7	25	240.8		BD 0240 00042

1) ISO 5597
Further sizes on request.

Tel: +45 63 12 83 00 | Email: ps@hymatik.com | www.hymatik.com | Hvidkaervej 27a, DK-5250 Odense SV, Denmark

Rod seal

BU



The BU Ultrathan® rod seal is a compact seal with an integrated anti-extrusion ring. It is frequently used as a buffer seal within sealing systems such as those utilized in construction machine cylinders. Construction machine cylinders operate in harsh conditions in which pressure peaks of up to 1000 bar frequently occur. The BU rod seal is installed upstream to isolate such loads from the secondary seal. Due to its special shape, the seal (like a return valve) is able to return pressure that may build up between the primary and the secondary seal into the system. A single or tandem arrangement of this product series is possible as well.

- Enhanced sealing performance in non-pressurized conditions.
- Robust seal profile for harshest operating conditions.
- Extreme wear resistance.
- Insensitive to extreme pressure peaks.
- Extremely high extrusion resistance.
- Excellent media resistance in case of suitable compound selection.
- Suitable compounds available for special requirements of the chemical process industry.
- Suitable compounds available for special requirements of the food processing industry.
- Dimensions according to ISO 5597.
- Dimensions according to ISO 7425-2.
- Short axial assembly length.
- Installation in closed and undercut housings.
- Additional sizes of machined products available on short notice.

Range of Application

Mainly used for sealing cylinders in mobile hydraulics.

Operating pressure	≤ 500 bar
Pressure peaks	≤ 1000 bar
Operating temperature	-35 °C to +110 °C
Sliding speed	≤ 0.5 m/s
Media	Hydraulic oils based on mineral oil

Compounds

The compound Ultrathan® P5008 is a Parker standard material based on polyurethane with a Shore A hardness of approx. 93. Its main advantages in comparison with other polyurethane materials currently available on the market are the increased heat resistance and a better wear resistence. Back-up ring compound: W5019

Installation

The seals should have an axial clearance (see columns H and L). To avoid damage at the sealing lips, the seals should not be pulled over sharp edges during installation.
Normally these seals may be snapped into closed grooves. Where access is restricted special assembly tools may be required. Proposals for the design of such tools will be provided on request. For gap sizes see chapter “Maximum Gap Allowance”.

In case of special operating conditions (specific pressure loads, temperature, speed, use in water, HFA, HFB fluids etc.), please contact our consultancy service for a selection of the material and design best suiting your particular application requirements.

Tel: +45 63 12 83 00 | Email: ps@hymatik.com | www.hymatik.com | Hvidkaervej 27a, DK-5250 Odense SV, Denmark

Rod seal

BU

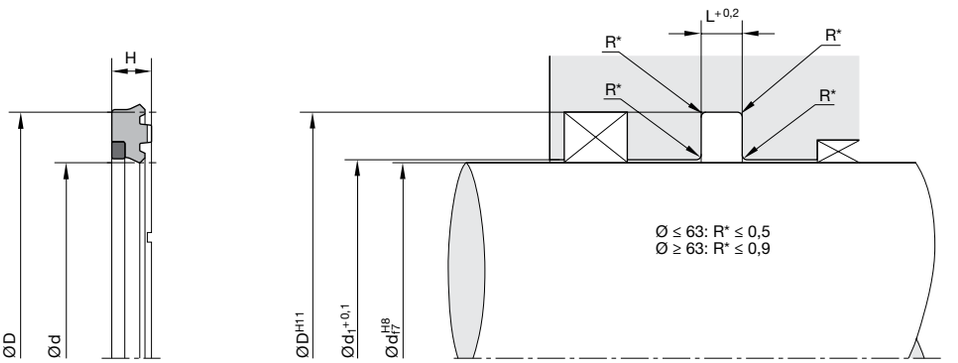

For surface finish, lead in chamfer and other installation dimensions see „General installation guidelines“.

d	D	H	L	d_1	ISO[1]	ISO[2]	Order code
56	71	8.5	9.5	56.5	·		BU 0056 00600
60	75	8.5	9.5	60.5			BU 0060 00600
60	75.1	6.1	6.3	60.5			BU 0061 00656
63	78.1	6.1	6.3	63.4			BU 0063 00656
65	80	8.5	9.5	65.4			BU 0065 00600
65	80.5	6.1	6.3	65.4		·	BU 0066 00656
70	85	8.5	9.5	70.5	·		BU 0070 00600
70	85.1	6.1	6.3	70.5			BU 0071 00656
75	90	8.5	9.5	75.5			BU 0075 00600
80	95	8.5	9.5	80.5	·		BU 0080 00600
80	95.1	6.1	6.3	80.5			BU 0084 00656
80	95.5	6.1	6.3	80.4		·	BU 0082 00656
85	100.5	6.1	6.3	85.4		·	BU 0085 00656
90	105	8.5	9.5	90.5	·		BU 0090 00600
90	105.5	6.1	6.3	90.4		·	BU 0091 00656
95	110.5	6.1	6.3	95.4		·	BU 0094 00656
100	115.5	6.1	6.3	100.4		·	BU 0104 00656
100	120	11.4	12.5	100.6	·		BU 0100 00600
110	125.5	6.1	6.3	110.4		·	BU 0118 00656
110	130	11.4	12.5	110.6	·		BU 0110 00600
120	140	11.4	12.5	120.6	·		BU 0120 00600
130	150	14.5	16	130.6			BU 0130 00600
140	160	14.5	16	140.6	·		BU 0140 00600
150	170	14.5	16	150.6	·		BU 0150 00600
160	180	14.5	16	160.6			BU 0160 00600
180	205	14.5	16	180.8	·		BU 0180 00600
200	225	14.5	16	200.8	·		BU 0200 00600
220	250	18.2	20	220.8	·		BU 0220 00600
250	280	18.2	20	250.8	·		BU 0250 00600
280	310	18.2	20	280.8			BU 0280 00657

1) Standard sizes for housings according to ISO 5597.
2) Standard sizes for housings according to ISO 7425-2.
Further sizes on request.

Tel: +45 63 12 83 00 | Email: ps@hymatik.com | www.hymatik.com | Hvidkaervej 27a, DK-5250 Odense SV, Denmark

Piston seals

Profile cross-section	Profile reference	Pressure max. (bar)	Page
Piston seals			
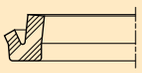	C2	160	100
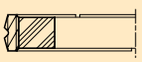	KR	300	103
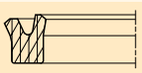	B7	400	105
	OE	400	108
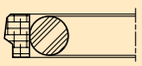	OG	400	113
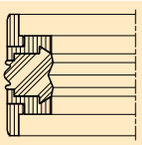	ZW	400	118
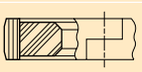	OK	800	121

Tel: +45 63 12 83 00 | Email: ps@hymatik.com | www.hymatik.com | Hvidkaervej 27a, DK-5250 Odense SV, Denmark

Piston seal

C2



The C2 piston seal meets the requirements of the manufacturers of hydraulic and pneumatic equipment for seals with the smallest possible housings. Although cross-sections and heights are very small the sealing performance is excellent. Extremely low friction is experienced because of the short contact to the sealing surface area. For installation in non-lubricated pneumatic systems (dry air) we recommend our profile E4 which fits into the same housings.

- Good wear resistance.
- Easier installation.
- Suitable for fully automatic installation.
- Assembly on one-part piston is possible.
- High temperature resistance in case of suitable compound selection.
- Excellent media resistance in case of suitable compound selection.
- Suitable compounds available for special requirements of the chemical process industry.
- Suitable compounds available for special requirements of the food processing industry.
- Installation in closed and undercut housings.

Range of Application

Particularly recommended for pistons in hydraulic and pneumatic cylinders.

Operating pressure	≤ 160 bar [1)]
Hydraulics	≤ 160 bar
Pneumatics	≤ 16 bar
Operating temperature	
Hydraulics	-25 °C to +100 °C
Pneumatics	-25 °C to +80 °C
Sliding speed	≤ 0.5 m/s

[1)] Dependent upon cross-section and compound.

Compounds

Standard: N3584, NBR compound (≈ 80 Shore A).
For low temperatures: N8613, NBR compound (≈ 80 Shore A).
For high temperatures: V3664, FKM compound (≈ 85 Shore A).

Installation

The profile C2 piston seals are manufactured undersized in relation to the nominal dimensions. Only after installation will the sealing lip diameter have the desired dimensions. This lip seal may easily be snapped into the grooves. Care should be taken that the seals are not pulled over sharp edges.
In the case of double-acting pistons, pressure peaks should be avoided. In such cases, sealing elements with larger cross-sections or other profiles with header rings should be used.

In case of special operating conditions (specific pressure loads, temperature, speed, use in water, HFA, HFB fluids etc.), please contact our consultancy service for a selection of the material and design best suiting your particular application requirements.

Tel: +45 63 12 83 00 | Email: ps@hymatik.com | www.hymatik.com | Hvidkaervej 27a, DK-5250 Odense SV, Denmark

Piston seal

C2

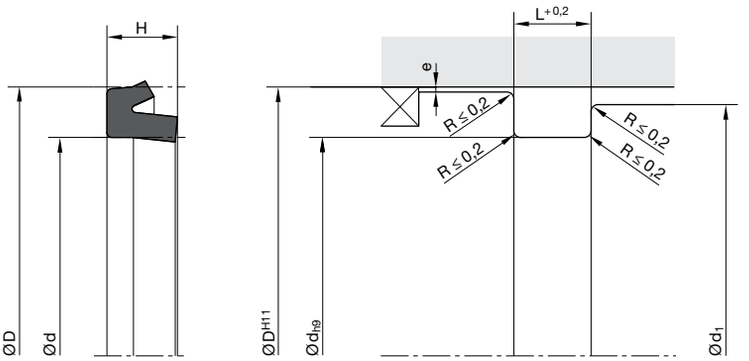

„e“ see chapter „Maximum gap allowance“.
d_1 = minimum piston diameter on pressure side.

For surface finish, lead in chamfer and other installation dimensions see „General installation guidelines“.

D	d	H	L	d_1	Order code
4	1.5	1.7	2	3	C2 0010 N3584
5	2	2.2	2.5	4	C2 0014 N3584
6	2.5	2	2.3	4.5	C2 0023 N3584
6	3	3	3.5	5	C2 0025 N3584
7.5	4	2	2.3	6	C2 0033 N3584
8	3	3.5	4	5.5	C2 0035 N3584
8	5	4	4.5	7	C2 0045 N3584
9.5	4.5	3.5	4	7	C2 0065 N3584
10	5	3.5	4	7.5	C2 1020 N3584
10	6	4.2	4.7	8	C2 1029 N3584
11	6	4	4.5	8.5	C2 1035 N3584
12	6	4	4.5	9	C2 1040 N3584
12	8	3	3.5	10	C2 1045 N3584
13	7	4	4.5	10	C2 1055 N3584
13.5	8	4	4.5	11	C2 1058 N3584
14	6	5.5	6	10	C2 1063 N3584
14	8	4	4.5	11	C2 1066 N3584
15	7	5.5	6	11	C2 1070 N3584
16	8	5.5	6	12	C2 1080 N3584
16	10	4	4.5	13	C2 1083 N3584
16	10	6	6.5	13	C2 1086 N3584
17.5	11.7	3	3.5	14.8	C2 1088 N3584
18	10	5.5	6	14	C2 1092 N3584
19.05	10.5	5.5	6	15	C2 1097 N3584
20	10	7	7.5	15	C2 2005 N3584
20	12	5.5	6	16	C2 2010 N3584
20	14	4.2	4.7	17	C2 2012 N3584
22	14	5.5	6	18	C2 2020 N3584
24	16	5.5	6	20	C2 2030 N3584
25	17	5.5	6	21	C2 2040 N3584
26	18	5.5	6	22	C2 2050 N3584
28	20	5.5	6	24	C2 2065 N3584
30	20	7	7.5	25	C2 3015 N3584
30	22	5.5	6	26	C2 3018 N3584

D	d	H	L	d_1	Order code
32	22	5	5.5	27	C2 3025 N3584
32	22	7	7.5	27	C2 3030 N3584
32	24	5.5	6	28	C2 3035 N3584
35	25	7	7.5	30	C2 3050 N3584
36	26	7	7.5	31	C2 3055 N3584
37	29	5.5	6	33	C2 3063 N3584
38	28	7	7.5	33	C2 3065 N3584
40	30	7	7.5	35	C2 4005 N3584
40	32	5.5	6	36	C2 4010 N3584
45	35	7	7.5	40	C2 4035 N3584
45	37	6	6.5	41	C2 4047 N3584
46	36	7	7.5	41	C2 4045 N3584
48	40	5.5	6	44	C2 4065 N3584
50	36	10	11	43	C2 5005 N3584
50	40	7	7.5	45	C2 5010 N3584
50	42	8	8.5	46	C2 5012 N3584
52	42	7	7.5	48	C2 5025 N3584
55	45	7	7.5	50	C2 5045 N3584
60	50	7	7.5	55	C2 6010 N3584
62	47	10	11	51.5	C2 6023 N3582
62	52	7	7.5	57	C2 6028 N3584
63	53	7	7.5	58	C2 6035 N3584
65	53	10	11	59	C2 6050 N3584
65	55	7	7.5	60	C2 6055 N3584
67	57	7	7.5	62	C2 6063 N3584
68	58	7	7.5	63	C2 6070 N3584
70	54	12	13	62	C2 7010 N3584
70	58	8.5	9.5	64	C2 7020 N3584
75	55	12	13	65	C2 7045 N3584
75	59	12	13	67	C2 7047 N3584
75	63	8.5	9.5	69	C2 7050 N3584
80	60	14	15	70	C2 8005 N3584
80	64	8	8.5	72	C2 8011 N3584
80	68	8.5	9.5	74	C2 8015 N3584

Further sizes on request.

Tel: +45 63 12 83 00 | Email: ps@hymatik.com | www.hymatik.com | Hvidkaervej 27a, DK-5250 Odense SV, Denmark

Piston seal

C2

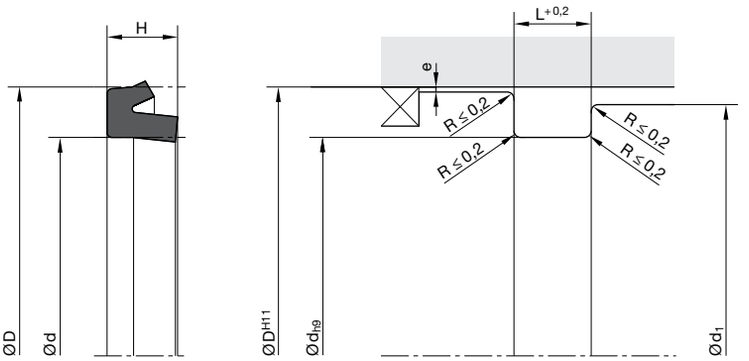

„e“ see chapter „Maximum gap allowance“.
d_1 = minimum piston diameter on pressure side.

For surface finish, lead in chamfer and other installation dimensions see „General installation guidelines“.

D	d	H	L	d_1	Order code
85	73	8.5	9.5	79	C2 8045 N3584
90	70	12	13	80	C2 9015 N3584
90	78	8.5	9.5	84	C2 9025 N3584
100	80	15	16	90	C2 A010 N3584
100	85	9.5	10.5	92.5	C2 A014 N3584
100	85	12	13	92.5	C2 A015 N3584
100	88	8.5	9.5	94	C2 A020 N3584
100	90	7	7.5	95	C2 A025 N3584
105	85	15	16	95	C2 A040 N3584
110	95	10	11	102.5	C2 B010 N3584
115	95	14	15	105	C2 B015 N3584
120	100	15	16	110	C2 C015 N3584
120	105	10	11	112.5	C2 C017 N3584
125	105	16	17	115	C2 C024 N3584
125	110	10	11	117.5	C2 C025 N3584
130	115	10	11	122.5	C2 D010 N3584
136	116	14	15	126	C2 D025 N3578
140	120	14	15	130	C2 E015 N3584
140	125	10	11	132.5	C2 E020 N3584
145	130	10	11	137.5	C2 E040 N3584
150	135	10	11	142.5	C2 F015 N3584
155	135	15	16	145	C2 F030 N3582
160	140	14	15	150	C2 G015 N3584
160	145	10	11	152.5	C2 G020 N3584
175	155	14	15	165	C2 H020 N3584
180	160	14	15	170	C2 J015 N3584
190	170	14	15	180	C2 K015 N3584
200	180	14	15	190	C2 L015 N3584
220	200	14	15	210	C2 M015 N3584
225	200	17.5	18.5	212.5	C2 M025 N3584
240	220	14	15	230	C2 N015 N3584
250	230	14	15	240	C2 N030 N3584
260	240	14	15	250	C2 O015 N3584
280	260	14	15	270	C2 P015 N3584
300	280	15	16	290	C2 Q010 N3584
315	290	17	18	302.5	C2 Q020 N3584
350	320	21	22	335	C2 Q030 N3584

Further sizes on request.

Tel: +45 63 12 83 00 | Email: ps@hymatik.com | www.hymatik.com | Hvidkaervej 27a, DK-5250 Odense SV, Denmark

Piston sealing set, Polon®

KR



The Ultrathan® piston sealing set KR complements the product range of double-acting piston seals (OE, OK) for grooves according to ISO 7425-1 by a product which is preferably used in the medium-duty pressure range up to a maximum of 300 bar. The sealing set stands out by its extreme wear resistance and exceptionally high static and dynamic sealing performance and can also be used for piston accumulators.
The KR sealing set consists of a polyurethane slide ring with improved sliding properties and particularly high modulus and an energizer with rectangular cross-section made of an NBR elastomer.

- Exceptionally high static and dynamic sealing performance.
- Good sealing performance in extremely small assembly conditions.
- Can also be used for single-acting applications.
- Robust seal profile for harshest operating conditions.
- Extreme wear resistance.
- Long service life thanks to application-optimized compounds.
- Constantly low dynamic friction throughout the part's service life.
- Easy snap assembly on a single-part piston.
- Insensitive to pressure peaks.
- Functional reliability at critical temperatures.
- High extrusion resistance.
- Dimensions according to ISO 7425-1.
- Short axial assembly length.
- Installation in closed and undercut housings.

Range of Application

The KR piston sealing set is suitable for use in all standard industrial cylinders, farming equipment, light construction machinery and mobile devices. Due to its exceptionally high dynamic sealing performance, it is particularly well suited for leakage-critical applications.

Operating pressure	≤ 300 bar
Operating temperature	-35 °C to +110 °C
Sliding speed	≤ 0.5 m/s

Compounds

Slide ring: Ultrathan® P5062, modified polyurethane with a hardness of approximately 55 Shore D.
Expander ring: NB078, NBR-elastomer with a hardness of approximately 80 Shore A.

Installation

The installation groove must be carefully deburred and cleaned. The cylinder bore must have a leading edge chamfer. Profile KR can be snapped into closed grooves.

In case of special operating conditions (specific pressure loads, temperature, speed, use in water, HFA, HFB fluids etc.), please contact our consultancy service for a selection of the material and design best suiting your particular application requirements.

Tel: +45 63 12 83 00 | Email: ps@hymatik.com | www.hymatik.com | Hvidkaervej 27a, DK-5250 Odense SV, Denmark

Piston sealing set, Polon®

KR

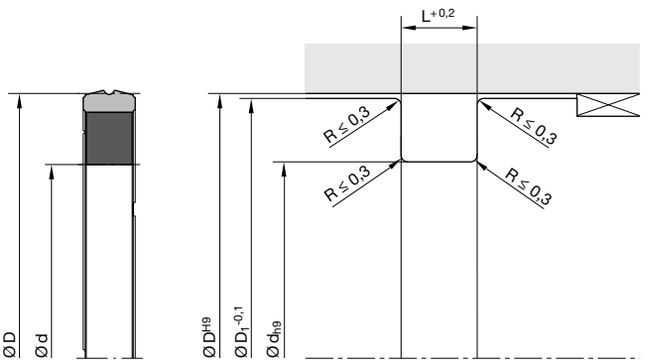

For surface finish, lead in chamfer and other installation dimensions see „General installation guidelines“.

D	d	L	D_1	ISO[1)]	Order code
20	12.5	3.2	19.7		KR 0020 00701
25	16	4.2	24.7		KR 2025 00701
25	17.5	3.2	24.7		KR 0025 00701
32	21	4.2	31.7	·	KR 1032 00701
32	24.5	3.2	31.7	·	KR 0032 00701
40	29	4.2	39.7	·	KR 0040 00701
40	32.5	3.2	39.7	·	KR 3040 00701
45	32	6.3	44.6		KR 1045 00701
45	34	4.2	44.7		KR 0045 00701
50	34.5	6.3	49.6	·	KR 1050 00701
50	39	4.2	49.7	·	KR 0050 00701
55	39.5	6.3	54.6		KR 1055 00701
60	44.5	6.3	59.6		KR 1060 00701
60	49	4.2	59.7		KR 0060 00701
63	47.5	6.3	62.6	·	KR 2063 00701
63	50	6.3	62.6		KR 3063 00701
63	52	4.2	63.7	·	KR 0063 00701
65	52	6.3	64.6		KR 0065 00701
70	54.5	6.3	69.6		KR 1070 00701
70	57	6.3	69.6		KR 2070 00701
70	59	4.2	69.7		KR 0070 00701
75	59.5	6.3	74.6		KR 0075 00701
75	62	6.3	74.6		KR 2075 00701
80	64.5	6.3	79.6	·	KR 0080 00701
80	66.5	6.3	79.6		KR 1080 00701
80	69	4.2	79.7	·	KR 4080 00701
85	69.5	6.3	84.7		KR 1085 00701*
85	71.5	6.3	84.6		KR 0085 00701
90	69	10.5	89.5		KR 2090 00701
90	74.5	6.3	89.6		KR 0090 00701
95	79.5	6.3	94.6		KR 0095 00701
100	79	8.1	99.5		KR 2100 00701
100	84.5	6.3	99.6	·	KR 0100 00701
100	86.5	6.3	99.6		KR 1100 00701
105	89.5	6.3	104.6		KR 0105 00701
110	89	8.1	109.5		KR 1110 00701
115	94	8.1	114.5		KR 0115 00701
120	99	8.1	119.5		KR 2120 00701
120	99	10.5	119.5		KR 1120 00701
125	104	8.1	124.5	·	KR 1125 00701
125	104	10.5	124.5		KR 2125 00701
125	109.5	6.3	124.6	·	KR 0125 00701
140	119	8.1	139.5		KR 2140 00701
160	139	8.1	159.5	·	KR 0160 00701
180	159	8.1	179.5		KR 0180 00701*
200	179	8.1	199.5	·	KR 0200 00701

1) ISO 7425-1
* Moulds not available on the date of printing.
Further sizes on request.

Tel: +45 63 12 83 00 | Email: ps@hymatik.com | www.hymatik.com | Hvidkaervej 27a, DK-5250 Odense SV, Denmark

Piston seal

B7



The B7 Ultrathan® piston seal is a lip seal with interference fit. It is extremely wear resistant, ensures reliable load holding and is suitable for hydraulic high-pressure applications.

- Robust seal profile for harshest operating conditions.
- Extreme wear resistance.
- Easier installation.
- Suitable for fully automatic installation.
- Assembly on one-part piston is possible.
- Insensitive to pressure peaks.
- High extrusion resistance.
- Excellent media resistance in case of suitable compound selection.
- Suitable compounds available for special requirements of the chemical process industry.
- Suitable compounds available for special requirements of the food processing industry.
- Dimensions according to ISO 5597.
- Installation in closed and undercut housings.
- Additional sizes of machined products available on short notice.

Range of Application

Mainly for the sealing of pistons in heavy duty applications in mobile and stationary hydraulics.

Operating pressure	≤ 400 bar
Operating temperature	-35 °C to +110 °C
Sliding speed	≤ 0.5 m/s
Media	Hydraulic oils based on mineral oil

Compounds

The compound Ultrathan® P5008 is a Parker standard material based on polyurethane with a Shore A hardness of approx. 93. Its main advantages in comparison with other polyurethane materials currently available on the market are the increased heat resistance and a better wear resistence. For low temperatures, the material Ultrathan® P5009 is recommended. For media containing water, we recommend our hydrolysis-resistant polyurethane compound P5001.

Installation

The seals should have an axial clearance (see columns H and L). To avoid damage at the sealing lips, the seals should not be pulled over sharp edges during installation.
Normally these seals may be snapped into closed grooves. Where access is restricted special assembly tools may be required. Proposals for the design of such tools will be provided on request.

In case of special operating conditions (specific pressure loads, temperature, speed, use in water, HFA, HFB fluids etc.), please contact our consultancy service for a selection of the material and design best suiting your particular application requirements.

Tel: +45 63 12 83 00 | Email: ps@hymatik.com | www.hymatik.com | Hvidkaervej 27a, DK-5250 Odense SV, Denmark

Piston seal

B7

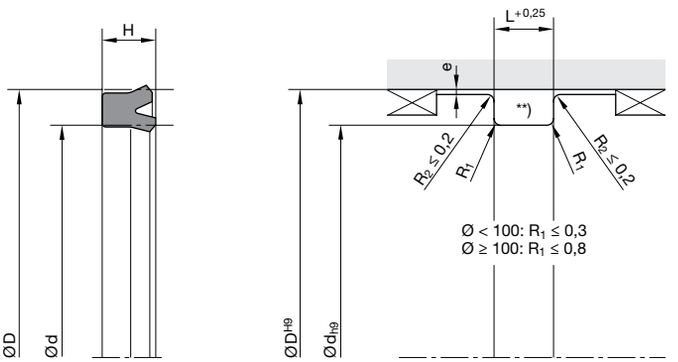

*** In the case of designs according to ISO standard, the radii given there should be used.*
„e“ see chapter „Maximum gap allowance“.

For surface finish, lead in chamfer and other installation dimensions see „General installation guidelines“.

D	d	H	L	ISO[1]	ISO[2]	Order code
16	8	5.7	6.3		·	B7 1608 P5008
16	10	5.7	6.3			B7 1610 P5008
20	12	4.2	4.7			B7 2011 P5008
20	12	5.7	6.3		·	B7 2012 P5008
22	12	8	9			B7 2212 P5008
24	16	5.7	6.3			B7 2416 P5008
25	15	7.3	8		·	B7 2015 P5008
25	17	4.5	5		·	B7 2516 P5008
25	17	5.7	6.3		·	B7 2517 P5008
25	18	5	5.6	·		B7 2520 P5008
28	20	7	8			B7 2810 P5008
32	22	7.3	8		·	B7 3222 P5008
32	24	5.7	6.3		·	B7 3224 P5008
32	25	5	5.6	·		B7 3226 P5008
34	22	8.5	9.5			B7 3422 P5008
35	25	6	6.8			B7 3524 P5008
35	25	7.3	8			B7 3525 P5008
38.1	30.1	5.7	6.3			B7 3810 P5008
40	30	7.3	8		·	B7 4030 P5008
40	30	10	11			B7 4031 P5008
40	32	5.7	6.3	·	·	B7 4032 P5008
40	33	8	9			B7 4033 P5008
43	33	7.3	8			B7 4304 P5008
45	35	7.3	8			B7 4535 P5008
50	35	10	11			B7 5010 P5008
50	40	7.3	8		·	B7 5040 P5008
50	40	10	11			B7 5041 P5008
50	42	5.7	6.3	·		B7 5016 P5008
50.8	41.17	6.2	7			B7 5043 P5008
52	42	7.3	8			B7 5209 P5008
54	44	7.3	8			B7 5409 P5008
55	45	7.3	8			B7 5545 P5008
60	50	7.3	8			B7 6050 P5008
60	50	10	11			B7 6009 P5008

D	d	H	L	ISO[1]	ISO[2]	Order code
63	48	8.6	9.5		·	B7 6032 P5008
63	48	11.4	12.5		·	B7 6348 P5008
63	53	7.3	8		·	B7 6353 P5008
63	55	5.7	6.3	·		B7 6355 P5008
65	55	7.3	8			B7 6055 P5008
68	58	9.5	10.5			B7 6805 P5008
70	60	7.5	8.2			B7 7011 P5008
70	60	12	13			B7 7012 P5008
75	63	8.7	9.5			B7 7027 P5008
80	60	14.5	16		·	B7 8060 P5008
80	65	8.6	9.5		·	B7 8008 P5008
80	65	11.4	12.5		·	B7 8065 P5008
80	70	6.7	7.5	·		B7 8010 P5008
80	70	12	13			B7 8011 P5008
90	75	11.4	12.5			B7 9075 P5008
95	80	11.4	12.5			B7 9580 P5008
100	80	14.5	16		·	B7 A080 P5008
100	85	11.4	12.5		·	B7 A085 P5008
100	90	6.7	7.5	·		B7 A090 P5008
110	90	8	9			B7 B008 P5008
110	90	15	16.5			B7 B004 P5008
115	98	14.5	16			B7 B050 P5008
120	105	11.4	12.5			B7 C120 P5008
121	111.1	9.5	10.5			B7 C050 P5008
125	100	18.2	20		·	B7 C210 P5008
125	105	14.5	16		·	B7 C215 P5008
125	110	9.6	10.6	·		B7 C219 P5008
145	115	18	20			B7 E050 P5008
152.4	136.5	10	11			B7 F024 P5008
160	135	18.2	20		·	B7 G035 P5008
160	140	14.5	16		·	B7 G040 P5008
180	150	18	20			B7 J004 P5008
200	170	22.7	25		·	B7 L007 P5008
200	175	18.2	20		·	B7 L010 P5008

1) For housings according to ISO 5597 for ISO 6020-2 cylinders.
2) Standard sizes for housings according to ISO 5597.
Further sizes on request.

Tel: +45 63 12 83 00 | Email: ps@hymatik.com | www.hymatik.com | Hvidkaervej 27a, DK-5250 Odense SV, Denmark

Piston seal

B7

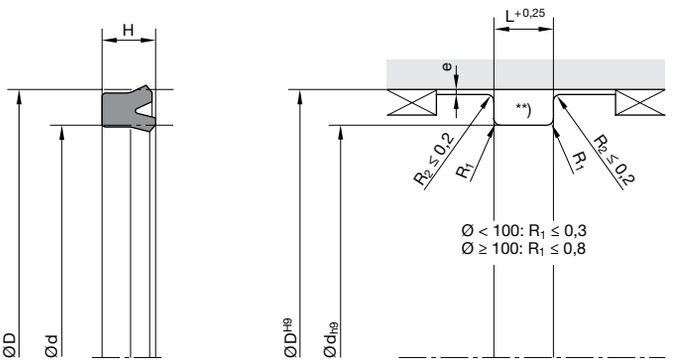

*** In the case of designs according to ISO standard, the radii given there should be used.*
„e“ see chapter „Maximum gap allowance“.

For surface finish, lead in chamfer and other installation dimensions see „General installation guidelines“.

D	d	H	L	ISO[1)]	ISO[2)]	Order code
200	185	9.6	10.6	·		B7 L013 P5008
220	200	15	16.5			B7 M020 P5008
240	215	15	16.5			B7 N010 P5008
250	220	22.7	25		·	B7 N120 P5008
250	225	18.2	20		·	B7 N125 P5008
250	230	15	16.5			B7 N130 P5008
320	290	20	22		·	B7 Q210 P5008

1) For housings according to ISO 5597 for ISO 6020-2 cylinders.
2) Standard sizes for housings according to ISO 5597.
Further sizes on request.

Tel: +45 63 12 83 00 | Email: ps@hymatik.com | www.hymatik.com | Hvidkaervej 27a, DK-5250 Odense SV, Denmark

Slipper Seal® Piston sealing set OG, Polon® OE



The double-acting OE piston sealing set featuring a Slipper Seal® design consists of a PTFE piston sealing ring and an elastomer O-ring as a preloading element. The seal design is intended for hydraulic applications. The symmetrical cross section of the sealing ring is designed for uniform return of drag oil during the stroke in both directions. The OE sealing set is particularly well suited for double-acting pistons in control cylinders, servo-controlled systems, machine tools and quick-acting cylinders.
Due to the material combination of the slide ring (PTFE) and O-ring (elastomer), this product is suitable for a wide range of applications, especially for aggressive media and/or high temperatures. For hydraulic applications, the piston sealing ring is preferably made from a bronze-filled PTFE compound in order to avoid reliable extrusion resistance. Alternatively, several compounds can be selected, depending on the specific applications profile.

- Good sealing performance in extremely small assembly conditions.
- Can also be used for single-acting applications.
- Excellent wear resistance.
- Minimal break-away and dynamic friction and no stick-slip tendency ensures uniform motion even at low speeds.
- Good energy efficiency due to low friction.
- Assembly on one-part piston is possible.
- Insensitive to pressure peaks.
- High temperature resistance assured by suitable O-ring compound selection.
- High extrusion resistance.
- Adaptable to nearly all media thanks to high chemical resistance of the sealing ring and large O-ring compound selection.
- Dimensions according to ISO 7425-1.
- Short axial assembly length.
- Installation in closed and undercut housings.
- Available in diameters from 4 to 4500 mm.
- Additional sizes of machined products available on short notice.

Range of Application

High pressure applications.

Operating pressure	≤ 400 bar
in case of reduced extrusion gap (H7/f7) and large cross sections	≤ 600 bar
Operating temperature	-30 °C to +100 °C [1)]
Sliding speed	≤ 4 m/s

[1)] With deviation from standard temperature range, please contact our consultancy service for adequate O-ring compound.

Compounds

Sealing ring: Polon® 052, PTFE + 40 % bronze.
O-ring: N0674, NBR elastomer with approx. 70 Shore A.

Installation

This seal should only be used in combination with guiding elements (e.g. F3).

In case of special operating conditions (specific pressure loads, temperature, speed, use in water, HFA, HFB fluids etc.), please contact our consultancy service for a selection of the material and design best suiting your particular application requirements.

Tel: +45 63 12 83 00 | Email: ps@hymatik.com | www.hymatik.com | Hvidkaervej 27a, DK-5250 Odense SV, Denmark

Slipper Seal® Piston sealing set OG, Polon® OE

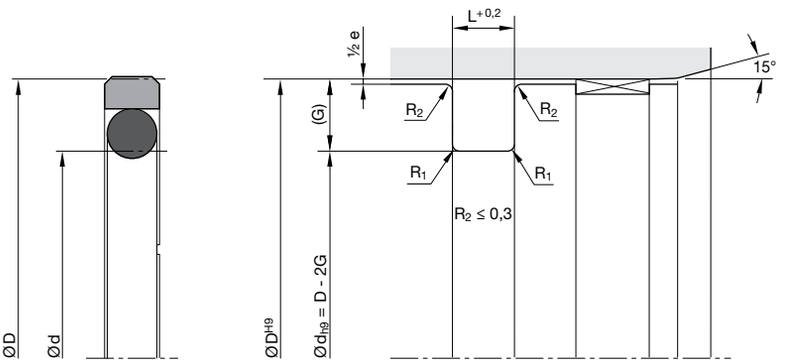

For surface finish, lead in chamfer and other installation dimensions see „General installation guidelines“.

Housing dimensions

Series no.	Cross-section	O-ring cross-section (mm)	Recommended piston Ø range D (mm) ≥	D (mm) <	Groove width L (mm)	Groove depth G (mm)	Gap max. 0200 bar e (mm)	Gap max. 200400 bar e (mm)	Radius max. R_1 (mm)	ISO[1)]
00210	A	1.78	8	15	2.2	2.45	0.6 - 0.4	0.4 - 0.2	0.5	
00210	B	2.62	15	40	3.2	3.65	0.8 - 0.5	0.5 - 0.3	0.5	
00210	C	3.53	40	80	4.2	5.35	0.8 - 0.5	0.5 - 0.3	0.5	
00210	D	5.33	80	133	6.3	7.55	1 - 0.6	0.6 - 0.4	0.9	
00210	E	6.99	133	330	8.1	10.25	1 - 0.6	0.6 - 0.4	0.9	
00210	F	6.99	330	670	8.1	12.0	1.2 - 0.7	0.7 - 0.5	0.9	
00210	G	8.4	670	1000	9.5	13.65	1.4 - 0.8	0.8 - 0.6	0.9	
00210	H	12	1000	-	13.8	19.0	1.4 - 0.8	0.8 - 0.6	0.9	
00210	K	1.78	8	15	2.2	2.5	0.6 - 0.4	0.4 - 0.2	0.5	•
00210	L	2.62	15	40	3.2	3.75	0.8 - 0.5	0.5 - 0.3	0.5	•
00210	M	3.53	40	80	4.2	5.5	0.8 - 0.5	0.5 - 0.3	0.5	•
00210	N	3.53	40	80	5.0	5.0	0.8 - 0.5	0.5 - 0.3	0.5	•
00210	O	5.33	80	133	6.3	7.75	1 - 0.6	0.6 - 0.4	0.9	•
00210	P	5.33	80	133	7.5	7.5	1 - 0.6	0.6 - 0.4	0.9	•
00210	Q	6.99	133	330	8.1	10.5	1 - 0.6	0.6 - 0.4	0.9	•
00210	R	6.99	330	670	8.1	12.25	1.2 - 0.7	0.7 - 0.5	0.9	•
00210	S	6.99	133	330	10.0	10.0	1.2 - 0.7	0.7 - 0.5	0.9	•
00210	T	6.99	330	670	12.5	12.5	1.2 - 0.7	0.7 - 0.5	0.9	•
00210	U	10.0	670	1000	12.5	15.0	1.4 - 0.8	0.8 - 0.6	0.9	•
00210	V	10.0	670	1000	15.0	15.0	1.4 - 0.8	0.8 - 0.6	0.9	•
00210	W	14.0	1000	-	20.0	20.0	1.4 - 0.8	0.8 - 0.6	0.9	•

1) Housing dimensions according to ISO 7425-1

Tel: +45 63 12 83 00 | Email: ps@hymatik.com | www.hymatik.com | Hvidkaervej 27a, DK-5250 Odense SV, Denmark

Slipper Seal® Piston sealing set, Polon® OE

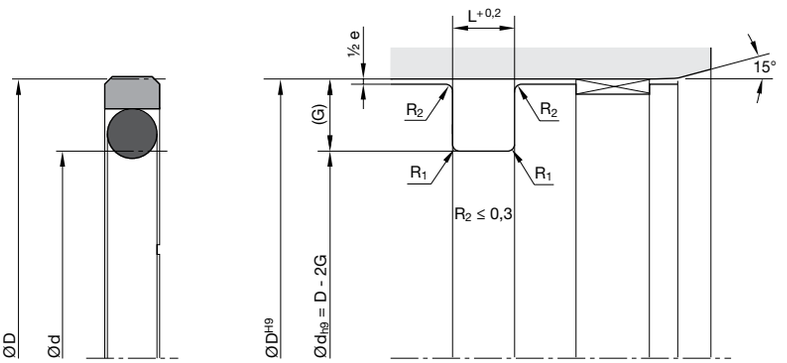

For surface finish, lead in chamfer and other installation dimensions see „General installation guidelines“.

Ordering example

Piston diameter 80 mm

OE 0800 052 00211 D (80.0 x 64.5 x 6.3)

OE	Profile			
0800	Piston diameter × 10			
052	Compound			
00211	Series no. / compound code O-ring			
	00210	without O-ring		
	00211	N0674 (NBR)	70±5 Shore A	-30 / +110 °C
	00212	V0747 (FKM)	75±5 Shore A	-25 / +200 °C
	00213	N0756 (NBR)	75±5 Shore A	-50 / +110 °C
	00214	E0540 (EPDM)	80±5 Shore A	-40 / +150 °C
	00215	N3578 (NBR)	75±5 Shore A	-30 / +110 °C
	00216	N0552 (NBR)	90±5 Shore A	-30 / +100 °C
	00217	N1173 (HNBR)	70±5 Shore A	-30 / +150 °C
D	Cross-section			

Please note:
For certain applications, it might be convenient to use a non-standard cross-section reduced or heavier. In these cases, please replace the standard cross-section code (in above example: „D“) by the one you require (for example „C“ or „E“).

Tel: +45 63 12 83 00 | Email: ps@hymatik.com | www.hymatik.com | Hvidkaervej 27a, DK-5250 Odense SV, Denmark

Slipper Seal® Piston sealing set, Polon® OE

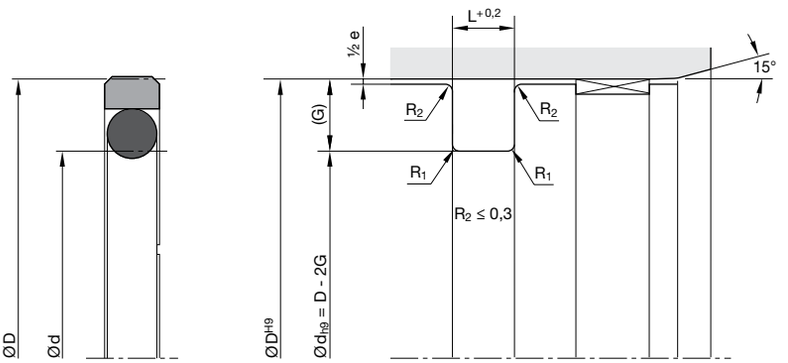

For surface finish, lead in chamfer and other installation dimensions see „General installation guidelines“.

Standard range

Size	Groove				O-ring		ISO[1]
	Ø D (mm)	Ø d (mm)	L (mm)	No.	CS (mm)	ID (mm)	
0080	8	3.10	2.20	2-006	1.78	2.90	
0100	10	5.10	2.20	2-008	1.78	4.47	
0120	12	7.10	2.20	2-010	1.78	6.07	
0150	15	7.50	3.20	2-109	2.62	7.59	
0160	16	11	2.20	2-013	1.78	10.82	•
0160	16	8.50	3.20	2-109	2.62	7.59	•
0180	18	10.50	3.20	2-110	2.62	9.19	
0200	20	15	2.20	2-015	1.78	14	•
0200	20	12.50	3.20	2-111	2.62	10.77	•
0220	22	14.50	3.20	2-113	2.62	13.94	
0250	25	17.50	3.20	2-115	2.62	17.12	•
0250	25	14	4.20	2-207	3.53	13.87	•
0250	25	15	5	2-208	3.53	15.47	•
0280	28	20.50	3.20	2-116	2.62	18.72	
0300	30	22.50	3.20	2-118	2.62	21.89	
0320	32	24.50	3.20	2-119	2.62	23.47	•
0320	32	21	4.20	2-211	3.53	20.22	•
0320	32	22	5	2-212	3.53	21.82	•
0350	35	27.50	3.20	2-121	2.62	26.64	
0400	40	32.50	3.20	2-124	2.62	31.42	•
0400	40	29	4.20	2-216	3.53	28.17	•
0400	40	30	5	2-217	3.53	29.74	•
0420	42	31	4.20	2-217	3.53	29.74	
0450	45	34	4.20	2-219	3.53	32.92	
0480	48	37	4.20	2-221	3.53	36.09	
0500	50	39	4.20	2-222	3.53	37.69	•
0500	50	34.50	6.30	2-324	5.33	34.29	•
0500	50	35	7.50	2-324	5.33	34.29	•

Size	Groove				O-ring		ISO[1]
	Ø D (mm)	Ø d (mm)	L (mm)	No.	CS (mm)	ID (mm)	
0520	52	41	4.20	2-223	3.53	40.87	
0550	55	44	4.20	2-224	3.53	44.04	
0600	60	49	4.20	2-225	3.53	47.22	
0630	63	52	4.20	2-226	3.53	50.39	•
0630	63	47.50	6.30	2-328	5.33	46.99	•
0630	63	48	7.50	2-328	5.33	46.99	•
0650	65	54	4.20	2-227	3.53	53.57	
0700	70	59	4.20	2-228	3.53	56.74	
0800	80	69	4.20	2-232	3.53	69.44	•
0800	80	64.50	6.30	2-333	5.33	62.87	•
0850	85	69.50	6.30	2-335	5.33	69.22	
0900	90	74.50	6.30	2-336	5.33	72.39	
0950	95	79.50	6.30	2-338	5.33	78.74	
1000	100	89	4.20	2-238	3.53	88.49	•
1000	100	84.50	6.30	2-339	5.33	81.92	•
1050	105	89.50	6.30	2-341	5.33	88.27	
1100	110	94.50	6.30	2-343	5.33	94.62	
1150	115	99.50	6.30	2-344	5.33	97.79	
1200	120	104.50	6.30	2-346	5.33	104.14	
1250	125	109.50	6.30	2-347	5.33	107.32	•
1250	125	104	8.10	6-392	6.99	99	•
1250	125	105	10	6-392	6.99	99	•
1300	130	114.50	6.30	2-349	5.33	113.67	
1350	135	114	8.10	2-425	6.99	113.67	
1400	140	119	8.10	2-426	6.99	116.84	
1450	145	124	8.10	2-428	6.99	123.19	
1500	150	129	8.10	2-429	6.99	126.37	
1550	155	134	8.10	2-431	6.99	132.72	

[1] ISO 7425-1
Further sizes on request.

Tel: +45 63 12 83 00 | Email: ps@hymatik.com | www.hymatik.com | Hvidkaervej 27a, DK-5250 Odense SV, Denmark

Slipper Seal® Piston sealing set, Polon® OE

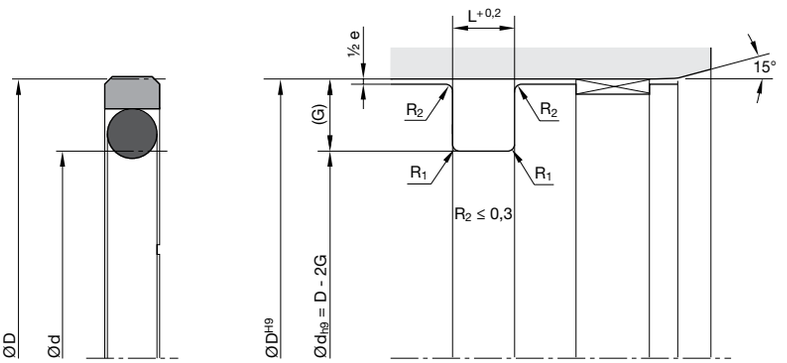

For surface finish, lead in chamfer and other installation dimensions see „General installation guidelines“.

Standard range

Size	Groove				O-ring		ISO[1]
	Ø D (mm)	Ø d (mm)	L (mm)	No.	CS (mm)	ID (mm)	
1600	160	144.50	6.30	2-358	5.33	142.24	•
1600	160	139	8.10	2-433	6.99	139.07	•
1600	160	135	12.50	2-431	6.99	132.72	•
1650	165	144	8.10	2-434	6.99	142.24	
1700	170	149	8.10	2-436	6.99	148.59	
1750	175	154	8.10	2-437	6.99	151.77	
1800	180	159	8.10	2-438	6.99	158.12	
1850	185	164	8.10	2-439	6.99	164.47	
1900	190	169	8.10	2-439	6.99	164.47	
1950	195	174	8.10	2-440	6.99	170.82	
2000	200	184.50	6.30	2-366	5.33	183.52	•
2000	200	179	8.10	2-441	6.99	177.17	•
2000	200	175	12.50	2-440	6.99	170.82	•
2100	210	189	8.10	2-442	6.99	183.52	
2200	220	199	8.10	2-444	6.99	196.22	
2300	230	209	8.10	2-445	6.99	202.57	
2400	240	219	8.10	2-446	6.99	215.27	
2500	250	229	8.10	2-447	6.99	227.97	•
2500	250	225.50	8.10	2-447	6.99	227.97	•
2600	260	239	8.10	2-447	6.99	227.97	
2700	270	249	8.10	2-448	6.99	240.67	
2800	280	259	8.10	2-449	6.99	253.37	
2900	290	269	8.10	2-450	6.99	266.07	
3000	300	279	8.10	2-451	6.99	278.77	
3100	310	289	8.10	2-451	6.99	278.77	
3200	320	299	8.10	2-452	6.99	291.47	•
3200	320	295.50	8.10	2-452	6.99	291.47	•
3300	330	305.50	8.10	2-453	6.99	304.17	
3400	340	315.50	8.10	2-453	6.99	304.17	
3500	350	325.50	8.10	2-454	6.99	316.87	

Size	Groove				O-ring		ISO[1]
	Ø D (mm)	Ø d (mm)	L (mm)	No.	CS (mm)	ID (mm)	
3600	360	335.50	8.10	2-455	6.99	329.57	
3700	370	345.50	8.10	2-456	6.99	342.27	
3800	380	355.50	8.10	2-457	6.99	354.97	
3900	390	365.50	8.10	2-457	6.99	354.97	
4000	400	375.50	8.10	2-458	6.99	367.67	•
4000	400	370	12.50	6-672	10	364	•
4000	400	360	20	6-895	14	359	•
4100	410	385.50	8.10	2-459	6.99	380.37	
4200	420	395.50	8.10	2-460	6.99	393.07	
4300	430	405.50	8.10	2-461	6.99	405.26	
4400	440	415.50	8.10	2-461	6.99	405.26	
4500	450	425.50	8.10	2-462	6.99	417.96	
4600	460	435.50	8.10	2-463	6.99	430.66	
4700	470	445.50	8.10	2-464	6.99	443.36	
4800	480	455.50	8.10	2-465	6.99	456.06	
4900	490	465.50	8.10	2-465	6.99	456.06	
5000	500	475.50	8.10	2-466	6.99	468.76	•
5000	500	470	12.50	6-827	10	470	•
5200	520	495.50	8.10	2-468	6.99	494.16	
5500	550	525.50	8.10	2-469	6.99	506.86	
5700	570	545.50	8.10	2-470	6.99	532.26	
6000	600	575.50	8.10	2-471	6.99	557.66	
6200	620	595.50	8.10	2-472	6.99	582.68	
6400	640	615.50	8.10	2-473	6.99	608.08	
6500	650	622	9.50	-	8.40	635	
7000	700	672	9.50	-	8.40	660	
8000	800	772	9.50	-	8.40	770	
9000	900	872	9.50	-	8.40	888	

[1] ISO 7425-1

Further sizes on request.

Tel: +45 63 12 83 00 | Email: ps@hymatik.com | www.hymatik.com | Hvidkaervej 27a, DK-5250 Odense SV, Denmark

Piston sealing set, Polon®

OG



The single-acting OG rod sealing set consists of a PTFE piston sealing ring and an elastomer O-ring as a preloading element. The asymmetrical cross-section of the sealing ring has been designed for optimum return of drag or trapped oil back into the cylinder. When the rod extends from the cylinder the OG profile is riding on a sealing point, creating a high compression point to limit leakage. As the rod goes through its return stroke, this seal rocks forward, creating a larger sealing surface on the rod. The compression force is spread out over a larger area allowing trapped fluid to pass under the seal and return to the system.
The optimum sealing effect is achieved by installation as a buffer seal in a tandem arrangement with a primary rod seal or with itself and in combination with a wiper ring.
The OG sealing set is particularly suitable for single-acting pistons in control cylinders, servo controlled systems, machine tools and quick-acting cylinders. Due to the material combination of the slide ring (PTFE) and the O-ring (elastomer), this product is suitable for a wide range of applications, especially for aggressive media and/or high temperatures. Several compounds can alternatively be selected according to the specific application profile.

- Good sealing performance in extremely small assembly conditions.
- Excellent wear resistance.
- Minimal break-away and dynamic friction and no stick-slip tendency ensures uniform motion even at low speeds.
- Good energy efficiency due to low friction.
- Insensitive to pressure peaks.
- High temperature resistance assured by suitable O-ring compound selection.
- High extrusion resistance.
- Adaptable to nearly all media thanks to high chemical resistance of the sealing ring and large O-ring compound selection.
- Dimensions according to ISO 7425-1.
- Also available as double-acting version.
- Short axial assembly length.
- Installation in closed and undercut housings.
- Available in diameters from 4 to 4500 mm.
- Additional sizes of machined products available on short notice.

Range of Application

Operating pressure	≤ 400 bar
in case of reduced extrusion gap (H7/f7) and large cross sections	≤ 600 bar
Operating temperature	-30 °C to +100 °C [1]
Sliding speed	≤ 4 m/s

[1] With deviation from standard temperature range, please contact our consultancy service for adequate O-ring compound.

Compounds

Sealing ring: Polon® 052, PTFE + 40 % bronze.
O-ring: N0674, NBR elastomer with approx. 70 Shore A.

Installation

This seal should only be used in combination with guiding elements (e.g. F3).

In case of special operating conditions (specific pressure loads, temperature, speed, use in water, HFA, HFB fluids etc.), please contact our consultancy service for a selection of the material and design best suiting your particular application requirements.

Tel: +45 63 12 83 00 | Email: ps@hymatik.com | www.hymatik.com | Hvidkaervej 27a, DK-5250 Odense SV, Denmark

Piston sealing set, Polon®

OG

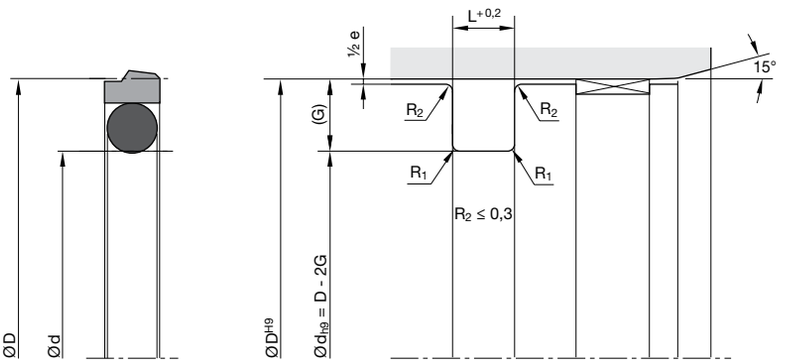

For surface finish, lead in chamfer and other installation dimensions see „General installation guidelines“.

Housing dimensions

Series no.	Cross-section	O-ring cross-section (mm)	Recommended piston Ø range D (mm) ≥	D (mm) <	Groove width L (mm)	Groove depth G (mm)	Gap max. 0200 bar e (mm)	Gap max. 200400 bar e (mm)	Radius max. R_1 (mm)	ISO[1)]
00270	A	1.78	8	17	2.2	2.45	0.6 - 0.4	0.4 - 0.2	0.5	
00270	B	2.62	17	27	3.2	3.65	0.8 - 0.5	0.5 - 0.3	0.5	
00270	C	3.53	27	60	4.2	5.35	0.8 - 0.5	0.5 - 0.3	0.5	
00270	D	5.33	60	200	6.3	7.55	1.0 - 0.6	0.6 - 0.4	0.9	
00270	E	6.99	200	256	8.1	10.25	1.0 - 0.6	0.6 - 0.4	0.9	
00270	F	6.99	256	670	8.1	12	1.2 - 0.7	0.7 - 0.5	0.9	
00270	G	8.4	670	1000	9.5	13.65	1.4 - 0.8	0.8 - 0.6	0.9	
00270	H	12	1000	-	13.8	19	1.4 - 0.8	0.8 - 0.6	0.9	
00270	K	1.78	8	17	2.2	2.5	0.6 - 0.4	0.4 - 0.2	0.5	•
00270	L	2.62	17	27	3.2	3.75	0.8 - 0.5	0.5 - 0.3	0.5	•
00270	M	3.53	27	60	4.2	5.5	0.8 - 0.5	0.5 - 0.3	0.5	•
00270	N	3.53	27	60	5	5	0.8 - 0.5	0.5 - 0.3	0.5	•
00270	O	5.33	60	200	6.3	7.75	1.0 - 0.6	0.6 - 0.4	0.9	•
00270	P	5.33	60	200	7.5	7.5	1.0 - 0.6	0.6 - 0.4	0.9	•
00270	Q	6.99	200	256	8.1	10.5	1.0 - 0.6	0.6 - 0.4	0.9	•
00270	R	6.99	256	670	8.1	12.25	1.2 - 0.7	0.7 - 0.5	0.9	•
00270	S	6.99	200	256	10	10	1.2 - 0.7	0.7 - 0.5	0.9	•
00270	T	6.99	256	670	12.5	12.5	1.2 - 0.7	0.7 - 0.5	0.9	•
00270	U	10.00	670	1000	12.5	15	1.4 - 0.8	0.8 - 0.6	0.9	•
00270	V	10.00	670	1000	15	15	1.4 - 0.8	0.8 - 0.6	0.9	•
00270	W	14.00	1000	-	20	20	1.4 - 0.8	0.8 - 0.6	0.9	•

1) Housing dimensions according to ISO 7425-1

Tel: +45 63 12 83 00 | Email: ps@hymatik.com | www.hymatik.com | Hvidkaervej 27a, DK-5250 Odense SV, Denmark

Piston sealing set, Polon®

OG

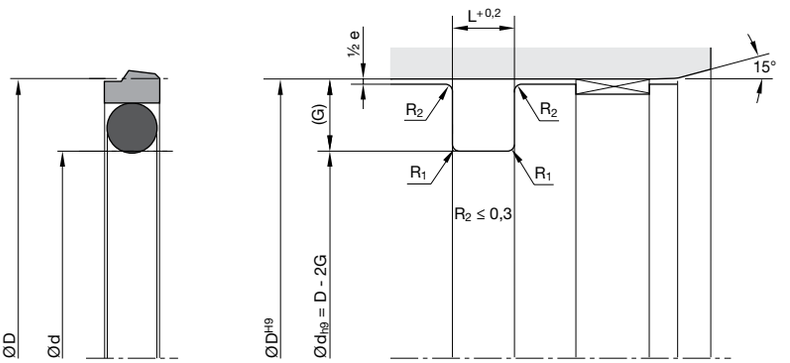

For surface finish, lead in chamfer and other installation dimensions see „General installation guidelines“.

Ordering example

Piston diameter 80 mm

OG 0800 052 00271 D (80 × 64.9 × 6.3)

OG	Profile			
0800	Piston diameter × 10			
052	Compound			
00271	Series no. / compound code O-ring			
	00270	without O-ring		
	00271	N0674 (NBR)	70±5 Shore A	-30 / +110 °C
	00272	V0747 (FKM)	75±5 Shore A	-25 / +200 °C
	00273	N0756 (NBR)	75±5 Shore A	-50 / +110 °C
	00274	E0540 (EPDM)	80±5 Shore A	-40 / +150 °C
	00275	N3578 (NBR)	75±5 Shore A	-30 / +110 °C
	00276	N0552 (NBR)	90±5 Shore A	-30 / +100 °C
	00277	N1173 (HNBR)	70±5 Shore A	-30 / +150 °C
D	Cross-section			

Please note:
For certain applications, it might be convenient to use a non-standard cross-section reduced or heavier. In these cases, please replace the standard cross-section code (in above example: „D“) by the one you require (for example „C“ or „E“).

Tel: +45 63 12 83 00 | Email: ps@hymatik.com | www.hymatik.com | Hvidkaervej 27a, DK-5250 Odense SV, Denmark

Piston sealing set, Polon®

OG

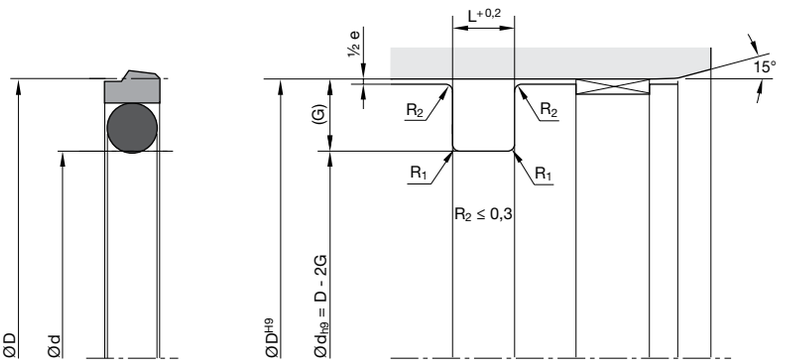

For surface finish, lead in chamfer and other installation dimensions see „General installation guidelines“.

Standard range

Size	Groove				O-ring		ISO[1)]
	Ø D (mm)	Ø d (mm)	L (mm)	No.	CS (mm)	ID (mm)	
0080	8	3.10	2.20	2-006	1.78	2.90	
0100	10	5.10	2.20	2-008	1.78	4.47	
0120	12	7.10	2.20	2-010	1.78	6.07	
0150	15	7.50	3.20	2-109	2.62	7.59	
0160	16	11	2.20	2-013	1.78	10.82	•
0160	16	8.50	3.20	2-109	2.62	7.59	•
0180	18	10.50	3.20	2-110	2.62	9.19	
0200	20	15	2.20	2-015	1.78	14	•
0200	20	12.50	3.20	2-111	2.62	10.77	•
0220	22	14.50	3.20	2-113	2.62	13.94	
0250	25	17.50	3.20	2-115	2.62	17.12	•
0250	25	14	4.20	2-207	3.53	13.87	•
0250	25	15	5	2-208	3.53	15.47	•
0280	28	20.50	3.20	2-116	2.62	18.72	
0300	30	22.50	3.20	2-118	2.62	21.89	
0320	32	24.50	3.20	2-119	2.62	23.47	•
0320	32	21	4.20	2-211	3.53	20.22	•
0320	32	22	5	2-212	3.53	21.82	•
0350	35	27.50	3.20	2-121	2.62	26.64	
0400	40	32.50	3.20	2-124	2.62	31.42	•
0400	40	29	4.20	2-216	3.53	28.17	•
0400	40	30	5	2-217	3.53	29.74	•
0420	42	31	4.20	2-217	3.53	29.74	
0450	45	34	4.20	2-219	3.53	32.92	
0480	48	37	4.20	2-221	3.53	36.09	
0500	50	39	4.20	2-222	3.53	37.69	•
0500	50	34.50	6.30	2-324	5.33	34.29	•

Size	Groove				O-ring		ISO[1)]
	Ø D (mm)	Ø d (mm)	L (mm)	No.	CS (mm)	ID (mm)	
0500	50	35	7.50	2-324	5.33	34.29	•
0520	52	41	4.20	2-223	3.53	40.87	
0550	55	44	4.20	2-224	3.53	44.04	
0600	60	49	4.20	2-225	3.53	47.22	
0630	63	52	4.20	2-226	3.53	50.39	•
0630	63	47.50	6.30	2-328	5.33	46.99	•
0630	63	48	7.50	2-328	5.33	46.99	•
0650	65	54	4.20	2-227	3.53	53.57	
0700	70	59	4.20	2-228	3.53	56.74	
0800	80	69	4.20	2-232	3.53	69.44	•
0800	80	64.50	6.30	2-333	5.33	62.87	•
0850	85	69.50	6.30	2-335	5.33	69.22	
0900	90	74.50	6.30	2-336	5.33	72.39	
0950	95	79.50	6.30	2-338	5.33	78.74	
1000	100	89	4.20	2-238	3.53	88.49	•
1000	100	84.50	6.30	2-339	5.33	81.92	•
1050	105	89.50	6.30	2-341	5.33	88.27	
1100	110	94.50	6.30	2-343	5.33	94.62	
1150	115	99.50	6.30	2-344	5.33	97.79	
1200	120	104.50	6.30	2-346	5.33	104.14	
1250	125	109.50	6.30	2-347	5.33	107.32	•
1250	125	104	8.10	6-392	6.99	99	•
1250	125	105	10	6-392	6.99	99	•
1300	130	114.50	6.30	2-349	5.33	113.67	
1350	135	114	8.10	2-425	6.99	113.67	
1400	140	119	8.10	2-426	6.99	116.84	
1450	145	124	8.10	2-428	6.99	123.19	

[1)] ISO 7425-1
Further sizes on request.

Tel: +45 63 12 83 00 | Email: ps@hymatik.com | www.hymatik.com | Hvidkaervej 27a, DK-5250 Odense SV, Denmark

Piston sealing set, Polon®

OG

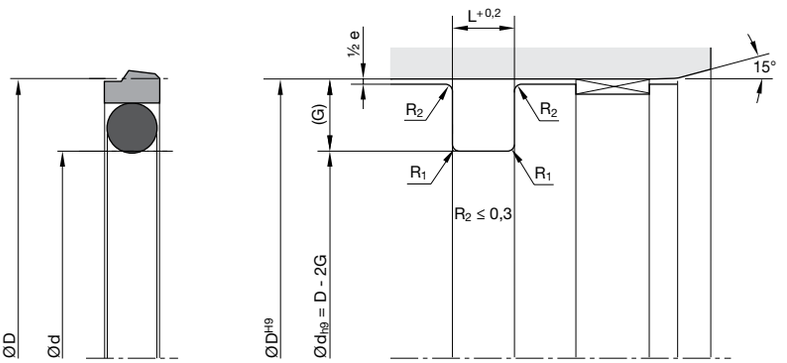

For surface finish, lead in chamfer and other installation dimensions see „General installation guidelines“.

Standard range

Size	Groove				O-ring		ISO[1]
	Ø D (mm)	Ø d (mm)	L (mm)	No.	CS (mm)	ID (mm)	
1500	150	129	8.10	2-429	6.99	126.37	
1550	155	134	8.10	2-431	6.99	132.72	
1600	160	144.50	6.30	2-358	5.33	142.24	•
1600	160	139	8.10	2-433	6.99	139.07	•
1600	160	135	12.50	2-431	6.99	132.72	•
1650	165	144	8.10	2-434	6.99	142.24	
1700	170	149	8.10	2-436	6.99	148.59	
1750	175	154	8.10	2-437	6.99	151.77	
1800	180	159	8.10	2-438	6.99	158.12	
1850	185	164	8.10	2-439	6.99	164.47	
1900	190	169	8.10	2-439	6.99	164.47	
1950	195	174	8.10	2-440	6.99	170.82	
2000	200	184.50	6.30	2-366	5.33	183.52	•
2000	200	179	8.10	2-441	6.99	177.17	•
2000	200	175	12.50	2-440	6.99	170.82	•
2100	210	189	8.10	2-442	6.99	183.52	
2200	220	199	8.10	2-444	6.99	196.22	
2300	230	209	8.10	2-445	6.99	202.57	
2400	240	219	8.10	2-446	6.99	215.27	
2500	250	229	8.10	2-447	6.99	227.97	•
2500	250	225.50	8.10	2-447	6.99	227.97	•
2600	260	239	8.10	2-447	6.99	227.97	
2700	270	249	8.10	2-448	6.99	240.67	
2800	280	259	8.10	2-449	6.99	253.37	
2900	290	269	8.10	2-450	6.99	266.07	
3000	300	279	8.10	2-451	6.99	278.77	
3100	310	289	8.10	2-451	6.99	278.77	
3200	320	299	8.10	2-452	6.99	291.47	•
3200	320	295.50	8.10	2-452	6.99	291.47	•
3300	330	305.50	8.10	2-453	6.99	304.17	

Size	Groove				O-ring		ISO[1]
	Ø D (mm)	Ø d (mm)	L (mm)	No.	CS (mm)	ID (mm)	
3400	340	315.50	8.10	2-453	6.99	304.17	
3500	350	325.50	8.10	2-454	6.99	316.87	
3600	360	335.50	8.10	2-455	6.99	329.57	
3700	370	345.50	8.10	2-456	6.99	342.27	
3800	380	355.50	8.10	2-457	6.99	354.97	
3900	390	365.50	8.10	2-457	6.99	354.97	
4000	400	375.50	8.10	2-458	6.99	367.67	•
4000	400	370	12.50	6-672	10	364	•
4000	400	360	20	6-895	14	359	•
4100	410	385.50	8.10	2-459	6.99	380.37	
4200	420	395.50	8.10	2-460	6.99	393.07	
4300	430	405.50	8.10	2-461	6.99	405.26	
4400	440	415.50	8.10	2-461	6.99	405.26	
4500	450	425.50	8.10	2-462	6.99	417.96	
4600	460	435.50	8.10	2-463	6.99	430.66	
4700	470	445.50	8.10	2-464	6.99	443.36	
4800	480	455.50	8.10	2-465	6.99	456.06	
4900	490	465.50	8.10	2-465	6.99	456.06	
5000	500	475.50	8.10	2-466	6.99	468.76	•
5000	500	470	12.50	6-827	10	470	•
5200	520	495.50	8.10	2-468	6.99	494.16	
5500	550	525.50	8.10	2-469	6.99	506.86	
5700	570	545.50	8.10	2-470	6.99	532.26	
6000	600	575.50	8.10	2-471	6.99	557.66	
6200	620	595.50	8.10	2-472	6.99	582.68	
6400	640	615.50	8.10	2-473	6.99	608.08	
6500	650	622	9.50	-	8.40	635	
7000	700	672	9.50	-	8.40	660	
8000	800	772	9.50	-	8.40	770	
9000	900	872	9.50	-	8.40	888	

[1] ISO 7425-1

Further sizes on request.

Tel: +45 63 12 83 00 | Email: ps@hymatik.com | www.hymatik.com | Hvidkaervej 27a, DK-5250 Odense SV, Denmark

Piston sealing set, Polon®

ZW



The ZW double-acting piston sealing set consists of an elastomer sealing component, two anti-extrusion and two angular guide rings. By combining the sealing and guiding functions, it offers a cost-effective all-in-one solution for medium-duty standard cylinders.

- Good wear resistance.
- Assembly on one-part piston is possible.
- Installation in closed and undercut housings.

Range of Application

Sealing set for double-acting pistons in presses, drive cylinders, back-up and operating cylinders for industrial and mobile hydraulics.

Operating pressure	≤ 400 bar
Operating temperature	-35 °C to +100 °C
in HFA, HFB and HFC fluids	+60 °C
Sliding speed	≤ 0.5 m/s

Compounds

Rubber component: Highly wear-resistant NBR-compound NB078 with a hardness of 80 Shore A.
Anti-extrusion rings: High-strength, wear-optimized polyester elastomer (W5035).
Angular guide rings: Thermoplast for high pressure resistance even with increased temperatures (W5301).

Installation

Sharp edges and burrs in the assembly area of the seal must be removed. Assembly is performed in the following sequence: „rubber seal, anti-extrusion rings, angular guide rings“. Ensure that the contact points (gaps) of the angular guide and anti-extrusion rings are arranged in staggering positions.

In case of special operating conditions (specific pressure loads, temperature, speed, use in water, HFA, HFB fluids etc.), please contact our consultancy service for a selection of the material and design best suiting your particular application requirements.

Tel: +45 63 12 83 00 | Email: ps@hymatik.com | www.hymatik.com | Hvidkaervej 27a, DK-5250 Odense SV, Denmark

Piston sealing set, Polon®

ZW

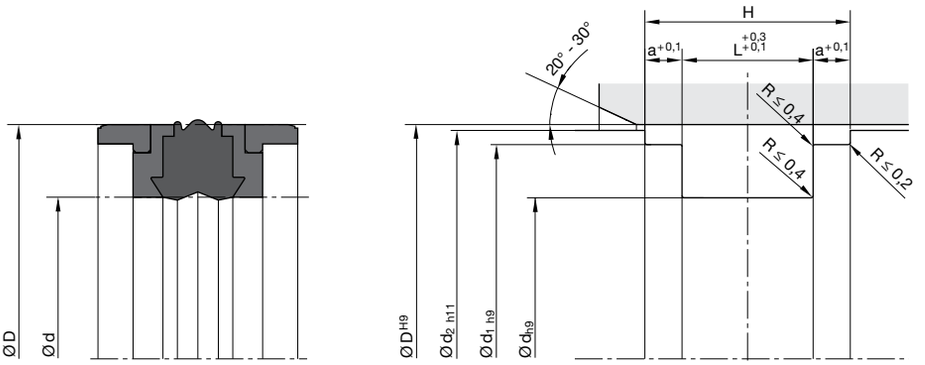

For surface finish, lead in chamfer and other installation dimensions see „General installation guidelines“.

D	d	L	H	d_1	d_2	a	Order code
30	21	13.5	17.7	27	29	2.1	ZW 0030 00260
32	22	15.5	20.7	28	31	2.6	ZW 0032 00260
40	24	18.4	31.1	35.4	38.5	6.35	ZW 0040 00260
40	26	15.5	20.7	36	39	2.6	ZW 1040 00260
40	30	16.4	29.1	35.4	38.5	6.35	ZW 2040 00260
50	34	18.4	31.1	45.4	48.5	6.35	ZW 0050 00260
50	34	20.5	26.7	46	49	3.1	ZW 1050 00260
50	38	20.5	28.9	46	48.5	4.2	ZW 2050 00260
55	39	18.4	31.1	50.36	53.5	6.35	ZW 0055 00260
60	44	18.4	31.1	55.4	58.5	6.35	ZW 0060 00260
60	44	20.5	26.7	56	59	3.1	ZW 1060 00260
60	48	20.5	28.9	56	58.5	4.2	ZW 2060 00260
63	47	18.4	31.1	58.4	61.5	6.35	ZW 0063 00260
63	47	19.4	32.1	58.4	61.5	6.35	ZW 1063 00260
63	47	20.5	26.7	59	62	3.1	ZW 2063 00260
63	51	20.5	28.9	59	61.5	4.2	ZW 3063 00260
65	49	20.5	26.7	61	64	3.1	ZW 0065 00260
65	50	18.4	31.1	60.4	63.5	6.35	ZW 1065 00260
70	50	22.4	35.1	64.2	68.3	6.35	ZW 0070 00260
70	54	20.5	26.7	66	69	3.1	ZW 1070 00260
70	58	20.5	28.9	66	68.5	4.2	ZW 2070 00260
75	55	22.4	35.1	69.2	73.3	6.35	ZW 0075 00260
80	60	22.4	35.1	74.15	78.3	6.35	ZW 0080 00260
80	62	22.5	29.7	76	79	3.6	ZW 1080 00260
80	66	22.5	32.9	76	78.5	5.2	ZW 2080 00260
85	65	22.4	31.5	79.3	83.3	6.35	ZW 0085 00260
90	70	22.4	35.1	84.15	88.3	6.35	ZW 0090 00260
90	72	22.5	29.7	86	89	3.6	ZW 1090 00260
100	75	22.4	35.1	93.15	98	6.35	ZW 0100 00260
100	82	22.5	29.7	96	99	3.6	ZW 1100 00260
100	86	22.5	32.9	96	98.5	5.2	ZW 2100 00260
105	80	22.4	35.4	98.1	103	6.5	ZW 0105 00260
110	85	22.4	35.1	103.1	108	6.35	ZW 0110 00260
110	92	22.5	29.7	106	109	3.6	ZW 1110 00260

Further sizes on request.

Tel: +45 63 12 83 00 | Email: ps@hymatik.com | www.hymatik.com | Hvidkaervej 27a, DK-5250 Odense SV, Denmark

Piston sealing set, Polon®

ZW

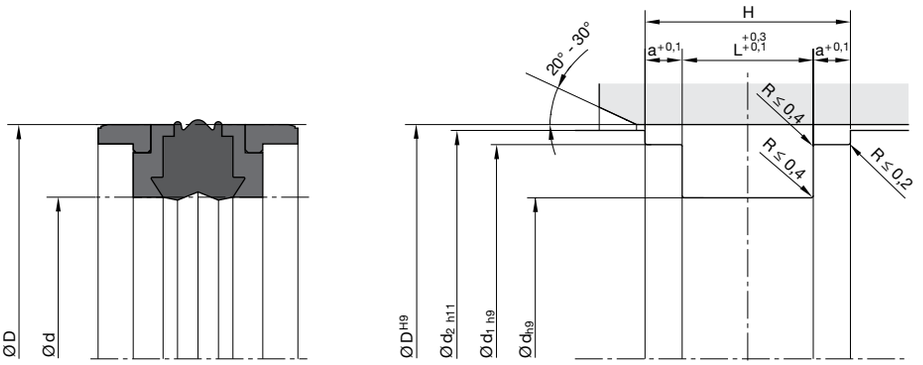

For surface finish, lead in chamfer and other installation dimensions see „General installation guidelines“.

D	d	L	H	d_1	d_2	a	Order code
110	96	22.5	32.9	106	109.4	5.2	ZW 2110 00260
115	90	22.4	35.1	108.1	113	6.35	ZW 0115 00260
115	97	22.5	29.7	111	114	3.6	ZW 1115 00260
120	95	22.4	35.1	113.1	118	6.35	ZW 0120 00260
125	100	25.4	38.1	118.1	123	6.35	ZW 0125 00260
125	108	26.5	40.9	121	124.4	7.2	ZW 2125 00260
140	115	25.4	38.1	133	138	6.35	ZW 1140 00260
140	115	25.4	44.4	132.6	137.5	9.5	ZW 0140 00260
140	118	26.5	36.7	136	139	5.1	ZW 2140 00260
150	125	25.4	38.1	143	148	6.35	ZW 1150 00260
150	125	25.4	44.4	142.6	147.5	9.5	ZW 0150 00260
160	130	25.4	38.1	152.7	158	6.35	ZW 3160 00260
160	135	25.4	44.4	152.6	157.5	9.5	ZW 0160 00260
170	145	25.4	50.8	161.7	167.1	12.7	ZW 0170 00260
180	150	35.4	48.1	172.95	177.87	6.35	ZW 0180 00260
180	155	25.4	50.8	171.7	177.1	12.7	ZW 1180 00260
200	175	25.4	50.8	191.6	197	12.7	ZW 0200 00260
220	190	35.4	48.1	212.7	217.9	6.35	ZW 0220 00260
250	220	35.4	48.1	242.9	247.85	6.35	ZW 0250 00260
250	225	25.4	50.8	241.6	247	12.7	ZW 1250 00260

Further sizes on request.

Tel: +45 63 12 83 00 | Email: ps@hymatik.com | www.hymatik.com | Hvidkaervej 27a, DK-5250 Odense SV, Denmark

Piston sealing set, Polon®

OK



The profile OK piston sealing set is primarily designed for heavy-duty hydraulic applications and is preferably used in double-acting cylinders. It is extremely robust and withstands even extreme pressure peaks.
The sealing set consists of a plastic slide ring and an elastomer energizer.

- Extreme wear resistance.
- Easy installation on single-part piston without assembly aids due to the split design of the sealing ring.
- Assembly on one-part piston is possible.
- Insensitive to extreme pressure peaks.
- Extremely high extrusion resistance.
- High extrusion resistance in case of high pressures and large gaps due to the special compound properties of the seal ring.
- Dimensions according to ISO 7425-1.
- Short axial assembly length.
- Installation in closed and undercut housings.
- Additional sizes of machined products available on short notice.

Range of Application

Operating pressure	≤ 800 bar
Operating temperature	-30 °C to +110 °C
Sliding speed	≤ 1 m/s

Compounds

Sealing ring: filled modified thermoplast (W5019).
Expander ring: NBR-based elastomer with approx. 70 Shore A (N3571).

Installation

The installation groove must be carefully deburred and cleaned. The cylinder bore must have a leading edge chamfer. Profile OK can be snapped into closed grooves.

In case of special operating conditions (specific pressure loads, temperature, speed, use in water, HFA, HFB fluids etc.), please contact our consultancy service for a selection of the material and design best suiting your particular application requirements.

Tel: +45 63 12 83 00 | Email: ps@hymatik.com | www.hymatik.com | Hvidkaervej 27a, DK-5250 Odense SV, Denmark

Piston sealing set, Polon®

OK

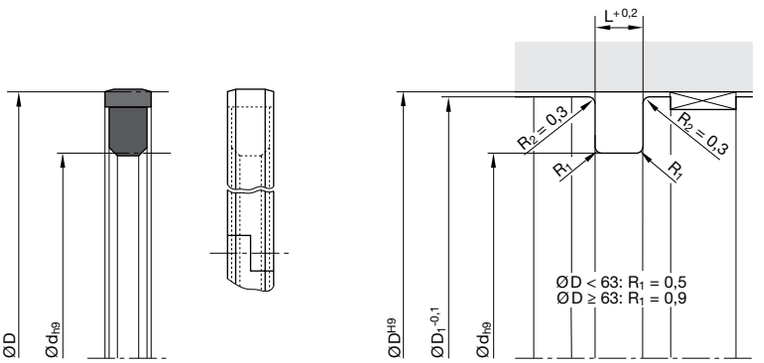

For surface finish, lead in chamfer and other installation dimensions see „General installation guidelines“.

D	d	L	D_1	ISO[1)]	Order code
25	16	4.2	24.3		OK 0025 00704
32	21	4.2	31.3	·	OK 0032 00704
40	26.3	5.8	39.2		OK 0040 00701
40	29	4.2	39.3	·	OK 0040 00704
50	34.5	6.3	49	·	OK 0049 00701
50	36.3	5.8	49.2		OK 0050 00701
50	37	8	49.2		OK 0051 00704
50	39	4.2	49.3		OK 0050 00704
55	44	4.2	54.3		OK 0054 00704
60	41.7	7	59.2		OK 0061 00704
60	49	4.2	59.3		OK 0060 00704
63	44.7	7	62.2		OK 0063 00701
63	47.5	6.3	62	·	OK 0062 00701
63	52	4.2	62.2	·	OK 0064 00704
70	51.7	7	69.2		OK 0070 00701
70	54.5	6.3	69.2		OK 0072 00704
70	59	4.2	69.3		OK 0070 00704
75	54	8	74.2		OK 0075 00701
75	59.5	6.3	74		OK 0076 00701
80	59	8	79		OK 0080 00701
80	64.5	6.3	79	·	OK 0083 00701
85	64	8	84		OK 0085 00701
90	69	8	89		OK 0090 00701
90	74.5	6.3	89		OK 0091 00701
95	74	8	94		OK 0095 00704
100	79	8	99		OK 0100 00701
100	84.5	6.3	99	·	OK 0101 00701
105	84	8	103.8		OK 0105 00701
110	89	8	108.8		OK 0110 00701
110	94.5	6.3	109		OK 0111 00701
115	94	8	113.8		OK 0115 00701
115	100	8	113.8		OK 0116 00701
120	99	8	118.8		OK 0120 00701
125	104	8	123.8	·	OK 0125 00701

D	d	L	D_1	ISO[1)]	Order code
125	109.5	6.3	124	·	OK 0124 00701
130	109	8	128.8		OK 0130 00701
130	115	8	128.8		OK 0132 00701
135	114	8	133.8		OK 1135 00701
140	119	8	138.8		OK 0140 00701
145	124	8	143.8		OK 0145 00701
150	129	8	148.8		OK 0150 00701
150	135	8	148.8		OK 0151 00701
152.4	131.5	8	151.2		OK 0152 00701
160	139	8	158.8	·	OK 0160 00701
160	148	8	158.8		OK 0163 00701
165	144	8	163.8		OK 0165 00701
170	149	8	168.8		OK 0170 00701
175	154	8	173.8		OK 0175 00704
180	159	8	178.8		OK 0180 00701
190	169	8	188.8		OK 0190 00701
200	179	8	198.8	·	OK 0200 00701
210	189	8	208.4		OK 0210 00701
220	199	8	218.4		OK 0220 00701
220	205	8	218.4		OK 0221 00701
230	209	8	228.4		OK 0230 00704
240	225	8	238.4		OK 0240 00701
250	229	8	248.4	·	OK 0250 00701
260	239	8	258.4		OK 0260 00704
270	249	8	268.4		OK 0270 00701
280	255.5	8	278.4		OK 0280 00701
290	271	9.5	287.8		OK 0290 00701
300	272	9.5	297.8		OK 0300 00701
320	292	9.5	317.8		OK 0320 00701
330	302	9.5	327.8		OK 0330 00701
350	322	9.5	347.8		OK 0350 00701
370	342	9.5	367.8		OK 0370 00701
420	392	9.5	417.8		OK 0420 00701
480	452	9.5	477.8		OK 0480 00701

1) ISO 7425-1
Further sizes on request.

Tel: +45 63 12 83 00 | Email: ps@hymatik.com | www.hymatik.com | Hvidkaervej 27a, DK-5250 Odense SV, Denmark

Other seal products

Profile cross-section	Profile reference	Page
O-rings		
	V1	124
Anti-extrusion rings		
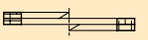	XA, XB, XC	130
Static radial seal		
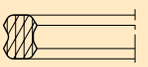	HS	134
Flange seals		
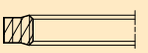	OV	136
Rotary seals		
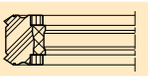	KA	139
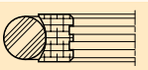	OR	141
	RS	147
Sealing sets for piston accumulators		
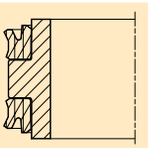	KS	149

Tel: +45 63 12 83 00 | Email: ps@hymatik.com | www.hymatik.com | Hvidkaervej 27a, DK-5250 Odense SV, Denmark

O-ring

V1

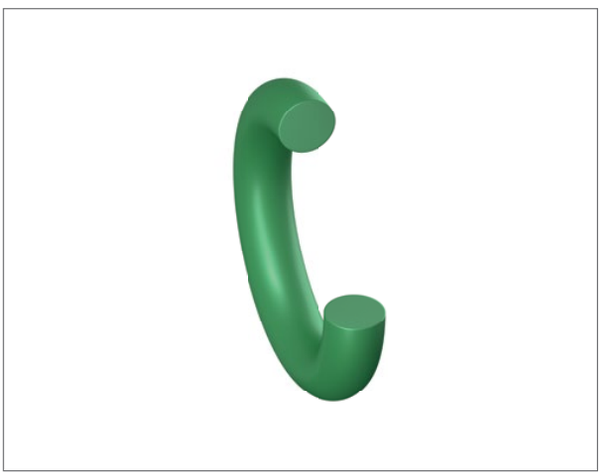

The Ultrathan® V1 O-ring is an alternative to conventional rubber elastomer O-rings. Due to the extrusion resistance of the polyurethane compounds, there is no need to use a back-up ring at higher or pulsating pressures. By eliminating the need for back-up rings the required width of the groove is reduced. Due to its high wear resistance, a polyurethane O-ring is also suitable for dynamic pneumatics applications. Very good results have been achieved, for instance, in pneumatic valves for sealing pilot and main control pistons.

- Robust seal profile for harshest operating conditions.
- Extreme wear resistance.
- Suitable for fully automatic installation.
- Insensitive to pressure peaks.
- High extrusion resistance.
- Excellent media resistance in case of suitable compound selection.
- Suitable compounds available for special requirements of the chemical process industry.
- Suitable compounds available for special requirements of the food processing industry.
- Installation in closed and undercut housings.
- Can be used in existing O-ring grooves.
- Additional sizes of machined products available on short notice.

Range of Application

The Ultrathan® O-rings are used when the physical properties of other compounds are insufficient.
Mainly for the sealing of cylinders, controls and valves.

Operating pressure	≤ 600 bar [1)]
Operating temperature	
Hydraulics	-35 °C to +100 °C
in water, HFA and HFB fluids	-35 °C to +50 °C
Pneumatics	-35 °C to +80 °C
Sliding speed	≤ 0.5 m/s
Media	Hydraulic oils based on mineral oil, HFA, and HFB fluids

[1)] With reduced extrusion gap and suitable cross-section.

Compounds

The compound Ultrathan® P5008 is a Parker standard material based on polyurethane with a Shore A hardness of approx. 93. Its main advantages in comparison with other polyurethane materials currently available on the market are the increased heat resistance and a better wear resistence. For low temperatures, the material Ultrathan® P5009 is recommended. For fluids containing water, we recommend our hydrolysis-resistant compounds P5000, P5001, P5012 and P5070.

Installation

Due to the higher modulus of the polyurethane compounds, the housings are slightly different from those of standard O-rings.
All edges should be rounded by at least R = 0.1.
In the case of special applications, please discuss your problems with our consultancy service.
Polyurethane O-rings show no tendency to twisting.

In case of special operating conditions (specific pressure loads, temperature, speed, use in water, HFA, HFB fluids etc.), please contact our consultancy service for a selection of the material and design best suiting your particular application requirements.

Tel: +45 63 12 83 00 | Email: ps@hymatik.com | www.hymatik.com | Hvidkaervej 27a, DK-5250 Odense SV, Denmark

O-ring

V1

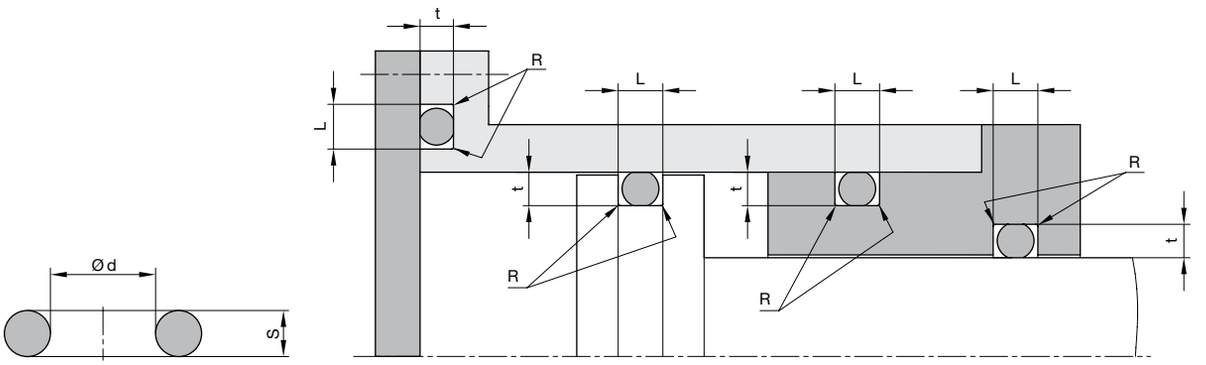

For surface finish, lead in chamfer and other installation dimensions see „General installation guidelines“.

O-ring glandsizes

S (mm)	R (mm)	Groove depth (radial) t (mm)* static	dynamic hydraulic	dynamic pneumatic	Groove width (axial) L (mm) without anti-extrusion ring
1.00	0.2	$0.65^{\pm0.05}$	$0.75^{\pm0.02}$	$0.80^{\pm0.02}$	$1.4^{+0.2}$
1.50	0.2	$1.05^{\pm0.05}$	$1.20^{\pm0.02}$	$1.25^{\pm0.02}$	$2.0^{+0.2}$
1.80	0.2	$1.30^{\pm0.05}$	$1.45^{\pm0.02}$	$1.55^{\pm0.02}$	$2.4^{+0.2}$
2.00	0.2	$1.50^{\pm0.05}$	$1.65^{\pm0.02}$	$1.75^{\pm0.02}$	$2.7^{+0.2}$
2.50	0.2	$1.95^{\pm0.05}$	$2.10^{\pm0.02}$	$2.20^{\pm0.02}$	$3.4^{+0.2}$
2.65	0.3	$2.05^{\pm0.05}$	$2.25^{\pm0.02}$	$2.35^{\pm0.02}$	$3.6^{+0.2}$
3.00	0.3	$2.40^{\pm0.05}$	$2.55^{\pm0.02}$	$2.70^{\pm0.02}$	$4.2^{+0.2}$
3.50	0.3	$2.80^{\pm0.07}$	$3.05^{\pm0.05}$	$3.20^{\pm0.05}$	$4.8^{+0.2}$
3.55	0.3	$2.85^{\pm0.07}$	$3.10^{\pm0.05}$	$3.25^{\pm0.05}$	$4.8^{+0.2}$
4.00	0.3	$3.25^{\pm0.07}$	$3.50^{\pm0.05}$	$3.65^{\pm0.05}$	$5.4^{+0.2}$
5.00	0.3	$4.15^{\pm0.10}$	$4.45^{\pm0.05}$	$4.65^{\pm0.05}$	$6.8^{+0.2}$
5.30	0.5	$4.40^{\pm0.10}$	$4.70^{\pm0.05}$	$4.90^{\pm0.05}$	$7.2^{+0.2}$
7.00	0.5	$5.85^{\pm0.10}$	$6.25^{\pm0.05}$	$6.55^{\pm0.05}$	$9.6^{+0.2}$

* Groove depth t = Back-up dimension t

Tel: +45 63 12 83 00 | Email: ps@hymatik.com | www.hymatik.com | Hvidkaervej 27a, DK-5250 Odense SV, Denmark

O-ring

V1

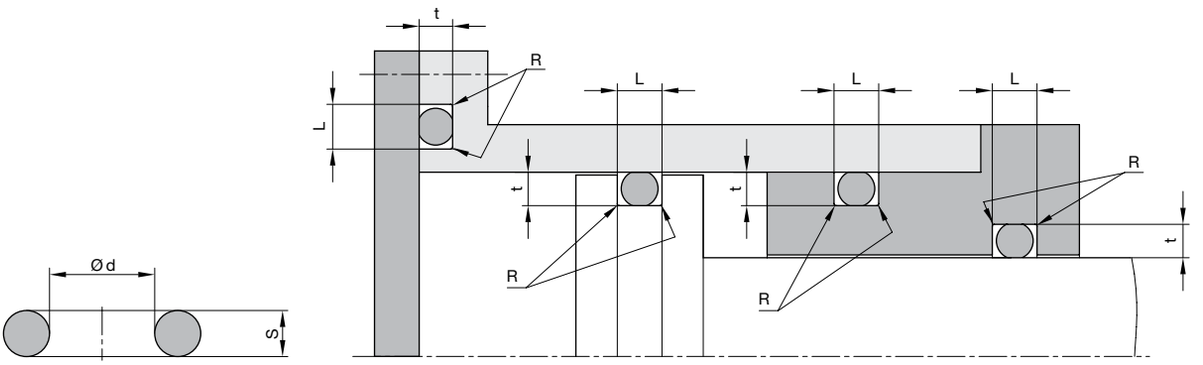

For surface finish, lead in chamfer and other installation dimensions see „General installation guidelines“.

Recommended interference

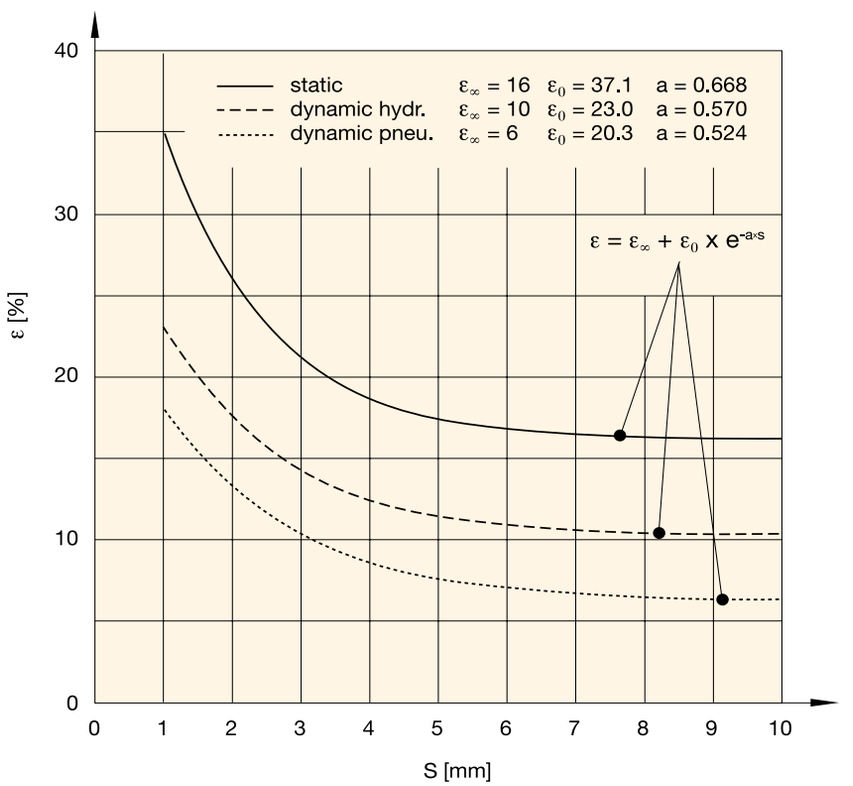

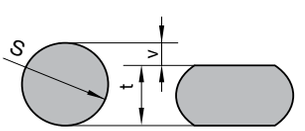

ε [mm]: $\varepsilon = \frac{v}{100} \cdot 100\ [\%]$

t [mm]: $t = S \cdot (1 - \frac{\varepsilon}{100})$

* Groove depth t = Back-up dimension t

O-ring

V1

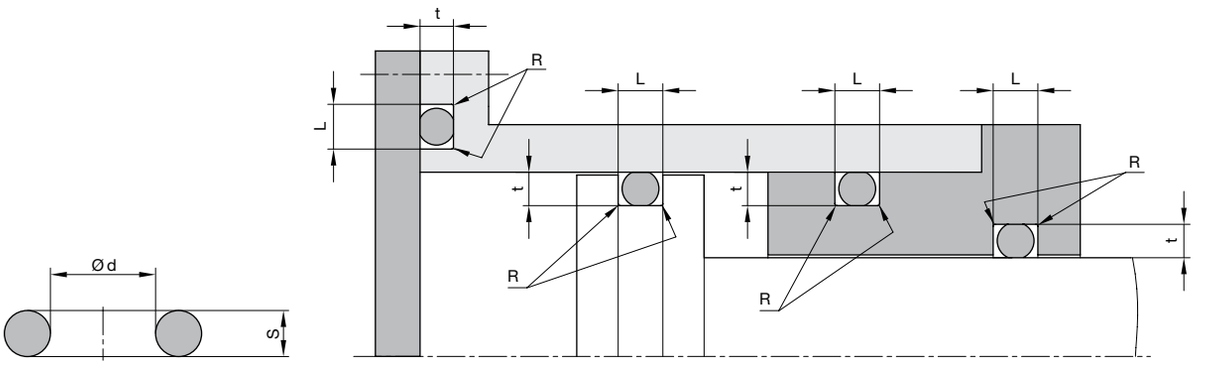

For surface finish, lead in chamfer and other installation dimensions see „General installation guidelines“.

d	S	Order code
1.78	1.7	V1 0067 P5008
2.5	1.2	V1 0110 P5008
2.9	1.8	V1 0140 P5008
3	1.5	V1 0151 P5008
3.2	1.8	V1 0166 P5008
3.4	1.9	V1 0180 P5008
3.5	1.2	V1 0185 P5008
4	1.5	V1 0208 P5008
4	2	V1 0212 P5008
4.2	1.9	V1 0235 P5008
4.6	2	V1 0263 P5008
5	1.5	V1 0285 P5008
5	2	V1 0291 P5008
5	2.5	V1 0294 P5008
5.28	1.78	V1 0305 P5008
5.3	2.4	V1 0310 P5008
5.7	1.9	V1 0320 P5008
6	2	V1 0335 P5008
6.3	2.4	V1 0362 P5070
6.4	2	V1 0367 P5008
6.7	2	V1 0379 P5008
7	2	V1 0397 P5008
7	2.4	V1 0399 P5008
7.3	2.4	V1 0430 P5008
7.5	2	V1 0443 P5008
8	1.65	V1 0484 P5008
8	2	V1 0485 P5008
8	2.5	V1 0490 P5008
9	1.5	V1 0562 P5008
9	2	V1 0566 P5008
9.19	2.62	V1 0603 P5008
9.25	1.78	V1 0615 P5008
9.3	2.4	V1 0620 P5008
10	2	V1 1010 P5008

d	S	Order code
10	2.5	V1 1015 P5008
10	3	V1 1020 P5008
10.3	2.4	V1 1045 P5008
10.77	2.62	V1 1059 P5008
10.82	1.78	V1 1065 P5008
11	2	V1 1074 P5008
11	3	V1 1085 P5008
11.3	2.4	V1 1115 P5008
11.3	2.5	V1 1117 P5008
12	2	V1 1146 P5008
12	2.5	V1 1150 P5008
12	3	V1 1155 P5008
12.1	2.7	V1 1182 P5008
12.3	2.4	V1 1190 P5008
12.37	2.62	V1 1194 P5008
12.42	1.78	V1 1200 P5008
13	2	V1 1219 P5008
13	3	V1 1227 P5008
13.3	2.4	V1 1253 P5008
13.3	2.5	V1 1255 P5008
13.94	2.62	V1 1269 P5008
14	1.78	V1 1284 P5008
14	2	V1 1287 P5008
14	3	V1 1298 P5008
14.03	2.61	V1 1312 P5008
15	3	V1 1365 P5008
15.3	2.4	V1 1397 P5008
15.54	2.62	V1 1415 P5008
15.6	1.78	V1 1418 P5008
16	2	V1 1435 P5008
16.2	2	V1 1478 P5008
16.3	2.4	V1 1480 P5008
16.4	2	V1 1483 P5008
16.9	2.7	V1 1505 P5008

Further sizes on request.

Tel: +45 63 12 83 00 | Email: ps@hymatik.com | www.hymatik.com | Hvidkaervej 27a, DK-5250 Odense SV, Denmark

O-ring

V1

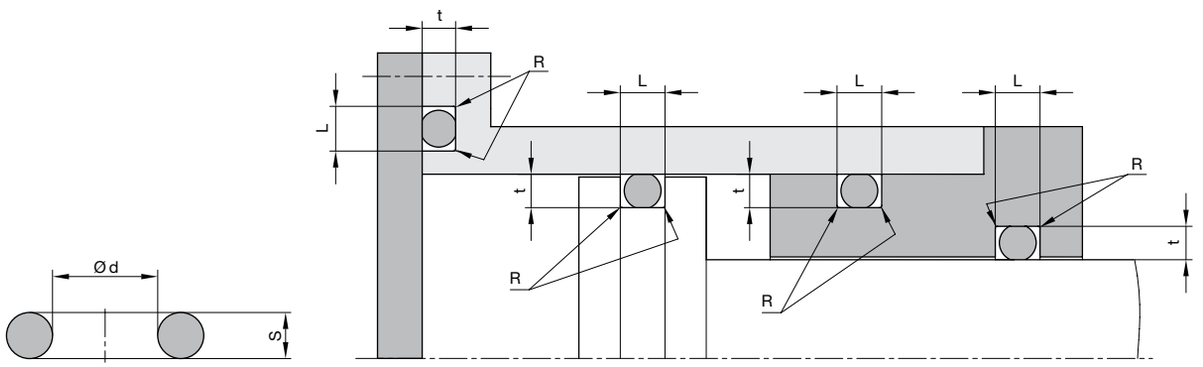

For surface finish, lead in chamfer and other installation dimensions see „General installation guidelines“.

d	S	Order code
17	2	V1 1520 P5008
17	3	V1 1530 P5008
17.12	2.62	V1 1556 P5008
18	2	V1 1575 P5008
18.2	3	V1 1615 P5008
18.4	2.7	V1 1622 P5008
18.64	3.53	V1 1638 P5008
18.72	2.62	V1 1640 P5008
19	2	V1 1670 P5008
19	2.5	V1 1675 P5008
19.2	3	V1 1730 P5008
19.3	2.4	V1 1740 P5008
19.4	2.1	V1 1947 P5008
20	2	V1 2015 P5008
20	2.5	V1 2020 P5008
20	3	V1 2025 P5008
20.3	2.4	V1 2105 P5008
21	3.53	V1 2141 P5008
21.3	2.4	V1 2167 P5008
21.3	3.6	V1 2170 P5008
21.82	3.53	V1 2181 P5008
21.95	1.78	V1 2195 P5008
22	1.5	V1 2204 P5008
22	2	V1 2208 P5008
22.2	3	V1 2255 P5008
23	2.5	V1 2273 P5008
23	3	V1 2278 P5008
23.47	2.62	V1 2313 P5008
24	2	V1 2330 P5008
24	2.5	V1 2335 P5008
24.99	3.53	V1 2394 P5008
25	2	V1 2405 P5008
25.2	3	V1 2477 P5008
26	2	V1 2497 P5008

d	S	Order code
26.2	3	V1 2540 P5008
27	2.5	V1 2575 P5008
28	2	V1 2620 P5008
28	3	V1 2630 P5008
28	4	V1 2640 P5008
28.24	2.62	V1 2664 P5008
29.2	3	V1 2742 P5008
29.74	2.95	V1 2764 P5008
29.87	1.78	V1 2780 P5008
30	2	V1 3010 P5008
30.3	2.4	V1 3073 P5008
31.54	3.53	V1 3145 P5008
32	2	V1 3158 P5008
32	3	V1 3168 P5008
32	4	V1 3178 P5008
33	2	V1 3220 P5008
33	3.5	V1 3235 P5008
34.2	3	V1 3351 P5008
34.52	3.53	V1 3361 P5008
34.59	2.62	V1 3355 P5008
35	2	V1 3370 P5008
35	3	V1 3380 P5008
35.2	3	V1 3415 P5008
36	2	V1 3430 P5008
36	3.53	V1 3446 P5008
37.69	3.53	V1 3579 P5008
38	2	V1 3595 P5008
39	2	V1 3650 P5008
39.2	3	V1 3683 P5008
40	2	V1 4015 P5008
40.2	3	V1 4077 P5008
40.64	5.33	V1 4086 P5008
44	3	V1 4305 P5008
45	3	V1 4400 P5008

Further sizes on request.

Tel: +45 63 12 83 00 | Email: ps@hymatik.com | www.hymatik.com | Hvidkaervej 27a, DK-5250 Odense SV, Denmark

O-ring

V1

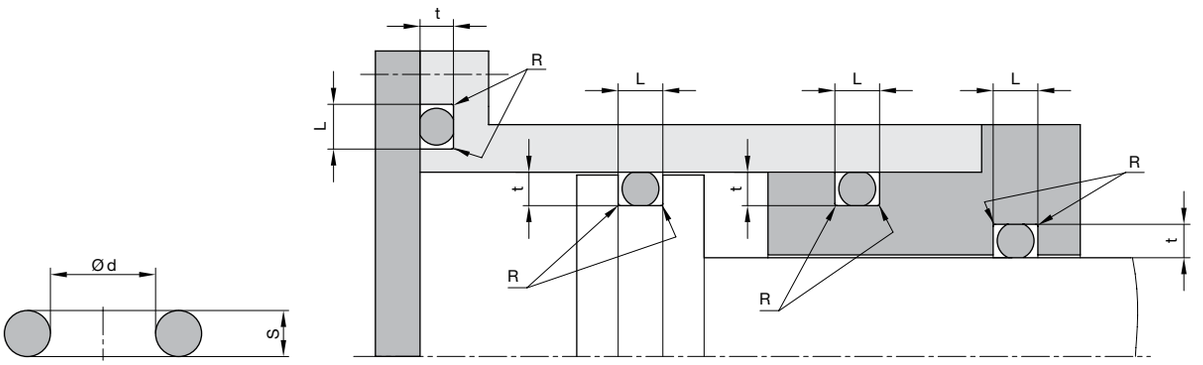

For surface finish, lead in chamfer and other installation dimensions see „General installation guidelines“.

d	S	Order code
46.99	5.33	V1 4514 P5008
48.9	2.62	V1 4645 P5008
50	2	V1 5015 P5008
50	3	V1 5025 P5008
50.16	5.33	V1 5066 P5008
50.2	3	V1 5069 P5008
53.34	5.33	V1 5274 P5008
54	3	V1 5300 P5008
55	4	V1 5360 P5008
56	3	V1 5410 P5008
56	6	V1 5422 P5008
59	3.53	V1 5580 P5008
59.69	5.33	V1 5604 P5008
60	3	V1 6020 P5008
60	4	V1 6030 P5008
60	5	V1 6040 P5008
64	3	V1 6285 P5008
65	5	V1 6370 P5008
66	5.33	V1 6443 P5018
68	3.53	V1 6551 P5008
69.21	5.33	V1 6655 P5008
69.52	2.62	V1 6677 P5008
70	3	V1 7020 P5008
70	5	V1 7040 P5008
75	3	V1 7340 P5008
75.8	3.53	V1 7391 P5008
80	3	V1 8020 P5008
80	5	V1 8040 P5008
82.14	3.53	V1 8168 P5008
85	5	V1 8275 P5008
89.2	5.7	V1 8485 P5008
90	5	V1 9040 P5008
91.4	5.33	V1 9113 P5008
95	5	V1 9330 P5008

d	S	Order code
100	5.33	V1 A043 P5008
100.97	5.33	V1 A089 P5008
110	5	V1 B030 P5008
110.49	5.33	V1 B066 P5008
112	6	V1 B117 P5008
114.6	5.7	V1 B216 P5008
116.84	6.99	V1 B297 P5030
120	4	V1 C030 P5008
120	5	V1 C040 P5008
124.6	5.7	V1 C307 P5008
129.54	5.33	V1 C480 P5008
130	5.33	V1 D039 P5008
134.6	5.7	V1 D185 P5008
135	5	V1 D205 P5008
151.77	6.99	V1 F085 P5030
152	5	V1 F123 P5008
158	5.7	V1 F292 P5008
178	5.7	V1 H240 P5008
202.57	6.99	V1 L073 P5008
225	5	V1 M135 P5008

Further sizes on request.

Tel: +45 63 12 83 00 | Email: ps@hymatik.com | www.hymatik.com | Hvidkaervej 27a, DK-5250 Odense SV, Denmark

Polon® Anti-extrusion ring

XA, XB, XC



Polon® anti-extrusion rings (back-up rings) are used for static and dynamic applications in connection with O-rings, to prevent extrusion of the O-ring into the diametral clearance.
The single cut and spiral design rings are easily installed into closed grooves while the single solid design, recommended for highest pressures, is for installation in open groove.

Polon®anti-extrusion rings for O-rings are available in three versions:

- XA: Single turn continuous
- XB: Single turn scarf cut
- XC: Spiral cut

- Insensitive to pressure peaks.
- High extrusion resistance.
- Excellent media resistance in case of suitable compound selection.
- Suitable compounds available for special requirements of the chemical process industry.
- Suitable compounds available for special requirements of the food processing industry.
- Any desired nominal diameter available due to use of machining technique.
- Installation in closed and undercut housings.

Range of Application

We recommend to specify anti-extrusion rings when at least one of the following working conditions is present in cases where the intention is to seal with O-rings only:

- Pressure above 70 bar (7MPa)
- Diametral clearance exceeding 0.25 mm at p > 10 bar (1MPa)
- High stroke frequency
- High temperatures
- Contaminated medium
- Strong pressure pulsing or pressure changes

Compounds

Polon® 001, unfilled PTFE.

Installation

In case of single-acting O-rings, it is sufficient to install only one anti-extrusion ring on the leeside of the O-rings. In case of double-acting sealing, two anti-extrusion rings are required.
Installation grooves should basically be produced with a rectangular cross-section (parallel side walls). If this for machining reasons is impossible, max. deviation of 5° is allowed.
A spiral anti-extrusion ring consists of two spiral windings which are cut at the ends and allows for compensating for large temperature variations and tolerances by means of a screw-like elongation or contraction. Only to be used in reciprocating applications.
In case of single-acting O-rings, it is sufficient to install only one anti-extrusion ring on the downstream side of the O-ring.
In case of a double-acting sealing function, two anti-extrusion rings are required at each side of the O-ring.
Installation grooves should preferably be made with parallel side walls. If for machining reasons this is not possible, a maximum deviation of 5° is allowed.
Anti-extrusion rings with concave face on the O-ring side are recommended in case of wide or out-of-tolerance bores and shafts. Additionally, this type of anti-extrusion ring extends the operating pressure of the O-ring and its specific shape tends to keep the O-ring round, even under high-pressure, resulting in better seal performance.

In case of special operating conditions (specific pressure loads, temperature, speed, use in water, HFA, HFB fluids etc.), please contact our consultancy service for a selection of the material and design best suiting your particular application requirements.

Tel: +45 63 12 83 00 | Email: ps@hymatik.com | www.hymatik.com | Hvidkaervej 27a, DK-5250 Odense SV, Denmark

Polon® Anti-extrusion ring

XA, XB, XC

[1] Scarf-cut rings are required for installation in partially or fully closed-grooves.
[2] XA: single solid, XB: single cut, XC: spiral cut

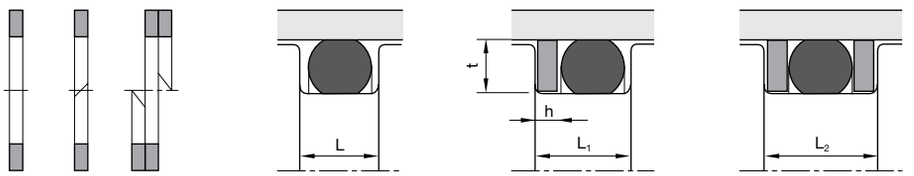

XA XB[1] XC[1]

For surface finish, lead in chamfer and other installation dimensions see „General installation guidelines“.

Housing dimensions

Series no.	Series no.	Series no.	Cross-section	O-ring cross-section	Anti-extrusion ring	Groove depth			Groove width		
						static	dynamic hydraulic	dynamic pneumatic	without anti-extrusion ring	one anti-extrusion ring	two anti-extrusion rings
						(X)	(Y)	(Z)			
XA	XB	XC		(mm)	h (mm)		t (mm)			L (mm)	
0901	0902	0903	A	1.78	$1.0^{\pm0.1}$	$1.30^{\pm0.05}$	$1.45^{\pm0.02}$	$1.55^{\pm0.02}$	$2.4^{+0.2}_{-0.0}$	$3.4^{+0.2}_{-0.0}$	$4.4^{+0.2}_{-0.0}$
0901	0902	0903	B	2.00	$1.0^{\pm0.1}$	$1.50^{\pm0.05}$	$1.65^{\pm0.02}$	$1.75^{\pm0.02}$	$2.7^{+0.2}_{-0.0}$	$3.7^{+0.2}_{-0.0}$	$4.7^{+0.2}_{-0.0}$
0901	0902	0903	C	2.40	$1.5^{\pm0.1}$	$1.85^{\pm0.05}$	$2.00^{\pm0.02}$	$2.10^{\pm0.02}$	$3.3^{+0.2}_{-0.0}$	$4.7^{+0.2}_{-0.0}$	$6.1^{+0.2}_{-0.0}$
0901	0902	0903	D	2.50	$1.5^{\pm0.1}$	$1.95^{\pm0.05}$	$2.10^{\pm0.02}$	$2.20^{\pm0.02}$	$3.4^{+0.2}_{-0.0}$	$4.9^{+0.2}_{-0.0}$	$6.4^{+0.2}_{-0.0}$
0901	0902	0903	E	2.62	$1.5^{\pm0.1}$	$2.05^{\pm0.05}$	$2.25^{\pm0.02}$	$2.35^{\pm0.02}$	$3.6^{+0.2}_{-0.0}$	$5.1^{+0.2}_{-0.0}$	$6.6^{+0.2}_{-0.0}$
0901	0902	0903	F	3.00	$1.5^{\pm0.1}$	$2.40^{\pm0.05}$	$2.55^{\pm0.02}$	$2.70^{\pm0.02}$	$4.2^{+0.2}_{-0.0}$	$5.7^{+0.2}_{-0.0}$	$7.2^{+0.2}_{-0.0}$
0901	0902	0903	G	3.53	$1.5^{\pm0.1}$	$2.85^{\pm0.07}$	$3.10^{\pm0.05}$	$3.25^{\pm0.05}$	$4.8^{+0.2}_{-0.0}$	$6.3^{+0.2}_{-0.0}$	$7.8^{+0.2}_{-0.0}$
0901	0902	0903	H	4.00	$1.5^{\pm0.1}$	$3.25^{\pm0.07}$	$3.50^{\pm0.05}$	$3.65^{\pm0.05}$	$5.4^{+0.2}_{-0.0}$	$6.9^{+0.2}_{-0.0}$	$8.4^{+0.2}_{-0.0}$
0901	0902	0903	I	5.00	$2.0^{\pm0.1}$	$4.15^{\pm0.10}$	$4.45^{\pm0.05}$	$4.65^{\pm0.05}$	$6.8^{+0.2}_{-0.0}$	$8.8^{+0.2}_{-0.0}$	$10.8^{+0.2}_{-0.0}$
0901	0902	0903	J	5.33	$2.0^{\pm0.1}$	$4.40^{\pm0.10}$	$4.70^{\pm0.05}$	$4.90^{\pm0.05}$	$7.2^{+0.2}_{-0.0}$	$9.2^{+0.2}_{-0.0}$	$11.2^{+0.2}_{-0.0}$
0901	0902	0903	K	5.70	$2.0^{\pm0.1}$	$4.70^{\pm0.10}$	$5.10^{\pm0.05}$	$5.30^{\pm0.05}$	$7.7^{+0.2}_{-0.0}$	$9.9^{+0.2}_{-0.0}$	$12.0^{+0.2}_{-0.0}$
0901	0902	0903	L	6.99	$2.5^{\pm0.1}$	$5.85^{\pm0.10}$	$6.25^{\pm0.05}$	$6.55^{\pm0.05}$	$9.6^{+0.2}_{-0.0}$	$12.1^{+0.2}_{-0.0}$	$14.6^{+0.2}_{-0.0}$
0901	0902	0903	M	8.40	$2.5^{\pm0.1}$	$7.00^{\pm0.10}$	$7.55^{\pm0.05}$	$7.90^{\pm0.05}$	$11.5^{+0.2}_{-0.0}$	$14.6^{+0.2}_{-0.0}$	$17.6^{+0.2}_{-0.0}$
0901	0902	0903	N	1.78	$1.4^{\pm0.1}$	$1.30^{\pm0.05}$	$1.45^{\pm0.02}$	$1.55^{\pm0.02}$	$2.4^{+0.2}_{-0.0}$	$3.8^{+0.2}_{-0.0}$	$5.2^{+0.2}_{-0.0}$
0901	0902	0903	O	2.00	$1.4^{\pm0.1}$	$1.50^{\pm0.05}$	$1.65^{\pm0.02}$	$1.75^{\pm0.02}$	$2.7^{+0.2}_{-0.0}$	$4.1^{+0.2}_{-0.0}$	$5.5^{+0.2}_{-0.0}$
0901	0902	0903	P	2.40	$1.4^{\pm0.1}$	$1.80^{\pm0.05}$	$2.05^{\pm0.02}$	$2.10^{\pm0.02}$	$3.2^{+0.2}_{-0.0}$	$4.6^{+0.2}_{-0.0}$	$6.0^{+0.2}_{-0.0}$
0901	0902	0903	Q	2.50	$1.4^{\pm0.1}$	$1.90^{\pm0.05}$	$2.15^{\pm0.02}$	$2.20^{\pm0.02}$	$3.3^{+0.2}_{-0.0}$	$4.7^{+0.2}_{-0.0}$	$6.1^{+0.2}_{-0.0}$
0901	0902	0903	R	2.62	$1.4^{\pm0.1}$	$2.00^{\pm0.05}$	$2.25^{\pm0.02}$	$2.35^{\pm0.02}$	$3.6^{+0.2}_{-0.0}$	$5.0^{+0.2}_{-0.0}$	$6.4^{+0.2}_{-0.0}$
0901	0902	0903	T	3.00	$1.4^{\pm0.1}$	$2.30^{\pm0.05}$	$2.60^{\pm0.02}$	$2.70^{\pm0.02}$	$4.0^{+0.2}_{-0.0}$	$5.4^{+0.2}_{-0.0}$	$6.8^{+0.2}_{-0.0}$
0901	0902	0903	U	3.53	$1.4^{\pm0.1}$	$2.70^{\pm0.07}$	$3.10^{\pm0.05}$	$3.25^{\pm0.05}$	$4.8^{+0.2}_{-0.0}$	$6.2^{+0.2}_{-0.0}$	$7.6^{+0.2}_{-0.0}$
0901	0902	0903	V	4.00	$1.4^{\pm0.1}$	$3.10^{\pm0.07}$	$3.50^{\pm0.05}$	$3.65^{\pm0.05}$	$5.5^{+0.2}_{-0.0}$	$6.9^{+0.2}_{-0.0}$	$8.6^{+0.2}_{-0.0}$
0901	0902	0903	W	5.00	$1.7^{\pm0.1}$	$4.00^{\pm0.10}$	$4.40^{\pm0.05}$	$4.65^{\pm0.05}$	$6.6^{+0.2}_{-0.0}$	$8.3^{+0.2}_{-0.0}$	$10.0^{+0.2}_{-0.0}$
0901	0902	0903	X	5.33	$1.7^{\pm0.1}$	$4.30^{\pm0.10}$	$4.70^{\pm0.05}$	$4.90^{\pm0.05}$	$7.1^{+0.2}_{-0.0}$	$8.8^{+0.2}_{-0.0}$	$10.5^{+0.2}_{-0.0}$
0901	0902	0903	Y	5.70	$1.7^{\pm0.1}$	$4.60^{\pm0.10}$	$5.00^{\pm0.05}$	$5.30^{\pm0.05}$	$7.2^{+0.2}_{-0.0}$	$8.9^{+0.2}_{-0.0}$	$10.6^{+0.2}_{-0.0}$
0901	0902	0903	Z	6.99	$2.5^{\pm0.1}$	$5.80^{\pm0.10}$	$6.10^{\pm0.05}$	$6.55^{\pm0.05}$	$9.5^{+0.2}_{-0.0}$	$12.0^{+0.2}_{-0.0}$	$14.5^{+0.2}_{-0.0}$

Tel: +45 63 12 83 00 | Email: ps@hymatik.com | www.hymatik.com | Hvidkaervej 27a, DK-5250 Odense SV, Denmark

Polon® Anti-extrusion ring

XA, XB, XC

[1] Scarf-cut rings are required for installation in partially or fully closed-grooves.
[2] XA: single solid, XB: single cut, XC: spiral cut

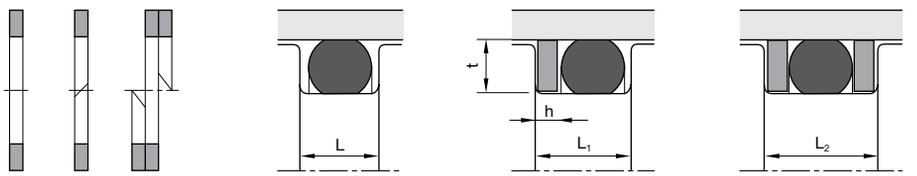

For surface finish, lead in chamfer and other installation dimensions see „General installation guidelines“.

Ordering example

Groove outer diameter 100 mm		
O-ring	2.5 mm	
Design	XA (endless)	
Application	static	
XA 1000 001 0901X D (96.1 × 100 × 1.5)		
XA	Profile	
1000	Groove outer diameter × 10	
001	Compound	
0901X	Series no.	
	0901X	static
	0901Y	dynamic hydraulic
	0901Z	dynamic pneumatic
D	Cross-section	

Tel: +45 63 12 83 00 | Email: ps@hymatik.com | www.hymatik.com | Hvidkaervej 27a, DK-5250 Odense SV, Denmark

Polon® Anti-extrusion ring

XA, XB, XC

[1] Scarf-cut rings are required for installation in partially or fully closed-grooves.
[2] *XA: single solid, XB: single cut, XC: spiral cut*

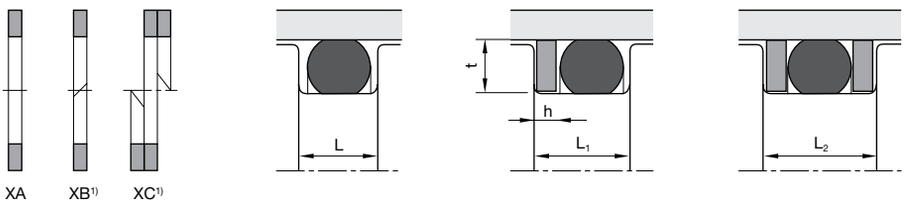

For surface finish, lead in chamfer and other installation dimensions see „General installation guidelines“.

Ordering example

Groove inner diameter 60 mm		
Groove outer diameter	OD = ID + 2S	
O-ring	5.33 mm	
Design	XB (single cut)	
Application	dynamic hydraulic	

XB 0694 001 0902Y J (60 × 69.4 × 2)		
XB	Profile	
0694	Groove outer diameter × 10	
001	Compound	
0902Y	Series no.	
	0902X	static
	0902Y	dynamic hydraulic
	0902Z	dynamic pneumatic
J	Cross-section	

Tel: +45 63 12 83 00 | Email: ps@hymatik.com | www.hymatik.com | Hvidkaervej 27a, DK-5250 Odense SV, Denmark

Static radial seal

HS



The HS static radial seal made of polyurethane compounds was developed as an alternative to conventionally used O-ring/back-up ring combinations for static sealing applications at high pressures. The robust, symmetrical seal geometry and the utilization of particularly extrusion-resistant Parker polyurethane compounds not only facilitates installation but increases sealing performance in conditions of pulsating pressures as well, resulting in clearly longer service life.
The benefits of the HS seal result from the serial configuration of the two sealing areas, which doubles the protection against leakage compared to a single seal. In addition, with two sealing areas or sealing edge pairs backing up the seal, exceptional protection against twisting of the seal is achieved, both during installation and in operation at pulsating pressures, for instance in combination with breathing components and coaxiality defects of the groove.
The use of particularly extrusion-resistant materials, especially the P6000 polyurethane compound with 94 Shore A hardness, eliminates the need for back-up rings.

- Robust seal profile for harshest operating conditions.
- Insensitive to pressure peaks.
- High extrusion resistance.
- Excellent media resistance in case of suitable compound selection.
- Suitable compounds available for special requirements of the chemical process industry.
- Suitable compounds available for special requirements of the food processing industry.
- Installation in closed and undercut housings.
- Additional sizes of machined products available on short notice.

Range of Application

The Ultrathan® seal HS is suitable for radial, static applications at high pressures such as hydraulic valves and cylinders, machine tools, injection-moulding machines.

Operating pressure	≤ 600 bar [1)]
Operating temperature	-35 °C to +110 °C

[1)] With reduced extrusion gap and suitable cross-section.

Compounds

Ultrathan® P6000 compound is a Parker material based on polyurethane with a hardness of approx. 94 Shore A.
For media containing water, we recommend our hydrolysis resistent compound P5001.

Installation

The seals should not be pulled over sharp edges during installation.
Normally these seals may be snapped into closed grooves. Where access is restricted special assembly tools may be required. Proposals for the design of such tools will be provided on request.

In case of special operating conditions (specific pressure loads, temperature, speed, use in water, HFA, HFB fluids etc.), please contact our consultancy service for a selection of the material and design best suiting your particular application requirements.

Tel: +45 63 12 83 00 | Email: ps@hymatik.com | www.hymatik.com | Hvidkaervej 27a, DK-5250 Odense SV, Denmark

Static radial seal

HS

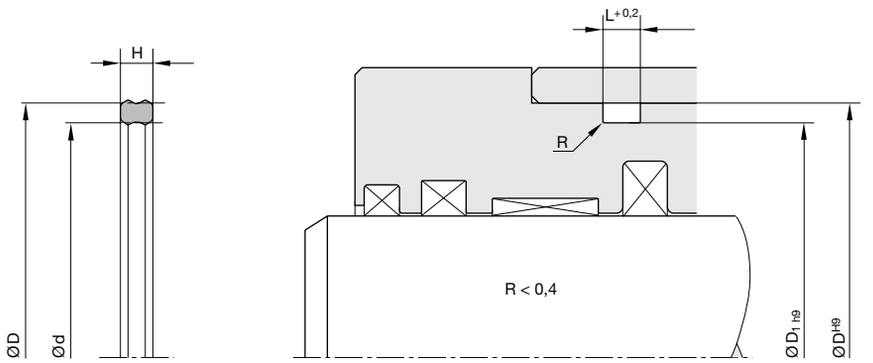

For surface finish, lead in chamfer and other installation dimensions see „General installation guidelines“.

D	D_1	H	L	Order code
31.75	27.6	4.8	5.8	HS 2731 P5009
32	27.8	3.84	4.7	HS 2732 P5009
36.5	32.4	2.8	3.2	HS 3632 P6000
39.67	35.3	3.84	4.7	HS 3539 P5009
40	34.4	4	5	HS 4034 P6000
42	36.4	4	5	HS 4236 P6000
48	42.3	4.3	5.3	HS 4840 P6000
48	43	3.2	4	HS 4843 P6000
50	44.4	4.6	5.6	HS 5044 P6000
52	32.3	3.84	4.7	HS 3252 P5009
55	50	4.3	5.3	HS 5550 P6000
57	52.2	3.3	4.1	HS 5752 P6000
60	54.3	4.6	5.6	HS 6054 P6000
63	57.4	4.2	5.2	HS 5763 P6000
65	59.4	4	5	HS 6559 P6000
68	62.7	4	5	HS 6862 P6000
70	65	4	5	HS 7065 P6000
72	66.4	4	5	HS 7266 P6000
75	69.4	4.6	5.6	HS 7569 P6000
76.2	70.2	4.8	5.8	HS 7670 P6000
80	73.6	6	7	HS 8073 P6000
80	74.4	4.8	5.8	HS 8074 P6000
84.7	78.58	4	5	HS 8478 P6000
85	79.4	4.5	5.5	HS 8579 P6000
90	83	5.5	6.5	HS 9083 P6000
100	94.5	4.7	5.7	HS A094 P6000
110	101.4	8	9	HS B110 P6000

Further sizes on request.

Tel: +45 63 12 83 00 | Email: ps@hymatik.com | www.hymatik.com | Hvidkaervej 27a, DK-5250 Odense SV, Denmark

Flange seal

OV



The OV flange seal made of polyurethane compounds was developed as an alternative to conventionally used O-ring/back-up ring combinations for static sealing at high pressures. The robust seal geometry and use of particularly extrusion-resistant Parker polyurethane compounds simplifies installation and enhances sealing performance in pulsating pressure conditions, resulting in significantly longer service life. The OV flange seal is particularly suitable for SAE flanges and inferior surface qualities of the flange components. Due to the interference fit, the geometric design of the flange seal prevents the otherwise frequent occurrence of O-ring "pumping."

Leakage which has been observed when O-rings are used can be attributed to a pressure buildup on the outer diameter which occurs with pressure surges and pressure fluctuations, frequently causing O-rings to be pulled out of their seats and being carried off by the fluid flow. This profile and the recommended groove prevent this effect. A radial movement and the wear it entails, which may occur with O-rings, is avoided by the special shape of the OV seal.

- Enhanced sealing performance in non-pressurized conditions.
- Insensitive to pressure peaks.
- Seal geometry prevents pressure build-up on low-pressure side in case of pressure peaks.
- High extrusion resistance.
- Excellent media resistance in case of suitable compound selection.
- Suitable compounds available for special requirements of the chemical process industry.
- Suitable compounds available for special requirements of the food processing industry.
- Installation in closed and undercut housings.
- Interference fit on the outer diameter enables overhead installation.
- Additional sizes of machined products available on short notice.

Range of Application

Static seal for SAE flanges.

Operating pressure	≤ 600 bar
Operating temperature	-35 °C to +100 °C

Compounds

Ultrathan® P5008 is a polyurethane-based Parker compound with a hardness of approx. 93 Shore A. In comparison with other polyurethane materials currently available on the market it excels because of its increased heat resistance, improved performance against hydrolysis, and low compression set values.

Installation

The installation groove at the back of the sealing element must be ventilated. The peak-to-valley height of the seal orientated plate surface must be $R_t \leq 6.3$ µm, whereas the plate with the countersink must have a peak-to-valley height of $R_t = 2030$ µm, e.g. obtained by milling according to DIN 3142 B5-P4. If there are several passage bores, additional ventilation channels can be provided between the oil supply bores.

In case of special operating conditions (specific pressure loads, temperature, speed, use in water, HFA, HFB fluids etc.), please contact our consultancy service for a selection of the material and design best suiting your particular application requirements.

Tel: +45 63 12 83 00 | Email: ps@hymatik.com | www.hymatik.com | Hvidkaervej 27a, DK-5250 Odense SV, Denmark

Flange seal

OV

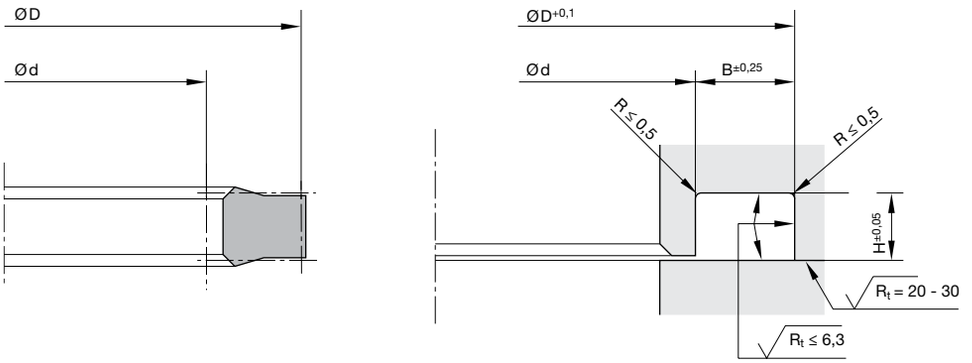

For surface finish, lead in chamfer and other installation dimensions see „General installation guidelines“.

d	D	H	B	SAE flange size	Order code
17	25.4	2.85	4.2	½″	OV 1704 P5008
23.4	31.8	2.85	4.2	¾″	OV 2308 P5008
26.3	33.5	2.2	3.6	-	OV 2630 P5008
31.3	39.7	2.85	4.2	1″	OV 3106 P5008
36.1	44.5	2.85	4.2	1¼″	OV 3605 P5008
45.4	53.8	2.85	4.2	1½″	OV 4527 P5008
55	63.4	2.85	4.2	2″	OV 5540 P5008
67.8	76.2	2.85	4.2	2½″	OV 6776 P5008
83.55	91.95	2.85	4.2	3″	OV 8355 P5008

Further sizes on request.

Tel: +45 63 12 83 00 | Email: ps@hymatik.com | www.hymatik.com | Hvidkaervej 27a, DK-5250 Odense SV, Denmark

Rotary seals

Precision seals for rotary applications

The construction machinery and general mobile equipment industries require efficient rotary transmissions for hydraulic fluids. This applies in all cases where the use of hoses is not practicable for reasons of safety, function or lack of space.

Parker took into consideration the compact design of these rotary transmissions and designed equally compact sealing elements which can be snapped into simple grooves.
There are two different types of rotary seals: For the stator with dynamic sealing on the inside, and for the rotor with dynamic sealing on the outside diameter of the seal.
Care must be taken to ensure that the high pressure channels are placed towards the center, while the return, the low pressure, the control, and the leakage channels are placed towards the end (atmospheric side) of the rotor. This will ensure that the highly stressed high pressure seals are lubricated and cooled from both sides, and that no contamination may penetrate from outside. Due to the reciprocal pressure load, the back-up rings will also be sufficiently lubricated.
As the end seals are subjected to low pressure only, the problem of contamination and abrasion is here of minor importance.

Please contact our application engineering department before installing a continuously rotating transmission.

The P · v-value
It is a basic principle that the higher the operating pressure, the lower the allowable peripheral speed, and vice versa. In this context, the characteristic value P · v should be mentioned. As a product of pressure [bar] and speed [m/s], it marks the upper limit of allowable loading.
The P · v-value varies for different types of seals and is stated for every profile on the respective catalogue page (working conditions).

These values represent an estimation on the basis of many years of experience, and are based on normal operating conditions. Expressed in another way, in isolated cases these values can be considerably lower, e.g. when the temperature is very high or when a very poor lubricant is used. Additionally, the prescribed limits regarding pressure and speed must be observed.

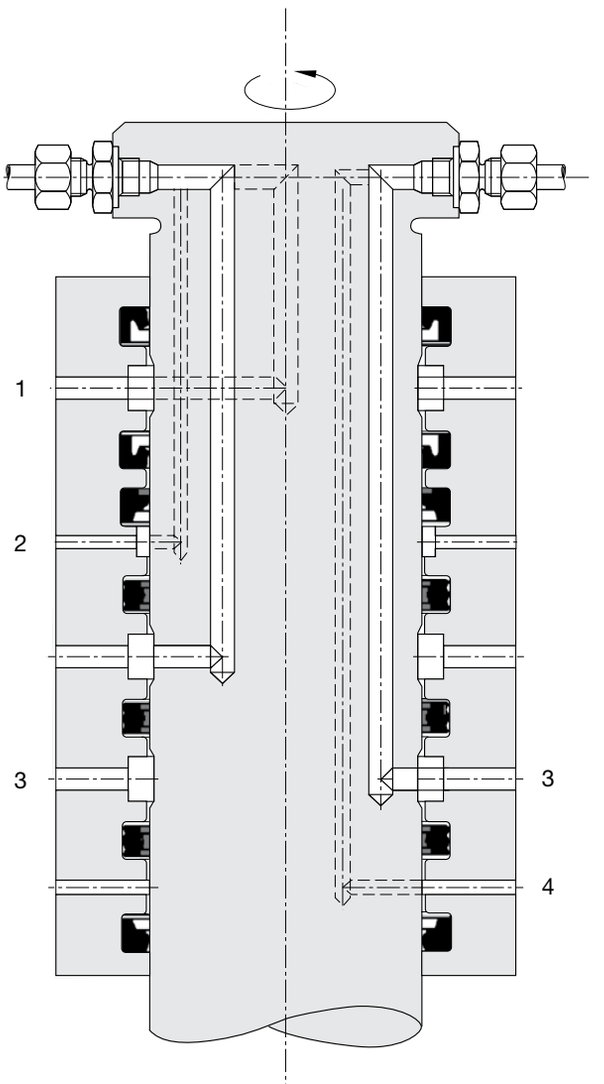

1 = Pneumatic pressure
2 = Pilot pressure
3 = System pressure
4 = Drain or return pressure

Tel: +45 63 12 83 00 | Email: ps@hymatik.com | www.hymatik.com | Hvidkaervej 27a, DK-5250 Odense SV, Denmark

Rotary sealing set

KA



The KA rotary sealing set is a compact seal for sealing the high-pressure channels of rotary transmissions. It consists of a rubber element with a fabric-reinforced running surface and two anti-extrusion rings. They increase stability and prevent extrusion into the gap which due to the rotary motion (eccentricity) is variable in most cases. Due to the special shape of the dynamic sealing area, a lubricant deposit is formed which ensures the preservation of the liquid film and thereby prevents dry running.

- Enhanced sealing performance in non-pressurized conditions.
- Robust seal profile for harshest operating conditions.
- Extreme wear resistance.
- Insensitive to pressure peaks.
- High temperature resistance in case of suitable compound selection.
- Extremely high extrusion resistance.
- Installation in closed and undercut housings.

Range of Application

Mainly for applications where the pressure alternates from one side of the seal to the other, such as pivots for rotating track rings, swivel joints, hose reels, and in machine tool hydraulics.

Operating pressure

≤ 60 °C	≤ 400 bar
≤ 80 °C	≤ 315 bar
≤ 100 °C	≤ 250 bar
Operating temperature	-30 °C to +100 °C
Sliding speed	≤ 0.2 m/s

Recommendation for rotary transmissions: $P \cdot v \leq 50$
(For definition see catalogue „Hydraulic Seals", chapter „Rotary seals", introduction.)

Compounds

Standard compound for the sealing part is a NBR-based elastomer with fabric-reinforced dynamic surface (Z5011/Z5014). The back-up rings are made of a polyamid-based material.

Installation

The profile KA rotary sealing sets are designed to be snapped into closed grooves. Special versions for open grooves in end-seal applications are available. During installation, first the sealing part must be installed, followed by the back-up ring. To avoid damaging the seal, sharp edges within the installation area should be removed.

In case of special operating conditions (specific pressure loads, temperature, speed, use in water, HFA, HFB fluids etc.), please contact our consultancy service for a selection of the material and design best suiting your particular application requirements.

Tel: +45 63 12 83 00 | Email: ps@hymatik.com | www.hymatik.com | Hvidkaervej 27a, DK-5250 Odense SV, Denmark

Rotary sealing set

KA

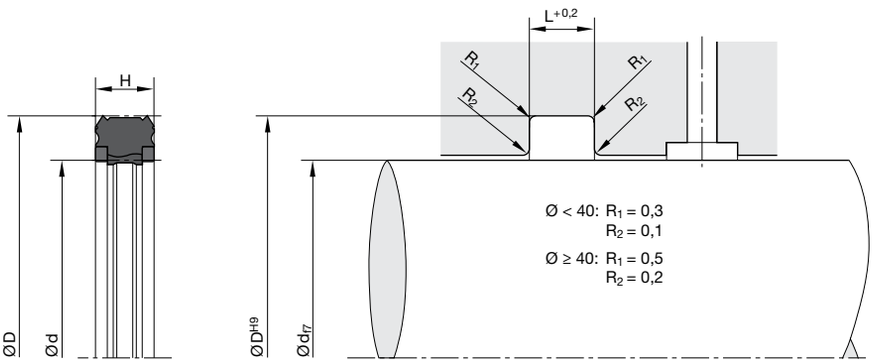

For surface finish, lead in chamfer and other installation dimensions see „General installation guidelines“.

d	D	H	L	Order code
30	42	6	7	KA 0030 00650
50	62	7.5	8.5	KA 0050 00650
65	77	6	7	KA 0065 00650
89	106	8.5	9.5	KA 0089 00650
90	106	10	11	KA 0092 00650
90	110	10	11	KA 0090 00650
90	110	12	13	KA 0093 00650
95	112	10	11	KA 0087 00650
95	115	11	12	KA 0088 00650
100	120	12	13	KA 0101 00650
109	129	10	11	KA 0109 00650
110	130	10	11	KA 0110 00650
130	145	10	11	KA 0128 00650
160	180	10	11	KA 0161 00650
180	200	10	11	KA 0181 00650
200	220	10	11	KA 0200 00650
210	235	12.5	13.5	KA 0211 00650

Further sizes on request.

Tel: +45 63 12 83 00 | Email: ps@hymatik.com | www.hymatik.com | Hvidkaervej 27a, DK-5250 Odense SV, Denmark

Slipper Seal® Rotary sealing set OR



The internally sealing OR sealing set featuring a Slipper Seal® design consists of a PTFE rotor sealing ring and an elastomer O-ring as a pre-loading element.
It is particularly suitable for alternating sealing of rotary transmissions for slewing rings, swivel drives, hose reels, and in machine tool hydraulics. If the sealing set is used as an end seal, it is recommended to install a double wiper ring at the end of the components. Due to the special operating conditions of rotary transmissions, the OR rotor sealing sets are provided with one or two circumferential lubrication grooves. Due to the material combination of the slide ring (PTFE) and O-ring (elastomer), this product is suitable for a wide range of applications, especially for aggressive media and/or high temperatures. Alternatively, several compounds can be selected, depending on the specific applications profile.

- Good sealing performance in extremely small assembly conditions.
- Excellent wear resistance.
- Minimal break-away and dynamic friction and no stick-slip tendency ensures uniform motion even at low speeds.
- Good energy efficiency due to low friction.
- Insensitive to pressure peaks.
- High temperature resistance assured by suitable O-ring compound selection.
- Improved lubrication due to pressure medium deposit in the dynamic contact area.
- High extrusion resistance.
- Adaptable to nearly all media thanks to high chemical resistance of the sealing ring and large O-ring compound selection.
- Short axial assembly length.
- Installation in closed and undercut housings.
- Available in diameters from 4 to 4500 mm.
- Additional sizes of machined products available on short notice.

Range of Application

Operating pressure	≤ 300 bar
Operating temperature	-30 °C to +100 °C [1)]
Sliding speed	≤ 1 m/s

Recommendation for rotary transmissions: P × v ≤ 25 (40)
(For definition see catalogue „Hydraulic Seals“, chapter „Rotary Seals“, introduction.)

[1)] With deviation from standard temperature range, please contact our consultancy service for adequate O-ring compound.

Compounds

Sealing ring: Polon® 033, PTFE + 25 % carbon.
O-ring: N0674, NBR elastomer with approx. 70 Shore A.

Installation

For diameters < 30 mm open grooves are required.
This seal should only be used in combination with closed guiding elements.

In case of special operating conditions (specific pressure loads, temperature, speed, use in water, HFA, HFB fluids etc.), please contact our consultancy service for a selection of the material and design best suiting your particular application requirements.

Tel: +45 63 12 83 00 | Email: ps@hymatik.com | www.hymatik.com | Hvidkaervej 27a, DK-5250 Odense SV, Denmark

Slipper Seal® Rotary sealing set

OR

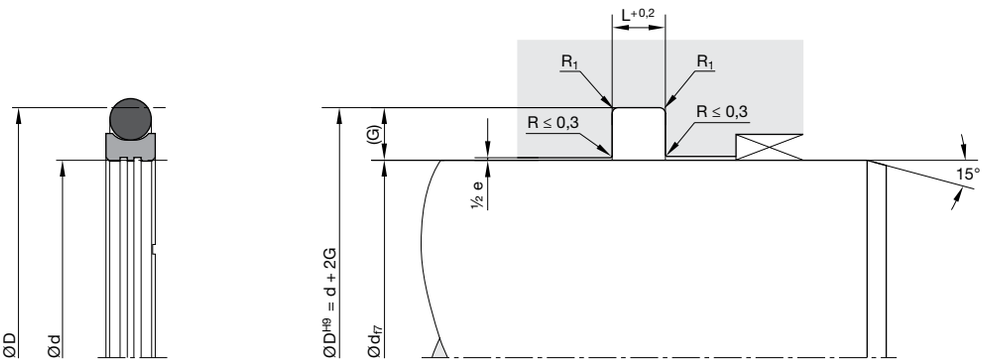

For surface finish, lead in chamfer and other installation dimensions see „General installation guidelines“.

Housing dimensions

Series no.	Cross-section	O-ring cross-section (mm)	Recommended shaft Ø range d (mm) ≥,	d (mm) <,	Groove width L (mm)	Groove depth G (mm)	Gap max. 0200 bar e (mm)	Gap max. 200-400 bar e (mm)	Radius max. R_1 (mm)
00160	A	1.78	4	8	2.2	2.45	0.4 - 0.2	0.2 - 0.1	0.5
00160	B	2.62	8	19	3.2	3.75	0.4 - 0.2	0.2 - 0.1	0.5
00160	C	3.53	19	38	4.2	5.50	0.6 - 0.3	0.3 - 0.2	0.5
00160	D	5.33	38	200	6.3	7.75	0.8 - 0.4	0.4 - 0.2	0.9
00160	E	6.99	200	256	8.1	10.50	1 - 0.5	0.5 - 0.3	0.9
00160	F	6.99	256	650	8.1	12.25	1 - 0.5	0.5 - 0.3	0.9
00160	G	8.40	650	1000	9.5	14.00	1 - 0.5	0.5 - 0.3	0.9

Tel: +45 63 12 83 00 | Email: ps@hymatik.com | www.hymatik.com | Hvidkaervej 27a, DK-5250 Odense SV, Denmark

Slipper Seal® Rotary sealing set OR

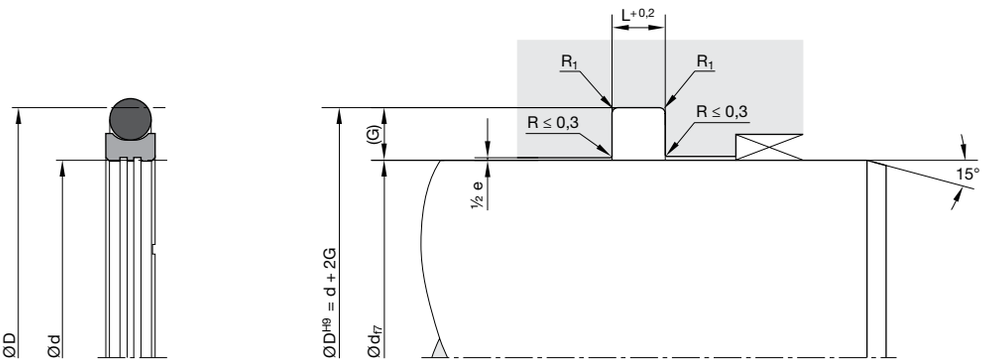

For surface finish, lead in chamfer and other installation dimensions see „General installation guidelines“.

Ordering example

Shaft diameter 80 mm

OR 0800 033 00161 D (80 × 95.5 × 6.3)

OR	Profile			
0800	Shaft diameter × 10			
033	Compound			
00161	Series no. / compound code O-ring			
	00160	without O-ring		
	00161	N0674 (NBR)	70±5 Shore A	-30 / +110 °C
	00162	V0747 (FKM)	75±5 Shore A	-25 / +200 °C
	00163	N0756 (NBR)	75±5 Shore A	-50 / +110 °C
	00164	E0540 (EPDM)	80±5 Shore A	-30 / +110 °C
	00165	N3578 (NBR)	75±5 Shore A	-30 /+110 °C
	00166	N0552 (NBR)	90±5 Shore A	-30 / +100 °C
	00167	N1173 (HNBR)	70±5 Shore A	-30 / +150 °C
D	Cross-section			

Please note:
For certain applications, it might be convenient to use a non-standard cross-section reduced or heavier. In these cases, please replace the standard cross-section code (in above example: „D“) by the one you require (for example „C“ or „E“).

Tel: +45 63 12 83 00 | Email: ps@hymatik.com | www.hymatik.com | Hvidkaervej 27a, DK-5250 Odense SV, Denmark

Slipper Seal® Rotary sealing set

OR

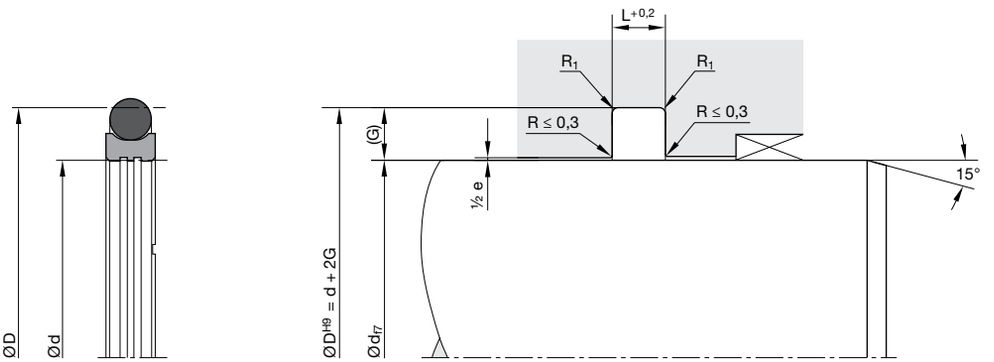

For surface finish, lead in chamfer and other installation dimensions see „General installation guidelines“.

Standard range

Size	Groove			O-ring		
	Ø d	Ø D	L	No.	CS	ID
	(mm)	(mm)	(mm)		(mm)	(mm)
0040	4	8.90	2.20	2-010	1.78	6.07
0060	6	10.90	2.20	2-011	1.78	7.65
0080	8	12.90	3.20	2-012	1.78	9.25
0100	10	14.90	3.20	2-013	1.78	10.82
0120	12	16.90	3.20	2-015	1.78	14.00
0140	14	18.90	3.20	2-016	1.78	15.60
0160	16	20.90	3.20	2-017	1.78	17.17
0170	17	21.90	3.20	2-018	1.78	18.77
0180	18	22.90	3.20	2-019	1.78	20.35
0190	19	26.50	4.20	2-118	2.62	21.89
0200	20	27.50	4.20	2-119	2.62	23.47
0220	22	29.50	4.20	2-120	2.62	25.07
0240	24	31.50	4.20	2-121	2.62	26.64
0250	25	32.50	4.20	2-122	2.62	28.24
0270	27	34.50	4.20	2-123	2.62	29.82
0280	28	35.50	4.20	2-124	2.62	31.41
0300	30	37.50	4.20	2-125	2.62	32.99
0320	32	39.50	4.20	2-126	2.62	34.59
0330	33	40.50	4.20	2-127	2.62	36.17
0350	35	42.50	4.20	2-128	2.62	37.77
0360	36	43.50	4.20	2-129	2.62	39.34
0370	37	44.50	4.20	2-130	2.62	40.94
0380	38	49	6.30	2-223	3.53	40.87
0400	40	51	6.30	2-224	3.53	44.04
0420	42	53	6.30	2-225	3.53	47.22
0450	45	56	6.30	2-226	3.53	50.39
0480	48	59	6.30	2-227	3.53	53.57
0500	50	61	6.30	2-228	3.53	56.74

Size	Groove			O-ring		
	Ø d	Ø D	L	No.	CS	ID
	(mm)	(mm)	(mm)		(mm)	(mm)
0550	55	66	6.30	2-229	3.53	59.92
0600	60	71	6.30	2-230	3.53	63.09
0630	63	74	6.30	2-231	3.53	66.27
0650	65	76	6.30	2-232	3.53	69.44
0700	70	81	6.30	2-233	3.53	72.62
0750	75	86	6.30	2-235	3.53	78.97
0800	80	91	6.30	2-237	3.53	85.32
0850	85	96	6.30	2-238	3.53	88.49
0900	90	101	6.30	2-240	3.53	94.84
0950	95	106	6.30	2-242	3.53	101.19
1000	100	111	6.30	2-243	3.53	104.37
1100	110	121	6.30	2-246	3.53	113.89
1200	120	131	6.30	2-249	3.53	123.42
1300	130	141	6.30	2-252	3.53	132.94
1400	140	151	6.30	2-255	3.53	142.47
1500	150	161	6.30	2-258	3.53	151.99
1600	160	171	6.30	2-260	3.53	164.69
1700	170	181	6.30	2-261	3.53	171.04
1800	180	191	6.30	2-263	3.53	183.74
1900	190	201	6.30	2-264	3.53	190.09
2000	200	215.50	8.10	2-369	5.33	202.57
2100	210	225.50	8.10	2-371	5.33	215.27
2200	220	235.50	8.10	2-372	5.33	221.62
2300	230	245.50	8.10	2-374	5.33	234.32
2400	240	255.50	8.10	2-375	5.33	240.67
2500	250	265.50	8.10	2-377	5.33	253.37
2560	256	277	8.10	2-449	6.99	253.37
2600	260	281	8.10	2-450	6.99	266.07

Further sizes on request.

Tel: +45 63 12 83 00 | Email: ps@hymatik.com | www.hymatik.com | Hvidkaervej 27a, DK-5250 Odense SV, Denmark

Slipper Seal® Rotary sealing set

OR

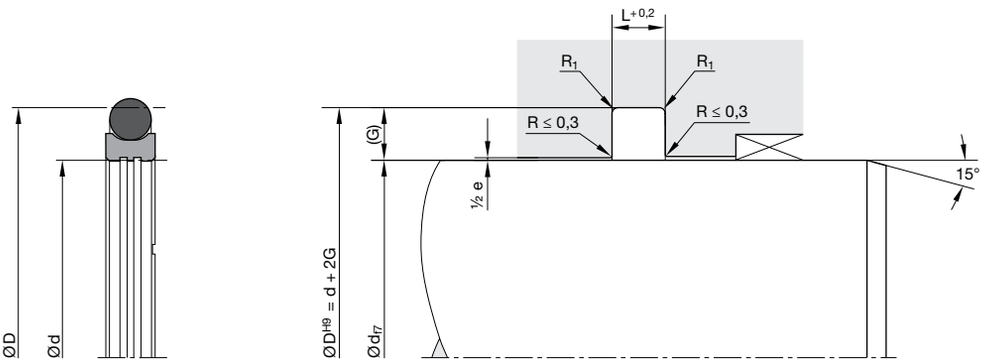

For surface finish, lead in chamfer and other installation dimensions see „General installation guidelines“.

Standard range

Size	Groove			O-ring		
	Ø d (mm)	Ø D (mm)	L (mm)	No.	CS (mm)	ID (mm)
2700	270	291	8.10	2-451	6.99	278.77
2800	280	301	8.10	2-451	6.99	278.77
2900	290	311	8.10	2-452	6.99	291.47
3000	300	321	8.10	2-453	6.99	304.17
3100	310	331	8.10	2-454	6.99	316.87
3200	320	241	8.10	2-455	6.99	329.57
3300	330	351	8.10	2-456	6.99	342.27
3400	340	361	8.10	2-457	6.99	354.97
3500	350	371	8.10	2-457	6.99	354.97
3600	360	281	8.10	2-458	6.99	367.67
3700	370	391	8.10	2-459	6.99	380.37
3800	380	401	8.10	2-460	6.99	393.07
3900	390	411	8.10	2-461	6.99	405.26
4000	400	421	8.10	2-461	6.99	405.26
4200	420	431	8.10	2-462	6.99	430.66
4500	450	471	8.10	2-465	6.99	456.06
4700	470	491	8.10	2-467	6.99	481.46
5000	500	521	8.10	2-469	6.99	506.86
5300	530	551	8.10	2-470	6.99	532.26
5500	550	571	8.10	2-471	6.99	557.66
5800	580	601	8.10	2-472	6.99	582.68
6000	600	621	8.10	2-473	6.99	608.08
6200	620	641	8.10	2-473	6.99	608.08
6400	640	661	8.10	2-474	6.99	633.48
6500	650	678	9.50	-	8.40	649
8000	800	828	9.50	-	8.40	810

Further sizes on request.

Tel: +45 63 12 83 00 | Email: ps@hymatik.com | www.hymatik.com | Hvidkaervej 27a, DK-5250 Odense SV, Denmark

Rotary sealing set

RS



The RS rotary sealing set consists of a high-strength thermoplastic slide ring with particularly stable thermal properties and an elastomer preloading element. The special contact surface geometry at the inner diameter of the slide ring with the patented (EP 0 643 243 B2) alternating pitch has a major benefical effect on the lubrication of the seal. This has a positive impact on both friction and wear. The preloading element responsible for the static sealing function has a rectangular cross section. Compared to O-rings, this has advantages with regard to contact load (sealing) and deformation behavior (pumping inside the groove). The dynamic interior sealing method is preferable. We do not recommend a dynamic exterior sealing arrangement. The slide ring compound used and its geometry allow use of the seal even under maximum permissible pressure (and in case of pressure peaks) without requiring additional anti-extrusion rings. At the same time, it is possible to take maximum advantage of the diameter play between rotor and stator without any functional impairment. In principle, the seal can also be used as an exterior end seal. In case of doubt, however, we recommend our C5 or C9 product series.

- Enhanced sealing performance in non-pressurized conditions.
- Robust seal profile for harshest operating conditions.
- Extreme wear resistance.
- Long service life thanks to application-optimized compounds.
- Insensitive to pressure peaks.
- Improved lubrication due to pressure medium deposit in the dynamic contact area.
- Extremely high extrusion resistance.
- Installation in closed and undercut housings.

Range of Application

Primarily for alternating sealing of rotary applications in rotating tracks, pivot drives, hose reels, and in machine tool hydraulics.

Operating pressure	≤ 500 bar
Operating temperature	-35 °C to +100 °C
Sliding speed	≤ 0.5 m/s

Recommendation for rotary transmissions:
P × v ≤ 40 for L = 4.1 to 4.2
P × v ≤ 70 for L = 6.0 to 6.3
(For definition see catalogue „Hydraulic Seals“, chapter „Rotary Seals“, introduction.)

Compounds

The standard compound for the slide ring is a thermoplastic compound (W5071) with outstanding physical properties.
The expander ring consists of our tried and proven standard NBR compound N3571 with 70 Shore A. For higher temperatures, we recommend HNBR compounds.

Installation

The axial fit of the seal is especially narrow and suitable for grooves conforming to DIN ISO 7425. This benefits the total installation length of the rotary transmissions. By selecting suitable compounds, snap installation depending on profile width down to rotor diameter of app. 30 mm is possible. Below that, we recommend axially open grooves for installation.

In case of special operating conditions (specific pressure loads, temperature, speed, use in water, HFA, HFB fluids etc.), please contact our consultancy service for a selection of the material and design best suiting your particular application requirements.

Rotary sealing set

RS

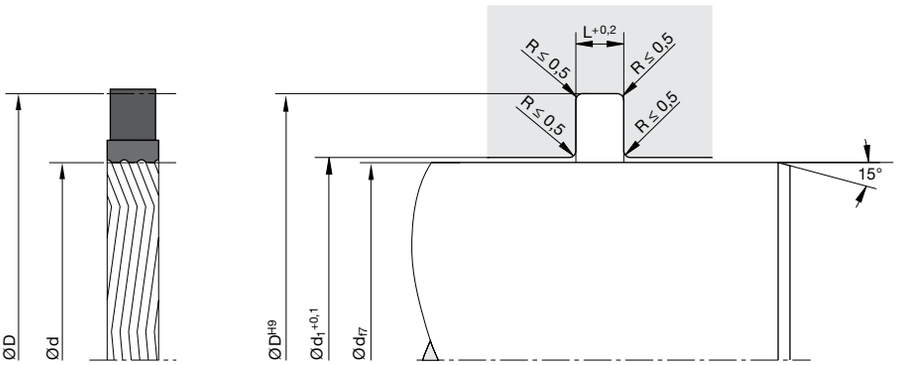

For surface finish, lead in chamfer and other installation dimensions see „General installation guidelines“.

d	D	L	Order code
25	32.5	3.2	RS 0025 00716
45	51.6	4.1	RS 0045 00716
50	61	4.1	RS 0050 00716
55	61.6	4.1	RS 0055 00716
60	71	4.1	RS 0060 00716
80	91	4.1	RS 0080 00716
95	110.5	6.3	RS 0095 00716
100	111	4.1	RS 0100 00716
105	120.4	6.2	RS 0105 00716
110	121	4.2	RS 0110 00716
124	139.2	6.1	RS 0124 00716
125	135.4	5.1	RS 0125 00716
145	160	6.2	RS 0145 00716
170	185.2	6.2	RS 0170 00716
250	265.5	6.3	RS 0250 00716

Further sizes on request.

Tel: +45 63 12 83 00 | Email: ps@hymatik.com | www.hymatik.com | Hvidkaervej 27a, DK-5250 Odense SV, Denmark

Sealing set for piston accumulators KS

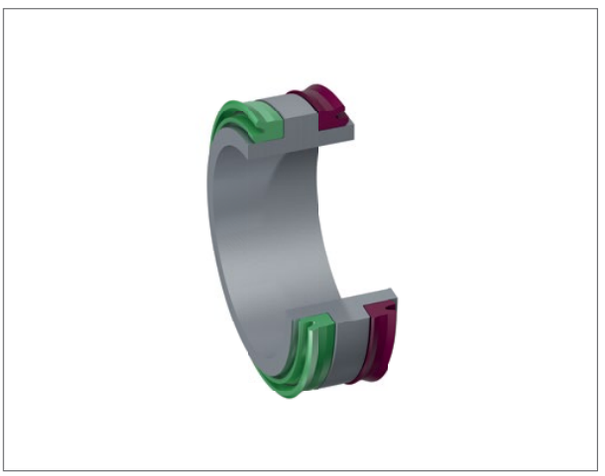

The KS piston sealing set made of wear-resistant Ultrathan® has been developed specifically for sealing floating pistons in dual media piston-type accumulators. It consists of two U-rings with differences in terms of design and compound. The shape of the seals makes the KS piston sealing set ideally suited for reliable, low-friction separation of different pressure fluids (oil/gas). Other applications include industrial shock absorbers and hydro-pneumatic elements such as feed and braking units, pressure converters, pressure transducers and working cylinders.

- Robust seal profile for harshest operating conditions.
- Extreme wear resistance.
- Assembly on one-part piston is possible.
- High extrusion resistance.
- Excellent media resistance in case of suitable compound selection.
- Suitable compounds available for special requirements of the chemical process industry.
- Suitable compounds available for special requirements of the food processing industry.
- Dimensions according to ISO 5597.
- Installation in closed and undercut housings.
- Additional sizes of machined products available on short notice.

Range of Application

Operating pressure	≤ 350 bar
Operating temperature	-30 °C to +80 °C
Sliding speed	≤ 3 m/s
Media	Hydraulic oils based on mineral oil and gases

Compounds

Parker polyurethane Ultrathan® P5008 is used for the oil side seal and polyurethane Ultrathan® P5010 is used for the gas side. When compared to commercial polyurethanes both these compounds have a superior resistance to high temperature and lower compression set values.

Installation

The performance of profile KS piston seal set is only guaranteed when the green colour seal (KH ... P5008) is installed on the oil side of the piston and the red colour seal (KG ... P5010) on the gas side. The general recommendations as shown in our hydraulics brochure are applicable to the housing groove and seal installation, e. g. no sharp edges, no sharp tools, clean components, etc.

In case of special operating conditions (specific pressure loads, temperature, speed, use in water, HFA, HFB fluids etc.), please contact our consultancy service for a selection of the material and design best suiting your particular application requirements.

Tel: +45 63 12 83 00 | Email: ps@hymatik.com | www.hymatik.com | Hvidkaervej 27a, DK-5250 Odense SV, Denmark

Sealing set for piston accumulators

KS

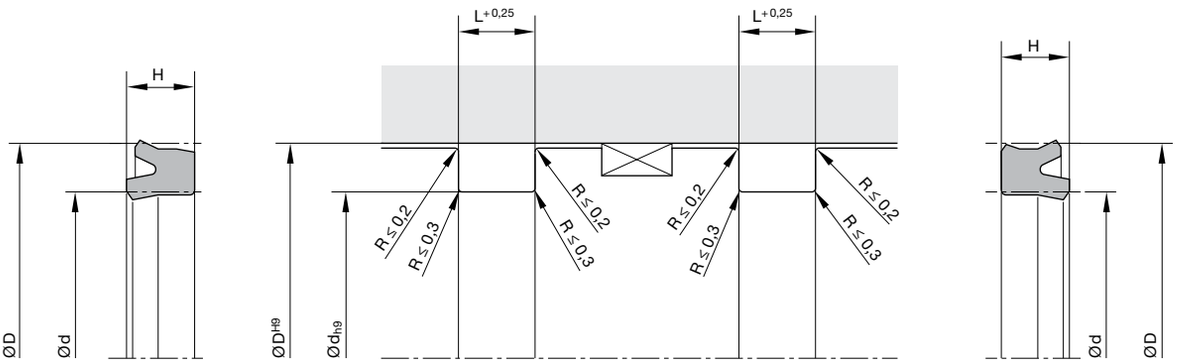

For surface finish, lead in chamfer and other installation dimensions see „General installation guidelines“.

D	d	H	L	ISO[1)]	Order code
40	32	5.7	6.3	·	KS 0040 00710
50	40	7.3	8	·	KS 0050 00710
63	53	7.3	8	·	KS 0063 00710
80	65	11.4	12.5	·	KS 0080 00710
85.73	70.73	11.4	12.5		KS 0086 00710
100	85	11.4	12.5	·	KS 0100 00710
160	140	14.5	16	·	KS 0160 00714
180	160	14.5	16		KS 0180 00710

1) ISO 5597
Further sizes on request.

Tel: +45 63 12 83 00 | Email: ps@hymatik.com | www.hymatik.com | Hvidkaervej 27a, DK-5250 Odense SV, Denmark

Parker Prädifa

www.parker.com/praedifa

PTD 3350 EN • 02/2026

© 2026 Parker Hannifin EMEA Sarl. All Rights Reserved.