









O-Ring Guide



Parker Prädifa

ENGINEERING YOUR SUCCESS.

Contents

Parker´s safety programme	4
Introduction	6
Sealing compounds	9
Deformation force	25
Design information and installation guidelines	31
O-ring dimension	41
Parbak®-back-up ring 8-xxx sizes	87

Tel: +45 63 12 83 00 | Email: ps@hymatik.com | www.hymatik.com | Hvidkaervej 27a, DK-5250 Odense SV, Denmark

Warning - user responsibility

This document and other information from Parker Hannifin Corporation, its subsidiaries and authorized distributors provide product or system options for further investigation by users having technical expertise.

The user, through its own analysis and testing, is solely responsible for making the final selection of the system and components and assuring that all performance, endurance, maintenance, safety and warning requirements of the application are met. The user must analyze all aspects of the application, follow applicable industry standards, and follow the information concerning the product in the current product catalogue and in any materials provided by Parker or its subsidiaries or authorized distributors.
To the extent that Parker or its subsidiaries or authorized distributors provide component or system options based upon data or specifications provided by the user, the user is responsible for determining that such data and specifications are suitable and sufficient for all applications and reasonsibly foreseeable uses of the components or systems.

Range of application

Our seals may only be used within the application parameters stated in our documents as regards compatibility with contact media, pressures, temperatures and time of storage. Application or use outside of the specified application parameters as well as the selection of different compounds by mistake may result in damage to life, the environment and/or equipment and facilities.

The information contained in our publications is based on know-how developed over decades of experience in the manufacturing and application of seals. Despite this experience, unknown factors arising out of the practical application of seals may considerably affect the overall applicability of this information in such a way that the recommendations provided herein are not to be considered generally binding.

The data for operating pressure, operating temperature, and surface speed stated in the columns represent maximum values and are interrelated. Under extreme working conditions it is recommended not to use all maximum values simultaneously.

For special requirements (pressure, temperature, speed, etc.) please contact our consultancy service, so that suitable materials and/or designs can be recommended.

Compatibility of seals and operating media / cleaning agents

Due to the great diversity of operational parameters affecting fluidic devices and their impact on seals, it is absolutely imperative that manufacturers of these devices approve seals for functional and operational suitability under field conditions.

Furthermore, in view of the consistent increase of newly available media used as hydraulic oils, lubricants, and cleaning agents, special attention is invited to the aspect of compatibility with sealing elastomers currently in use.

Additives contained in base media in order to enhance certain functional characteristics may affect compatibility characteristics of sealing materials.

For this reason, it is imperative that any product equipped with our seals be tested for compatibility with operational media or cleaning agents approved or specified by you either at your plant or by means of field tests prior to any field use.

We kindly ask you to comply with this notice since, as a manufacturer of seals, we are not in a position, as a matter of principle, to perform simulations of any and all conditions present in the final application nor of knowing the composition of the operational media and cleaning agents used.

Tel: +45 63 12 83 00 | Email: ps@hymatik.com | www.hymatik.com | Hvidkaervej 27a, DK-5250 Odense SV, Denmark

Design modifications

We reserve the right to make design modifications without prior notification.

Validity

This edition supersedes all prior documents.

Prototypes and samples

Prototypes and samples are produced from experimental moulds. The subsequent series production may differ in terms of production techniques from the prototype production unless specific agreement to the contrary was reached beforehand.

Delivery and services

The delivery guarantee (availability of moulds) for individual dimensions of our range of products is limited to a period of 7 years.

Damaged moulds, including standard items, can only be replaced in case of sufficient demand. Most of the dimensions stated in this catalogue are normally (but not as a matter of course) available ex stock.

For the production of smaller quantities, special compounds, and in case of special production procedures, we reserve the right of charging a prorated share of set-up costs.

All deliveries and services are subject to our terms.

Quality systems

Our manufacturing sites are certified according to ISO 9001 and/or ISO/TS 16949 and/or EN9100.

Copyright

All rights reserved by Parker Hannifin Corporation. Extracts may only be taken with permission. Modification rights reserved.

Tel: +45 63 12 83 00 | Email: ps@hymatik.com | www.hymatik.com | Hvidkaervej 27a, DK-5250 Odense SV, Denmark

Sealing technology by Parker Praedifa

The Engineered Materials Group of the Parker Hannifin Corporation is a worldwide leader in the development, production and sale of sealing systems, vibration dampers, EMI shielding systems and thermally conductive materials.

Quality assurance

In the Prädifa Technology Division's world-class facilities, skilled Parker technicians manufacture O-rings to exacting standards. From in-house mixing and tooling operations to the final non-contact inspection process, state-of-the art technology is employed to provide unparalleled material consistency and dimensional control. Quality registrations are maintained to ensure superior product performance and process repeatability.

Research and development

Based on decades of experience in a wide range of markets Parker develops tailored sealing solutions for virtually any application. Parker's sealing experts can draw on an extensive network of R+D laboratories around the globe. State-of-the-art materials, high-end manufacturing technology and designs that are perfectly tailored to the specific application result in products and solutions that have one aim in mind: the full satisfaction of our customers and partners.

Computer simulation

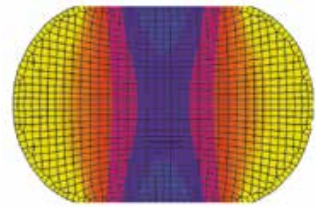

Parker Prädifa uses the Finite Elements Method to develop and optimise sealing systems. Particularly elastomer materials with their non-linear properties cannot be described strictly by using standard software. Therefore, Parker Prädifa has developed proprietary mathematical models to describe the complex material properties and special measuring methods to capture the relevant material parameters.
Computer simulation allows experts to detect weak areas as early as in the concept phase and to optimise materials or geometries. This saves development time and costs.

Literature



The Parker O-Ring Handbook has been a standard reference work used by seal designers for decades. It contains comprehensive information about the properties of the most important sealing elastomers, typical O-ring application examples, examples of statically acting seal designs plus descriptions of conditions that may lead to O-Ring failure. In addition, the handbook contains an overview of international dimensions and standards as well as media compatibility data for fluids, gases and solids.

Tel: +45 63 12 83 00 | Email: ps@hymatik.com | www.hymatik.com | Hvidkaervej 27a, DK-5250 Odense SV, Denmark

Compounds



Tailored materials require tailored compounding processes. Therefore, Parker produces its rubber mixtures and polymerises its thermoplastic materials in-house. The portfolio of materials developed and produced by Parker ranges from compounds for extremely low temperatures down to 60 °C (silicones) to very high temperatures up to +320 °C (Parofluor®). Parker offers the appropriate compound for the specific application requirements including excellent resistance against aggressive chemicals. With excellent extrusion and abrasion resistance Parker's proprietary polyurethane line is suitable for an extremely extensive application range and continually new uses.

Product lines



Parker manufactures O-rings and special moulded parts for automotive engineering, the chemical and bio-chemical industries, fluid power, refrigeration and air conditioning technology, the petroleum sector, aerospace, the semi-conductor industry and many other industrial sectors.

O-rings

O-rings are manufactured according to metric and imperial international standards such as AS-568B, DIN ISO 3601 and JIS. Custom sizes of almost any dimension are possible such as miniature O-rings and special O-rings with large dimensions.

O-ring-kits



The handy carrying case with O-rings is ideally suited for repairs, assembly jobs and workshops, and finally puts an end to the search for the right O-ring.
Parker offers it in various versions: with O-rings in selected imperial and metric standard dimensions and appropriate materials or with customised content. Compact, well arranged and always within reach, the kit provides the appropriate materials for quick use.

Accessories



Products to assist O-ring users include assembly greases and lubricants, sizing cones and extraction tools.

Tel: +45 63 12 83 00 | Email: ps@hymatik.com | www.hymatik.com | Hvidkaervej 27a, DK-5250 Odense SV, Denmark

Parbak® Back-up rings

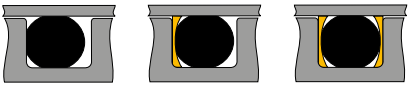

Parbak® Back-up rings prevent extrusion in high-pressure applications, help to maintain the lubricant film and thus prolong the service life of O-rings.
The Parbak® numbers correspond to the size designations of the 2-xxx series of the Parker O-rings they are installed with (e.g. 8-211, N 300-90 fits O-ring 2-211, N 674-70).

ParCoat® Coating

O-rings with ParCoat® coatings can be assembled with low exertion of force using automatic equipment. The rings will not stick together during the feeder process. Prior to installation they can be elongated by over 150 % without causing the anti-friction coating to burst or crack.

Benefits

- Clearly reduced frictional forces
- No damage to seals during installation or assembly
- Faster, more cost-efficient assembly process
- Improves interfacial seal tightness, especially for sealing against gases
- Seals will not stick together in automatic feeding processes
- No soiling or contamination
- Translucent ParCoat® treated O-rings insures no risk of mix-ups as basic elastomer compound colour remains visible
- Elongation capacity above 150 %, depending on type
- Suitable for nearly all standard elastomer types (for LSR not all coatings applicable)
- In different colours available

Tel: +45 63 12 83 00 | Email: ps@hymatik.com | www.hymatik.com | Hvidkaervej 27a, DK-5250 Odense SV, Denmark

Parker O-ring compounds are formulated to meet the most stringent industry standards, including FDA, USP, KTW, DVGW, BAM, WRAS (WRC), NSF, Underwriters Laboratories (UL), Aerospace (AMS) and many customer-specific requirements.

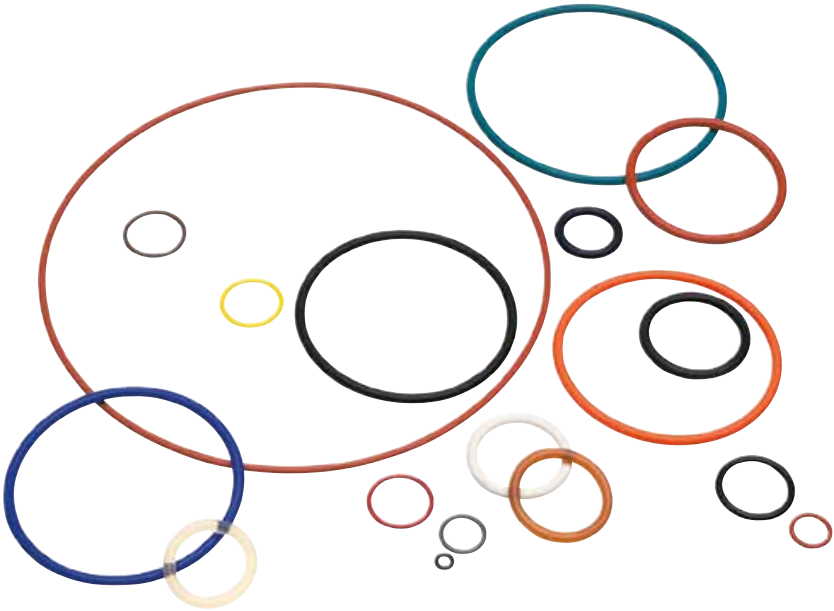

Tel: +45 63 12 83 00 | Email: ps@hymatik.com | www.hymatik.com | Hvidkaervej 27a, DK-5250 Odense SV, Denmark

Compounds

O-rings can be molded in a wide range of compounds in hardnesses from 40 to 90 Shore A. These materials include:

Polyacrylate (ACM)

ACM (acrylic rubber) has good resistance to mineral oil, oxygen and ozone. The water compatibility and cold flexibility of ACM are considerably worse than those with NBR.

Polychloroprene rubber (CR)

Also known by the tradename Neoprene, polychloroprene was the first synthetic rubber and exhibits generally good ozone, aging, and chemical resistance. It has good mechanical properties over a wide temperature range.

Nitrile butadiene rubber (NBR)

Nitrile rubber (NBR) is the general term for acrylonitrile-butadiene terpolymer. The acrylonitrile content of nitrile sealing compounds varies considerably (18 to 50 %). Polymers with higher ACN content exhibit less swell in gasoline and aromatic solvents, while lower ACN polymers exhibit better compression set and low temperature flexibility. Polymer is also called Buna-N.

Hydrogenated nitrile butadiene rubber (HNBR)

Hydrogenated NBR was developed as an air-resistant variant of nitrile rubber. In HNBR, the carbon-carbon double bonds in the main polymer chain are saturated with hydrogen atoms in a process called “hydrogenation” that improves the material s thermal stability and oxidation resistance.

Ethylene propylene rubber (EPDM)

EPDM is a terpolymer of ethylene, propylene, and a diene third monomer used for cross-linking.

Silicone rubber (VMQ)

Silicone elastomers have relatively low tensile strength, poor tear and wear resistance. Silicones also possess good insulating properties and tend to be physiologically neutral.

Fluorosilicone (FVMQ)

Fluorosilicone is a silicone polymer chain with fluorinated side-chains for improved oil and fuel resistance. The mechanical and physical properties are very similar to those of silicone.

Liquid silicone rubber (LSR)

Liquid Silicone Rubber (LSR) offer great advantage producing efficient high quantity silicone parts. Flash less production gives opportunities for difficult molded shapes. I.E. for fastidious medical or automotive applications.

Fluorocarbon (FKM)

Fluorocarbon (FKM) has excellent resistance to high temperatures and a broad range of chemicals. Permeability and compression set are excellent.

HiFluor® (FKM, FB)

As a high-performance fluoroelastomer, HiFluor® offers chemical stability comparable to perfluoro elastomers (FFKM) in nearly all media.
Particularly in polar solvents, HiFluor® exhibits major advantages over conventional FKM polymers.
HiFluor® offers a wide range of application solutions in all industrial sectors. From conventional O-rings in standard (imperial and metric) dimensions through to diaphragms and moulded engineering parts according to customers drawings, the compound can be processed in rubber-metal composites as well.

Tel: +45 63 12 83 00 | Email: ps@hymatik.com | www.hymatik.com | Hvidkaervej 27a, DK-5250 Odense SV, Denmark

Parofluor® (FFKM)

The Parofluor® range consists of advanced perfluorinated elastomers (FFKMs) exclusively developed and produced by Parker Hannifin. They are carried under the trade names of Parofluor® and Parofluor Quantum®. Compared with other perfluorinated elastomers Parofluor® compounds offer outstanding retained resiliency as they have been developed specifically for extremely challenging sealing applications.

Parker O-ring compound numbering system

Parker O-ring compounds are described by the following system.

N0674-70:
N= Polymercode
0674= Sequence number (compound code)
-70= Hardness (Shore A)

Polymer-code:
A= Polyacrylate
C= Neoprene (Chloroprene)
E= Ethylene propylene
L= Fluorosilicone
N= Nitrile (Buna N) and HNBR
S= Silicone
V= Fluorocarbon, HiFluor®, Parofluor®
P= Thermoplastic elastomers

Tel: +45 63 12 83 00 | Email: ps@hymatik.com | www.hymatik.com | Hvidkaervej 27a, DK-5250 Odense SV, Denmark

Sealing compounds

Compound code	Polymer base	Hard-ness [Shore A]	Colour	Temperature range static [°C]		Properties / Applications
Polyacrylate rubber (ACM)						
A8845-70	ACM	$70^{\pm5}$	black	-20	150	
Polychloroprene Rubber (CR)						
C0557-70	CR	$70^{\pm5}$	black	-40	100	• often used in refrigerant (e.g. R134a or R22) • good aging and salt water resistance
C0944-70	CR	$70^{\pm5}$	red	-40	100	
Ethylene propylene rubber (EPDM)						
E0529-60	EPDM	$60^{\pm5}$	black	-50	150	
E0540-80[1)]	EPDM	$80^{\pm5}$	black	-50	150	• standard compound • good compression set • hot water • air to 150 °C • steam to 200 °C • dilute acids • fire-resistant hydraulic fluids with phosphate ester base • brake fluids with non-mineral oil base
E3609-70	EPDM	$70^{\pm5}$	black	-50	150	• standard compound • FDA-compliant • (EC) No. 1935/2004 • USP Class VI • not suitable for use with milk and nutritional oil
E3678-80	EPDM	$80^{\pm5}$	violet	-50	150	
E3804-90	EPDM	$90^{\pm5}$	black	-50	150	• Parbak® compound
E8556-70	EPDM	$70^{\pm5}$	black	-50	150	• for industrial cooling water applications • improved ageing resistance
E8743-70	EPDM	$70^{\pm5}$	black	-50	150	• FDA-compliant • (EC) No. 1935/2004 • for food industry • ADI-free
E8780-80	EPDM	$80^{\pm5}$	black	-50	150	• standard for drinking water applications • approvals: KTW, W 270, EN 681-1, W 534, ÖNORM B-5014-1, BfR • FDA-compliant (not suitable for use with milk and nutritional oil) • (EC) No. 1935/2004
E8790-70	EPDM	$70^{\pm5}$	black	-50	150	• standard for drinking water applications • approvals: KTW, WRAS, W 270, EN 681-1, W 534, KIWA, NSF 61, ÖNORM B-5014-1 • FDA-compliant (not suitable for use with milk and nutritional oil) • (EC) No. 1935/2004

Tel: +45 63 12 83 00 | Email: ps@hymatik.com | www.hymatik.com | Hvidkaervej 27a, DK-5250 Odense SV, Denmark

Compound code	Polymer base	Hard-ness [Shore A]	Colour	Temperature range static [°C]		Properties / Applications
Nitrile butadiene (NBR)						
N0525-60	NBR	$60^{\pm5}$	black	-35	100	
N0552-90[1]	NBR	$90^{\pm5}$	black	-30	100	
N0674-70[1]	NBR	$70^{\pm5}$	black	-35	100	• standard compound • resistance to mineral oil and mineral oil products, animal and vegetable oils • generally suited for hydraulic and pneumatic systems compatible with hydraulic oil, water glycol (HFC fluids) and oil in water emulsions (HFA fluids)
N3505-50	NBR	$50^{\pm5}$	black	-35	100	• improved ozone and weather-proof resistance
N3575-75	NBR	$75^{\pm5}$	black	-50	100	• low temperature with improved oil resistance
N3578-80	NBR	$80^{\pm5}$	black	-40	100	
Hydrogenated nitrile butadiene rubber (HNBR)						
N3510-85	HNBR	$85^{\pm5}$	black	-35	150	
N3512-90	HNBR	$90^{\pm5}$	black	-35	150	
N3554-75	HNBR	$75^{\pm5}$	light green	-35	150	
N3573-75	HNBR	$75^{\pm5}$	black	-35	150	
N3723-80	HNBR	$80^{\pm5}$	black	-35	150	
N3813-70	HNBR	$70^{\pm5}$	black	-40	150	• for low temperatures
N3831-70	HNBR	$70^{\pm5}$	black	-35	150	• suitable for AdBlue®[2] to approx. 80 °C
N3837-85	HNBR	$85^{\pm5}$	green	-35	150	
N8505-70	HNBR	$70^{\pm5}$	green	-35	150	• suitable for biodiesel (RME) applications up to 80 °C
N8680-90	HNBR	$90^{\pm5}$	black	-40	150	• for low temperatures
N8888-70	HNBR	$70^{\pm5}$	yellow	-35	150	• for gas and water application • approval for EN 549, EN 681-1

Tel: +45 63 12 83 00 | Email: ps@hymatik.com | www.hymatik.com | Hvidkaervej 27a, DK-5250 Odense SV, Denmark

Sealing compounds

Compound code	Polymer base	Hard-ness [Shore A]	Colour	Temperature range static [°C]		Properties / Applications
Thermoplastic elastomers (TPE) (Ultrathan®)						
P4300	TPU	92±5	yellow	-30	110	• excellent high-temperature behaviour • excellent dynamic behaviour
P5000	TPU	94±5	dark green	-20	100	• very good hydrolysis resistance • FDA-compliant
P5001	TPU	94±5	brown	-35	100	• good hydrolysis resistance
P5007	TPU	82±5	green, trans-lucent	-35	80	• standard compound
P5008	TPU	94±5	green	-35	100	• standard compound
P5009	TPU	94±5	grey	-45	95	• for low temperatures
P5012	TPU	90±5	red	-38	100	• good hydrolysis resistance
P5029	TPU	94±5	nature	-20	100	• very good hydrolysis resistance • FDA-compliant
P5070	TPU	83±5	green	-35	85	• good hydrolysis resistance
P5075	TPU	80±5	ochre	-45	80	• for low temperatures
P6000	TPU	95±5	grey	-35	110	• very high mechanical strength • extrusion resistance
P6030	TPU	93±5	orange	-35	105	• high mechanical strength • extrusion resistance
Silicone rubber (VMQ)						
S0595-50	VMQ	50±5	red	-55	200	
S0604-70	VMQ	70±5	red	-55	200	• standard compound • hot air to 210 °C • water to 100 °C • only suitable as static seal
S0613-60	VMQ	60±5	red	-55	200	
S0614-80	VMQ	80±5	red	-55	200	
Liquid silicone rubber (LSR)						
S3693-50	LSR	50±5	reddish brown	-50	200	
S3695-60	LSR	60±5	reddish brown	-50	200	
S3697-40	LSR	40±5	reddish brown	-50	200	
S3698-70	LSR	70±5	reddish brown	-50	200	

Tel: +45 63 12 83 00 | Email: ps@hymatik.com | www.hymatik.com | Hvidkaervej 27a, DK-5250 Odense SV, Denmark

Compound code	Polymer base	Hardness [Shore A]	Colour	Temperature range static [°C]		Properties / Applications
Fluorosilicone (FVMQ)						
L0677-70	FVMQ	70±5	blue	-60	170	• for high temperatures • good low-temperature resistance • mostly fitted where fuel and oil resistance is important • predominant in aircraft
L0806-80	FVMQ	80±5	blue	-60	170	• approvals for military and aerospace applications
L3355-70	FVMQ	70±5	yellow	-60	170	• used in automotive fuel couplings
L8559-70	FVMQ	70±5	blue	-60	170	
L8585-80	FVMQ	80±5	blue	-60	170	• approvals for aerospace applications
Fluorocarbon (FKM)						
V0709-90	FKM	90±5	black	-25	200	
V0747-75[1)]	FKM	75±5	black	-25	200	• standard compound • for high temperatures • hot oil • aromatic solvents • wide chemical resistance • fire-resistant fluids with phosphate ester and chlorinated hydrocarbon base • copolymer
V0763-60	FKM	60±5	brown	-25	200	• copolymer
V0884-75	FKM	75±5	brown	-25	200	• copolymer
V0894-90	FKM	90±5	brown	-25	200	• copolymer
V3642-75	FKM	75±5	black	-25	200	• terpolymer
V3670-70	FKM	70±5	green	-25	200	• copolymer
V3681-80	FKM	80±5	green	-25	200	• copolymer
V3736-75	FKM	75±5	black	-28	200	• terpolymer • improved low temperature resistance
V3738-75	FKM	75±5	black	-20	200	• improved medium compatibility
V8592-75	FKM	75±5	blue	-40	200	• for low temperatures
V8703-75	FKM	75±5	black	-30	200	• improved low temperature resistance • suitable for biodiesel (RME) applications
V8722-75	FKM	75±5	black	-25	200	• FDA-compliant • (EC) No. 1935/2004 • ADI-free • improved resistance against water glycol and acids
V8750-70	FKM	70±5	black	-25	200	• FDA-compliant • (EC) No. 1935/2004 • food industry
V8802-80	FKM	80±5	blue	-40	200	• for low temperatures

Tel: +45 63 12 83 00 | Email: ps@hymatik.com | www.hymatik.com | Hvidkaervej 27a, DK-5250 Odense SV, Denmark

Sealing compounds

Compound code	Polymer base	Hard-ness [Shore A]	Colour	Temperature range static [°C]		Properties / Applications
V8877-75	FKM	75±5	blue	-50	200	• highly improved low temperature resistance
V8989-80	FKM	83±5	black	-40	200	• for low temperatures • improved medium compatibility and mechanical properties
High Performance Fluoroelastomer (HiFluor®) (FKM)						
V3819-75	FKM	75±5	black	-25	+250	• improved resistance against water glycol and acids • excellent availability in Parker standard dimensions
V8534-90	FKM	90±5	black	-25	+250	• improved resistance to explosive decompression and gap extrusion • off-shore and petrochemical applications
V8730-70	FKM	70±5	white	-25	+250	• food industry • FDA-compliant • (EC) No. 1935/2004 • particularly suitable for use with high processing temperatures and aggressive media
V3852-65	FKM	65±5	black	-25	+250	• preferably used for moulded functional components and membranes / diaphragms
V8558-75	FKM	75±5	green	-25	+260	• coloured version
High Performance Fluoroelastomer (HiFluor® FB)						
V8879-75	FEPM	75±5	black	-15	+230	• very good chemical resistance • very good varnish stability • FDA-compliant • (EC) No. 1935/2004
V8991-75	FEPM	75±5	black	-25	+200	• very good chemical resistance • good steam resistance (CIP/SIP) • FDA-compliant • (EC) No. 1935/2004 • USP Class VI • (EC) No. 2023/2006 • ADI-free • 3-A Sanitary Standards Cl. I + II • BNIC

Tel: +45 63 12 83 00 | Email: ps@hymatik.com | www.hymatik.com | Hvidkaervej 27a, DK-5250 Odense SV, Denmark

Compound code	Polymer base	Hard-ness [Shore A]	Colour	Temperature range static [°C]		Applications / Properties
Perfluoro elastomer (Parofluor®)						
V3734-70	FFKM	$70^{\pm5}$	black	-25	240	• for low temperatures • for aerospace
V8545-75	FFKM	$75^{\pm5}$	black	-15	300	• best compound for hot water and steam applica-tions • AMS 7257
V8562-75	FFKM	$75^{\pm5}$	white	-15	300	• for high temperature-plasma-applications • dry applications in semiconductor industries
V8588-90	FFKM	$90^{\pm5}$	black	-15	260	• ED resistant • Norsok M-710
V8920-75	FFKM	$75^{\pm5}$	black	-15	260	• good resistance in hot water • for wet processes in semiconductor applications
V8921-75	FFKM	$75^{\pm5}$	white	-15	260	• pure compound for sterile and pharmaceutical technology • for oxidising media
V8930-75	FFKM	$75^{\pm5}$	black	-15	325	• for high temperatures • not recommended for hot aliphatic amine and water steam
V8950-75	FFKM	$75^{\pm5}$	black	-15	240	• FDA-compliant • (EC) No. 1935/2004 • ADI-free • for food industry, pharmacy and biotechnology
V8951-70	FFKM	$70^{\pm5}$	white	-15	240	• FDA-compliant • (EC) No. 1935/2004 • ADI-free • USP Class VI • for pharmacy, biotechnology and medical technol-ogy
FF400-80	FFKM	$80^{\pm5}$	black	-44	230	• for low temperatures • oil and gas • chemical industries • ED resistant
Perfluoro elastomer (Parofluor Quantum®)						
V8787-75	FFKM	$75^{\pm5}$	black	-20	+230	• optimized paint, varnish and solvent stability
V8844-75	FFKM	$75^{\pm5}$	nature	-20	+230	• optimized paint, varnish and solvent stability
V8910-75	FFKM	80^{+8}_{-5}	black	-20	+220	• improved chemical resistance
V8911-75	FFKM	75^{+8}_{-5}	white	-20	+220	• improved chemical resistance

[1] Bold printed compounds are 2-xxx standard and are available ex-stock.

Tel: +45 63 12 83 00 | Email: ps@hymatik.com | www.hymatik.com | Hvidkaervej 27a, DK-5250 Odense SV, Denmark

Range of application

Underwriters laboratories approved services

Compound code	Fire extinguishing agents A	Petrol B	Gasoline / alcohol blends C	Naptha or kerosene D	MPS gas E	MFG or natural gas F	Diesel fuel, fuel oil, lubricating oil G	Heated fuel oil H	Anhydrous ammonia I	LP-gas J
N0674-70	•			•		•	•	•	•	•
V0747-75		•		•		•	•	•		•
V0884-75		•	•	•			•			

Compounds for gas supply and consumer appliances

The following Parker Hannifin compounds are approved by the German Association for Gas and Water (DVGW) for the applications listed:

Parker compound	Polymer	Colour	Standard
V0747-75	FKM	black	• DIN EN 549
N0552-90	NBR	black	• DIN EN 549
N0674-70	NBR	black	• DIN EN 549 • VP 406
N3506-70	NBR	black	• DIN EN 549
N3578-80	NBR	black	• DIN EN 549
N3829-70	NBR	black	-
N8902-85	NBR	yellow	• DIN EN 549 • VP 614 • VP 406
N8888-70	HNBR	red	• DIN EN 549
S3698-70	LSR	black	• DIN EN 549
V0884-75	FKM	brown	• DIN EN 549

Tel: +45 63 12 83 00 | Email: ps@hymatik.com | www.hymatik.com | Hvidkaervej 27a, DK-5250 Odense SV, Denmark

Compounds for the food and pharmaceutical industry

Seals coming into contact with products in food, beverage and pharmaceutical production must be resistant to “CIP” (Cleaning in Place) and “SIP” (Sterilisation in Place) processes. The silicone materials are suitable for use in food applications with respect to their physiological properties because they are inert as well as odourless and tasteless. In addition to chemical and thermal resistance, the sealing compounds have to meet various national, European and international regulations. In Germany, The **Federal Institute for Risk Assessment (BfR)** issues recommendations for ingredients, additives, residues, contaminations and permissible migration levels (migration or leaching) in foodstuffs and animal feed.
3-A Sanitary Standards Inc. (3-A SSI) is an independent organisation dedicated to advancing hygienic equipment design for the U.S. food, beverage and pharmaceutical industries.

Important regulations:

- Annex I, Article 3 of **European Regulation (EC) No. 1935/2004**
- Regulation (EC) No. 1907/2006 on the **Registration, Evaluation, Authorisation and Restriction of Chemicals (REACH)**
- The **USP (United States Pharmacopiea) Class VI** protocol certifies the biological compatibility with living organisms and thus the harmlessness of sealing materials to health. The most important test protocols are USP Class VI, Part 88 and USP Class VI, part 87 acc. to ISO 10993-1.

Parker has developed formulations which are **ADI-free (free from Animal Derived Ingredients)** because such ingredients may cause BSE (bovine spongiform encephalopathy).

Parker compound	Polymer	Colour	Standard
E3609-70	EPDM	black	• FDA [1)] • (EC) No. 1935/2004 • USP Class VI
E8743-70	EPDM	black	• FDA • (EC) No. 1935/2004 • BfR • ADI-free
E8780-80	EPDM	black	• FDA[1)] • (EC) No. 1935/2004 • BfR
E8790-70	EPDM	black	• FDA[1)] • (EC) No. 1935/2004 • BfR
P5000	TPU	green	• FDA
P5029	TPU	neutral	• FDA
S3693-50	LSR	reddish brown	• FDA • (EC) No. 1935/2004 • BfR
S3695-60	LSR	reddish brown	• FDA • (EC) No. 1935/2004 • BfR
S3697-40	LSR	reddish brown	• FDA • (EC) No. 1935/2004 • BfR
S3698-70	LSR	reddish brown	• FDA • (EC) No. 1935/2004 • BfR

Tel: +45 63 12 83 00 | Email: ps@hymatik.com | www.hymatik.com | Hvidkaervej 27a, DK-5250 Odense SV, Denmark

Sealing compounds

Parker compound	Polymer	Colour	Standard
V0747-75	FKM	black	• ADI-free
V8722-75	FKM	black	• FDA • (EC) No. 1935/2004
V8750-70	FKM	black	• FDA • (EC) No. 1935/2004
HiFluor® V8522-75	FKM	white	• ADI-free
HiFluor® V8730-70	FKM	white	• FDA • (EC) No. 1935/2004
Parofluor® V8742-70	FFKM	white	• ADI-free
Parofluor® V8950-75	FFKM	black	• FDA • (EC) No. 1935/2004 • ADI-free
Parofluor® V8951-70	FFKM	white	• FDA • (EC) No. 1935/2004 • ADI-free • USP Class VI

KTW approved compounds

Sealing compounds for use in drinking water and heating applications are subject to a large number of approval regulations designed to ensure their harmlessness from the stage of water extraction, treatment and transport through to the consumer's tap. Worldwide, almost all countries have issued their own drinking water regulations including specific tests and lists of approved ingredients. The regulations are complemented by physical and microbiological examinations.

KTW:
KTW is the nationally recognized standard for all devices, components and materials which contact drinking water. In addition to Germany **(KTW)**, Great Britain **(WRAS)**, the USA **(NSF61)**, France **(ACS)** and the Netherlands **(KIWA)** have published their own regulations for these applications. Parker's Prädifa Technology Division has developed several materials that are certified to KTW.

Parker compound	Polymer	Water contact temperature (°C)	Colour	Standard
E1549-70	EPDM	85	black	• WRAS
E1549-70	EPDM	82	black	• NSF 61
E8780-80	EPDM	90	black	• W270 • KTW
E8780-80	EPDM	-	black	• EN 681-1 • W 534
E8790-70	EPDM	90	black	• KTW • W270
E8790-70	EPDM	85	black	• WRAS
E8790-70	EPDM	90	black	• KIWA
E8790-70	EPDM	-	black	• EN 681-1 • W 534
N8888-70	HNBR	-	yellow	• EN 681-1 • EN 549

[1] Not suitable for use with milk and nutritional oil

Tel: +45 63 12 83 00 | Email: ps@hymatik.com | www.hymatik.com | Hvidkaervej 27a, DK-5250 Odense SV, Denmark

Aerospace materials

The aerospace industry demands the most from elastomeric compounds. Special materials often must be developed to meet specification requirements. finished parts, not least to meet safety, technical and quality requirements.

AMS[1] and NAS[2] rubber specification descriptions

Specification	Parker compound	Hardness	Remarks
AMS3201	N0545-40	35 - 45	• dry heat resistance
AMS3205	N0299-50	45 - 55	• low temperature resistance
AMS3208	C0267-50	45 - 55	• weather resistant • chloroprene
AMS3209	C1124-70	65 - 75	• weather resistant • chloroprene
AMS3212	N0525-60	55 - 65	• aromatic fuel resistant
AMS3220	N0525-60	55 - 65	• general purpose • fluid resistant
AMS3238	B0318-70	65 - 75	• phosphate-ester resistant • butyl
AMS3301	S0469-40	35 - 45	• silicone • general purpose
AMS3302	S0595-50	45 - 55	• silicone • general purpose
AMS3303	S0613-60	55 - 65	• silicone • general purpose
AMS3304	S1224-70 S0604-70	65 - 75	• silicone • general purpose
AMS3305	S0614-80	75 - 85	• silicone • general purpose
AMS3325	L1223-60 LM152-60	55 - 65	• fluorosilicone • oil resistant • fuel resistant
AMS3337	S0383-70	65 - 75	• silicone • extrem low temperature resistance
AMS3345	S0899-50	45 - 55	• silicone
AMS3357	S1224-70 S0604-70	65 - 75	• silicone • extrem low temperature resistance
AMS7257	V8545-75 FF200-75	70 - 80	• sealing rings • perfluorinated rubber • for high temperatures
AMS7259	V0709-90	85 - 95	• for high temperatures • fluid resistant • very low compression set • FKM

Tel: +45 63 12 83 00 | Email: ps@hymatik.com | www.hymatik.com | Hvidkaervej 27a, DK-5250 Odense SV, Denmark

Sealing compounds

Specification	Parker compound	Hardness	Remarks
AMS7267	S0355-75	70 - 80	• silicone • dry heat resistance • very low compression set
AMS7271	N0506-65	60 - 70	• fuel resistant • low temperature resistance
AMS7272	N0287-70	65 - 75	• synthetic lubricant resistant
AMS7276	V1164-75 V1226-75 V0747-75	70 - 80	• high temperature fluid resistant • very low compression set • FKM
NAS1613	E1267-80	75 - 85	• packing • O-ring • phosphate-ester resistant
AMS-P-5315	N0602-70	65 - 75	• packing • O-ring • hydrocarbon fuel resistant
AMS-P-5510	N0507-90	85 - 95	• sealing • straight thread tube fitting boss
AMS-R-6855	N0406-60 C1124-70	55 - 75	• synthetic rubber sheets • stripes • moulded or extruded shapes • synthetic oil resistant
AMS-P-25732	N0304-75	70 - 80	• packing • petroleum hydraulic fluid resistant • limited performance
AMS-R-25988	L1120-70 L1223-60 L1218-80 L1077-75 LM152-60 LM153-70 LM154-75 LM155-80	55 - 85	• fluorosilicone rubber • oil resistant • fuel resistant
AMS-R-83248	V1164-75 V1226-75 V0747-75 V0709-90	70 - 95	• rubber • fluorocarbon rubber • high temperature fluid resistant • low compression set
AMS-P-83461	N0756-75	70 - 80	• packing • moulded shape • petroleum hydraulic fluid resistant • improved performance
AMS-R-83485	V0835-75	70 - 80	• rubber • fluorocarbon rubber • improved Performance at low temperatures

[1] Aerospace Material Specification issued by the Society of Automotive Engineers, Inc.
[2] National Aerospace Standard issued by Aerospace Industries Association of America, Inc.

Tel: +45 63 12 83 00 | Email: ps@hymatik.com | www.hymatik.com | Hvidkaervej 27a, DK-5250 Odense SV, Denmark

Specifications

Airbus Nord-Sud Aviation (NSA)

Specification	Parker compound	Category
NSA 5512	special compound	bonded seal
NSA 8200	L8585-80	3-xxx sizes
NSA 8201	E1267-80	3-xxx sizes
NSA 8202	C3645-80	3-xxx sizes
NSA 8203	L8585-80	2-xxx sizes
NSA 8204	E1267-80	2-xxx sizes, NAS 1613, colour code
NSA 8205	C3645-80	2-xxx sizes
NSA 8206	S0604-70	2-xxx sizes
NSA 8207	S0604-70	3-xxx sizes
NSA 8213	E1267-80	square ring
NSA 8216	E1267-80	square ring
NSA 8218	E1267-80	square ring
NSA 8671	W5036	square ring, PTFE

Specifications Norme Française (NF), (french standard)

Specification	Parker compound	Category
NF L17-241	E1267-80	41B8
NF L17-160	V0709-90	60C9
NF L17-164	V0747-75	64C8
NF L17-261	L8585-80	61D8
NF L17-261	L1218-80	61D8
NF L17-250-4	S0604-70	EN 2261

Tel: +45 63 12 83 00 | Email: ps@hymatik.com | www.hymatik.com | Hvidkaervej 27a, DK-5250 Odense SV, Denmark

Compound Data Sheet (WL)

Specification	Parker compound
5.5440	C0365-45
5.5502	S0595-50
5.5600	E0529-65
5.5601	N0406-60
5.5602	N0239-60
5.5603	S0613-60
5.5612	N0406-60
5.5627	N0261-65
5.5629	N0525-60
5.5655	N0406-60
5.5688	L3747-60
5.5701	V0747-75
5.5702	N0674-70
5.5703	S0604-70
5.5704	V3670-70
5.5707	B3688-70
5.5709	C0557-70
5.5710	L0677-70 / L8559-70
5.5801	N3578-80
5.5802	E0540-80
5.5804	V0747-75
5.5808	V0709-90
5.5810	N0552-90
5.5813	L0806-80
5.5814	S0614-80
5.5829	N0755-80
5.5855	N3518-80

The following charts are included to facilitate engineering analysis. Additional information is available in the Parker O-Ring Handbook.

Deformation force

The force necessary to deform an O-ring cross-section by a given amount (in per cent) depends on the compound modulus. As it is relative to seal geometry, it is given for different O-ring cross-sections. As a user will typically only know the dimensions and hardness, the following diagrams show the relationship between hardness, compression and cross-section. The information refers to all elastomers, which is why the deformation forces are given for each hardness class. The forces required to deform elastomers during assembly of flanges, for example, can be obtained from the diagrams, and forces which affect seals on less resilient plastic parts can also be estimated.

Tel: +45 63 12 83 00 | Email: ps@hymatik.com | www.hymatik.com | Hvidkaervej 27a, DK-5250 Odense SV, Denmark

Deformation force

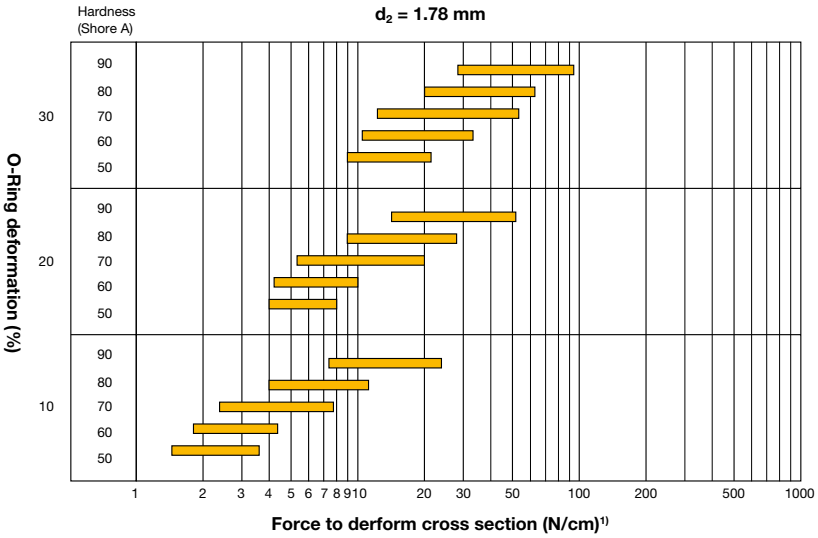

[1)] Length in cm of O-ring circumference

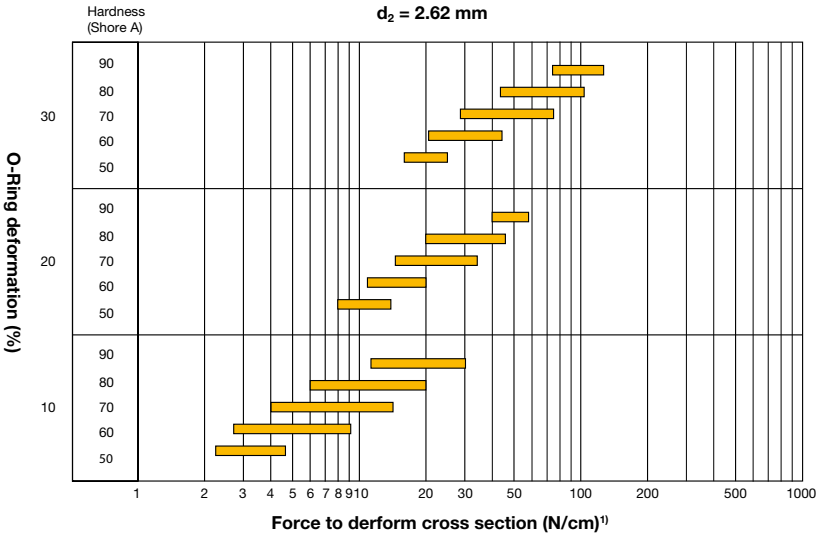

[1)] Length in cm of O-ring circumference

Tel: +45 63 12 83 00 | Email: ps@hymatik.com | www.hymatik.com | Hvidkaervej 27a, DK-5250 Odense SV, Denmark

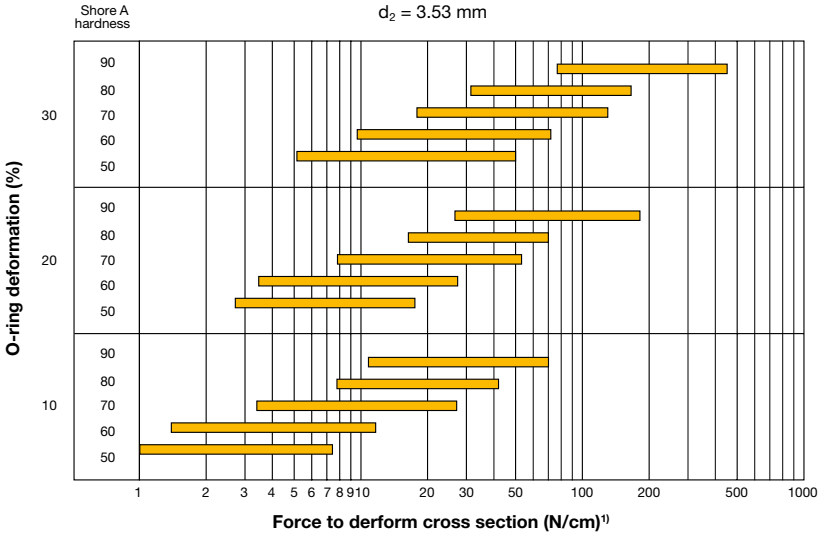

1) Length in cm of O-ring circumference

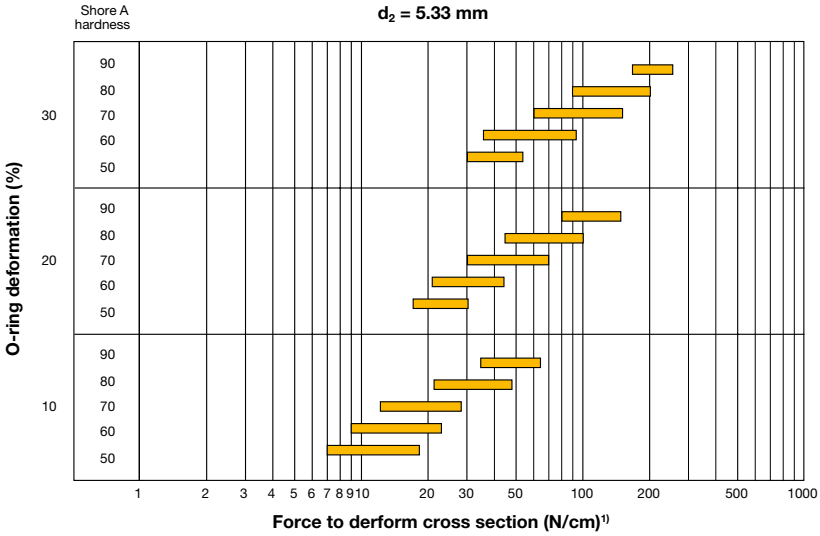

1) Length in cm of O-ring circumference

Deformation force

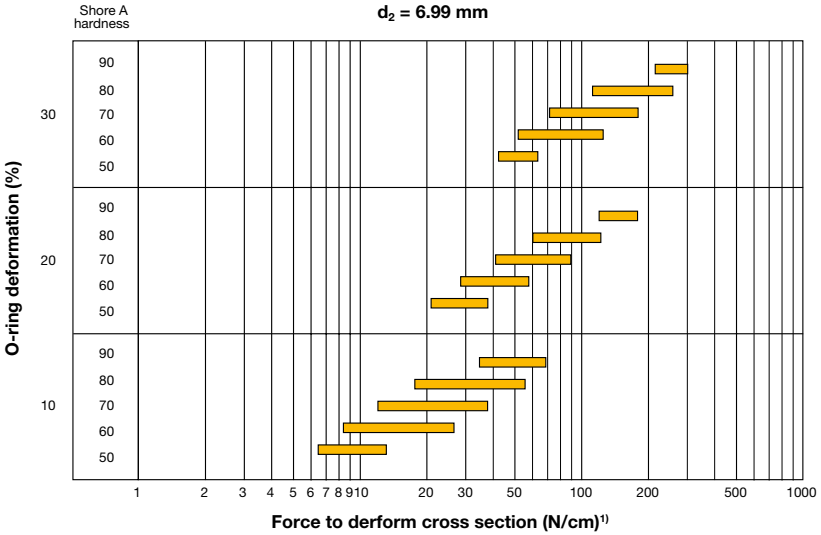

[1)] Length in cm of O-ring circumference

Tel: +45 63 12 83 00 | Email: ps@hymatik.com | www.hymatik.com | Hvidkaervej 27a, DK-5250 Odense SV, Denmark

Extrusion

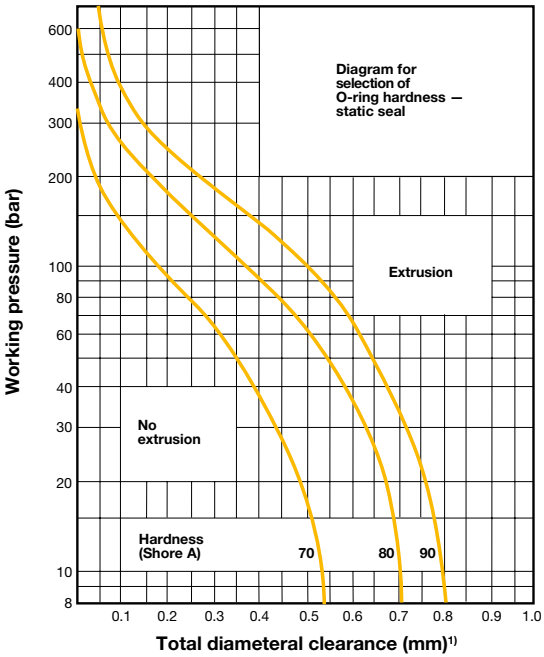

Basis for curves

- 100,000 pressure cycles at the rate of 60 per minute from zero to the indicated pressure
- Maximum temperature (i.e., test temperature) 70 °C
- No back-up rings
- Total diametral clearance must include cylinder expansion due to pressure
- Apply a reasonable safety factor in practical applications to allow for excessively sharp edges and other imperfections and for higher temperatures

[1] Reduce the clearance shown by 60 % when using silicone or fluorosilicone Elastomers.

Tel: +45 63 12 83 00 | Email: ps@hymatik.com | www.hymatik.com | Hvidkaervej 27a, DK-5250 Odense SV, Denmark

Tel: +45 63 12 83 00 | Email: ps@hymatik.com | www.hymatik.com | Hvidkaervej 27a, DK-5250 Odense SV, Denmark

The following charts are included to facilitate engineering analysis. Additional information is available in the Parker O-Ring Handbook.

Parker offers O-rings for use in static as well as dynamic sealing applications. Static seals are those where the mating parts of the gland do not have movement relative to each other. These seals include face, radial, dovetail. Examples of these seals and the corresponding design charts are found on the following pages. Dynamic seals include reciprocating, floating pneumatic, oscillating, and rotary applications. Dynamic seals are defined by one of the gland parts having movement relative to the other part. Gland design recommendations for a reciprocating seal are provided also in this chapter.

For further design assistance and recommendations contact a Parker O-ring applications engineer.

Tel: +45 63 12 83 00 | Email: ps@hymatik.com | www.hymatik.com | Hvidkaervej 27a, DK-5250 Odense SV, Denmark

Static seals – axial

The O-Ring cross-section is deformed in an axial direction. As the O-ring makes a relative movement under pressure loading, it is important to observe the direction of pressure:

- If pressure acts from the inside, the O-Ring should touch the gland outer diameter (optimally compressed by 1 to 3 % of its circumference).
- If pressure acts from the outside, the O-Ring inner diameter should touch the inner diameter of the gland (stretched by up to 6 %).

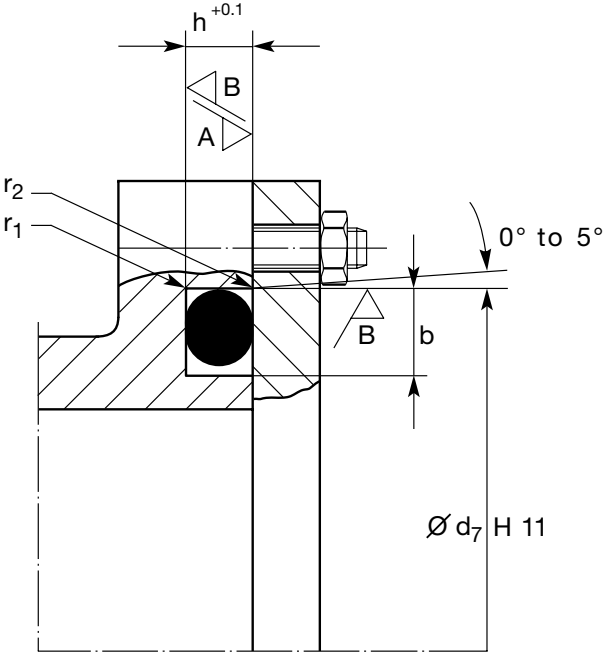

Pressure from inside

Tel: +45 63 12 83 00 | Email: ps@hymatik.com | www.hymatik.com | Hvidkaervej 27a, DK-5250 Odense SV, Denmark

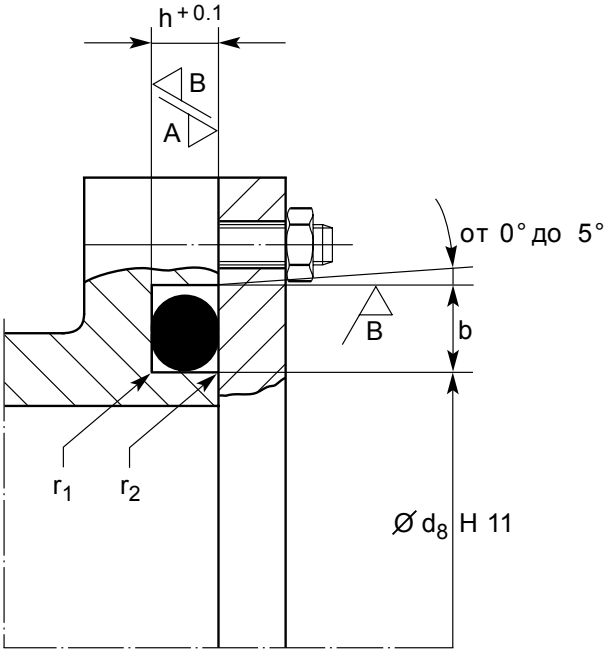

Pressure from outside

Surface finish roughness – static seal

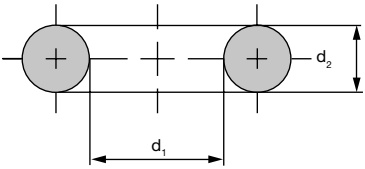

Tel: +45 63 12 83 00 | Email: ps@hymatik.com | www.hymatik.com | Hvidkaervej 27a, DK-5250 Odense SV, Denmark

Rectangular gland dimensions – axial deformation

d_2	$h^{+0.10}$	$b^{+0.20}$	$r_{1.00}$	r_2
1.50	1.10	1.90	0.20 - 0.40	0.20 - 0.40
1.78	**1.30**	**2.40**	0.20 - 0.40	0.20 - 0.40
2.00	1.50	2.60	0.20 - 0.40	0.20 - 0.40
2.50	2.00	3.20	0.20 - 0.40	0.20 - 0.40
2.62	**2.10**	**3.60**	0.20 - 0.40	0.20 - 0.40
3.00	2.30	3.90	0.40 - 0.80	0.20 - 0.40
3.53	**2.80**	**4.80**	0.40 - 0.80	0.20 - 0.40
4.00	3.25	5.20	0.40 - 0.80	0.20 - 0.40
5.00	4.00	6.50	0.40 - 0.80	0.20 - 0.40
5.33	**4.35**	**7.20**	0.40 - 0.80	0.20 - 0.40
6.00	5.00	7.80	0.80 - 1.20	0.20 - 0.40
6.99	**5.75**	**9.60**	0.80 - 1.20	0.20 - 0.40
8.00	6.80	10.40	0.80 - 1.20	0.20 - 0.40
9.00	7.70	11.70	0.80 - 1.20	0.20 - 0.40
10.00	8.70	13.00	0.80 - 1.20	0.20 - 0.40
12.00	10.60	15.60	0.80 - 1.20	0.20 - 0.40

The DIN ISO 3601 sizes are preferable and shown here in bold.

Surface finish roughness – static seal

Surface	Pressure	Surface finish roughness, percentage contact area t_p > 50 % R_a [µm]	$R_{max.}$
A contact surface	non-pulsating	1.60	6.30
A contact surface	pulsating	0.80	3.20
B groove base and sides	non-pulsating	3.20	12.50
B groove base and sides	pulsating	1.60	6.30

Static seals – radial

Gland in inside element

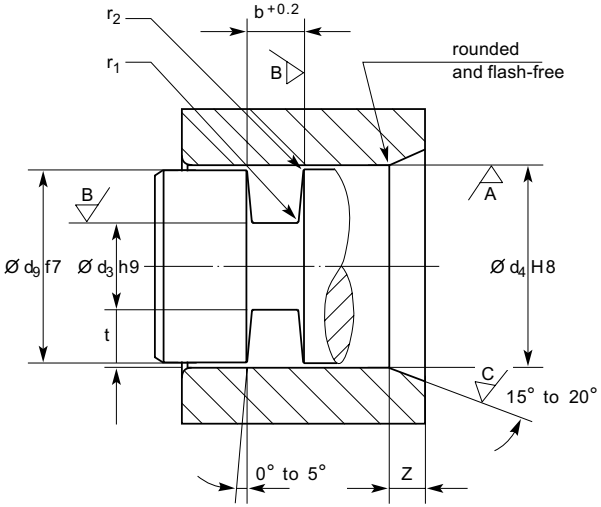

Gland in outside element

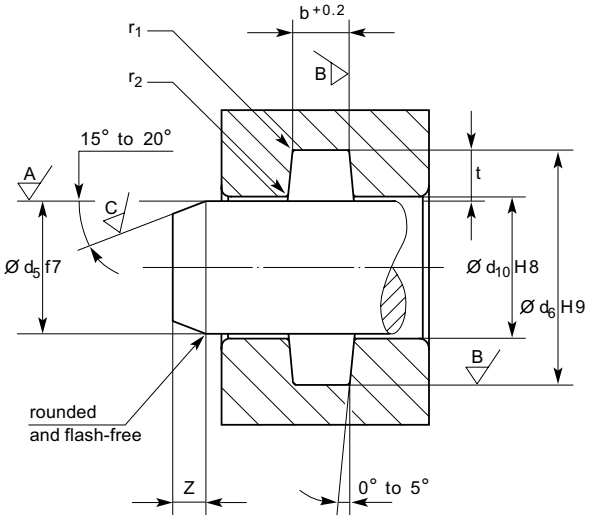

Tel: +45 63 12 83 00 | Email: ps@hymatik.com | www.hymatik.com | Hvidkaervej 27a, DK-5250 Odense SV, Denmark

Design information and installation guidelines

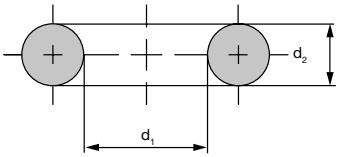

Gland dimensions – radial deformation

d_2	$t^{1)}$	$b^{+0.20}$	z	$r_{1.0}$	r_2
1.50	1.10	1.90	1.5	0.2 - 0.4	0.1 - 0.3
1.78	**1.40**	**2.40**	**1.5**	0.2 - 0.4	0.1 - 0.3
2.00	1.50	2.60	1.5	0.2 - 0.4	0.1 - 0.3
2.50	2.00	3.20	1.5	0.2 - 0.4	0.1 - 0.3
2.62	**2.10**	**3.60**	**1.5**	0.2 - 0.4	0.1 - 0.3
3.00	2.30	3.90	2.0	0.4 - 0.8	0.1 - 0.3
3.53	**2.90**	**4.80**	**2.0**	0.4 - 0.8	0.1 - 0.3
4.00	3.25	5.20	2.0	0.4 - 0.8	0.1 - 0.3
5.00	4.10	6.50	3.0	0.4 - 0.8	0.1 - 0.3
5.33	**4.50**	**7.20**	**3.0**	0.4 - 0.8	0.1 - 0.3
6.00	5.00	7.80	3.0	0.4 - 0.8	0.1 - 0.3
6.99	**5.90**	**9.60**	**3.6**	0.8 - 1.2	0.1 - 0.3
8.00	6.80	10.40	4.0	0.8 - 1.2	0.1 - 0.3
9.00	7.70	11.70	4.5	0.8 - 1.2	0.1 - 0.3
10.00	8.70	13.00	4.5	0.8 - 1.2	0.1 - 0.3
12.00	10.60	15.60	4.5	0.8 - 1.2	0.1 - 0.3

[1)] The tolerances are calculated from d_3h9 + d_4H8 or d_5f7 + d_6H9.
The DIN ISO 3601 sizes are preferable and shown here in bold.

Surface finish roughness – static seal

Surface	Pressure	Surface finish roughness, percentage contact area t_p > 50 % R_a [µm]	$R_{max.}$
A contact surface	non-pulsating	1.60	6.30
A contact surface	pulsating	0.80	3.20
B groove base and sides	non-pulsating	3.20	12.50
B groove base and sides	pulsating	1.60	6.30
C surface finish of lead-in edge chamfer	-	3.20	12.50

Tel: +45 63 12 83 00 | Email: ps@hymatik.com | www.hymatik.com | Hvidkaervej 27a, DK-5250 Odense SV, Denmark

Static seals – dovetail groove

The dovetail groove shape is used where it is necessary to keep an O-Ring in its position, e.g. during surface work, when opening and closing tools or machines where otherwise the O-Ring would drop out of the gland. The machining of the gland is difficult and costly.

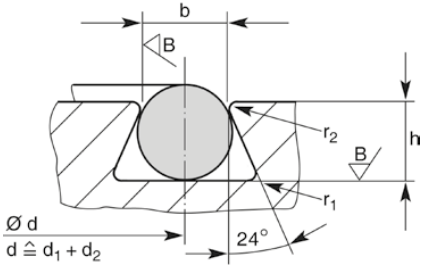

Dovetail gland
d = gland mean diameter
The gland width is measured before deburring the edges.
Radius r_2 is selected so that the O-Ring is not damaged during assembly and cannot be trapped in the gap under high pressure.

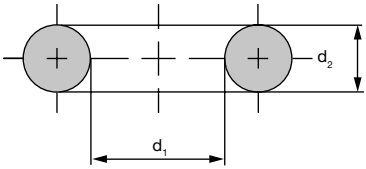

Dovetail gland dimensions

d_2	h	$b^{+0.10}$	$r_{2.00}$	$r_{1.00}$
1.78	1.25 $^{+0.05}$	1.40	0.10 - 0.30	0.4 - 0.6
2.62	2.05 $^{+0.05}$	2.10	0.10 - 0.30	0.6 - 0.8
3.53	2.80 $^{+0.05}$	2.85	0.10 - 0.30	0.8 - 1.0
5.33	4.55 $^{+0.08}$	4.35	0.10 - 0.30	1.0 - 1.3
6.99	5.85 $^{+0.08}$	5.85	0.10 - 0.30	1.3 - 1.6

Surface finish roughness – static seal

Surface	Pressure	Surface finish roughness, percentage contact area t_p > 50 % R_a [µm]	$R_{max.}$
A contact surface	non-pulsating	1.60	6.30
A contact surface	pulsating	0.80	3.20
B groove base and sides	non-pulsating	3.20	12.50
B groove base and sides	pulsating	1.60	6.30

Dynamic seals – hydraulics

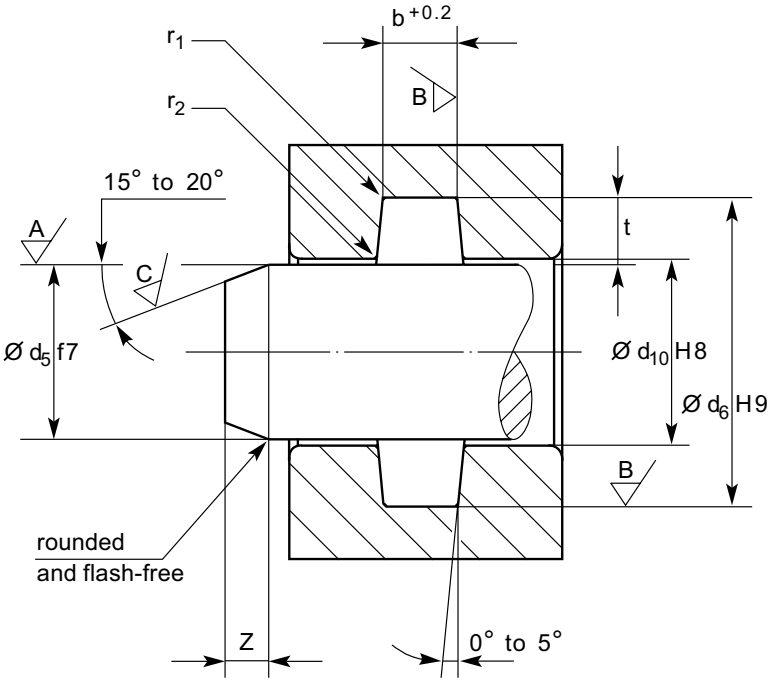

Rod seal – hydraulic and pneumatic

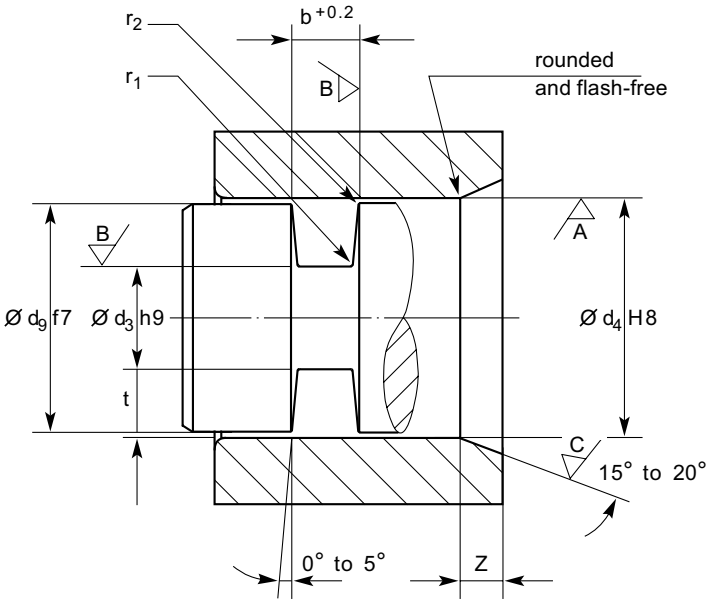

Piston seal – hydraulic and pneumatic

Surface-finish roughness – reciprocating seal – hydraulic

Surface	Surface finish roughness, percentage contact area t_p > 50 % R_a [µm]	$R_{max.}$
A contact surface	0.40	1.60
B groove base and sides	1.60	6.30
C surface finish of lead-in edge chamfer	3.20	12.50

Tel: +45 63 12 83 00 | Email: ps@hymatik.com | www.hymatik.com | Hvidkaervej 27a, DK-5250 Odense SV, Denmark

Gland dimensions – dynamic hydraulic seal

d_2	$t^{1)}$	$b^{+0.20}$	z	$r_{1.00}$	r_2
1.50	1.30	1.90	1.50	0.20 - 0.40	0.10 - 0.30
1.78	**1.45**	**2.40**	1.50	0.20 - 0.40	0.10 - 0.30
2.00	1.70	2.60	1.50	0.20 - 0.40	0.10 - 0.30
2.50	2.10	3.30	1.50	0.20 - 0.40	0.10 - 0.30
2.62	**2.20**	**3.60**	1.50	0.20 - 0.40	0.10 - 0.30
3.00	2.60	3.90	1.80	0.40 - 0.80	0.10 - 0.30
3.53	**3.05**	**4.80**	1.80	0.40 - 0.80	0.10 - 0.30
4.00	3.50	5.30	1.80	0.40 - 0.80	0.10 - 0.30
5.00	4.45	6.70	2.70	0.40 - 0.80	0.10 - 0.30
5.33	**4.65**	**7.10**	2.70	0.40 - 0.80	0.10 - 0.30
6.00	5.40	8.00	3.60	0.40 - 0.80	0.10 - 0.30
6.99	**6.20**	**9.50**	3.60	0.40 - 0.80	0.10 - 0.30

[1)] The tolerances are calculated from d_3h9 + d_4H8 or d_5f7 + d_6H9.

The DIN ISO 3601 sizes are preferable and shown here in bold.

Additional information to gland dimensions for O-rings with anti-extrusion rings, the surface-finish-roughness and the gland dimensions of the pneumatic application is available in the Parker O-Ring Handbook.

Tel: +45 63 12 83 00 | Email: ps@hymatik.com | www.hymatik.com | Hvidkaervej 27a, DK-5250 Odense SV, Denmark

The following tables provide dimensions for standard shrinkage materials only. These correspond to AS568B dimensions. O-rings manufactured from compounds with different shrinkage rates will provide slightly different dimensions and tolerances when standard tooling is used. Custom tooling may be necessary for some compounds in order to meet AS568B dimensions and tolerances.
For further information contact a Parker O-ring applications engineer.

Characteristics of the 2-xxx series
The 2-xxx series from Parker offers the following advantages.

Ex-stock in following compounds:
N0674-70 (NBR 70 Shore A)
N0552-90 (NBR 90 Shore A)
E0540-80 (EPDM 80 Shore A)
V0747-75 (FKM 75 Shore A)

For each 2-xxx series O-ring we can offer a Parker Parbak® back-up ring to fit. This is particularly important where large clearance gaps and/or high pressures exist (see chapter Parbak® back-up ring).

O-rings of the 2-xxx series correspond to the standard ISO 3601.

Tel: +45 63 12 83 00 | Email: ps@hymatik.com | www.hymatik.com | Hvidkaervej 27a, DK-5250 Odense SV, Denmark

O-ring dimension

2-0xx sizes: cross-section d_2 = 1.78 mm

Parker no.	Ø d mm	Cross-section d_2
2-001*	0.74	1.02
2-002*	1.07	1.27
2-003*	1.42	1.52
2-004	1.78	1.78
2-005	2.57	1.78
2-006	2.9	1.78
2-007	3.68	1.78
2-008	4.47	1.78
2-009	5.28	1.78
2-010	6.07	1.78
2-011	7.65	1.78
2-012	9.25	1.78
2-013	10.82	1.78
2-014	12.42	1.78
2-015	14	1.78
2-016	15.6	1.78
2-017	17.17	1.78
2-018	18.17	1.78
2-019	20.35	1.78
2-020	21.95	1.78
2-021	23.52	1.78
2-022	25.12	1.78
2-023	26.7	1.78
2-024	28.3	1.78
2-025	29.87	1.78
2-026	31.47	1.78
2-027	33.05	1.78
2-028	34.65	1.78
2-029	37.82	1.78
2-030	41	1.78
2-031	44.17	1.78
2-032	47.35	1.78
2-033	50.52	1.78
2-034	53.7	1.78
2-035	56.87	1.78
2-036	60.05	1.78
2-037	63.22	1.78
2-038	66.4	1.78
2-039	69.57	1.78
2-040	72.75	1.78
2-041	75.92	1.78
2-042	82.27	1.78
2-043	88.62	1.78
2-044	94.97	1.78
2-045	101.32	1.78
2-046	107.67	1.78
2-047	114.02	1.78
2-048	120.37	1.78
2-049	126.72	1.78
2-050	133.07	1.78

* Please note the differing cross-sections for these sizes.

Tel: +45 63 12 83 00 | Email: ps@hymatik.com | www.hymatik.com | Hvidkaervej 27a, DK-5250 Odense SV, Denmark

2-1xx sizes: cross-section d_2 = 2.62 mm

Parker no.	Ø d mm	Cross-section d_2
2-102	1.24	2.62
2-103	2.06	2.62
2-104	2.84	2.62
2-105	3.63	2.62
2-106	4.42	2.62
2-107	5.23	2.62
2-108	6.02	2.62
2-109	7.59	2.62
2-110	9.19	2.62
2-111	10.77	2.62
2-112	12.37	2.62
2-113	13.94	2.62
2-114	15.54	2.62
2-115	17.12	2.62
2-116	18.72	2.62
2-117	20.29	2.62
2-118	21.89	2.62
2-119	23.47	2.62
2-120	25.07	2.62
2-121	26.64	2.62
2-122	28.24	2.62
2-123	29.82	2.62
2-124	31.42	2.62
2-125	32.99	2.62
2-126	34.59	2.62
2-127	36.17	2.62
2-128	37.77	2.62
2-129	39.34	2.62
2-130	40.94	2.62
2-131	42.52	2.62
2-132	44.12	2.62
2-133	45.69	2.62
2-134	47.29	2.62
2-135	48.9	2.62
2-136	50.47	2.62
2-137	52.07	2.62
2-138	53.64	2.62
2-139	55.25	2.62
2-140	56.82	2.62
2-141	58.42	2.62
2-142	59.99	2.62
2-143	61.6	2.62
2-144	63.17	2.62
2-145	64.77	2.62
2-146	66.34	2.62
2-147	67.95	2.62
2-148	69.52	2.62
2-149	71.12	2.62
2-150	72.69	2.62
2-151	75.87	2.62
2-152	82.22	2.62
2-153	88.57	2.62
2-154	94.92	2.62
2-155	101.27	2.62
2-156	107.62	2.62
2-157	113.97	2.62
2-158	120.32	2.62
2-159	126.67	2.62
2-160	133.02	2.62
2-161	139.37	2.62
2-162	145.72	2.62
2-163	152.07	2.62
2-164	158.42	2.62
2-165	164.77	2.62
2-166	171.12	2.62
2-167	177.47	2.62
2-168	183.82	2.62
2-169	190.17	2.62
2-170	196.52	2.62
2-171	202.87	2.62
2-172	209.22	2.62
2-173	215.57	2.62
2-174	221.92	2.62
2-175	228.27	2.62
2-176	234.62	2.62
2-177	240.97	2.62
2-178	247.32	2.62

Tel: +45 63 12 83 00 | Email: ps@hymatik.com | www.hymatik.com | Hvidkaervej 27a, DK-5250 Odense SV, Denmark

O-ring dimension

2-2xx sizes: cross-section d_2 = 3.53 mm

Parker no.	Ø d mm	Cross-section d_2
2-201	4.34	3.53
2-202	5.94	3.53
2-203	7.52	3.53
2-204	9.12	3.53
2-205	10.12	3.53
2-206	12.29	3.53
2-207	13.87	3.53
2-208	15.47	3.53
2-209	17.04	3.53
2-210	18.64	3.53
2-211	20.22	3.53
2-212	21.82	3.53
2-213	23.39	3.53
2-214	24.99	3.53
2-215	26.57	3.53
2-216	28.17	3.53
2-217	29.74	3.53
2-218	31.34	3.53
2-219	32.92	3.53
2-220	34.52	3.53
2-221	36.09	3.53
2-222	37.69	3.53
2-223	40.87	3.53
2-224	44.04	3.53
2-225	47.22	3.53
2-226	50.39	3.53
2-227	53.57	3.53
2-228	56.74	3.53
2-229	59.92	3.53
2-230	63.09	3.53
2-231	66.27	3.53
2-232	69.44	3.53
2-233	72.62	3.53
2-234	75.79	3.53
2-235	78.97	3.53
2-236	82.14	3.53
2-237	85.32	3.53
2-238	88.49	3.53
2-239	91.67	3.53
2-240	94.84	3.53
2-241	98.02	3.53
2-242	101.19	3.53
2-243	104.37	3.53
2-244	107.54	3.53
2-245	110.72	3.53
2-246	113.89	3.53
2-247	117.07	3.53
2-248	120.24	3.53
2-249	123.42	3.53
2-250	126.59	3.53
2-251	129.77	3.53
2-252	132.94	3.53
2-253	136.12	3.53
2-254	139.29	3.53
2-255	142.47	3.53
2-256	145.64	3.53
2-257	148.82	3.53
2-258	151.99	3.53
2-259	158.34	3.53
2-260	164.69	3.53
2-261	171.04	3.53
2-262	177.39	3.53
2-263	183.74	3.53
2-264	190.09	3.53
2-265	196.44	3.53
2-266	202.79	3.53
2-267	209.14	3.53
2-268	215.49	3.53
2-269	221.84	3.53
2-270	228.19	3.53
2-271	234.54	3.53
2-272	240.89	3.53
2-273	247.24	3.53
2-274	253.59	3.53
2-275	266.29	3.53
2-276	278.99	3.53
2-277	291.69	3.53
2-278	304.39	3.53
2-279	329.79	3.53
2-280	355.19	3.53
2-281	380.59	3.53
2-282	405.26	3.53
2-283	430.66	3.53
2-284	456.06	3.53

Tel: +45 63 12 83 00 | Email: ps@hymatik.com | www.hymatik.com | Hvidkaervej 27a, DK-5250 Odense SV, Denmark

2-3xx sizes: cross-section d_2 = 5.33 mm

Parker no.	Ø d mm	Cross-section d_2
2-309	10.46	5.33
2-310	12.07	5.33
2-311	13.64	5.33
2-312	15.24	5.33
2-313	16.81	5.33
2-314	18.42	5.33
2-315	19.99	5.33
2-316	21.59	5.33
2-317	23.16	5.33
2-318	24.77	5.33
2-319	26.34	5.33
2-320	27.94	5.33
2-321	29.51	5.33
2-322	31.12	5.33
2-323	32.69	5.33
2-324	34.29	5.33
2-325	37.47	5.33
2-326	40.64	5.33
2-327	43.82	5.33
2-328	46.99	5.33
2-329	50.17	5.33
2-330	53.34	5.33
2-331	56.52	5.33
2-332	59.69	5.33
2-333	62.87	5.33
2-334	66.04	5.33
2-335	69.22	5.33
2-336	72.39	5.33
2-337	75.57	5.33
2-338	78.74	5.33
2-339	81.92	5.33
2-340	85.09	5.33
2-341	88.27	5.33
2-342	91.44	5.33
2-343	94.62	5.33
2-344	97.79	5.33
2-345	100.97	5.33
2-346	104.14	5.33
2-347	107.32	5.33
2-348	110.49	5.33
2-349	113.67	5.33
2-350	116.84	5.33
2-351	120.02	5.33
2-352	123.19	5.33
2-353	126.37	5.33
2-354	129.54	5.33
2-355	132.72	5.33
2-356	135.89	5.33
2-357	139.07	5.33
2-358	142.24	5.33
2-359	145.42	5.33
2-360	148.59	5.33
2-361	151.77	5.33
2-362	158.12	5.33
2-363	164.47	5.33
2-364	170.82	5.33
2-365	177.17	5.33
2-366	183.52	5.33
2-367	189.87	5.33
2-368	196.22	5.33
2-369	202.57	5.33
2-370	208.92	5.33
2-371	215.27	5.33
2-372	221.62	5.33
2-373	227.97	5.33
2-374	234.32	5.33
2-375	240.67	5.33
2-376	247.02	5.33
2-377	253.37	5.33
2-378	266.07	5.33
2-379	278.77	5.33
2-380	291.47	5.33
2-381	304.17	5.33
2-382	329.57	5.33
2-383	354.97	5.33
2-384	380.37	5.33
2-385	405.26	5.33
2-386	430.66	5.33
2-387	456.06	5.33
2-388	481.41	5.33
2-389	506.81	5.33
2-390	532.21	5.33
2-391	557.61	5.33
2-392	582.68	5.33
2-393	608.08	5.33
2-394	633.48	5.33
2-395	658.88	5.33

O-ring dimension

2-4xx sizes: cross-section d_2 = 6.99 mm

Parker no.	Ø d mm	Cross-section d_2
2-425	113.67	6.99
2-426	116.84	6.99
2-427	120.02	6.99
2-428	123.19	6.99
2-429	126.37	6.99
2-430	129.54	6.99
2-431	132.72	6.99
2-432	135.89	6.99
2-433	139.07	6.99
2-434	142.24	6.99
2-435	145.42	6.99
2-436	148.59	6.99
2-437	151.77	6.99
2-438	158.12	6.99
2-439	164.47	6.99
2-440	170.82	6.99
2-441	177.17	6.99
2-442	183.52	6.99
2-443	189.87	6.99
2-444	196.22	6.99
2-445	202.57	6.99
2-446	215.27	6.99
2-447	227.97	6.99
2-448	240.67	6.99
2-449	253.37	6.99
2-450	266.07	6.99
2-451	278.77	6.99
2-452	291.47	6.99
2-453	304.17	6.99
2-454	316.87	6.99
2-455	329.57	6.99
2-456	342.27	6.99
2-457	354.97	6.99
2-458	367.67	6.99
2-459	380.37	6.99
2-460	393.07	6.99
2-461	405.26	6.99
2-462	417.96	6.99
2-463	430.66	6.99
2-464	443.36	6.99
2-465	456.06	6.99
2-466	468.76	6.99
2-467	481.46	6.99
2-468	494.16	6.99
2-469	506.86	6.99
2-470	532.26	6.99
2-471	557.66	6.99
2-472	582.68	6.99
2-473	608.08	6.99
2-474	633.48	6.99
2-475	658.88	6.99

Tel: +45 63 12 83 00 | Email: ps@hymatik.com | www.hymatik.com | Hvidkaervej 27a, DK-5250 Odense SV, Denmark

3-xxx sizes

Parker no.	Ø d mm	Cross-section d_2
3-902	6.07	1.63
3-903	7.65	1.63
3-904	8.92	1.83
3-905	10.52	1.83
3-906	11.89	1.98
3-907	13.46	2.08
3-908	16.36	2.21
3-910	19.18	2.46
3-911	21.92	2.95
3-912	23.47	2.95
3-913	25.04	2.95
3-914	26.59	2.95
3-916	29.74	2.95
3-918	34.42	2.95
3-920	37.47	3
3-928	53.09	3
3-932	59.36	3

Tel: +45 63 12 83 00 | Email: ps@hymatik.com | www.hymatik.com | Hvidkaervej 27a, DK-5250 Odense SV, Denmark

O-ring dimension

5-xxx sizes

Parker no.	Ø d mm	Cross-section d_2
5-035	45.36	3.53
5-037	51.71	3.53
5-051	1.78	1.02
5-052	6.86	1.78
5-092	701.68	6.99
5-108	4.47	1.27
5-157	33.99	2.34
5-190	3.35	1.78
5-212	9.75	1.78
5-239	14.48	2.69
5-243	15.34	2.62
5-256	17.96	2.62
5-321	39.6	3.53
5-330	42.52	5.33
5-332	42.85	3.53
5-361	67.84	3.53
5-381	88.27	6.99
5-434	180.54	6.99
5-445	210.24	6.99
5-488	316.56	2.62
5-525	425.83	3.18
5-578	2.6	1.9
5-579	3.4	1.9
5-580	4.2	1.9
5-581	4.9	1.9
5-582	5.7	1.9
5-583	6.4	1.9
5-584	7.2	1.9
5-585	8	1.88
5-586	8.9	1.9
5-587	8.9	2.7
5-588	10.5	2.7
5-589	12.1	2.7
5-590	13.59	2.69
5-591	15.1	2.7
5-592	16.9	2.7
5-593	18.4	2.7
5-594	18.3	3.6
5-595	19.8	3.6
5-596	21.3	3.6
5-597	23	3.6
5-598	24.6	3.6
5-599	26.2	3.6
5-600	27.8	3.6
5-601	29.3	3.6
5-602	30.8	3.6
5-603	32.5	3.6
5-604	34.1	3.6
5-605	35.6	3.6
5-606	37.3	3.6
5-612	8.74	1.78
5-613	11.1	1.78
5-614	9.93	2.62
5-615	11.91	2.62
5-616	13.11	2.62
5-617	15.88	2.62
5-618	25.81	3.53
5-643	16.51	1.14
5-664	8.13	1.78
5-670	36.5	1.78
5-673	7.75	1.88
5-676	15.49	1.47
5-683	3.1	1.6
5-686	6.3	2.39
5-690	17.3	2.4
5-700	9	3
5-701	49.2	3.53
5-702	58.74	3.53
5-703	65.09	3.53
5-704	71.44	3.53
5-705	74.61	3.53
5-716	9.19	3
5-805	64.39	1.78
5-816	80.31	1.78
5-843	118.72	2.62
5-850	125.09	6.6
5-976	264.79	6.6

Tel: +45 63 12 83 00 | Email: ps@hymatik.com | www.hymatik.com | Hvidkaervej 27a, DK-5250 Odense SV, Denmark

6-xxx sizes

Parker no.	Ø d mm	Cross-section d_2
6-001	6	2
6-002	8	2
6-003	10	2
6-005	15	2
6-006	16.7	1.45
6-007	18	3.15
6-008	21	2
6-009	47.5	4
6-010	9	1.5
6-011	7	1.5
6-012	9.3	2.4
6-013	89.5	3
6-015	42	1.5
6-016	13	2.5
6-017	20	2.5
6-018	3	1
6-019	4	1.1
6-020	2.7	1.5
6-021	3.5	1.2
6-022	24	2
6-023	27.3	2.4
6-025	101	3
6-026	137	3
6-027	40	2
6-028	7	2.5
6-030	73	3
6-031	70	3
6-032	118	2
6-033	13	1.5
6-034	29.5	1.5
6-035	4	1.5
6-036	22	2.5
6-037	30	3.15
6-038	6	1.5
6-039	19	2.5
6-040	15	1.6
6-041	17.9	1.25
6-042	16	3
6-043	15	3
6-044	17	2
6-045	72	3
6-046	38	2
6-047	35	2
6-048	30	2
6-049	27	2
6-050	24.2	3
6-051	50	2
6-052	7.1	1.6
6-053	12	1.5
6-054	45	2
6-055	50	2.5
6-056	30	3
6-058	12.3	2.4
6-059	135	3.23
6-060	135	3.43
6-061	146	3.23
6-063	5.35	1.5
6-065	12	2
6-066	23	2.5
6-067	14	2.5
6-069	5	1.5
6-070	8.3	2.4
6-072	15	3.2
6-074	8	1.5
6-075	13	2
6-076	18	2
6-078	20	1.5
6-079	6	5
6-080	7	3
6-082	45	1.5
6-083	10	1.5
6-084	11	1.5
6-085	15	1.8
6-086	11	2
6-087	18	1.5
6-088	22	1.5
6-089	21	3.5
6-090	14	2
6-091	7.5	1.5
6-092	24.8	1.5
6-094	106	3
6-095	132	3
6-096	13.5	2.75
6-097	31	4.5
6-099	20	1.3
6-100	91	3
6-101	28	1.5
6-102	40.6	4
6-103	161	3
6-104	4	2
6-105	10	2.5
6-106	15	2.5
6-107	60	4.1
6-108	79.6	3.2
6-109	58	4
6-110	5	2
6-112	53	6.5
6-113	53	5
6-114	60	5
6-115	125	8
6-116	10	1
6-118	15	1.5
6-119	19.5	1.5
6-120	9	1.8
6-121	81	3
6-122	186.44	6.99

Tel: +45 63 12 83 00 | Email: ps@hymatik.com | www.hymatik.com | Hvidkaervej 27a, DK-5250 Odense SV, Denmark

O-ring dimension

Parker no.	Ø d mm	Cross-section d_2
6-123	118.5	3
6-124	12	3
6-125	18	4
6-126	25.3	1.6
6-128	15	5
6-129	13.23	1.78
6-130	20	3
6-132	18	2.5
6-133	4.7	1.9
6-134	7.5	2.5
6-135	14.3	2.4
6-136	33	2
6-137	100	5
6-138	2.5	1.3
6-139	22	2
6-140	28	2
6-141	55	2
6-142	30.7	2
6-143	14	1.5
6-146	16	2
6-147	27	3
6-148	177	2
6-149	205	2
6-150	227	2
6-151	63	4
6-152	210	5
6-153	320	5.33
6-154	36.3	1.78
6-155	48	3
6-156	30	2.5
6-157	98	3
6-158	437	3
6-159	46.02	3.53
6-160	13.75	2.8
6-161	9	2.5
6-162	7.3	2.7

Parker no.	Ø d mm	Cross-section d_2
6-163	13.1	1.6
6-164	420	5
6-165	420	3.5
6-166	3.9	1.8
6-167	2.5	1.2
6-168	2.5	1.7
6-170	159	4
6-173	422	2
6-174	100	2.5
6-175	273.05	3.53
6-176	577.85	6.99
6-177	18.3	2.4
6-178	74	2
6-179	533.4	3.18
6-180	28	2.2
6-183	219	5.3
6-184	83.8	2.62
6-189	25.5	2
6-190	840	12
6-192	8.1	1.6
6-193	44.35	3
6-194	49.5	3
6-195	79.5	3
6-198	12.5	2
6-202	514	8
6-203	367	3.5
6-204	381	5
6-205	39.2	3
6-206	15.3	2.4
6-207	13	3.5
6-208	26.7	2.5
6-209	398	8
6-212	20.34	4.25
6-214	4.5	1.5
6-215	425	6
6-216	90	3

Parker no.	Ø d mm	Cross-section d_2
6-218	10.6	2
6-221	38	5
6-222	150	5.4
6-223	15.8	2.4
6-224	138	6
6-226	200	6
6-227	42	3
6-228	740	10
6-229	837	10
6-230	882	10
6-232	984	10
6-233	602	8
6-234	283	12
6-235	637	10
6-236	689	10
6-237	786	10
6-238	285	12
6-239	1029	10
6-240	1075	10
6-241	291	6
6-242	63	2.5
6-243	67	1.5
6-245	1154	10
6-247	624	6.99
6-248	783	6.99
6-249	910	6.99
6-250	936	6.99
6-251	3.7	1.9
6-252	231.5	6
6-253	106.8	2.66
6-254	218	12
6-255	126	5
6-256	480.06	10
6-257	93.39	1.47
6-258	17.96	2.62
6-260	506	2.62

Tel: +45 63 12 83 00 | Email: ps@hymatik.com | www.hymatik.com | Hvidkaervej 27a, DK-5250 Odense SV, Denmark

Parker no.	Ø d mm	Cross-section d_2
6-261	504	6.99
6-262	532	7
6-263	22.7	1.5
6-265	619.5	8
6-266	693.5	10.1
6-267	734	6.99
6-268	827	7
6-269	950.5	12.06
6-270	1046	7
6-271	1103	10
6-272	69.24	3.4
6-273	196	12
6-274	115	3
6-275	20.3	2.4
6-276	88	3
6-277	8.79	1.14
6-278	622	8
6-279	810	7.1
6-280	1016	7
6-281	241	7
6-282	171	11
6-283	330	6
6-285	21.7	0.73
6-286	21.82	1
6-287	22.89	1
6-288	24.32	1
6-289	25.79	1
6-290	30.3	2.4
6-291	37	2.5
6-292	40	3
6-293	47.2	5.7
6-294	74.2	5.7
6-295	19	0.8
6-296	27.71	1.02
6-297	16.58	1.5
6-298	23.6	1.02

Parker no.	Ø d mm	Cross-section d_2
6-299	191	1.78
6-300	19.8	2.4
6-301	677	7
6-302	955	12.6
6-303	763.01	6.99
6-304	887	6.99
6-305	736	3.53
6-306	2.2	1.6
6-307	3.33	1.02
6-308	18.5	1.5
6-309	87.3	2
6-311	7	2
6-313	16.5	2.7
6-314	31.02	3
6-316	67	2.5
6-317	7.8	3.6
6-318	151.7	5.6
6-320	608	10
6-321	700	10
6-322	810	10
6-323	45	2.5
6-324	31	2.5
6-328	500	3.53
6-329	36	2.5
6-330	850	10
6-331	431.8	7.1
6-332	1011	5.33
6-333	1042	5.33
6-334	960	5.33
6-335	914	5.33
6-336	262	5.33
6-337	41.4	2.62
6-338	5.6	2.4
6-339	94.5	3
6-340	14.6	2.4
6-341	137.3	8

Parker no.	Ø d mm	Cross-section d_2
6-342	204	8
6-343	21.5	1.78
6-344	6.2	1.5
6-345	8.2	1.5
6-346	9.4	2.1
6-347	11.4	2.1
6-348	13.4	2.1
6-349	15.4	2.1
6-350	19.4	2.1
6-351	23.7	2.8
6-352	29.7	2.8
6-353	38.7	2.8
6-354	46.7	2.8
6-356	22.1	1.6
6-360	19	2
6-361	3.3	2.4
6-363	865	12
6-364	1.98	0.84
6-366	11.89	1.78
6-367	17.81	1.02
6-369	1.5	1
6-370	48	2
6-372	720	6.99
6-373	9.53	1.6
6-374	6.3	1.6
6-375	10.25	1.4
6-376	25	5
6-377	35	5.3
6-379	138	2.1
6-380	594.51	7.14
6-381	647.7	6.99
6-382	20.2	3
6-385	1071	14.4
6-387	25.8	3.3
6-388	17.4	2.5
6-389	723.9	6.99

Tel: +45 63 12 83 00 | Email: ps@hymatik.com | www.hymatik.com | Hvidkaervej 27a, DK-5250 Odense SV, Denmark

O-ring dimension

Parker no.	Ø d mm	Cross-section d_2
6-390	8	3
6-392	99	6.99
6-393	1060	10
6-394	514	8
6-395	9.35	1.6
6-396	18.2	3
6-397	14.5	1.6
6-399	94.5	3
6-400	27	1.5
6-401	4.5	1
6-402	3.5	1.25
6-404	19	5
6-405	93.5	9.5
6-407	242	6
6-408	0.8	1.6
6-409	940	10
6-411	60	2.5
6-412	238	5
6-413	100	4
6-414	41.75	2.6
6-415	800	5.33
6-416	65	5.3
6-417	760	5
6-418	1.85	1.5
6-420	4	2.2
6-421	112	3
6-422	607	4
6-423	46.87	2.62
6-425	18	3
6-426	25	4
6-427	57	3
6-428	4	2.5
6-430	21.2	2.4
6-431	44	2
6-432	7.5	2
6-433	38	2.5
6-434	51.5	1.5
6-435	48.4	4.85
6-436	240	12
6-437	8	1
6-438	12	1
6-439	16	1
6-440	6.8	2
6-441	3	1.5
6-442	25	2
6-443	24	6
6-444	159.2	5.7
6-445	82	4
6-446	94	2
6-447	58	2
6-448	119.2	5.7
6-449	41	3
6-451	129.2	5.7
6-452	85.2	9.25
6-453	24	4
6-454	30	4
6-455	62	2.5
6-456	84	3
6-458	400	12
6-459	37.36	2.6
6-460	996	7
6-461	213.68	7.14
6-462	558	10
6-464	76	4.5
6-466	188	4
6-467	528	8
6-468	3.5	1.5
6-469	330	8
6-470	9	2
6-471	11.3	2.4
6-472	33.3	2.4
6-473	13.6	2.5
6-474	63	4.5
6-475	10.3	2.4
6-476	17	1.5
6-480	6.6	1.5
6-483	74	3
6-485	225	5
6-486	7.8	4.6
6-487	2.9	1.02
6-489	21	6
6-491	3.5	1.1
6-492	174	3
6-493	22	1.39
6-494	162.5	3.53
6-495	190	3
6-496	151	3
6-497	27.5	1.5
6-498	90	2
6-499	18.6	2
6-500	66	2
6-501	65	2
6-502	220	3
6-503	19.3	2.4
6-504	120	3
6-505	270	3
6-508	849	7
6-509	819	7
6-510	315	6
6-511	140	3
6-512	144	3.7
6-513	82	2
6-514	250	3
6-515	134	3
6-516	230	3
6-517	335	3
6-518	355	3
6-520	8	2.2

Tel: +45 63 12 83 00 | Email: ps@hymatik.com | www.hymatik.com | Hvidkaervej 27a, DK-5250 Odense SV, Denmark

Parker no.	Ø d mm	Cross-section d_2
6-521	716	8
6-523	65	3
6-524	17	1.1
6-525	41.28	3.53
6-527	974	7
6-528	16	1.5
6-529	524	10
6-530	455	8
6-531	710	5.33
6-532	10	2.2
6-534	1004	8
6-535	680	5
6-536	635	5
6-538	2.4	1.9
6-539	70	4.5
6-540	33	2.5
6-541	41	2.5
6-542	44.2	2.5
6-543	6	1
6-544	24	1.5
6-545	35	4.5
6-546	205	3
6-547	197	3
6-548	5.7	3.2
6-549	3	1.2
6-550	12.5	1.1
6-551	10.8	1.5
6-552	70	2
6-553	304.8	1.78
6-554	17.4	2.1
6-555	37	5
6-556	52	3
6-557	18.6	3.5
6-558	87.2	2.5
6-559	137	14
6-560	59.7	7
6-561	88.3	7
6-562	16	2.5
6-564	8	2.5
6-566	40	2.5
6-568	56	2
6-569	80	2
6-570	215	6
6-571	10.15	1.4
6-572	6.5	2
6-573	19	1.5
6-574	86.84	5.33
6-575	39	2
6-576	160	3
6-577	130	6
6-578	445	8
6-579	87	3
6-580	118.31	3.53
6-581	6.5	1.5
6-582	95.5	3.53
6-583	5	1.2
6-584	13	1
6-585	34.4	3.1
6-586	39.4	3.1
6-587	74.4	3.1
6-588	84.4	3.1
6-589	105	2
6-592	8	1.25
6-593	19.2	3
6-594	42	2.5
6-595	24	2.5
6-596	65	4.5
6-597	875	8
6-598	375	5.34
6-600	209.2	5.7
6-601	100	2
6-602	140	10
6-603	50	4
6-604	240	3
6-605	10	3
6-606	35	2.5
6-607	315	4
6-608	94.2	5.7
6-609	36	2.2
6-610	9	1.2
6-611	25	1.5
6-612	125	3
6-613	4	1
6-614	190	5
6-615	3	2
6-618	234.32	1.78
6-619	20	2
6-621	535.46	7.24
6-622	34	2.8
6-623	149.2	5.7
6-626	580	8
6-627	10.1	1
6-628	19.3	3.65
6-629	210	3
6-630	51	3
6-631	179	3
6-632	16	1.25
6-633	61	4.5
6-634	71	4.5
6-635	236	7
6-636	64	3
6-638	281	5
6-640	97	1.5
6-642	40	1.5
6-641	70	1.5
6-643	57	1.5
6-644	638.89	5.44
6-645	665	5

O-ring dimension

Parker no.	Ø d mm	Cross-section d_2
6-646	32	2.7
6-647	617	7
6-648	820	7
6-649	798	7
6-650	853	7
6-651	9	4
6-652	6	5.2
6-653	664	5
6-654	28	2.5
6-655	174.2	5.7
6-656	26	2
6-657	7	1
6-659	67	3
6-660	27	5
6-661	7.5	1.25
6-662	12	3.8
6-663	30	4.65
6-665	60	3
6-666	24	1
6-667	770	10
6-668	708	10
6-669	450	10
6-670	550	10
6-671	245	10
6-672	364	10
6-673	48.2	1.78
6-674	120	1.5
6-676	84	2.5
6-677	11.5	1
6-678	36	2
6-682	375	10
6-683	15	1
6-684	3.2	1.02
6-686	3.2	1.6
6-687	21.5	1.5
6-688	133.35	5.33
6-689	150	3
6-690	546	7
6-692	8.5	1.5
6-693	130	2.5
6-694	36	2.1
6-698	140	2
6-699	62	3
6-700	96	2
6-701	695	6.99
6-702	707	6.99
6-703	55.3	2
6-704	180	3
6-705	14	3
6-706	189.2	5.7
6-707	865	8.4
6-708	929	6
6-709	565	7
6-710	7.5	1
6-711	388	5
6-713	6	1.25
6-714	1.8	1
6-715	8.8	1
6-716	320	6
6-717	11	2.5
6-718	258.4	1.6
6-719	57	2.5
6-720	93	2
6-722	128	2
6-723	380	4
6-724	102	3
6-725	16.56	1.78
6-726	45	5
6-728	26	1
6-729	78	3
6-730	13	3
6-731	18	1.3
6-733	85	2
6-734	430	12
6-736	3.17	1.02
6-737	13.89	1.3
6-738	5.33	1.02
6-739	56	4.5
6-740	109	3
6-741	428	5.7
6-742	614	7
6-743	93	3
6-745	25.3	2.4
6-746	169.2	5.7
6-748	5.7	1.05
6-749	26	2.5
6-750	45.9	1.5
6-751	5.3	2.4
6-752	34.65	2.6
6-753	39.5	2.6
6-754	76	2.5
6-755	18	5
6-756	148	10
6-757	73	4
6-758	19.75	2.5
6-759	43.25	2.6
6-760	31.95	2.6
6-762	107.31	6.99
6-764	59.6	5.85
6-766	31.7	3.5
6-767	109.4	3.1
6-768	119.6	5.7
6-769	114.4	3.1
6-772	44.7	3.5
6-773	155	10
6-774	12	2.5
6-775	515	10
6-777	10.6	1.8

Tel: +45 63 12 83 00 | Email: ps@hymatik.com | www.hymatik.com | Hvidkaervej 27a, DK-5250 Odense SV, Denmark

Parker no.	Ø d mm	Cross-section d_2
6-779	19	2.65
6-780	21.2	2.65
6-781	28	2.65
6-782	38.7	2.65
6-783	45	2.65
6-784	32.5	3.55
6-785	56	3.55
6-786	67	3.55
6-787	71	3.55
6-788	80	3.55
6-790	80	1.8
6-791	50	4.5
6-792	61	5
6-793	20	1.8
6-794	28	1.8
6-797	2	1
6-798	19	1.8
6-799	468	6
6-800	500	8
6-801	21.2	3.55
6-802	33.5	2.65
6-803	30	3.55
6-804	92.5	3.55
6-805	77	2
6-806	105	3.5
6-807	370	5.5
6-808	20	3.55
6-809	43.7	1.8
6-810	54.5	2.65
6-812	133.5	12
6-813	341	14
6-814	164.2	5.84
6-815	109.2	5.84
6-816	670	10
6-817	590	10
6-818	160	4
6-819	54	3
6-820	79	1.5
6-821	83	1
6-822	85	1.5
6-823	10	2.65
6-824	69	3
6-825	27	3.2
6-826	78	3.5
6-827	470	10
6-831	590	3.5
6-832	96	9
6-833	137	4
6-834	484.86	3.53
6-835	449.5	6.99
6-836	543.5	6.99
6-837	109.2	5.7
6-838	32	4
6-839	10.1	1.78
6-840	282.37	3.53
6-841	175	10
6-842	255	4
6-844	135	4
6-845	42.5	1.8
6-846	234.2	7
6-848	18.14	1.78
6-849	4.8	0.75
6-850	32	2.5
6-851	61	2
6-852	64.39	1.78
6-853	85	4
6-854	298	2.62
6-855	6.3	1.8
6-856	7.5	1.8
6-857	16	1.8
6-861	5.8	0.75
6-862	180	10
6-863	95	4
6-865	201	4
6-866	9.3	1.5
6-867	89.2	5.7
6-868	195	3.5
6-869	32	2
6-871	260	5
6-872	150	4
6-873	112	4
6-874	95	5
6-875	41.6	2.4
6-876	16.5	1
6-877	22	4
6-878	245	3
6-879	54	4
6-880	2.3	1.3
6-881	37	3
6-882	45	1
6-883	60	1.2
6-884	68	3
6-885	80.5	4
6-887	172	3
6-889	174.3	3.5
6-890	870	8
6-891	16	2.65
6-892	400	5
6-893	52.2	5.7
6-894	27	2.5
6-895	359.2	13.8
6-896	257.2	14
6-897	380	6
6-898	429	6
6-899	70	5
6-900	83	3
6-902	130	5
6-903	110	3

Tel: +45 63 12 83 00 | Email: ps@hymatik.com | www.hymatik.com | Hvidkaervej 27a, DK-5250 Odense SV, Denmark

O-ring dimension

Parker no.	Ø d mm	Cross-section d_2
6-904	13	1.3
6-905	28	1
6-907	6.8	1.8
6-909	449	12
6-910	10	2.62
6-911	165	2
6-912	49.2	3
6-913	27.2	3
6-914	34	3
6-915	110	5
6-916	25	2.5
6-917	296	6
6-918	234.1	8.4
6-919	515.9	6
6-920	195.5	12
6-921	76	3
6-922	7	1.4
6-924	900	10
6-925	2.06	0.66
6-927	380	8
6-928	11.5	1.5
6-929	13.3	2.4
6-930	477	10.5
6-931	10	6.5
6-932	150	2
6-933	6.4	1.3
6-934	401.71	3.53
6-935	307.57	3.53
6-936	272.64	3.53
6-937	7	2.35
6-938	409	6.99
6-939	434	6.99
6-940	15.3	2.2
6-941	68	5
6-942	23.6	2.9
6-943	748.5	7
6-944	46	4
6-945	11.5	2.5
6-946	17	3
6-947	325	5.33
6-948	274	5.33
6-949	223	5.33
6-950	5.5	2
6-951	526	6.99
6-952	9.5	1
6-953	11	3
6-954	214.63	2.18
6-955	5	1.75
6-956	7.1	2
6-957	25.6	1.93
6-958	20	4
6-959	7	1.2
6-960	5.61	1.68
6-961	122	3
6-963	93	4
6-964	50	3
6-965	10.4	1
6-966	2.5	1
6-967	245	10.85
6-968	5.5	1.5
6-969	25	3
6-970	37	1.5
6-971	2.8	1.9
6-972	40.82	2.59
6-973	3.5	0.8
6-974	17	3.5
6-975	44.83	2.67
6-976	10.5	1.5
6-977	28	3
6-978	78	2.5
6-979	72	2.5
6-980	36	1.5
6-981	36	2
6-982	114	3
6-983	164.2	5.7
6-984	2965	7
6-985	56	3
6-986	635	9
6-988	270	5.33
6-990	69	2.5
6-991	86	2.62
6-992	79.3	2.62
6-993	35	3.2
6-994	4	3
6-995	105	4
6-996	43	3
6-997	45	3
6-998	19	3
6-999	23	2
6-1000	29	3
6-1001	75	4
6-1002	78	5
6-1003	120	6
6-1004	172	6
6-1005	114.2	5.7
6-1007	187.1	8.4
6-1008	463	7
6-1010	249.3	5.7
6-1012	84.3	5.7
6-1013	72	4
6-1014	85	3
6-1015	132	4
6-1016	87.2	5.7
6-1017	613.92	6.99
6-1018	289.42	5.87
6-1019	2.35	1
6-1020	46	3
6-1021	16	4

Tel: +45 63 12 83 00 | Email: ps@hymatik.com | www.hymatik.com | Hvidkaervej 27a, DK-5250 Odense SV, Denmark

Parker no.	Ø d mm	Cross-section d_2
6-1022	6.75	1.78
6-1023	40	5
6-1024	53	3.5
6-1025	38	3.5
6-1026	5	1
6-1027	24	3
6-1028	185	5
6-1029	94	4
6-1030	248	5
6-1031	28	5
6-1032	7.7	2
6-1033	2.8	1.6
6-1034	61	4
6-1035	5	2.5
6-1036	4.6	2
6-1037	65	5
6-1038	39	3
6-1039	16.3	2.4
6-1040	18	2.2
6-1041	47	2.5
6-1042	261	6
6-1043	338	6
6-1044	190	4
6-1045	162	2.5
6-1046	145	5
6-1047	34	1
6-1048	218	5.8
6-1049	14	1.1
6-1050	218	6
6-1051	142	4
6-1052	88	4
6-1053	65	4
6-1054	44	3
6-1055	103	5
6-1056	93	5
6-1057	80	4
6-1058	185	3
6-1059	47	4
6-1060	43	4
6-1061	92	4
6-1062	95	4.5
6-1063	220	5
6-1064	22.2	3
6-1065	55	3
6-1066	1960	10.85
6-1067	2072	10
6-1068	175	6
6-1069	77.1	2.62
6-1070	49.2	5.7
6-1071	755	5
6-1072	465	5
6-1073	128	5
6-1074	105	5
6-1075	75	3
6-1076	120	4
6-1077	81	4
6-1078	23	1.5
6-1079	750	5
6-1080	485	5
6-1081	160	5
6-1082	26	3
6-1083	22	3
6-1084	130	4
6-1085	135	5
6-1086	22.3	2.4
6-1087	36.2	3
6-1088	180	4
6-1089	99.2	5.7
6-1090	336	7
6-1091	20	5
6-1092	38	3
6-1093	142	6
6-1094	63	6
6-1095	94	3
6-1096	129	4
6-1097	170	4
6-1098	179.2	5.7
6-1099	15	4
6-1100	35	1.5
6-1101	360	7.5
6-1102	5.69	1.14
6-1103	90	7
6-1104	62	4
6-1105	116.5	1.78
6-1106	108	8
6-1107	152	8
6-1108	180.52	5.33
6-1109	17.2	3
6-1110	180	6
6-1111	88	8
6-1112	23	3
6-1113	90	2.5
6-1114	40	6
6-1115	22	1.3
6-1116	35	3
6-1117	62	6
6-1118	210	4
6-1119	180	8
6-1120	3	2.7
6-1121	185	6
6-1122	9	3
6-1123	64.2	5.7
6-1124	35.15	3.15
6-1125	311	10
6-1126	329	10
6-1127	580.5	3.53
6-1128	460	5.34
6-1129	335	7

Tel: +45 63 12 83 00 | Email: ps@hymatik.com | www.hymatik.com | Hvidkaervej 27a, DK-5250 Odense SV, Denmark

O-ring dimension

Parker no.	Ø d mm	Cross-section d_2
6-1130	840.5	7
6-1131	835.5	7
6-1132	250	8
6-1133	9.52	1.78
6-1134	84	3.5
6-1135	345	5
6-1136	140	5
6-1137	57	4
6-1138	33	3
6-1139	200	5
6-1140	36	3
6-1141	47	2
6-1142	360	4
6-1143	124	4
6-1144	41	1.5
6-1145	56	4
6-1146	31.5	3.15
6-1147	150	6
6-1148	39.4	2.1
6-1149	6.5	1.2
6-1150	34.4	2.1
6-1151	115	2
6-1152	79.2	5.7
6-1153	206	7
6-1154	136	4
6-1155	245	5
6-1156	890	5
6-1157	615	5
6-1158	520	5
6-1159	115	5
6-1160	695	5
6-1161	160	5
6-1162	63	3.5
6-1163	102	4
6-1164	114	5
6-1165	88	6
6-1166	35	4
6-1167	248	7
6-1168	300	6
6-1169	115	5
6-1170	515	5
6-1171	315	5
6-1172	320.62	3.53
6-1173	764	6.99
6-1174	85	6
6-1175	104.5	3
6-1176	46	2
6-1177	172	4
6-1178	45	4
6-1179	90	4
6-1180	120	5
6-1181	80	5
6-1182	112	7
6-1183	7.5	2.1
6-1184	54	2
6-1185	52.5	1.8
6-1186	55	4
6-1187	37	3
6-1188	37	2
6-1189	43	2
6-1190	266	4
6-1191	290	5
6-1192	55	3.5
6-1193	66	3
6-1194	70	4
6-1195	45	4.5
6-1196	48	4
6-1197	34	2
6-1198	13.3	1.2
6-1199	125	4
6-1200	104	5.3
6-1201	260	8
6-1202	13.3	3
6-1203	30	2.15
6-1204	24.69	1.78
6-1205	362	5
6-1206	9.5	2.5
6-1207	142	12
6-1208	10.9	1.2
6-1209	62	3.53
6-1210	320	3
6-1211	228	3
6-1212	70	8
6-1213	1005	15
6-1214	90	5
6-1215	780	7
6-1216	10	1.6
6-1217	131.5	4
6-1218	340	4
6-1219	480	4
6-1220	610	4
6-1221	500	5
6-1222	770	7
6-1223	860	3
6-1224	42	5
6-1225	222	7
6-1226	50	5
6-1227	252	4
6-1228	8.5	2
6-1229	564.3	6.99
6-1230	10.8	1.9
6-1231	260	4
6-1232	26	1.5
6-1233	145	4
6-1234	52	2.5
6-1235	336	5.33
6-1236	11	1
6-1237	100	8

Tel: +45 63 12 83 00 | Email: ps@hymatik.com | www.hymatik.com | Hvidkaervej 27a, DK-5250 Odense SV, Denmark

Parker no.	Ø d mm	Cross-section d_2
6-1238	194	14
6-1239	238	14
6-1240	285	14.1
6-1241	385	14.2
6-1242	415	14.2
6-1243	480	14
6-1244	585	14
6-1245	735	15
6-1246	853	20
6-1247	1.56	1
6-1248	46	5
6-1249	7.3	3.4
6-1250	225	3
6-1251	6.36	0.72
6-1252	21	4
6-1253	49	2
6-1254	368	6
6-1255	343	6
6-1256	440	4
6-1257	37.5	4
6-1258	330	5
6-1259	26	4
6-1260	192	4
6-1261	62	4
6-1262	632	6
6-1263	246	4
6-1264	2.2	1
6-1265	90	4.8
6-1266	7.3	2.4
6-1267	40	5
6-1268	6.3	2.4
6-1269	1.5	0.6
6-1270	80	3
6-1271	56.7	3
6-1272	68	4
6-1273	66	5

Parker no.	Ø d mm	Cross-section d_2
6-1274	54	2
6-1275	11.6	2.2
6-1276	19	1
6-1277	135	3
6-1278	299.5	5
6-1279	273.6	5
6-1280	180	5
6-1281	125	2.5
6-1282	238	10
6-1283	195	5
6-1284	240	8
6-1285	49.2	3.53
6-1286	8.65	2.8
6-1287	4	1.8
6-1288	14	1
6-1289	24.5	3.15
6-1290	170	5
6-1291	4.5	2.25
6-1292	160	6
6-1293	230	8
6-1294	155	3
6-1295	150	5
6-1296	130	3
6-1297	9.5	2
6-1298	17.86	2.62
6-1299	540	5
6-1300	579	5
6-1301	602	5
6-1302	216	4
6-1303	99	3
6-1304	1840	5
6-1305	100	3
6-1306	97	5
6-1307	200	4
6-1308	640	6
6-1309	740	6

Parker no.	Ø d mm	Cross-section d_2
6-1310	300	10
6-1311	21	3
6-1312	6	1.52
6-1313	11.5	2
6-1314	9.5	1.78
6-1315	22	2.1
6-1316	80	3.5
6-1317	53.8	4
6-1318	155	4
6-1319	42	4
6-1320	107	8
6-1321	7.1	3.6
6-1322	116	3
6-1323	11.6	1.2
6-1324	155	5
6-1325	1865	5
6-1326	410	6
6-1327	6	2.5
6-1328	383.6	5
6-1329	134	8
6-1330	12	10.6
6-1331	272	8
6-1332	32	3
6-1333	51.94	3.53
6-1334	340	10
6-1335	412	8
6-1336	167.5	3.5
6-1337	11.1	1.82
6-1338	23.8	2.4
6-1339	13.7	2.5
6-1340	15.5	2.6
6-1341	17.2	1.82
6-1342	14	1.82
6-1343	48.2	3
6-1345	14	1.6
6-1346	240	5

Tel: +45 63 12 83 00 | Email: ps@hymatik.com | www.hymatik.com | Hvidkaervej 27a, DK-5250 Odense SV, Denmark

O-ring dimension

Parker no.	Ø d mm	Cross-section d_2
6-1347	53	2
6-1348	73	7
6-1349	44.3	5.7
6-1350	104.3	5.7
6-1351	309.3	5.7
6-1352	419.3	5.7
6-1353	21	1
6-1354	58	3
6-1356	175	5
6-1357	75	2.5
6-1358	0.9	0.53
6-1359	304.8	3.18
6-1360	236	6
6-1361	12.1	1.6
6-1362	39.2	5.7
6-1363	3.9	2.4
6-1364	17.5	4
6-1365	17	4
6-1366	30	5
6-1367	110	2.5
6-1368	60	4.5
6-1369	76	2
6-1370	300	8
6-1371	310	5
6-1372	65	1.8
6-1373	20	2.65
6-1374	395	12
6-1375	21.2	1.8
6-1376	11.2	1.8
6-1377	65	2.65
6-1378	28.2	1
6-1379	12.5	1.8
6-1380	68	3.5
6-1381	105	3
6-1384	240.66	7.4
6-1385	5.6	1.8
6-1386	11	3.4
6-1387	390	4
6-1388	256	4
6-1389	38	1.5
6-1390	155	3.53
6-1391	192	8
6-1392	354.96	6.09
6-1393	14.7	3.5
6-1394	5.15	1.8
6-1395	100	6
6-1396	15.08	2.62
6-1398	15	3.5
6-1399	42	4.5
6-1400	7	2.75
6-1401	31	2
6-1402	165	4
6-1403	265	5
6-1404	325	5
6-1405	4.05	1.77
6-1406	85	6.99
6-1407	9.5	1.8
6-1408	331.5	6
6-1409	534	8
6-1410	1	0.63
6-1411	33	3.5
6-1412	38	5
6-1413	43	5.5
6-1414	35	5
6-1415	97	4
6-1416	8.1	2
6-1417	77	2.5
6-1418	661	14
6-1419	62	1.5
6-1420	500	6
6-1421	115	6
6-1422	7.65	2
6-1423	29	2.5
6-1424	297	4
6-1425	220	7
6-1426	238	6
6-1427	120	10
6-1428	185	4
6-1429	91	2
6-1430	19.35	1
6-1431	23	4
6-1434	5	1.6
6-1435	440	4.3
6-1436	131	5.3
6-1437	50	3.5
6-1438	54.7	3.53
6-1439	61.7	4.5
6-1440	9.55	1.75
6-1443	675	5.3
6-1444	490	5
6-1445	85	5
6-1446	21.3	2.3
6-1447	27	2.7
6-1448	55	5
6-1449	10	8
6-1450	198	4
6-1451	235	4
6-1452	92	3
6-1453	195	6
6-1454	11.5	2.3
6-1456	24.6	3.4
6-1457	86	4
6-1458	320	6.5
6-1460	10.2	1.5
6-1461	31.57	1.98
6-1462	70	2.5
6-1463	19.5	3.5
6-1464	14.5	3

Tel: +45 63 12 83 00 | Email: ps@hymatik.com | www.hymatik.com | Hvidkaervej 27a, DK-5250 Odense SV, Denmark

Parker no.	Ø d mm	Cross-section d_2
6-1465	20.5	2
6-1466	12	1.3
6-1467	77.5	2.62
6-1468	11.75	1.55
6-1469	12	1.4
6-1470	21	1.5
6-1471	6	1.8
6-1472	82	3
6-1473	128	3
6-1474	30	2.25
6-1475	78	2
6-1476	275	5
6-1477	285	5
6-1478	31	1.5
6-1480	17.7	1.78
6-1481	8.56	1.07
6-1482	39	5
6-1483	47	5.5
6-1484	13	1.58
6-1485	11.8	2.65
6-1486	42	1
6-1487	9.2	2.7
6-1488	5	1.9
6-1489	50.2	3
6-1490	20.5	3
6-1491	10.1	1.6
6-1493	16.5	2
6-1494	15.7	2.5
6-1495	1.45	1.75
6-1496	3.9	1.8
6-1497	40	4
6-1498	11.5	1.8
6-1499	9.6	2
6-1500	7.52	3.51
6-1501	5.46	0.89
6-1502	9.78	1.27
6-1503	12.83	1.27
6-1504	13.59	2.69
6-1505	10.78	2.62
6-1506	1.42	1.58
6-1507	92.2	2.62
6-1508	88.5	6.5
6-1510	11.1	2.15
6-1511	9.5	2.15
6-1512	32	1.5
6-1513	54	1.5
6-1516	11	1.6
6-1517	29.1	1.6
6-1518	10	1.2
6-1519	7.5	1.5
6-1520	44.35	2.58
6-1521	450	2.62
6-1522	255	5
6-1523	7.1	1.37
6-1524	16.3	1.4
6-1525	11.1	1.6
6-1526	13	1.3
6-1528	621	8.5
6-1529	165	5
6-1530	9.1	1.6
6-1531	9.1	1.65
6-1532	3.5	1.35
6-1533	28	4
6-1534	245	7
6-1536	11.3	2.2
6-1537	14.2	1.9
6-1538	7.6	1.9
6-1539	8.55	1.75
6-1540	27.5	2
6-1541	15.5	1.5
6-1543	18.8	1.9
6-1545	24.5	1
6-1546	328	6.99
6-1547	39	2.5
6-1554	70	3.5
6-1555	14	2.2
6-1556	32	1.5
6-1558	7	1.47
6-1559	136	3
6-1560	221	1.78
6-1562	8	1.6
6-1563	198	8
6-1564	240	8
6-1565	205	5
6-1566	12	1.2
6-1567	12.5	1.5
6-1568	3.8	1.9
6-1569	17.3	2.2
6-1570	7.5	3
6-1571	13.5	1.5
6-1573	86.5	4
6-1575	11.5	1.78
6-1576	14	1.3
6-1577	736.6	5
6-1578	31	4
6-1579	16.5	1.5
6-1580	110	1.5
6-1581	6.07	1.3
6-1582	250	10
6-1583	350	10
6-1584	430	16
6-1585	59.2	5.7
6-1586	18	10
6-1587	52	1
6-1588	65	1
6-1589	38	1
6-1590	21.5	1
6-1591	129	1.5

Tel: +45 63 12 83 00 | Email: ps@hymatik.com | www.hymatik.com | Hvidkaervej 27a, DK-5250 Odense SV, Denmark

O-ring dimension

Parker no.	Ø d mm	Cross-section d_2
6-1592	142.9	3.2
6-1593	165.1	3.2
6-1594	152.4	3.2
6-1599	28.3	3.1
6-1600	35.4	3.25
6-1601	42.4	4.25
6-1602	54.4	4.25
6-1605	156	4
6-1607	67	4
6-1608	538	6
6-1609	74.6	3.53
6-1610	17.64	2
6-1611	23.47	2.4
6-1612	164	2
6-1613	27	1.4
6-1614	33	5
6-1615	0.83	1.63
6-1625	154.6	1.78
6-1627	30	1
6-1628	73	2
6-1629	88	5
6-1630	122	6
6-1631	34	2.5
6-1632	145	2.5
6-1633	47	3
6-1634	32.5	3
6-1635	11.8	1.8
6-1636	13	1.8
6-1637	9.55	1.75
6-1638	20.95	2.62
6-1639	351.21	4
6-1640	10	4
6-1641	546	2.62
6-1642	7.6	2.1
6-1643	54	3.15
6-1644	110	3.5
6-1645	3.4	1.5
6-1648	10	1.25
6-1650	35.5	4
6-1651	112	2.5
6-1652	36	5
6-1654	224	6
6-1655	26.5	4
6-1656	9.86	1.78
6-1657	53.5	2
6-1658	14.4	2
6-1659	171.45	3.2
6-1660	115	5.33
6-1661	64	4
6-1662	77.5	2
6-1663	294	3
6-1664	1.33	1.61
6-1665	94	5.7
6-1666	58	3.75
6-1667	278.99	2.62
6-1668	246	3
6-1671	110	6
6-1672	93.4	2.57
6-1673	95	3
6-1674	455	6
6-1675	79.5	2.65
6-1676	24.5	4
6-1677	3.8	1.5
6-1678	571	8
6-1679	223	2.65
6-1680	147.6	2.65
6-1684	50.3	2.5
6-1694	4.3	2.4
6-1695	55	1.2
6-1696	145	2.88
6-1697	71	3.55
6-1698	29	2
6-1699	9.8	1.5
6-1700	17	2.5
6-1701	2.5	1.6
6-1702	160	5.3
6-1703	56.5	5.3
6-1704	69.2	5.3
6-1705	88.4	5.3
6-1706	180	5.3
6-1707	320	3.53
6-1708	98	2.5
6-1709	55	2.5
6-1710	23.3	1.6
6-1711	37.5	1.8
6-1715	83	4
6-1716	635	10
6-1717	12.3	1.9
6-1718	11	1.9
6-1719	22.6	1.78
6-1720	104.2	5.7
6-1721	51.1	1.6
6-1722	21.1	1.6
6-1723	43.7	3.55
6-1724	44.96	2.57
6-1725	208	4
6-1726	60	2
6-1727	230	4.5
6-1728	5.5	0.8
6-1729	28.68	2.4
6-1731	22	1
6-1735	0.7	0.5
6-1740	70.5	3.2
6-1742	690	8
6-1743	5.6	1.9
6-1744	4.8	1.3
6-1745	7.6	2.62
6-1747	15.3	1.5

Tel: +45 63 12 83 00 | Email: ps@hymatik.com | www.hymatik.com | Hvidkaervej 27a, DK-5250 Odense SV, Denmark

Parker no.	Ø d mm	Cross-section d_2
6-1748	16	1.9
6-1749	9.96	1.53
6-1751	6.1	1.6
6-1752	4.3	1.3
6-1753	460	6.99
6-1754	494.16	6.99
6-1765	17	1.93
6-1767	230	4.8
6-1768	24.5	5.5
6-1769	31.5	7
6-1770	15.5	4
6-1771	74.5	3
6-1772	19.5	4
6-1773	153.5	3.2
6-1774	148.6	3.2
6-1775	131.1	3.2
6-1776	86	3.2
6-1777	90.8	3.5
6-1778	70	3.5
6-1779	87.6	3
6-1780	33	1.5
6-1781	95	1.5
6-1782	90	1.5
6-1783	135	1.5
6-1784	329.57	4.8
6-1785	8.73	1.78
6-1786	365	5.3
6-1795	359.53	5.33
6-1797	67.39	2.26
6-1803	151.39	2.57
6-1804	83.77	1.78
6-1805	35.96	2.32
6-1806	20.2	1.81
6-1807	136.53	1.78
6-1808	35.95	1.78
6-1809	14.23	1.6
6-1810	4.32	0.92
6-1813	14.47	3.53
6-1814	2.95	0.97
6-1815	163.07	1.63
6-1816	183	1.78
6-1817	14.2	3
6-1818	21.2	3.6
6-1819	17.2	4
6-1822	13	2.62
6-1823	522	10
6-1824	623.08	5.33
6-1825	13.3	1.8
6-1826	114.55	2.57
6-1827	13.3	2.8
6-1828	14.6	2.1
6-1832	19.84	0.79
6-1833	7.4	2.62
6-1834	11.2	2.62
6-1836	362	4
6-1837	515	5.33
6-1838	532.18	5.33
6-1839	34	4
6-1840	745	10
6-1841	618.5	2
6-1842	367.89	2.66
6-1843	455	5.33
6-1844	595	5.33
6-1845	2324	6.99
6-1846	2350	6.99
6-1847	736	7
6-1848	190	1.78
6-1849	205	1.78
6-1851	425.33	5.33
6-1854	48	1
6-1855	9.7	5.33
6-1856	11.82	2.62
6-1857	14.9	2.7
6-1858	602	7
6-1859	640	7
6-1860	259.2	3.53
6-1861	245	3.53
6-1862	27.5	1
6-1863	6	1.2
6-1864	59.5	5
6-1865	164.33	2.62
6-1866	206	5.7
6-1867	215	5
6-1868	270	6
6-1869	19.5	2.66
6-1873	11.5	3
6-1875	21.5	1.6
6-1876	67	2.8
6-1877	11	2.3
6-1879	8.15	1.83
6-1880	313	5.33
6-1881	340	5.33
6-1883	2	1.5
6-1885	22	2.3
6-1886	7.1	1.84
6-1888	355	8
6-1889	74.9	1.78
6-1890	34	1.1
6-1892	5.96	1.7
6-1893	9.11	2
6-1895	239.2	3.53
6-1896	226.2	3.53
6-1897	45	6
6-1903	43	3.5
6-1904	90	5.5
6-1905	100	5.5
6-1906	30	3.5
6-1907	45	3.5

O-ring dimension

Parker no.	Ø d mm	Cross-section d_2
6-1908	68	5.5
6-1909	72	5.5
6-1910	95	5.5
6-1911	23	2.62
6-1912	40	3.5
6-1913	47	5
6-1914	53	4
6-1915	28	3.5
6-1916	75	4.5
6-1917	70	5.5
6-1918	349	5.33
6-1919	27	2.8
6-1920	32	3.5
6-1922	11.3	4.75
6-1923	14.2	2
6-1924	3.3	1.78
6-1925	4.09	1.78
6-1926	35	3.5
6-1927	65	5.5
6-1928	75	5.5
6-1929	168.4	6
6-1930	23.4	4
6-1931	49.5	5
6-1932	197	6
6-1933	133	3
6-1934	469	5.33
6-1936	13.3	2.2
6-1937	428	5
6-1939	5.7	2.62
6-1942	126.3	5.33
6-1943	818	12
6-1944	777	12
6-1945	224	7
6-1947	334	2.62
6-1948	230	5
6-1949	137.5	3.3

Parker no.	Ø d mm	Cross-section d_2
6-1950	77.8	1.5
6-1951	764	7
6-1952	555	3
6-1953	589	3
6-1956	786	4
6-1957	522	4
6-1958	372	4
6-1959	645	4
6-1960	645	3.53
6-1961	17.3	2.2
6-1962	128	4
6-1963	587	7
6-1964	560	7
6-1966	69	4.5
6-1967	13	1.2
6-1969	1.1	0.25
6-1974	66	1.5
6-1975	19.3	2.2
6-1977	8.5	3
6-1978	11.8	3
6-1979	484	8.4
6-1980	36	4
6-1981	50	1.5
6-1982	3.2	1.78
6-1985	58	2.5
6-1990	125	3.5
6-1991	52.39	3.53
6-1993	250	4
6-1994	16.82	5.33
6-2000	135.5	6
6-2005	276	2.62
6-2008	45.3	1.93
6-2009	855	10
6-2012	74	2.5
6-2013	335	5
6-2015	470	4.5

Parker no.	Ø d mm	Cross-section d_2
6-2016	58	3.55
6-2018	43	5
6-2019	58	3.55
6-2020	38	4
6-2021	148	2.5
6-2022	150	2.5
6-2023	598	7
6-2032	6.4	2.62
6-2033	78	1.5
6-2034	10.24	1.83
6-2036	109.5	5.33
6-2037	297.8	6.99
6-2038	16	3.5
6-2039	22.22	2.62
6-2040	26	3.5
6-2041	4.45	3.53
6-2042	801	4
6-2043	14	5
6-2044	18	3.5
6-2045	63	3
6-2046	130	5.8
6-2047	34.5	2.65
6-2051	212	5.3
6-2052	48	2.3
6-2053	6	2.1
6-2054	36.6	2.9
6-2055	20.8	2
6-2064	121	8
6-2065	510	3
6-2066	820	3
6-2067	750	3
6-2068	17.1	1.6
6-2069	12.3	3.5
6-2070	14.6	2.95
6-2071	11	3.5
6-2073	492	3.53

Tel: +45 63 12 83 00 | Email: ps@hymatik.com | www.hymatik.com | Hvidkaervej 27a, DK-5250 Odense SV, Denmark

Parker no.	Ø d mm	Cross-section d_2
6-2074	48	2.1
6-2075	74.5	4
6-2077	70	7
6-2078	3.5	1
6-2079	68	2.5
6-2080	300	5
6-2081	29.2	5.05
6-2082	22.4	2.5
6-2083	41.5	2
6-2084	188.14	1.78
6-2087	18	1.8
6-2088	42	2
6-2090	45.69	1.78
6-2093	8	2.65
6-2094	15.22	1.78
6-2096	74.9	2
6-2097	3.1	1.2
6-2098	193.7	7
6-2099	1.9	2.8
6-2100	12	5
6-2101	11.56	1.78
6-2102	16.4	1.78
6-2104	74	4.5
6-2105	34	1.5
6-2107	123	3
6-2108	89	1.9
6-2109	312.9	1.78
6-2111	310	2.62
6-2112	14.6	1.5
6-2113	49.88	1.78
6-2114	285	6
6-2117	54	4.5
6-2118	60.4	3
6-2119	42.5	3.53
6-2120	69.6	5
6-2121	104	5

Parker no.	Ø d mm	Cross-section d_2
6-2122	84.5	3
6-2123	4.45	3
6-2124	1020	5.7
6-2125	165.3	1.78
6-2127	7.77	3.77
6-2128	9.75	1.5
6-2129	150	5.3
6-2130	32	1.78
6-2131	169.98	3.56
6-2132	63.1	3.53
6-2133	36	1.78
6-2134	300	4
6-2135	14.1	2.4
6-2137	27.6	2.4
6-2138	3.5	0.9
6-2139	23.8	1.5
6-2140	295	6
6-2143	53	3.55
6-2145	235	6
6-2146	260	6
6-2147	29.2	5
6-2148	29.2	4.95
6-2149	143	1.45
6-2150	22	6

Tel: +45 63 12 83 00 | Email: ps@hymatik.com | www.hymatik.com | Hvidkaervej 27a, DK-5250 Odense SV, Denmark

O-ring sizes acc. to inner diameter d

Parker no.	Ø d mm	Cross-section d_2
6-1735	0.7	0.5
2-001	0.74	1.02
6-408	0.8	1.6
6-1615	0.83	1.63
6-1358	0.9	0.53
6-1410	1	0.63
2-002	1.07	1.27
6-1969	1.1	0.25
2-102	1.24	2.62
6-1664	1.33	1.61
2-003	1.42	1.52
6-1506	1.42	1.58
6-1495	1.45	1.75
6-1269	1.5	0.6
6-369	1.5	1
6-1247	1.56	1
5-051	1.78	1.02
2-004	1.78	1.78
6-714	1.8	1
6-418	1.85	1.5
6-2099	1.9	2.8
6-364	1.98	0.84
6-797	2	1
6-1883	2	1.5
6-925	2.06	0.66
2-103	2.06	2.62
6-1264	2.2	1
6-306	2.2	1.6
6-880	2.3	1.3
6-1019	2.35	1
6-538	2.4	1.9
6-966	2.5	1
6-167	2.5	1.2
6-138	2.5	1.3
6-1701	2.5	1.6
6-168	2.5	1.7
2-005	2.57	1.78
5-578	2.6	1.9
6-020	2.7	1.5
6-1033	2.8	1.6
6-971	2.8	1.9
2-104	2.84	2.62
6-487	2.9	1.02
2-006	2.9	1.78
6-1814	2.95	0.97
6-018	3	1
6-549	3	1.2
6-441	3	1.5
6-615	3	2
6-1120	3	2.7
6-2097	3.1	1.2
5-683	3.1	1.6
6-736	3.17	1.02
6-684	3.2	1.02
6-686	3.2	1.6
6-1982	3.2	1.78
6-1924	3.3	1.78
6-361	3.3	2.4
6-307	3.33	1.02
5-190	3.35	1.78
6-1645	3.4	1.5
5-579	3.4	1.9
6-973	3.5	0.8
6-2138	3.5	0.9
6-2078	3.5	1
6-491	3.5	1.1
6-021	3.5	1.2
6-402	3.5	1.25
6-1532	3.5	1.35
6-468	3.5	1.5
2-105	3.63	2.62
2-007	3.68	1.78
6-251	3.7	1.9
6-1677	3.8	1.5
6-1568	3.8	1.9
6-166	3.9	1.8
6-1363	3.9	2.4
6-613	4	1
6-019	4	1.1
6-035	4	1.5
6-1287	4	1.8
6-104	4	2
6-420	4	2.2
6-428	4	2.5
6-994	4	3
6-1405	4.05	1.77
6-1925	4.09	1.78
5-580	4.2	1.9
6-1752	4.3	1.3
6-1694	4.3	2.4
6-1810	4.32	0.92
2-201	4.34	3.53
2-106	4.42	2.62
6-2123	4.45	3
6-2041	4.45	3.53
5-108	4.47	1.27
2-008	4.47	1.78
6-401	4.5	1
6-214	4.5	1.5
6-1291	4.5	2.25
6-1036	4.6	2
6-133	4.7	1.9
6-849	4.8	0.75
6-1744	4.8	1.3
5-581	4.9	1.9
6-1026	5	1

Tel: +45 63 12 83 00 | Email: ps@hymatik.com | www.hymatik.com | Hvidkaervej 27a, DK-5250 Odense SV, Denmark

Parker no.	Ø d mm	Cross-section d_2
6-583	5	1.2
6-069	5	1.5
6-1434	5	1.6
6-955	5	1.75
6-1488	5	1.9
6-110	5	2
6-1035	5	2.5
6-1394	5.15	1.8
2-107	5.23	2.62
2-009	5.28	1.78
6-751	5.3	2.4
6-738	5.33	1.02
6-063	5.35	1.5
6-1501	5.46	0.89
6-1728	5.5	0.8
6-968	5.5	1.5
6-950	5.5	2
6-1385	5.6	1.8
6-1743	5.6	1.9
6-338	5.6	2.4
6-960	5.61	1.68
6-1102	5.69	1.14
6-748	5.7	1.05
5-582	5.7	1.9
6-1939	5.7	2.62
6-548	5.7	3.2
6-861	5.8	0.75
2-202	5.94	3.53
6-1892	5.96	1.7
6-543	6	1
6-1863	6	1.2
6-713	6	1.25
6-038	6	1.5
6-1312	6	1.52
6-1471	6	1.8
6-001	6	2

Parker no.	Ø d mm	Cross-section d_2
6-2053	6	2.1
6-1327	6	2.5
6-079	6	5
6-652	6	5.2
2-108	6.02	2.62
6-1581	6.07	1.3
3-902	6.07	1.63
2-010	6.07	1.78
6-1751	6.1	1.6
6-344	6.2	1.5
6-374	6.3	1.6
6-855	6.3	1.8
5-686	6.3	2.39
6-1268	6.3	2.4
6-1251	6.36	0.72
6-933	6.4	1.3
5-583	6.4	1.9
6-2032	6.4	2.62
6-1149	6.5	1.2
6-581	6.5	1.5
6-572	6.5	2
6-480	6.6	1.5
6-1022	6.75	1.78
6-907	6.8	1.8
6-440	6.8	2
5-052	6.86	1.78
6-657	7	1
6-959	7	1.2
6-922	7	1.4
6-1558	7	1.47
6-011	7	1.5
6-311	7	2
6-937	7	2.35
6-028	7	2.5
6-1400	7	2.75
6-080	7	3

Parker no.	Ø d mm	Cross-section d_2
6-1523	7.1	1.37
6-052	7.1	1.6
6-1886	7.1	1.84
6-956	7.1	2
6-1321	7.1	3.6
5-584	7.2	1.9
6-1266	7.3	2.4
6-162	7.3	2.7
6-1249	7.3	3.4
6-1833	7.4	2.62
6-710	7.5	1
6-661	7.5	1.25
6-091	7.5	1.5
6-856	7.5	1.8
6-432	7.5	2
6-1183	7.5	2.1
6-134	7.5	2.5
6-1570	7.5	3
6-1500	7.52	3.51
2-203	7.52	3.53
2-109	7.59	2.62
6-1538	7.6	1.9
6-1642	7.6	2.1
6-1745	7.6	2.62
3-903	7.65	1.63
2-011	7.65	1.78
6-1422	7.65	2
6-1032	7.7	2
5-673	7.75	1.88
6-2127	7.77	3.77
6-317	7.8	3.6
6-486	7.8	4.6
6-437	8	1
6-592	8	1.25
6-074	8	1.5
6-1562	8	1.6

Tel: +45 63 12 83 00 | Email: ps@hymatik.com | www.hymatik.com | Hvidkaervej 27a, DK-5250 Odense SV, Denmark

O-ring dimension

Parker no.	Ø d mm	Cross-section d_2
5-585	8	1.88
6-002	8	2
6-520	8	2.2
6-564	8	2.5
6-2093	8	2.65
6-390	8	3
6-192	8.1	1.6
6-1416	8.1	2
5-664	8.13	1.78
6-1879	8.15	1.83
6-345	8.2	1.5
6-070	8.3	2.4
6-692	8.5	1.5
6-1228	8.5	2
6-1977	8.5	3
6-1539	8.55	1.75
6-1481	8.56	1.07
6-1286	8.65	2.8
6-1785	8.73	1.78
5-612	8.74	1.78
6-277	8.79	1.14
6-715	8.8	1
5-586	8.9	1.9
5-587	8.9	2.7
3-904	8.92	1.83
6-610	9	1.2
6-010	9	1.5
6-120	9	1.8
6-470	9	2
6-161	9	2.5
6-1122	9	3
6-651	9	4
6-1530	9.1	1.6
6-1531	9.1	1.65
6-1893	9.11	2
2-204	9.12	3.53

Parker no.	Ø d mm	Cross-section d_2
2-110	9.19	2.62
5-716	9.19	3
6-1487	9.2	2.7
2-012	9.25	1.78
6-866	9.3	1.5
6-012	9.3	2.4
6-395	9.35	1.6
6-346	9.4	2.1
6-952	9.5	1
6-1314	9.5	1.78
6-1407	9.5	1.8
6-1297	9.5	2
6-1511	9.5	2.15
6-1206	9.5	2.5
6-1133	9.52	1.78
6-373	9.53	1.6
6-1637	9.55	1.75
6-1499	9.6	2
5-212	9.75	1.78
6-1855	9.7	5.33
6-2128	9.75	1.5
6-1502	9.78	1.27
6-1699	9.8	1.5
6-1656	9.86	1.78
5-614	9.93	2.62
6-1749	9.96	1.53
6-116	10	1
6-1518	10	1.2
6-1648	10	1.25
6-083	10	1.5
6-1216	10	1.6
6-003	10	2
6-532	10	2.2
6-105	10	2.5
6-910	10	2.62
6-823	10	2.65

Parker no.	Ø d mm	Cross-section d_2
6-605	10	3
6-1640	10	4
6-931	10	6.5
6-1449	10	8
6-627	10.1	1
6-1491	10.1	1.6
6-839	10.1	1.78
6-571	10.15	1.4
6-1460	10.2	1.5
6-2034	10.24	1.83
6-375	10.25	1.4
6-475	10.3	2.4
6-965	10.4	1
2-309	10.46	5.33
6-976	10.5	1.5
5-588	10.5	2.7
3-905	10.52	1.83
6-777	10.6	1.8
6-218	10.6	2
2-205	10.69	3.53
2-111	10.77	2.62
6-1505	10.78	2.62
6-551	10.8	1.5
6-1230	10.8	1.9
2-013	10.82	1.78
6-1208	10.9	1.2
6-1236	11	1
6-084	11	1.5
6-1516	11	1.6
6-1718	11	1.9
6-086	11	2
6-1877	11	2.3
6-717	11	2.5
6-953	11	3
6-1386	11	3.4
6-2071	11	3.5

Tel: +45 63 12 83 00 | Email: ps@hymatik.com | www.hymatik.com | Hvidkaervej 27a, DK-5250 Odense SV, Denmark

Parker no.	Ø d mm	Cross-section d_2
6-1525	11.1	1.6
5-613	11.1	1.78
6-1337	11.1	1.82
6-1510	11.1	2.15
6-1376	11.2	1.8
6-1834	11.2	2.62
6-1536	11.3	2.2
6-471	11.3	2.4
6-1922	11.3	4.75
6-347	11.4	2.1
6-677	11.5	1
6-928	11.5	1.5
6-1575	11.5	1.78
6-1498	11.5	1.8
6-1313	11.5	2
6-1454	11.5	2.3
6-945	11.5	2.5
6-1873	11.5	3
6-2101	11.56	1.78
6-1323	11.6	1.2
6-1275	11.6	2.2
6-1468	11.75	1.55
6-1635	11.8	1.8
6-1485	11.8	2.65
6-1978	11.8	3
6-1856	11.82	2.62
6-366	11.89	1.78
3-906	11.89	1.98
5-615	11.91	2.62
6-438	12	1
6-1566	12	1.2
6-1466	12	1.3
6-1469	12	1.4
6-053	12	1.5
6-065	12	2
6-774	12	2.5
6-124	12	3
6-662	12	3.8
6-2100	12	5
6-1330	12	10.6
2-310	12.07	5.33
6-1361	12.1	1.6
5-589	12.1	2.7
2-206	12.29	3.53
6-1717	12.3	1.9
6-058	12.3	2.4
6-2069	12.3	3.5
2-112	12.37	2.62
2-014	12.42	1.78
6-550	12.5	1.1
6-1567	12.5	1.5
6-1379	12.5	1.8
6-198	12.5	2
6-1503	12.83	1.27
6-584	13	1
6-904	13	1.3
6-033	13	1.5
6-1484	13	1.58
6-1636	13	1.8
6-075	13	2
6-016	13	2.5
6-1967	13	1.2
6-1822	13	2.62
6-730	13	3
6-207	13	3.5
6-163	13.1	1.6
5-616	13.11	2.62
6-129	13.23	1.78
6-1198	13.3	1.2
6-1825	13.3	1.8
6-1936	13.3	2.2
6-929	13.3	2.4
6-1827	13.3	2.8
6-1202	13.3	3
6-348	13.4	2.1
3-907	13.46	2.08
6-1571	13.5	1.5
6-096	13.5	2.75
5-590	13.59	2.69
6-473	13.6	2.5
2-311	13.64	5.33
6-1339	13.7	2.5
6-160	13.75	2.8
2-207	13.87	3.53
6-737	13.89	1.3
2-113	13.94	2.62
6-1288	14	1
6-1049	14	1.1
6-1576	14	1.3
6-143	14	1.5
6-1345	14	1.6
2-015	14	1.78
6-1342	14	1.82
6-090	14	2
6-1555	14	2.2
6-067	14	2.5
6-705	14	3
6-2043	14	5
6-2135	14.1	2.4
6-1537	14.2	1.9
6-1923	14.2	2
6-1817	14.2	3
6-1809	14.23	1.6
6-135	14.3	2.4
6-1658	14.4	2
5-239	14.48	2.69
6-1813	14.47	3.53
6-397	14.5	1.6

O-ring dimension

Parker no.	Ø d mm	Cross-section d_2
6-1464	14.5	3
6-2112	14.6	1.5
6-1828	14.6	2.1
6-340	14.6	2.4
6-2070	14.6	2.95
6-1393	14.7	3.5
6-1857	14.9	2.7
6-683	15	1
6-118	15	1.5
6-040	15	1.6
6-085	15	1.8
6-005	15	2
6-106	15	2.5
6-043	15	3
6-072	15	3.2
6-1398	15	3.5
6-1099	15	4
6-128	15	5
6-1396	15.08	2.62
5-591	15.1	2.7
6-2094	15.22	1.78
2-312	15.24	5.33
6-1747	15.3	1.5
6-940	15.3	2.2
6-206	15.3	2.4
5-243	15.34	2.62
6-349	15.4	2.1
2-208	15.47	3.53
5-676	15.49	1.47
6-1541	15.5	1.5
6-1340	15.5	2.6
6-1770	15.5	4
2-114	15.54	2.62
2-016	15.6	1.78
6-1494	15.7	2.5
6-223	15.8	2.4

Parker no.	Ø d mm	Cross-section d_2
5-617	15.88	2.62
6-439	16	1
6-632	16	1.25
6-528	16	1.5
6-857	16	1.8
6-1748	16	1.9
6-146	16	2
6-562	16	2.5
6-891	16	2.65
6-042	16	3
6-2038	16	3.5
6-1021	16	4
6-1524	16.3	1.4
6-1039	16.3	2.4
3-908	16.36	2.21
6-2102	16.4	1.78
6-876	16.5	1
6-1579	16.5	1.5
6-1493	16.5	2
6-313	16.5	2.7
5-643	16.51	1.14
6-725	16.56	1.78
6-297	16.58	1.5
6-006	16.7	1.45
2-313	16.81	5.33
6-1994	16.82	5.33
5-592	16.9	2.7
6-524	17	1.1
6-476	17	1.5
6-1765	17	1.93
6-044	17	2
6-1700	17	2.5
6-946	17	3
6-974	17	3.5
6-1365	17	4
2-209	17.04	3.53

Parker no.	Ø d mm	Cross-section d_2
6-2068	17.1	1.6
2-115	17.12	2.62
2-017	17.17	1.78
6-1341	17.2	1.82
6-1109	17.2	3
6-1819	17.2	4
6-1961	17.3	2.2
5-690	17.3	2.4
6-554	17.4	2.1
6-388	17.4	2.5
6-1364	17.5	4
6-1610	17.64	2
6-1480	17.7	1.78
6-367	17.81	1.02
6-1298	17.86	2.62
6-041	17.9	1.25
5-256	17.96	2.62
6-731	18	1.3
6-087	18	1.5
6-2087	18	1.8
6-076	18	2
6-1040	18	2.2
6-132	18	2.5
6-425	18	3
6-007	18	3.15
6-2044	18	3.5
6-125	18	4
6-755	18	5
6-1586	18	10
6-848	18.14	1.78
6-396	18.2	3
6-177	18.3	2.4
5-594	18.3	3.6
5-593	18.4	2.7
2-314	18.42	5.33
6-308	18.5	1.5

Tel: +45 63 12 83 00 | Email: ps@hymatik.com | www.hymatik.com | Hvidkaervej 27a, DK-5250 Odense SV, Denmark

Parker no.	Ø d mm	Cross-section d_2
6-499	18.6	2
6-557	18.6	3.5
2-210	18.64	3.53
2-116	18.72	2.62
2-018	18.77	1.78
6-1543	18.8	1.9
6-295	19	0.8
6-1276	19	1
6-573	19	1.5
6-798	19	1.8
6-360	19	2
6-039	19	2.5
6-779	19	2.65
6-998	19	3
6-404	19	5
3-910	19.18	2.46
6-593	19.2	3
6-1975	19.3	2.2
6-503	19.3	2.4
6-628	19.3	3.65
6-1430	19.35	1
6-350	19.4	2.1
6-119	19.5	1.5
6-1869	19.5	2.66
6-1463	19.5	3.5
6-1772	19.5	4
6-758	19.75	2.5
6-300	19.8	2.4
5-595	19.8	3.6
6-1832	19.84	0.79
2-315	19.99	5.33
6-099	20	1.3
6-078	20	1.5
6-793	20	1.8
6-619	20	2
6-017	20	2.5

Parker no.	Ø d mm	Cross-section d_2
6-1373	20	2.65
6-130	20	3
6-808	20	3.55
6-958	20	4
6-1091	20	5
6-1806	20.2	1.81
6-382	20.2	3
2-211	20.22	3.53
2-117	20.29	2.62
6-275	20.3	2.4
6-212	20.34	4.25
2-019	20.35	1.78
6-1465	20.5	2
6-1490	20.5	3
6-2055	20.8	2
6-1638	20.95	2.62
6-1353	21	1
6-1470	21	1.5
6-008	21	2
6-1311	21	3
6-089	21	3.5
6-1252	21	4
6-489	21	6
6-1722	21.1	1.6
6-1375	21.2	1.8
6-430	21.2	2.4
6-780	21.2	2.65
6-801	21.2	3.55
6-1818	21.2	3.6
6-1446	21.3	2.3
5-596	21.3	3.6
6-1590	21.5	1
6-687	21.5	1.5
6-1875	21.5	1.6
6-343	21.5	1.78
2-316	21.59	5.33

Parker no.	Ø d mm	Cross-section d_2
6-285	21.7	0.73
6-286	21.82	1
2-212	21.82	3.53
2-118	21.89	2.62
3-911	21.92	2.95
2-020	21.95	1.78
6-1731	22	1
6-1115	22	1.3
6-493	22	1.39
6-088	22	1.5
6-139	22	2
6-1315	22	2.1
6-1885	22	2.3
6-036	22	2.5
6-1083	22	3
6-877	22	4
6-2150	22	6
6-356	22.1	1.6
6-1064	22.2	3
6-2039	22.22	2.62
6-1086	22.3	2.4
6-2082	22.4	2.5
6-1719	22.6	1.78
6-263	22.7	1.5
6-287	22.89	1
6-1078	23	1.5
6-999	23	2
6-066	23	2.5
6-1911	23	2.62
6-1112	23	3
5-597	23	3.6
6-1431	23	4
2-317	23.16	5.33
6-1710	23.3	1.6
2-213	23.39	3.53
6-1930	23.4	4

O-ring dimension

Parker no.	Ø d mm	Cross-section d_2
6-1611	23.47	2.4
2-119	23.47	2.62
3-912	23.47	2.95
2-021	23.52	1.78
6-298	23.6	1.02
6-942	23.6	2.9
6-351	23.7	2.8
6-2139	23.8	1.5
6-1338	23.8	2.4
6-666	24	1
6-544	24	1.5
6-022	24	2
6-595	24	2.5
6-1027	24	3
6-453	24	4
6-443	24	6
6-050	24.2	3
6-288	24.32	1
6-1545	24.5	1
6-1289	24.5	3.15
6-1676	24.5	4
6-1768	24.5	5.5
6-1456	24.6	3.4
5-598	24.6	3.6
6-1204	24.69	1.78
2-318	24.77	5.33
6-092	24.8	1.5
2-214	24.99	3.53
6-611	25	1.5
6-442	25	2
6-916	25	2.5
6-969	25	3
6-426	25	4
6-376	25	5
3-913	25.04	2.95
2-120	25.07	2.62

Parker no.	Ø d mm	Cross-section d_2
2-022	25.12	1.78
6-126	25.3	1.6
6-745	25.3	2.4
6-189	25.5	2
6-957	25.6	1.93
6-289	25.79	1
6-387	25.8	3.3
5-618	25.81	3.53
6-728	26	1
6-1232	26	1.5
6-656	26	2
6-749	26	2.5
6-1082	26	3
6-2040	26	3.5
6-1259	26	4
5-599	26.2	3.6
2-319	26.34	5.33
6-1655	26.5	4
2-215	26.57	3.53
3-914	26.59	2.95
2-121	26.64	2.62
2-023	26.7	1.78
6-208	26.7	2.5
6-1613	27	1.4
6-400	27	1.5
6-049	27	2
6-894	27	2.5
6-1447	27	2.7
6-1919	27	2.8
6-147	27	3
6-825	27	3.2
6-660	27	5
6-913	27.2	3
6-023	27.3	2.4
6-1862	27.5	1
6-497	27.5	1.5

Parker no.	Ø d mm	Cross-section d_2
6-1540	27.5	2
6-2137	27.6	2.4
6-296	27.71	1.02
5-600	27.8	3.6
2-320	27.94	5.33
6-905	28	1
6-101	28	1.5
6-794	28	1.8
6-140	28	2
6-180	28	2.2
6-654	28	2.5
6-781	28	2.65
6-977	28	3
6-1915	28	3.5
6-1533	28	4
6-1031	28	5
2-216	28.17	3.53
6-1378	28.2	1
2-122	28.24	2.62
2-024	28.3	1.78
6-1599	28.3	3.1
6-1729	28.68	2.4
6-1698	29	2
6-1423	29	2.5
6-1000	29	3
6-1517	29.1	1.6
6-2148	29.2	4.95
6-2147	29.2	5
6-2081	29.2	5.05
5-601	29.3	3.6
6-034	29.5	1.5
2-321	29.51	5.33
6-352	29.7	2.8
3-916	29.74	2.95
2-217	29.74	3.53
2-123	29.82	2.62

Tel: +45 63 12 83 00 | Email: ps@hymatik.com | www.hymatik.com | Hvidkaervej 27a, DK-5250 Odense SV, Denmark

Parker no.	Ø d mm	Cross-section d_2
2-025	29.87	1.78
6-1627	30	1
6-048	30	2
6-1203	30	2.15
6-1474	30	2.25
6-156	30	2.5
6-056	30	3
6-037	30	3.15
6-1906	30	3.5
6-803	30	3.55
6-454	30	4
6-663	30	4.65
6-1366	30	5
6-290	30.3	2.4
6-142	30.7	2
5-602	30.8	3.6
6-1478	31	1.5
6-1401	31	2
6-324	31	2.5
6-1578	31	4
6-097	31	4.5
6-314	31.02	3
2-322	31.12	5.33
2-218	31.34	3.53
2-124	31.42	2.62
2-026	31.47	1.78
6-1146	31.5	3.15
6-1769	31.5	7
6-1461	31.57	1.98
6-766	31.7	3.5
6-760	31.95	2.6
6-1556	32	1.5
6-2130	32	1.78
6-869	32	2
6-850	32	2.5
6-646	32	2.7
6-1332	32	3
6-1920	32	3.5
6-838	32	4
6-1634	32.5	3
6-784	32.5	3.55
5-603	32.5	3.6
2-323	32.69	5.33
2-219	32.92	3.53
2-125	32.99	2.62
6-1780	33	1.5
6-136	33	2
6-540	33	2.5
6-1138	33	3
6-1411	33	3.5
6-1614	33	5
2-027	33.05	1.78
6-472	33.3	2.4
6-802	33.5	2.65
5-157	33.99	2.34
6-1047	34	1
6-1890	34	1.1
6-2105	34	1.5
6-1197	34	2
6-1631	34	2.5
6-622	34	2.8
6-914	34	3
6-1839	34	4
5-604	34.1	3.6
2-324	34.29	5.33
6-1150	34.4	2.1
6-585	34.4	3.1
3-918	34.42	2.95
6-2047	34.5	2.65
2-220	34.52	3.53
2-126	34.59	2.62
2-028	34.65	1.78
6-752	34.65	2.6
6-1100	35	1.5
6-047	35	2
6-606	35	2.5
6-1116	35	3
6-993	35	3.2
6-1926	35	3.5
6-1166	35	4
6-545	35	4.5
6-1414	35	5
6-377	35	5.3
6-1124	35.15	3.15
6-1600	35.4	3.25
6-1650	35.5	4
5-605	35.6	3.6
6-1808	35.95	1.78
6-1805	35.96	2.32
6-980	36	1.5
6-2133	36	1.78
6-678	36	2
6-694	36	2.1
6-609	36	2.2
6-329	36	2.5
6-1140	36	3
6-1980	36	4
6-1652	36	5
2-221	36.09	3.53
2-127	36.17	2.62
6-1087	36.2	3
6-154	36.3	1.78
5-670	36.5	1.78
6-2054	36.6	2.9
6-970	37	1.5
6-1188	37	2
6-291	37	2.5
6-881	37	3

Tel: +45 63 12 83 00 | Email: ps@hymatik.com | www.hymatik.com | Hvidkaervej 27a, DK-5250 Odense SV, Denmark

O-ring dimension

Parker no.	Ø d mm	Cross-section d_2	Parker no.	Ø d mm	Cross-section d_2	Parker no.	Ø d mm	Cross-section d_2
6-555	37	5	6-1497	40	4	6-1413	43	5.5
5-606	37.3	3.6	6-1023	40	5	6-759	43.25	2.6
6-459	37.36	2.6	6-1114	40	6	6-809	43.7	1.8
3-920	37.47	3	6-102	40.6	4	6-1723	43.7	3.55
2-325	37.47	5.33	**2-326**	40.64	5.33	**2-327**	43.82	5.33
6-1711	37.5	1.8	6-972	40.82	2.59	6-431	44	2
6-1257	37.5	4	**2-223**	40.87	3.53	6-1054	44	3
2-222	37.69	3.53	**2-130**	40.94	2.62	**2-224**	44.04	3.53
2-128	37.77	2.62	6-1144	41	1.5	**2-132**	44.12	2.62
2-029	37.82	1.78	**2-030**	41	1.78	**2-031**	44.17	1.78
6-1589	38	1	6-541	41	2.5	6-542	44.2	2.5
6-1389	38	1.5	6-449	41	3	6-1349	44.3	5.7
6-046	38	2	6-525	41.28	3.53	6-1520	44.35	2.58
6-433	38	2.5	6-337	41.4	2.62	6-193	44.35	3
6-1092	38	3	6-2083	41.5	2	6-772	44.7	3.5
6-1025	38	3.5	6-875	41.6	2.4	6-975	44.83	2.67
6-2020	38	4	6-414	41.75	2.6	6-1724	44.96	2.57
6-221	38	5	6-1486	42	1	6-882	45	1
6-782	38.7	2.65	6-015	42	1.5	6-082	45	1.5
6-353	38.7	2.8	6-2088	42	2	6-054	45	2
6-575	39	2	6-594	42	2.5	6-323	45	2.5
6-1547	39	2.5	6-227	42	3	6-783	45	2.65
6-1038	39	3	6-1319	42	4	6-997	45	3
6-1482	39	5	6-1399	42	4.5	6-1907	45	3.5
6-205	39.2	3	6-1224	42	5	6-1178	45	4
6-1362	39.2	5.7	6-1601	42.4	4.25	6-1195	45	4.5
2-129	39.34	2.62	6-845	42.5	1.8	6-726	45	5
6-1148	39.4	2.1	6-2119	42.5	3.53	6-1897	45	6
6-586	39.4	3.1	**2-131**	42.52	2.62	6-2008	45.3	1.93
6-753	39.5	2.6	5-330	42.52	5.33	5-035	45.36	3.53
5-321	39.6	3.53	5-332	42.85	3.53	6-2090	45.69	1.78
6-642	40	1.5	6-1189	43	2	**2-133**	45.69	2.62
6-027	40	2	6-996	43	3	6-750	45.9	1.5
6-566	40	2.5	6-1903	43	3.5	6-1176	46	2
6-292	40	3	6-1060	43	4	6-1020	46	3
6-1912	40	3.5	6-2018	43	5	6-944	46	4

Tel: +45 63 12 83 00 | Email: ps@hymatik.com | www.hymatik.com | Hvidkaervej 27a, DK-5250 Odense SV, Denmark

Parker no.	Ø d mm	Cross-section d_2
6-1248	46	5
6-159	46.02	3.53
6-354	46.7	2.8
6-423	46.87	2.62
2-328	46.99	5.33
6-1141	47	2
6-1041	47	2.5
6-1633	47	3
6-1059	47	4
6-1913	47	5
6-1483	47	5.5
6-293	47.2	5.7
2-225	47.22	3.53
2-134	47.29	2.62
2-032	47.35	1.78
6-009	47.5	4
6-1854	48	1
6-370	48	2
6-2074	48	2.1
6-2052	48	2.3
6-155	48	3
6-1196	48	4
6-673	48.2	1.78
6-1343	48.2	3
6-435	48.4	4.85
2-135	48.9	2.62
6-1253	49	2
6-912	49.2	3
5-701	49.2	3.53
6-1070	49.2	5.7
6-194	49.5	3
6-1931	49.5	5
6-2113	49.88	1.78
6-1981	50	1.5
6-051	50	2
6-055	50	2.5

Parker no.	Ø d mm	Cross-section d_2
6-964	50	3
6-1437	50	3.5
6-603	50	4
6-791	50	4.5
6-1226	50	5
2-329	50.17	5.33
6-1489	50.2	3
6-1684	50.3	2.5
2-226	50.39	3.53
2-136	50.47	2.62
2-033	50.52	1.78
6-630	51	3
6-1721	51.1	1.6
6-434	51.5	1.5
5-037	51.71	3.53
6-1333	51.94	3.53
6-1587	52	1
6-1234	52	2.5
6-556	52	3
2-137	52.07	2.62
6-893	52.2	5.7
6-1991	52.39	3.53
6-1185	52.5	1.8
6-1347	53	2
6-1024	53	3.5
6-2143	53	3.55
6-1914	53	4
6-113	53	5
6-112	53	6.5
3-928	53.09	3
2-330	53.34	5.33
6-1657	53.5	2
2-227	53.57	3.53
2-138	53.64	2.62
2-034	53.7	1.78
6-1317	53.8	4

Parker no.	Ø d mm	Cross-section d_2
6-1513	54	1.5
6-1274	54	2
6-819	54	3
6-1643	54	3.15
6-879	54	4
6-2117	54	4.5
6-1602	54.4	4.25
6-810	54.5	2.65
6-1438	54.7	3.53
6-1695	55	1.2
6-141	55	2
6-1709	55	2.5
6-1065	55	3
6-1192	55	3.5
6-1186	55	4
6-1448	55	5
2-139	55.25	2.62
6-703	55.3	2
6-568	56	2
6-985	56	3
6-785	56	3.55
6-1145	56	4
6-739	56	4.5
6-1703	56.5	5.3
2-331	56.52	5.33
6-1271	56.7	3
2-228	56.74	3.53
2-140	56.82	2.62
2-035	56.87	1.78
6-643	57	1.5
6-719	57	2.5
6-427	57	3
6-1137	57	4
6-447	58	2
6-1985	58	2.5
6-1354	58	3

Tel: +45 63 12 83 00 | Email: ps@hymatik.com | www.hymatik.com | Hvidkaervej 27a, DK-5250 Odense SV, Denmark

O-ring dimension

Parker no.	Ø d mm	Cross-section d_2
6-2019	58	3.55
6-1666	58	3.75
6-109	58	4
2-141	58.42	2.62
5-702	58.74	3.53
6-1585	59.2	5.7
3-932	59.36	3
6-1864	59.5	5
6-764	59.6	5.85
2-332	59.69	5.33
6-560	59.7	7
2-229	59.92	3.53
2-142	59.99	2.62
6-883	60	1.2
6-1726	60	2
6-411	60	2.5
6-665	60	3
6-107	60	4.1
6-1368	60	4.5
6-114	60	5
2-036	60.05	1.78
6-2118	60.4	3
6-851	61	2
6-1034	61	4
6-633	61	4.5
6-792	61	5
2-143	61.6	2.62
6-1439	61.7	4.5
6-1419	62	1.5
6-455	62	2.5
6-699	62	3
6-1209	62	3.53
6-1261	62	4
6-1117	62	6
2-333	62.87	5.33
6-242	63	2.5
6-2045	63	3
6-1162	63	3.5
6-151	63	4
6-474	63	4.5
6-1094	63	6
2-230	63.09	3.53
6-2132	63.1	3.53
2-144	63.17	2.62
2-037	63.22	1.78
6-636	64	3
6-1661	64	4
6-1123	64.2	5.7
5-805	64.39	1.78
2-145	64.77	2.62
6-1588	65	1
6-1372	65	1.8
6-501	65	2
6-1377	65	2.65
6-523	65	3
6-1053	65	4
6-596	65	4.5
6-1037	65	5
6-416	65	5.3
6-1927	65	5.5
5-703	65.09	3.53
6-1974	66	1.5
6-500	66	2
6-1193	66	3
6-1273	66	5
2-334	66.04	5.33
2-231	66.27	3.53
2-146	66.34	2.62
2-038	66.4	1.78
6-243	67	1.5
6-316	67	2.5
6-1876	67	2.8
6-659	67	3
6-786	67	3.55
6-1607	67	4
6-1797	67.39	2.26
5-361	67.84	3.53
2-147	67.95	2.62
6-2079	68	2.5
6-884	68	3
6-1380	68	3.5
6-1272	68	4
6-941	68	5
6-1908	68	5.5
6-990	69	2.5
6-824	69	3
6-1966	69	4.5
6-1704	69.2	5.3
2-335	69.22	5.33
6-272	69.24	3.4
2-232	69.44	3.53
2-148	69.52	2.62
2-039	69.57	1.78
6-2120	69.6	5
6-0641	70	1.5
6-552	70	2
6-1462	70	2.5
6-031	70	3
6-1778	70	3.5
6-1194	70	4
6-539	70	4.5
6-899	70	5
6-1917	70	5.5
6-2077	70	7
6-1212	70	8
6-1740	70.5	3.2
6-787	71	3.55
6-634	71	4.5

Tel: +45 63 12 83 00 | Email: ps@hymatik.com | www.hymatik.com | Hvidkaervej 27a, DK-5250 Odense SV, Denmark

Parker no.	Ø d mm	Cross-section d_2
2-149	71.12	2.62
5-704	71.44	3.53
6-979	72	2.5
6-045	72	3
6-1013	72	4
6-1909	72	5.5
2-336	72.39	5.33
2-233	72.62	3.53
2-150	72.69	2.62
2-040	72.75	1.78
6-1628	73	2
6-030	73	3
6-757	73	4
6-1348	73	7
6-178	74	2
6-2012	74	2.5
6-483	74	3
6-2104	74	4.5
6-294	74.2	5.7
6-587	74.4	3.1
6-1771	74.5	3
6-2075	74.5	4
6-1609	74.6	3.53
5-705	74.61	3.53
6-1889	74.9	1.78
6-2096	74.9	2
6-1357	75	2.5
6-1075	75	3
6-1001	75	4
6-1916	75	4.5
6-1928	75	5.5
2-337	75.57	5.33
2-234	75.79	3.53
2-151	75.87	2.62
2-041	75.92	1.78
6-1369	76	2
6-754	76	2.5
6-921	76	3
6-464	76	4.5
6-805	77	2
6-1417	77	2.5
6-1069	77.1	2.62
6-1662	77.5	2
6-1467	77.5	2.62
6-1950	77.8	1.5
6-2033	78	1.5
6-1475	78	2
6-978	78	2.5
6-729	78	3
6-826	78	3.5
6-1002	78	5
2-338	78.74	5.33
2-235	78.97	3.53
6-820	79	1.5
6-1152	79.2	5.7
6-992	79.3	2.62
6-1675	79.5	2.65
6-195	79.5	3
6-108	79.6	3.2
6-790	80	1.8
6-569	80	2
6-1270	80	3
6-1316	80	3.5
6-788	80	3.55
6-1057	80	4
6-1181	80	5
5-816	80.31	1.78
6-885	80.5	4
6-121	81	3
6-1077	81	4
2-339	81.92	5.33
6-513	82	2
6-1472	82	3
6-445	82	4
2-236	82.14	3.53
2-152	82.22	2.62
2-042	82.27	1.78
6-821	83	1
6-900	83	3
6-1715	83	4
6-1804	83.77	1.78
6-184	83.8	2.62
6-676	84	2.5
6-456	84	3
6-1134	84	3.5
6-1012	84.3	5.7
6-588	84.4	3.1
6-2122	84.5	3
6-822	85	1.5
6-733	85	2
6-1014	85	3
6-853	85	4
6-1445	85	5
6-1174	85	6
6-1406	85	6.99
2-340	85.09	5.33
6-452	85.2	9.25
2-237	85.32	3.53
6-991	86	2.62
6-1776	86	3.2
6-1457	86	4
6-1573	86.5	4
6-574	86.84	5.33
6-579	87	3
6-558	87.2	2.5
6-1016	87.2	5.7
6-309	87.3	2
6-1779	87.6	3

Tel: +45 63 12 83 00 | Email: ps@hymatik.com | www.hymatik.com | Hvidkaervej 27a, DK-5250 Odense SV, Denmark

O-ring dimension

Parker no.	Ø d mm	Cross-section d_2
6-276	88	3
6-1052	88	4
6-1629	88	5
6-1165	88	6
6-1111	88	8
2-341	88.27	5.33
5-381	88.27	6.99
6-561	88.3	7
6-1705	88.4	5.3
2-238	88.49	3.53
6-1508	88.5	6.5
2-153	88.57	2.62
2-043	88.62	1.78
6-2030	89	1.5
6-2108	89	1.9
6-867	89.2	5.7
6-013	89.5	3
6-1782	90	1.5
6-498	90	2
6-1113	90	2.5
6-216	90	3
6-1179	90	4
6-1265	90	4.8
6-1214	90	5
6-1904	90	5.5
6-1103	90	7
6-1777	90.8	3.5
6-1429	91	2
6-100	91	3
2-342	91.44	5.33
2-239	91.67	3.53
6-1452	92	3
6-1061	92	4
6-1507	92.2	2.62
6-804	92.5	3.55
6-720	93	2
6-743	93	3
6-963	93	4
6-1056	93	5
6-257	93.39	1.47
6-1672	93.4	2.57
6-405	93.5	9.5
6-446	94	2
6-1095	94	3
6-1029	94	4
6-1665	94	5.7
6-608	94.2	5.7
6-339	94.5	3
2-343	94.62	5.33
2-240	94.84	3.53
2-154	94.92	2.62
2-044	94.97	1.78
6-1781	95	1.5
6-1673	95	3
6-863	95	4
6-1062	95	4.5
6-874	95	5
6-1910	95	5.5
6-582	95.5	3.53
6-700	96	2
6-832	96	9
6-640	97	1.5
6-1415	97	4
6-1306	97	5
2-344	97.79	5.33
6-1708	98	2.5
6-157	98	3
2-241	98.02	3.53
6-1303	99	3
6-392	99	6.99
6-1089	99.2	5.7
6-601	100	2
6-174	100	2.5
6-1305	100	3
6-413	100	4
6-137	100	5
6-1905	100	5.5
6-1395	100	6
6-1237	100	8
2-345	100.97	5.33
6-025	101	3
2-242	101.19	3.53
2-155	101.27	2.62
2-045	101.32	1.78
6-724	102	3
6-1163	102	4
6-1055	103	5
6-2121	104	5
6-1200	104	5.3
2-346	104.14	5.33
6-1720	104.2	5.7
6-1350	104.3	5.7
2-243	104.37	3.53
6-1175	104.5	3
6-589	105	2
6-1381	105	3
6-806	105	3.5
6-995	105	4
6-1074	105	5
6-094	106	3
6-253	106.8	2.66
6-1320	107	8
6-762	107.31	6.99
2-347	107.32	5.33
2-244	107.54	3.53
2-156	107.62	2.62
2-046	107.67	1.78
6-1106	108	8

Tel: +45 63 12 83 00 | Email: ps@hymatik.com | www.hymatik.com | Hvidkaervej 27a, DK-5250 Odense SV, Denmark

Parker no.	Ø d mm	Cross-section d_2
6-740	109	3
6-837	109.2	5.7
6-815	109.2	5.84
6-767	109.4	3.1
6-2036	109.5	5.33
6-1580	110	1.5
6-1367	110	2.5
6-903	110	3
6-1644	110	3.5
6-915	110	5
6-1671	110	6
2-348	110.49	5.33
2-245	110.72	3.53
6-1651	112	2.5
6-421	112	3
6-873	112	4
6-1182	112	7
2-349	113.67	5.33
2-425	113.67	6.99
2-246	113.89	3.53
2-157	113.97	2.62
6-982	114	3
6-1164	114	5
2-047	114.02	1.78
6-1005	114.2	5.7
6-769	114.4	3.1
6-1826	114.55	2.57
6-1151	115	2
6-274	115	3
6-1169	115	5
6-1660	115	5.33
6-1421	115	6
6-1322	116	3
6-1105	116.5	1.78
2-350	116.84	5.33
2-426	116.84	6.99

Parker no.	Ø d mm	Cross-section d_2
2-247	117.07	3.53
6-032	118	2
6-580	118.31	3.53
6-123	118.5	3
5-843	118.72	2.62
6-448	119.2	5.7
6-768	119.6	5.7
6-674	120	1.5
6-504	120	3
6-1076	120	4
6-1180	120	5
6-1003	120	6
6-1427	120	10
2-351	120.02	5.33
2-427	120.02	6.99
2-248	120.24	3.53
2-158	120.32	2.62
2-048	120.37	1.78
6-2064	121	8
6-961	122	3
6-1630	122	6
6-2107	123	3
2-352	123.19	5.33
2-428	123.19	6.99
2-249	123.42	3.53
6-1143	124	4
6-1281	125	2.5
6-612	125	3
6-1990	125	3.5
6-1199	125	4
6-115	125	8
5-850	125.09	6.6
6-255	126	5
6-1942	126.3	5.33
2-353	126.37	5.33
2-429	126.37	6.99

Parker no.	Ø d mm	Cross-section d_2
2-250	126.59	3.53
2-159	126.67	2.62
2-049	126.72	1.78
6-722	128	2
6-1473	128	3
6-1962	128	4
6-1073	128	5
6-1591	129	1.5
6-1096	129	4
6-451	129.2	5.7
2-354	129.54	5.33
2-430	129.54	6.99
2-251	129.77	3.53
6-693	130	2.5
6-1296	130	3
6-1084	130	4
6-902	130	5
6-2046	130	5.8
6-577	130	6
6-1436	131	5.3
6-1775	131.1	3.2
6-1217	131.5	4
6-095	132	3
6-1015	132	4
2-355	132.72	5.33
2-431	132.72	6.99
2-252	132.94	3.53
6-1933	133	3
2-160	133.02	2.62
2-050	133.07	1.78
6-688	133.35	5.33
6-812	133.5	12
6-515	134	3
6-1329	134	8
6-1783	135	1.5
6-1277	135	3

Tel: +45 63 12 83 00 | Email: ps@hymatik.com | www.hymatik.com | Hvidkaervej 27a, DK-5250 Odense SV, Denmark

O-ring dimension

Parker no.	Ø d mm	Cross-section d_2
6-059	135	3.23
6-060	135	3.43
6-844	135	4
6-1085	135	5
6-2000	135.5	6
2-356	135.89	5.33
2-432	135.89	6.99
6-1559	136	3
6-1154	136	4
2-253	136.12	3.53
6-1807	136.53	1.78
6-026	137	3
6-833	137	4
6-559	137	14
6-341	137.3	8
6-1949	137.5	3.3
6-379	138	2.1
6-224	138	6
2-357	139.07	5.33
2-433	139.07	6.99
2-254	139.29	3.53
2-161	139.37	2.62
6-698	140	2
6-511	140	3
6-1136	140	5
6-602	140	10
6-1051	142	4
6-1093	142	6
6-1207	142	12
2-358	142.24	5.33
2-434	142.24	6.99
2-255	142.47	3.53
6-1592	142.9	3.2
6-2149	143	1.45
6-512	144	3.7
6-1632	145	2.5

Parker no.	Ø d mm	Cross-section d_2
6-1696	145	2.88
6-1233	145	4
6-1046	145	5
2-359	145.42	5.33
2-435	145.42	6.99
2-256	145.64	3.53
2-162	145.72	2.62
6-061	146	3.23
6-1680	147.6	2.65
6-2021	148	2.5
6-756	148	10
2-257	148.52	3.53
2-360	148.59	5.33
2-436	148.59	6.99
6-1774	148.6	3.2
6-623	149.2	5.7
6-932	150	2
6-2022	150	2.5
6-689	150	3
6-872	150	4
6-1295	150	5
6-2129	150	5.3
6-222	150	5.4
6-1147	150	6
6-496	151	3
6-1803	151.39	2.57
6-318	151.7	5.6
2-361	151.77	5.33
2-437	151.77	6.99
2-258	151.99	3.53
6-1107	152	8
2-163	152.07	2.62
6-1594	152.4	3.2
6-1773	153.5	3.2
6-1625	154.6	1.78
6-1294	155	3

Parker no.	Ø d mm	Cross-section d_2
6-1390	155	3.53
6-1318	155	4
6-1324	155	5
6-773	155	10
6-1605	156	4
2-362	158.12	5.33
2-438	158.12	6.99
2-259	158.34	3.53
2-164	158.42	2.62
6-170	159	4
6-444	159.2	5.7
6-576	160	3
6-818	160	4
6-1081	160	5
6-1702	160	5.3
6-1292	160	6
6-103	161	3
6-1045	162	2.5
6-494	162.5	3.53
6-1815	163.07	1.63
6-1612	164	2
6-983	164.2	5.7
6-814	164.2	5.84
6-1865	164.33	2.62
2-363	164.47	5.33
2-439	164.47	6.99
2-260	164.69	3.53
2-165	164.77	2.62
6-911	165	2
6-1402	165	4
6-1529	165	5
6-1593	165.1	3.2
6-2125	165.3	1.78
6-1336	167.5	3.5
6-1929	168.4	6
6-746	169.2	5.7

Tel: +45 63 12 83 00 | Email: ps@hymatik.com | www.hymatik.com | Hvidkaervej 27a, DK-5250 Odense SV, Denmark

Parker no.	Ø d mm	Cross-section d_2
6-2131	169.98	3.56
6-1097	170	4
6-1290	170	5
2-364	170.82	5.33
2-440	170.82	6.99
6-282	171	11
2-261	171.04	3.53
2-166	171.12	2.62
6-1659	171.45	3.2
6-887	172	3
6-1177	172	4
6-1004	172	6
6-492	174	3
6-655	174.2	5.7
6-889	174.3	3.5
6-1356	175	5
6-1068	175	6
6-841	175	10
6-148	177	2
2-365	177.17	5.33
2-441	177.17	6.99
2-262	177.39	3.53
2-167	177.47	2.62
6-631	179	3
6-1098	179.2	5.7
6-704	180	3
6-1088	180	4
6-1280	180	5
6-1706	180	5.3
6-1110	180	6
6-1119	180	8
6-862	180	10
6-1108	180.52	5.33
5-434	180.54	6.99
6-1816	183	1.78
2-366	183.52	5.33
2-442	183.52	6.99
2-263	183.74	3.53
2-168	183.82	2.62
6-1058	185	3
6-1428	185	4
6-1028	185	5
6-1121	185	6
6-122	186.44	6.99
6-1007	187.1	8.4
6-466	188	4
6-2084	188.14	1.78
6-706	189.2	5.7
2-367	189.87	5.33
2-443	189.87	6.99
6-1848	190	1.78
6-495	190	3
6-1044	190	4
6-614	190	5
2-264	190.09	3.53
2-169	190.17	2.62
6-299	191	1.78
6-1260	192	4
6-1391	192	8
6-1238	194	14
6-2098	193.7	7
6-868	195	3.5
6-1283	195	5
6-1453	195	6
6-920	195.5	12
6-273	196	12
2-368	196.22	5.33
2-444	196.22	6.99
2-265	196.44	3.53
2-170	196.52	2.62
6-547	197	3
6-1932	197	6
6-1450	198	4
6-1563	198	8
6-1307	200	4
6-1139	200	5
6-226	200	6
6-865	201	4
2-369	202.57	5.33
2-445	202.57	6.99
2-266	202.79	3.53
2-171	202.87	2.62
6-342	204	8
6-1849	205	1.78
6-149	205	2
6-546	205	3
6-1565	205	5
6-1866	206	5.7
6-1153	206	7
6-1725	208	4
2-370	208.92	5.33
2-267	209.14	3.53
6-600	209.2	5.7
2-172	209.22	2.62
6-0629	210	3
6-1118	210	4
6-152	210	5
5-445	210.24	6.99
6-2051	212	5.3
6-461	213.68	7.14
6-954	214.63	2.18
6-1867	215	5
6-570	215	6
2-371	215.27	5.33
2-446	215.27	6.99
2-268	215.49	3.53
2-173	215.57	2.62
6-1302	216	4

Tel: +45 63 12 83 00 | Email: ps@hymatik.com | www.hymatik.com | Hvidkaervej 27a, DK-5250 Odense SV, Denmark

O-ring dimension

Parker no.	Ø d mm	Cross-section d_2
6-1048	218	5.8
6-1050	218	6
6-254	218	12
6-183	219	5.3
6-502	220	3
6-1063	220	5
6-1425	220	7
6-1560	221	1.78
2-372	221.62	5.33
2-269	221.84	3.53
2-174	221.92	2.62
6-1225	222	7
6-1679	223	2.65
6-949	223	5.33
6-1654	224	6
6-1945	224	7
6-1250	225	3
6-485	225	5
6-1896	226.2	3.53
6-150	227	2
2-373	227.97	5.33
2-447	227.97	6.99
6-1211	228	3
2-270	228.19	3.53
2-175	228.27	2.62
6-516	230	3
6-1727	230	4.5
6-1767	230	4.8
6-1948	230	5
6-1293	230	8
6-252	231.5	6
6-918	234.1	8.4
6-846	234.2	7
6-618	234.32	1.78
2-374	234.34	5.33
2-271	234.54	3.53

Parker no.	Ø d mm	Cross-section d_2
2-176	234.62	2.62
6-1451	235	4
6-2145	235	6
6-1360	236	6
6-635	236	7
6-412	238	5
6-1426	238	6
6-1282	238	10
6-1239	238	14
6-1895	239.2	3.53
6-604	240	3
6-1346	240	5
6-1564	240	8
6-436	240	12
6-1384	240.66	7.4
2-375	240.67	5.33
2-448	240.67	6.99
2-272	240.89	3.53
2-177	240.97	2.62
6-281	241	7
6-407	242	6
6-878	245	3
6-1861	245	3.53
6-1155	245	5
6-1534	245	7
6-671	245	10
6-967	245	10.85
6-1668	246	3
6-1263	246	4
2-376	247.02	5.33
2-273	247.24	3.53
2-178	247.32	2.62
6-1030	248	5
6-1167	248	7
6-1010	249.3	5.7
6-514	250	3

Parker no.	Ø d mm	Cross-section d_2
6-1993	250	4
6-1132	250	8
6-1582	250	10
6-1227	252	4
2-377	253.37	5.33
2-449	253.37	6.99
2-274	253.59	3.53
6-842	255	4
6-1522	255	5
6-1388	256	4
6-896	257.2	14
6-718	258.4	1.6
6-1860	259.2	3.53
6-1231	260	4
6-871	260	5
6-2146	260	6
6-1201	260	8
6-1042	261	6
6-336	262	5.33
5-976	264.79	6.6
6-1403	265	5
6-1190	266	4
2-378	266.07	5.33
2-450	266.07	6.99
2-275	266.29	3.53
6-505	270	3
6-988	270	5.33
6-1868	270	6
6-1331	272	8
6-936	272.64	3.53
6-175	273.05	3.53
6-1279	273.6	5
6-948	274	5.33
6-1476	275	5
6-2005	276	2.62
2-379	278.77	5.33

Tel: +45 63 12 83 00 | Email: ps@hymatik.com | www.hymatik.com | Hvidkaervej 27a, DK-5250 Odense SV, Denmark

Parker no.	Ø d mm	Cross-section d_2
2-451	278.77	6.99
6-1667	278.99	2.62
2-276	278.99	3.53
6-638	281	5
6-840	282.37	3.53
6-234	283	12
6-1477	285	5
6-2114	285	6
6-238	285	12
6-1240	285	14.1
6-1018	289.42	5.87
6-1191	290	5
6-241	291	6
2-380	291.47	5.33
2-452	291.47	6.99
2-277	291.69	3.53
6-1663	294	3
6-2140	295	6
6-917	296	6
6-1424	297	4
6-2037	297.8	6.99
6-854	298	2.62
6-1278	299.5	5
6-2134	300	4
6-2080	300	5
6-1168	300	6
6-1370	300	8
6-1310	300	10
2-381	304.17	5.33
2-453	304.17	6.99
2-278	304.39	3.53
6-553	304.8	1.78
6-1359	304.8	3.18
6-935	307.57	3.53
6-1351	309.3	5.7
6-1371	310	5
6-2111	310	2.62
6-1125	311	10
6-2109	312.9	1.78
6-1880	313	5.33
6-607	315	4
6-1171	315	5
6-510	315	6
5-488	316.56	2.62
2-454	316.87	6.99
6-1210	320	3
6-1707	320	3.53
6-716	320	6
6-1458	320	6.5
6-153	320	5.33
6-1172	320.62	3.53
6-1404	325	5
6-947	325	5.33
6-1546	328	6.99
6-1126	329	10
6-1784	329.57	4.8
2-382	329.57	5.33
2-455	329.57	6.99
2-279	329.79	3.53
6-1258	330	5
6-283	330	6
6-469	330	8
6-1408	331.5	6
6-1947	334	2.62
6-517	335	3
6-2013	335	5
6-1129	335	7
6-1235	336	5.33
6-1090	336	7
6-1043	338	6
6-1218	340	4
6-1881	340	5.33
6-1334	340	10
6-813	341	14
2-456	342.27	6.99
6-1255	343	6
6-1135	345	5
6-1918	349	5.33
6-1583	350	10
6-1639	351.21	4
6-1392	354.96	6.09
2-383	354.97	5.33
2-457	354.97	6.99
6-518	355	3
6-1888	355	8
2-280	355.19	3.53
6-895	359.2	13.8
6-1795	359.53	5.33
6-1142	360	4
6-1101	360	7.5
6-1836	362	4
6-1205	362	5
6-672	364	10
6-1786	365	5.3
6-203	367	3.5
2-458	367.67	6.99
6-1842	367.89	2.66
6-1254	368	6
6-807	370	5.5
6-1958	372	4
6-598	375	5.34
6-682	375	10
6-723	380	4
6-897	380	6
6-927	380	8
2-384	380.37	5.33
2-459	380.37	6.99
2-281	380.59	3.53

Tel: +45 63 12 83 00 | Email: ps@hymatik.com | www.hymatik.com | Hvidkaervej 27a, DK-5250 Odense SV, Denmark

O-ring dimension

Parker no.	Ø d mm	Cross-section d_2
6-204	381	5
6-1328	383.6	5
6-1241	385	14.2
6-711	388	5
6-1387	390	4
2-460	393.07	6.99
6-1374	395	12
6-209	398	8
6-892	400	5
6-458	400	12
6-934	401.71	3.53
2-282	405.26	3.53
2-385	405.26	5.33
2-461	405.26	6.99
6-938	409	6.99
6-1326	410	6
6-1335	412	8
6-1242	415	14.2
2-462	417.96	6.99
6-1352	419.3	5.7
6-165	420	3.5
6-164	420	5
6-173	422	2
6-215	425	6
6-1851	425.33	5.33
5-525	425.83	3.18
6-1937	428	5
6-741	428	5.7
6-898	429	6
6-734	430	12
6-1584	430	16
2-283	430.66	3.53
2-386	430.66	5.33
2-463	430.66	6.99
6-331	431.8	7.1
6-939	434	6.99
6-158	437	3
6-1256	440	4
6-1435	440	4.3
2-464	443.36	6.99
6-578	445	8
6-909	449	12
6-835	449.5	6.99
6-1521	450	2.62
6-669	450	10
6-1843	455	5.33
6-1674	455	6
6-530	455	8
2-284	456.06	3.53
2-387	456.06	5.33
2-465	456.06	6.99
6-1128	460	5.34
6-1753	460	6.99
6-1008	463	7
6-1072	465	5
6-799	468	6
2-466	468.76	6.99
6-1934	469	5.33
6-2015	470	4.5
6-827	470	10
6-930	477	10.5
6-1219	480	4
6-1243	480	14
6-256	480.06	10
2-388	481.41	5.33
2-467	481.46	6.99
6-1979	484	8.4
6-834	484.86	3.53
6-1080	485	5
6-1444	490	5
6-2073	492	3.53
2-468	494.16	6.99
6-328	500	3.53
6-1221	500	5
6-1420	500	6
6-800	500	8
6-261	504	6.99
6-260	506	2.62
2-389	506.81	5.33
2-469	506.86	6.99
6-2065	510	3
6-202	514	8
6-394	514	8
6-1837	515	5.33
6-1170	515	5
6-775	515	10
6-919	515.9	6
6-1158	520	5
6-1957	522	4
6-1823	522	10
6-529	524	10
6-951	526	6.99
6-467	528	8
6-262	532	7
6-1838	532.18	5.33
2-390	532.21	5.33
2-470	532.26	6.99
6-179	533.4	3.18
6-1409	534	8
6-621	535.46	7.24
6-1608	538	6
6-1299	540	5
6-836	543.5	6.99
6-690	546	7
6-1641	546	2.62
6-670	550	10
6-1952	555	3
2-391	557.61	5.33

Tel: +45 63 12 83 00 | Email: ps@hymatik.com | www.hymatik.com | Hvidkaervej 27a, DK-5250 Odense SV, Denmark

Parker no.	Ø d mm	Cross-section d_2
2-471	557.66	6.99
6-462	558	10
6-1964	560	7
6-1229	564.3	6.99
6-709	565	7
6-1678	571	8
6-176	577.85	6.99
6-1300	579	5
6-626	580	8
6-1127	580.5	3.53
2-392	582.68	5.33
2-472	582.68	6.99
6-1244	585	14
6-1963	587	7
6-1953	589	3
6-817	590	10
6-831	590	3.5
6-380	594.51	7.14
6-1844	595	5.33
6-2023	598	7
6-1858	602	7
6-233	602	8
6-1301	602	5
6-422	607	4
6-320	608	10
2-473	608.08	6.99
2-393	608.08	5.33
6-1220	610	4
6-1017	613.92	6.99
6-742	614	7
6-1157	615	5
6-647	617	7
6-1841	618.5	2
6-265	619.5	8
6-1528	621	8.5
6-278	622	8

Parker no.	Ø d mm	Cross-section d_2
6-1824	623.08	5.33
6-247	624	6.99
6-1262	632	6
2-394	633.48	5.33
2-474	633.48	6.99
6-536	635	5
6-986	635	9
6-1716	635	10
6-235	637	10
6-644	638.89	5.44
6-1308	640	6
6-1859	640	7
6-1960	645	3.53
6-1959	645	4
6-381	647.7	6.99
2-395	658.88	5.33
2-475	658.88	6.99
6-1418	661	14
6-653	664	5
6-645	665	5
6-816	670	10
6-1443	675	5.3
6-301	677	7
6-535	680	5
6-236	689	10
6-1742	690	8
6-266	693.5	10.1
6-1160	695	5
6-701	695	6.99
6-321	700	10
5-092	701.68	6.99
6-702	707	6.99
6-668	708	10
6-531	710	5.33
6-521	716	8
6-372	720	6.99

Parker no.	Ø d mm	Cross-section d_2
6-389	723.9	6.99
6-267	734	6.99
6-1245	735	15
6-305	736	3.53
6-1847	736	7
6-1577	736.6	5
6-1309	740	6
6-228	740	10
6-1840	745	10
6-943	748.5	7
6-2067	750	3
6-1079	750	5
6-1071	755	5
6-417	760	5
6-303	763.01	6.99
6-1173	764	6.99
6-1222	770	7
6-667	770	10
6-1944	777	12
6-1215	780	7
6-248	783	6.99
6-1956	786	4
6-237	786	10
6-649	798	7
6-415	800	5.33
6-2042	801	4
6-279	810	7.1
6-322	810	10
6-1943	818	12
6-509	819	7
6-2066	820	3
6-648	820	7
6-268	827	7
6-1131	835.5	7
6-229	837	10
6-190	840	12

Tel: +45 63 12 83 00 | Email: ps@hymatik.com | www.hymatik.com | Hvidkaervej 27a, DK-5250 Odense SV, Denmark

O-ring dimension

Parker no.	Ø d mm	Cross-section d_2
6-1130	840.5	7
6-508	849	7
6-330	850	10
6-650	853	7
6-1246	853	20
6-2009	855	10
6-1223	860	3
6-707	865	8.4
6-363	865	12
6-890	870	8
6-597	875	8
6-230	882	10
6-304	887	6.99
6-1156	890	5
6-924	900	10
6-249	910	6.99
6-335	914	5.33
6-708	929	6
6-250	936	6.99
6-409	940	10
6-269	950.5	12.06
6-302	955	12.6
6-334	960	5.33
6-527	974	7
6-232	984	10
6-460	996	7
6-534	1004	8
6-1213	1005	15
6-332	1011	5.33
6-280	1016	7
6-2124	1020	5.7
6-239	1029	10
6-333	1042	5.33
6-270	1046	7
6-393	1060	10
6-385	1071	14.4

Parker no.	Ø d mm	Cross-section d_2
6-240	1075	10
6-271	1103	10
6-245	1154	10
6-1304	1840	5
6-1325	1865	5
6-1066	1960	10.85
6-1067	2072	10
6-1845	2324	6.99
6-1846	2350	6.99
6-984	2965	7

For articles printed in bold, fitting Parker Parbak® back-up rings are available from stock.

Parbak®-back-up ring 8-xxx sizes

Parbak® Back-up rings prevent extrusion in high-pressure applications, help to maintain the lubricant film and thus prolong the service life of O-rings.
Developed primarily for service in hydraulic fluids at 40 °C to 120 °C, Parker's standard Parbak® N0300-90 compound provide the maximum benefits in back-up ring service. Compounds for use in other fluids and for temperatures up to 200 °C are available on request. Parbak® Back-up rings will stretch up to 50 %, and are quickly and easily installed. Advantages of the contour design are obtained regardless of how Parbak® Back-up rings are installed — they may be installed, toward or away from the O-ring.

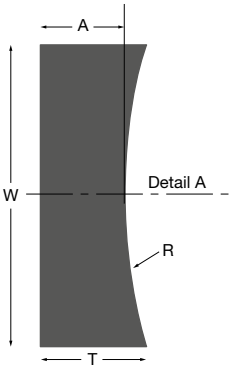

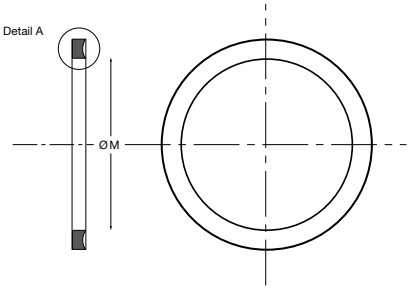

Tel: +45 63 12 83 00 | Email: ps@hymatik.com | www.hymatik.com | Hvidkaervej 27a, DK-5250 Odense SV, Denmark

Parbak®-back-up ring 8-xxx sizes

Parker no.	M (mm)	W±0.08 (mm)
8-004	2.44	1.35
8-005	3.23	1.35
8-006	3.56	1.35
8-007	4.34	1.35
8-008	5.13	1.35
8-009	5.94	1.35
8-010	6.73	1.35
8-011	8.31	1.35
8-012	9.91	1.35
8-013	11.56	1.35
8-014	13.16	1.35
8-015	14.73	1.35
8-016	16.33	1.35
8-017	17.91	1.35
8-018	19.51	1.35
8-019	21.08	1.35
8-020	22.68	1.35
8-021	24.26	1.35
8-022	25.86	1.35
8-023	27.43	1.35
8-024	29.03	1.35
8-025	30.61	1.35
8-026	32.21	1.35
8-027	33.78	1.35
8-028	35.38	1.35
8-029	38.56	1.35
8-030	41.73	1.35
8-031	44.91	1.35
8-032	48.08	1.35
8-033	51.26	1.35
8-034	54.43	1.35
8-035	57.61	1.35
8-036	60.78	1.35
8-037	63.96	1.35
8-038	67.13	1.35
8-039	70.31	1.35
8-040	73.48	1.35
8-041	76.66	1.35
8-042	83.01	1.35
8-043	89.36	1.35
8-044	95.71	1.35
8-045	102.06	1.35
8-046	108.41	1.35
8-047	114.76	1.35
8-048	121.11	1.35
8-049	127.46	1.35
8-050	133.81	1.35
8-102	1.96	2.18
8-103	2.77	2.18
8-104	3.56	2.18
8-105	4.34	2.18
8-106	5.13	2.18
8-107	5.94	2.18
8-108	6.73	2.18
8-109	8.31	2.18
8-110	9.91	2.18
8-111	11.48	2.18
8-112	13.08	2.18
8-113	14.66	2.18
8-114	16.26	2.18
8-115	17.83	2.18
8-116	19.43	2.18
8-117	21.11	2.18
8-118	22.68	2.18
8-119	24.28	2.18
8-120	25.86	2.18
8-121	27.46	2.18
8-122	29.03	2.18
8-123	30.63	2.18
8-124	32.21	2.18
8-125	33.81	2.18
8-126	35.38	2.18
8-127	36.98	2.18
8-128	38.56	2.18
8-129	40.16	2.18
8-130	41.73	2.18
8-131	43.33	2.18
8-132	44.91	2.18
8-133	46.51	2.18
8-134	48.08	2.18
8-135	49.68	2.18
8-136	51.26	2.18
8-137	52.86	2.18
8-138	54.43	2.18
8-139	56.03	2.18
8-140	57.61	2.18
8-141	59.21	2.18
8-142	60.78	2.18
8-143	62.38	2.18
8-144	63.96	2.18
8-145	65.56	2.18
8-146	67.13	2.18
8-147	68.73	2.18
8-148	70.31	2.18
8-149	71.91	2.18
8-150	73.48	2.18
8-151	76.66	2.18
8-152	83.01	2.18
8-153	89.36	2.18
8-154	95.71	2.18
8-155	102.06	2.18
8-156	108.41	2.18
8-157	114.76	2.18
8-158	121.11	2.18
8-159	127.46	2.18
8-160	133.81	2.18
8-161	140.16	2.18
8-162	146.51	2.18

Tel: +45 63 12 83 00 | Email: ps@hymatik.com | www.hymatik.com | Hvidkaervej 27a, DK-5250 Odense SV, Denmark

Parbak®-back-up ring 8-xxx sizes

Parker no.	M (mm)	W±0.08 (mm)
8-163	152.86	2.18
8-164	159.21	2.18
8-165	165.56	2.18
8-166	171.91	2.18
8-167	178.26	2.18
8-168	184.61	2.18
8-169	190.96	2.18
8-170	197.31	2.18
8-171	203.66	2.18
8-172	210.01	2.18
8-173	216.36	2.18
8-174	222.71	2.18
8-175	229.06	2.18
8-176	235.41	2.18
8-177	241.76	2.18
8-178	248.11	2.18

Parker no.	M (mm)	W±0.1 (mm)
8-201	5.13	3
8-202	6.73	3
8-203	8.3	3
8-204	9.9	3
8-205	11.56	3
8-206	13.16	3
8-207	14.73	3
8-208	16.33	3
8-209	17.9	3
8-210	19.46	3
8-211	21.03	3
8-212	22.63	3
8-213	24.21	3
8-214	25.81	3
8-215	27.38	3
8-216	28.98	3
8-217	30.56	3
8-218	32.16	3
8-219	33.88	3
8-220	35.48	3
8-221	37.06	3
8-222	38.66	3
8-223	41.83	3
8-224	45.01	3
8-225	48.18	3
8-226	51.36	3
8-227	54.53	3
8-228	57.71	3
8-229	60.88	3
8-230	64.06	3
8-231	66.83	3
8-232	70	3
8-233	73.18	3
8-234	76.35	3
8-235	79.53	3
8-236	82.7	3

Parker no.	M (mm)	W±0.1 (mm)
8-237	85.88	3
8-238	89.05	3
8-239	92.23	3
8-240	95.4	3
8-241	98.58	3
8-242	101.75	3
8-243	104.93	3
8-244	108.1	3
8-245	111.28	3
8-246	114.45	3
8-247	117.63	3
8-248	121.11	3
8-249	124.28	3
8-250	127.46	3
8-251	130.63	3
8-252	133.81	3
8-253	136.98	3
8-254	140.16	3
8-255	143.33	3
8-256	146.51	3
8-257	149.68	3
8-258	152.86	3
8-259	159.21	3
8-260	165.56	3
8-261	171.91	3
8-262	178.26	3
8-263	184.61	3
8-264	190.96	3
8-265	197.31	3
8-266	203.66	3
8-267	210.01	3
8-268	216.36	3
8-269	222.71	3
8-270	229.06	3
8-271	235.41	3
8-272	241.76	3

Tel: +45 63 12 83 00 | Email: ps@hymatik.com | www.hymatik.com | Hvidkaervej 27a, DK-5250 Odense SV, Denmark

Parbak®-back-up ring 8-xxx sizes

Parker no.	M (mm)	W±0.1 (mm)
8-273	248.11	3
8-274	254.46	3
8-275	267.16	3
8-276	279.86	3
8-277	292.56	3
8-278	305.26	3
8-279	330.66	3
8-280	356.05	3
8-281	381.46	3
8-282	406.12	3
8-283	431.52	3
8-284	456.92	3

Parker no.	M (mm)	W±0.13 (mm)
8-309	11.43	4.65
8-310	13.03	4.65
8-311	14.6	4.65
8-312	16.2	4.65
8-313	17.78	4.65
8-314	19.38	4.65
8-315	20.96	4.65
8-316	22.56	4.65
8-317	24.13	4.65
8-318	25.73	4.65
8-319	27.31	4.65
8-320	28.91	4.65
8-321	30.42	4.65
8-322	32.08	4.65
8-323	33.43	4.65
8-324	35.26	4.65
8-325	38.43	4.65
8-326	41.61	4.65
8-327	44.78	4.65
8-328	47.96	4.65
8-329	51.13	4.65
8-330	54.31	4.65
8-331	57.61	4.65
8-332	60.78	4.65
8-333	63.96	4.65
8-334	67.13	4.65
8-335	70.31	4.65
8-336	73.48	4.65
8-337	76.66	4.65
8-338	79.83	4.65
8-339	83.13	4.65
8-340	86.31	4.65
8-341	89.48	4.65
8-342	92.66	4.65
8-343	95.83	4.65
8-344	99.01	4.65

Parker no.	M (mm)	W±0.13 (mm)
8-345	102.31	4.65
8-346	105.49	4.65
8-347	108.66	4.65
8-348	111.84	4.65
8-349	115.01	4.65
8-350	118.19	4.65
8-351	121.36	4.65
8-352	124.54	4.65
8-353	127.71	4.65
8-354	130.89	4.65
8-355	134.09	4.65
8-356	137.24	4.65
8-357	140.41	4.65
8-358	143.59	4.65
8-359	146.76	4.65
8-360	149.94	4.65
8-361	153.11	4.65
8-362	159.46	4.65
8-363	165.81	4.65
8-364	172.16	4.65
8-365	178.51	4.65
8-366	184.86	4.65
8-367	191.21	4.65
8-368	197.56	4.65
8-369	203.91	4.65
8-370	210.26	4.65
8-371	216.61	4.65
8-372	222.96	4.65
8-373	229.31	4.65
8-374	235.66	4.65
8-375	242.01	4.65
8-376	248.36	4.65
8-377	254.71	4.65
8-378	267.41	4.65
8-379	280.11	4.65
8-380	292.81	4.65

Tel: +45 63 12 83 00 | Email: ps@hymatik.com | www.hymatik.com | Hvidkaervej 27a, DK-5250 Odense SV, Denmark

Parbak®-back-up ring 8-xxx sizes

Parker no.	M (mm)	W±0.13 (mm)
8-381	305.51	4.65
8-382	330.91	4.65
8-383	356.31	4.65
8-384	381.71	4.65
8-385	406.6	4.65
8-386	432	4.65
8-387	457.4	4.65
8-388	482.75	4.65
8-389	508.15	4.65
8-390	533.55	4.65
8-391	558.95	4.65
8-392	584.02	4.65
8-393	609.42	4.65
8-394	634.82	4.65
8-395	660.22	4.65

Parker no.	M (mm)	W±0.15 (mm)
8-425	115.6	5.99
8-426	118.77	5.99
8-427	121.95	5.99
8-428	125.2	5.99
8-429	128.3	5.99
8-430	131.47	5.99
8-431	134.65	5.99
8-432	137.82	5.99
8-433	141	5.99
8-434	144.17	5.99
8-435	147.35	5.99
8-436	150.52	5.99
8-437	153.7	5.99
8-438	159.36	5.99
8-439	165.71	5.99
8-440	172.06	5.99
8-441	178.41	5.99
8-442	184.76	5.99
8-443	191.11	5.99
8-444	197.46	5.99
8-445	203.81	5.99
8-446	216.51	5.99
8-447	229.21	5.99
8-448	241.91	5.99
8-449	254.61	5.99
8-450	267.31	5.99
8-451	280.01	5.99
8-452	292.71	5.99
8-453	305.41	5.99
8-454	318.11	5.99
8-455	330.81	5.99
8-456	343.51	5.99
8-457	356.21	5.99
8-458	368.91	5.99
8-459	381.61	5.99
8-460	394.31	5.99

Parker no.	M (mm)	W±0.15 (mm)
8-461	406.5	5.99
8-462	419.2	5.99
8-463	431.9	5.99
8-464	444.6	5.99
8-465	457.3	5.99
8-466	470	5.99
8-467	482.7	5.99
8-468	495.4	5.99
8-469	508.1	5.99
8-470	533.5	5.99
8-471	558.9	5.99
8-472	584.3	5.99
8-473	609.7	5.99
8-474	635.1	5.99
8-475	660.5	5.99

Parbak®-back-up ring 8-xxx sizes

Other dimensions			
Parker no.	R (mm)	T (mm)	A (mm)
004-050	2.21	1.24	1.14
102-178	3.28	1.35	1.14
201-284	4.42	1.27	1.02
309-395	6.65	1.93	1.52
425-475	8.74	2.97	2.44

Size tolerances	
Parker no.	A ± mm
004-284	0.08
309-325	0.10
425-475	0.13

Size tolerances		
Parker no.	M ±	
004-009	0.15	mm
009-012	0.18	mm
012-019	0.23	mm
020-029	1.00	%
030-041	0.86	%
042-050	0.78	%
102-107	0.15	mm
108-110	0.18	mm
111-117	0.25	mm
118-128	1.10	%
129-151	0.95	%
152-164	0.78	%
165-178	0.74	%
201-204	0.18	mm
204-211	0.25	mm
212-227	1.10	%
228-235	0.90	%
236-259	0.78	%
260-277	0.74	%
278-284	0.67	%
309-315	0.25	mm
316-325	1.10	%
326-338	0.95	%
339-362	0.78	%
363-380	0.74	%
381-395	0.67	%
425-438	0.78	%
439-452	0.74	%
453-475	0.67	%

Tel: +45 63 12 83 00 | Email: ps@hymatik.com | www.hymatik.com | Hvidkaervej 27a, DK-5250 Odense SV, Denmark

Tel: +45 63 12 83 00 | Email: ps@hymatik.com | www.hymatik.com | Hvidkaervej 27a, DK-5250 Odense SV, Denmark

Parker-Prädifa worldwide

Europe, Middle East, Africa

AE – United Arab Emirates, Dubai
Tel: +971 4 8127100
parker.me@parker.com

AT – Austria, Wiener Neustadt
Tel: +43 (0)2622 23501-0
parker.austria@parker.com

AT – Eastern Europe, Wiener Neustadt
Tel: +43 (0)2622 23501 900
parker.easteurope@parker.com

AZ – Azerbaijan, Baku
Tel: +994 50 2233 458
parker.azerbaijan@parker.com

BE/LU – Belgium, Nivelles
Tel: +32 (0)67 280 900
parker.belgium@parker.com

BG – Bulgaria, Sofia
Tel: +359 2 980 1344
parker.bulgaria@parker.com

BY – Belarus, Minsk
Tel: +48 (0)22 573 24 00
parker.poland@parker.com

CH – Switzerland, Etoy
Tel: +41 (0)21 821 87 00
parker.switzerland@parker.com

CZ – Czech Republic, Klecany
Tel: +420 284 083 111
parker.czechrepublic@parker.com

DE – Germany, Kaarst
Tel: +49 (0)2131 4016 0
parker.germany@parker.com

DK – Denmark, Ballerup
Tel: +45 43 56 04 00
parker.denmark@parker.com

ES – Spain, Madrid
Tel: +34 902 330 001
parker.spain@parker.com

FI – Finland, Vantaa
Tel: +358 (0)20 753 2500
parker.finland@parker.com

FR – France, Contamine s/Arve
Tel: +33 (0)4 50 25 80 25
parker.france@parker.com

GR – Greece, Piraeus
Tel: +30 210 933 6450
parker.greece@parker.com

HU – Hungary, Budaörs
Tel: +36 23 885 470
parker.hungary@parker.com

IE – Ireland, Dublin
Tel: +353 (0)1 466 6370
parker.ireland@parker.com

IL – Israel
Tel: +39 02 45 19 21
parker.israel@parker.com

IT – Italy, Corsico (MI)
Tel: +39 02 45 19 21
parker.italy@parker.com

KZ – Kazakhstan, Almaty
Tel: +7 7273 561 000
parker.easteurope@parker.com

NL – The Netherlands, Oldenzaal
Tel: +31 (0)541 585 000
parker.nl@parker.com

NO – Norway, Asker
Tel: +47 66 75 34 00
parker.norway@parker.com

PL – Poland, Warsaw
Tel: +48 (0)22 573 24 00
parker.poland@parker.com

PT – Portugal
Tel: +351 22 999 7360
parker.portugal@parker.com

RO – Romania, Bucharest
Tel: +40 21 252 1382
parker.romania@parker.com

RU – Russia, Moscow
Tel: +7 495 645-2156
parker.russia@parker.com

SE – Sweden, Spånga
Tel: +46 (0)8 59 79 50 00
parker.sweden@parker.com

SK – Slovakia, Banská Bystrica
Tel: +421 484 162 252
parker.slovakia@parker.com

SL – Slovenia, Novo Mesto
Tel: +386 7 337 6650
parker.slovenia@parker.com

TR – Turkey, Istanbul
Tel: +90 216 4997081
parker.turkey@parker.com

UA – Ukraine, Kiev
Tel: +48 (0)22 573 24 00
parker.poland@parker.com

UK – United Kingdom, Warwick
Tel: +44 (0)1926 317 878
parker.uk@parker.com

ZA – South Africa, Kempton Park
Tel: +27 (0)11 961 0700
parker.southafrica@parker.com

North America

CA – Canada, Milton, Ontario
Tel: +1 905 693 3000

US – USA, Cleveland
Tel: +1 216 896 3000

Asia Pacific

AU – Australia, Castle Hill
Tel: +61 (0)2-9634 7777

CN – China, Shanghai
Tel: +86 21 2899 5000

HK – Hong Kong
Tel: +852 2428 8008

IN – India, Mumbai
Tel: +91 22 6513 7081-85

JP – Japan, Tokyo
Tel: +81 (0)3 6408 3901

KR – South Korea, Seoul
Tel: +82 2 559 0400

MY – Malaysia, Shah Alam
Tel: +60 3 7849 0800

NZ – New Zealand, Mt Wellington
Tel: +64 9 574 1744

SG – Singapore
Tel: +65 6887 6300

TH – Thailand, Bangkok
Tel: +662 186 7000

TW – Taiwan, Taipei
Tel: +886 2 2298 8987

South America

AR – Argentina, Buenos Aires
Tel: +54 3327 44 4129

BR – Brazil, Sao Jose dos Campos
Tel: +55 800 727 5374

CL – Chile, Santiago
Tel: +56 2 623 1216

MX – Mexico, Toluca
Tel: +52 72 2275 4200

© 2021 Parker Hannifin Corporation · Subject to change.

PTD 5712 EN · Pdf · 03/2021

Parker Hannifin GmbH
Engineered Materials Group Europe
P.O. Box 1641
74306 Bietigheim-Bissingen · Germany
Tel. +49 (0) 7142 351-0
www.parker.com/praedifa
e-mail: praedifa@parker.com

Parker Prädifa