

O-RING HANDBOOK

Parker | Prädifa

Tel: +45 63 12 83 00 | Email: ps@hymatik.com | www.hymatik.com | Hvidkaervej 27a, DK-5250 Odense SV, Denmark

Preamble

Sealing technology by Parker Prädifa
The Engineered Materials Group of the Parker Hannifin Corporation is the worldwide leader in the field of designing, developing and manufacturing sealing systems, vibration dampers, EMI shielding systems and heat dissipation materials.

With in-house compound and design expertise, testing and process technology plus state-of-the-art manufacturing facilities the Parker Engineered Materials Group offers a wide portfolio ranging from standard products through to tailored new and system developments. The latter frequently result from close development partnerships with customers in keeping with Parker's motto: "Engineering Your Success".

Product lines of the Parker's Prädifa Technology Division
The Prädifa Technology Division manufactures O-Rings and special moulded parts for many industrial sectors:
- Automotive Engineering
- Chemical and Bio-Chemical Industries
- Fluid Power
- Refrigeration and Air Conditioning Technology
- Petroleum Sector
- Medical Technology
- Aerospace
- Semi-Conductor Industry and many other

In addition, the product range includes:
- Parbak® Back-up Rings
- Precision Extruded Components
- Medical Products
- O-Ring Kits
- Assembly Greases and Lubricants
- ParCoat® Surface Coatings

Materials
Tailored materials require tailored compounding processes. Therefore, Parker produces its rubber mixtures and polymerises its thermoplastic materials in-house. The portfolio of materials developed and produced by Parker ranges from compounds for extremely low temperatures down to –110 °C / 230 °F (silicones) to very high temperatures up to +320 °C / 600 °F (Parofluor®/FFKM). Parker offers the appropriate compound for the specific application requirements including excellent resistance against aggressive chemicals.

The Parker O-Ring Handbook
The Parker O-Ring Handbook has been a standard reference work used by seal designers for decades. It contains comprehensive information about the properties of the most important sealing elastomers, typical O-Ring application examples, examples of statically acting seal designs plus descriptions of conditions that may lead to O-Ring failure. In addition, the handbook contains an overview of international dimensions and standards as well as media compatibility data for fluids, gases and solids.



Tel: +45 63 12 83 00 | Email: ps@hymatik.com | www.hymatik.com | Hvidkaervej 27a, DK-5250 Odense SV, Denmark

Parker´s safety programme

Warning - User Responsibility
This document and other information from Parker Hannifin Corporation, its subsidiaries and authorized distributors provide product or system options for further investigation by users having technical expertise.

The user, through its own analysis and testing, is solely responsible for making the final selection of the system and components and assuring that all performance, endurance, maintenance, safety and warning requirements of the application are met. The user must analyze all aspects of the application, follow applicable industry standards, and follow the information concerning the product in the current product catalogue and in any materials provided by Parker or its subsidiaries or authorized distributors.
To the extent that Parker or its subsidiaries or authorized distributors provide component or system options based upon data or specifications provided by the user, the user is responsible for determining that such data and specifications are suitable and sufficient for all applications and responsibly foreseeable uses of the components or systems.

Range of Application
Our seals may only be used within the application parameters stated in our documents as regards compatibility with contact media, pressures, temperatures and time of storage. Application or use outside of the specified application parameters as well as the selection of different compounds by mistake may result in damage to life, the environment and/or equipment and facilities.

The information contained in our publications is based on know-how developed over decades of experience in the manufacturing and application of seals. Despite this experience, unknown factors arising out of the practical application of seals may considerably affect the overall applicability of this information in such a way that the recommendations provided herein are not to be considered generally binding.

The data for operating pressure, operating temperature, and surface speed stated in the columns represent maximum values and are interrelated. Under extreme working conditions it is recommended not to use all maximum values simultaneously.

For special requirements (pressure, temperature, speed, etc.) please contact our consultancy service, so that suitable materials and/or designs can be recommended.

Compatibility of Seals and Operating Media / Cleaning Agents
Due to the great diversity of operational parameters affecting fluidic devices and their impact on seals, it is absolutely imperative that manufacturers of these devices approve seals for functional and operational suitability under field conditions.

Furthermore, in view of the consistent increase of newly available media used as hydraulic oils, lubricants, and cleaning agents, special attention is invited to the aspect of compatibility with sealing elastomers currently in use.

Additives contained in base media in order to enhance certain functional characteristics may affect compatibility characteristics of sealing materials.

For this reason, it is imperative that any product equipped with our seals be tested for compatibility with operational media or cleaning agents approved or specified by you either at your plant or by means of field tests prior to any field use.

We kindly ask you to comply with this notice since, as a manufacturer of seals, we are not in a position, as a matter of principle, to perform simulations of any and all conditions present in the final application nor of knowing the composition of the operational media and cleaning agents used.

Design Modifications
We reserve the right to make design modifications without prior notification.

Prototypes and Samples
Prototypes and samples are produced from experimental moulds. The subsequent series production may differ in terms of production techniques from the prototype production unless specific agreement to the contrary was reached beforehand.

Delivery and Services
The delivery guarantee (availability of moulds) for individual dimensions of our range of products is limited to a period of 7 years.

Damaged moulds, including standard items, can only be replaced in case of sufficient demand. Most of the dimensions stated in this catalogue are normally (but not as a matter of course) available ex stock.

For the production of smaller quantities, special compounds, and in case of special production procedures, we reserve the right of charging a prorated share of set-up costs.

All deliveries and services are subject to our terms.

Quality Systems
Our manufacturing sites are certified according to ISO 9001 and/or IAT16949 and/or EN9100.

Copyright
All rights reserved by Parker Hannifin Corporation. Extracts may only be taken with permission. Modification rights reserved.

Validity
This edition supersedes all prior documents.

Tel: +45 63 12 83 00 | Email: ps@hymatik.com | www.hymatik.com | Hvidkaervej 27a, DK-5250 Odense SV, Denmark

Contents

1 Introduction 7
1.1 O-Ring sealing 7
1.2 O-ring compounds 7

2 Forms of installation 8
2.1 Definition of design 8
2.2 Static seals 8
2.2.1 Static seals – radial 9
2.2.2 Static seals – axial 10
2.2.3 Static seals – dovetail groove 11
2.3 Dynamic seals 11
2.3.1 Dynamic seals – hydraulics 12
2.3.2 Dynamic seals – pneumatic 13
2.4 Drive belts 14
2.5 Design and assembly instructions 17
2.5.1 Chamfers 17
2.5.2 Traversing of cross drilled ports 18
2.5.3 Impurities and cleaning materials 18
2.5.4 Elongation 19
2.5.5 Rolling 19
2.5.6 Sharp edges 19
2.5.7 Fitting aids 19

3 Design recommendations 20
3.1 Static seals 20
3.1.1 Compression and design dimensions 20
3.1.2 Piston seal static 21
3.1.3 Rod seal static 26
3.1.4 Flange seal static 29
3.2 Dynamic sealing 33
3.2.1 Hydraulic – compression and design dimensions 33
3.2.2 Hydraulic – piston seal dynamic 34
3.2.3 Hydraulic – rod seal dynamic 36
3.2.4 Pneumatic – compression and design dimensions . . . 37
3.2.5 Pneumatic – piston seal dynamic 38
3.2.6 Pneumatic – rod seal dynamic 40
3.2.7 Pneumatic – floating assembly dynamic 41

4 O-rings and Parbak® back-up rings 43
4.1 O-ring dimension 43
4.2 O-Rings for threaded connectors 48
4.2.1 DIN EN ISO 6149-1 threaded connectors for metric tube fittings and ISO 11926-1 connectors for UNF with conical counterbore 48
4.2.2 Threaded fitting with 24° seal face for DIN 3861 bore type W 48
4.2.3 SAE J 514 threaded connectors, SAE J 475 (ISO 725) screw threads 49
4.2.4 MS 33649 threaded connectors, MIL-S-8879 straight threaded bore 50
4.2.5 O-Ring seals for MS 33656, compression fittings 50
4.3 Parbak® Back-up rings 51
4.3.1 Introduction 51

5 Other products and accessories 58
5.1 Rubber moulded parts 58
5.2 Assembly grease and lubricants 58
5.3 O-ring-kits 60
5.3.1 Parker O-Ring Kit 60
5.3.2 O-Ring Kit No. 4 61
5.3.3 O-Ring Kit No. 6 62
5.3.4 O-Ring Kit No. 7 62
5.4 O-Ring measuring cone and measuring tape 63
5.5 O-Ring assembly aids 64
5.6 ParCoat® – the smooth approach to O-Ring assembly . 64

6 Elastomeric sealing compounds 66
6.1 General information 66
6.2 Overview of sealing materials 66
6.2.1 Thermoplastics (plastomers) 66
6.2.2 Elastomers 67
6.2.3 Thermoplastic elastomers (TPE) 68
6.2.4 Duroplastics (duromers) 69
6.3 Basic elastomers 69
6.3.1 Acrylonitrile butadiene rubber (NBR) 69
6.3.2 Butadiene rubber (BR) 70
6.3.3 Butyl rubber (IIR) 70
6.3.4 Missing Translation: Chlorobutyl rubber (CIIR) 70
6.3.5 Chloroprene rubber (CR) 70
6.3.6 Chlorosulfonyl polyethylene rubber (CSM) 70
6.3.7 Epichlorohydrin rubber (CO, ECO) 71
6.3.8 Ethylene acrylate rubber (AEM) 71
6.3.9 Ethylene propylene rubber (EPM, EPDM) 71
6.3.10 Fluorocarbon rubber (FKM) 71
6.3.11 Fluorosilicone rubber (FVMQ) 72
6.3.12 Hydrogenated nitrile butadiene rubber (HNBR) 72
6.3.13 Perfluorinated rubber (FFKM) 72
6.3.14 Polyacrylate rubber (ACM) 73
6.3.15 Thermoplastic Polyutethane (TPU) 73
6.3.16 Silicone rubber (LSR, Q, MQ, VMQ) 73
6.3.17 Styrene-butadiene rubber (SBR) 74
6.4 Compound selection 74
6.5 Compound selection according to SAE and ASTM specifications 76
6.6 compounds 77
6.7 Approvals 80
6.7.1 Compounds for gas supply and consumer appliances. 80
6.7.2 Oxygen valves 80
6.7.3 Compounds for the preparation, storage and distribution of drinking water 80
6.7.4 Compounds for the food and pharmaceutical industry . 81

Tel: +45 63 12 83 00 | Email: ps@hymatik.com | www.hymatik.com | Hvidkaervej 27a, DK-5250 Odense SV, Denmark

Contents

7 Applications 83
7.1 Automotive industry 83
7.1.1 Combustion engine 83
7.1.2 Fuel system for liquid fuels 83
7.1.3 Brake system 83
7.1.4 Emission reduction through exhaust gas treatment . . 83
7.1.5 Thermal Management 83
7.1.6 Electrical and electronic applications 84
7.1.7 Hydrogen and fuel cells 84
7.2 Biomedicine 84
7.3 Chemical processing 84
7.4 Environmentally friendly hydraulic fluids 84
7.5 Solar systems 85
7.6 Geothermal energy 85
7.7 Extreme temperatures 85
7.7.1 High temperatures 85
7.7.2 Low temperatures 86
7.8 Gas applications 88
7.9 Semiconductor production 88
7.10 Refrigeration and air-conditioning technology, propellants 88
7.11 Food industry and pharmaceutical industry 90
7.12 Aerospace 90
7.13 Nuclear engineering 90
7.14 Oil and gas industry 90
7.15 Sanitary / heating 91
7.16 Vacuum seals 91
7.17 Fungus-resistant compounds 92

8 Sealing terminology 93
8.1 General selection criteria 93
8.2 Abrasion 93
8.3 Ageing 93
8.4 Ageing tests 93
8.5 Coefficient of thermal expansion 93
8.6 Compression set 94
8.7 Tightness, technical tightness 95
8.8 Elastomer Compatibility Index (ECI) 95
8.9 Electrical properties of elastomers 97
8.10 Corrosion 97
8.10.1 Corrosion caused by free sulphur 97
8.10.2 Corrosion caused by the formation of hydrochloric acid 97
8.10.3 Electrochemical corrosion 97
8.11 Gas leakage rate 97
8.12 Hardness 99
8.13 Gough-Joule effect 100
8.14 Storage, storage time and cleaning of elastomers . . 100
8.15 Cross-section reduction caused by elongation 101
8.16 Surface finish of seal faces 101
8.17 Friction and wear 103
8.17.1 Friction 103
8.17.2 Wear 106
8.17.3 Interaction between friction, wear and the sealing process 107
8.18 Ultimate elongation 107
8.19 Tensile strength 107
8.20 Stress relaxation 107
8.21 Impact resilience 108
8.22 Radiation 108
8.23 Cross-section deforming force 108
8.24 Compression of an O-ring cross-section 109
8.25 Volume change 111
8.26 Tear resistance 111
8.27 Tensile set 111

9 Quality criteria 112
9.1 Quality 112
9.2 Evaluation criteria for O-Rings 112

10 Damage analysis 114
10.1 Requirements to be met by O-Rings 114
10.2 Gap extrusion – the effects of pressurisation 114
10.3 Failure due to compression set 115
10.4 Twisted O-Rings, spiral defects 116
10.5 Explosive decompression 117
10.6 Abrasion 117
10.7 Fitting errors 117

11 Appendix 118
11.1 Standards 118
11.1.1 O-Ring standards 118
11.1.4 Other standards 118
11.2 Size cross-reference 120
11.3 Media Compatibility Table 123
11.4 O-Ring Productseries on www.parker.com 149

Tel: +45 63 12 83 00 | Email: ps@hymatik.com | www.hymatik.com | Hvidkaervej 27a, DK-5250 Odense SV, Denmark

1 Introduction

1.1 O-Ring sealing

An O-Ring seal prevents undesirable loss of a fluid or gas. An O-Ring is a circular ring with a circular cross-section. The gland houses the O-Ring. The combination of these elements, O-Ring and gland, produce the O-Ring seal.
O-Rings are predominantly made from synthetic rubber. Their sealing effect is produced through axial and/or radial compression. As rubber compounds behave as incompressible liquids of great viscosity with high surface tension, O-Rings are deformed through system pressure (see figure 1.1). This also increases compression on the sealing surfaces.

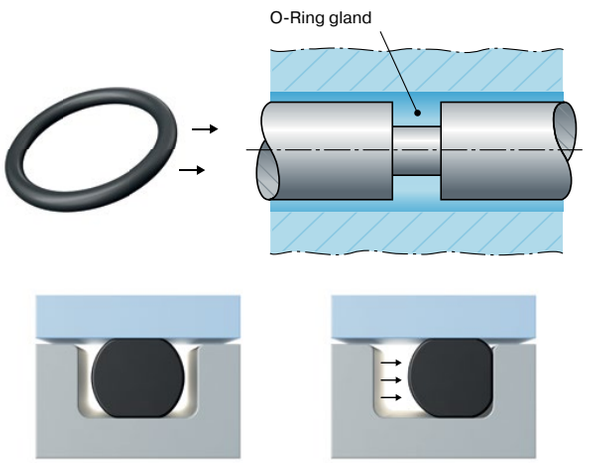

Fig. 1.1 O-Ring deformation through system pressure

Advantages of O-Rings
- Wide application range (pressures, tolerances, temperatures, media)
- Self-sealing and compression-supported sealing effect
- No retightening required
- No critical torque
- Space-saving design
- No groove splitting required
- Simple calculation of groove
- Easy handling and assembly
- O-Ring engineering designs are cost-effective

Static seal
A static seal is defined as a seal in which adjacent surfaces do not move relative to each other (with the exception of small movements due to fluid pressure).
Examples of static seals are: seals under a bolt head or rivet, seals in a pipe connection, seals under a lid or plug.
O-Rings are said to be "the best static seal ever developed". Perhaps the main strength of this claim is that the O-Ring is highly reliable. No retightening is required and there is no human error factor if the O-Ring is fitted at the appropriate sealing points when it is first installed and during overhaul.The O-Ring does not require a high loading torque to obtain a leak-free seal. Further information can be found in section 3.1.

Dynamic sealing
In dynamic applications, the parts to be sealed move relative to one another. The different types of movement are described as tranlational, oscillating or rotating. O-Rings installed on pistons or rods in hydraulic cylinders to provide reciprocal dynamic sealing are most effective when used for short hubs and relatively small diameters. For more information, see section 3.2.

1.2 O-ring compounds

When choosing an O-Ring compound, many factors must be taken into account, the main ones being pressure and temperature ranges and the medium to be sealed. A compound that is not affected by fuel may not be suitable for bottle-filling machines, as the material can, under certain conditions, have an effect on the taste and smell of the drink. A compound which is optimally suited for steam can be negatively influenced by alcohol or antifreeze in a vehicle's water cooling system. Considering the numerous requirements made on an O-Ring, the final choice of compound is at best an optimal compromise. Further detailed information can be found in section 6.

Tel: +45 63 12 83 00 | Email: ps@hymatik.com | www.hymatik.com | Hvidkaervej 27a, DK-5250 Odense SV, Denmark

2 Forms of installation

2.1 Definition of design

O-Rings can be used in static applications such as covers or pins. If the machine parts being sealed move relative to one another, the O-ring acts as a dynamic seal.

The seal type designs are defined as follows:
When a **female gland** is cut in the outside machine part, it is regarded as a "rod seal".
- When a **male gland** is cut in the inside machine part, it is regarded as a "piston seal".
- When there is **axial compression**, it is regarded as a "face seal".

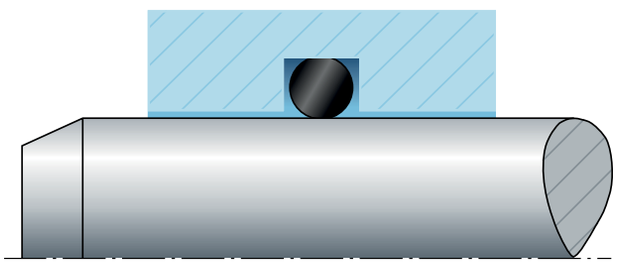

Fig. 2.1 Female gland ("rod seal"): O-Ring with radial compression

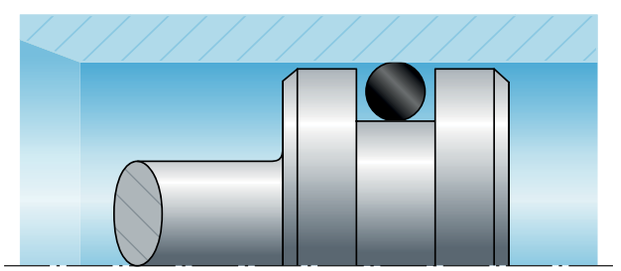

Fig. 2.2 Male gland ("piston seal"): O-Ring with radial compression

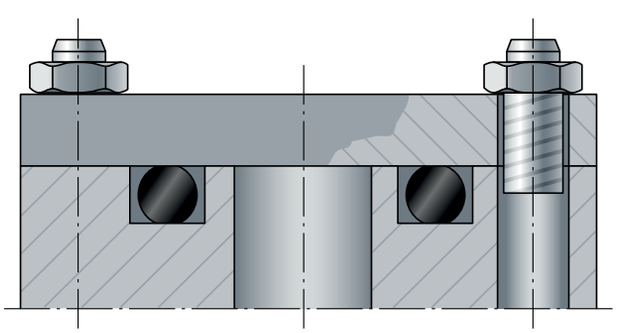

Fig. 2.3 Face seal: O-Ring deformed axially

2.2 Static seals

O-Rings are particularly suitable for use in static applications because the applied deformation produces a seal effect which increases with increasing system pressure. The effectiveness of the seal is influenced by both a correctly-designed gland and the choice of compound.
In all applications, it is correct to select an O-Ring with the **largest possible cross-section** allowed by the design constraints. In general it can be said that an O-Ring circumference should not be stretched more than 6 % nor compressed more than 1 to 3 % when installed (measured by the inner diameter of the O-Ring).
The hardness of an O-Ring is selected according to the applied pressure, the tolerances (and related gap widths) and the surface finish of the elements to be sealed.
The elastic elongation of metallic materials (e.g. lids, flanges, cylinder walls or screw joints) under pressure must be considered. Due to this, an oversized clearance gap can occur, which the O-Ring must bridge.
The type of sealing point also depends on the mechanical processing. Economic processing methods can necessitate higher tolerances and therefore larger clearance gaps. Back-up rings can be used to protect radially-deformed O-Rings against expected extrusion.

The Parbak® back-up ring size list gives the relevant continuous elastomer back-up rings suiting O-Ring sizes 2-004 to 2-475 (for more information, see section "Parbak® back-up rings"). For silicone compounds, the allowable gap size is 50 % of that normally allowed with other elastomer compounds, as these materials have very poor extrusion and tear resistance properties.
High pulsating pressure and the resulting relative movement of machine parts promote wear in an O-Ring. Additionally, elastic elongation of the individual components can result in a larger sealing gap. If signs of wear are found on a static seal, we recommend improving the surface finish or using Ultrathan® (polyurethane) O-Rings (see catalogue "Pneumatic Seals" or "Hydraulic Seals").

Tel: +45 63 12 83 00 | Email: ps@hymatik.com | www.hymatik.com | Hvidkaervej 27a, DK-5250 Odense SV, Denmark

2 Forms of installation

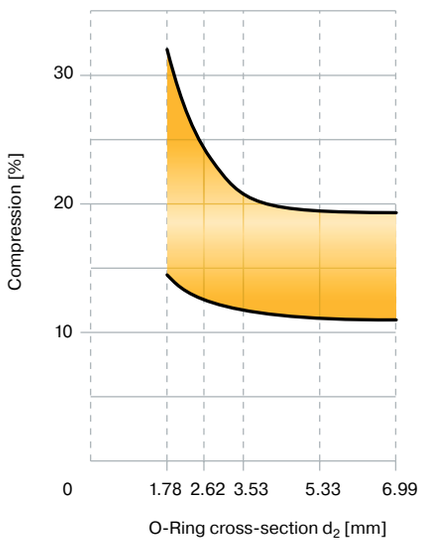

Fig. 2.4 Permissible compression plotted against cross-section d_2 – static seal

2.2.1 Static seals – radial

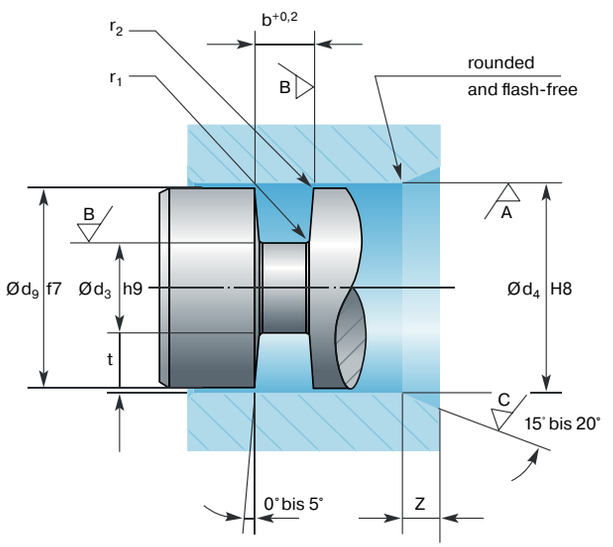

Fig. 2.5 Gland in inside element

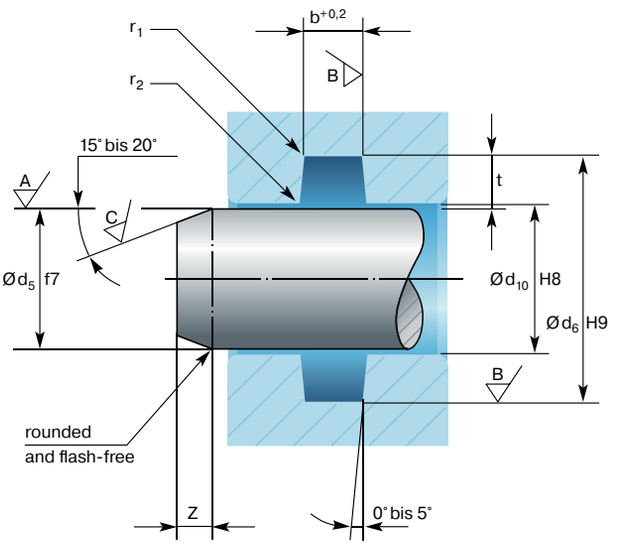

Fig. 2.6 Gland in outside element

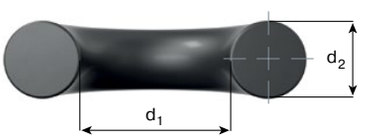

Fig. 2.7 Inner diameter d_1, cross-section d_2

d_2	$t^{1)}$	$b^{+0.20}$	z	r_1	r_2
1.50	1.10	1.90	1.5	0.2 - 0.4	0.1 - 0.3
1.78	**1.40**	**2.40**	**1.5**	0.2 - 0.4	0.1 - 0.3
2.00	1.50	2.60	1.5	0.2 - 0.4	0.1 - 0.3
2.50	2.00	3.20	1.5	0.2 - 0.4	0.1 - 0.3
2.62	**2.10**	**3.60**	**1.5**	0.2 - 0.4	0.1 - 0.3
3.00	2.30	3.90	2.0	0.4 - 0.8	0.1 - 0.3
3.53	**2.90**	**4.80**	**2.0**	0.4 - 0.8	0.1 - 0.3
4.00	3.25	5.20	2.0	0.4 - 0.8	0.1 - 0.3
5.00	4.10	6.50	3.0	0.4 - 0.8	0.1 - 0.3
5.33	**4.50**	**7.20**	**3.0**	0.4 - 0.8	0.1 - 0.3
6.00	5.00	7.80	3.0	0.4 - 0.8	0.1 - 0.3
6.99	**5.90**	**9.60**	**3.6**	0.8 - 1.2	0.1 - 0.3
8.00	6.80	10.40	4.0	0.8 - 1.2	0.1 - 0.3
9.00	7.70	11.70	4.5	0.8 - 1.2	0.1 - 0.3
10.00	8.70	13.00	4.5	0.8 - 1.2	0.1 - 0.3
12.00	10.60	15.60	4.5	0.8 - 1.2	0.1 - 0.3

[1] The tolerances are calculated from $d_3h9 + d_4H8$ or $d_5f7 + d_6H9$.
The DIN ISO 3601 sizes are preferable and shown here in bold.
Tab. 2.1 Gland dimensions - radial deformation

Tel: +45 63 12 83 00 | Email: ps@hymatik.com | www.hymatik.com | Hvidkaervej 27a, DK-5250 Odense SV, Denmark

2 Forms of installation

Surface	Pressure	Surface finish roughness, percentage contact area t_p > 50 % R_a [µm]	$R_{max.}$
A contact surface	non-pulsating	1.60	6.30
A contact surface	pulsating	0.80	3.20
B groove base and sides	non-pulsating	3.20	12.50
B groove base and sides	pulsating	1.60	6.30
C surface finish of lead-in edge chamfer	-	3.20	12.50

Tab. 2.2 Surface finish roughness – static seal

Design recommendations in section 3.

2.2.2 Static seals – axial

The O-Ring cross-section is deformed in an axial direction. As the O-ring makes a relative movement under pressure loading, it is important to observe the direction of pressure:

- If pressure acts from the inside, the O-Ring should touch the gland outer diameter (optimally compressed by 1 to 3 % of its circumference).
- If pressure acts from the outside, the O-Ring inner diameter should touch the inner diameter of the gland (stretched by up to 6 %).

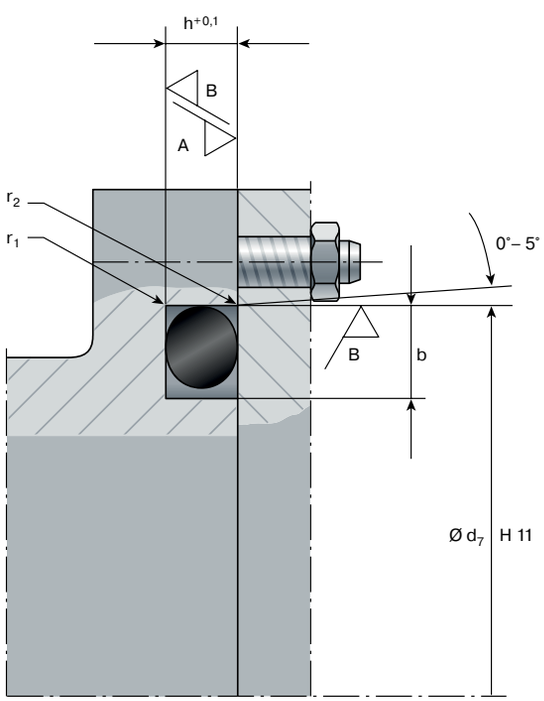

Fig. 2.8 Pressure from inside

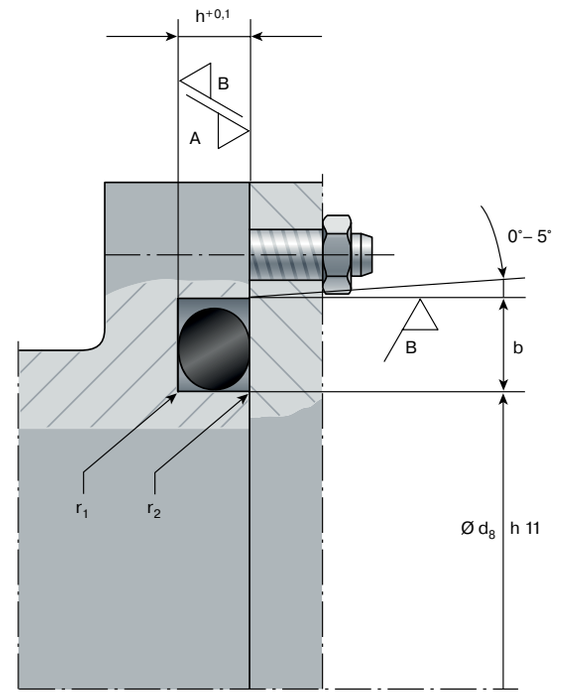

Fig. 2.9 Pressure from outside

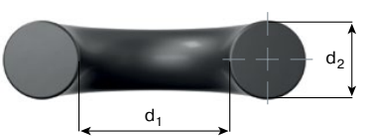

Fig. 2.10

d_2	$h^{+0.10}$	$b^{+0.20}$	r_1	r_2
1.50	1.10	1.90	0.20 - 0.40	0.20 - 0.40
1.78	**1.30**	**2.40**	0.20 - 0.40	0.20 - 0.40
2.00	1.50	2.60	0.20 - 0.40	0.20 - 0.40
2.50	2.00	3.20	0.20 - 0.40	0.20 - 0.40
2.62	**2.10**	**3.60**	0.20 - 0.40	0.20 - 0.40
3.00	2.30	3.90	0.40 - 0.80	0.20 - 0.40
3.53	**2.80**	**4.80**	0.40 - 0.80	0.20 - 0.40
4.00	3.25	5.20	0.40 - 0.80	0.20 - 0.40
5.00	4.00	6.50	0.40 - 0.80	0.20 - 0.40
5.33	**4.35**	**7.20**	0.40 - 0.80	0.20 - 0.40
6.00	5.00	7.80	0.80 - 1.20	0.20 - 0.40
6.99	**5.75**	**9.60**	0.80 - 1.20	0.20 - 0.40
8.00	6.80	10.40	0.80 - 1.20	0.20 - 0.40
9.00	7.70	11.70	0.80 - 1.20	0.20 - 0.40
10.00	8.70	13.00	0.80 - 1.20	0.20 - 0.40
12.00	10.60	15.60	0.80 - 1.20	0.20 - 0.40

The DIN ISO 3601 sizes are preferable and shown here in bold.

Tab. 2.3 Rectangular gland dimensions – axial deformation

Tel: +45 63 12 83 00 | Email: ps@hymatik.com | www.hymatik.com | Hvidkaervej 27a, DK-5250 Odense SV, Denmark

Surface		Pressure	Surface finish roughness, percentage contact area t_p > 50 %	
			R_a [µm]	$R_{max.}$
A	contact surface	non-pulsating	1.60	6.30
A	contact surface	pulsating	0.80	3.20
B	groove base and sides	non-pulsating	3.20	12.50
B	groove base and sides	pulsating	1.60	6.30

Tab. 2.4 Surface finish roughness – static seal

Design recommendations in section 3.

2.2.3 Static seals – dovetail groove

The dovetail groove shape is used where it is necessary to keep an O-Ring in its position, e.g. during surface work, when opening and closing tools or machines where otherwise the O-Ring would drop out of the gland. The machining of the gland is difficult and costly.

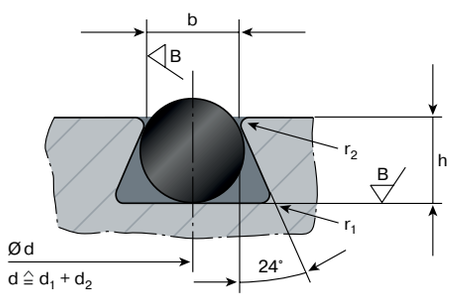

d = gland mean diameter

The gland width is measured before deburring the edges.

Radius r_2 is selected so that the O-Ring is not damaged during assembly and cannot be trapped in the gap under high pressure.

Fig. 2.11 Dovetail gland

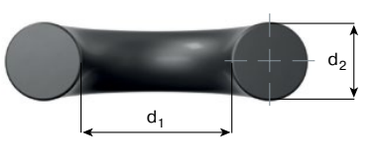

Fig. 2.12 Inner diameter d_1, cross-section d_2

d_2	h	$b^{+0.10}$	r_2	r_1
1.78	1.25 $^{+0.05}$	1.40	0.10 - 0.30	0.4 - 0.6
2.62	2.05 $^{+0.05}$	2.10	0.10 - 0.30	0.6 - 0.8
3.53	2.80 $^{+0.05}$	2.85	0.10 - 0.30	0.8 - 1.0
5.33	4.55 $^{+0.08}$	4.35	0.10 - 0.30	1.0 - 1.3
6.99	5.85 $^{+0.08}$	5.85	0.10 - 0.30	1.3 - 1.6

Tab. 2.5 Dovetail gland dimensions

Surface		Pressure	Surface finish roughness, percentage contact area t_p > 50 %	
			R_a [µm]	$R_{max.}$
A	contact surface	non-pulsating	1.60	6.30
A	contact surface	pulsating	0.80	3.20
B	groove base and sides	non-pulsating	3.20	12.50
B	groove base and sides	pulsating	1.60	6.30

Tab. 2.6 Surface finish roughness – static seal

2.3 Dynamic seals

The number of parameters affecting the sealing properties and service life of dynamic or reciprocating seals is far greater than for static seals. Oscillating and rotating seals as well as reciprocating seals in hycraulics and pneumatics belong to this category.
Due to frictional resistance the deformation of the O-ring cross-section is smaller than in the case of static seals.
O-rings in hydraulic and pneumatic applications allow small glands. In these cases, O-rings are used best for short strokes and small diameters.
O-rings in long stroke applications with relatively large diameters can also be used successfully if correctly fitted. However, it is necessary to consider all factors which influence the sealing function as early as in the design stage. The compound hardness is selected according to the applied pressure and other mechanical requirements. The most frequently used O-ring hardness is between 70 and 80 Shore A.
Should the risk of extrusion exist (e.g. where dynamic seals are subject to high pressure) two back-up rings should be fitted.
The following factors should be considered for new designs:

- The chemical effect of the contact medium on the elastomer
- The effect of all working conditions on the the seal, such as a potential high temperature range or changes from high to low temperatures
- The direction of applied pressure: does the piston move against the pressure and favour extrusion if no back-up ring is acting against it or does the seal move away from the pressure?
- A potential eccentricity of machine elements that could cause a one-sided stretching of the sealing gap, which would increase the risk of extrusion
- The resistance of a material to extrusion could decrease with increasing friction-induced temperature
- Wear particles from metal parts cause scoring and leakage when contacting the sealing area
- Foreign material can enter the system and cause leakage when a shaft returns into a cylinder carrying surface particles with it

Tel: +45 63 12 83 00 | Email: ps@hymatik.com | www.hymatik.com | Hvidkaervej 27a, DK-5250 Odense SV, Denmark

2 Forms of installation

- Pressure peaks can be markedly higher then system pressure (use back-up ring)
- A fine lubricating film can remain on the sealing surface even once the technical sealing-point has been reached

Reciprocating type seals and their gland design can be subdivided into hydraulic and pneumatic applications.

2.3.1 Dynamic seals – hydraulics

In hydraulics, O-Rings are used in piston and rod seals. They provide good results over a wide range of pressures and can be used with back-up rings.
The average deformation of the cross-section is between 10 and 15 %. It is essential not to go below the minimal tolerance of 8 %, as calculated below on the basis of all tolerances:

$$\frac{(d_{2min} - t_{max}) \times 100}{d_{2min}} \geq 8\ (\%)$$

d_{2min} = min. cross-section
t_{max} = max. gland depth

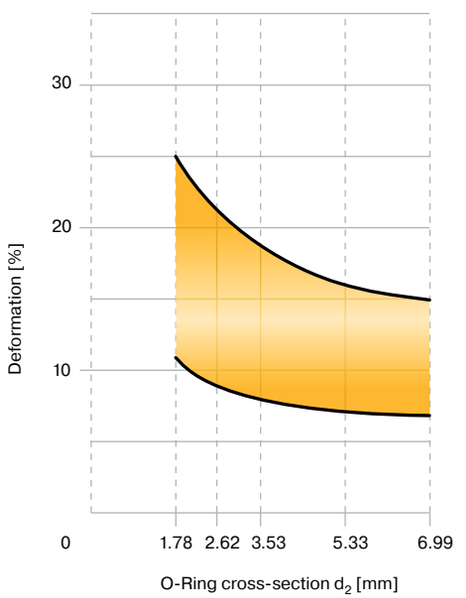

Fig. 2.13 Amount of allowable deformation dependent upon cross-section d_2 – reciprocating seal hydraulic

When used as a piston seal, O-Rings can be compressed by 1 to 3 % of their circumference. The amount of force required to compress the circumference depends on the O-Ring inner diameter and decreases with increasing inner diameter.
O-Rings may be stretched by up to 6 % when assembled in a piston groove.
Compounds featuring highest wear resistance should be selected. The compound should not shrink in the medium nor be subject to high swelling which increases friction and reduces extrusion resistance.
Normally, a compound hardness from 70 to 80 Shore A is recommended. In this range, a compromise between friction and wear is attained. Softer O-Rings have a higher wear rate, harder O-Rings feature higher friction at pressures up to 150 bar. At high pressures there is a risk of extrusion. With large gaps and higher temperatures, back-up rings should be used.

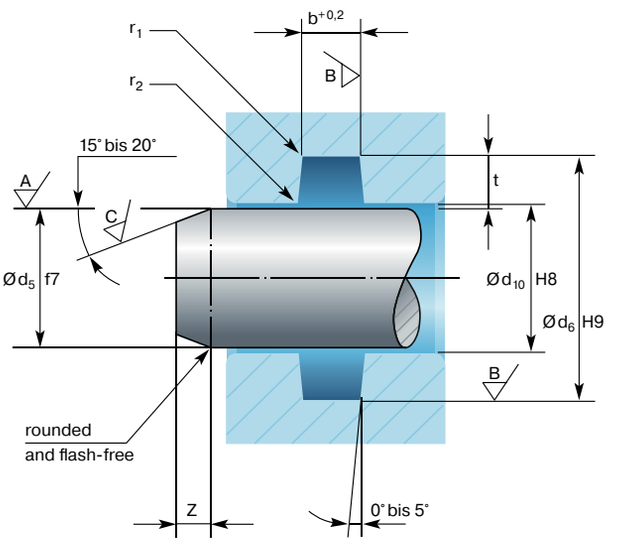

Fig. 2.14 Rod seal – hydraulic and pneumatic

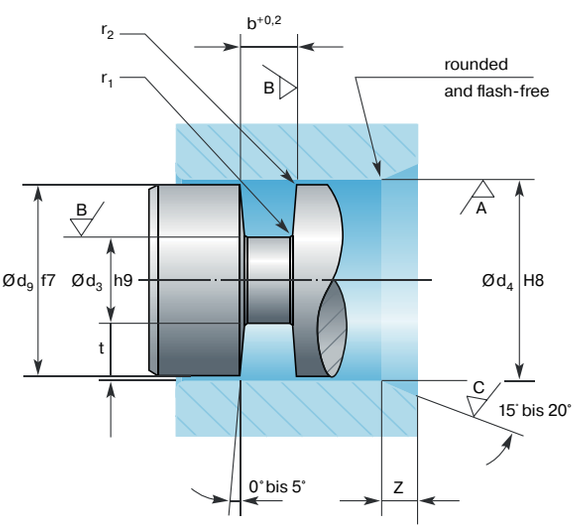

Fig. 2.15 Piston seal – hydraulic and pneumatic

Tel: +45 63 12 83 00 | Email: ps@hymatik.com | www.hymatik.com | Hvidkaervej 27a, DK-5250 Odense SV, Denmark

2 Forms of installation

d_2	$t^{1)}$	$b^{+0.20}$	z	r_1	r_2
1.50	1.30	1.90	1.50	0.20 - 0.40	0.10 - 0.30
1.78	**1.45**	**2.40**	1.50	0.20 - 0.40	0.10 - 0.30
2.00	1.70	2.60	1.50	0.20 - 0.40	0.10 - 0.30
2.50	2.10	3.30	1.50	0.20 - 0.40	0.10 - 0.30
2.62	**2.20**	**3.60**	1.50	0.20 - 0.40	0.10 - 0.30
3.00	2.60	3.90	1.80	0.40 - 0.80	0.10 - 0.30
3.53	**3.05**	**4.80**	1.80	0.40 - 0.80	0.10 - 0.30
4.00	3.50	5.30	1.80	0.40 - 0.80	0.10 - 0.30
5.00	4.45	6.70	2.70	0.40 - 0.80	0.10 - 0.30
5.33	**4.65**	**7.10**	2.70	0.40 - 0.80	0.10 - 0.30
6.00	5.40	8.00	3.60	0.40 - 0.80	0.10 - 0.30
6.99	**6.20**	**9.50**	3.60	0.40 - 0.80	0.10 - 0.30

[1] The tolerances are calculated from $d_3h9 + d_4H8$ or $d_5f7 + d_6H9$.

The DIN ISO 3601 recommendations are preferred and are shown here in bold.

Tab. 2.7 Gland dimensions – dynamic hydraulic seal

Surface	Surface finish roughness, percentage contact area $t_p > 50$ % R_a [µm]	$R_{max.}$
A contact surface	0.40	1.60
B groove base and sides	1.60	6.30
C surface finish of lead-in edge chamfer	3.20	12.50

Tab. 2.8 Surface-finish roughness – reciprocating seal – hydraulic

2.3.2 Dynamic seals – pneumatic

Pneumatic systems are found in a wide range of applications today. The following advantages have been driving the use of new systems as well as the replacement of existing hydraulic systems:

- Non-flammable pressure medium
- Lower weight
- Leakage is less critical, therefore less damage to environment
- The pressure medium air does not change at high temperatures
- Competitive costs

The average compression of the O-ring cross-section is reduced in comparison with hydraulic applications to minimise wear.

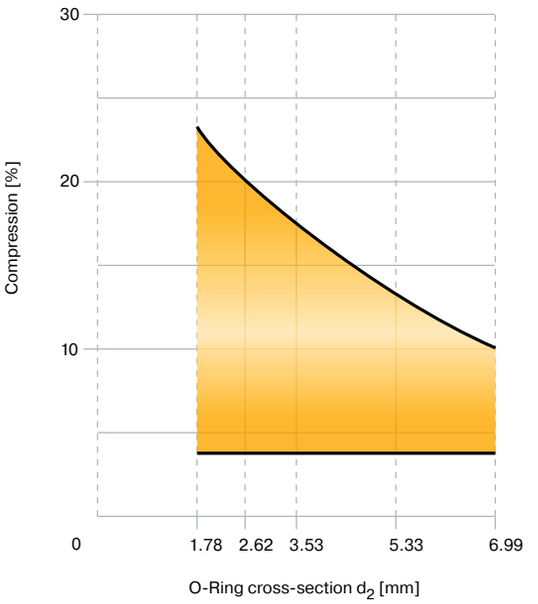

Fig. 2.16 Allowable compression dependent upon cross-section d_2 – reciprocating seal pneumatic

Minimum compression of the O-Ring cross-section is normally between 4 and 7 % and includes all tolerances.

$$\frac{(d_{2min} - t_{max}) \times 100}{d_{2min}} \geq 4\ (\%)$$

d_{2min} = smallest cross-section
t_{max} = maximum gland depth

O-rings as rod seals allow compression by 1 % to 3 % of their circumference.
As piston seals, they can stretch to 6 % of their inner diameter.
In addition to standard materials, a wide range of special compounds with improved friction behaviour are available.
These compounds can be discussed with our application engineering department.
Parker recommends a compound hardness between 70 and 80 Shore A.

d_2	$t^{1)}$	$b^{+0.20}$	z	r_1	r_2
1.78	**1.55**	**2.30**	1.50	0.20 - 0.40	0.10 - 0.30
2.62	**2.35**	**3.10**	1.50	0.20 - 0.40	0.10 - 0.30
3.53	**3.15**	**4.20**	1.80	0.40 - 1.20	0.10 - 0.30
5.33	**4.85**	**6.40**	2.70	0.40 - 1.20	0.10 - 0.30
6.99	**6.40**	**8.40**	3.60	0.40 - 1.20	0.10 - 0.30

[1] The tolerances are calculated from $d_3h9 + d_4H8$ or $d_5f7 + d_6H9$.

Tab. 2.9 Gland dimensions – pneumatic

Tel: +45 63 12 83 00 | Email: ps@hymatik.com | www.hymatik.com | Hvidkaervej 27a, DK-5250 Odense SV, Denmark

2 Forms of installation

Surface	Surface finish roughness, percentage contact area t_p > 50 %	
	R_a [µm]	$R_{max.}$
A contact surface	0.40	1.60
B groove base and sides	1.60	6.30
C surface finish of lead-in edge chamfer	3.20	12.50

Tab. 2.10 Pneumatic piston – floating assembly

Pneumatic piston – floating assembly
Pneumatic pistons are typically designed with floating O-rings. The cross-section is not compressed, which reduces friction. As a result, the sealed piston moves with ease and the O-ring is subjected to minimal wear.
The outer diameter of the O-ring is a little larger than the cylinder's inner diameter to ensure the sealing function.
The O-ring's inner diameter d_1 should not touch the groove's inner diameter. The gland depth must be larger than the O-ring cross-section.
On pressurisation, a certain amount of leakage can occur until the O-ring is in contact with the surface to be sealed.
Parker recommends a compound hardness between 70 and 80 Shore A. Standard compounds are used in the pressure range up to 16 bar and with temperatures up to 80 °C.
Please contact our application engineering department for information on special compounds and assistance with selecting materials.

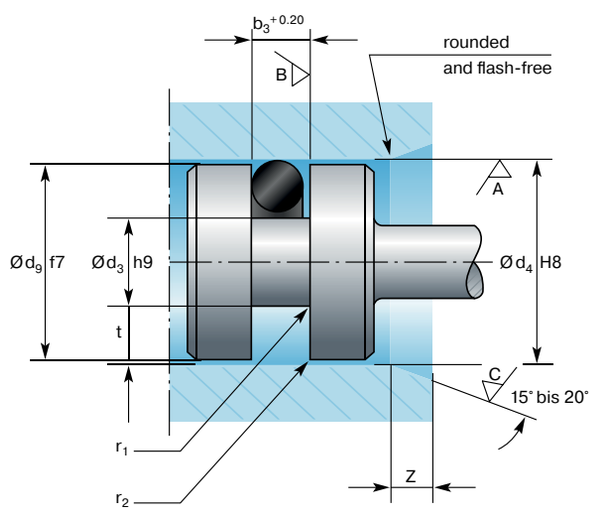

Fig. 2.17

d_2	$t^{1)}$	$b_{3\ +0.2}$	z	r_1	r_2
1.78	**2.00**	**2.00**	1.50	0.20 - 0.40	0.10 - 0.30
2.62	**2.90**	**3.00**	1.50	0.20 - 0.40	0.10 - 0.30
3.53	**3.80**	**4.00**	1.80	0.40 - 1.20	0.10 - 0.30
5.33	**5.60**	**6.00**	2.70	0.40 - 1.20	0.10 - 0.30
6.99	**7.30**	**8.00**	3.60	0.40 - 1.20	0.10 - 0.30

1) The tolerance is a combination of $d_3h9 + d_4H8$

Tab. 2.11 Gland dimensions for floating O-Ring – pneumatic piston

Surface	Surface finish roughness, percentage contact area t_p > 50 %	
	R_a [µm]	$R_{max.}$
A contact surface	0.40	1.60
B groove base and sides	1.60	6.30
C surface finish of lead-in edge chamfer	3.20	12.50

Tab. 2.12 Surface roughness – floating O-ring

2.4 Drive belts

O-rings can be used as low power transmission elements. They are not only a cost-efficient solution but also offer many advantages for this application:
- Simple installation
- Consistent tensile forces
- Flexible uses
- Due to the elastic properties of the O-ring compounds there is no need to use belt tensioners
- Readily available in standard compounds and sizes
- Larger positioning tolerances of the pulleys can be bridged

An O-ring compound is selected for minimum stretch relaxation (tensile set) and maximum dynamic properties.
The choice of elastomer depends on the environment:
- Contact medium, e.g. ozone, oil, grease
- Temperatures

The general requirements are:
- Good ageing resistance
- Wear resistance
- Relatively low tendency to return to original shape under tension and temperature (see "Gough-Joule effect", section 8.13)
- Good bending flexibility

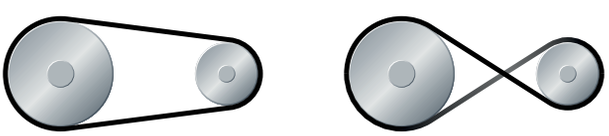

Fig. 2.18 Open design (left), crossed design (right)

Tel: +45 63 12 83 00 | Email: ps@hymatik.com | www.hymatik.com | Hvidkaervej 27a, DK-5250 Odense SV, Denmark

2 Forms of installation

Compounds for drive belts
The following compounds have proven themselves under the above conditions:

E0540-80
- Ethylene propylene diene rubber (EPDM)
- Temperature resistant up to +80 °C (max +100 °C)
- EPDM is not resistant to mineral oil and grease
- If contact with lubricant from bearing housing or machine parts cannot be avoided, silicone oil and grease should be used

C0557-70
- Chloroprene rubber (CR)
- Temperature resistant up to approx. +80 °C
- CR is compatible with mineral oils and greases
- The dynamic properties are not as good as those of EPDM and PUR. The stress relaxation of CR is as good as that of EPDM.

S0604-70
- Silicone rubber (VMQ)
- Temperature resistant to approx. +100 °C (maximum to +150 °C)
- VMQ is normally used where high temperatures apply
- Tensile strength and wear resistance are poor compared to other compounds

P5008
- Thermoplastic Polyurethane (TPU)
- Temperature resistant up to approx. +55 °C (dependent on relative humidity)
- PUR is noted for its firmness, wear resistance and lifetime. Because of this, PUR can be applied in demanding working conditions or when transferring larger loads.

The following table compares drive belt elastomers according to their properties (using values obtained from tests with the O-Ring size 2-153, 88.6 × 2.6 mm).

Dynamic tensile relaxation:
Testing period: 72 h
Testing temp.: room temperature
Drive pulley: 15.5 mm dia
Speed: 1740 rpm
Tension: 0.83 N/mm²
Loading: Momentum of the driven pulley (cast iron) 66.5 mm dia in a test cycle taking 3 minutes with 15 seconds to stand still.

Static tensile relaxation:
Testing period: 48 h
Temperature: see table
Pre-tensioning: 0.83 N/mm2 between two pulleys with 12.7 mm dia.

Base elastomer	Parker compound	Hardness [Shore A]	Dynamic tensile relaxation [1]	Static tensile relaxation [1] Temperature 24 °C	65 °C	80 °C	Dynamic behaviour [2]	Operating temperature	Compatibility with [2] Mineral oil and grease	Silicone oil and grease	Water	Ozone	Abrasion
EPDM	E0540-80	80±5	13 %	14 %	18 %	20 %	+	80 (100)		++	++	++	+
CR	C0557-70	70±5	14 %	14 %	19 %	22 %	0	80	+	++	+	+	+
VMQ	S0604-70	70±5	21 %	2 %	5 %	2 %	+	100 (150)	0	0	+	++	0
TPU	P5008	94±5	19 %	21 %	29 %	36 %	++	55	++	++	0/	++	++

[1] (Initial tension 0.83 N/mm²)

[2] very good: ++, good: +, average: 0, limited use: 0/, not suitable:

Tab. 2.13 Comparison of elastomeric drive belt properties

Design information
- Direct contact with fluids should be avoided, as it may cause slippage. The Medium Compatibility Table (see appendix) details contact medium compatibility with different elastomers.
- The minimum pulley diameter is D_2 mm = 6 × d_2 (cross-section).
- The O-Ring inner diameter d_1 can stretch to a maximum of 15 % (average elongation between 8 and 12 %).
- Tension when fitted appr 0.6 to 1.0 N/mm².
- Cross-section d_2 should be greater or equal then 2.62 mm.

Calculation of a drive belt: open design
Abbreviations:
C: Center line distance of pulleys (mm)
D_1: Diameter of driven pulley (mm)
D_2: Diameter of drive pulley (mm)
S: Elongation as a decimal (e.g. 10 % = 0.1)
d_1: O-Ring inner diameter (mm)
d_2: O-Ring cross-section (mm)
L: Length of drive belt (mm)
B: Calculation factor

Tel: +45 63 12 83 00 | Email: ps@hymatik.com | www.hymatik.com | Hvidkaervej 27a, DK-5250 Odense SV, Denmark

2 Forms of installation

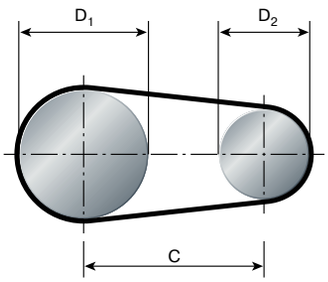

Fig. 2.19 Open design

1) Calculation of O-Ring size d_1:
known:
D_1 / D_2: Diameter of pulleys
C: Centre line distance of pulleys
S: Elongation as a decimal (e.g. 10 % = 0.1)

a) Calculation of drive belt length L:

$$L = 2\,C + 1.57 \times (D_1 + D_2) + \frac{(D_1 - D_2)^2}{4C}$$

b) Calculation of O-Ring inside diameter d_1:

$$d_1 = \frac{L}{3.14 \times (1.0 + S)}$$

c) O-Ring is selected according to the O-ring size list. If a size falls between two sizes given in the table, then the smaller size should be taken.

2) Calculation of elongation S:
known:
d_1: Inside diameter of O-ring
C: Centre line distance of pulleys
D_1 / D_2: Diameter of pulleys

a) Calculation of drive belt L: (see 1a)

b) Calculation of elongation S as a decimal:

$$S = \frac{L}{3.14 \times d_1} - 1$$

3) Calculation of centre line distance C of pulleys:
known:
d_1: Inside diameter of O-Ring
S: Elongation as a decimal (e.g. 10 % = 0.10)
D_1 / D_2: Diameters of pulleys

a) Calculation of factor B:

$$B = 3.14 \times d_1 \times (S + 1) - 1.57 \times (D_1 + D_2)$$

b) Thereafter calculation of centre line distance C:

$$C = \frac{B + \sqrt{B^2 - (D_1 + D_2)^2}}{4}$$

Crossed design
Abbreviations:
C: Center line distance of pulleys [mm]
D_1: Diameter of driven pulley [mm]
D_2: Diameter of drive pulley [mm]
S: Elongation as a decimal (e.g. 10 % = 0.1)
d_1: O-Ring inner diameter [mm]
d_2: O-Ring cross-section [mm]
L: Length of drive belt [mm]
B: Calculation factor

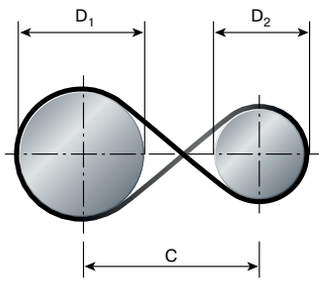

Fig. 2.20 Crossed design

1) Calculation of O-Ring size d_1:
known:
D_1 / D_2: Diameter of pulleys
C: Centre line distance of pulleys
S: Elongation as a decimal (e.g. 10 % = 0.1)

a) Calculation of drive belt length L:

$$L = 2\,C + 1.57 \times (D_1 + D_2) + \frac{(D_1 - D_2)^2}{4C}$$

b) Calculation of O-Ring inside diameter d_1:

$$d_1 = \frac{L}{3.14 \times (1.0 + S)}$$

c) O-ring is selected according to the O-ring size list. If a size falls between two sizes given in the table, then the smaller size should be taken.

2) Calculation of elongation S:
known:
d_1: Inside diameter of O-ring
C: Centre line distance of pulleys
D_1 / D_2: Diameter of pulleys

a) Calculation of drive belt length L: (see 1a)

b) Calculation of elongation S as a decimal:

$$S = \frac{L}{3.14 \times d_1} - 1$$

3) Calculation of centre line distance C of pulleys:
known:
d_1: Inside diameter of O-Ring
S: Elongation as a decimal (e.g. 10 % = 0.10)

Tel: +45 63 12 83 00 | Email: ps@hymatik.com | www.hymatik.com | Hvidkaervej 27a, DK-5250 Odense SV, Denmark

D_1 / D_2: Diameters of pulleys

a) Calculation of factor B:
$B = 3.14 \times d_1 \times (S + 1) - 1.57 \times (D_1 + D_2)$

b) Thereafter calculation of centre line distance C:

$$C = \frac{B + \sqrt{B^2 - (D_1 - D_2)^2}}{4}$$

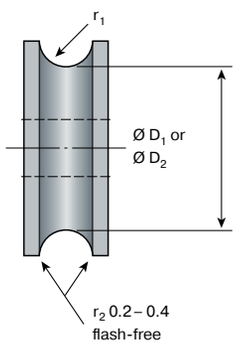

Fig. 2.21 Pulley gland radius

d_2	r_1
2,62	$1,25^{+0,10}$
3,53	$1,70^{+0,10}$
5,33	$2,60^{+0,10}$
6,99	$3,50^{+0,15}$

Tab. 2.14

For other cross-sections d_2:
$r_1 = 0.49 \times d_2$

Surface roughness:
R_{max} < 6.3 µm
R_a < 1.6 µm

2.5 Design and assembly instructions

Leak-free seals are achieved when proper sealing material is selected in the right sizes and sufficiently deformed. Correct deformation depends on observance of machine element tolerances and surface finishes. In practical terms all factors influencing the seal must be considered. Failures due to careless design can lead to reworking, increased servicing, disassembly, downtime or premature maintenance and other additional costs.

2.5.1 Chamfers

To facilitate the assembly of machine parts, and to prevent damaging the seals, chamfers are necessary on all leading edges. All edges must be free from burrs and sharp edges bevelled.

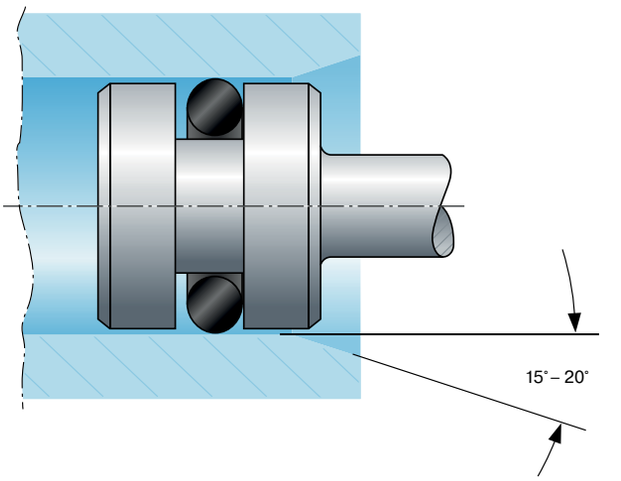

Fig. 2.22 Assembly example of piston

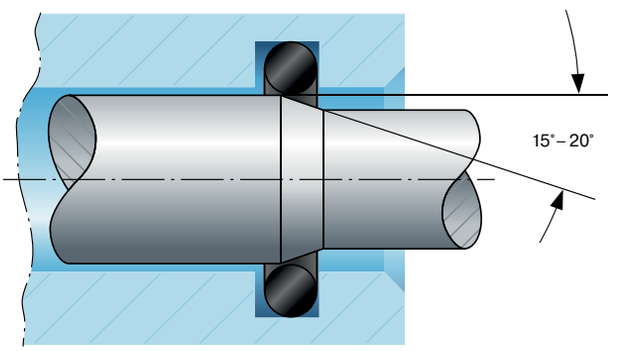

Fig. 2.23 Assembly example of rod

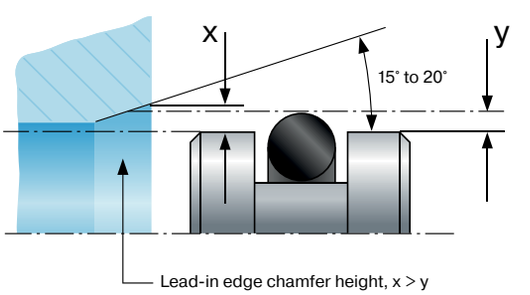

Fig. 2.24 The diagram shows the leading edge chamfer and an O-Ring before compression. Dimension x should be greater than dimension y to ensure a trouble-free assembly operation.

Tel: +45 63 12 83 00 | Email: ps@hymatik.com | www.hymatik.com | Hvidkaervej 27a, DK-5250 Odense SV, Denmark

2 Forms of installation

2.5.2 Traversing of cross drilled ports

An O-Ring can be sheared when a spool or rod moves in a bore broken by cross drilled ports. The deformed O-Ring returns to its original round cross-section as it enters the port and is sheared as it leaves the drilled area. To avoid this, connection holes should be repositioned.

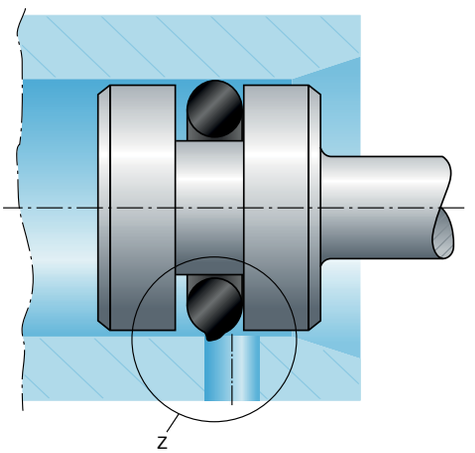

Fig. 2.25

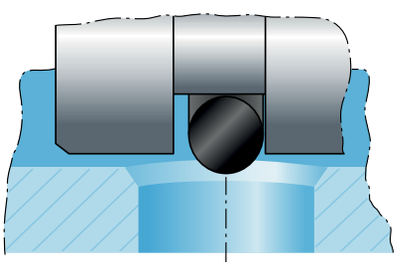

Fig. 2.26 If repositioning should not be possible, an internal chamfer is recommended.

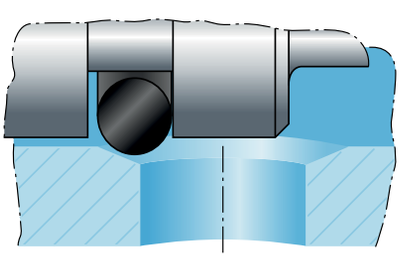

Fig. 2.27 A balancing groove in the area of the bore is the best solution. The O-Ring can relax and is guided through the lead-in and run-out chamfer.

2.5.3 Impurities and cleaning materials

Lack of cleanliness of O-Ring glands leads to leakage. To ensure protection from foreign particles of sealing faces during operation, it is necessary to use filters or to plan maintenance cycles.

Cleaning materials must be compatible with the elastomer. Grease used to ease assembly must also be compatible.

2.5.4 Elongation

O-Rings or back-up rings can be stretched during assembly no more than 50 % of their inner diameters. It is easy to exceed this value with smaller inner diameters, as the smaller the diameter, the sooner the stretching percentage can reach a critical value.
It therefore is important to ensure that the stretch remains inferior to ultimate elongation given in compound data sheets. If an O-Ring is stretched to near its elastic limit it will return to its original size after a short delay.

2.5.5 Rolling

O-Rings of large inner diameters and small cross-sections tend to roll during assembly. An O-Ring rolled during fitting can lead to spiral failure (see section “O-Ring failure”) or tend to leak.

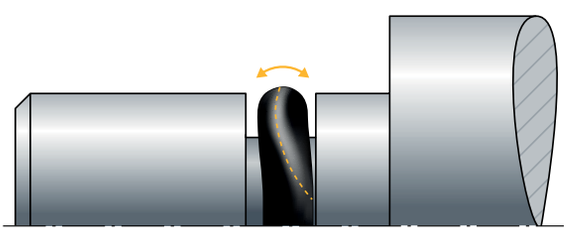

Fig. 2.28 O-Ring fitted rolled

2.5.6 Sharp edges

O-Rings should not be drawn over sharp edges. Threads, slits, bores, glands, splines, etc. must be removed or covered. Fitting aids assist assembly and avoid sharp edges.

Tel: +45 63 12 83 00 | Email: ps@hymatik.com | www.hymatik.com | Hvidkaervej 27a, DK-5250 Odense SV, Denmark

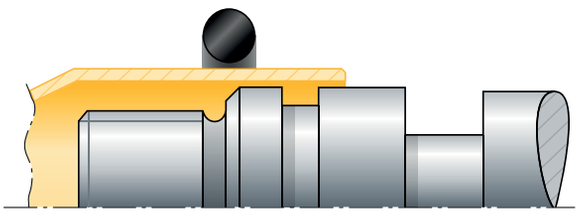

Fig. 2.29 Use of a fitting aid

2.5.7 Fitting aids

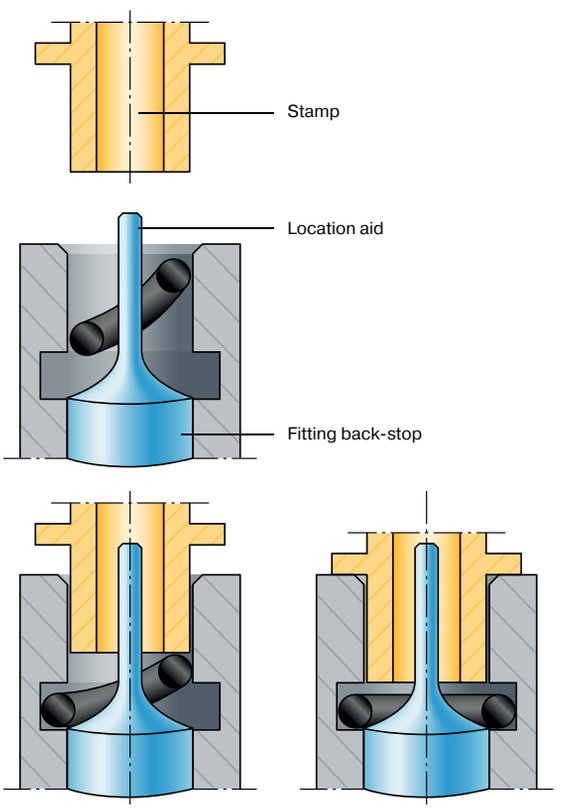

Fig. 2.30 Use of a stamp and a location aid

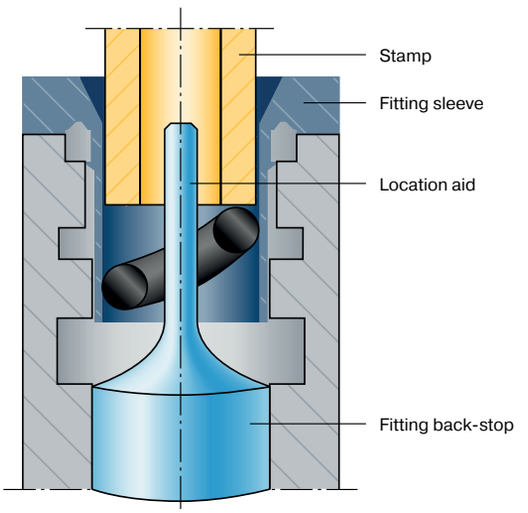

Fig. 2.31 Fitting aid is supplemented by a sleeve to protect the seal from sharp edges.

Tel: +45 63 12 83 00 | Email: ps@hymatik.com | www.hymatik.com | Hvidkaervej 27a, DK-5250 Odense SV, Denmark

3 Design recommendations

3.1 Static seals

3.1.1 Compression and design dimensions

Piston seal – radial compression
O-Ring assembly in inside element

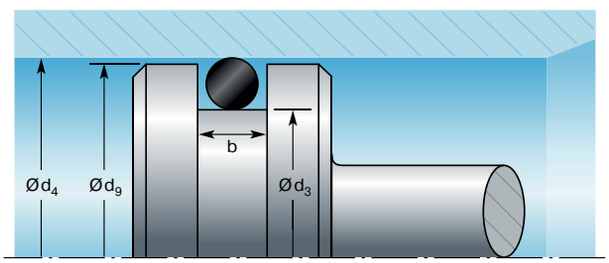

Fig. 3.1 Piston seal – radial compression

Rod seal – radial compression
O-Ring assembly in outside element

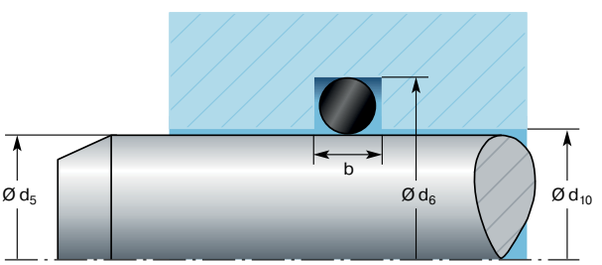

Fig. 3.2 Rod seal – radial compression

Flange seal – axial compression
Pressure from inside: O-Ring outside diameter must be compressed

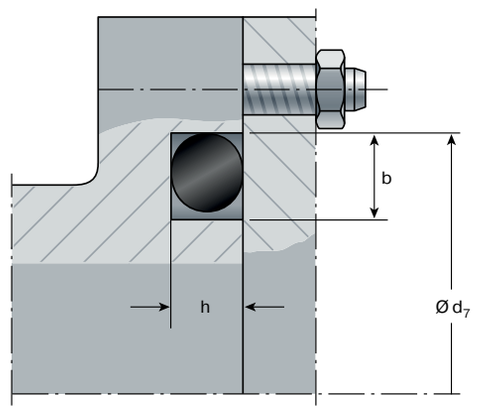

Fig. 3.3 Flange seal – axial compression

Pressure from outside: O-Ring inside diameter must be stretched

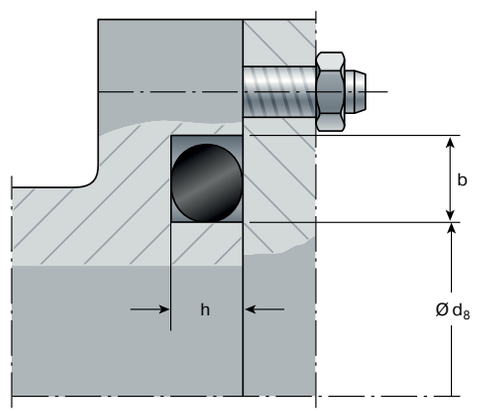

Fig. 3.4 Flange seal – axial deformation

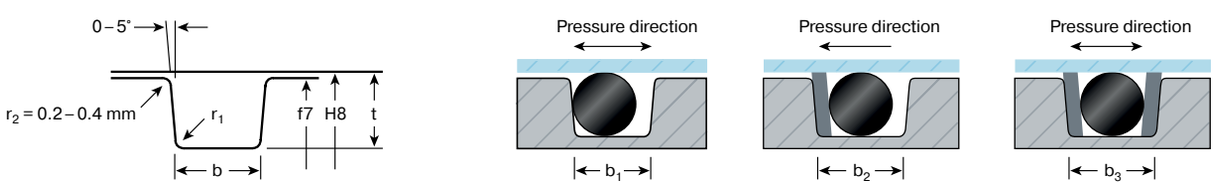

Cross-section d_2	Gland depth t	Compression	Compression	Groove width b_1 without anti-extrusion ring	Groove width b_2 one anti-extrusion ring	Groove width b_3 two anti-extrusion rings	Radius r_1
[mm]	[mm]	[mm]	[%]	[mm]	[mm]	[mm]	[mm]
1.78 ±0.08	1.40	0.26 - 0.58	15 - 31	2.40 - 2.60	3.50 - 3.70	4.60 - 4.80	0.20 - 0.40
2.62 ±0.09	2.20	0.26 - 0.64	10 - 23	3.60 - 3.80	4.70 - 4.90	5.80 - 6.00	0.20 - 0.40
3.53 ±0.10	2.90	0.40 - 0.85	11 - 23	4.80 - 5.00	5.80 - 6.00	6.80 - 7.00	0.40 - 0.80
5.33 ±0.13	4.50	0.57 - 1.08	11 - 20	7.20 - 7.40	8.70 - 8.90	10.20 - 10.40	0.40 - 0.80
6.99 ±0.15	5.90	0.80 - 1.35	11 - 19	9.60 - 9.80	12.00 - 12.20	14.40 - 10.60	0.40 - 0.80

Tab. 3.1 Design dimensions for O-Rings – static seal

Tel: +45 63 12 83 00 | Email: ps@hymatik.com | www.hymatik.com | Hvidkaervej 27a, DK-5250 Odense SV, Denmark

3 Design recommendations

3.1.2 Piston seal static

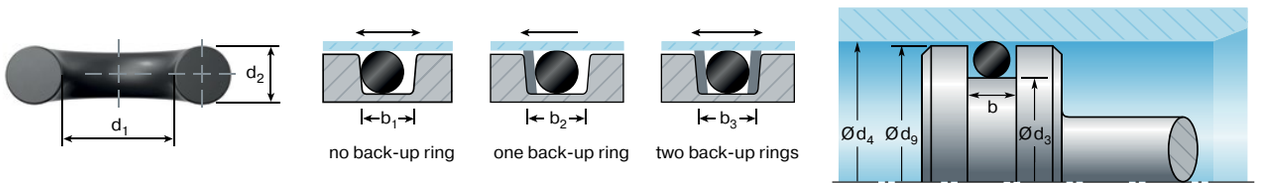

Fig. 3.5

Parker no.	d_1	d_2	b_1 0.25 0	b_2 0.25 0	b_3 0.25 0	d_4/d_9 H8/f7	d_3	Tol.
2-004	1.78	1.78	2.8	4.2	5.6	4.52	1.93	h6
2-005	2.57	1.78	2.8	4.2	5.6	5.31	2.72	h6
2-006	2.9	1.78	3.5	4.6	5.6	5.65	3.05	h6
2-007	3.68	1.78	2.8	4.2	5.6	6.43	3.84	h6
2-008	4.47	1.78	2.8	4.2	5.6	7.22	4.63	h6
2-009	5.28	1.78	2.8	4.2	5.6	8.04	5.45	h6
2-010	6.07	1.78	2.8	4.2	5.6	8.83	6.24	h6
2-011	7.65	1.78	2.8	4.2	5.6	10.42	7.83	h6
2-012	9.25	1.78	2.8	4.2	5.6	12.17	9.59	h8
2-013	10.82	1.78	2.8	4.2	5.6	13.77	11.2	h8
2-014	12.42	1.78	2.8	4.2	5.6	15.4	12.83	h8
2-015	14	1.78	2.8	4.2	5.6	17.06	14.49	h8
2-016	15.6	1.78	2.8	4.2	5.6	18.75	16.17	h8
2-017	17.17	1.78	2.8	4.2	5.6	20.35	17.78	h8
2-018	18.77	1.78	2.8	4.2	5.6	21.98	19.41	h8
2-019	20.35	1.78	2.8	4.2	5.6	23.59	21.12	h9
2-020	21.95	1.78	2.8	4.2	5.6	25.22	22.75	h9
2-021	23.52	1.78	2.8	4.2	5.6	26.83	24.36	h9
2-022	25.12	1.78	2.8	4.2	5.6	28.48	26.01	h9
2-023	26.7	1.78	2.8	4.2	5.6	30.08	27.62	h9
2-024	28.3	1.78	2.8	4.2	5.6	31.72	29.25	h9
2-025	29.87	1.78	2.8	4.2	5.6	33.35	30.91	h9
2-026	31.47	1.78	2.8	4.2	5.6	34.99	32.55	h9
2-027	33.05	1.78	2.8	4.2	5.6	36.6	34.16	h9
2-028	34.65	1.78	2.8	4.2	5.6	38.28	35.84	h9
2-029	37.62	1.78	2.8	4.2	5.6	41.51	39.07	h9
2-030	41	1.78	2.8	4.2	5.6	44.76	42.32	h9
2-031	44.17	1.78	2.8	4.2	5.6	48.04	45.6	h9
2-032	47.35	1.78	2.8	4.2	5.6	51.28	48.84	h9
2-033	50.52	1.78	2.8	4.2	5.6	54.6	52.19	h9
2-034	53.7	1.78	2.8	4.2	5.6	57.84	55.43	h9
2-035	56.87	1.78	2.8	4.2	5.6	61.08	58.67	h9
2-036	60.05	1.78	2.8	4.2	5.6	64.32	61.91	h9
2-037	63.22	1.78	2.8	4.2	5.6	67.55	65.14	h9
2-038	66.4	1.78	2.8	4.2	5.6	70.85	68.44	h9
2-039	69.57	1.78	2.8	4.2	5.6	74.08	71.67	h9

Parker no.	d_1	d_2	b_1 0.25 0	b_2 0.25 0	b_3 0.25 0	d_4/d_9 H8/f7	d_3	Tol.
2-040	72.75	1.78	2.8	4.2	5.6	77.33	74.92	h9
2-041	75.92	1.78	2.8	4.2	5.6	80.66	78.25	h9
2-042	82.27	1.78	2.8	4.2	5.6	87.14	84.76	h9
2-043	88.62	1.78	2.8	4.2	5.6	93.61	91.23	h9
2-044	94.97	1.78	2.8	4.2	5.6	100.17	97.79	h9
2-045	101.32	1.78	2.8	4.2	5.6	106.65	104.27	h9
2-046	107.67	1.78	2.8	4.2	5.6	113.2	110.82	h9
2-047	114.02	1.78	2.8	4.2	5.6	119.68	117.3	h9
2-048	120.37	1.78	2.8	4.2	5.6	126.15	123.8	h9
2-049	126.72	1.78	2.8	4.2	5.6	132.81	130.46	h9
2-050	133.07	1.78	2.8	4.2	5.6	139.29	136.94	h9
2-102	1.24	2.62	3.8	5.2	6.6	5.38	1.38	h6
2-103	2.06	2.62	3.8	5.2	6.6	6.2	2.21	h6
2-104	2.84	2.62	3.8	5.2	6.6	6.98	2.99	h6
2-105	3.63	2.62	3.8	5.2	6.6	7.78	3.79	h6
2-106	4.42	2.62	3.8	5.2	6.6	8.57	4.58	h6
2-107	5.23	2.62	3.8	5.2	6.6	9.39	5.39	h6
2-108	6.02	2.62	3.8	5.2	6.6	10.18	6.19	h6
2-109	7.59	2.62	3.8	5.2	6.6	11.8	7.82	h8
2-110	9.19	2.62	3.8	5.2	6.6	13.41	9.44	h8
2-111	10.77	2.62	3.8	5.2	6.6	15.12	11.14	h8
2-112	12.37	2.62	3.8	5.2	6.6	16.75	12.77	h8
2-113	13.94	2.62	3.8	5.2	6.6	18.4	14.42	h8
2-114	15.54	2.62	3.8	5.2	6.6	20.09	16.1	h8
2-115	17.12	2.62	3.8	5.2	6.6	21.7	17.72	h8
2-116	18.72	2.62	3.8	5.2	6.6	23.33	19.35	h8
2-117	20.29	2.62	3.8	5.2	6.6	24.95	20.97	h8
2-118	21.89	2.62	3.8	5.2	6.6	26.58	22.71	h9
2-119	23.47	2.62	3.8	5.2	6.6	28.19	24.32	h9
2-120	25.07	2.62	3.8	5.2	6.6	29.83	25.96	h9
2-121	26.64	2.62	3.8	5.2	6.6	31.43	27.56	h9
2-122	28.24	2.62	3.8	5.2	6.6	33.06	29.19	h9
2-123	29.82	2.62	3.8	5.2	6.6	34.72	30.88	h9
2-124	31.42	2.62	3.8	5.2	6.6	36.35	32.51	h9
2-125	32.99	2.62	3.8	5.2	6.6	37.96	34.12	h9
2-126	34.59	2.62	3.8	5.2	6.6	39.59	35.75	h9

Tel: +45 63 12 83 00 | Email: ps@hymatik.com | www.hymatik.com | Hvidkaervej 27a, DK-5250 Odense SV, Denmark

3 Design recommendations

Parker no.	d_1	d_2	b_1 0.25 0	b_2 0.25 0	b_3 0.25 0	d_4/d_9 H8/f7	d_3	Tol.
2-127	36.17	2.62	3.8	5.2	6.6	41.2	37.36	h9
2-128	37.77	2.62	3.8	5.2	6.6	42.83	38.99	h9
2-129	39.34	2.62	3.8	5.2	6.6	44.51	40.67	h9
2-130	40.94	2.62	3.8	5.2	6.6	46.15	42.31	h9
2-131	42.52	2.62	3.8	5.2	6.6	47.76	43.92	h9
2-132	44.12	2.62	3.8	5.2	6.6	49.39	45.55	h9
2-133	45.69	2.62	3.8	5.2	6.6	50.99	47.15	h9
2-134	47.29	2.62	3.8	5.2	6.6	52.62	48.78	h9
2-135	48.9	2.62	3.8	5.2	6.6	54.32	50.51	h9
2-136	50.47	2.62	3.8	5.2	6.6	55.92	52.11	h9
2-137	52.07	2.62	3.8	5.2	6.6	57.55	53.74	h9
2-138	53.64	2.62	3.8	5.2	6.6	59.15	55.34	h9
2-139	55.25	2.62	3.8	5.2	6.6	60.79	56.98	h9
2-140	56.82	2.62	3.8	5.2	6.6	62.4	58.59	h9
2-141	58.42	2.62	3.8	5.2	6.6	64.11	60.3	h9
2-142	59.99	2.62	3.8	5.2	6.6	65.71	61.9	h9
2-143	61.6	2.62	3.8	5.2	6.6	67.35	63.54	h9
2-144	63.17	2.62	3.8	5.2	6.6	68.95	65.14	h9
2-145	64.77	2.62	3.8	5.2	6.6	70.59	66.78	h9
2-146	66.34	2.62	3.8	5.2	6.6	72.19	68.38	h9
2-147	67.95	2.62	3.8	5.2	6.6	73.88	70.07	h9
2-148	69.52	2.62	3.8	5.2	6.6	75.48	71.67	h9
2-149	71.12	2.62	3.8	5.2	6.6	77.11	73.3	h9
2-150	72.69	2.62	3.8	5.2	6.6	78.72	74.91	h9
2-151	75.87	2.62	3.8	5.2	6.6	82.01	78.2	h9
2-152	82.22	2.62	3.8	5.2	6.6	88.49	84.71	h9
2-153	88.57	2.62	3.8	5.2	6.6	94.96	91.18	h9
2-154	94.92	2.62	3.8	5.2	6.6	101.54	97.76	h9
2-155	101.27	2.62	3.8	5.2	6.6	108.02	104.24	h9
2-156	107.62	2.62	3.8	5.2	6.6	114.55	110.77	h9
2-157	113.97	2.62	3.8	5.2	6.6	121.02	117.24	h9
2-158	120.32	2.62	3.8	5.2	6.6	127.5	123.75	h9
2-159	126.67	2.62	3.8	5.2	6.6	134.11	130.36	h9
2-160	133.02	2.62	3.8	5.2	6.6	140.59	136.84	h9
2-161	139.37	2.62	3.8	5.2	6.6	147.07	143.32	h9
2-162	145.72	2.62	3.8	5.2	6.6	153.54	149.79	h9
2-163	152.07	2.62	3.8	5.2	6.6	160.02	156.27	h9
2-164	158.42	2.62	3.8	5.2	6.6	166.63	162.88	h9
2-165	164.77	2.62	3.8	5.2	6.6	173.11	169.36	h9
2-166	171.12	2.62	3.8	5.2	6.6	179.58	175.83	h9
2-167	177.47	2.62	3.8	5.2	6.6	186.06	182.35	h9
2-168	183.82	2.62	3.8	5.2	6.6	192.66	188.95	h9
2-169	190.17	2.62	3.8	5.2	6.6	199.14	195.43	h9
2-170	196.52	2.62	3.8	5.2	6.6	205.61	201.9	h9
2-171	202.87	2.62	3.8	5.2	6.6	212.09	208.38	h9
2-172	209.22	2.62	3.8	5.2	6.6	218.7	214.99	h9
2-173	215.57	2.62	3.8	5.2	6.6	225.18	221.47	h9
2-174	221.92	2.62	3.8	5.2	6.6	231.65	227.94	h9

Parker no.	d_1	d_2	b_1 0.25 0	b_2 0.25 0	b_3 0.25 0	d_4/d_9 H8/f7	d_3	Tol.
2-175	228.27	2.62	3.8	5.2	6.6	238.13	234.42	h9
2-176	234.62	2.62	3.8	5.2	6.6	244.74	241.03	h9
2-177	240.97	2.62	3.8	5.2	6.6	251.22	247.51	h9
2-178	247.32	2.62	3.8	5.2	6.6	257.69	254.01	h9
2-201	4.34	3.53	5	6.4	7.8	9.91	4.53	h9
2-202	5.94	3.53	5	6.4	7.8	11.53	6.17	h9
2-203	7.52	3.53	5	6.4	7.8	13.13	7.76	h9
2-204	9.12	3.53	5	6.4	7.8	14.74	9.38	h9
2-205	10.69	3.53	5	6.4	7.8	16.44	11.08	h9
2-206	12.29	3.53	5	6.4	7.8	18.07	12.71	h9
2-207	13.87	3.53	5	6.4	7.8	19.73	14.37	h9
2-208	15.47	3.53	5	6.4	7.8	21.41	16.06	h9
2-209	17.04	3.53	5	6.4	7.8	23.02	17.66	h9
2-210	18.64	3.53	5	6.4	7.8	24.67	19.32	h9
2-211	20.22	3.53	5	6.4	7.8	26.28	20.93	h9
2-212	21.82	3.53	5	6.4	7.8	27.91	22.64	h9
2-213	23.39	3.53	5	6.4	7.8	29.51	24.24	h9
2-214	24.99	3.53	5	6.4	7.8	31.14	25.87	h9
2-215	26.57	3.53	5	6.4	7.8	32.76	27.49	h9
2-216	28.17	3.53	5	6.4	7.8	34.44	29.17	h9
2-217	29.74	3.53	5	6.4	7.8	36.04	30.8	h9
2-218	31.34	3.53	5	6.4	7.8	37.67	32.43	h9
2-219	32.92	3.53	5	6.4	7.8	39.28	34.04	h9
2-220	34.52	3.53	5	6.4	7.8	40.92	35.68	h9
2-221	36.09	3.53	5	6.4	7.8	42.52	37.28	h9
2-222	37.69	3.53	5	6.4	7.8	44.23	38.99	h9
2-223	40.87	3.53	5	6.4	7.8	47.48	42.24	h9
2-224	44.04	3.53	5	6.4	7.8	50.71	45.47	h9
2-225	47.22	3.53	5	6.4	7.8	54.03	48.79	h9
2-226	50.39	3.53	5	6.4	7.8	57.27	52.06	h9
2-227	53.57	3.53	5	6.4	7.8	60.51	55.3	h9
2-228	56.74	3.53	5	6.4	7.8	63.8	58.59	h9
2-229	59.92	3.53	5	6.4	7.8	67.04	61.83	h9
2-230	63.09	3.53	5	6.4	7.8	70.27	65.06	h9
2-231	66.27	3.53	5	6.4	7.8	73.52	68.31	h9
2-232	69.44	3.53	5	6.4	7.8	76.85	71.64	h9
2-233	72.62	3.53	5	6.4	7.8	80.09	74.88	h9
2-234	75.79	3.53	5	6.4	7.8	83.33	78.12	h9
2-235	78.97	3.53	5	6.4	7.8	86.57	81.39	h9
2-236	82.14	3.53	5	6.4	7.8	89.81	84.63	h9
2-237	85.32	3.53	5	6.4	7.8	93.05	87.87	h9
2-238	88.49	3.53	5	6.4	7.8	96.28	91.1	h9
2-239	91.67	3.53	5	6.4	7.8	99.63	94.45	h9
2-240	94.84	3.53	5	6.4	7.8	102.86	97.68	h9
2-241	98.02	3.53	5	6.4	7.8	106.1	100.92	h9
2-242	101.19	3.53	5	6.4	7.8	109.34	104.16	h9
2-243	104.37	3.53	5	6.4	7.8	112.58	107.4	h9
2-244	107.54	3.53	5	6.4	7.8	115.87	110.69	h9

Tel: +45 63 12 83 00 | Email: ps@hymatik.com | www.hymatik.com | Hvidkaervej 27a, DK-5250 Odense SV, Denmark

3 Design recommendations

Parker no.	d_1	d_2	b_1 0.25 0	b_2 0.25 0	b_3 0.25 0	d_4/d_9 H8/f7	d_3	Tol.
2-245	110.72	3.53	5	6.4	7.8	119.11	113.93	h9
2-246	113.89	3.53	5	6.4	7.8	122.34	117.16	h9
2-247	117.07	3.53	5	6.4	7.8	125.59	120.44	h9
2-248	120.24	3.53	5	6.4	7.8	128.82	123.67	h9
2-249	123.42	3.53	5	6.4	7.8	132.2	127.05	h9
2-250	126.59	3.53	5	6.4	7.8	135.43	130.28	h9
2-251	129.77	3.53	5	6.4	7.8	138.67	133.52	h9
2-252	132.94	3.53	5	6.4	7.8	141.91	136.76	h9
2-253	136.12	3.53	5	6.4	7.8	145.15	140	h9
2-254	139.29	3.53	5	6.4	7.8	148.38	143.23	h9
2-255	142.47	3.53	5	6.4	7.8	151.63	146.48	h9
2-256	145.64	3.53	5	6.4	7.8	154.86	149.71	h9
2-257	148.82	3.53	5	6.4	7.8	158.1	152.95	h9
2-258	151.99	3.53	5	6.4	7.8	161.34	156.19	h9
2-259	158.34	3.53	5	6.4	7.8	167.95	162.8	h9
2-260	164.69	3.53	5	6.4	7.8	174.42	169.27	h9
2-261	171.04	3.53	5	6.4	7.8	180.9	175.75	h9
2-262	177.39	3.53	5	6.4	7.8	187.38	182.27	h9
2-263	183.74	3.53	5	6.4	7.8	193.98	188.87	h9
2-264	190.09	3.53	5	6.4	7.8	200.45	195.34	h9
2-265	196.44	3.53	5	6.4	7.8	206.93	201.82	h9
2-266	202.79	3.53	5	6.4	7.8	213.41	208.3	h9
2-267	209.14	3.53	5	6.4	7.8	220.02	214.91	h9
2-268	215.49	3.53	5	6.4	7.8	226.5	221.39	h9
2-269	221.84	3.53	5	6.4	7.8	232.97	227.86	h9
2-270	228.19	3.53	5	6.4	7.8	239.45	234.34	h9
2-271	234.54	3.53	5	6.4	7.8	246.06	240.95	h9
2-272	240.89	3.53	5	6.4	7.8	252.54	247.43	h9
2-273	247.24	3.53	5	6.4	7.8	259.01	253.93	h9
2-274	253.59	3.53	5	6.4	7.8	265.49	260.41	h9
2-275	266.29	3.53	5	6.4	7.8	278.44	273.36	h9
2-276	278.99	3.53	5	6.4	7.8	291.65	286.57	h9
2-277	291.69	3.53	5	6.4	7.8	304.61	299.53	h9
2-278	304.39	3.53	5	6.4	7.8	317.56	312.48	h9
2-279	329.79	3.53	5	6.4	7.8	343.47	338.43	h9
2-280	355.19	3.53	5	6.4	7.8	369.38	364.34	h9
2-281	380.59	3.53	5	6.4	7.8	395.28	390.24	h9
2-282	405.26	3.53	5	6.4	7.8	417.65	412.65	h9
2-283	430.68	3.53	5	6.4	7.8	446.74	441.74	h9
2-284	456.06	3.53	5	6.4	7.8	472.78	467.78	h9
2-309	10.46	5.33	7.2	9	10.9	19	10.83	h9
2-310	12.07	5.33	7.2	9	10.9	20.64	12.47	h9
2-311	13.64	5.33	7.2	9	10.9	22.3	14.13	h9
2-312	15.24	5.33	7.2	9	10.9	23.98	15.81	h9
2-313	16.81	5.33	7.2	9	10.9	25.58	17.41	h9
2-314	18.42	5.33	7.2	9	10.9	27.24	19.08	h9
2-315	19.99	5.33	7.2	9	10.9	28.84	20.68	h9
2-316	21.59	5.33	7.2	9	10.9	30.48	22.37	h9

Parker no.	d_1	d_2	b_1 0.25 0	b_2 0.25 0	b_3 0.25 0	d_4/d_9 H8/f7	d_3	Tol.
2-317	23.16	5.33	7.2	9	10.9	32.08	24.01	h9
2-318	24.77	5.33	7.2	9	10.9	33.72	25.65	h9
2-319	26.34	5.33	7.2	9	10.9	35.32	27.25	h9
2-320	27.94	5.33	7.2	9	10.9	37	28.93	h9
2-321	29.51	5.33	7.2	9	10.9	38.61	30.57	h9
2-322	31.12	5.33	7.2	9	10.9	40.25	32.21	h9
2-323	32.69	5.33	7.2	9	10.9	41.85	33.81	h9
2-324	34.29	5.33	7.2	9	10.9	43.48	35.44	h9
2-325	37.47	5.33	7.2	9	10.9	46.81	38.77	h9
2-326	40.64	5.33	7.2	9	10.9	50.04	42	h9
2-327	43.82	5.33	7.2	9	10.9	53.28	45.24	h9
2-328	46.99	5.33	7.2	9	10.9	56.52	48.48	h9
2-329	50.17	5.33	7.2	9	10.9	59.84	51.83	h9
2-330	53.34	5.33	7.2	9	10.9	63.08	55.07	h9
2-331	56.52	5.33	7.2	9	10.9	66.32	58.31	h9
2-332	59.69	5.33	7.2	9	10.9	69.55	61.54	h9
2-333	62.87	5.33	7.2	9	10.9	72.85	64.84	h9
2-334	66.04	5.33	7.2	9	10.9	76.08	68.07	h9
2-335	69.22	5.33	7.2	9	10.9	79.32	71.31	h9
2-336	72.39	5.33	7.2	9	10.9	82.56	74.55	h9
2-337	75.57	5.33	7.2	9	10.9	85.8	77.89	h9
2-338	78.74	5.33	7.2	9	10.9	89.14	81.16	h9
2-339	81.92	5.33	7.2	9	10.9	92.38	84.4	h9
2-340	85.09	5.33	7.2	9	10.9	95.61	87.63	h9
2-341	88.27	5.33	7.2	9	10.9	98.86	90.88	h9
2-342	91.44	5.33	7.2	9	10.9	102.19	94.21	h9
2-343	94.62	5.33	7.2	9	10.9	105.44	97.46	h9
2-344	97.79	5.33	7.2	9	10.9	108.67	100.69	h9
2-345	100.97	5.33	7.2	9	10.9	111.91	103.93	h9
2-346	104.14	5.33	7.2	9	10.9	115.15	107.17	h9
2-347	107.32	5.33	7.2	9	10.9	118.44	110.46	h9
2-348	110.49	5.33	7.2	9	10.9	121.68	113.7	h9
2-349	113.67	5.33	7.2	9	10.9	124.92	116.94	h9
2-350	116.84	5.33	7.2	9	10.9	128.15	120.17	h9
2-351	120.02	5.33	7.2	9	10.9	131.4	123.45	h9
2-352	123.19	5.33	7.2	9	10.9	134.63	126.88	h9
2-353	126.37	5.33	7.2	9	10.9	138.06	130.11	h9
2-354	129.54	5.33	7.2	9	10.9	141.29	133.34	h9
2-355	132.72	5.33	7.2	9	10.9	144.53	136.58	h9
2-356	135.89	5.33	7.2	9	10.9	147.77	139.82	h9
2-357	139.07	5.33	7.2	9	10.9	151.01	143.06	h9
2-358	142.24	5.33	7.2	9	10.9	154.24	146.29	h9
2-359	145.42	5.33	7.2	9	10.9	157.49	149.54	h9
2-360	148.59	5.33	7.2	9	10.9	160.72	152.77	h9
2-361	151.77	5.33	7.2	9	10.9	163.96	156.01	h9
2-362	158.12	5.33	7.2	9	10.9	170.52	162.57	h9
2-363	164.47	5.33	7.2	9	10.9	177	169.05	h9
2-364	170.82	5.33	7.2	9	10.9	183.48	175.53	h9

Tel: +45 63 12 83 00 | Email: ps@hymatik.com | www.hymatik.com | Hvidkaervej 27a, DK-5250 Odense SV, Denmark

3 Design recommendations

Parker no.	d_1	d_2	b_1 0.25 0	b_2 0.25 0	b_3 0.25 0	d_4/d_9 H8/f7	d_3 Tol.	
2-365	177.17	5.33	7.2	9	10.9	189.95	182.04	h9
2-366	183.52	5.33	7.2	9	10.9	196.55	188.64	h9
2-367	189.87	5.33	7.2	9	10.9	203.03	195.12	h9
2-368	196.22	5.33	7.2	9	10.9	209.51	201.6	h9
2-369	202.57	5.33	7.2	9	10.9	215.98	208.07	h9
2-370	208.92	5.33	7.2	9	10.9	222.59	214.68	h9
2-371	215.27	5.33	7.2	9	10.9	229.07	221.16	h9
2-372	221.62	5.33	7.2	9	10.9	235.55	227.64	h9
2-373	227.97	5.33	7.2	9	10.9	242.02	234.11	h9
2-374	234.32	5.33	7.2	9	10.9	248.63	240.72	h9
2-375	240.67	5.33	7.2	9	10.9	255.11	247.2	h9
2-376	247.02	5.33	7.2	9	10.9	261.59	253.71	h9
2-377	253.37	5.33	7.2	9	10.9	268.07	260.19	h9
2-378	266.07	5.33	7.2	9	10.9	281.14	273.26	h9
2-379	278.77	5.33	7.2	9	10.9	294.1	286.22	h9
2-380	291.47	5.33	7.2	9	10.9	307.18	299.3	h9
2-381	304.17	5.33	7.2	9	10.9	320.14	312.26	h9
2-382	329.57	5.33	7.2	9	10.9	346.04	338.2	h9
2-383	354.97	5.33	7.2	9	10.9	372.09	364.25	h9
2-384	405.26	5.33	7.2	9	10.9	423.51	415.71	h9
2-386	430.66	5.33	7.2	9	10.9	449.54	441.74	h9
2-387	456.06	5.33	7.2	9	10.9	475.58	467.78	h9
2-388	481.38	5.33	7.2	9	10.9	501.54	493.74	h9
2-389	506.78	5.33	7.2	9	10.9	527.57	519.81	h9
2-390	532.18	5.33	7.2	9	10.9	553.48	545.72	h9
2-391	557.58	5.33	7.2	9	10.9	579.52	571.76	h9
2-392	582.68	5.33	7.2	9	10.9	605.26	597.5	h9
2-393	608.08	5.33	7.2	9	10.9	631.29	623.53	h9
2-394	633.48	5.33	7.2	9	10.9	657.33	649.61	h9
2-395	658.88	5.33	7.2	9	10.9	683.37	675.65	h9
2-425	113.67	6.99	9.5	12.3	15.1	127.8	117.02	h9
2-426	116.84	6.99	9.5	12.3	15.1	131.03	120.28	h9
2-427	120.02	6.99	9.5	12.3	15.1	134.28	123.53	h9
2-428	123.19	6.99	9.5	12.3	15.1	137.51	126.76	h9
2-429	126.37	6.99	9.5	12.3	15.1	140.86	130.11	h9
2-430	129.54	6.99	9.5	12.3	15.1	144.09	133.34	h9
2-431	132.72	6.99	9.5	12.3	15.1	147.33	136.58	h9
2-432	135.89	6.99	9.5	12.3	15.1	150.57	139.82	h9
2-433	139.07	6.99	9.5	12.3	15.1	153.81	143.06	h9
2-434	142.24	6.99	9.5	12.3	15.1	157.04	146.29	h9
2-435	145.42	6.99	9.5	12.3	15.1	160.29	149.54	h9
2-436	148.59	6.99	9.5	12.3	15.1	163.52	152.77	h9
2-437	151.77	6.99	9.5	12.3	15.1	166.76	156.01	h9
2-438	158.12	6.99	9.5	12.3	15.1	173.32	162.57	h9
2-439	164.47	6.99	9.5	12.3	15.1	179.8	169.05	h9
2-440	170.82	6.99	9.5	12.3	15.1	186.28	175.53	h9
2-441	177.17	6.99	9.5	12.3	15.1	192.75	182.04	h9
2-442	183.52	6.99	9.5	12.3	15.1	199.35	188.64	h9
2-443	189.87	6.99	9.5	12.3	15.1	205.83	195.12	h9
2-444	196.22	6.99	9.5	12.3	15.1	212.67	201.6	h9
2-445	202.57	6.99	9.5	12.3	15.1	219.15	208.07	h9
2-446	215.27	6.99	9.5	12.3	15.1	232.36	221.29	h9
2-447	227.97	6.99	9.5	12.3	15.1	245.31	234.25	h9
2-448	240.67	6.99	9.5	12.3	15.1	258.26	247.2	h9
2-449	253.37	6.99	9.5	12.3	15.1	271.21	260.19	h9
2-450	266.07	6.99	9.5	12.3	15.1	284.3	273.26	h9
2-451	278.77	6.99	9.5	12.3	15.1	297.25	286.22	h9
2-452	291.47	6.99	9.5	12.3	15.1	310.21	299.17	h9
2-453	304.17	6.99	9.5	12.3	15.1	323.16	312.32	h9
2-454	316.87	6.99	9.5	12.3	15.1	336.01	325.12	h9
2-455	329.57	6.99	9.5	12.3	15.1	349.07	338.07	h9
2-456	342.27	6.99	9.5	12.3	15.1	362.28	351.29	h9
2-457	354.97	6.99	9.5	12.3	15.1	375.23	364.25	h9
2-458	367.67	6.99	9.5	12.3	15.1	388.19	377.2	h9
2-459	380.37	6.99	9.5	12.3	15.1	401.14	390.15	h9
2-460	393.07	6.99	9.5	12.3	15.1	414.09	403.15	h9
2-461	405.26	6.99	9.5	12.3	15.1	426.66	415.71	h9
2-462	417.96	6.99	9.5	12.3	15.1	439.61	428.67	h9
2-463	430.66	6.99	9.5	12.3	15.1	452.7	441.74	h9
2-464	443.36	6.99	9.5	12.3	15.1	465.79	454.83	h9
2-465	456.06	6.99	9.5	12.3	15.1	478.74	467.78	h9
2-466	468.76	6.99	9.5	12.3	15.1	491.69	480.74	h9
2-467	481.46	6.99	9.5	12.3	15.1	504.76	493.83	h9
2-468	494.16	6.99	9.5	12.3	15.1	517.72	506.82	h9
2-469	506.86	6.99	9.5	12.3	15.1	530.8	519.9	h9
2-470	532.26	6.99	9.5	12.3	15.1	556.71	545.8	h9
2-471	557.66	6.99	9.5	12.3	15.1	582.73	571.84	h9
2-472	582.68	6.99	9.5	12.3	15.1	608.39	597.5	h9
2-473	608.08	6.99	9.5	12.3	15.1	634.43	623.53	h9
2-474	633.48	6.99	9.5	12.3	15.1	660.47	649.61	h9
2-475	658.88	6.99	9.5	12.3	15.1	686.51	675.65	h9

Tab. 3.2

Tel: +45 63 12 83 00 | Email: ps@hymatik.com | www.hymatik.com | Hvidkaervej 27a, DK-5250 Odense SV, Denmark

3 Design recommendations

Parker no.	d_1	d_2	b_1 +0,25 0	b_2 +0.25 0	b_3 +0,25 0	d_4/d_9 H8/f7	d_3 h9
2-014	12.42	1.78	2.8	4.2	5.6	16	13.4
2-114	15.54	2.62	3.8	5.2	6.6	20	16
2-117	20.3	2.62	3.8	5.2	6.6	25	21
2-121	26.64	2.62	3.8	5.2	6.6	32	28
2-126	34.59	2.62	3.8	5.2	6.6	40	36
2-224	44.04	3.53	5	6.4	7.8	50	44.6
2-228	56.74	3.53	5	6.4	7.8	63	57.6
2-233	72.62	3.53	5	6.4	7.8	80	74.6
2-236	82.14	3.53	5	6.4	7.8	90	84.6
2-342	91.44	5.33	7.2	9	10.9	100	92
2-345	100.97	5.33	7.2	9	10.9	110	102
2-349	113.67	5.33	7.2	9	10.9	125	117
2-354	129.54	5.33	7.2	9	10.9	140	132
2-360	148.59	5.33	7.2	9	10.9	160	152
2-439	164.47	6.99	9.5	12.3	15.1	180	168.4
2-442	183.52	6.99	9.5	12.3	15.1	200	188.4
2-445	202.57	6.99	9.5	12.3	15.1	220	208.4
2-447	227.97	6.99	9.5	12.3	15.1	250	238.6
2-450	266.07	6.99	9.5	12.3	15.1	280	268.4
2-453	304.17	6.99	9.5	12.3	15.1	320	308.4
2-456	342.27	6.99	9.5	12.3	15.1	360	348.4
2-459	380.38	6.99	9.5	12.3	15.1	400	388.4
2-463	430.66	6.99	9.5	12.3	15.1	450	438.4
2-467	481.46	6.99	9.5	12.3	15.1	500	488.4

Tab. 3.3 Basic dimensions of O-ring grooves for use in static piston seals of selected metric sizes in pneumatic and hydraulic applications.

Tel: +45 63 12 83 00 | Email: ps@hymatik.com | www.hymatik.com | Hvidkaervej 27a, DK-5250 Odense SV, Denmark

3 Design recommendations

3.1.3 Rod seal static

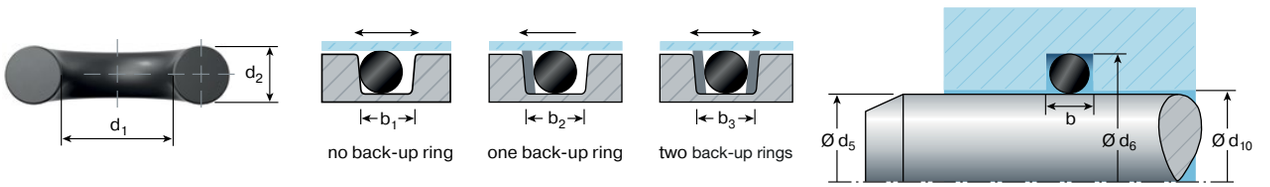

Fig. 3.6

Parker no.	d_1	d_2	b_1 +0,25 0	b_2 +0,25 0	b_3 +0,25 0	d_5/d_{10} f7/H8	d_6 H9
2-004	1.78	1.78	2.8	4.2	5.6	1.95	4.56
2-005	2.57	1.78	2.8	4.2	5.6	2.76	5.4
2-006	2.9	1.78	2.8	4.2	5.6	3.16	5.75
2-007	3.68	1.78	2.8	4.2	5.6	3.87	6.5
2-008	4.47	1.78	2.8	4.2	5.6	4.7	7.35
2-009	5.28	1.78	2.8	4.2	5.6	5.5	8.15
2-010	6.07	1.78	2.8	4.2	5.6	6.3	9
2-011	7.65	1.78	2.8	4.2	5.6	8	10.7
2-012	9.25	1.78	2.8	4.2	5.6	9.5	12.2
2-013	10.82	1.78	2.8	4.2	5.6	11.2	13.9
2-014	12.42	1.78	2.8	4.2	5.6	12.8	15.45
2-015	14	1.78	2.8	4.2	5.6	14.5	17.17
2-016	15.6	1.78	2.8	4.2	5.6	16.1	18.7
2-017	17.17	1.78	2.8	4.2	5.6	17.6	20.2
2-018	18.77	1.78	2.8	4.2	5.6	19.3	21.88
2-019	20.35	1.78	2.8	4.2	5.6	21	23.46
2-020	21.95	1.78	2.8	4.2	5.6	22.5	25.05
2-021	23.52	1.78	2.8	4.2	5.6	24.1	26.62
2-022	25.12	1.78	2.8	4.2	5.6	25.7	28.2
2-023	26.7	1.78	2.8	4.2	5.6	27.3	29.78
2-024	28.3	1.78	2.8	4.2	5.6	29	31.38
2-025	29.87	1.78	2.8	4.2	5.6	30.5	32.92
2-026	31.47	1.78	2.8	4.2	5.6	32.15	34.52
2-027	33.05	1.78	2.8	4.2	5.6	33.7	36.1
2-102	1.24	2.62	3.8	5.2	6.6	1.4	5.23
2-103	2.06	2.62	3.8	5.2	6.6	2.23	6.24
2-104	2.84	2.62	3.8	5.2	6.6	3.03	7
2-105	3.63	2.62	3.8	5.2	6.6	3.85	7.8
2-106	4.42	2.62	3.8	5.2	6.6	4.65	8.8
2-107	5.23	2.62	3.8	5.2	6.6	5.5	9.6
2-108	6.02	2.62	3.8	5.2	6.6	6.3	10.4
2-109	7.59	2.62	3.8	5.2	6.6	8	12
2-110	9.19	2.62	3.8	5.2	6.6	9.5	13.6
2-111	10.77	2.62	3.8	5.2	6.6	11.2	15.3
2-112	12.37	2.62	3.8	5.2	6.6	12.8	16.9
2-113	13.94	2.62	3.8	5.2	6.6	14.5	18.6

Parker no.	d_1	d_2	b_1 +0,25 0	b_2 +0,25 0	b_3 +0,25 0	d_5/d_{10} f7/H8	d_6 H9
2-114	15.54	2.62	3.8	5.2	6.6	16	20.1
2-115	17.12	2.62	3.8	5.2	6.6	17.7	21.7
2-116	18.72	2.62	3.8	5.2	6.6	19.3	23.4
2-117	20.29	2.62	3.8	5.2	6.6	21	25
2-118	21.89	2.62	3.8	5.2	6.6	22.5	26.6
2-119	23.47	2.62	3.8	5.2	6.6	24	28
2-120	25.07	2.62	3.8	5.2	6.6	25.7	29.8
2-121	26.64	2.62	3.8	5.2	6.6	27.3	31.4
2-122	28.24	2.62	3.8	5.2	6.6	29	33
2-123	29.82	2.62	3.8	5.2	6.6	30.5	34.5
2-124	31.42	2.62	3.8	5.2	6.6	32.1	36.1
2-125	32.99	2.62	3.8	5.2	6.6	34	37.7
2-126	34.59	2.62	3.8	5.2	6.6	35.5	39.3
2-127	36.17	2.62	3.8	5.2	6.6	37	40.88
2-128	37.77	2.62	3.8	5.2	6.6	38.5	42.4
2-129	39.34	2.62	3.8	5.2	6.6	40.2	43.9
2-130	40.94	2.62	3.8	5.2	6.6	41.8	45.5
2-131	42.52	2.62	3.8	5.2	6.6	43.4	47.1
2-132	44.12	2.62	3.8	5.2	6.6	45	48.7
2-133	45.69	2.62	3.8	5.2	6.6	46.6	50.3
2-134	47.29	2.62	3.8	5.2	6.6	48.2	51.9
2-201	4.34	3.53	5	6.4	7.8	4.56	10.19
2-202	5.94	3.53	5	6.4	7.8	6.2	11.85
2-203	7.52	3.53	5	6.4	7.8	7.8	13.51
2-204	9.12	3.53	5	6.4	7.8	9.4	15.1
2-205	10.69	3.53	5	6.4	7.8	11	16.5
2-206	12.29	3.53	5	6.4	7.8	12.7	18.2
2-207	13.87	3.53	5	6.4	7.8	14.3	19.8
2-208	15.47	3.53	5	6.4	7.8	16	21.5
2-209	17.04	3.53	5	6.4	7.8	17.5	23
2-210	18.64	3.53	5	6.4	7.8	19.3	24.8
2-211	20.22	3.53	5	6.4	7.8	21	26.5
2-212	21.82	3.53	5	6.4	7.8	22.5	27.97
2-213	23.39	3.53	5	6.4	7.8	24.1	29.6
2-214	24.99	3.53	5	6.4	7.8	25.7	31.2
2-215	26.57	3.53	5	6.4	7.8	27.2	32.7

Tel: +45 63 12 83 00 | Email: ps@hymatik.com | www.hymatik.com | Hvidkaervej 27a, DK-5250 Odense SV, Denmark

3 Design recommendations

Parker no.	d_1	d_2	b_1 +0,25 0	b_2 +0,25 0	b_3 +0,25 0	d_5/d_{10} f7/H8	d_6 H9
2-216	28.17	3.53	5	6.4	7.8	28.8	34.3
2-217	29.74	3.53	5	6.4	7.8	30.4	35.85
2-218	31.34	3.53	5	6.4	7.8	32	37.45
2-219	32.92	3.53	5	6.4	7.8	33.6	39.1
2-220	34.52	3.53	5	6.4	7.8	35.3	40.65
2-221	36.09	3.53	5	6.4	7.8	36.8	42.2
2-222	37.69	3.53	5	6.4	7.8	38.5	43.85
2-223	40.87	3.53	5	6.4	7.8	42	47.28
2-224	44.04	3.53	5	6.4	7.8	45	50.4
2-225	47.22	3.53	5	6.4	7.8	48.2	53.54
2-226	50.39	3.53	5	6.4	7.8	51.5	56.7
2-227	53.57	3.53	5	6.4	7.8	54.7	59.89
2-228	56.74	3.53	5	6.4	7.8	58	63
2-229	59.92	3.53	5	6.4	7.8	61.1	66.19
2-230	63.09	3.53	5	6.4	7.8	64.3	69.36
2-231	66.27	3.53	5	6.4	7.8	67.5	72.54
2-309	10.46	5.33	7.2	9	10.9	10.8	19.5
2-310	12.07	5.33	7.2	9	10.9	12.5	21.3
2-311	13.64	5.33	7.2	9	10.9	14.1	22.9
2-312	15.24	5.33	7.2	9	10.9	15.7	24.5
2-313	16.81	5.33	7.2	9	10.9	17.5	26.1
2-314	18.42	5.33	7.2	9	10.9	19	27.5
2-315	19.99	5.33	7.2	9	10.9	20.5	29
2-316	21.59	5.33	7.2	9	10.9	22.53	31.29
2-317	23.16	5.33	7.2	9	10.9	24	32.8
2-318	24.77	5.33	7.2	9	10.9	25.5	34.3
2-319	26.34	5.33	7.2	9	10.9	27	35.8
2-320	27.94	5.33	7.2	9	10.9	29	37.5
2-321	29.51	5.33	7.2	9	10.9	30.5	39
2-322	31.12	5.33	7.2	9	10.9	32	40.5
2-323	32.69	5.33	7.2	9	10.9	33.5	42
2-324	34.29	5.33	7.2	9	10.9	35	43.5
2-325	37.47	5.33	7.2	9	10.9	38.5	46.8
2-326	40.64	5.33	7.2	9	10.9	41.5	49.8
2-327	43.82	5.33	7.2	9	10.9	45	53.3
2-328	46.99	5.33	7.2	9	10.9	48	56.3
2-329	50.17	5.33	7.2	9	10.9	51.2	59.5
2-330	53.34	5.33	7.2	9	10.9	54.4	62.7
2-331	56.52	5.33	7.2	9	10.9	57.55	65.9
2-332	59.69	5.33	7.2	9	10.9	61	69.3
2-333	62.87	5.33	7.2	9	10.9	64.1	72.4
2-334	66.04	5.33	7.2	9	10.9	67.25	75.6
2-335	69.22	5.33	7.2	9	10.9	70.4	78.7
2-336	72.39	5.33	7.2	9	10.9	73.61	81.9
2-337	75.57	5.33	7.2	9	10.9	77	85.25
2-338	78.74	5.33	7.2	9	10.9	80.2	88.42
2-339	81.92	5.33	7.2	9	10.9	83.5	91.6
2-340	85.09	5.33	7.2	9	10.9	86.6	94.75
2-341	88.27	5.33	7.2	9	10.9	90	97.97
2-342	91.44	5.33	7.2	9	10.9	93.1	101.04
2-343	94.62	5.33	7.2	9	10.9	96.4	104.22
2-344	97.79	5.33	7.2	9	10.9	99.6	107.39
2-345	100.97	5.33	7.2	9	10.9	102.8	110.57
2-346	104.14	5.33	7.2	9	10.9	106	113.74
2-347	107.32	5.33	7.2	9	10.9	109.15	116.87
2-348	110.49	5.33	7.2	9	10.9	112.3	120.03
2-349	113.67	5.33	7.2	9	10.9	115.5	123.21
2-425	113.67	6.99	9.5	12.3	15.1	115.7	126.4
2-426	116.84	6.99	9.5	12.3	15.1	119	129.58
2-427	120.02	6.99	9.5	12.3	15.1	122	132.76
2-428	123.19	6.99	9.5	12.3	15.1	125.3	135.93
2-429	126.37	6.99	9.5	12.3	15.1	128.5	139.01

Tab. 3.4

Tel: +45 63 12 83 00 | Email: ps@hymatik.com | www.hymatik.com | Hvidkaervej 27a, DK-5250 Odense SV, Denmark

3 Design recommendations

Parker no.	d_1	d_2	b_1 +0,25 0	b_2 +0,25 0	b_3 +0,25 0	d_5/d_{10} f7/H8	d_6 H9
2-010	6.07	1.78	2.8	4.2	5.6	6	8.8
2-011	7.65	1.78	2.8	4.2	5.6	8	10.7
2-013	10.92	1.78	2.8	4.2	5.6	10	12.8
2-014	12.42	1.78	2.8	4.2	5.6	12	14.8
2-015	14	1.78	2.8	4.2	5.6	14	16.8
2-016	15.6	1.78	2.8	4.2	5.6	16	18.7
2-018	18.77	1.78	2.8	4.2	5.6	18	20.8
2-117	20.3	2.62	3.8	5.2	6.6	20	24
2-118	21.89	2.62	3.8	5.2	6.6	22	26
2-120	25.07	2.62	3.8	5.2	6.6	25	29
2-122	28.24	2.62	3.8	5.2	6.6	28	32
2-125	32.99	2.62	3.8	5.2	6.6	32	36
2-221	36.09	3.53	5	6.4	7.8	36	41.4
2-223	40.87	3.53	5	6.4	7.8	40	45.4
2-224	44.04	3.53	5	6.4	7.8	45	50.4
2-329	50.17	5.33	7.2	9	10.9	50	58
2-331	56.52	5.33	7.2	9	10.9	56	64
2-333	62.87	5.33	7.2	9	10.9	63	71
2-335	69.22	5.33	7.2	9	10.9	70	78
2-339	81.92	5.33	7.2	9	10.9	80	88
2-342	91.44	5.33	7.2	9	10.9	90	98
2-345	100.97	5.33	7.2	9	10.9	100	108
2-348	110.49	5.33	7.2	9	10.9	110	118
2-429	126.37	6.99	9.5	12.3	15.1	125	136.6
2-433	139.07	6.99	9.5	12.3	15.1	140	151.6
2-438	158.12	6.99	9.5	12.3	15.1	160	171.6
2-442	183.52	6.99	9.5	12.3	15.1	180	191.6
2-445	202.57	6.99	9.5	12.3	15.1	200	211.6
2-447	227.97	6.99	9.5	12.3	15.1	220	231.6
2-449	253.37	6.99	9.5	12.3	15.1	250	261.6
2-451	278.77	6.99	9.5	12.3	15.1	280	291.6
2-455	329.57	6.99	9.5	12.3	15.1	320	331.6
2-458	367.67	6.99	9.5	12.3	15.1	360	371.6

Tab. 3.5 Basic dimensions of O-ring grooves for use in static rod seals of selected metric sizes in pneumatic and hydraulic applications.

Tel: +45 63 12 83 00 | Email: ps@hymatik.com | www.hymatik.com | Hvidkaervej 27a, DK-5250 Odense SV, Denmark

3.1.4 Flange seal static

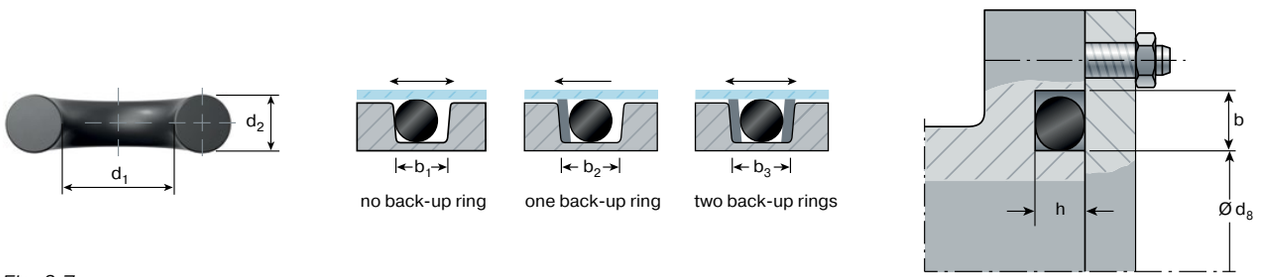

Fig. 3.7

Parker no.	d_1	d_2	d_7 H9 Internal Pressure	d_8 h9 External Pressure
2-004	1.78	1.78	5.33	1.8
2-005	2.57	1.78	6.12	2.59
2-006	2.9	1.78	6.45	2.92
2-007	3.68	1.78	7.24	3.71
2-008	4.47	1.78	8.03	4.5
2-009	5.28	1.78	8.84	5.33
2-010	6.07	1.78	9.63	6.12
2-011	7.65	1.78	11.2	7.72
2-012	9.25	1.78	12.8	9.32
2-013	10.82	1.78	14.38	10.92
2-014	12.42	1.78	15.98	12.55
2-015	14	1.78	17.55	14.15
2-016	15.6	1.78	19.15	15.75
2-017	17.17	1.78	20.73	17.3
2-018	18.77	1.78	22.33	18.9
2-019	20.35	1.78	23.9	20.47
2-020	21.95	1.78	25.5	22.07
2-021	23.52	1.78	27.08	23.75
2-022	25.12	1.78	28.68	25.37
2-023	26.7	1.78	30.25	26.97
2-024	28.3	1.78	31.85	28.58
2-025	29.87	1.78	33.43	30.18
2-026	31.47	1.78	35.03	31.78
2-027	33.05	1.78	36.6	33.38
2-028	34.65	1.78	38.2	35
2-029	37.62	1.78	41.38	38.2
2-030	41	1.78	44.55	41.4
2-031	44.17	1.78	47.73	44.6
2-032	47.35	1.78	50.9	47.83
2-033	50.52	1.78	54.08	51.03
2-034	53.7	1.78	57.25	54.23
2-035	56.87	1.78	60.43	57.43
2-036	60.05	1.78	63.6	60.66
2-037	63.22	1.78	66.78	63.86

Parker no.	d_1	d_2	d_7 H9 Internal Pressure	d_8 h9 External Pressure
2-038	66.4	1.78	69.95	67.06
2-039	69.57	1.78	73.13	70.26
2-040	72.75	1.78	76.3	73.48
2-041	75.92	1.78	79.48	76.68
2-042	82.27	1.78	85.83	83.08
2-043	88.62	1.78	92.18	89.51
2-044	94.97	1.78	96.53	95.91
2-045	101.32	1.78	104.87	102.33
2-046	107.67	1.78	111.22	108.73
2-047	114.02	1.78	117.57	115.16
2-048	120.37	1.78	123.92	121.56
2-049	126.72	1.78	130.27	127.99
2-050	133.07	1.78	136.62	134.39
2-102	1.24	2.62	6.48	1.27
2-103	2.06	2.62	7.29	2.08
2-104	2.84	2.62	8.08	2.87
2-105	3.63	2.62	8.86	3.66
2-106	4.42	2.62	9.65	4.47
2-107	5.23	2.62	10.46	5.28
2-108	6.02	2.62	11.25	6.07
2-109	7.59	2.62	12.83	7.67
2-110	9.19	2.62	14.43	9.27
2-111	10.77	2.62	16	10.87
2-112	12.37	2.62	17.6	12.5
2-113	13.94	2.62	19.18	14.07
2-114	15.54	2.62	20.78	15.68
2-115	17.12	2.62	22.35	17.3
2-116	18.72	2.62	23.95	18.9
2-117	20.29	2.62	25.53	20.5
2-118	21.89	2.62	27.13	22.12
2-119	23.47	2.62	28.7	23.7
2-120	25.07	2.62	30.3	25.3
2-121	26.64	2.62	31.88	26.9
2-122	28.24	2.62	33.48	28.52

Tel: +45 63 12 83 00 | Email: ps@hymatik.com | www.hymatik.com | Hvidkaervej 27a, DK-5250 Odense SV, Denmark

3 Design recommendations

Parker no.	d_1	d_2	d_7 H9 Internal Pressure	d_8 h9 External Pressure
2-123	29.82	2.62	35.05	30.12
2-124	31.42	2.62	36.65	31.98
2-125	32.99	2.62	38.23	33.32
2-126	34.59	2.62	39.83	34.95
2-127	36.17	2.62	41.4	36.53
2-128	37.77	2.62	43	38.15
2-129	39.34	2.62	44.58	39.73
2-130	40.94	2.62	46.18	41.35
2-131	42.52	2.62	47.75	41.95
2-132	44.12	2.62	49.35	44.55
2-133	45.69	2.62	50.93	46.15
2-134	47.29	2.62	52.53	47.78
2-135	48.9	2.62	54.13	49.38
2-136	50.47	2.62	55.7	50.98
2-137	52.07	2.62	57.3	52.6
2-138	53.64	2.62	58.88	54.18
2-139	55.25	2.62	60.48	55.8
2-140	56.82	2.62	62.05	57.38
2-141	58.42	2.62	63.65	59
2-142	59.99	2.62	65.23	60.6
2-143	61.6	2.62	66.83	62.2
2-144	63.17	2.62	68.4	63.8
2-145	64.77	2.62	70	65.43
2-146	66.34	2.62	71.58	67.05
2-147	67.95	2.62	73.18	68.63
2-148	69.52	2.62	74.75	70.21
2-149	71.12	2.62	76.35	71.83
2-150	72.69	2.62	77.93	73.43
2-151	75.87	2.62	81.1	76.63
2-152	82.22	2.62	87.45	83.03
2-153	88.57	2.62	93.8	89.46
2-154	94.92	2.62	100.15	95.86
2-155	101.27	2.62	106.5	102.28
2-156	107.62	2.62	112.85	108.68
2-157	113.97	2.62	119.2	115.11
2-158	120.32	2.62	125.55	121.51
2-159	126.67	2.62	131.9	127.94
2-160	133.02	2.62	138.25	134.34
2-161	139.37	2.62	144.6	140.76
2-162	145.72	2.62	150.95	147.16
2-163	152.07	2.62	157.3	153.59
2-164	158.42	2.62	163.65	159.94
2-165	164.77	2.62	170	166.29
2-166	171.12	2.62	176.35	172.64
2-167	177.47	2.62	182.7	178.99
2-168	183.82	2.62	189.05	185.34
2-169	190.17	2.62	195.4	191.69
2-170	196.52	2.62	201.75	198.04

Parker no.	d_1	d_2	d_7 H9 Internal Pressure	d_8 h9 External Pressure
2-171	202.87	2.62	208.1	204.39
2-172	209.22	2.62	214.45	210.74
2-173	215.57	2.62	220.8	217.09
2-174	221.92	2.62	227.15	223.44
2-175	228.27	2.62	233.5	229.79
2-176	234.62	2.62	239.85	236.14
2-177	240.97	2.62	246.2	242.54
2-178	247.32	2.62	252.55	248.84
2-201	4.34	3.53	11.4	4.39
2-202	5.94	3.53	13	5.99
2-203	7.52	3.53	14.58	7.59
2-204	9.12	3.53	16.18	9.22
2-205	10.69	3.53	17.75	10.8
2-206	12.29	3.53	19.35	12.42
2-207	13.87	3.53	20.93	14
2-208	15.47	3.53	22.53	15.62
2-209	17.04	3.53	24.1	17.2
2-210	18.64	3.53	25.7	18.82
2-211	20.22	3.53	27.28	20.42
2-212	21.82	3.53	28.88	22.05
2-213	23.39	3.53	30.45	23.62
2-214	24.99	3.53	32.05	25.25
2-215	26.57	3.53	33.63	26.82
2-216	28.17	3.53	35.23	28.45
2-217	29.74	3.53	36.8	30.05
2-218	31.34	3.53	38.4	31.65
2-219	32.92	3.53	39.98	33.25
2-220	34.52	3.53	41.58	34.87
2-221	36.09	3.53	43.18	36.45
2-222	37.69	3.53	44.75	38.07
2-223	40.87	3.53	47.93	41.28
2-224	44.04	3.53	51.1	44.48
2-225	47.22	3.53	54.28	47.7
2-226	50.39	3.53	57.45	50.9
2-227	53.57	3.53	60.63	54.1
2-228	56.74	3.53	63.8	57.3
2-229	59.92	3.53	66.98	60.53
2-230	63.09	3.53	70.15	63.73
2-231	66.27	3.53	73.33	66.93
2-232	69.44	3.53	76.5	70.13
2-233	72.62	3.53	79.68	73.36
2-234	75.79	3.53	82.85	76.56
2-235	78.97	3.53	86.03	79.76
2-236	82.14	3.53	89.2	82.96
2-237	85.32	3.53	92.38	86.18
2-238	88.49	3.53	95.55	89.38
2-239	91.67	3.53	98.73	92.58
2-240	94.84	3.53	101.9	95.73

Tel: +45 63 12 83 00 | Email: ps@hymatik.com | www.hymatik.com | Hvidkaervej 27a, DK-5250 Odense SV, Denmark

3 Design recommendations

Parker no.	d_1	d_2	d_7 H9 Internal Pressure	d_8 h9 External Pressure
2-241	98.02	3.53	105.08	99.01
2-242	101.19	3.53	108.25	102.2
2-243	104.37	3.53	111.43	105.41
2-244	107.54	3.53	114.6	108.61
2-245	110.72	3.53	117.78	111.83
2-246	113.89	3.53	120.95	115.03
2-247	117.07	3.53	124.13	118.23
2-248	120.24	3.53	127.3	121.43
2-249	123.42	3.53	130.48	124.66
2-250	126.59	3.53	133.65	127.86
2-251	129.77	3.53	136.83	131.06
2-252	132.94	3.53	140	134.26
2-253	136.12	3.53	143.18	137.49
2-254	139.29	3.53	146.35	140.69
2-255	142.47	3.53	149.53	143.89
2-256	145.64	3.53	152.7	147.09
2-257	148.82	3.53	155.88	150.31
2-258	151.99	3.53	159.05	153.51
2-259	158.34	3.53	165.4	159.86
2-260	164.69	3.53	171.75	166.21
2-261	171.04	3.53	178.1	172.56
2-262	177.39	3.53	184.45	178.91
2-263	183.74	3.53	190.8	185.26
2-264	190.09	3.53	197.15	191.61
2-265	196.44	3.53	203.5	197.96
2-266	202.79	3.53	209.85	204.31
2-267	209.14	3.53	216.2	210.66
2-268	215.49	3.53	222.55	217.01
2-269	221.84	3.53	228.9	223.36
2-270	228.19	3.53	235.25	229.71
2-271	234.54	3.53	241.6	233.06
2-272	240.89	3.53	247.95	241.42
2-273	247.24	3.53	254.3	248.76
2-274	253.59	3.53	260.65	255.11
2-275	266.29	3.53	273.35	267.81
2-276	278.99	3.53	286.05	280.51
2-277	291.69	3.53	298.75	293.21
2-278	304.39	3.53	311.45	305.91
2-279	329.79	3.53	336.85	331.31
2-280	355.19	3.53	362.25	356.71
2-281	380.59	3.53	387.65	382.11
2-282	405.26	3.53	413.05	406.78
2-283	430.68	3.53	438.45	432.18
2-284	456.06	3.53	463.85	457.58
2-309	10.46	5.33	21.13	10.57
2-310	12.07	5.33	22.73	12.19
2-311	13.64	5.33	24.31	13.77
2-312	15.24	5.33	25.91	15.39

Parker no.	d_1	d_2	d_7 H9 Internal Pressure	d_8 h9 External Pressure
2-313	16.81	5.33	27.48	16.99
2-314	18.42	5.33	29.08	18.59
2-315	19.99	5.33	30.66	20.19
2-316	21.59	5.33	32.26	21.82
2-317	23.16	5.33	33.83	23.39
2-318	24.77	5.33	35.43	25.02
2-319	26.34	5.33	37.01	26.59
2-320	27.94	5.33	38.61	28.22
2-321	29.51	5.33	40.18	29.82
2-322	31.12	5.33	41.78	31.42
2-323	32.69	5.33	43.36	33.02
2-324	34.29	5.33	44.96	34.65
2-325	37.47	5.33	48.13	37.85
2-326	40.64	5.33	51.31	41.05
2-327	43.82	5.33	54.48	44.25
2-328	46.99	5.33	57.66	47.47
2-329	50.17	5.33	60.83	50.67
2-330	53.34	5.33	64.01	53.87
2-331	56.52	5.33	67.18	57.07
2-332	59.69	5.33	70.36	60.3
2-333	62.87	5.33	73.53	63.5
2-334	66.04	5.33	76.71	66.7
2-335	69.22	5.33	79.88	69.9
2-336	72.39	5.33	83.06	73.13
2-337	75.57	5.33	86.23	76.33
2-338	78.74	5.33	89.41	79.53
2-339	81.92	5.33	92.58	82.73
2-340	85.09	5.33	95.76	85.95
2-341	88.27	5.33	98.93	89.15
2-342	91.44	5.33	102.1	92.35
2-343	94.62	5.33	105.28	95.55
2-344	97.79	5.33	108.45	98.78
2-345	100.97	5.33	111.63	101.98
2-346	104.14	5.33	114.8	105.18
2-347	107.32	5.33	117.98	108.38
2-348	110.49	5.33	119.38	111.6
2-349	113.67	5.33	124.33	114.8
2-350	116.84	5.33	127.5	118
2-351	120.02	5.33	130.68	121.2
2-352	123.19	5.33	133.85	124.43
2-353	126.37	5.33	137.03	127.63
2-354	129.54	5.33	140.81	130.83
2-355	132.72	5.33	143.38	134.03
2-356	135.89	5.33	146.56	137.26
2-357	139.07	5.33	149.73	140.46
2-358	142.24	5.33	152.9	143.64
2-359	145.42	5.33	156.08	146.86
2-360	148.59	5.33	159.25	150.08

Tel: +45 63 12 83 00 | Email: ps@hymatik.com | www.hymatik.com | Hvidkaervej 27a, DK-5250 Odense SV, Denmark

3 Design recommendations

Parker no.	d_1	d_2	d_7 H9 Internal Pressure	d_8 h9 External Pressure
2-361	151.77	5.33	162.43	153.28
2-362	158.12	5.33	168.78	159.63
2-363	164.47	5.33	175.13	165.98
2-364	170.82	5.33	181.48	172.33
2-365	177.17	5.33	187.83	178.68
2-366	183.52	5.33	194.18	185.03
2-367	189.87	5.33	200.53	191.38
2-368	196.22	5.33	206.88	197.73
2-369	202.57	5.33	213.23	204.08
2-370	208.92	5.33	219.58	210.43
2-371	215.27	5.33	225.93	216.78
2-372	221.62	5.33	232.28	223.13
2-373	227.97	5.33	238.63	229.48
2-374	234.32	5.33	244.98	235.83
2-375	240.67	5.33	251.33	242.18
2-376	247.02	5.33	257.68	248.53
2-377	253.37	5.33	264.03	254.88
2-378	266.07	5.33	276.73	267.58
2-379	278.77	5.33	289.43	280.28
2-380	291.47	5.33	302.13	292.98
2-381	304.17	5.33	314.83	305.68
2-382	329.57	5.33	340.23	331.08
2-383	354.97	5.33	365.63	356.48
2-384	380.37	5.33	391.03	381.88
2-385	405.26	5.33	415.92	406.78
2-386	430.66	5.33	441.32	432.18
2-387	456.06	5.33	466.72	457.58
2-388	481.38	5.33	492.07	482.9
2-389	506.78	5.33	517.47	508.3
2-390	532.18	5.33	542.87	533.7
2-391	557.58	5.33	568.27	559.1
2-392	582.68	5.33	593.34	584.2
2-393	608.08	5.33	618.74	609.6
2-394	633.48	5.33	644.14	635
2-395	658.88	5.33	669.54	660.4
2-425	113.67	6.99	127.63	114.8
2-426	116.84	6.99	130.81	118
2-427	120.02	6.99	133.98	121.2
2-428	123.19	6.99	137.16	124.43
2-429	126.37	6.99	140.33	127.63
2-430	129.54	6.99	143.51	130.83
2-431	132.72	6.99	146.68	134.03
2-432	135.89	6.99	149.86	137.26
2-433	139.07	6.99	153.03	140.46
2-434	142.24	6.99	156.21	143.66
2-435	145.42	6.99	159.38	146.86
2-436	148.59	6.99	162.56	150.08
2-437	151.77	6.99	165.73	153.28

Parker no.	d_1	d_2	d_7 H9 Internal Pressure	d_8 h9 External Pressure
2-438	158.12	6.99	172.06	159.63
2-439	164.47	6.99	178.43	165.98
2-440	170.82	6.99	184.78	172.33
2-441	177.17	6.99	191.13	178.68
2-442	183.52	6.99	197.48	185.03
2-443	189.87	6.99	203.83	191.38
2-444	196.22	6.99	210.18	197.73
2-445	202.57	6.99	216.53	204.08
2-446	215.27	6.99	229.23	216.78
2-447	227.97	6.99	241.93	229.48
2-448	240.67	6.99	254.63	242.18
2-449	253.37	6.99	267.33	254.88
2-450	266.07	6.99	280.03	267.58
2-451	278.77	6.99	292.73	280.28
2-452	291.47	6.99	305.43	292.98
2-453	304.17	6.99	318.13	305.68
2-454	316.87	6.99	330.83	318.38
2-455	329.57	6.99	343.53	331.08
2-456	342.27	6.99	356.23	343.78
2-457	354.97	6.99	368.93	356.48
2-458	367.67	6.99	381.63	369.18
2-459	380.37	6.99	394.33	381.88
2-460	393.07	6.99	407.03	394.58
2-461	405.26	6.99	419.22	406.78
2-462	417.96	6.99	431.92	419.48
2-463	430.66	6.99	444.62	432.18
2-464	443.36	6.99	457.32	444.88
2-465	456.06	6.99	470.02	457.58
2-466	468.76	6.99	482.72	470.28
2-467	481.46	6.99	495.42	482.98
2-468	494.16	6.99	508.12	495.68
2-469	506.86	6.99	520.82	508.38
2-470	532.26	6.99	546.22	533.78
2-471	557.66	6.99	571.62	559.18
2-472	582.68	6.99	596.64	584.2
2-473	608.08	6.99	622.05	608.2
2-474	633.48	6.99	647.44	635
2-475	658.88	6.99	672.84	660.4

Tab. 3.6

Tel: +45 63 12 83 00 | Email: ps@hymatik.com | www.hymatik.com | Hvidkaervej 27a, DK-5250 Odense SV, Denmark

3 Design recommendations

3.2 Dynamic sealing

For dynamic seals, our recommendations refer to the diameter range and are dependent upon the cross-section thickness. The dynamic application of O-Rings over 250 mm diameter is not recommended.

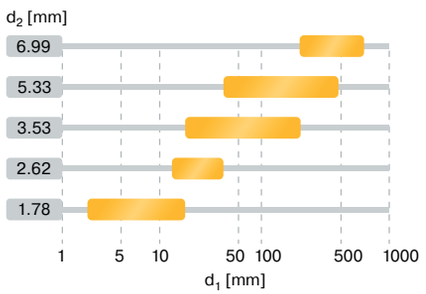

Fig. 3.8 Recommended inside diameter range d_1 for O-Rings vary according to cross-section d_2

3.2.1 Hydraulic – compression and design dimensions

Piston seal – radial compression
O-Ring assembly in inside element

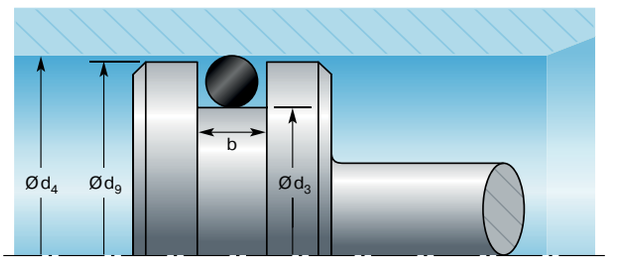

Fig. 3.9 Piston seal – radial compression

Rod seal – radial compression
O-Ring assembly in outside element

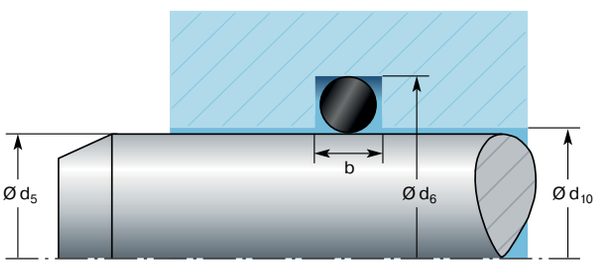

Fig. 3.10 Rod seal – radial compression

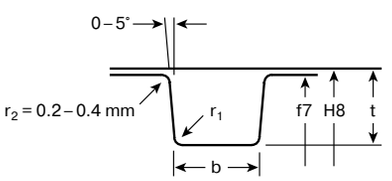

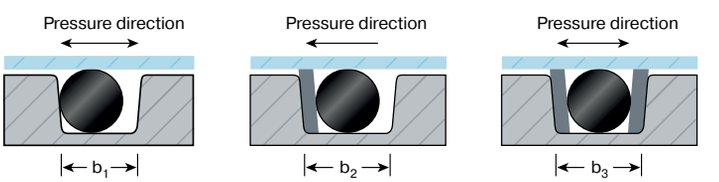

Cross-section d_2	Gland depth t	Compression	Compression	Groove width b_1 without anti-extrusion ring	Groove width b_2 one anti-extrusion ring	Groove width b_3 two anti-extrusion rings	Radius r_1
[mm]	[mm]	[mm]	[%]	[mm]	[mm]	[mm]	[mm]
1.78 ±0.08	1.45	0.16 - 0.45	9 - 25	2.40 - 2.60	3.50 - 3.70	4.60 - 4.80	0.20 - 0.40
2.62 ±0.09	2.20	0.26 - 0.64	10 - 23	3.60 - 3.80	4.70 - 4.90	5.80 - 6.00	0.20 - 0.40
3.53 ±0.10	3.05	0.27 - 0.70	8 - 19	4.80 - 5.00	5.80 - 6.00	6.80 - 7.00	0.40 - 0.80
5.33 ±0.13	4.65	0.37 - 0.93	7 - 17	7.20 - 7.40	8.70 - 8.90	10.20 - 10.40	0.40 - 0.80
6.99 ±0.15	6.20	0.50 - 1.05	7 - 15	9.60 - 9.80	12.00 - 12.20	14.40 - 14.60	0.40 - 0.80

Tab. 3.7

Tel: +45 63 12 83 00 | Email: ps@hymatik.com | www.hymatik.com | Hvidkaervej 27a, DK-5250 Odense SV, Denmark

3 Design recommendations

3.2.2 Hydraulic – piston seal dynamic

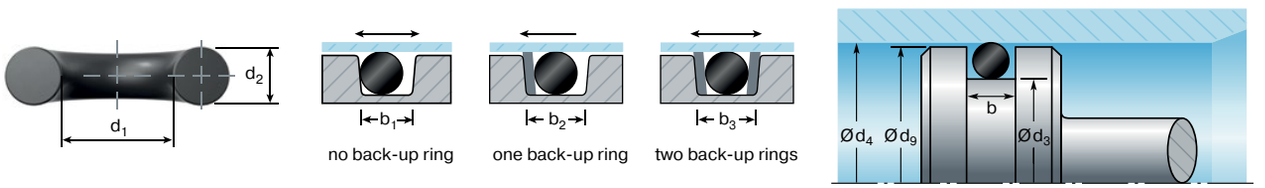

Fig. 3.11

Parker no.	d_1	d_2	b_1 0.25 0	b_2 0.25 0	b_3 0.25 0	d_4/d_9 H8/f7	d_3	Tol.
2-006	2.9	1.78	2.8	4.2	5.6	5.74	3.05	h6
2-007	3.68	1.78	2.8	4.2	5.6	6.52	3.83	h6
2-008	4.47	1.78	2.8	4.2	5.6	7.31	4.62	h6
2-009	5.28	1.78	2.8	4.2	5.6	8.14	5.45	h6
2-010	6.07	1.78	2.8	4.2	5.6	8.93	6.24	h6
2-011	7.65	1.78	2.8	4.2	5.6	10.56	7.87	h6
2-012	9.25	1.78	2.8	4.2	5.6	12.22	9.54	h8
2-104	2.84	2.62	3.8	5.2	6.6	7.08	2.99	h6
2-105	3.63	2.62	3.8	5.2	6.6	7.87	3.78	h6
2-106	4.42	2.62	3.8	5.2	6.6	8.66	4.57	h6
2-107	5.23	2.62	3.8	5.2	6.6	9.47	5.38	h6
2-108	6.02	2.62	3.8	5.2	6.6	10.27	6.17	h6
2-109	7.59	2.62	3.8	5.2	6.6	11.84	7.76	h8
2-110	9.19	2.62	3.8	5.2	6.6	13.56	9.48	h8
2-111	10.77	2.62	3.8	5.2	6.6	15.16	11.09	h8
2-112	12.37	2.62	3.8	5.2	6.6	16.79	12.71	h8
2-113	13.94	2.62	3.8	5.2	6.6	18.43	14.36	h8
2-114	15.54	2.62	3.8	5.2	6.6	20.11	16.03	h8
2-115	17.12	2.62	3.8	5.2	6.6	21.71	17.64	h8
2-116	18.72	2.62	3.8	5.2	6.6	23.33	19.27	h8
2-210	18.64	3.53	5	6.4	7.8	24.97	19.32	h9
2-211	20.22	3.53	5	6.4	7.8	26.56	20.93	h9
2-212	21.82	3.53	5	6.4	7.8	28.21	22.64	h9
2-213	23.39	3.53	5	6.4	7.8	29.81	24.24	h9
2-214	24.99	3.53	5	6.4	7.8	31.44	25.87	h9
2-215	26.57	3.53	5	6.4	7.8	33.06	27.49	h9
2-216	28.17	3.53	5	6.4	7.8	34.74	29.17	h9
2-217	29.74	3.53	5	6.4	7.8	36.34	30.8	h9
2-218	31.34	3.53	5	6.4	7.8	37.97	32.43	h9
2-219	32.92	3.53	5	6.4	7.8	39.58	34.04	h9
2-220	34.52	3.53	5	6.4	7.8	41.22	35.68	h9
2-221	36.09	3.53	5	6.4	7.8	42.82	37.28	h9
2-222	37.69	3.53	5	6.4	7.8	44.53	38.99	h9
2-309	10.46	5.33	7.2	9	10.9	19.5	10.84	h9
2-310	12.07	5.33	7.2	9	10.9	21.14	12.49	h9
2-311	13.64	5.33	7.2	9	10.9	22.8	14.14	h9

Parker no.	d_1	d_2	b_1 0.25 0	b_2 0.25 0	b_3 0.25 0	d_4/d_9 H8/f7	d_3	Tol.
2-312	15.24	5.33	7.2	9	10.9	24.48	15.82	h9
2-313	16.81	5.33	7.2	9	10.9	26.08	17.42	h9
2-314	18.42	5.33	7.2	9	10.9	27.74	19.1	h9
2-315	19.99	5.33	7.2	9	10.9	29.34	20.7	h9
2-316	21.59	5.33	7.2	9	10.9	30.98	22.41	h9
2-317	23.16	5.33	7.2	9	10.9	32.58	24.01	h9
2-318	24.77	5.33	7.2	9	10.9	34.22	25.65	h9
2-319	26.34	5.33	7.2	9	10.9	35.82	27.25	h9
2-320	27.94	5.33	7.2	9	10.9	37.5	28.93	h9
2-321	29.51	5.33	7.2	9	10.9	39.11	30.57	h9
2-322	31.12	5.33	7.2	9	10.9	40.75	32.21	h9
2-323	32.69	5.33	7.2	9	10.9	42.35	33.81	h9
2-324	34.29	5.33	7.2	9	10.9	43.98	35.44	h9
2-325	37.47	5.33	7.2	9	10.9	47.31	38.77	h9
2-326	40.64	5.33	7.2	9	10.9	50.54	42	h9
2-327	43.82	5.33	7.2	9	10.9	53.78	45.24	h9
2-328	46.99	5.33	7.2	9	10.9	57.02	48.48	h9
2-329	50.17	5.33	7.2	9	10.9	60.34	51.83	h9
2-330	53.34	5.33	7.2	9	10.9	63.58	55.07	h9
2-331	56.52	5.33	7.2	9	10.9	66.82	58.31	h9
2-332	59.69	5.33	7.2	9	10.9	70.05	61.54	h9
2-333	62.87	5.33	7.2	9	10.9	73.35	64.84	h9
2-334	66.04	5.33	7.2	9	10.9	76.58	68.07	h9
2-335	69.22	5.33	7.2	9	10.9	79.82	71.31	h9
2-336	72.39	5.33	7.2	9	10.9	83.06	74.55	h9
2-337	75.57	5.33	7.2	9	10.9	86.4	77.89	h9
2-338	78.74	5.33	7.2	9	10.9	89.64	81.16	h9
2-339	81.92	5.33	7.2	9	10.9	92.88	84.4	h9
2-340	85.09	5.33	7.2	9	10.9	96.11	87.63	h9
2-341	88.27	5.33	7.2	9	10.9	99.36	90.88	h9
2-342	91.44	5.33	7.2	9	10.9	102.69	94.21	h9
2-343	94.62	5.33	7.2	9	10.9	105.94	97.46	h9
2-344	97.79	5.33	7.2	9	10.9	109.17	100.69	h9
2-345	100.97	5.33	7.2	9	10.9	112.41	103.93	h9
2-346	104.14	5.33	7.2	9	10.9	115.65	107.17	h9
2-347	107.32	5.33	7.2	9	10.9	118.94	110.46	h9

Tel: +45 63 12 83 00 | Email: ps@hymatik.com | www.hymatik.com | Hvidkaervej 27a, DK-5250 Odense SV, Denmark

3 Design recommendations

Parker no.	d_1	d_2	b_1 0.25 0	b_2 0.25 0	b_3 0.25 0	d_4/d_9 H8/f7	d_3 Tol.	
2-348	110.49	5.33	7.2	9	10.9	122.18	113.7	h9
2-349	113.67	5.33	7.2	9	10.9	125.42	116.94	h9
2-425	113.67	6.99	9.5	12.3	15.1	128.5	117.02	h9
2-426	116.84	6.99	9.5	12.3	15.1	131.73	120.28	h9
2-427	120.02	6.99	9.5	12.3	15.1	134.98	123.53	h9
2-428	123.19	6.99	9.5	12.3	15.1	138.21	126.76	h9
2-429	126.37	6.99	9.5	12.3	15.1	141.56	130.11	h9
2-430	129.54	6.99	9.5	12.3	15.1	144.79	133.34	h9
2-431	132.72	6.99	9.5	12.3	15.1	148.03	136.58	h9
2-432	135.89	6.99	9.5	12.3	15.1	151.27	139.82	h9
2-433	139.07	6.99	9.5	12.3	15.1	154.51	143.06	h9
2-434	142.24	6.99	9.5	12.3	15.1	157.74	146.29	h9
2-435	145.42	6.99	9.5	12.3	15.1	160.99	149.54	h9
2-436	148.59	6.99	9.5	12.3	15.1	164.22	152.77	h9
2-437	151.77	6.99	9.5	12.3	15.1	167.46	156.01	h9
2-438	158.12	6.99	9.5	12.3	15.1	174.02	162.57	h9
2-439	164.47	6.99	9.5	12.3	15.1	180.5	169.05	h9
2-440	170.82	6.99	9.5	12.3	15.1	186.98	175.53	h9
2-441	177.17	6.99	9.5	12.3	15.1	193.45	182.04	h9
2-442	183.52	6.99	9.5	12.3	15.1	200.05	188.64	h9
2-443	189.87	6.99	9.5	12.3	15.1	206.53	195.12	h9
2-444	196.22	6.99	9.5	12.3	15.1	213.01	201.6	h9
2-445	202.57	6.99	9.5	12.3	15.1	219.48	208.07	h9
2-446	215.27	6.99	9.5	12.3	15.1	232.7	221.29	h9
2-447	227.97	6.99	9.5	12.3	15.1	245.66	234.25	h9
2-448	240.67	6.99	9.5	12.3	15.1	258.61	247.2	h9
2-449	253.37	6.99	9.5	12.3	15.1	271.57	260.19	h9
2-450	266.07	6.99	9.5	12.3	15.1	284.64	273.26	h9
2-451	278.77	6.99	9.5	12.3	15.1	297.6	286.22	h9
2-452	291.47	6.99	9.5	12.3	15.1	310.55	299.17	h9
2-453	304.17	6.99	9.5	12.3	15.1	323.5	312.32	h9
2-454	316.87	6.99	9.5	12.3	15.1	336.46	325.12	h9
2-455	329.57	6.99	9.5	12.3	15.1	349.41	338.07	h9
2-456	342.27	6.99	9.5	12.3	15.1	362.63	351.29	h9
2-457	354.97	6.99	9.5	12.3	15.1	375.59	364.25	h9
2-458	367.67	6.99	9.5	12.3	15.1	388.54	377.2	h9
2-459	380.37	6.99	9.5	12.3	15.1	401.49	390.15	h9
2-460	393.07	6.99	9.5	12.3	15.1	414.45	403.15	h9

Tab. 3.8

Parker no.	d_1	d_2	b1 0.25 0	b2 0.25 0	b_3 0.25 0	d4 / d9 H8 / f7	d_3 h9
2-014	12.42	1.78	2.8	4.2	5.6	16	13.2
2-114	15.54	2.62	3.8	5.2	6.6	20	15.8
2-117	20.3	2.62	3.8	5.2	6.6	25	20.8
2-121	26.64	2.62	3.8	5.2	6.6	32	27.8
2-224	34.59	2.62	3.8	5.2	6.6	40	35.8
2-126	44.04	3.53	5	6.4	7.8	50	44.4
2-233	72.62	3.53	5	6.4	7.8	80	74.4
2-236	82.14	3.53	5	6.4	7.8	90	84.4
2-439	164.47	6.99	9.5	12.3	15.1	180	168.2
2-442	183.52	6.99	9.5	12.3	15.1	200	188.2
2-445	202.57	6.99	9.5	12.3	15.1	220	208.2
2-447	227.97	6.99	9.5	12.3	15.1	250	238.2
2-450	266.07	6.99	9.5	12.3	15.1	280	268.2
2-453	304.17	6.99	9.5	12.3	15.1	320	308.2
2-456	342.27	6.99	9.5	12.3	15.1	360	348.2
2-459	380.38	6.99	9.5	12.3	15.1	400	388.2
2-463	430.66	6.99	9.5	12.3	15.1	450	438.2
2-467	481.46	6.99	9.5	12.3	15.1	500	488.2

Tab. 3.9 Basic dimensions of O-ring grooves for use in dynamic piston seals of selected metric sizes in hydraulic applications.

Tel: +45 63 12 83 00 | Email: ps@hymatik.com | www.hymatik.com | Hvidkaervej 27a, DK-5250 Odense SV, Denmark

3 Design recommendations

3.2.3 Hydraulic – rod seal dynamic

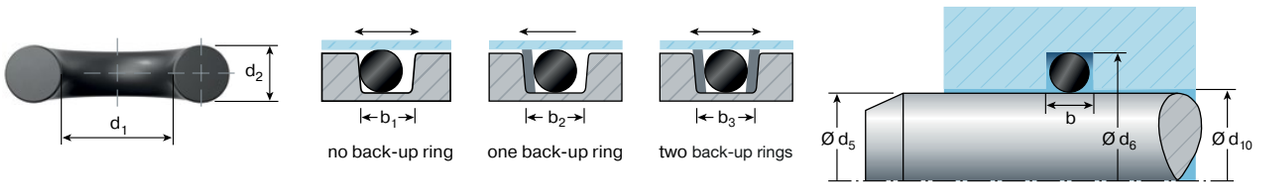

Fig. 3.12

Parker no.	d_1	d_2	b_1 +0,25 0	b_2 +0,25 0	b_3 +0,25 0	d_5/d_{10} f7/H8	d_6 H9
2-006	2.9	1.78	2.8	4.2	5.6	3.16	5.85
2-007	3.68	1.78	2.8	4.2	5.6	3.87	6.62
2-008	4.47	1.78	2.8	4.2	5.6	4.7	7.46
2-009	5.28	1.78	2.8	4.2	5.6	5.5	8.29
2-010	6.07	1.78	2.8	4.2	5.6	6.3	9.09
2-011	7.65	1.78	2.8	4.2	5.6	8	10.78
2-012	9.25	1.78	2.8	4.2	5.6	9.5	12.31
2-104	2.84	2.62	3.8	5.2	6.6	3.03	7.16
2-105	3.63	2.62	3.8	5.2	6.6	3.85	8.02
2-106	4.42	2.62	3.8	5.2	6.6	4.65	8.85
2-107	5.23	2.62	3.8	5.2	6.6	5.5	9.72
2-108	6.02	2.62	3.8	5.2	6.6	6.3	10.53
2-109	7.59	2.62	3.8	5.2	6.6	8	12.22
2-110	9.19	2.62	3.8	5.2	6.6	9.5	13.75
2-111	10.77	2.62	3.8	5.2	6.6	11.2	15.46
2-112	12.37	2.62	3.8	5.2	6.6	12.8	17
2-113	13.94	2.62	3.8	5.2	6.6	14.5	18.7
2-114	15.54	2.62	3.8	5.2	6.6	16	20.25
2-115	17.12	2.62	3.8	5.2	6.6	17.7	21.9
2-116	18.72	2.62	3.8	5.2	6.6	19.3	23.5
2-210	18.64	3.53	5	6.4	7.8	19.3	25
2-211	20.22	3.53	5	6.4	7.8	21	26.7
2-212	21.82	3.53	5	6.4	7.8	22.5	28.48
2-213	23.39	3.53	5	6.4	7.8	24.1	29.9
2-214	24.99	3.53	5	6.4	7.8	25.7	31.5
2-215	26.57	3.53	5	6.4	7.8	27.2	32.9
2-216	28.17	3.53	5	6.4	7.8	28.8	34.6
2-217	29.74	3.53	5	6.4	7.8	30.4	36.2
2-218	31.34	3.53	5	6.4	7.8	32	37.8
2-219	32.92	3.53	5	6.4	7.8	33.6	39.4
2-220	34.52	3.53	5	6.4	7.8	35.3	41
2-221	36.09	3.53	5	6.4	7.8	36.8	42.5
2-222	37.69	3.53	5	6.4	7.8	38.5	44.1
2-325	37.47	5.33	7.2	9	10.9	38.5	47.4
2-326	40.64	5.33	7.2	9	10.9	41.5	50.4
2-327	43.82	5.33	7.2	9	10.9	45	53.75
2-328	46.99	5.33	7.2	9	10.9	48	56.9
2-329	50.17	5.33	7.2	9	10.9	51.2	60
2-330	53.34	5.33	7.2	9	10.9	54.4	63.2
2-331	56.52	5.33	7.2	9	10.9	57.55	66.38
2-335	69.22	5.33	7.2	9	10.9	70.4	79
2-336	72.39	5.33	7.2	9	10.9	73.61	82.19

Tab. 3.10

Parker no.	d_1	d_2	b_1 +0,25 0	b_2 +0,25 0	b_3 +0,25 0	d_5/d_{10} f7/H8	d_6 H9
rd2-010	6.07	1.78	2.8	4.2	5.6	6	8.8
rd2-011	7.65	1.78	2.8	4.2	5.6	8	10.7
rd2-013	10.92	1.78	2.8	4.2	5.6	10	12.8
rd2-014	12.42	1.78	2.8	4.2	5.6	12	14.8
rd2-015	14	1.78	2.8	4.2	5.6	14	16.8
rd2-018	15.6	1.78	2.8	4.2	5.6	16	18.7
rd2-117	18.77	1.78	2.8	4.2	5.6	18	20.8
rd2-118	20.3	2.62	3.8	5.2	6.6	20	24.2
rd2-120	21.89	2.62	3.8	5.2	6.6	22	26.2
rd2-122	25.07	2.62	3.8	5.2	6.6	25	29.2
rd2-125	28.24	2.62	3.8	5.2	6.6	28	32.2
rd2-224	32.99	2.62	3.8	5.2	6.6	32	36.2
rd2-329	50.17	5.33	7.2	9	10.9	50	59.1
rd2-333	62.87	5.33	7.2	9	10.9	63	72.1
rd2-335	69.22	5.33	7.2	9	10.9	70	79.1
rd2-339	81.92	5.33	7.2	9	10.9	80	89.1
rd2-342	91.44	5.33	7.2	9	10.9	90	991
rd2-345	100.97	5.33	7.2	9	10.9	100	109.1
rd2-348	110.49	5.33	7.2	9	10.9	110	119.1
rd2-429	126.37	6.99	9.5	12.3	15.1	125	136.8
rd2-433	139.07	6.99	9.5	12.3	15.1	140	151.8
rd2-438	158.12	6.99	9.5	12.3	15.1	160	171.8
rd2-442	183.52	6.99	9.5	12.3	15.1	180	191.8
rd2-445	202.57	6.99	9.5	12.3	15.1	200	211.8
rd2-447	227.97	6.99	9.5	12.3	15.1	220	231.8
rd2-449	253.37	6.99	9.5	12.3	15.1	250	261.8
rd2-451	278.77	6.99	9.5	12.3	15.1	280	291.8
rd2-455	329.57	6.99	9.5	12.3	15.1	320	331.8
rd2-458	367.67	6.99	9.5	12.3	15.1	360	371.8

Tab. 3.11 Basic dimensions of O-ring grooves for use in dynamic rod seals of selected metric sizes in hydraulic applications.

Tel: +45 63 12 83 00 | Email: ps@hymatik.com | www.hymatik.com | Hvidkaervej 27a, DK-5250 Odense SV, Denmark

3.2.4 Pneumatic – compression and design dimensions

Piston seal – radial compression
O-Ring assembly in inside element

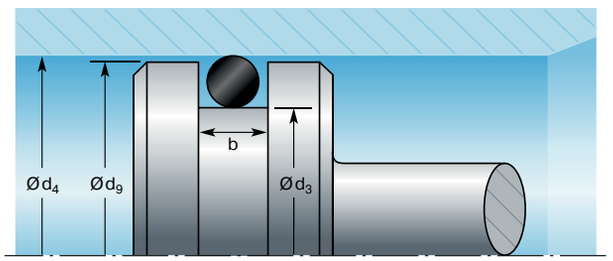

Fig. 3.13 Piston seal – radial compression

Rod seal – radial compression
O-Ring assembly in outside element

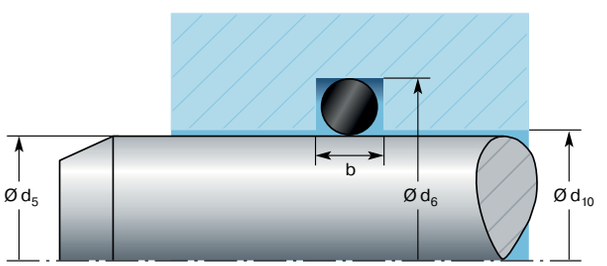

Fig. 3.14 Rod seal – radial compression

Floating design – no compression

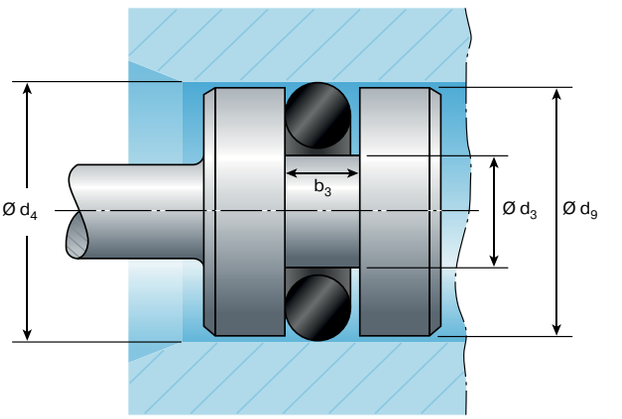

Fig. 3.15 Floating design – no deformation

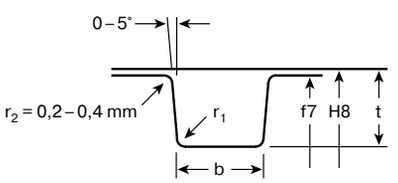

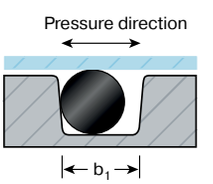

Cross-section d_2	Gland depth t	Compression	Compression	Groove width b_1 without anti-extrusion ring	Radius r_1
[mm]	[mm]	[mm]	[%]	[mm]	[mm]
1,78 ±0.08	1.55	0.07 - 0.43	4 - 23	2.40 - 2.60	0.20 - 0.40
2,62 ±0.08	2.35	0.11 - 0.49	4 - 18	3.60 - 3.80	0.20 - 0.40
3,53 ±0.10	3.15	0.15 - 0.60	4 - 16	4.80 - 5.00	0.40 - 0.80
5,33 ±0.13	4.85	0.22 - 0.73	4 - 13	7.20 - 7.40	0.40 - 0.80
6,99 ±0.15	6.40	0.30 - 0.75	4 - 10	9.60 - 9.80	0.40 - 0.80

Tab. 3.12

Tel: +45 63 12 83 00 | Email: ps@hymatik.com | www.hymatik.com | Hvidkaervej 27a, DK-5250 Odense SV, Denmark

3 Design recommendations

3.2.5 Pneumatic – piston seal dynamic

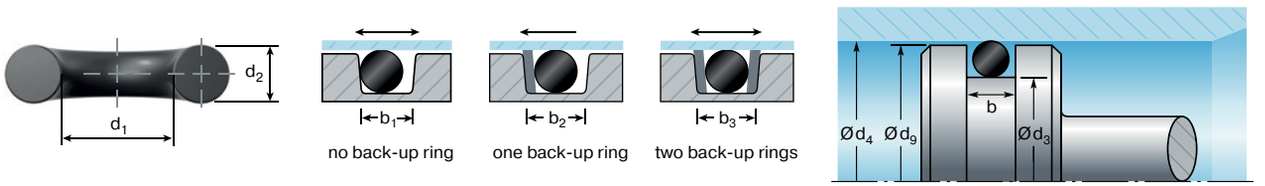

Fig. 3.16

Parker no.	d_1	d_2	b_1 0.25 0	b_2 0.25 0	b_3 0.25 0	d_4/d_9 H8/f7	d_3	Tol.
2-006	2.9	1.78	2.8	4.2	5.6	5.85	3.05	h6
2-007	3.68	1.78	2.8	4.2	5.6	6.63	3.84	h6
2-008	4.47	1.78	2.8	4.2	5.6	7.42	4.63	h6
2-009	5.28	1.78	2.8	4.2	5.6	8.24	5.45	h6
2-010	6.07	1.78	2.8	4.2	5.6	9.06	6.27	h6
2-011	7.65	1.78	2.8	4.2	5.6	10.66	7.87	h6
2-012	9.25	1.78	2.8	4.2	5.6	12.27	9.5	h8
2-104	2.84	2.62	3.8	5.2	6.6	7.28	2.99	h6
2-105	3.63	2.62	3.8	5.2	6.6	8.08	3.79	h6
2-106	4.42	2.62	3.8	5.2	6.6	8.87	4.58	h6
2-107	5.23	2.62	3.8	5.2	6.6	9.69	5.39	h6
2-108	6.02	2.62	3.8	5.2	6.6	10.51	6.22	h6
2-109	7.59	2.62	3.8	5.2	6.6	12.1	7.82	h8
2-110	9.19	2.62	3.8	5.2	6.6	13.71	9.44	h8
2-111	10.77	2.62	3.8	5.2	6.6	15.31	11.04	h8
2-112	12.37	2.62	3.8	5.2	6.6	16.93	12.65	h8
2-113	13.94	2.62	3.8	5.2	6.6	18.56	14.29	h8
2-114	15.54	2.62	3.8	5.2	6.6	20.23	15.95	h8
2-115	17.12	2.62	3.8	5.2	6.6	21.82	17.55	h8
2-116	18.72	2.62	3.8	5.2	6.6	23.44	19.17	h8
2-210	18.64	3.53	5	6.4	7.8	25.17	19.32	h9
2-211	20.22	3.53	5	6.4	7.8	26.78	20.93	h9
2-212	21.82	3.53	5	6.4	7.8	28.41	22.64	h9
2-213	23.39	3.53	5	6.4	7.8	30.01	24.24	h9
2-214	24.99	3.53	5	6.4	7.8	31.64	25.87	h9
2-215	26.57	3.53	5	6.4	7.8	33.26	27.49	h9
2-216	28.17	3.53	5	6.4	7.8	34.94	29.17	h9
2-217	29.74	3.53	5	6.4	7.8	36.54	30.8	h9
2-218	31.34	3.53	5	6.4	7.8	38.17	32.43	h9
2-219	32.92	3.53	5	6.4	7.8	39.78	34.04	h9
2-220	34.52	3.53	5	6.4	7.8	41.42	35.68	h9
2-221	36.09	3.53	5	6.4	7.8	43.02	37.28	h9
2-222	37.69	3.53	5	6.4	7.8	44.73	38.99	h9
2-309	10.46	5.33	7.2	9	10.9	19.5	10.84	h9
2-310	12.07	5.33	7.2	9	10.9	21.14	12.49	h9
2-311	13.64	5.33	7.2	9	10.9	22.8	14.14	h9

Parker no.	d_1	d_2	b_1 0.25 0	b_2 0.25 0	b_3 0.25 0	d_4/d_9 H8/f7	d_3	Tol.
2-312	15.24	5.33	7.2	9	10.9	24.48	15.82	h9
2-313	16.81	5.33	7.2	9	10.9	26.08	17.42	h9
2-314	18.42	5.33	7.2	9	10.9	27.74	19.1	h9
2-315	19.99	5.33	7.2	9	10.9	29.34	20.7	h9
2-316	21.59	5.33	7.2	9	10.9	30.98	22.41	h9
2-317	23.16	5.33	7.2	9	10.9	32.58	24.01	h9
2-318	24.77	5.33	7.2	9	10.9	34.22	25.65	h9
2-319	26.34	5.33	7.2	9	10.9	35.82	27.25	h9
2-320	27.94	5.33	7.2	9	10.9	37.5	28.93	h9
2-321	29.51	5.33	7.2	9	10.9	39.11	30.57	h9
2-322	31.12	5.33	7.2	9	10.9	40.75	32.21	h9
2-323	32.69	5.33	7.2	9	10.9	42.35	33.81	h9
2-324	34.29	5.33	7.2	9	10.9	43.98	35.44	h9
2-325	37.47	5.33	7.2	9	10.9	47.31	38.77	h9
2-326	40.64	5.33	7.2	9	10.9	50.54	42	h9
2-327	43.82	5.33	7.2	9	10.9	53.78	45.24	h9
2-328	46.99	5.33	7.2	9	10.9	57.02	48.48	h9
2-329	50.17	5.33	7.2	9	10.9	60.34	51.83	h9
2-330	53.34	5.33	7.2	9	10.9	63.58	55.07	h9
2-331	56.52	5.33	7.2	9	10.9	66.82	58.31	h9
2-332	59.69	5.33	7.2	9	10.9	70.05	61.54	h9
2-333	62.87	5.33	7.2	9	10.9	73.35	64.84	h9
2-334	66.04	5.33	7.2	9	10.9	76.58	68.07	h9
2-335	69.22	5.33	7.2	9	10.9	79.82	71.31	h9
2-336	72.39	5.33	7.2	9	10.9	83.06	74.55	h9
2-337	75.57	5.33	7.2	9	10.9	86.4	77.89	h9
2-338	78.74	5.33	7.2	9	10.9	89.64	81.16	h9
2-339	81.92	5.33	7.2	9	10.9	92.88	84.4	h9
2-340	85.09	5.33	7.2	9	10.9	96.11	87.63	h9
2-341	88.27	5.33	7.2	9	10.9	99.36	90.88	h9
2-342	91.44	5.33	7.2	9	10.9	102.69	94.21	h9
2-343	94.62	5.33	7.2	9	10.9	105.94	97.46	h9
2-344	97.79	5.33	7.2	9	10.9	109.17	100.69	h9
2-345	100.97	5.33	7.2	9	10.9	112.41	103.93	h9
2-346	104.14	5.33	7.2	9	10.9	115.65	107.17	h9
2-347	107.32	5.33	7.2	9	10.9	118.94	110.46	h9

Tel: +45 63 12 83 00 | Email: ps@hymatik.com | www.hymatik.com | Hvidkaervej 27a, DK-5250 Odense SV, Denmark

3 Design recommendations

Parker no.	d_1	d_2	b_1 0.25 0	b_2 0.25 0	b_3 0.25 0	d_4/d_9 H8/f7	d_3 Tol.	
2-348	110.49	5.33	7.2	9	10.9	122.18	113.7	h9
2-349	113.67	5.33	7.2	9	10.9	125.42	116.94	h9
2-425	113.67	6.99	9.5	12.3	15.1	128.5	117.02	h9
2-426	116.84	6.99	9.5	12.3	15.1	131.73	120.28	h9
2-427	120.02	6.99	9.5	12.3	15.1	134.98	123.53	h9
2-428	123.19	6.99	9.5	12.3	15.1	138.21	126.76	h9
2-429	126.37	6.99	9.5	12.3	15.1	141.56	130.11	h9
2-430	129.54	6.99	9.5	12.3	15.1	144.79	133.34	h9
2-431	132.72	6.99	9.5	12.3	15.1	148.03	136.58	h9
2-432	135.89	6.99	9.5	12.3	15.1	151.27	139.82	h9
2-433	139.07	6.99	9.5	12.3	15.1	154.51	143.06	h9
2-434	142.24	6.99	9.5	12.3	15.1	157.74	146.29	h9
2-435	145.42	6.99	9.5	12.3	15.1	160.99	149.54	h9
2-436	148.59	6.99	9.5	12.3	15.1	164.22	152.77	h9
2-437	151.77	6.99	9.5	12.3	15.1	167.46	156.01	h9
2-438	158.12	6.99	9.5	12.3	15.1	174.02	162.57	h9
2-439	164.47	6.99	9.5	12.3	15.1	180.5	169.05	h9
2-440	170.82	6.99	9.5	12.3	15.1	186.98	175.53	h9
2-441	177.17	6.99	9.5	12.3	15.1	193.45	182.04	h9
2-442	183.52	6.99	9.5	12.3	15.1	200.05	188.64	h9
2-443	189.87	6.99	9.5	12.3	15.1	206.53	195.12	h9
2-444	196.22	6.99	9.5	12.3	15.1	213.01	201.6	h9
2-445	202.57	6.99	9.5	12.3	15.1	219.48	208.07	h9
2-446	215.27	6.99	9.5	12.3	15.1	232.7	221.29	h9
2-447	227.97	6.99	9.5	12.3	15.1	245.66	234.25	h9
2-448	240.67	6.99	9.5	12.3	15.1	258.61	247.2	h9
2-449	253.37	6.99	9.5	12.3	15.1	271.57	260.19	h9
2-450	266.07	6.99	9.5	12.3	15.1	284.64	273.26	h9
2-451	278.77	6.99	9.5	12.3	15.1	297.6	286.22	h9
2-452	291.47	6.99	9.5	12.3	15.1	310.55	299.17	h9
2-453	304.17	6.99	9.5	12.3	15.1	323.5	312.32	h9
2-454	316.87	6.99	9.5	12.3	15.1	336.46	325.12	h9
2-455	329.57	6.99	9.5	12.3	15.1	349.41	338.07	h9
2-456	342.27	6.99	9.5	12.3	15.1	362.63	351.29	h9
2-457	354.97	6.99	9.5	12.3	15.1	375.59	364.25	h9
2-458	367.67	6.99	9.5	12.3	15.1	388.54	377.2	h9
2-459	380.37	6.99	9.5	12.3	15.1	401.49	390.15	h9
2-460	393.07	6.99	9.5	12.3	15.1	414.45	403.15	h9

Tab. 3.13

Parker no.	d_1	d_2	b_1 0.25 0	b_2 0.25 0	b_3 0.25 0	d_4/d_9 H8/f7	d_3 h9
2-014	12.42	1.78	2.8	4.2	5.6	16	13.2
2-114	15.54	2.62	3.8	5.2	6.6	20	15.8
2-117	20.3	2.62	3.8	5.2	6.6	25	20.8
2-121	26.64	2.62	3.8	5.2	6.6	32	27.8
2-126	34.59	2.62	3.8	5.2	6.6	40	35.8
2-342	91.44	5.33	7.2	9	10.9	100	90.8
2-345	100.97	5.33	7.2	9	10.9	110	100.8
2-349	113.67	5.33	7.2	9	10.9	125	115.8
2-354	129.54	5.33	7.2	9	10.9	140	130.7
2-360	148.59	5.33	7.2	9	10.9	160	150.8
2-439	164.47	6.99	9.5	12.3	15.1	180	168.2
2-442	183.52	6.99	9.5	12.3	15.1	200	188.2
2-445	202.57	6.99	9.5	12.3	15.1	220	208.2
2-447	227.97	6.99	9.5	12.3	15.1	250	238.2
2-450	266.07	6.99	9.5	12.3	15.1	280	268.2
2-453	304.17	6.99	9.5	12.3	15.1	320	308.2
2-456	342.27	6.99	9.5	12.3	15.1	360	348.2
2-459	380.38	6.99	9.5	12.3	15.1	400	388.2
2-463	430.66	6.99	9.5	12.3	15.1	450	438.2
2-467	481.46	6.99	9.5	12.3	15.1	500	488.2

Tab. 3.14 Basic dimensions of O-ring grooves for use in dynamic piston seals of selected metric sizes in pneumatic applications.

Tel: +45 63 12 83 00 | Email: ps@hymatik.com | www.hymatik.com | Hvidkaervej 27a, DK-5250 Odense SV, Denmark

3 Design recommendations

3.2.6 Pneumatic – rod seal dynamic

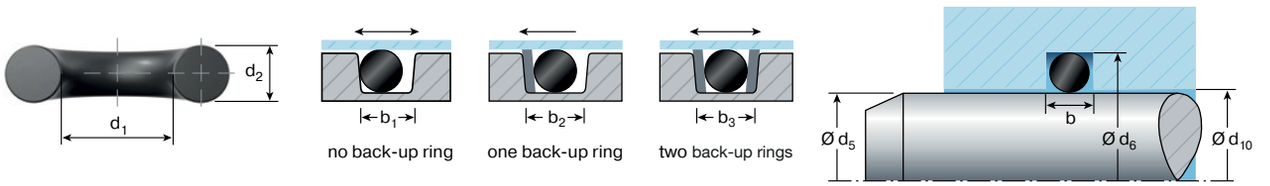

Fig. 3.17

Parker no.	d_1	d_2	b_1 0.25 0	b_2 0.25 0	b_3 0.25 0	d_5/d_{10} f7/H8	d_6 H9
2-006	2.9	1.78	2.8	4.2	5.6	3.16	5.9
2-007	3.68	1.78	2.8	4.2	5.6	3.87	6.7
2-008	4.47	1.78	2.8	4.2	5.6	4.7	7.46
2-009	5.28	1.78	2.8	4.2	5.6	5.5	8.29
2-010	6.07	1.78	2.8	4.2	5.6	6.3	9.09
2-011	7.65	1.78	2.8	4.2	5.6	8	10.78
2-012	9.25	1.78	2.8	4.2	5.6	9.5	12.31
2-104	2.84	2.62	3.8	5.2	6.6	3.03	7.16
2-105	3.63	2.62	3.8	5.2	6.6	3.85	8.02
2-106	4.42	2.62	3.8	5.2	6.6	4.65	8.85
2-107	5.23	2.62	3.8	5.2	6.6	5.5	9.72
2-108	6.02	2.62	3.8	5.2	6.6	6.3	10.53
2-109	7.59	2.62	3.8	5.2	6.6	8	12.22
2-110	9.19	2.62	3.8	5.2	6.6	9.5	13.97
2-111	10.77	2.62	3.8	5.2	6.6	11.2	15.6
2-112	12.37	2.62	3.8	5.2	6.6	12.8	17
2-113	13.94	2.62	3.8	5.2	6.6	14.5	18.7
2-114	15.54	2.62	3.8	5.2	6.6	16	20.25
2-115	17.12	2.62	3.8	5.2	6.6	17.7	21.9
2-116	18.72	2.62	3.8	5.2	6.6	19.3	23.5
2-210	18.64	3.53	5	6.4	7.8	19.3	25
2-211	20.22	3.53	5	6.4	7.8	21	26.7
2-212	21.82	3.53	5	6.4	7.8	22.5	28.48
2-213	23.39	3.53	5	6.4	7.8	24.1	29.9
2-214	24.99	3.53	5	6.4	7.8	25.7	31.5
2-215	26.57	3.53	5	6.4	7.8	27.2	32.9
2-216	28.17	3.53	5	6.4	7.8	28.8	34.6
2-217	29.74	3.53	5	6.4	7.8	30.4	36.2
2-218	31.34	3.53	5	6.4	7.8	32	37.8
2-219	32.92	3.53	5	6.4	7.8	33.6	39.4
2-220	34.52	3.53	5	6.4	7.8	35.3	41
2-221	36.09	3.53	5	6.4	7.8	36.8	42.5
2-325	37.47	5.33	7.2	9	10.9	38.5	47.4
2-326	40.64	5.33	7.2	9	10.9	41.5	50.4
2-327	43.82	5.33	7.2	9	10.9	45	53.75
2-328	46.99	5.33	7.2	9	10.9	48	56.9
2-329	50.17	5.33	7.2	9	10.9	51.2	60
2-330	53.34	5.33	7.2	9	10.9	54.4	63.2
2-331	56.52	5.33	7.2	9	10.9	57.55	66.38

Tab. 3.15

Parker no.	d_1	d_2	b_1 0.25 0	b_2 0.25 0	b_3 0.25 0	d_5/d_{10} f7/H8	d_6 H9
2-010	6.07	1.78	2.8	4.2	5.6	6	8.8
2-013	10.92	1.78	2.8	4.2	5.6	10	12.8
2-014	12.42	1.78	2.8	4.2	5.6	12	14.8
2-015	14	1.78	2.8	4.2	5.6	14	16.8
2-018	18.77	1.78	2.8	4.2	5.6	18	20.8
2-117	20.3	2.62	3.8	5.2	6.6	20	24.2
2-118	21.89	2.62	3.8	5.2	6.6	22	26.2
2-120	25.07	2.62	3.8	5.2	6.6	25	29.2
2-122	28.24	2.62	3.8	5.2	6.6	28	32.2
2-125	32.99	2.62	3.8	5.2	6.6	32	36.2
2-329	50.17	5.33	7.2	9	10.9	50	59.1
2-331	56.52	5.33	7.2	9	10.9	56	65.2
2-333	62.87	5.33	7.2	9	10.9	63	72.1
2-335	69.22	5.33	7.2	9	10.9	70	79.1
2-339	81.92	5.33	7.2	9	10.9	80	89.1
2-342	91.44	5.33	7.2	9	10.9	90	991
2-345	100.97	5.33	7.2	9	10.9	100	109.1
2-348	110.49	5.33	7.2	9	10.9	110	119.1
2-429	126.37	6.99	9.5	12.3	15.1	125	136.8
2-433	139.07	6.99	9.5	12.3	15.1	140	151.8
2-438	158.12	6.99	9.5	12.3	15.1	160	171.8
2-442	183.52	6.99	9.5	12.3	15.1	180	191.8
2-445	202.57	6.99	9.5	12.3	15.1	200	211.8
2-447	227.97	6.99	9.5	12.3	15.1	220	231.8
2-449	253.37	6.99	9.5	12.3	15.1	250	261.8
2-451	278.77	6.99	9.5	12.3	15.1	280	291.8
2-455	329.57	6.99	9.5	12.3	15.1	320	331.8
2-458	367.67	6.99	9.5	12.3	15.1	360	371.8

Tab. 3.16 Basic dimensions of O-ring grooves for use in dynamic rod seals of selected metric sizes in pneumatic applications.

Tel: +45 63 12 83 00 | Email: ps@hymatik.com | www.hymatik.com | Hvidkaervej 27a, DK-5250 Odense SV, Denmark

3.2.7 Pneumatic – floating assembly dynamic

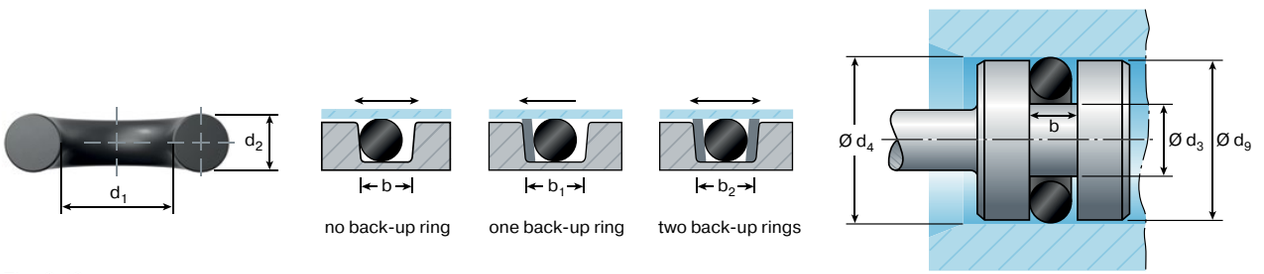

Fig. 3.18

Parker no.	d_1	d_2	b_1 +0.2 0	b +0.2 0	d_3 h8	d_4 H8	d_9 f7
2-006	2.9	1.78	2.4	2	2	6	6
2-007	3.68	1.78	2.4	2	3	7	7
6-166	3.9	1.8	2.4	2	3.2	7.2	7.2
2-008	4.47	1.78	2.4	2	3.5	7.5	7.5
5-581	4.9	1.9	2.4	2	4	8	8
2-009	5.28	1.78	2.4	2	4.5	8.5	8.5
2-010	6.07	1.78	2.4	2	5.5	9.5	9.5
5-052	6.86	1.78	2.4	2	6	10	10
2-011	7.65	1.78	2.4	2	7	11	11
5-585	8	1.88	2.4	2	7.5	11.5	11.5
5-612	8.74	1.78	2.4	2	8	12	12
2-012	9.25	1.78	2.4	2	8.5	12.5	12.5
5-212	9.75	1.78	2.4	2	9	13	13
2-013	10.82	1.78	2.4	2	10	14	14
6-366	11.89	1.78	2.4	2	11	15	15
2-014	12.42	1.78	2.4	2	11.5	15.5	15.5
2-015	14	1.78	2.4	2	13	17	17
6-085	15	1.8	2.4	2	14	18	18
2-016	15.6	1.78	2.4	2	15	19	19
2-017	17.17	1.78	2.4	2	16	20	20
2-110	9.19	2.62	3.6	3	8.2	14	14
5-614	9.93	2.62	3.6	3	8.7	14.5	14.5
2-111	10.77	2.62	3.6	3	9.7	15.5	15.5
5-615	11.91	2.62	3.6	3	10.7	16.5	16.5
2-112	12.37	2.62	3.6	3	11.2	17	17
5-616	13.11	2.62	3.6	3	12.2	18	18
2-113	13.94	2.62	3.6	3	12.7	18.5	18.5
5-239	14.48	2.69	3.6	3	13.7	19.5	19.5
2-114	15.54	2.62	3.6	3	14.2	20	20
5-617	15.88	2.62	3.6	3	14.7	20.5	20.5
2-115	17.12	2.62	3.6	3	16.2	22	22
5-256	17.96	2.62	3.6	3	16.7	22.5	22.5
2-116	18.76	2.62	3.6	3	17.7	23.5	23.5
2-117	20.29	2.62	3.6	3	19.2	25	25
2-118	21.89	2.62	3.6	3	20.7	26.5	26.5
2-119	23.47	2.62	3.6	3	22.2	28	28

Parker no.	d_1	d_2	b_1 +0.2 0	b +0.2 0	d_3 h8	d_4 H8	d_9 f7
2-120	25.07	2.62	3.6	3	24.2	30	30
2-121	26.64	2.62	3.6	3	25.7	31.5	31.5
2-122	28.24	2.62	3.6	3	27.2	33	33
2-123	29.82	2.62	3.6	3	28.7	34.5	34.5
2-124	31.42	2.62	3.6	3	30.2	36	36
2-125	32.99	2.62	3.6	3	31.7	37.5	37.5
2-126	34.55	2.62	3.6	3	33.2	39	39
2-127	36.17	2.62	3.6	3	34.2	40	40
2-128	37.77	2.62	3.6	3	36.2	42	42
2-210	18.64	3.53	4.8	4	17.4	25	25
5-595	19.8	3.6	4.8	4	18.4	26	26
2-211	20.22	3.53	4.8	4	18.9	26.5	26.5
2-212	21.82	3.53	4.8	4	20.4	28	28
2-213	23.39	3.53	4.8	4	22.4	30	30
2-214	24.99	3.53	4.8	4	23.9	31.5	31.5
5-618	25.81	3.53	4.8	4	24.4	32	32
2-215	26.57	3.53	4.8	4	25.4	33	33
2-216	28.17	3.53	4.8	4	26.9	34.5	34.5
2-217	29.74	3.53	4.8	4	28.4	36	36
2-218	31.34	3.53	4.8	4	29.9	37.5	37.5
2-219	32.92	3.53	4.8	4	31.9	39.5	39.5
2-220	34.52	3.53	4.8	4	33.4	41	41
2-221	36.09	3.53	4.8	4	34.9	42.5	42.5
2-222	37.69	3.53	4.8	4	36.4	44	44
5-321	39.6	3.53	4.8	4	38.4	46	46
2-223	40.87	3.53	4.8	4	39.4	47	47
2-224	44.04	3.53	4.8	4	42.4	50	50
5-035	45.36	3.53	4.8	4	43.9	51.5	51.5
2-225	47.22	3.53	4.8	4	45.9	53.5	53.5
5-701	49.2	3.53	4.8	4	47.4	55	55
2-226	50.39	3.53	4.8	4	48.9	56.5	56.5
2-227	53.57	3.53	4.8	4	52.4	60	60
2-228	56.74	3.53	4.8	4	55.4	63	63
2-229	59.92	3.53	4.8	4	58.4	66	66
2-230	63.09	3.53	4.8	4	61.4	69	69
2-231	66.27	3.53	4.8	4	64.4	72	72

Tel: +45 63 12 83 00 | Email: ps@hymatik.com | www.hymatik.com | Hvidkaervej 27a, DK-5250 Odense SV, Denmark

3 Design recommendations

Parker no.	d_1	d_2	b_1 +0.2 0	b +0.2 0	d_3 h8	d_4 H8	d_9 f7
2-232	69.44	3.53	4.8	4	68.4	76	76
2-233	72.62	3.53	4.8	4	71.4	79	79
2-234	75.79	3.53	4.8	4	74.4	82	82
2-235	78.97	3.53	4.8	4	77.4	85	85
2-236	82.14	3.53	4.8	4	80.4	88	88
2-237	85.32	3.53	4.8	4	83.4	91	91
2-238	88.49	3.53	4.8	4	86.4	94	94
2-239	91.67	3.53	4.8	4	89.4	97	97
2-240	94.84	3.53	4.8	4	92.4	100	100
2-241	98.02	3.53	4.8	4	96.4	104	104
2-242	101.19	3.53	4.8	4	99.4	107	107
2-243	104.37	3.53	4.8	4	102.4	110	110
2-244	107.54	3.53	4.8	4	105.4	113	113
2-245	110.72	3.53	4.8	4	108.4	116	116
2-246	113.89	3.53	4.8	4	112.4	120	120
2-247	117.07	3.53	4.8	4	115.4	123	123
2-248	120.24	3.53	4.8	4	118.4	126	126
2-249	123.42	3.53	4.8	4	121.4	129	129
2-250	126.59	3.53	4.8	4	124.4	132	132
2-251	129.77	3.53	4.8	4	128.4	136	136
2-252	132.94	3.53	4.8	4	131.4	139	139
2-253	136.12	3.53	4.8	4	134.4	142	142
2-254	139.29	3.53	4.8	4	137.4	145	145
2-255	142.47	3.53	4.8	4	140.4	148	148
2-256	145.64	3.53	4.8	4	142.4	150	150
2-257	148.82	3.53	4.8	4	146.4	154	154
2-258	151.99	3.53	4.8	4	149.4	157	157
2-259	158.34	3.53	4.8	4	156.4	164	164
2-260	164.69	3.53	4.8	4	162.4	170	170
2-261	171.04	3.53	4.8	4	168.4	176	176
2-262	177.39	3.53	4.8	4	174.4	182	182
2-263	183.84	3.53	4.8	4	184.4	189	189
2-264	190.09	3.53	4.8	4	190.4	195	195
2-325	37.47	5.33	7.2	6	35.8	47	47
2-326	40.64	5.33	7.2	6	38.8	50	50
5-330	42.52	5.33	7.2	6	40.8	52	52
2-327	43.82	5.33	7.2	6	41.8	53	53
2-328	46.99	5.33	7.2	6	44.8	56	56
2-329	50.17	5.33	7.2	6	47.8	59	59
2-330	53.34	5.33	7.2	6	51.8	63	63
2-331	56.52	5.33	7.2	6	54.8	66	66
2-332	59.69	5.33	7.2	6	57.8	69	69
2-333	62.87	5.33	7.2	6	60.8	72	72
2-334	66.04	5.33	7.2	6	63.8	75	75
2-335	69.22	5.33	7.2	6	66.8	78	78
2-336	72.39	5.33	7.2	6	70.8	82	82
2-337	75.57	5.33	7.2	6	73.8	85	85
2-338	78.74	5.33	7.2	6	76.8	88	88
2-339	81.92	5.33	7.2	6	79.8	91	91
2-340	85.09	5.33	7.2	6	82.8	94	94
2-341	88.27	5.33	7.2	6	85.8	97	97
2-342	91.44	5.33	7.2	6	88.8	100	100
2-343	94.62	5.33	7.2	6	92.8	104	104
2-344	97.79	5.33	7.2	6	96.8	108	108
2-345	100.97	5.33	7.2	6	98.8	110	110
2-346	104.14	5.33	7.2	6	101.8	113	113
2-347	107.32	5.33	7.2	6	104.8	116	116
2-348	110.49	5.33	7.2	6	108.8	120	120
2-349	113.67	5.33	7.2	6	110.8	122	122
2-350	116.84	5.33	7.2	6	114.8	126	126
2-351	120.02	5.33	7.2	6	117.8	129	129
2-352	123.19	5.33	7.2	6	120.8	132	132
2-353	126.37	5.33	7.2	6	123.8	135	135
2-354	129.54	5.33	7.2	6	126.8	138	138
2-355	132.72	5.33	7.2	6	130.8	142	142
2-356	135.89	5.33	7.2	6	133.8	145	145
2-357	139.07	5.33	7.2	6	136.8	148	148
2-358	142.24	5.33	7.2	6	139.8	151	151
2-359	145.42	5.33	7.2	6	142.8	154	154
2-360	148.59	5.33	7.2	6	145.8	157	157
2-361	151.77	5.33	7.2	6	149.8	161	161
2-362	158.12	5.33	7.2	6	155.8	167	167
2-363	164.47	5.33	7.2	6	161.8	173	173
2-364	170.82	5.33	7.2	6	168.8	180	180
2-365	177.17	5.33	7.2	6	176.8	186	186
2-366	183.52	5.33	7.2	6	180.8	192	192
2-367	189.87	5.33	7.2	6	186.8	198	198
2-368	196.22	5.33	7.2	6	193.8	205	205
2-369	202.57	5.33	7.2	6	198.8	210	210
2-370	208.92	5.33	7.2	6	205.8	217	217
2-371	215.27	5.33	7.2	6	212.8	224	224
2-372	221.62	5.33	7.2	6	218.8	230	230
2-373	227.97	5.33	7.2	6	224.8	236	236
2-374	234.32	5.33	7.2	6	231.8	243	243
2-375	240.67	5.33	7.2	6	236.8	248	248
2-444	196.22	6.99	9.6	8	193.4	208	208
2-445	202.57	6.99	9.6	8	200.4	215	215
2-446	215.27	6.99	9.6	8	210.4	225	225
2-447	227.97	6.99	9.6	8	225.4	240	240
2-448	240.67	6.99	9.6	8	235.4	250	250

Tab. 3.17

Tel: +45 63 12 83 00 | Email: ps@hymatik.com | www.hymatik.com | Hvidkaervej 27a, DK-5250 Odense SV, Denmark

4 O-rings and Parbak® back-up rings

4.1 O-ring dimension

As a manufacturer of O-Rings, Parker can produce any O-Ring size required. However, it is more economic to select from standard sizes available ex-stock, particularly our 2-xxx series listed below.
Our 2-xxx series complies with the internationally recognised American Standard AS 568 B. These cross-section sizes also have been adopted by DIN ISO 3601-1.

Characteristics of the 2-xxx series
The 2-xxx series from Parker offers the following advantages.

1. The following compounds are available ex-stock:
   N0674-70 (NBR, 70 Shore A)
   N0552-90 (NBR, 90 Shore A)
   E0540-80 (EPDM, 80 Shore A)
   V0747-75 (FKM, 75 Shore A)
2. For each 2-xxx series O-Ring an appropriate Parker Parbak® back-up ring is available. This is particularly important in the case of high pressures (see section Parbak® back-up ring).
3. O-Rings of the 2-xxx series correspond to the standard ISO 3601.

2-0xx sizes: cross-section d_2 = 1.78 mm

Parker no.	Inner diameter	Cross-section d_2
2-001*	0.74	1.02
2-002*	1.07	1.27
2-003*	1.42	1.52
2-004	1.78	1.78
2-005	2.57	1.78
2-006	2.9	1.78
2-007	3.68	1.78
2-008	4.47	1.78
2-009	5.28	1.78
2-010	6.07	1.78
2-011	7.65	1.78
2-012	9.25	1.78
2-013	10.82	1.78
2-014	12.42	1.78
2-015	14	1.78
2-016	15.6	1.78
2-017	17.17	1.78
2-018	18.17	1.78
2-019	20.35	1.78
2-020	21.95	1.78
2-021	23.52	1.78
2-022	25.12	1.78
2-023	26.7	1.78
2-024	28.3	1.78
2-025	29.87	1.78
2-026	31.47	1.78
2-027	33.05	1.78
2-028	34.65	1.78
2-029	37.82	1.78
2-030	41	1.78
2-031	44.17	1.78
2-032	47.35	1.78
2-033	50.52	1.78
2-034	53.7	1.78
2-035	56.87	1.78
2-036	60.05	1.78
2-037	63.22	1.78
2-038	66.4	1.78
2-039	69.57	1.78
2-040	72.75	1.78
2-041	75.92	1.78
2-042	82.27	1.78
2-043	88.62	1.78
2-044	94.97	1.78
2-045	101.32	1.78
2-046	107.67	1.78
2-047	114.02	1.78
2-048	120.37	1.78
2-049	126.72	1.78
2-050	133.07	1.78

** Please note the differing cross-sections for these sizes.*

Tab. 4.1 2-0xx sizes

2-1xx sizes: cross-section d_2 = 2.62 mm

Parker no.	Ø d mm	Cross-section d_2
2-102	1.24	2.62
2-103	2.06	2.62
2-104	2.84	2.62
2-105	3.63	2.62
2-106	4.42	2.62
2-107	5.23	2.62
2-108	6.02	2.62
2-109	7.59	2.62
2-110	9.19	2.62
2-111	10.77	2.62
2-112	12.37	2.62
2-113	13.94	2.62
2-114	15.54	2.62
2-115	17.12	2.62
2-116	18.72	2.62
2-117	20.29	2.62
2-118	21.89	2.62
2-119	23.47	2.62

Tel: +45 63 12 83 00 | Email: ps@hymatik.com | www.hymatik.com | Hvidkaervej 27a, DK-5250 Odense SV, Denmark

4 O-rings and Parbak® back-up rings

Parker no.	Ø d mm	Cross-section d_2
2-120	25.07	2.62
2-121	26.64	2.62
2-122	28.24	2.62
2-123	29.82	2.62
2-124	31.42	2.62
2-125	32.99	2.62
2-126	34.59	2.62
2-127	36.17	2.62
2-128	37.77	2.62
2-129	39.34	2.62
2-130	40.94	2.62
2-131	42.52	2.62
2-132	44.12	2.62
2-133	45.69	2.62
2-134	47.29	2.62
2-135	48.9	2.62
2-136	50.47	2.62
2-137	52.07	2.62
2-138	53.64	2.62
2-139	55.25	2.62
2-140	56.82	2.62
2-141	58.42	2.62
2-142	59.99	2.62
2-143	61.6	2.62
2-144	63.17	2.62
2-145	64.77	2.62
2-146	66.34	2.62
2-147	67.95	2.62
2-148	69.52	2.62
2-149	71.12	2.62
2-150	72.69	2.62
2-151	75.87	2.62
2-152	82.22	2.62
2-153	88.57	2.62
2-154	94.92	2.62
2-155	101.27	2.62
2-156	107.62	2.62
2-157	113.97	2.62
2-158	120.32	2.62
2-159	126.67	2.62
2-160	133.02	2.62
2-161	139.37	2.62
2-162	145.72	2.62
2-163	152.07	2.62
2-164	158.42	2.62
2-165	164.77	2.62
2-166	171.12	2.62
2-167	177.47	2.62
2-168	183.82	2.62
2-169	190.17	2.62
2-170	196.52	2.62
2-171	202.87	2.62
2-172	209.22	2.62
2-173	215.57	2.62
2-174	221.92	2.62
2-175	228.27	2.62
2-176	234.62	2.62
2-177	240.97	2.62
2-178	247.32	2.62

Tab. 4.2 2-1xx sizes

2-2xx sizes: cross-section d_2 = 3.53 mm

Parker no.	Ø d mm	Cross-section d_2
2-201	4.34	3.53
2-202	5.94	3.53
2-203	7.52	3.53
2-204	9.12	3.53
2-205	10.12	3.53
2-206	12.29	3.53
2-207	13.87	3.53
2-208	15.47	3.53
2-209	17.04	3.53
2-210	18.64	3.53
2-211	20.22	3.53
2-212	21.82	3.53
2-213	23.39	3.53
2-214	24.99	3.53
2-215	26.57	3.53
2-216	28.17	3.53
2-217	29.74	3.53
2-218	31.34	3.53
2-219	32.92	3.53
2-220	34.52	3.53
2-221	36.09	3.53
2-222	37.69	3.53
2-223	40.87	3.53
2-224	44.04	3.53
2-225	47.22	3.53
2-226	50.39	3.53
2-227	53.57	3.53
2-228	56.74	3.53
2-229	59.92	3.53
2-230	63.09	3.53
2-231	66.27	3.53
2-232	69.44	3.53
2-233	72.62	3.53
2-234	75.79	3.53

Tel: +45 63 12 83 00 | Email: ps@hymatik.com | www.hymatik.com | Hvidkaervej 27a, DK-5250 Odense SV, Denmark

4 O-rings and Parbak® back-up rings

Parker no.	Ø d mm	Cross-section d_2
2-235	78.97	3.53
2-236	82.14	3.53
2-237	85.32	3.53
2-238	88.49	3.53
2-239	91.67	3.53
2-240	94.84	3.53
2-241	98.02	3.53
2-242	101.19	3.53
2-243	104.37	3.53
2-244	107.54	3.53
2-245	110.72	3.53
2-246	113.89	3.53
2-247	117.07	3.53
2-248	120.24	3.53
2-249	123.42	3.53
2-250	126.59	3.53
2-251	129.77	3.53
2-252	132.94	3.53
2-253	136.12	3.53
2-254	139.29	3.53
2-255	142.47	3.53
2-256	145.64	3.53
2-257	148.82	3.53
2-258	151.99	3.53
2-259	158.34	3.53
2-260	164.69	3.53
2-261	171.04	3.53
2-262	177.39	3.53
2-263	183.74	3.53
2-264	190.09	3.53
2-265	196.44	3.53
2-266	202.79	3.53
2-267	209.14	3.53
2-268	215.49	3.53
2-269	221.84	3.53
2-270	228.19	3.53
2-271	234.54	3.53
2-272	240.89	3.53
2-273	247.24	3.53
2-274	253.59	3.53
2-275	266.29	3.53
2-276	278.99	3.53
2-277	291.69	3.53
2-278	304.39	3.53
2-279	329.79	3.53
2-280	355.19	3.53
2-281	380.59	3.53
2-282	405.26	3.53
2-283	430.66	3.53
2-284	456.06	3.53

Tab. 4.3 2-2xx sizes

2-3xx sizes: cross-section d_2 = 5.33 mm

Parker no.	Ø d mm	Cross-section d_2
2-309	10.46	5.33
2-310	12.07	5.33
2-311	13.64	5.33
2-312	15.24	5.33
2-313	16.81	5.33
2-314	18.42	5.33
2-315	19.99	5.33
2-316	21.59	5.33
2-317	23.16	5.33
2-318	24.77	5.33
2-319	26.34	5.33
2-320	27.94	5.33
2-321	29.51	5.33
2-322	31.12	5.33
2-323	32.69	5.33
2-324	34.29	5.33
2-325	37.47	5.33
2-326	40.64	5.33
2-327	43.82	5.33
2-328	46.99	5.33
2-329	50.17	5.33
2-330	53.34	5.33
2-331	56.52	5.33
2-332	59.69	5.33
2-333	62.87	5.33
2-334	66.04	5.33
2-335	69.22	5.33
2-336	72.39	5.33
2-337	75.57	5.33
2-338	78.74	5.33
2-339	81.92	5.33
2-340	85.09	5.33
2-341	88.27	5.33
2-342	91.44	5.33
2-343	94.62	5.33
2-344	97.79	5.33
2-345	100.97	5.33
2-346	104.14	5.33
2-347	107.32	5.33
2-348	110.49	5.33
2-349	113.67	5.33
2-350	116.84	5.33
2-351	120.02	5.33
2-352	123.19	5.33
2-353	126.37	5.33
2-354	129.54	5.33
2-355	132.72	5.33
2-356	135.89	5.33

Tel: +45 63 12 83 00 | Email: ps@hymatik.com | www.hymatik.com | Hvidkaervej 27a, DK-5250 Odense SV, Denmark

4 O-rings and Parbak® back-up rings

Parker no.	Ø d mm	Cross-section d_2
2-357	139.07	5.33
2-358	142.24	5.33
2-359	145.42	5.33
2-360	148.59	5.33
2-361	151.77	5.33
2-362	158.12	5.33
2-363	164.47	5.33
2-364	170.82	5.33
2-365	177.17	5.33
2-366	183.52	5.33
2-367	189.87	5.33
2-368	196.22	5.33
2-369	202.57	5.33
2-370	208.92	5.33
2-371	215.27	5.33
2-372	221.62	5.33
2-373	227.97	5.33
2-374	234.32	5.33
2-375	240.67	5.33
2-376	247.02	5.33
2-377	253.37	5.33
2-378	266.07	5.33
2-379	278.77	5.33
2-380	291.47	5.33
2-381	304.17	5.33
2-382	329.57	5.33
2-383	354.97	5.33
2-384	380.37	5.33
2-385	405.26	5.33
2-386	430.66	5.33
2-387	456.06	5.33
2-388	481.41	5.33
2-389	506.81	5.33
2-390	532.26	5.33
2-391	557.61	5.33
2-392	582.68	5.33
2-393	608.08	5.33
2-394	633.48	5.33
2-395	658.88	5.33

Tab. 4.4 2-3xx sizes

2-4xx sizes: cross-section d_2 = 6.99 mm

Parker no.	Ø d mm	Cross-section d_2
2-425	113.67	6.99
2-426	116.84	6.99
2-427	120.02	6.99
2-428	123.19	6.99
2-429	126.37	6.99
2-430	129.54	6.99
2-431	132.72	6.99
2-432	135.89	6.99
2-433	139.07	6.99
2-434	142.24	6.99
2-435	145.42	6.99
2-436	148.59	6.99
2-437	151.77	6.99
2-438	158.12	6.99
2-439	164.47	6.99
2-440	170.82	6.99
2-441	177.17	6.99
2-442	183.52	6.99
2-443	189.87	6.99
2-444	196.22	6.99
2-445	202.57	6.99
2-446	215.27	6.99
2-447	227.97	6.99
2-448	240.67	6.99
2-449	253.37	6.99
2-450	266.07	6.99
2-451	278.77	6.99
2-452	291.47	6.99
2-453	304.17	6.99
2-454	316.87	6.99
2-455	329.57	6.99
2-456	342.27	6.99
2-457	354.97	6.99
2-458	367.67	6.99
2-459	380.37	6.99
2-460	393.07	6.99
2-461	405.26	6.99
2-462	417.96	6.99
2-463	430.66	6.99
2-464	443.36	6.99
2-465	456.06	6.99
2-466	468.76	6.99
2-467	481.46	6.99
2-468	494.16	6.99
2-469	506.86	6.99
2-470	532.26	6.99
2-471	557.66	6.99
2-472	582.68	6.99
2-473	608.08	6.99
2-474	633.48	6.99
2-475	658.88	6.99

Tab. 4.5 2-4xx sizes

Tel: +45 63 12 83 00 | Email: ps@hymatik.com | www.hymatik.com | Hvidkaervej 27a, DK-5250 Odense SV, Denmark

4 O-rings and Parbak® back-up rings

The size of an O-ring affects the two most important design parameters of an O-ring seal: elongation or compression and deformation, i.e. the deformation of the diameter of the cross-section when installed. Relevant recommendations for installation are provided (see section “Design recommendations”) which, ultimately, depend on the type O-ring application. Minor deviations from the upper or lower limits of the installation recommendations are possible in many cases without impairing the function or service life of the seal. If in doubt, please consult our application engineers.

Tolerances
Parker precision O-rings are manufactured to very narrow tolerances. These tolerances are standardized in DIN ISO 3601-1 and provided in the tables below. These tolerances are specific to nitrile butadiene rubber O-rings, hardness 70 IRHD. For other compounds, individual material shrinkage factors could lead to different acceptance widths and tolerance positions. If these variations affect the functional characteristics of the product, it is necessary to manufacture a corresponding mould to remain within the specified tolerance band.

Ordering example
Inner diameter: 14.00 mm
Cross-section: 1.78 mm
Parker-No.: 2-015
Compound: N0674-70 (NBR 70, Shore A)
O-Ring, 14 × 1.78, 2-015, N0674-70

Cross-section d_2 [mm]	Tolerance [mm]
0.80 $< d_2 \leq$ 2.25 [1)]	± 0.08
2.25 $< d_2 \leq$ 3.15 [1)]	± 0.09
3.15 $< d_2 \leq$ 4.50	± 0.10
4.50 $< d_2 \leq$ 6.30	± 0.13
6.30 $< d_2 \leq$ 8.40	± 0.15

[1)] *Only valid for class B*

Tab. 4.6 Tolerances of cross-sections for O-Rings

Calculation of the inside diameter tolerance
$\Delta d_1 = \pm [(d_1^{0.95} \times 0.009) + 0.11]$

The equation can be used for the calculation of the inside diameter tolerance (class B) for O-Rings.

Example: Tolerance Δd_1 for the inside diameter of an O-Ring, d_1 = 400 mm

$\Delta d_1 = \pm [(400^{0.95} \times 0.009) + 0.11]$
$\Delta d_1 = \pm [(296.45 \times 0.009) + 0.11]$
$\Delta d_1 = \pm 2.78$ mm

Tel: +45 63 12 83 00 | Email: ps@hymatik.com | www.hymatik.com | Hvidkaervej 27a, DK-5250 Odense SV, Denmark

4 O-rings and Parbak® back-up rings

4.2 O-Rings for threaded connectors

Threaded connectors are used for fast and reliable joining of flexible conduits/hoses/tubes and plumbing/piping. Unlike flange connectors threaded connectors involve no welding work, which makes it easier to produce them with small nominal diameters. Their applications range up to a nominal diameter of DN 30 (1¼ inches) and pressure ratings of up to several 100 bar.

Connecting elements are divided into metallic and soft sealing types. Soft sealing threaded connectors are used in virtually all industrial sectors. In addition to construction machinery, machine tools, hydraulic presses and plastic injection moulding machines, they include shipbuilding, rail technology and offshore applications, for example.

Seals for soft sealing threaded connectors are primarily made from NBR, EPDM and FKM compounds. The Parker Engineered Materials Group offers ED-Rings, O-Rings and moulded parts in a wide variety of compounds for threaded connectors. In combination with high-grade connecting elements they ensure optimum performance even in harsh application conditions.

Among other things, soft seals offer the following advantages:
- Low leakage even in low-viscosity media
- Compensation for manufacturing tolerances
- Ease of use
- Suitability for re-installation

4.2.1 DIN EN ISO 6149-1 threaded connectors for metric tube fittings and ISO 11926-1 connectors for UNF with conical counterbore

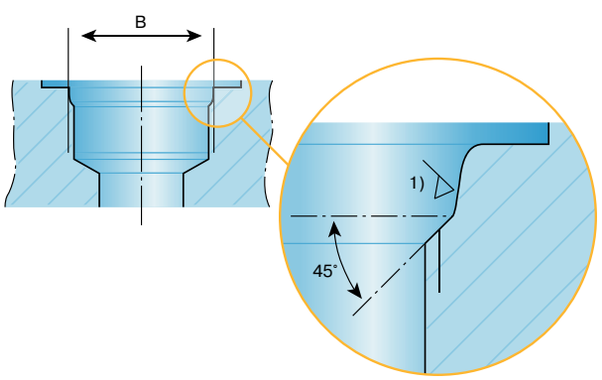

1) The seal surface is produced so that axial or spiral cutting marks are avoided.

$R_{max.}$ = 6.3 µm, R_a = 1.6 µm

Dimensions for the conical counterbore are taken from the standard.

Fig. 4.1 Threaded connector with conical counterbore

Where a pulsating pressure exists, O-Rings for thread M 22 × 1.5 and larger should be produced in extrusion resistant polyurethane P5008. Under such conditions, O-Rings in NBR are not suitable.

Metric screw thread Dimension B	O-ring dimension d_1 [mm]	O-ring dimension d_2 [mm]	Parker order code
M 8 × 1.0	6.1 ±0.2	1.6 ±0.08	6-1751
M 10 × 1.0	8.1 ±0.2	1.6 ±0.08	6-192
M 12 × 1.5	9.3 ±0.2	2.2 ±0.08	6-1730
M 14 × 1.5	11.3 ±0.2	2.2 ±0.08	6-1536
M 16 × 1.5	13.3 ±0.2	2.2 ±0.08	6-1936
M 18 × 1.5	15.3 ±0.2	2.2 ±0.08	6-940
M 20 × 1.5	17.3 ±0.22	2.2 ±0.08	6-1961
M 22 × 1.5	19.3 ±0.22	2.2 ±0.08	6-1975
M 27 × 2.0	23.6 ±0.24	2.9 ±0.09	6-942
M 30 × 2.0	26.6 ±0.26	2.9 ±0.09	on request
M 33 × 2.0	29.6 ±0.29	2.9 ±0.09	on request
M 42 × 2.0	38.6 ±0.37	2.9 ±0.09	on request
M 48 × 2.0	46.6 ±0.43	2.9 ±0.09	on request
M 60 × 2.0	56.6 ±0.51	2.9 ±0.09	on request

Tab. 4.7 O-Ring dimensions for DIN EN ISO 6149

Compound: NBR (Acrylonitrile-butadiene rubber), extrusion resistant, N0552-90.
Ordering example: DIN EN ISO 6149 O-Ring for metric fine threaded connector with conical counterbore M 10 × 1: O-Ring 6-1975, N0552-90.

4.2.2 Threaded fitting with 24° seal face for DIN 3861 bore type W

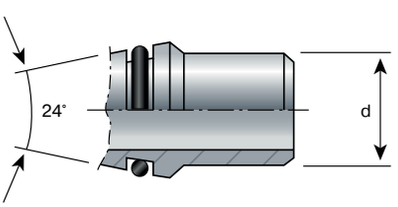

Fig. 4.2 Threaded fitting with 24° conical seal face: form A for welded connector

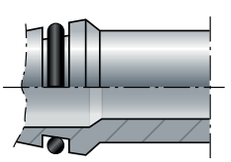

Fig. 4.3 Threaded fitting with 24° conical seal face: form B for hose connector

Tel: +45 63 12 83 00 | Email: ps@hymatik.com | www.hymatik.com | Hvidkaervej 27a, DK-5250 Odense SV, Denmark

4 O-rings and Parbak® back-up rings

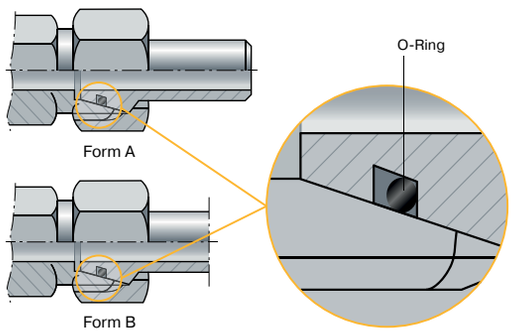

Fig. 4.4 Assembly

Type	Tube outer diameter	O-ring dimension		Parker order code
	d	d_1	d_2	
	[mm]	[mm]	[mm]	
light	8	6.00	1.50	6-038
light	10	7.50	1.50	6-091
light	12	9.00	1.50	6-010
light	15	12.00	2.00	6-065
light	18	15.00	2.00	6-005
light	22	20.00	2.00	9-205
light	28	26.00	2.00	9-262
light	35	32.00	2.50	9-300
light	42	38.00	2.50	9-341
heavy	8	6.00	1.50	6-038
heavy	10	7.50	1.50	6-091
heavy	12	9.00	1.50	6-010
heavy	14	10.00	2.00	6-003
heavy	16	12.00	2.00	6-065
heavy	20	16.30	2.40	9-168
heavy	25	20.30	2.40	6-275
heavy	30	25.30	2.40	9-259
heavy	38	33.30	2.40	6-472

Tab. 4.8 O-Ring dimensions

Compound: NBR (Acrylonitrile-butadiene rubber), extrusion resistant N0552-90.
Ordering example: O-Ring for bore type W according to DIN 3861, light type, pipe outside diameter 22 mm: O-Ring, 9-205, N0552-90.

4.2.3 SAE J 514 threaded connectors, SAE J 475 (ISO 725) screw threads

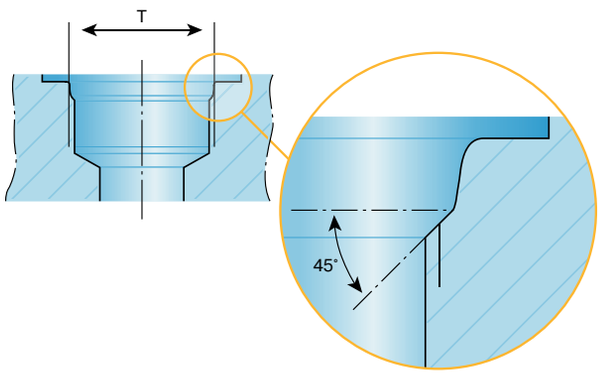

Fig. 4.5

Imperial thread dimension T	Tube outer diameter	O-ring dimension		Parker order code
		d_1	d_2	
[inch]	[inch]	[mm]	[mm]	
5/16 - 24	1/8	6.07	1.63	3-902
3/8 - 24	3/16	7.65	1.63	3-903
7/16 - 20	1/4	8.92	1.83	3-904
1/2 - 20	5/16	10.52	1.83	3-905
9/16 - 18	3/8	11.89	1.98	3-906
3/4 - 16	1/2	16.36	2.21	3-908
7/8 - 14	5/8	19.18	2.46	3-910
1 1/16 - 12	3/4	23.47	2.95	3-912
1 3/16 - 12	7/8	26.59	2.95	3-914
1 5/16 - 12	1	29.74	2.95	3-916
1 5/16 - 12	1 1/4	37.47	3.00	3-920
1 7/8 - 12	1 1/2	43.69	3.00	3-924
2 1/2 - 12	2	59.36	3.00	3-932

Tab. 4.9 O-Ring dimensions according to SAE J 514 SAE J 475

Tel: +45 63 12 83 00 | Email: ps@hymatik.com | www.hymatik.com | Hvidkaervej 27a, DK-5250 Odense SV, Denmark

4 O-rings and Parbak® back-up rings

4.2.4 MS 33649 threaded connectors, MIL-S-8879 straight threaded bore

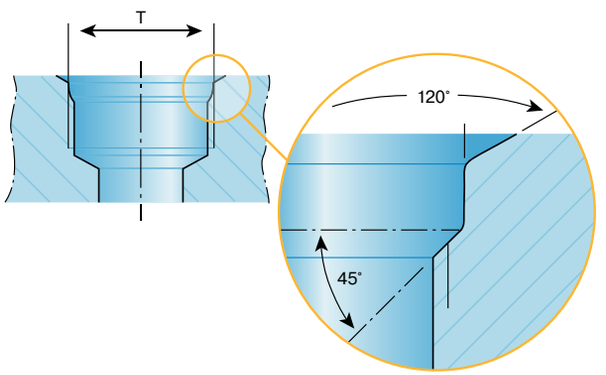

Fig. 4.6

Screw Mil-S8879 dimension T [inch]	UN-JF-3B	Tube outer diameter [inch]	Tube code no.	O-ring dimension d_1 [mm]	O-ring dimension d_2 [mm]	Parker order code
0.3125 - 24		0.125	2	6.07	1.63	3-902
0.3750 - 24		0.188	3	7.65	1.63	3-903
0.4375 - 20	●	0.250	4	8.92	1.83	3-904
0.5000 - 20		0.320	5	10.52	1.83	3-905
0.5625 - 18		0.375	6	11.89	1.98	3-906
0.6250 - 18		0.438	7	13.46	2.08	3-907
0.7500 - 16	●	0.500	8	16.36	2.21	3-908
0.8125 - 16	●	0.562	9	17.93	2.46	3-909
0.8750 - 14	●	0.625	10	19.18	2.46	3-910
1.0000 - 12	●	0.688	11	21.92	2.95	3-911
1.0625 - 12		0.750	12	23.47	2.95	3-912
1.1875 - 12		0.875	14	26.59	2.95	3-914
1.3125 - 12	●	1.000	16	29.74	2.95	3-916
1.5000 - 12	●	1.125	18	34.42	2.95	3-918
1.6250 - 12		1.250	20	37.47	3.00	3-920
1.8750 - 12		1.500	24	43.69	3.00	3-924
2.2500 - 12		1.750	28	53.09	3.00	3-928

Tab. 4.10 O-Ring dimensions according to MS 33649

4.2.5 O-Ring seals for MS 33656, compression fittings

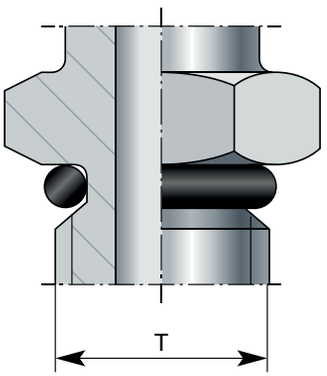

Fig. 4.7

Imperial thread Dimension T [inch]	Tube outer diameter [inch]	O-ring dimension d_1 [mm]	O-ring dimension d_2 [mm]	Parker order code
5/16 - 24	1/8	6.07	1.63	3-902
3/8 - 24	3/16	7.65	1.63	3-903
7/16 - 20	1/4	8.92	1.83	3-904
1/2 - 20	5/16	10.52	1.83	3-905
9/16 - 18	3/8	11.89	1.98	3-906
3/4 - 16	1/2	16.36	2.21	3-908
7/8 - 14	5/8	19.18	2.46	3-910
1 1/16 - 12	3/4	23.47	2.95	3-912
1 3/16 - 12	7/8	26.59	2.95	3-914
1 5/16 - 12	1	29.74	2.95	3-916
1 5/16 - 12	1 1/4	37.47	3.00	3-920
1 7/8 - 12	1 1/2	43.69	3.00	3-924
2 1/2 - 12	2	59.36	3.00	3-932

Tab. 4.11 O-Ring dimensions according to MS 33656

Tel: +45 63 12 83 00 | Email: ps@hymatik.com | www.hymatik.com | Hvidkaervej 27a, DK-5250 Odense SV, Denmark

4.3 Parbak® Back-up rings

4.3.1 Introduction

Back-up rings are used in combination with O-rings, they are not seals themselves. The O-ring cross-section is diametrically deformed when installed, in order to ensure the resilience of the sealing function (fig. 4.8 top left). When the medium exerts its pressure, the O-ring is deformed towards the gap between the two parts, thus improving the sealing effect (fig. 4.8 top right). If the limits are reached (pressure too high, gap too large), the O-ring will be compressed in the gap (fig. 4.8 bottom left). If pressure continues to rise (fig. 4.8 bottom right), the O-ring will be damaged by the compression to such an extent that it will not retain its elastic memory when pressure is released.

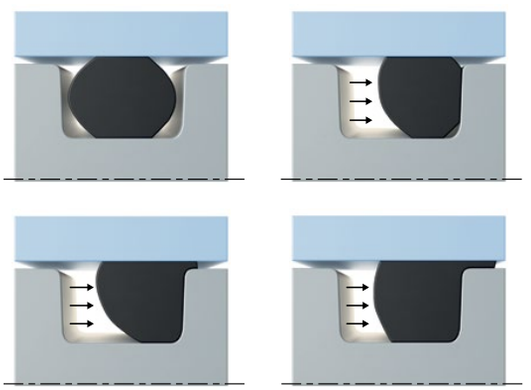

Fig. 4.8

Repeated high pressurisation will eventually lead to the complete destruction of the O-ring (see section 10.2 “Extrusion”). This will cause seal failure. Back-up rings are used to prevent this. They reduce the gap on the non-pressurised side of the O-ring seal.

Parbak® back-up rings from Parker are profiled, seamless and manufactured within tight tolerances.

O-rings used in conjunction with Parbak® back-up rings are able to resist much higher pressures than O-rings by themselves (see fig.).

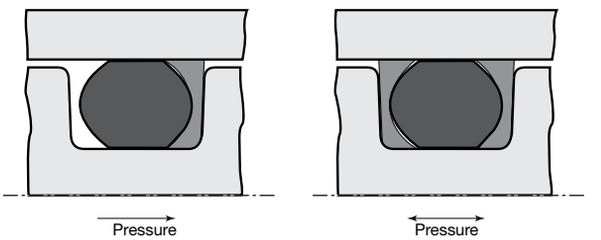

Fig. 4.9 Function of an O-Ring-Parbak® combination

Advantages of Parbak® back-up rings
Parbak® back-up rings are made from hard elastomer compounds. In combination with their profiling, plus their continuous and seamless design, this provides the O-ring with major resistance to gap extrusion. As a result, seal effectiveness and service life are improved and the application potential is extended.

- The significant hardness and the supporting profile of a Parbak® back-up rings cause the O-ring to nearly retain its round shape, even under high pressure (fig. 4.9). This improves the sealing effect and increases seal life, particularly under higher pressures.
- Pressure and gap are relative to each other with respect to extrusion. Therefore, Parbak® back-up rings can be used either to control higher pressure or to allow larger tolerances, i.e. larger gaps, at the same pressure. This reduces production costs of the groove.
- Parbak® back-up rings are elastic, as they are manufactured from similar elastomers as O-Rings. Although they feature a continuous design, they can be stretched and therefore are easily installed.
- Parbak® back-up rings are continuous. This means that, even at very high pressure, O-rings are not damaged by the sharp edges of split back-up rings. As a result, Parbak® back-up rings yield longer service life compared with other back-up rings.
- Parbak® back-up rings yield cost benefits compared with other back-up rings.
- Parbak® compounds are made from compounds which are largely abrasion-proof. This is important for lubrication and therefore seal life, as even small surface pores and irregularities of the mating surfaces remain as “lubricant pockets”. Parbak® back-up rings actually support lubrication. The Parbak® compound absorbs a small amount of the medium, which is retained between the O-ring and the back-up ring and covers the dynamic surfaces with a lubrication film.
- In contrast, other types of back-up rings (e.g. PTFE types) fill the micro-fine metal pores and provide a smooth, wax-like surface that prevents absorption of the lubricant and accelerates O-ring wear. This risk does not exist with Parbak® back-up rings.

Tel: +45 63 12 83 00 | Email: ps@hymatik.com | www.hymatik.com | Hvidkaervej 27a, DK-5250 Odense SV, Denmark

4 O-rings and Parbak® back-up rings

Design information

1. Hardness is one of the criteria for O-ring wear in dynamic applications. Compounds with 70 to 80 Shore A hardness are best suited. Harder O-rings are less able to accommodate surface irregularities, which leads to a tendency for leakage, in particular with low pressure or when unpressurised. In addition, harder O-rings have greater start-up friction and are therefore subjected to more severe wear. O-rings that have hardness values below the range of 70 or 80 Shore A have lower start-up friction but are less resistant to abrasion.
2. Softer O-rings in hardness range between 70 and 80 Shore A offer more favourable sealing properties than very hard O-rings but under high pressures may be damaged by extrusion. In combination with Parbak® back-up rings even softer O-rings can be safely used under high pressures.
3. The Parbak® order numbers correspond to the Parker O-ring 2-xxx series, with which they are assembled. The order number for standard compound N0300-90 a Parbak® back-up ring corresponding to an O-ring 2-211 is 8-211, N0300-90.
4. The groove width b_1 or b_2 can be found in table 4.12.
5. The surface finish for dynamic applications should be taken from table 4.13. As a general rule, the service life of O-rings and back-up rings is extended in accordance with the quality of the surface finish. The surface finish roughness should never be less than $R_{max.}$ = 0.5 µm , as it would be too smooth for the lubricating film to adhere to it. An insufficient lubricating film can lead to the rapid wear of the O-ring.
6. Whenever possible, two Parbak® back-up rings should be provided to reduce the risk of incorrect fitting.
7. If pressure is applied on from one side and only one back-up ring is used, then the O-ring from the perspective of the direction of pressure must be installed in front of the back-up ring. In other words in the following order: pressure – O-ring – Parbak® back-up ring (with its profiled surface facing the O-ring).
8. The corner radius R at the groove base should be as small as possible, taking into account the strength conditions and the workability of the parts.
9. The O-ring must be selected to suit the application and take all factors into account (e.g. pressure, temperature, contact medium, velocity, size, etc.).

Back-up ring dimension	W	Groove width b_1 one anti-extrusion ring	Groove width b_2 two anti-extrusion rings
	[mm]	[mm]	[mm]
8-006 - 8-050	1.35	3.5 - 3.7	4.6 - 4.8
8-102 - 8-178	2.18	4.7 - 4.9	5.8 - 6.0
8-201 - 8-284	3.00	5.8 - 6.0	6.8 - 7.0
8-309 - 8-395	4.65	8.7 - 8.9	10.2 - 10.4
8-425 - 8-475	5.99	12.0 - 12.2	14.4 - 14.6

Tab. 4.12 Modified groove widths are necessary when using Parbak® back-up rings

Surface	Pressure	Static seal		Dynamic sealing	
		Surface finish roughness, percentage contact area t_p > 50 %		Surface finish roughness, percentage contact area t_p > 50 %	
		R_a	$R_{max.}$	R_a	$R_{max.}$
A contact surface	non-pulsating	1.6	6.3	0.4	1.6
A contact surface	pulsating	0.8	3.2	0.4	1.6
B groove base and sides	non-pulsating	3.2	12.5	1.6	6.3
B groove base and sides	pulsating	1.6	6.3	1.6	6.3

Tab. 4.13 Surface finish for O-Ring seals

Permissible pressure ranges

Fig. 4.10 shows the extrusion characteristics for O-rings made from elastomers of various degrees of hardness depending on pressure and the maximum diametrical clearance. If so-called "breathing" is expected, which could be the case with a cylinder under very high pressure, this must also be taken into account.

Example: O-Ring compound N0674-70 (70 Shore A)
Working pressure: 100 bar
Diametrical clearance: 0.36 mm max. according to the tolerances shown in the drawing and 0.40 mm when "breathing"

The operating pressure at the intersection of the vertical line for a 0.4-mm diametrical clearance with the 70 Shore A hardness curve is approximately 38 bar. Without a back-up ring, the O-Ring would therefore be pressed into the gap at any pressure above 38 bar, which would destroy the O-Ring. When Parbak® back-up rings (nominal hardness 90 Shore A) are used in addition to the O-Ring, the diagram shows a permissible pressure of approximately 140 bar.

In addition to the values given in the diagram for permissible pressure and the largest possible diameter, design requirements also recommend a safety factor in order to consider any effects that might negatively affect compression.

Compounds

Parker Parbaks® are available as standard components in compound N0300-90, an elastomer based on acrylonitrile butadiene rubber (NBR) with a hardness of 90 Shore A. Its physical properties make it suitable for a wide variety of applications:

Tel: +45 63 12 83 00 | Email: ps@hymatik.com | www.hymatik.com | Hvidkaervej 27a, DK-5250 Odense SV, Denmark

4 O-rings and Parbak® back-up rings

- Wide temperature range
- Appropriate hardness
- Long life
- Compatibility with a wide range of fluids

N0300-90 is resistant against nearly all hydraulic fluids, except fire-resistant fluids such as Skydrol and Houghto-Safe®, etc. The working temperature range is between 55 °C (-67 °F) and +100 °C (212 °F).

Other compounds
For special requirements that cannot be covered by the standard compound, specialty compounds such as E3804-90 (ethylene-propylene) or V0709-90 (fluorocarbon) are available.

Parbak® back-up rings standard sizes (8-xxx series) with tolerances for A, M, R, T and W (fig. 4.11) can be found in table 4.14.

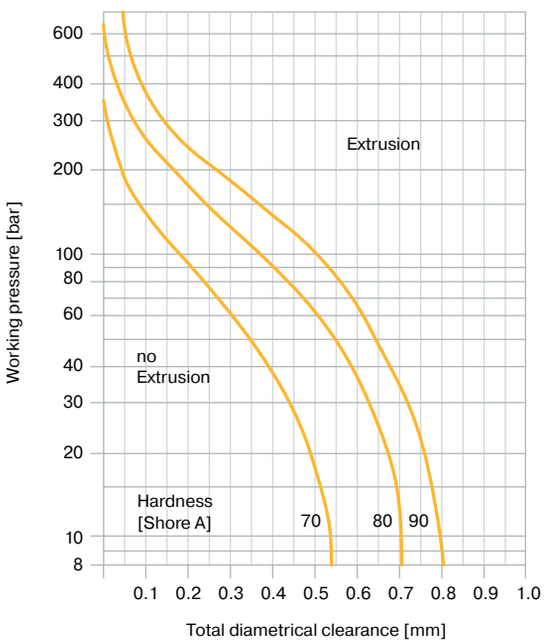

Fig. 4.10 Diagram for the design of static O-ring sealings

Please note:

1. The diagram is based on 100,000 pressure cycles at 60 cycles / min.
2. The allowable gap for silicone and fluorosilicone is half the normal recommended gap.
3. The diagram is valid for temperatures up to 70 °C.
4. Cylinder expansions under pressure have not been considered.

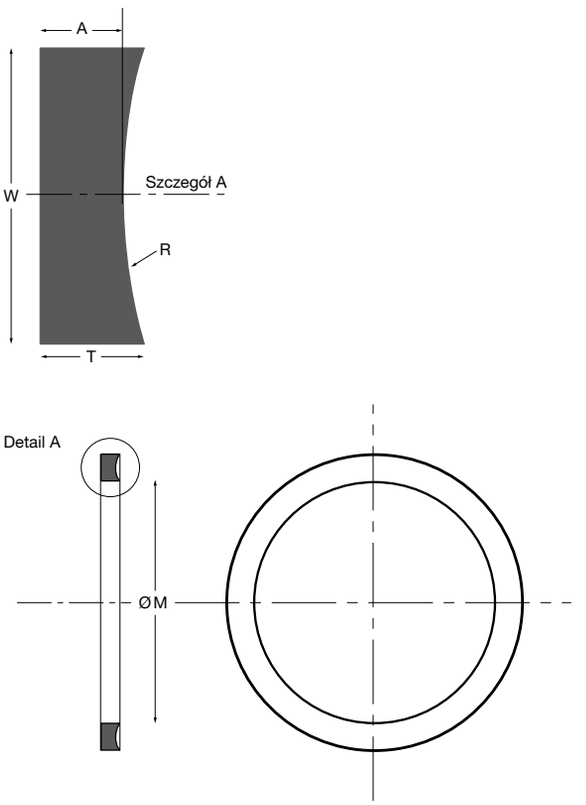

Fig. 4.11 Parbak® back-up ring

Parbak® back-up ring 8-xxx sizes

Parker no.	M (mm)	W±0.08 (mm)
8-004	2.44	1.35
8-005	3.23	1.35
8-006	3.56	1.35
8-007	4.34	1.35
8-008	5.13	1.35
8-009	5.94	1.35
8-010	6.73	1.35
8-011	8.31	1.35
8-012	9.91	1.35
8-013	11.56	1.35
8-014	13.16	1.35
8-015	14.73	1.35
8-016	16.33	1.35
8-017	17.91	1.35
8-018	19.51	1.35
8-019	21.08	1.35
8-020	22.68	1.35
8-021	24.26	1.35
8-022	25.86	1.35
8-023	27.43	1.35

Tel: +45 63 12 83 00 | Email: ps@hymatik.com | www.hymatik.com | Hvidkaervej 27a, DK-5250 Odense SV, Denmark

4 O-rings and Parbak® back-up rings

Parker no.	M (mm)	W±0.08 (mm)
8-024	29.03	1.35
8-025	30.61	1.35
8-026	32.21	1.35
8-027	33.78	1.35
8-028	35.38	1.35
8-029	38.56	1.35
8-030	41.73	1.35
8-031	44.91	1.35
8-032	48.08	1.35
8-033	51.26	1.35
8-034	54.43	1.35
8-035	57.61	1.35
8-036	60.78	1.35
8-037	63.96	1.35
8-038	67.13	1.35
8-039	70.31	1.35
8-040	73.48	1.35
8-041	76.66	1.35
8-042	83.01	1.35
8-043	89.36	1.35
8-044	95.71	1.35
8-045	102.06	1.35
8-046	108.41	1.35
8-047	114.76	1.35
8-048	121.11	1.35
8-049	127.46	1.35
8-050	133.81	1.35
8-102	1.96	2.18
8-103	2.77	2.18
8-104	3.56	2.18
8-105	4.34	2.18
8-106	5.13	2.18
8-107	5.94	2.18
8-108	6.73	2.18
8-109	8.31	2.18
8-110	9.91	2.18
8-111	11.48	2.18
8-112	13.08	2.18
8-113	14.66	2.18
8-114	16.26	2.18
8-115	17.83	2.18
8-116	19.43	2.18
8-117	21.11	2.18
8-118	22.68	2.18
8-119	24.28	2.18
8-120	25.86	2.18
8-121	27.46	2.18
8-122	29.03	2.18
8-123	30.63	2.18
8-124	32.21	2.18

Parker no.	M (mm)	W±0.08 (mm)
8-125	33.81	2.18
8-126	35.38	2.18
8-127	36.98	2.18
8-128	38.56	2.18
8-129	40.16	2.18
8-130	41.73	2.18
8-131	43.33	2.18
8-132	44.91	2.18
8-133	46.51	2.18
8-134	48.08	2.18
8-135	49.68	2.18
8-136	51.26	2.18
8-137	52.86	2.18
8-138	54.43	2.18
8-139	56.03	2.18
8-140	57.61	2.18
8-141	59.21	2.18
8-142	60.78	2.18
8-143	62.38	2.18
8-144	63.96	2.18
8-145	65.56	2.18
8-146	67.13	2.18
8-147	68.73	2.18
8-148	70.31	2.18
8-149	71.91	2.18
8-150	73.48	2.18
8-151	76.66	2.18
8-152	83.01	2.18
8-153	89.36	2.18
8-154	95.71	2.18
8-155	102.06	2.18
8-156	108.41	2.18
8-157	114.76	2.18
8-158	121.11	2.18
8-159	127.46	2.18
8-160	133.81	2.18
8-161	140.16	2.18
8-162	146.51	2.18
8-163	152.86	2.18
8-164	159.21	2.18
8-165	165.56	2.18
8-166	171.91	2.18
8-167	178.26	2.18
8-168	184.61	2.18
8-169	190.96	2.18
8-170	197.31	2.18
8-171	203.66	2.18
8-172	210.01	2.18
8-173	216.36	2.18
8-174	222.71	2.18

Tel: +45 63 12 83 00 | Email: ps@hymatik.com | www.hymatik.com | Hvidkaervej 27a, DK-5250 Odense SV, Denmark

4 O-rings and Parbak® back-up rings

Parker no.	M (mm)	W±0.08 (mm)
8-175	229.06	2.18
8-176	235.41	2.18
8-177	241.76	2.18
8-178	248.11	2.18

Tab. 4.14

Parker no.	M (mm)	W±0.1 (mm)
8-201	5.13	3
8-202	6.73	3
8-203	8.3	3
8-204	9.9	3
8-205	11.56	3
8-206	13.16	3
8-207	14.73	3
8-208	16.33	3
8-209	17.9	3
8-210	19.46	3
8-211	21.03	3
8-212	22.63	3
8-213	24.21	3
8-214	25.81	3
8-215	27.38	3
8-216	28.98	3
8-217	30.56	3
8-218	32.16	3
8-219	33.88	3
8-220	35.48	3
8-221	37.06	3
8-222	38.66	3
8-223	41.83	3
8-224	45.01	3
8-225	48.18	3
8-226	51.36	3
8-227	54.53	3
8-228	57.71	3
8-229	60.88	3
8-230	64.06	3
8-231	66.83	3
8-232	70	3
8-233	73.18	3
8-234	76.35	3
8-235	79.53	3
8-236	82.7	3
8-237	85.88	3
8-238	89.05	3
8-239	92.23	3
8-240	95.4	3

Parker no.	M (mm)	W±0.1 (mm)
8-241	98.58	3
8-242	101.75	3
8-243	104.93	3
8-244	108.1	3
8-245	111.28	3
8-246	114.45	3
8-247	117.63	3
8-248	121.11	3
8-249	124.28	3
8-250	127.46	3
8-251	130.63	3
8-252	133.81	3
8-253	136.98	3
8-254	140.16	3
8-255	143.33	3
8-256	146.51	3
8-257	149.68	3
8-258	152.86	3
8-259	159.21	3
8-260	165.56	3
8-261	171.91	3
8-262	178.26	3
8-263	184.61	3
8-264	190.96	3
8-265	197.31	3
8-266	203.66	3
8-267	210.01	3
8-268	216.36	3
8-269	222.71	3
8-270	229.06	3
8-271	235.41	3
8-272	241.76	3
8-273	248.11	3
8-274	254.46	3
8-275	267.16	3
8-276	279.86	3
8-277	292.56	3
8-278	305.26	3
8-279	330.66	3
8-280	356.05	3
8-281	381.46	3
8-282	406.12	3
8-283	431.52	3
8-284	456.92	3

Tab. 4.15

Tel: +45 63 12 83 00 | Email: ps@hymatik.com | www.hymatik.com | Hvidkaervej 27a, DK-5250 Odense SV, Denmark

4 O-rings and Parbak® back-up rings

Parker no.	M (mm)	W±0.13 (mm)
8-309	11.43	4.65
8-310	13.03	4.65
8-311	14.6	4.65
8-312	16.2	4.65
8-313	17.78	4.65
8-314	19.38	4.65
8-315	20.96	4.65
8-316	22.56	4.65
8-317	24.13	4.65
8-318	25.73	4.65
8-319	27.31	4.65
8-320	28.91	4.65
8-321	30.42	4.65
8-322	32.08	4.65
8-323	33.43	4.65
8-324	35.26	4.65
8-325	38.43	4.65
8-326	41.61	4.65
8-327	44.78	4.65
8-328	47.96	4.65
8-329	51.13	4.65
8-330	54.31	4.65
8-331	57.61	4.65
8-332	60.78	4.65
8-333	63.96	4.65
8-334	67.13	4.65
8-335	70.31	4.65
8-336	73.48	4.65
8-337	76.66	4.65
8-338	79.83	4.65
8-339	83.13	4.65
8-340	86.31	4.65
8-341	89.48	4.65
8-342	92.66	4.65
8-343	95.83	4.65
8-344	99.01	4.65
8-345	102.31	4.65
8-346	105.49	4.65
8-347	108.66	4.65
8-348	111.84	4.65
8-349	115.01	4.65
8-350	118.19	4.65
8-351	121.36	4.65
8-352	124.54	4.65
8-353	127.71	4.65
8-354	130.89	4.65
8-355	134.09	4.65
8-356	137.24	4.65
8-357	140.41	4.65
8-358	143.59	4.65

Parker no.	M (mm)	W±0.13 (mm)
8-359	146.76	4.65
8-360	149.94	4.65
8-361	153.11	4.65
8-362	159.46	4.65
8-363	165.81	4.65
8-364	172.16	4.65
8-365	178.51	4.65
8-366	184.86	4.65
8-367	191.21	4.65
8-368	197.56	4.65
8-369	203.91	4.65
8-370	210.26	4.65
8-371	216.61	4.65
8-372	222.96	4.65
8-373	229.31	4.65
8-374	235.66	4.65
8-375	242.01	4.65
8-376	248.36	4.65
8-377	254.71	4.65
8-378	267.41	4.65
8-379	280.11	4.65
8-380	292.81	4.65
8-381	305.51	4.65
8-382	330.91	4.65
8-383	356.31	4.65
8-384	381.71	4.65
8-385	406.6	4.65
8-386	432	4.65
8-387	457.4	4.65
8-388	482.75	4.65
8-389	508.15	4.65
8-390	533.55	4.65
8-391	558.95	4.65
8-392	584.02	4.65
8-393	609.42	4.65
8-394	634.82	4.65
8-395	660.22	4.65

Tab. 4.16

Parker no.	M (mm)	W±0.15 (mm)
8-425	115.6	5.99
8-426	118.77	5.99
8-427	121.95	5.99
8-428	125.2	5.99
8-429	128.3	5.99
8-430	131.47	5.99
8-431	134.65	5.99
8-432	137.82	5.99
8-433	141	5.99
8-434	144.17	5.99

Tel: +45 63 12 83 00 | Email: ps@hymatik.com | www.hymatik.com | Hvidkaervej 27a, DK-5250 Odense SV, Denmark

4 O-rings and Parbak® back-up rings

Parker no.	M (mm)	W±0.15 (mm)
8-435	147.35	5.99
8-436	150.52	5.99
8-437	153.7	5.99
8-438	159.36	5.99
8-439	165.71	5.99
8-440	172.06	5.99
8-441	178.41	5.99
8-442	184.76	5.99
8-443	191.11	5.99
8-444	197.46	5.99
8-445	203.81	5.99
8-446	216.51	5.99
8-447	229.21	5.99
8-448	241.91	5.99
8-449	254.61	5.99
8-450	267.31	5.99
8-451	280.01	5.99
8-452	292.71	5.99
8-453	305.41	5.99
8-454	318.11	5.99
8-455	330.81	5.99
8-456	343.51	5.99
8-457	356.21	5.99
8-458	368.91	5.99
8-459	381.61	5.99
8-460	394.31	5.99
8-461	406.5	5.99
8-462	419.2	5.99
8-463	431.9	5.99
8-464	444.6	5.99
8-465	457.3	5.99
8-466	470	5.99
8-467	482.7	5.99
8-468	495.4	5.99
8-469	508.1	5.99
8-470	533.5	5.99
8-471	558.9	5.99
8-472	584.3	5.99
8-473	609.7	5.99
8-474	635.1	5.99
8-475	660.5	5.99

Tab. 4.17

Other dimensions Parker no.	R (mm)	T (mm)	A (mm)
004-050	2.21	1.24	1.14
102-178	3.28	1.35	1.14
201-284	4.42	1.27	1.02
309-395	6.65	1.93	1.52
425-475	8.74	2.97	2.44

Tab. 4.18

Size tolerances Parker no.	M ±
004-009	0.15 mm
009-012	0.18 mm
012-019	0.23 mm
020-029	1.00 %
030-041	0.86 %
042-050	0.78 %
102-107	0.15 mm
108-110	0.18 mm
111-117	0.25 mm
118-128	1.10 %
129-151	0.95 %
152-164	0.78 %
165-178	0.74 %
201-204	0.18 mm
204-211	0.25 mm
212-227	1.10 %
228-235	0.90 %
236-259	0.78 %
260-277	0.74 %
278-284	0.67 %
309-315	0.25 mm
316-325	1.10 %
326-338	0.95 %
339-362	0.78 %
363-380	0.74 %
381-395	0.67 %
425-438	0.78 %
439-452	0.74 %
453-475	0.67 %

Tab. 4.19

Size tolerances Parker no.	A ± mm
004-284	0.08
309-325	0.10
425-475	0.13

Tab. 4.20

Ordering information

1. When ordering, please state both size and compound, e.g. 8-130, N0300-90.
2. Parbak® size numbers correspond to O-Rings in the 2-xxx series (e.g. 8-211, N0300-90 is fitted with the O-Ring 2-211, N0674-70).

Tel: +45 63 12 83 00 | Email: ps@hymatik.com | www.hymatik.com | Hvidkaervej 27a, DK-5250 Odense SV, Denmark

5 Other products and accessories

5.1 Rubber moulded parts

As a manufacturer of precision seals Parker draws on extensive experience in the development and processing of elastomer compounds at high levels of precision.

Therefore, custom-moulded parts can be manufactured according to customer specifications. Parker supplies moulded elastomer parts to a wide range of industries, such as automotive, electronics, measurement and control, life sciences/ medical, aerospace, food processing, hydraulics and pneumatics as well as household appliances. Parker offers customers assistance as early as in the design stage in order to minimise expenditures from planning through to production launch of moulded parts. The appropriate engineering design of the moulded part can reduce costs and allows any potential manufacturing issues to be identified and resolved at an early stage.

Wide range of compounds
Once a design is finalised, the choice of an appropriate compound is decisive for the component's subsequent service life. In order to select the appropriate compound, in particular for rubber parts, it is essential to know the precise conditions of use, as elastometer compounds can vary greatly in their physico-chemical properties. Parker offers a wide range of compounds that have been proven in a wide range of applications. This assures that customers receive the optimum compound for their particular application.

Processing to tight tolerances
Moulds are produced in-house to the tightest tolerances using the knowledge acquired from many years of processing rubber compounds. The selection of the production process therefore can be based on technical and economic factors for greater flexibility and efficiency.

Quality
Quality assurance begins with product development and ends with packaging and shipping inspections. Seven key inspection stations assure impeccable quality:

1. Receiving inspections of raw materials
2. Mixture inspection and testing
3. Monitoring of production equipment
4. Monitoring of production process based on process-relevant characteristics
5. 100 % visual inspections
6. Statistical final inspection
7. Inspection of packaging and shipping

Parker quality is only achieved if the product passes these inspection stations without defects.

5.2 Assembly grease and lubricants

The use of lubricants is an essential part of the proper installation and function of O-rings. Systematic use of suitable lubricants improves the service life and functioning of dynamic seals and supports proper seating of static seals. Therefore, Parker recommends using lubricants as an important step during seal installation to ensure optimal performance.

Lubrication reduces surface friction between the seal and the mating surfaces by up to 60%, making the seal easier to install and ensuring it properly sits in the groove. For radial seals, lubrication reduces the installation force and facilitates a smooth transition when the piston is inserted into the bore. This lowers the installation force and simultaneously minimizes the risk of damage to the seal. Parker Prädifa offers two lubricants tailored to its product portfolio that cover a wide range of applications in sealing technology.

1. The lubricant and its additives must not cause swelling or shrinking of the elastomer.
2. The lubricating ability must be maintained over the entire temperature range; meaning that the lubricant must not become too thin at high temperatures or too solid at low temperatures.
3. There must be no separation of any components that could form deposits on the sliding surfaces.
4. The lubricant should form a well-adhering sliding film that the O-ring cannot wipe off.
5. Compatibility with the system's working medium must be ensured.
6. The lubricant must not block the filters present in the system.

Parker offers two lubricants that cover a wide range of applications for greases and oils in sealing technology: Parker O-Lube and Parker Super-O-Lube.The use of lubricants is an essential part of the proper installation and function of O-rings. Systematic use of suitable lubricants improves the service life and functioning of dynamic seals and supports proper seating of static seals. Therefore, Parker recommends using lubricants as an important step during seal installation to ensure optimal performance.

Parker O-Lube
Technical Data:
- Components: 80 % mineral oil-based grease, 20 % barium stearate, max. 0.2 % water
- Pour point: -4 °C
- Flash point: 224 °C
- Recommended temperature range: -20 °C to 120 °C

Parker O-Lube is a mineral oil-based multipurpose grease suitable for a variety of applications. It has good surface adhesion and lubricating properties while also being resistant to water, acidic, and alkaline solutions. The best results are achieved when both the seals and the mating surfaces over which the

Tel: +45 63 12 83 00 | Email: ps@hymatik.com | www.hymatik.com | Hvidkaervej 27a, DK-5250 Odense SV, Denmark

5 Other products and accessories

seals slide are lubricated. This additionally protects the seal from aging and extends the life cycle of the entire component. Parker O-Lube is the ideal choice when friction points need long-lasting protection. In addition to excellent lubrication, it efficiently protects against external influences such as splash water, humidity, and contamination, depending on operating conditions. Parker O-Lube is recommended particularly for low-pressure systems with interacting and slowly oscillating or rotating seals.

Parker O-Lube is not recommended for systems with seals that are not resistant against mineral oils (IIR, EPDM).

The chemical principle "like dissolves like" is often difficult to apply in practice when selecting materials. For polar products, as commonly found in aqueous systems in the process industry, a non-polar sealing material such as EPDM is recommended. The lubricant should neither react with the aqueous product nor with the seal. For this purpose, Parker Super-O-Lube is a suitable choice.



Fig. 5.1 Parker O-Lube and Super-O-Lube

Parker Super-O-Lube
Parker Super-O-Lube is a silicone-based lubricant that complements Parker O-Lube and is compatible with all elastomers. (For silicone-based elastomers, it should only be applied as a thin film.) This lubricant exhibits particularly good adhesion to rubber and metal surfaces and covers a broad temperature range. Parker Super-O-Lube also provides improved protection against aging for unsaturated polymers, e.g., acrylonitrile-butadiene rubber (NBR), protecting against weathering and ozone exposure.
Applied as a thin film, Super-O-Lube delivers better results. It is suitable for a variety of media because it is very chemically inert. Super-O-Lube can be used under high pressures as well as in vacuum systems.

Super-O-Lube is non-toxic and can be used in systems with microfilters (up to 30 µm). Parker Super-O-Lube is available in 55 g tubes and 3.6 kg or 18 kg buckets:

Parker order no. 55 g tube: 31001100001
Parker order no. 3.6 kg bucket: 31001100002
Parker order no. 18 kg bucket: 31001100003

Technical Data:
- Components: Silicone oil
- Pour point: -33 °C
- Flash point: 321 °C
- Recommended temperature range: -55 °C to 200 °C

Silicone oil-based greases are used for special applications where mineral oils are unsuitable. Their special advantages are high temperature resistance, compatibility with many materials, and physiological harmlessness, for example, in food and medical device technology. Silicone greases are often used in combination with plastics and rubber that are not compatible with mineral oils. Parker Super-O-Lube is compatible with all elastomers. Additionally, the silicone oil offers improved protection against aging for unsaturated polymers such as NBR, e.g., against weathering and ozone. Due to its high chemical inertness, it is suitable for a variety of media. Furthermore, Super-O-Lube has been tested by the German Federal Institute for Materials Research (BAM) as suitable for use in oxygen systems at 60 °C and 100°C.

Silicone greases have some disadvantages compared to mineral oil-based lubricating greases, especially regarding lubricating properties and corrosion protection.

Parker offers the right product for every application to minimize assembly errors, seal damage, and downtime. The coordinated selection of an elastomer, seal design, and lubricant, results in the creation of durable and reliable sealing systems. A longer functional and service life can enable cost savings of up to 25 % and prevent leaks.

Product Series	O-Lube	Super-O-Lube
Application	General Purpose Grease	Special Grease
Base	Mineral oil	Silicone
Temperature range	-20 °C to 120 °C	-55 °C to 200 °C
Compounds	• NBR • HNBR • Neoprene • TPU • FKM Aflas • Parofluor®	• EPDM • NBR • HNBR • Neoprene • TPU • FKM Aflas • Parofluor®
Approvals		BAM

Tab. 5.1

Tel: +45 63 12 83 00 | Email: ps@hymatik.com | www.hymatik.com | Hvidkaervej 27a, DK-5250 Odense SV, Denmark

5 Other products and accessories

5.3 O-ring-kits

The handy carrying case with Parker O-Rings is ideally suited for repairs, assembly jobs and workshops, and finally puts an end to the search for the right O-Ring.
Parker offers it in various versions: with O-Rings in selected imperial and metric standard dimensions and appropriate materials or with customised content. Compact, well arranged and always within reach, the kit provides the appropriate materials for quick use.



Fig. 5.2 Parker O-Ring Kit

5.3.1 Parker O-Ring Kit

The O-Ring-Kit No. 2 consists of 492 O-Rings in 37 different imperial sizes. All O-rings are made from proven Parker compounds. The kit is available in three compound versions:

Base elastomer:	NBR
Parker compound:	N0552-90
Hardness:	Shore A 90
Parker order code:	360402N0552

Base elastomer:	NBR
Parker compound:	N0674-70
Hardness:	Shore A 70
Parker order code:	360402N0674

Base elastomer:	FKM (Viton)
Parker compound:	V0747-75
Hardness:	Shore A 75
Parker order code:	360402V0747

Parker O-Ring Kit – Content					
No.	Parker no.	Dimension			Quantity
		d_1		d_2	
1	2-006	2.90	×	1.78	32
2	2-007	3.68	×	1.78	32
3	2-008	4.47	×	1.78	32
4	2-009	5.28	×	1.78	32
5	2-010	6.07	×	1.78	32
6	2-011	7.65	×	1.78	32
7	2-012	9.25	×	1.78	32
8	2-110	9.19	×	2.62	13
9	2-111	10.77	×	2.62	13
10	2-112	12.37	×	2.62	13
11	2-113	13.94	×	2.62	13
12	2-114	15.54	×	2.62	13
13	2-115	17.12	×	2.62	13
14	2-116	18.72	×	2.62	13
15	2-210	18.64	×	3.53	9
16	2-211	20.22	×	3.53	9
17	2-212	21.82	×	3.53	9
18	2-213	23.39	×	3.53	9
19	2-214	24.99	×	3.53	9
20	2-215	26.57	×	3.53	9
21	2-216	28.17	×	3.53	9
22	2-217	29.74	×	3.53	9
23	2-218	31.34	×	3.53	9
24	2-219	32.92	×	3.53	9
25	2-220	34.52	×	3.53	9
26	2-221	36.09	×	3.53	9
27	2-222	37.69	×	3.53	9
28	2-325	37.47	×	5,33	6
29	2-326	40.64	×	5.33	6
30	2-327	43.82	×	5.33	6
31	2-328	46.99	×	5.33	6
32	2-329	50.17	×	5.33	6
33	2-330	53.34	×	5.33	6
34	2-331	56.52	×	5.33	6
35	2-332	59.69	×	5.33	6
36	2-333	62.87	×	5.33	6
37	2-334	66.04	×	5.33	6

Tab. 5.2 O-Ring Kit No. 2 content

Tel: +45 63 12 83 00 | Email: ps@hymatik.com | www.hymatik.com | Hvidkaervej 27a, DK-5250 Odense SV, Denmark

5 Other products and accessories

Base elastomer	Parker compound	Hardness [Shore A]	Colour	General application recommendation[1)]
NBR	N0674-70	70	black	• standard compound • generally suited for hydraulic and pneumatic systems compatible with hydraulic oil, water glycol (HFC fluids) and oil in water emulsions (HFA fluids) • resistance to mineral oil and mineral oil products, animal and vegetable oils
NBR	N0552-90	90	black	
FKM	V0747-75	75	black	• standard compound • for high temperatures • hot oil • aromatic solvents • wide chemical resistance • fire-resistant fluids with phosphate ester and chlorinated hydrocarbon base • copolymer

[1)] For more information see Media Compatibility Table, (see appendix)

Tab. 5.3 Detailed information for Parker O-Ring compounds for Kit No. 2

5.3.2 O-Ring Kit No. 4

The O-Ring-Kit No. 4 conists of 382 O-Rings in 30 different imperial sizes and made from compounds of proven Parker quality.

Base elastomer: NBR
Parker compound: N0674-70
Hardness: Shore A 70
Parker order code: 370404N0674

O-Ring Kit No. 4 – Content					
No.	Parker no.	Dimension d_1		d_2	Quantity
6	2-006	2.90	×	1.78	20
7	2-007	3.68	×	1.78	20
8	2-008	4.47	×	1.78	20
9	2-009	5.28	×	1.78	20
10	2-010	6.07	×	1.78	20
11	2-011	7.65	×	1.78	20
12	2-012	9.25	×	1.78	20
110	2-110	9.19	×	2.62	13
111	2-111	10.77	×	2.62	13
112	2-112	12.37	×	2.62	13
113	2-113	13.94	×	2.62	13
114	2-114	15.54	×	2.62	13
115	2-115	17.12	×	2.62	13
116	2-116	18.72	×	2.62	13
210	2-210	18.64	×	3.53	10
211	2-211	20.22	×	3.53	10
212	2-212	21.82	×	3.53	10
213	2-213	23.39	×	3.53	10
214	2-214	24.99	×	3.53	10
215	2-215	26.57	×	3.53	10
216	2-216	28.17	×	3.53	10
217	2-217	29.74	×	3.53	10
218	2-218	31.34	×	3.53	10
219	2-219	32.92	×	3.53	10
220	2-220	34.52	×	3.53	10
221	2-221	36.09	×	3.53	10
222	2-222	37.69	×	3.53	10
325	2-325	37.47	×	5.33	7
326	2-326	40.64	×	5.33	7
327	2-327	43.82	×	5.33	7

Tab. 5.4 O-Ring Kit No. 4 content

Tel: +45 63 12 83 00 | Email: ps@hymatik.com | www.hymatik.com | Hvidkaervej 27a, DK-5250 Odense SV, Denmark

5 Other products and accessories

5.3.3 O-Ring Kit No. 6

The O-Ring-Kit No. 6 consists of 407 O-Rings in 32 different imperial sizes and made from compounds of proven Parker quality.

Base elastomer: NBR
Parker compound: N0674-70
Hardness: Shore A 70
Parker order code: 370406N0674

O-Ring Kit No. 6 – Content					
No.	Parker no.	Dimension			Quantity
		d_1		d_2	
6	2-006	2.90	×	1.78	20
8	2-008	4.47	×	1.78	20
10	2-010	6.07	×	1.78	20
11	2-011	7.65	×	1.78	20
12	2-012	9.25	×	1.78	20
14	2-014	12.42	×	1.78	20
110	2-110	9.19	×	1.78	13
111	2-111	10.77	×	2.62	13
112	2-112	12.37	×	2.62	13
113	2-113	13.94	×	2.62	13
114	2-114	15.54	×	2.62	13
115	2-115	17.12	×	2.62	13
116	2-116	18.72	×	2.62	13
117	2-117	20.29	×	2.62	13
118	2-118	21.89	×	2.62	13
210	2-210	18.64	×	3.53	10
211	2-211	20.22	×	3.53	10
212	2-212	21.82	×	3.53	10
213	2-213	23.39	×	3.53	10
214	2-214	24.99	×	3.53	10
215	2-215	26.57	×	3.53	10
216	2-216	28.17	×	3.53	10
217	2-217	29.74	×	3.53	10
218	2-218	31.34	×	3.53	10
219	2-219	32.92	×	3.53	10
220	2-220	34.52	×	3.53	10
221	2-221	36.09	×	3.53	10
222	2-222	37.69	×	3.53	10
223	2-223	40.87	×	3.53	10
224	2-224	44.04	×	3.53	10
225	2-225	47.22	×	3.53	10
226	2-226	50.39	×	3.53	10

Tab. 5.5 O-Ring Kit No. 6 content

5.3.4 O-Ring Kit No. 7

The O-Ring-Kit No. 7 consists of 408 O-Rings in 32 different metric sizes. All O-rings are made from the proven Parker compound N0674-70.

Base elastomer: NBR
Parker compound: N0674-70
Hardness: Shore A 70
Parker order code: 370407N0674

O-Ring Kit No. 7 – Content				
Dimension				Quantity
d_1		d_2		
3.00	×	2.00		20
5.00	×	2.00		20
6.00	×	2.00		18
8.00	×	2.00		18
10.00	×	2.00		18
13.00	×	2.00		18
10.00	×	2.50		14
12.00	×	2.50		14
14.00	×	2.50		14
15.00	×	2.50		14
16.00	×	2.50		14
18.00	×	2.50		14
20.00	×	2.50		14
21.00	×	2.50		14
22.00	×	2.50		14
18.00	×	3.50		10
20.00	×	3.50		10
22.00	×	3.50		10
23.00	×	3.50		10
25.00	×	3.50		10
27.00	×	3.50		10
28.00	×	3.50		10
30.00	×	3.50		10
31.00	×	3.50		10
32.00	×	3.50		10
34.00	×	3.50		10
36.00	×	3.50		10
38.00	×	3.50		10
41.00	×	3.50		10
44.00	×	3.50		10
46.00	×	3.50		10
50.00	×	3.50		10

Tab. 5.6 O-Ring Kit No. 7 content

Tel: +45 63 12 83 00 | Email: ps@hymatik.com | www.hymatik.com | Hvidkaervej 27a, DK-5250 Odense SV, Denmark

5 Other products and accessories

Further kits
Further kits for SAE-AS4395 (Tube Fitting Boss Seals) are available in compound N0552-90 (Kit no. 8, part number 370408N0552), and according to the Japanese metric standard JIS B 2401 in compound N0674-70 (Kit no. 5, part number 370405N0674).

5.4 O-Ring measuring cone and measuring tape

The measuring cone can be used for quick and accurate definition of 2-xxx O-Ring sizes up to 75 mm diameter. The reference diameter of the cross-section is easily determined using the calibrated slot in the cone base.

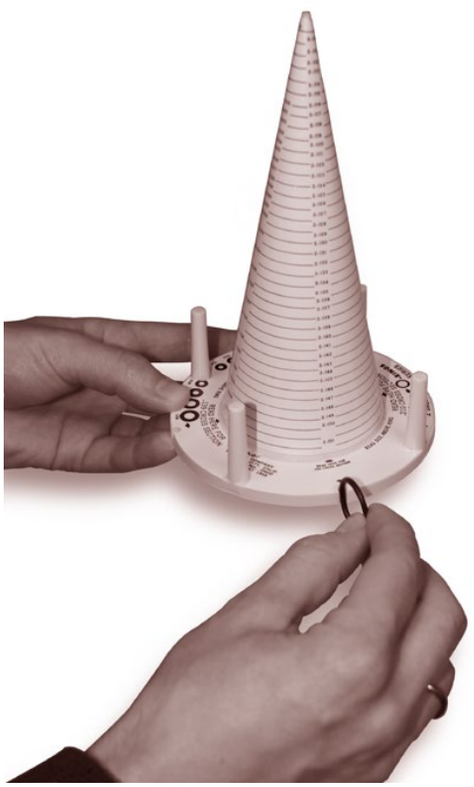

Fig. 5.3 Determination of the cross-section

Each cross-section corresponds to a measuring line on the measuring cone, e.g. cross-section 2.62 mm is the 2-1xx series. The 2-1xx series is read from the cone directly above the calibration slot for the 2.62 mm section. The corresponding inner diameter in millimetres then can be taken from the size list.

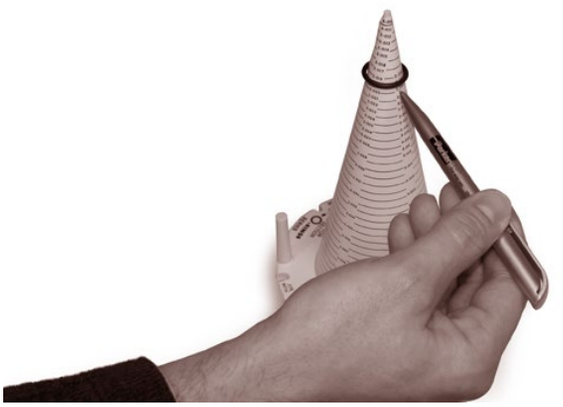

Fig. 5.4 Determination of the 2-xxx size number with the measuring cone

The measuring tape suits O-Ring diameters up to 200 mm and is used in a similar way as the cone. The different scales on the tape apply to the various cross-sections:

Parker order code measuring cone/measuring tape :
55000100000



Fig. 5.5 Determination of the O-Ring size using the measuring band

Tel: +45 63 12 83 00 | Email: ps@hymatik.com | www.hymatik.com | Hvidkaervej 27a, DK-5250 Odense SV, Denmark

5 Other products and accessories

5.5 O-Ring assembly aids

Parker has developed this tool kit to improve assembly and disassembly.
These tools make O-Ring assembly and removal much easier and help avoid damage. The two-part kit comes in a plastic wallet. A plastic version of the tool kit is also available and may be used for sensitive surfaces. (Note: The standard version is made of metal.)

Parker order code assembly aids (metal): BRASS EXTRACTION KIT
Parker order code assembly aids (plastic): PLSTC O-RING PICK



Fig. 5.6 O-Ring assembly aids

5.6 ParCoat® – the smooth approach to O-Ring assembly

ParCoat®-treated O-Rings enable frictionless automatic assembly with only a minimal exertion of force. The rings will not stick together during the feeding process and, depending on their type, can be stretched by more than 150 % without causing the anti-friction coating to break or tear.

Uncoated O-Rings, on the other hand, often require twice as much pressure, which may result in seal damage and the jamming of assembly components. Conventional surface treatment and coating techniques, such as oiling, do not sufficiently improve the sliding ability of the seals while contaminating the assembly components. Defects caused during the assembly process lead to additional costs in terms of inspections and rework which clearly exceed the relatively small extra charge for ParCoat®-treated O-Rings.

Parker's own ParCoat® C01 (standard) solution is a polymer film no thicker than a few micro-metres with outstanding sliding properties that can be applied to the seal without degrading the elasticity of the basic compound.

Depending on the contact medium, the coating may disintegrate into tiny particles some time after assembly. This disintegration will neither contaminate the medium nor lead to any malfunctions. Exposure trials involving three different test media, followed by a subsequent particle count, have confirmed that there is no difference between the media before and after exposure to ParCoat®.

Benefits
- Greatly reduced frictional forces
- No damage to seals during installation or assembly
- Faster, more cost-efficient assembly process
- Improves interfacial seal tightness, especially for sealing against gases
- Seals will not stick together during automatic feeding process
- No contamination
- Translucent ParCoat®-coating prevents risk of mixups as the basic elastomer compound colour remains visible
- Elongation capacity above 150 %, depending on type
- Suitable for nearly all standard elastomer types
- Available in different colours

Furthermore, the coating is translucent, enabling the elastomers to be identified by their specific colours, thus precluding the risk of mix-ups.

It is typically applied during initial, automatic and multiple assembly processes. Due to its minimal thickness, ParCoat® C01 is not suitable for achieving permanent improvements of sliding ability in dynamic sealing applications, for instance.

ParCoat® surface treatment has been integrated into regular manufacturing processes, thus ensuring full-scale in-process controls, flexibility and short lead times. Parker produces coated O-Rings from nearly all standard compounds.

Application examples
Automotive engineering:
- Air-conditioning lines
- Fuel system quick couplings
- Sensors
- Electrical connections

Industrial applications:
- Valves and instruments
- Plug connectors
- Measuring devices
- Fittings

Tel: +45 63 12 83 00 | Email: ps@hymatik.com | www.hymatik.com | Hvidkaervej 27a, DK-5250 Odense SV, Denmark

5 Other products and accessories

ParCoat®-Type[1]	Process	Coating thickness [µm]	Appearance	Use[2]			Preferred compounds	Contamination of feeding equipment	Colour
				Feeding	Installation	Multiple assembly			
ParCoat® EH	elastomer resin	< 5	solid,dry				all	no	translucent
ParCoat® SIH	multi component varnish	5 - 3	solid,dry				EPDM, NBR, FKM, VMQ	no	black,translucent
ParCoat® LST	standard varnish	5 - 30	solid,dry				EPDM, NBR, FKM, VMQ	no	translucent,semi-matt
ParCoat® SFR	silicone-free varnish	5 - 10	solid,dry				EPDM, NBR, FKM, VMQ	no	milky translucent
ParCoat® PLU	plasma polymerisation USP	-	solid,dry				EPDM, NBR, VMQ	no	like basic compound
ParCoat® PLS	standard plasma polymerisation	-	solid,dry				EPDM, NBR, VMQ	no	like basic compound
ParCoat® HA	halogenation	-	solid,dry				unsaturated (e.g. NBR)	no	like basic compound
ParCoat® TFE	PTFE-coating	25 - 40	solid,dry	++	++	++	all	no	grey and other colours
ParCoat® SIE	Si-emulsion	-	oily	+	0	+	all except VMQ	high	translucent
ParCoat® FDA	silicone-free varnish	20 - 30	solid,dry	++	+	+	all	no	translucent

[1] Further ParCoat® types on demand

[2] -: not recommended, 0: moderately suitable, +: suitable, ++: highly suitable

Tab. 5.7 ParCoat® coatings and surface treatment processes

Tel: +45 63 12 83 00 | Email: ps@hymatik.com | www.hymatik.com | Hvidkaervej 27a, DK-5250 Odense SV, Denmark

6 Elastomeric sealing compounds

6.1 General information

Knowledge of the mechanical requirements and the media (hydraulic fluid, greases, solvents, water, etc.) which the material will come into contact with is important for selecting the appropriate material.

The vast majority of the seals consist of polymer materials. Polymers are macromolecules that are built up by linking small molecular units called monomers. This linking can occur through polymerization, polyaddition, or polycondensation.

- Macromolecules can consist of identical or different monomers. When polymerization occurs from identical monomers, the result is called a homopolymer. An example of this is polyethylene (PE) which consists of ethylene. If polymerization occurs from different monomers – two or more – the result is called a copolymer. An example of this is ethylene-propylene rubber (EPDM) which consists of ethylene and propylene.
- Essentially, there are three types of copolymers. The differentiation between them depends on the arrangement of the various monomers (e.g. A and B) in the macromolecule of the copolymer:

- Statistical copolymers (random arrangement of monomers)
- Block copolymers (monomer arrangements in blocks or segments)
- Graft copolymers (subsequent polymerisation of monomers as side chains onto an existing main polymer chain)

-A-A-B-A-B-B-A-A-A-B-B-A-B-

Statistical copolymers

-A-A-A-A-B-B-B-B-B-A-A-A-

Block copolymers

-A-A-A-A-A-A-A-A-
B-B-B B-B-B

Translation missing

Fig. 6.1 Monomer arrangement in copolymers

Polymer materials can be divided into four groups according to their mechanical deformation properties at room temperature:

- Thermoplastics
- Elastomers (= rubber / cross-linked rubber)
- Thermoplastic elastomers (TPE)
- Duroplastics

Most of the materials used for seals are elastomers and thermoplastic elastomers based on block copolymers.

6.2 Overview of sealing materials

Sealing materials are modified to meet the wide range of existing sealing requirements. As depicted below, the materials used can be allocated to the groups of thermoplastics, elastomers, thermoplastic elastomers or duroplastics.

6.2.1 Thermoplastics (plastomers)

Thermoplastics are non-crosslinked macromolecules which are pliable or mouldable. To process them, the materials are fused and solidified again in a cooled mould. They are comparatively easy to process and recyclable.

As thermoplastics are used below the glass transition temperature they are hard and therefore not suitable for O-Rings in sealing applications.

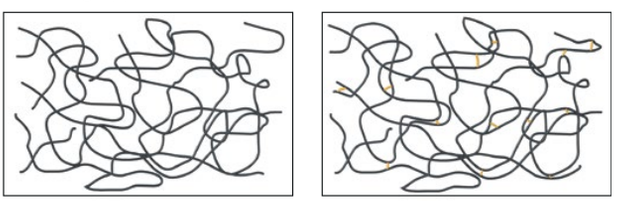

Left: non-crosslinked thermoplastics, right: wide-meshed crosslinking of elastomers

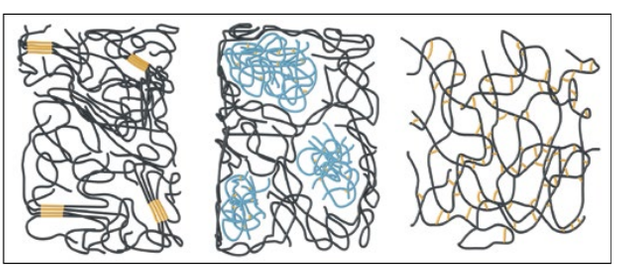

Block polymer (left), polymer blend (centre)

Thermoplastic elastomers (left and centre), duroplastics – close-meshed crosslinking (right)

Fig. 6.2 Schematic drawing of the macromolecules of polymer materials

Tel: +45 63 12 83 00 | Email: ps@hymatik.com | www.hymatik.com | Hvidkaervej 27a, DK-5250 Odense SV, Denmark

6 Elastomeric sealing compounds

6.2.2 Elastomers

The basic material of rubber compounds or elastomers is unvulcanised rubber, which is produced either as natural rubber on plantations or manufactured by the chemical industry. The most important synthetic rubbers are listed in table 6.1. For more details see section 6.6.

Elastomeric compounds consist of 50 to 60 % unvulcanised rubber based on their weight. The remainder is made up of fillers, vulcanising agents, accelerators, ageing retardants and other additives that support and modify the properties of the raw material so as to meet the particular requirements of a specific application.

Parker compound[1)]	Chemical name	Abbreviation	
		DIN ISO 1629 / ASTM D-1418-79	DIN ISO 18064
	M-Group (saturated carbon molecules in main macro-molecule chain):		
A8633-70	Polyacrylate rubber	ACM	
-	Chlorinated polyethylene rubber	CM	
-	Chlorosulfonyl polyethylene rubber	CSM	
E8556-70	Ethylene propylene diene rubber	EPDM	
-	Ethylene propylene rubber	EPM	
V0747-75	Fluoroelastomer	FKM	
V3896-70	Tetrafluorethylene propylene copolymere rubber	FEPM[2)]	
V8920-75	**Perfluoro elastomer**	FFKM	
	R-Group (unsaturated hydrogen carbon chain):		
-	Butadiene rubber	BR	
C0557-70	Chloroprene rubber	CR	
-	Isobutene isoprene rubber (butyl rubber)	IIR	
-	Bromobutyl rubber	BIIR	
B8885-70-	Chlorobutyl rubber	CIIR	
-	Isoprene rubber	IR	
N0674-70	Acrylonitrile butadiene rubber	NBR	
N3831-70	Hydrogenated acrylonitrile butadiene rubber	HNBR	
-	Natural rubber	NR	
-	Styrene-butadiene rubber	SBR	
	Q-Group (with Silicone in the main chain):		
L0677-70	Fluorosilicone rubber	FVMQ	
-	Methyl phenyl silicone rubber	PMQ	
S0383-70-	Methyl phenyl vinyl silicone rubber	PVMQ	
-	Methyl silicone rubber	MQ	
S0604-70	Methyl vinyl silicone rubber	VMQ	
	Thermoplastic elastomers (TPE)		
P5008	Polyester-urethane (thermoplastic)		TPU
P5001	Polyether/ester-urethane (thermoplastic)		TPU

[1)] Further compounds in section 6.6

[2)] Abbreviation only for ASTM D-1418-79

Tab. 6.1 The main types of synthetic rubber, their groups and abbreviations

Tel: +45 63 12 83 00 | Email: ps@hymatik.com | www.hymatik.com | Hvidkaervej 27a, DK-5250 Odense SV, Denmark

6 Elastomeric sealing compounds

Elastomers used as seals, and particularly those used in O-rings, guarantee long-term reliable sealing performance if the following design requirements are observed:

Appropriate elastomer selection
For chemical and thermal resistance to contact media, it is necessary to select the appropriate elastomer. Fig. 6.5 and 6.6 show these resistances. More detailed information can be found in the Parker Media Compatibility Table in the Appendix.

Optimised compounds with consistent properties
As the physical properties of rubber are enhanced by additives in order to meet the high demands of technical applications, even minor changes to a formulation could seriously impair the properties of an elastomer, e.g. change in hardness, tensile strength, elongation or wear resistance. To prevent this, Parker has introduced a control system. After leaving the roll mill, each material mixture receives a serial number (batch number) and is subsequently tested in the laboratory. If the result is positive the mixture is approved for production. The compound characteristics which have been determined (thickness, hardness, tensile strength, ultimate elongation) are archived. The batch number is found on every box of O-rings. In this way, a Parker O-ring can be traced back to its origin even after many years.

Optimum temperature curve during vulcanisation
During vulcanisation the material transitions from the plastic to the elastic state (see fig.) and the elastomer receives the property which is crucial for sealing: resilience (compare with compression set, section 8.6). The vulcanisation temperature determines the reaction speed. The optimum degree of cross-linking can only be achieved if the required temperature is maintained throughout the process.

6.2.3 Thermoplastic elastomers (TPE)

The creation of thermoplastic elastomers pursues the objective of combining the properties of elastomers and thermoplastics. The materials are rubber-elastic at service temperatures but are suitable for thermoplastic processing at higher temperatures.

Thermoplastic elastomers can be divided into two main groups
1. Elastomer alloys, polymer blends
2. Block copolymers

Elastomer alloys, polymer blends
TPE materials can be created by mixing non- or just slightly cross-linked rubber or by using a dynamic vulcanisation process during the mixing or blending process step of a cross-linked elastomer with a thermoplastic. This results in a material with elastomeric properties that is suitable for thermoplastic processing. Representatives of this group are summarised in the table below. The disadvantage of this low-cost processing method, however, is that compression set is typically too high for sealing applications and that dynamic resilience is impaired.

Block copolymers
Other methods aim to copolymerise rubber and thermoplastic raw materials or to synthesize polyamide, polyester, polyether or polyurethane in segments in order to achieve the desired properties profile. These copolymers share the property of physical cross-linking via inter-molecular forces. Chemical crosslinking does not take place in this case.

The use of thermoplastic polyurethanes (TPU) in the sealing industry has been steadily increasing in recent years due to the outstanding wear resistance of these materials. With respect to tear strength, tensile strength, 100 % modulus and ultimate elongation TPU materials offer advantages over standard elastomers.
For TPU, hard and soft segments are linked together through urethane bonds.

For TPU, hard and soft segments are linked together through urethane bonds. The hard segments can aggregate to form crystalline areas and to thus physically cross-link the macromolecules. At higher temperatures these areas can be cracked, which makes it possible to thermoplastically process the TPU. After moulding the finished part must be stored again at higher temperature so that the superstructures of separated hard and soft segments can form again.

By varying the hard and soft segments a large number of specifically optimised thermoplastic polyurethanes can be achieved.

Thermoplastic elastomers, compared with vulcanised elastomers, are much easier to process and to recycle due to the possibility of fusing. However, this limits their use at higher temperatures. Some properties of the most commonly used TPE types are listed in the table below.

Particularly TPU sealing materials are characterised by very high abrasion resistance. They deliver excellent dynamic performance and good weathering and media resistance. Furthermore, they have advantages in terms of gas tightness and explosive decompression. Very good ozone, oxygen and UV resistance are other important properties.

Tel: +45 63 12 83 00 | Email: ps@hymatik.com | www.hymatik.com | Hvidkaervej 27a, DK-5250 Odense SV, Denmark

6 Elastomeric sealing compounds

Elastomer alloys and blends Blends with thermoplastic polyolefines		Block copolymers	
TPO	Thermoplastic olefin elastomer, consisting of a polyolefin and an elastomer	TPU	Thermoplastic polyurethanes (aromatic or aliphatic hard segment; ether, ester, carbonate, caprolactone, or ether- and ester-based soft segment)
TPV	Thermoplastic rubber vulcanizate (consisting of a polyolefin and an elastomer; unlike TPO, the elastomer is crosslinked/vulcanized)	TPC	Thermoplastic copolyester elastomer (hard segment usually PBT, soft segment ether- and/or ester-based)
TPZ	others, not classified, e.g. EVA/PVDC, FKM/PVDF, NBR/PP, NR/PP	TPA	Thermoplastic polyamide elastomer (hard segment PA, soft segment ether- and/or ester-based)
		TPS	Thermoplastic styrene elastomer (alternating segments of styrene and butadiene or isoprene)

Tab. 6.2 The most commonly used TPE grades and their names according to ISO 18064

6.2.4 Duroplastics (duromers)

Duroplastics are three-dimensionally cross-linked macromolecules. They are hard and brittle, and allow only very low elastic deformation even when subjected to high forces up to the decomposition temperature.

To produce moulded parts the duroplastic moulding compounds are irreversibly chemically cross-linked and remain dimensionally stable up to the decomposition temperature. Compared with elastomers the cross-linking degree of duroplastics is significantly higher.

The most important duroplastics are phenoplastics, aminoplastics and cross-linked epoxy or unsaturated polyester resins. They are not used as O-rings.

6.3 Basic elastomers

6.3.1 Acrylonitrile butadiene rubber (NBR)

Trade names:

Perbunan®	Arlanxeo
Nipol®	Zeon
Europrene®	Eni Versalis

Nitrile rubber (NBR) is the general term for acrylonitrile butadiene mixed polymer. The acrylonitrile content varies in technical products (18 to 50 %) and influences the properties of the elastomer. The higher the acrylonitrile content the better the resistance to oil and fuel. At the same time, elasticity and compression set are adversely affected (see fig.).
Often a compromise is made and a medium acrylonitrile content is selected.

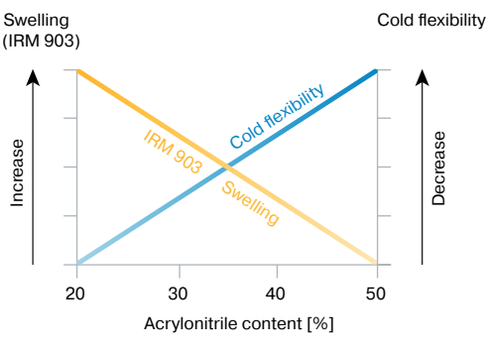

Fig. 6.3 Influence of the acrylonitrile content

NBR has good mechanical properties and high wear resistance compared with other elastomers. NBR is not resistant to weathering and ozone.
Heat resistance: up to +100 °C, shorter life +120 °C (at increased temperatures the speed of ageing accelerates, ageing in oil occurs at a slower rate than in hot air).

Cold flexibility: depending on composition between 20 °C and 55 °C

Chemical resistance against:
- Aliphatic hydrocarbons (propane, butane, petroleum oil, mineral oil and grease, diesel fuel, fuel oils)
- Vegetable and animal oils and greases
- HFA, HFB and HFC fluids
- Many diluted acids, alkali, salt solutions at low temperatures
- Water (special compounds up to +100 °C)

Not resistant against:
- Fuels with high aromatic content (for super fuels a special compound must be used)
- Aromatic hydrocarbons (benzene)
- Chlorinated hydrocarbons (trichlorethylene)
- Polar solvents (ketone, acetone, acetic acid, ethylene-ester)
- Strong acids
- Brake fluid with glycol base
- Ozone, weather and ageing resistant

Tel: +45 63 12 83 00 | Email: ps@hymatik.com | www.hymatik.com | Hvidkaervej 27a, DK-5250 Odense SV, Denmark

6 Elastomeric sealing compounds

6.3.2 Butadiene rubber (BR)

Trade names:

Buna® CB	Arlanxao
Europrene® BR	Eni Versalis
Nipol® BR	Zeon

Polybutadiene rubber (BR) is mostly used in combination with other rubbers to improve cold flexibility and wear resistance. BR is primarily used in the tyre industry, for drive belts and conveyor belts and is not suitable for use as a sealing compound.

6.3.3 Butyl rubber (IIR)

Trade names:

X Butyl	Arlanxao
Exxon™ Butyl	Exxon

Butyl rubber (isobutylene, isoprene rubber, IIR) is produced by many companies in different grades and differs widely in isoprene content. Isoprene is used for vulcanisation. Butyl has a low permeability rate and good electrical insulating properties.

Heat resistance: up to appr. 130 °C
Cold flexibility: down to appr. 70 °C

Chemical resistance against:
- Hot water and steam up to +130 °C
- Brake fluids on glycol base
- Many acids (see Media Compatibility Table in Appendix)
- Salt solutions
- Polar solutions, e.g. alcohols, ketones and esters
- Hydraulic fluids based on polyglycol (HFC fluids) and phosphate ester bases (HFD-R fluids)
- Silicone oil and grease
- Skydrol 500 and 7000
- Ozone, ageing and weather resistant

Not resistant against:
- Mineral oil and grease
- Fuels
- Chlorinated hydrocarbons

6.3.4 Missing Translation: Chlorobutyl rubber (CIIR)

Halobutyl is produced by chlorination or bromination of butyl rubber. This results in chlorobutyl (CIIR) or bromobutyl (BIIR). Halobutyl has the same properties as butyl. Additionally, it exhibits better permanent deformation resistance and can be blended with other types of rubber.

6.3.5 Chloroprene rubber (CR)

Trade names:

Baypren®	Arlanxao
Denka Chloropren	Denka

Chloroprene was one of the first synthetic rubbers and generally shows good ozone, weather, ageing and chemical resistance, good mechanical properties and an extended temperature range.

Heat resistance: up to appr. 100 °C (120 °C)
Cold flexibility: down to appr. 40 °C

Chemical resistance against:
- Mineral oil on paraffin base with low ECI (see section 8.8, e.g. ASTM oil no.1)
- Silicone oil and grease
- Water and aqueous solutions at moderate temperatures
- Refrigerants (ammonia, carbon dioxide, freon, see Media Compatibility Table in Appendix)
- Improved ozone, weathering and ageing resistance compared with NBR

Limited resistance against:
- Naphthene based mineral oil (ASTM oils no 2 and no 3)
- Low molecular aliphatic hydrocarbons (propane, butane, fuel)
- Brake fluids with glycol base

Not resistant against:
- Aromatic hydrocarbons (benzene)
- Chlorinated hydrocarbons (trichlorethylene)
- Polar solvents (ketone, ester, ether, acetone)

6.3.6 Chlorosulfonyl polyethylene rubber (CSM)

Trade name:

Toso-CSM®	TOSOH

The ethylene monomer contains additional chlorine and sulphur groups. Chlorine gives the vulcanisate flame and mineral oil resistance but also influences cold flexibility.

Heat resistance: up to appr. 120 °C
Cold flexibility: down to appr. 30 °C

Chemical resistance against:
- Many acids and alkali
- Many oxidising media
- Silicone oil and grease
- Water and aqueous solutions
- Ozone, ageing and weather resistance

Limited resistance against:
- Low molecular aliphatic hydrocarbons (propane, butane, petrol)

Tel: +45 63 12 83 00 | Email: ps@hymatik.com | www.hymatik.com | Hvidkaervej 27a, DK-5250 Odense SV, Denmark

- Mineral oil and grease, limited swelling in aliphatic oils (ASTM oil No. 1, high swelling in naphthene and aromatic oils (ASTM oils No. 2 and No. 3)

Not resistant against:
- Aromatic hydrocarbons (benzene)
- Chlorinated hydrocarbons (trichlorethylene)

6.3.7 Epichlorohydrin rubber (CO, ECO)

Trade name:
Hydrin® Zeon

Epichlorohydrin is divided into two types: the homopolymer (CO) and the copolymer (ECO). CO and ECO both have good resistance to mineral oils, fuels and ozone. The high temperature resistance is good. Compression set and corrosion tendency of the sealing face increase at +150 °C. ECO has good cold flexibility. CO has high resistance to gas permeability.

Heat resistance: up to appr. 135 °C
Cold flexibility: down to appr. 40 °C

Chemical resistance against:
- Mineral oil and grease
- Aliphatic hydrocarbons (propane, butane, fuel)
- Silicone oil and grease
- Water at room temperature
- Ozone, ageing and weather resistant

Not resistant against:
- Aromatic and chlorinated hydrocarbons
- Ketones and esters
- Non-flammable hydraulic fluids in the groups HFD-R and HFD-S
- Brake fluids with glycol base

6.3.8 Ethylene acrylate rubber (AEM)

Trade name:
Vamac® Du Pont™

Ethylene acrylate rubber is a mixed polymer of ethylene and methyl acrylate with the addition of a small amount of carboxylated cross-linking monomer. Ethylene acrylate rubber is not to be confused with polyacrylate rubber (ACM).

Heat resistance: up to 150 °C (special types up to 175 °C)
Cold flexibility: up to 40 °C

Ethylene acrylate rubber has very high resistance to ozone and oxygen. Its resistance against mineral oil is good as lower than that of most ACM grades. Ethylene acrylate swells in ASTM oil no. 1 by appr. 5 % to 10 %, and in ASTM oil no. 3 by appr. 45 % to 55 %. Ethylene acrylate rubber is not resistant against ketones, fuels and brake fluids.

Chemical resistance:
- Gear oil
- Mineral oil
- Diluted acids and bases
- Water up to 100°C
- Blow-by
- AdBlue®

Not resistant to:
- Aromatic hydrocarbons (benzene, toluene)
- Polar organic solvents (esters, ketones)
- Amines

6.3.9 Ethylene propylene rubber (EPM, EPDM)

Trade names:
Keltan® Arlanxao
Vistalon® Exxon
Dutral® Eni Versalis
Nordel® Dow Chemicals

EPM is a rubber manufactured as a copolymer of ethylene and propylene. Ethylene propylene diene rubber (EPDM) is produced using a third monomer and exhibits particularly beneficial properties for seals in phosphate ester hydraulic fluids. It is widely used in brake systems operating with glycol-based fluids.

Heat resistance: up to 150 °C (max. 180 °C in water and steam)
Cold flexibility: down to appr. -50 °C

Chemical resistance against:
- Hot water and steam up to +150 °C, special compounds up to +180 °C
- Brake fluids with glycol base up to +150 °C
- Many organic and inorganic acids
- Cleaning agents, soda and potassium alkalis
- Hydraulic fluids based on phosphate ester (HFD-R)
- Silicone oil and grease
- Many polar solvents (alcohols, ketones, esters)
- Skydrol 500 and 7000
- Ozone, ageing and weather resistant

Not resistant against:
- Mineral oil products (oils, greases and fuels)

6.3.10 Fluorocarbon rubber (FKM)

Trade names:
DAI-EL™ Daikin
Dyneon Dyneon™

Tel: +45 63 12 83 00 | Email: ps@hymatik.com | www.hymatik.com | Hvidkaervej 27a, DK-5250 Odense SV, Denmark

6 Elastomeric sealing compounds

Tecnoflon®	Solvay
Viton®	Chemours

Fluorocarbon rubber is noted for its wide range of applications. FKM has an excellent resistance against high temperatures, ozone, oxygen, mineral oil, synthetic hydraulic fluids, fuels, aromatic substances and many organic solvents and chemicals. The low temperature resistance for static applications is approx. 25 °C (some applications and/or compounds achieve effective sealing down to 55 °C). The gas permeability is very low and similar to butyl rubber. Special FPM compounds have a higher resistance against acids, fuels, water and steam.

Heat resistance: up to 200 °C and higher temperatures with shorter lifetime
Cold flexibility: down to appr. 25 °C (special types down to appr. 50 °C)

Chemical resistance against:
- Mineral oil and grease, low swelling in ASTM oils no. 1 through 3
- Fire-resistant hydraulic fluids of the HFD group
- Silicone oil and grease
- Animal and vegetable oil and grease
- Aliphatic hydrocarbons (fuel, butane, propane, natural gas)
- Aromatic hydrocarbons (benzene, toluene)
- Chlorinated hydrocarbons (trichlorethylene and carbon tetrachloride)
- Fuels, including fuels with methanol content
- High vacuum
- Very good ozone, weather and ageing resistance

Not resistant against:
- Polar solvents (acetone, methyl ether, ketone, ethyl acetate, diathyl ether, dioxane)
- Skydrol 500 and 7000
- Brake fluids on glycol base
- Ammonia gas, amine, alkalis
- Superheated steam
- Low molecular organic acids (formic and acetic acids)

6.3.11 Fluorosilicone rubber (FVMQ)

Trade names:

Silastic®	Dow Corning
Silopren®	Momentive

FVMQ contains trifluoropropyl groups as well as methyl groups. The mechanical and physical properties are very similar to VMQ.
However, fluorosilicone exhibits significantly better resistance against fuels and mineral oils and slightly less hot air resistance compared with silicone (VQM).

Heat resistance: up to appr. 175 °C (200 °C max.)
Cold resistance: down to appr. 70 °C

Chemical resistance: same as for VMQ, additionally compatible with
- Aromatic mineral oils (e. g. IRM 903 oil)
- Fuels
- Low molecular aromatic hydrocarbons (e. g. benzene, toluene)

6.3.12 Hydrogenated nitrile butadiene rubber (HNBR)

Trade names:

Therban®	Arlanxeo
Zetpol®	Zeon

HNBR is a synthetic rubber obtained from the full or partial hydrogenation of nitrile rubber (NBR). The main differences compared with NBR are higher temperature resistance (up to 150°C) and good resistance against oxidative attacks (e.g. ozone). HNBR also has very good mechanical properties.

Heat resistance: to appr. 150 °C
Cold resistance: dependent on composition, down to 50 °C

Chemical resistance against:
- Aliphatic hydrocarbons
- Vegetable and animal fats and oils
- HFA, HFB and HFC fluids
- Many diluted acids, bases and salt solutions at low temperatures
- Water and steam up to 150 °C
- Ozone, aging and weathering resistant

6.3.13 Perfluorinated rubber (FFKM)

Trade names:

Parofluor®	Parker
Kalrez®	Du Pont™

FFKM has the chemical properties of PTFE and the elastic properties of FKM rubber. The processing of perfluorinated rubber is difficult. Due to the much higher price of perfluorinated rubber compared with FKM, FFKM is only used in applications where other compound types are insufficient. Such applications (aggressive media and/or very high temperatures) exist in the semiconductor industry, measurement technology or the chemical industry, for example.

Heat resistance: up to appr. 315 °C
Cold resistance: down to appr. 15 °C, special types down to 40 °C

Chemical resistance against:
- Nearly all chemicals
- Oxygen, ozone, weather and ageing
- Very low weight loss in high vacuums at high temperatures

Tel: +45 63 12 83 00 | Email: ps@hymatik.com | www.hymatik.com | Hvidkaervej 27a, DK-5250 Odense SV, Denmark

Not resistant against:
- Chemical compounds containing fluorine (e. g. Freon 11, 12, 13, 113, 114)

6.3.14 Polyacrylate rubber (ACM)

Trade names:

HyTemp®	Zeon
Noxtite®	UNIMATIC

ACM or simply acrylate rubber consists of a base and a cross-linking monomer. The basic monomer (rubber base) contains various acrylate esters which influence the physical properties of the vulcanisates. Ethyl acrylate rubber has good heat and mineral oil resistance whereas butyl acrylate has better cold flexibility. Acrylate rubber has good resistance against mineral oil, oxygen and ozone even at high temperatures. Water resistance and cold flexibility are lower compared with NBR.

Heat resistance: up to appr. 150 °C (special types up to 175 °C)
Cold flexibility: down to appr. 40 °C

Chemical resistance against:
- Mineral oil (engine, gear box, ATF oil)
- Ozone, weather and ageing resistant

Not resistant against:
- Brake fluid with glycol base
- Aromatic substances and chlorinated hydrocarbons
- Hot water, steam
- Acids, alkalis, amines

6.3.15 Thermoplastic Polyutethane (TPU)

Trade names:

Ultrathan®	Parker

There are many different types of Thermoplastic Polyurethanes (TPU), depending on the composition of the polyoles and isocyanates used.

Ester-based TPU materials in particular are characterised by very good mineral oil resistance, excellent wear resistance, high tensile strength and high resilience.
Through modifications with other raw materials such as polyether low temperature and hydrolysis resistance can be improved. Other modifications make it possible to significantly increase the resistance against biodegradable oils such as synthetic esters as well.
Gas permeability is comparable with IIR.

Heat resistance: up to appr. 100 °C (special types up to 110 °C, short-term up to 120 °C)
Cold resistance: down to appr. 45 °C

Ultrathan® compounds exhibit no cold embrittlement, which means that Ultrathan® O-rings are not destroyed under mechanical loading (cold bending test) even clearly below the glass transition temperature.

Chemical resistance against:
- Pure, aliphatic hydrocarbons (propane, butane, naphtha); contaminations (moisture, alcohols, acidic or alkaline combinations) may chemically attack polyurethanes
- Mineral oils and greases (certain additives may chemically attack standard materials!)
- Silicone oils and greases
- Water up to 50 °C (special types up to 80 °C)
- Ozone and ageing resistant

Not resistant against:
- Ketones, esters, ethers, alcohols and glycoles
- Hot water, steam, alkali, amines and acids

6.3.16 Silicone rubber (LSR, Q, MQ, VMQ)

Trade names:

Elastosil®	Wacker
Silopren®	Momentive
Silastic®	Dow Corning

The term silicone rubber covers a large group of materials in which methyl vinyl silicone (VMQ) is the most frequently used compound. Liquid silicone rubber (LSR) also belongs in this category. It can be given almost any colour and is processed as a two-component mix. Silicone elastomers as a group have a relatively poor tensile strength, tear resistance and wear resistance. However, they have many special properties: silicones in general have good heat resistance up to +230 °C and good cold flexibility down to 60 °C, weathering resistance, good insulating and physiological properties and good to average media compatibility.

Heat resistance: up to appr. 210 °C (special types up to 230 °C)
Cold flexibility: down to appr. 60 / 55 °C (special types down to 110 °C)

Chemical resistance against:
- Aliphatic engine and gearbox oils (e.g. IRM 901)
- Animal and vegetable oils and grease
- Brake fluid with glycol base
- Fire-resistant hydraulic fluids, HFD-R and HFD-S
- Chlorinated aromatic hydrocarbons (e.g. clophene), chlorodiphenyl (incl. flame-resistant insulators, coolant for transformers)
- Water up to +100 °C
- Diluted salt solutions
- Ozone, ageing and weather resistant

Not resistant against:
- Superheated water steam above +120 °C
- Acids and alkalis

Tel: +45 63 12 83 00 | Email: ps@hymatik.com | www.hymatik.com | Hvidkaervej 27a, DK-5250 Odense SV, Denmark

6 Elastomeric sealing compounds

- Silicone oil and grease
- Low molecular chlorinated hydrocarbons (e.g. trichlorethylene)
- Aromatic mineral oil
- Fuel
- Aromatic hydrocarbons (e.g. benzene, toluene)

6.3.17 Styrene-butadiene rubber (SBR)

Trade names:

Buna SE, SL, V	Lanxess
Intol®	Eni Versalis

SBR probably is better known under its old names Buna S or GRS (government rubber styrene) and was first produced under government control between 1930 and 1950 to replace natural rubber. The basic monomers butadiene and styrene typically amount to appr. 23.5 %. About one third of the world output of SBR is used in tyre production. The use of SBR seals is typically limited to glycol-based brake fluid applications.

Heat resistance: up to appr. 100 °C
Cold flexibility: down to appr. 50 °C

Chemical resistance against:
- Water, alcohol, glycol and certain ketones (e.g. acetone)
- Brake fluid with glycol base
- Silicone oil and grease
- Diluted water solutions, weak acting acids, alkalis and salts

Not resistant against:
- Mineral oil and grease, fuels
- Aliphatic hydrocarbons such as propane, butane, pentane, hexane, heptane
- Chlorinated hydrocarbons such as chloroform, trichlorethylene, tetrachloride
- Oxidising media such as nitric acid, chromic acid, hydrogen peroxide, chlorine, bromine

6.4 Compound selection

The base rubber and hardness of an elastomer compound are crucial for its resistance against thermal, chemical and mechanical loads.
The Parker compound code, e.g. N0674-70, contains the following two key elements:

1. The type of rubber on which the compound is based is given by the prefix letter:

A	= Polyacrylate
B	= Butyl or chlorobutyl
C	= Chloroprene
E	= Ethylene propylene or ethylene propylene diene
G	= Styrene-butadiene
L	= Fluorosilicone
N	= Acrylonitrile butadiene
P	= Thermoplastic polyurethane
S	= Silicone
V	= Fluorocarbon
Y	= Epichlorhydrine

2. The hardness range of a compound is indicated by the final numbers, e. g. "70" means that the hardness range for the relevant compound is $70^{\pm 5}$ Shore A (measured on a at piece).

   The number between these two elements represents a certain mixture formulation, which guarantees that this compound is always produced according to the same composition and that this mixture has been comprehensively tested prior to Parker approval.

Selection of base rubber
Media compatibility and temperature resistance are the most important parameters for selecting a base rubber. Exact knowledge of the temperatures and media (including lubricants and cleaning agents) to which a seal will be exposed in a concrete application is the prerequisite for selecting a suitable base rubber.
The temperature ranges, for different elastomer compounds given in fig. 6.5 refer to long-term temperatures in the environment of media which have no aggressive effect on the base elastomer at these temperatures. With most types of rubber prolonged overheating of an elastomer initially leads to further cross-linking of the polymer chains, i.e. hardening and high permanent deformation. This leads to an increasing neutralization of deformation and/or compression induced restoring forces. When the remaining restoring forces are no longer sufficient leakage may occur.
Short-term excess of the permissible long-term temperatures is possible to a certain extent (conditional on media compatibility) but results in reduced lifetime (fig. 6.5).
Practically all elastomers suffer changes to a greater or lesser extent by the physical or chemical effects of media, which depend on the chemical composition of the elastomer and the medium as well as active ambient conditions. One of the main factors is temperature. The aggressiveness of the medium increases as the temperature rises.

Physical effects involve two concurrent processes:

1. Absorption of the medium by the elastomer
2. Extraction of the soluble compound ingredients (particularly plasticisers) from the elastomer

The result is a volume change, i.e. swelling or shrinkage. The degree of volume change primarily depends on the type of medium, the structure of the rubber compound, temperature, geometrical shape (material thickness), and on the stressed condition of the rubber part. In a constrained state, rubber swells significantly less (up to 50 %) than in a free state, as is the case in swelling tests.

Tel: +45 63 12 83 00 | Email: ps@hymatik.com | www.hymatik.com | Hvidkaervej 27a, DK-5250 Odense SV, Denmark

6 Elastomeric sealing compounds

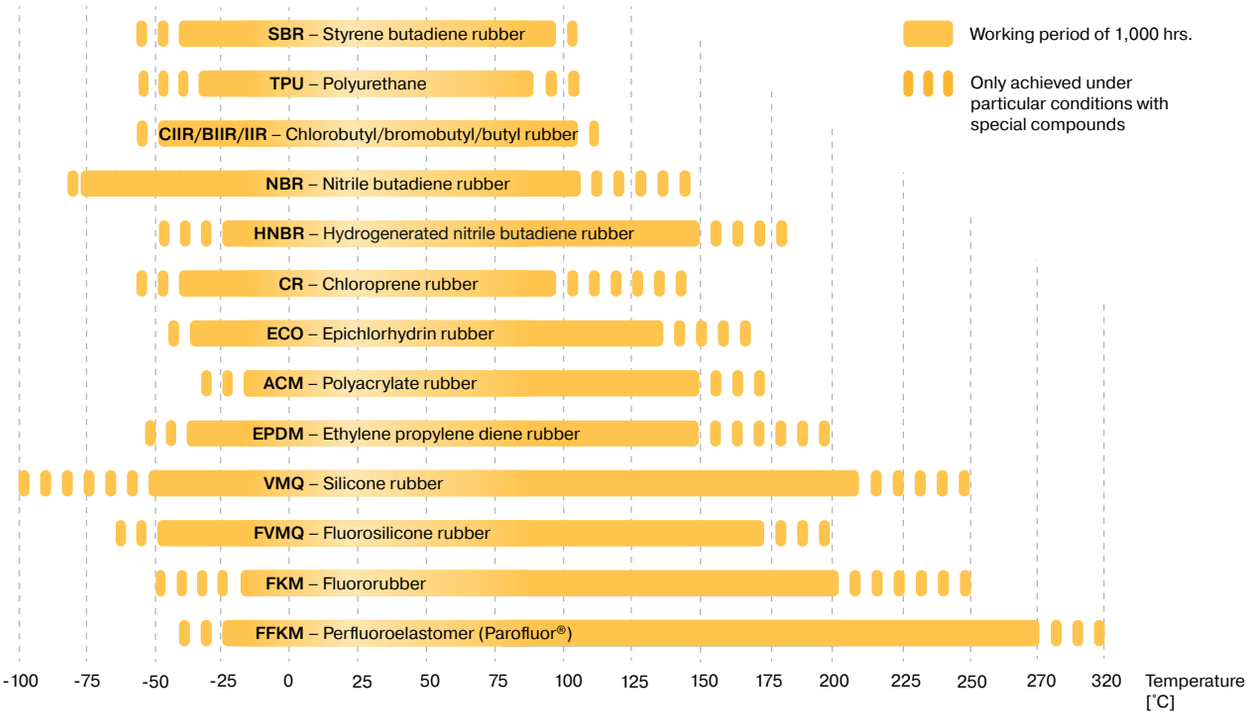

These temperature ranges are valid for applications in which contact with media that have an aggressive effect on the relevant compound is precluded.

Example: VMQ: in air up to +210 °C, in water up to +100 °C

Fig. 6.4 High-temperature limits for various elastomeric materials

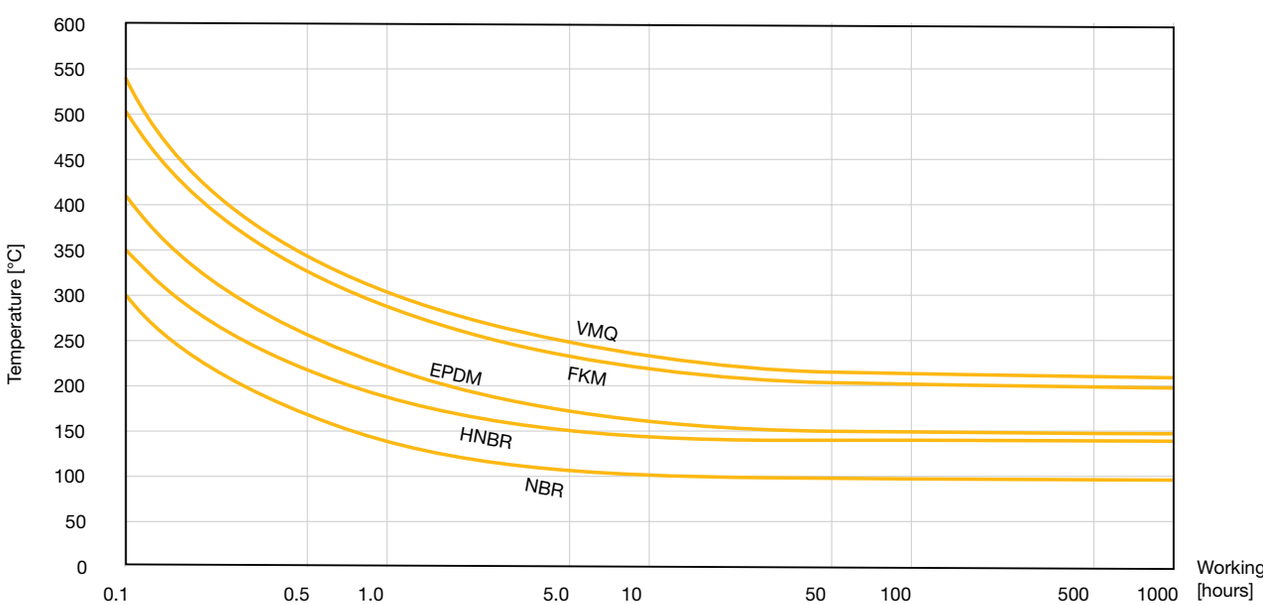

The diagram can only be used as a guideline. The actual life-span of a seal at an excessively high temperature is dependent upon the application and the medium to be sealed.

Fig. 6.5 High-temperature limits for various elastomeric materials

Tel: +45 63 12 83 00 | Email: ps@hymatik.com | www.hymatik.com | Hvidkaervej 27a, DK-5250 Odense SV, Denmark

6 Elastomeric sealing compounds

The limit of the permissible volume change depends on the application. For static seals, a volume swelling of 25 to 30 % can be tolerated. However, the fact that swelling leads to a deterioration of the mechanical properties, and in particular those properties which improve extrusion resistance, must be taken into account.
In dynamic applications, swelling leads to increased friction and a high wear rate. Therefore, a maximum swell by 10 % should not be exceeded. Shrinkage should be avoided because compression will be reduced and the risk of leakage will increase.
The extraction of plasticiser from a material sometimes can be compensated for by absorption of the contact medium. In this case, dry heat, although compensated for by absorption, can lead to excessive shrinkage and leakage when an elastomer dries out. A chemical reaction between medium and elastomer can bring about structural changes in the form of further cross-linking or degrading. The smallest chemical changes in an elastomer can lead to significant changes in physical properties, e.g. embrittlement. For this reason, the medium and the compound must be compatible in every case. The suitability of an elastomer for a specific application can be established only when the properties of both the medium and the elastomer are known under typical working conditions. If a particular material suits a medium, it is referred to as being "resistant" against that medium.
Fig. 6.5 compares the various elastomeric materials according to their resistances against frequently used media. More detailed information can be found in the Parker Media Compatibility Table (see Appendix), which lists compound recommendations for more than a thousand fluids and gases.

6.5 Compound selection according to SAE and ASTM specifications

The American Standard Classification System for Rubber Products in Automotive Applications, ASTM D 2000, is complex and somewhat difficult to use by application engineers and rubber manufacturers. The codes consisting of numbers and letters are not easy to remember or interpret. Users must code their requirements, i.e. translate them into ASTM D 2000, and manufacturers must decode them again or find them in the standard's tables. An ASTM description of a single rubber compound may have a length of several lines. This may be the reason why the system has not become widely established outside the United States, except with a few automotive manufacturers focused on the U.S. market. The industry here tends to use in-house standards tailored to the specific requirements of the companies, which are not suitable for an overarching classification system.

Polymer base	Parker compound	Hardness [Shore A]	Colour	ASTM D 2000 / SAE J 200Specification
EPDM	E0540-80	$80^{\pm5}$	black	2 AA 815 A13 F17 EA14
NBR	N0674-70	$70^{\pm5}$	black	2 BF 720 B34 EO14 EO34
NBR	N0525-60	$60^{\pm5}$	black	2 BG 620 B34 EO14 EO34 EF11 EF21 EA14
NBR	N0674-70	$70^{\pm5}$	black	2 BG 720 B14 B34 EO14 EO34 EF11 EF21 EA14
NBR	N0552-90	$90^{\pm5}$	black	7 BG 915 B14 EO14 EO34 EF11 EF21 F17
EPDM	E0529-60	$65^{\pm5}$	black	2 CA 620 A25 B44 Z1($65^{\pm5}$ Hardness)
NBR	N0674-70	$70^{\pm5}$	black	3 CH 720 A25 B34 EO16 EO36
NBR	N0552-90	$90^{\pm5}$	black	3 CH 915 B34 EO16 EO36
FVMQ	L0677-70	$70^{\pm5}$	blue	2 FK 708 A16 EA36 F19
VMQ	S0595-50	$50^{\pm5}$	red	3 GE 505 A19 B37 EO16 EO36 F16 G11 EA14
VMQ	S0613-60	$60^{\pm5}$	red	3 GE 605 A19 B37 EO16 EO36 F19 G11 EA14
VMQ	S0604-70	$70^{\pm5}$	red	7 GE 707 A19 B37 EO16 EO36 F19 G11 EA14
FKM	V0747-75	$75^{\pm5}$	black	2 HK 715 A1-10 B37 B38 EF31 EO78 F15 Z1 ($75^{\pm5}$ Hardness)
FKM	V0747-75	$75^{\pm5}$	black	4 HK 715 A1-11 B38 EF31 EO78 Z1($75^{\pm5}$ Hardness)
FKM	V0709-90	$90^{\pm5}$	black	3 HK 915 A1-10 B37 B38 EF31 EO78
FKM	V0709-90	$90^{\pm5}$	black	5 HK 915 A1-11 B38 EF31 EO78 F15
NBR	N0674-70	$70^{\pm5}$	black	SAE 120 R1 Class 1
NBR	N0552-90	$90^{\pm5}$	black	SAE J515 Type 1

[1] Compression set 20 % max. after 70 h/125 °C, evaluated on test pieces according to ASTM D 395

Tab. 6.3 Compound selection according to SAE and ASTM specifications

Tel: +45 63 12 83 00 | Email: ps@hymatik.com | www.hymatik.com | Hvidkaervej 27a, DK-5250 Odense SV, Denmark

6.6 Compounds

Compound code	Polymer base	Hard-ness [Shore A]	Colour	Temperature range static [°C]		Properties / Applications
Polyacrylate rubber (ACM)						
A8845-70	ACM	70±5	black	-20	150	
Polychloroprene Rubber (CR)						
C0557-70	CR	70±5	black	-40	100	• often used in refrigerant (e.g. R134a or R22) • good aging and salt water resistance
C0944-70	CR	70±5	red	-40	100	
Ethylene propylene rubber (EPDM)						
E0529-60	EPDM	60±5	black	-50	150	
E0540-80[1)]	EPDM	80±5	black	-50	150	• standard compound • good compression set • hot water • air to 150 °C • steam to 200 °C • dilute acids • fire-resistant hydraulic fluids • with phosphate ester base • brake fluids with non-mineral oil base
E3609-70	EPDM	70±5	black	-50	150	• standard compound • (EC) No. 1935/2004
E3678-80	EPDM	80±5	violet	-50	150	
E3804-90	EPDM	90±5	black	-50	150	• Parbak® • compound
E8556-70	EPDM	70±5	black	-50	150	• for industrial cooling water applications • improved ageing resistance
EJ820-70	EPDM	70±5	black	-50	150	FDA-compliant (not suitable for use with milk and nutritional oil)(EC) No. 1935/2004BfR XXI
E3622-50	EPDM	50±5	black	-50	150	
E8924-70	EPDM	70±5	black	-50	150	USP Class VIFDA CFR 177.2603-A(EC) No. 1935/2004BfR XXI Kat.4PAK-free
E8961-85	EPDM	85±5	black	-50	150	USP Class VIFDA CFR 177.2603-A(EC) No. 1935/2004BfR XXI Kat.4PAK-free
Nitrile butadiene (NBR)						
N0525-60	NBR	60±5	black	-35	100	
N0552-90[1)]	NBR	90±5	black	-30	100	
N0674-70[1)]	NBR	70±5	black	-35	100	• standard compound • resistance to mineral oil and mineral oil products, animal and vegetable oils • generally suited for hydraulic and pneumatic systems compatible with hydraulic oil, water glycol (HFC fluids) and oil in water emulsions (HFA fluids)
N3505-50	NBR	50±5	black	-35	100	• improved ozone and weather-proof resistance
N3575-75	NBR	75±5	black	-50	100	• low temperature with improved oil resistance
N3578-80	NBR	80±5	black	-40	100	
N9400-75	NBR	75±5	black	-35	100	ADI-freeless PAK

Tel: +45 63 12 83 00 | Email: ps@hymatik.com | www.hymatik.com | Hvidkaervej 27a, DK-5250 Odense SV, Denmark

6 Elastomeric sealing compounds

Compound code	Polymer base	Hard-ness [Shore A]	Colour	Temperature range static [°C]		Properties / Applications
Hydrogenated nitrile butadiene rubber (HNBR)						
N3510-85	HNBR	85±5	black	-35	150	
N3512-90	HNBR	90±5	black	-35	150	
N3554-75	HNBR	75±5	light green	-35	150	
N3573-75	HNBR	75±5	black	-35	150	
N3723-80	HNBR	80±5	black	-35	150	
N3813-70	HNBR	70±5	black	-40	150	• for low temperatures
N3831-70	HNBR	70±5	black	-35	150	• suitable for AdBlue® • 2) • to approx. 80 °C
N8680-90	HNBR	90±5	black	-40	150	• for low temperatures
N8888-70	HNBR	70±5	yellow	-35	150	• for gas and water application • approval for EN 549, EN 681-1
N8587	HNBR	50±5	black	-35	150	
Thermoplastic elastomers (TPE) (Ultrathan®)						
P4300	TPU	92±5	yellow	-30	110	• excellent high-temperature behaviour • excellent dynamic behaviour
P5000	TPU	94±5	dark green	-20	100	• very good hydrolysis resistance • FDA-compliant
P5001	TPU	94±5	brown	-35	100	• good hydrolysis resistance
P5007	TPU	82±5	green, translucent	-35	80	• standard compound
P5008	TPU	94±5	green	-35	100	• standard compound
P5009	TPU	94±5	grey	-45	95	• for low temperatures
P5012	TPU	90±5	red	-38	100	• good hydrolysis resistance
P5029	TPU	94±5	nature	-20	100	• very good hydrolysis resistance • FDA-compliant
P5070	TPU	83±5	green	-35	85	• good hydrolysis resistance
P5075	TPU	80±5	ochre	-45	80	• for low temperatures
P6000	TPU	95±5	grey	-35	110	• very high mechanical strength • extrusion resistance
P6030	TPU	93±5	orange	-35	105	• high mechanical strength • extrusion resistance
Silicone rubber (VMQ)						
S0595-50	VMQ	50±5	red	-55	200	
S0604-70	VMQ	70±5	red	-55	200	• standard compound • hot air to 210 °C • water to 100 °C • only suitable as static seal
S0613-60	VMQ	60±5	red	-55	200	
S0614-80	VMQ	80±5	red	-55	200	

Tel: +45 63 12 83 00 | Email: ps@hymatik.com | www.hymatik.com | Hvidkaervej 27a, DK-5250 Odense SV, Denmark

6 Elastomeric sealing compounds

Compound code	Polymer base	Hard-ness [Shore A]	Colour	Temperature range static [°C]		Properties / Applications
Liquid silicone rubber (LSR)						
S3693-50	LSR	50±5	reddish brown	-50	200	
S3695-60	LSR	60±5	reddish brown	-50	200	
S3697-40	LSR	40±5	reddish brown	-50	200	
S3698-70	LSR	70±5	reddish brown	-50	200	
S3691-80	LSR	80±5	reddish brown	-50	200	
Fluorosilicone (FVMQ)						
L0677-70	FVMQ	70±5	blue	-60	170	• for high temperatures • good low-temperature resistance • mostly fitted where fuel and oil resistance is important • predominant in aircraft
L0806-80	FVMQ	80±5	blue	-60	170	• approvals for military and aerospace applications
L3830-70	FVMQ	70±5	blue	-60	150	
Fluorocarbon (FKM)						
V0709-90	FKM	90±5	black	-25	200	
V0747-75[1)]	FKM	75±5	black	-25	200	• standard compound • for high temperatures • hot oil • aromatic solvents • wide chemical resistance • fire-resistant fluids with phosphate ester and chlorinated hydrocarbon base • copolymer
V0884-75	FKM	75±5	brown	-25	200	• copolymer
V3642-75	FKM	75±5	black	-25	200	• terpolymer
V3670-70	FKM	70±5	green	-25	200	• copolymer
V3681-80	FKM	80±5	green	-25	200	• copolymer
V8703-75	FKM	75±5	black	-30	200	• improved low temperature resistance • suitable for biodiesel (RME) applications
V9722-75	FKM	75±5	black	-25	+200	• for use in water-glycol
V9592-75	FKM	75±5	blue	-40	+200	• good low-temperature resistance
High Performance Fluoroelastomer (HiFluor® FB)						
V8879-75	FEPM	75±5	black	-15	+230	• very good chemical resistance • very good varnish stability • FDA-compliant • (EC) No. 1935/2004

Tel: +45 63 12 83 00 | Email: ps@hymatik.com | www.hymatik.com | Hvidkaervej 27a, DK-5250 Odense SV, Denmark

6 Elastomeric sealing compounds

Compound code	Polymer base	Hard-ness [Shore A]	Colour	Temperature range static [°C]		Applications / Properties
Perfluoro elastomer (Parofluor®)						
V8545-75	FFKM	75±5	black	-15	300	• best compound for hot water and steam applications • AMS 7257
V8588-90	FFKM	90±5	black	-15	260	• ED resistant • Norsok M-710
V8920-75	FFKM	75±5	black	-15	260	• good resistance in hot water • for wet processes in semiconductor applications
V8921-75	FFKM	75±5	white	-15	260	• pure compound for sterile and pharmaceutical technology • for oxidising media
FF400-80	FFKM	80±5	black	-44	230	• for low temperatures • oil and gas • chemical industries • ED resistant
V8581-85	FFKM	85±5	white	-15	+250	optimized paint, varnish and solvent stability
V8800-75	FFKM	75±5	black	-15	+280	for high temperatures

[1] *Bold printed compounds are 2-xxx standard and are available ex-stock.*

[2] *Registered trademark of VDA*

Tab. 6.4 Parker compounds and their properties

6.7 Approvals

6.7.1 Compounds for gas supply and consumer appliances

The following Parker compounds are approved by the DVGW (Deutscher Verband für Gas und Wasser e.V. – German Association for Gas and Water) for the given applications and norms.

Parker compound	Polymer	Colour	Standard
N0552-90	NBR	black	DIN EN 549
N0674-70	NBR	black	DIN EN 549, VP 406
N3578-80	NBR	black	DIN EN 549
N3829-70	NBR	black	DIN EN 549
N8902-85	NBR	black	-
N8888-70	HNBR	yellow	DIN EN 549, VP 406, VP 614
S3698-70	VMQ	red	DIN EN 549
V0747-75	FKM	black	DIN EN 549
V0884-75	FKM	brown	DIN EN 549

Tab. 6.5

6.7.2 Oxygen valves

According to tests carried out by the Deutsches Bundesamt für Materialprüfung (German Federal Authority for Material Tests) the following compounds may be used up to the specified temperatures and pressures.

Parker compound	Polymer	Colour	Working data	
			[bar]	[°C]
V0747-75	FKM	black	30	60
V9592-75	FKM	blue	40	60
Super-O-Lube	-	-	20	80

Tab. 6.6

6.7.3 Compounds for the preparation, storage and distribution of drinking water

Sealing compounds for use in drinking water and heating applications are subject to a large number of approval regulations designed to ensure their harmlessness from the stage of water extraction, treatment and transport through to the consumer's tap. Most countries in the world have issued their own drinking water regulations including specific tests and lists of approved ingredients. The regulations are complemented by physical and microbiological examinations.

Tel: +45 63 12 83 00 | Email: ps@hymatik.com | www.hymatik.com | Hvidkaervej 27a, DK-5250 Odense SV, Denmark

KTW
KTW is the recognized German standard for all devices, components and materials which contact drinking water. In addition to Germany **(KTW)**, Great Britain **(WRAS)**, the USA **(NSF61)**, France **(ACS)** and the Netherlands **(KIWA)** have published their own regulations for these applications.
Parker's O-Ring Division has developed several materials that are certified to KTW.

Parker compound	Polymer	Water contact temperature [°C]	Colour	Standard
E8876-70	EPDM	85	black	• KTW • BWGL • EN681 • WRAS • NSF • KIWA • CLP • DIN EN 16421

Tab. 6.7

6.7.4 Compounds for the food and pharmaceutical industry

Seals coming into contact with products in food, beverage and pharmaceutical production must be resistant to "CIP" (Cleaning in Place) and "SIP" (Sterilisation in Place) processes. The silicone materials are suitable for use in food applications with respect to their physiological properties because they are inert as well as odourless and tasteless. In addition to chemical and thermal resistance, the sealing compounds have to meet various national, European and international regulations.

In Germany, **The Federal Institute for Risk Assessment (BfR)** issues recommendations for ingredients, additives, residues, contaminations and permissible migration levels (migration or leaching) in foodstuffs and animal feed. According to BfR Recommendation XXI rubber articles are grouped in four categories according to the various application conditions that occur in field use (levels based on a seal's duration of contact with the food product) and one special category.

Annex I, Article 3 of **European Regulation (EC) No. 1935/2004** states that sealing elements, using good manufacturing practices, are to be produced in such a way that, under normal or foreseeable conditions of use, they will not release any components to foodstuffs in quantities that would pose a risk to human health or lead to an unacceptable alteration of the composition or an impairment of the organoleptic properties of the food products.

In Regulation (EC) No. 1907/2006 on the Registration, Evaluation, Authorisation and Restriction of Chemicals **(REACH)** chemical substances are registered, evaluated, approved and restricted in order to minimise the risk potential for consumers, such as the use of lead.

Parker has developed formulations which are **ADI-free** (free from Animal Derived Ingredients) because such ingredients may cause BSE (bovine spongiform encephalopathy).

The **American Food and Drug Administration (FDA)** defines ingredients and mass fractions with maximum extraction levels on a so-called White List. The materials marked FDA meet the requirements of FDA No. 177.2600, CFR 21 ("Rubber Articles Intended for Repeated Use").

3-A Sanitary Standards Inc. (3-A SSI) is an independent organisation dedicated to advancing hygienic equipment design for the U.S. food, beverage and pharmaceutical industries. 3-A SSI, for instance, defines standards and requirements for the development, production and use of dairy equipment. Seals for use in such equipment have to pass defined extraction tests to qualify.

The **USP (United States Pharmacopiea)** Class VI protocol certifies the biological compatibility with living organisms and thus the harmlessness of sealing materials to health. The most important test protocols are listed below:

USP Class VI, Part 88 is a biological "in vivo" reactivity test. It serves to determine the biological reaction of animals to elastomers, plastics and other polymeric materials in direct or indirect patient contact and/or the injection of specific extracts from the sealing material under test.

USP Class VI, part 87 acc. to ISO 10993-1 is a cytotoxicity or reaction test which serves to determine the biological reactivity of mammalian (animal or human) cell cultures following direct or indirect contact with elastomers, plastics and other polymeric materials or specific extracts from the material under test.
There are special applications which must not contain any **plasticisers (phtalates)** as these substances are suspected of affecting hormonal balance and being conducive to infertility, liver damage and diabetes.

Tel: +45 63 12 83 00 | Email: ps@hymatik.com | www.hymatik.com | Hvidkaervej 27a, DK-5250 Odense SV, Denmark

6 Elastomeric sealing compounds

Parker compound	Polymer	Colour	Standard
E3609-70	EPDM	black	FDA[1](EC) No. 1935/2004USP Class VI
E8743-70	EPDM	black	FDA(EC) No. 1935/2004BfRA-DI-free
E8780-80	EPDM	black	FDA[1](EC) No. 1935/2004BfR
E8790-70	EPDM	black	FDA[1](EC) No. 1935/2004BfR
P5000	TPU	green	FDA
P5029	TPU	nature	FDA
S3693-50	LSR	reddish brown	FDA(EC) No. 1935/2004BfR
S3695-60	LSR	reddish brown	FDA(EC) No. 1935/2004BfR
S3697-40	LSR	reddish brown	FDA(EC) No. 1935/2004BfR
S3698-70	LSR	reddish brown	FDA(EC) No. 1935/2004BfR
V0747-75	FKM	black	ADI-free

[1] Not suitable for use with milk and nutritional oil

Tab. 6.8

Tel: +45 63 12 83 00 | Email: ps@hymatik.com | www.hymatik.com | Hvidkaervej 27a, DK-5250 Odense SV, Denmark

7 Applications

7.1 Automotive industry

The requirements for elastomer materials in the automotive industry have always been highly application-specific. Due to the recent emergence of a variety of drive concepts, the range of applications has expanded significantly. While materials for internal combustion engines often need to deliver maximum performance – particularly in terms of chemical resistance, physical properties, and cold flexibility – other criteria are decisive for battery-electric drives. For O-rings used in fuel cells or seals for gaseous hydrogen, very specific properties are the focus. Therefore, it is more important than ever for users to provide as application data as precisely as possible in communications with their O-ring supplier. That is an essential prerequisite for systematic and efficient seal selection. The sections below present selected, commonly occurring applications in greater detail. The materials listed are exemplary and represent many other specialty materials available for the respective applications described.

7.1.1 Combustion engine

General Requirements

Temperature: –40 to 200 °C (sometimes higher)
Media: Engine oils, coolant, fuels, hot air, and mixtures of these media

Materials:

- HNBR N3831-70
- FKM V0747-75
- High-temperature FKM V8857-75
- Acid-resistant FKM V9892-70

7.1.2 Fuel system for liquid fuels

The requirements and materials vary significantly depending on the application, for example, in tanks, lines and quick couplings, fuel pumps, or injection valves.

Application	Medium	Temperature range		Compound	
		min.	max.	ISO	Parker
		[°C]			
Fuel system	Diesel fuel, petrol fuel	-30	60	FKM	VW252-65
Lines, couplings	Diesel fuel, petrol fuel	-20	200	FKM	V8792-70
		-30	200	FKM	V8973-75
		-50	175	FVMQ	L40713-70
		-50	175	FVMQ	L3355-70
		-50	175	FVMQ	L8682-70
Injection system, valves, injectors	Diesel fuel, petrol fuel	-30	200	FKM	V9736-75
		-40	200	FKM	V8781-75
		-40	200	FKM	V8802-80
		-49	200	FKM	V8908-80

Tab. 7.1 Applications in fuel systems

7.1.3 Brake system

General Requirements

Temperature: 40 °C to 150 °C
Medium: Synthetic brake fluid (e.g., DOT 4) based on glycols or glycol ethers according to the guidelines of the Department of Transportation and SAE
Materials: EPDM: E0540-80, E3804-90, E8863-70

The safety requirements for the braking system are high. Parker ensures these requirements through stringent quality standards in manufacturing.

7.1.4 Emission reduction through exhaust gas treatment

Emission reduction requirements for commercial vehicles and passenger cars are increasing worldwide. In SCR (selective catalytic reduction) systems synthetic urea (AdBlue®) is used to reduce NOx emissions. This aqueous urea solution (32.5 %) is an eco-conscious chemical used for exhaust gas purification. Parker has developed suitable compounds for applications in the field of exhaust gas aftertreatment.
EPDM or HNBR compounds are mainly used, depending on the operating temperature.
Compounds:
EPDM: E8556-70, Temperature:50 °C to 130 °C
HNBR: N8895-75, Temperature:50 °C to 150 °C

7.1.5 Thermal Management

All vehicles require thermal management systems to achieve thermal operating conditions that are as stable as possible. For robust and secure sealing of cooling systems, Parker Prädifa offers various tailored materials that exhibit particularly good temperature stability and media compatibility with coolants such as water-glycol or dielectric media used for immersion cooling of batteries, such as Novec.

Tel: +45 63 12 83 00 | Email: ps@hymatik.com | www.hymatik.com | Hvidkaervej 27a, DK-5250 Odense SV, Denmark

7 Applications

- Temperature: 40 °C (partly lower) to 150 °C (partly higher)
- Medium: Water-glycol, dielectric media
- Materials:
- EPDM E8556-70
- High-temperature EPDM E8998-70
- Low-temperature material E9363-80

7.1.6 Electrical and electronic applications

Electrical and electronic components in vehicles require sealing elements that provide reliable protection against harmful environmental influences because these components are sensitive to moisture, dirt, or dust. Shafts, housings, covers, fasteners, and cooling lines must be reliably sealed to prevent malfunctions, short circuits, electrical arcing, and in the worst case, resulting fires. Often, a flame-retardant property according to UL94 is required for the elastomer seal. Parker Prädifa offers various materials that meet this standard.

The most common elastomer types used for sealing electrical and electronic components are EPDM, HNBR, FKM, and silicone.

7.1.7 Hydrogen and fuel cells

When storing and sealing hydrogen, various challenges must be overcome. Low-permeation, mechanically robust low-temperature sealing materials, such as Parker Prädifa's polyurethane P5009 or the chlorobutyl material B8885, are indispensable for efficient and safe storage.

- Chemically highly resistant and pure seals are used for the individual components of the fuel cell stack as well as in the fuel cell's supply and exhaust lines.
- Where elastomeric or thermoplastic elastomer O-rings reach their limits due to extreme temperatures or pressures, Parker Prädifa offers suitable sealing solutions from its comprehensive range, such as PTFE or metal seals.

Materials:

- EPDM E9330-70
- CIIR E8885-70
- Hot water resistant FKM V9323-75
- PU P5009

7.2 Biomedicine

Biocompatibility according to USP Class VI and / or ISO 10993 is the central requirement for sealing materials used in biomedicine. In addition to silicone, EPDM, IR, FKM and TPE compounds are available for these uses. The sterilisation process has to be considered in the material selection as well because not all materials are suitable for all methods without limitations.

7.3 Chemical processing

In this field of application all elastomeric sealing compounds are used nowadays, from NBR to HNBR, EPDM, VMQ, FVMQ and FKM through to FFKM (high-performance perfluoroelastomers).
Due to the continuous adaptation of chemical processes regarding output volume, production efficiency and further product development, the requirements profiles of sealing components change as well.
For applications in which an FKM has been used up to now, for example, due to higher temperatures or more aggressive media only Parofluor® will deliver the desired capabilities in future.
The selected sealing compound is therefore defined by the respective specifications. Parker application engineers work with our compound lab chemists to assist you in selecting the suitable sealing compounds.

7.4 Environmentally friendly hydraulic fluids

The industry can no longer ignore the increased demand for the use of biodegradable pressure transmission media. Particularly in mobile hydraulics more and more fluids are being used which, compared to mineral oils, are marked by quicker biological degradability and lower biotoxicity. Biological degradability is defined as the oxidation of pressure fluids by micro-organisms resulting in the end products of carbon dioxide, water and bacterial matter.
CEC-L-103-A-12 (2012) and OECD 301B have become established as relevant test methods.
The media in use – often referred to as bio oils – are summarised in the following table. A potential chemical attack of the seal by the relevant hydraulic fluid can be assessed by means of storage tests.

Environmentally friendly hydraulic fluids DIN ISO 15380	
Substance	**Code**
Triglycerides (rape oil)	HETG
polyalkylene glycol	HEPG
synthetic ester	HEES
polyalphaolefins (PAO) and related hydrocarbons	HEPR

Tab. 7.2

Tel: +45 63 12 83 00 | Email: ps@hymatik.com | www.hymatik.com | Hvidkaervej 27a, DK-5250 Odense SV, Denmark

7 Applications

Hydraulic fluid	Abbreviation	Recommended compound	
		dynamic	static
Mineral oil	H, HL, HLP, HVLP	NBR, HNBR, FKM, TPU	NBR, HNBR, FKM, CR, TPU
Polyalphaolefins	PAO	NBR, HNBR, FKM	NBR, HNBR, FKM, CR
Water glycol mixture	HFC	NBR, HNBR, (FKM[1]), TPU[3]	NBR, HNBR, (FKM[1]), EPDM[2], TPU[3]
Oil-in-water emulsion	HFAE, HFAS	NBR, HNBR, FKM, TPU[3]	NBR, HNBR, FKM, TPU[3]
Water-in-oil emulsion	HFB	NBR, HNBR, FKM, TPU[3]	NBR, HNBR, FKM, TPU[3]
Organophosphate	HFD	FKM[1], EPDM[2]	FKM[1], EPDM[2]
Polyolester	HFDU	NBR, HNBR, FKM	NBR, HNBR, FKM
Synthetic ester	HEES	NBR, HNBR, FKM, TPU[3]	NBR, HNBR, FKM, TPU[3]
Triglycerides (rape oil)	HETG	NBR, HNBR, FKM, TPU[3]	NBR, HNBR, FKM, TPU[3]
Polyalkylene glycol	HEPG	NBR[1], HNBR, FKM, CR, EPDM[2]	NBR, HNBR, FKM, CR, EPDM[2]
Synthetic hydrocarbons	HEPR	NBR, HNBR, FKM, TPU	NBR, HNBR, FKM, TPU
Brake fluid	DOT-3/ DOT-4	EPDM	EPDM

[1] Test recommended

[2] Absolutely mineral oil-free

[3] Hydrolysis-stabilised material

Tab. 7.3 Overview of compounds for hydraulic fluids

7.5 Solar systems

To harness solar energy for heat generation, it is necessary to transport the generated heat using a suitable transfer medium. Various media are used for this purpose, primarily based on water or oil. Maximum heat transfer results in high system temperatures placing very high demands on the sealing materials in the connecting elements of the transfer system.
The Prädifa Technology Division offers superbly suited materials for both variants – i.e., for water- and oil-based media – designed for various temperature requirements. EPDM, FKM, and FFKM materials are used that have been specially developed and qualified for this application.

7.6 Geothermal energy

Geothermal energy refers to the use of heat stored in the crust of the Earth. The deeper the penetration of the interior structure of the Earth, the higher the temperature, which on average increases by 35 to 40 °C per kilometre of penetration depth.

Various technical methods are being used in attempts to harness this "energy". The seals operating in these applications are typically confronted with extreme conditions:

- High pressure
- High temperatures
- Chemical resistance
-

The FFKM compound V8920-75 from the Parofluor® series, for example, has proved to be a viable solution. For hot water or steam combined with aggressive media this material is the right choice.

7.7 Extreme temperatures

7.7.1 High temperatures

At temperatures which are too high for an elastomeric compound, degradation begins with a loss of seal geometry or increased wear. The tendency to swell or postcure is accelerated at high temperatures.

The changes in a compound are referred to as "ageing". The damage to a product is increased with static or dynamic deformation. Ageing results in the following phenomena:

Visual changes:
- Regular crack pattern
- Non-regular crack pattern or wrinkled surface
- High compression set

Measurable changes:
- Hardening or softening (according to compound)
- Change in physical properties (tear strength, elongation at break, modulus, etc.)

With increasing temperature the lubricating film thins because the viscosity of the fluid decreases, leading to accelerated seal wear.

Elastomers have a coefficient of thermal expansion which is approximately ten times that of metal. This means that particularly seals with a large cross-section can noticeably expand. The higher pressure exerted on the housing and running partner leads to excessive friction. Larger glands provide no relief in such cases, as preloading in cold condition may become insufficient.

Fig. 7.2 shows the temperature ranges for a variety of elastomers. Where a media compatibility is not optimal, maximum permissible temperatures may be significantly lower.

Tel: +45 63 12 83 00 | Email: ps@hymatik.com | www.hymatik.com | Hvidkaervej 27a, DK-5250 Odense SV, Denmark

7 Applications

The comparison of the elastomers in Tab 7.6 shows the temperature limits as the maximum permanent temperature in applications with some frequently used media, provided the elastomer is compatible with the relevant medium.

Compounds DIN ISO 1629	Lubricant with mineral oil base	Water	Air
NBR	100	70	90
HNBR	150 [1)]	130 [2)]	150
FKM	200 [1)]	130 [2)]	200
FFKM	200 [6)]	230	320 [2)]
EPDM	not resistant	150 (180)[5)]	150
VMQ	150 [1)]	100	210
FVMQ	175 [1)]	100	175
ECO	135	50	135
ACM	150 [1)]	- [3)]	150
CR	100	80 [4)]	90
TPU	100	50 (80)[7)]	100

[1)] At these temperatures lubricants degrade after a short time.

[2)] Special grades

[3)] High swelling at room temperature, hydrolysis at higher temperatures

[4)] Medium to high swelling depending on temperature

[5)] In steam

[6)] Compound has a higher heat resistance, but lubricant degrades at these temperatures

[7)] Hydrolysis-stabilised

Tab. 7.4 Comparison of elastomers in a compatible contact medium and max. allowable temperatures (°C)

7.7.2 Low temperatures

When cooled, rubber compounds lose their elasticity. At very low temperatures they harden and have glass-like fragility; they could shatter if struck. There is no risk of damage to O-rings stored or installed in such conditions as long as they are not subjected to any mechanical impact as freezing is reversible and the compound regains its original properties upon returning to normal temperatures.

The influence of contact media can slightly improve cold flexibility in case of a volume increase and significantly diminish it in case of a volume decrease (through extraction of the plasticiser).
Silicone (S0604-70) and fluorosilicone (L0677-70) have good cold flexibility and should be selected according to their media resistance. Due to their poor wear resistance silicones are suitable only for static applications. Further elastomers with good low-temperature flexibility are CR, EPDM and special HNBR and FKM compounds.

For O-ring compounds measurements to assess temperature-dependent changes in hardness, impact resilience and compression set have also proved to be suitable for assessing low-temperature elasticity (fig 7.3). While a multitude of methods exist for testing low-temperature resistance their comparative value and practical use is limited to a few cases. The TR10 tests carried out according to ASTM D 1329 (or ISO 2921) have proved a realistic measurement to evaluate functional temperature limits (fig 7.4). This involves 100 % stretching of a specimen and its freezing in stretched condition. Then the specimen is released at one end and the temperature is allowed to rise at a controlled rate. Upon being warmed the elastomer begins to return to its original shape. When 90 % of its elongation is reached, the corresponding temperature is the TR10 point. This means 10 % return of elasticity. Continuing the test, 50 % equals TR50, etc. Temperature at the TR10 point can be taken for all elastomers to determine a minimum functional temperature.

In practice a properly designed static seal may have a minimum functional temperature of about 10 °C lower than the TR10 point.

Tel: +45 63 12 83 00 | Email: ps@hymatik.com | www.hymatik.com | Hvidkaervej 27a, DK-5250 Odense SV, Denmark

7 Applications

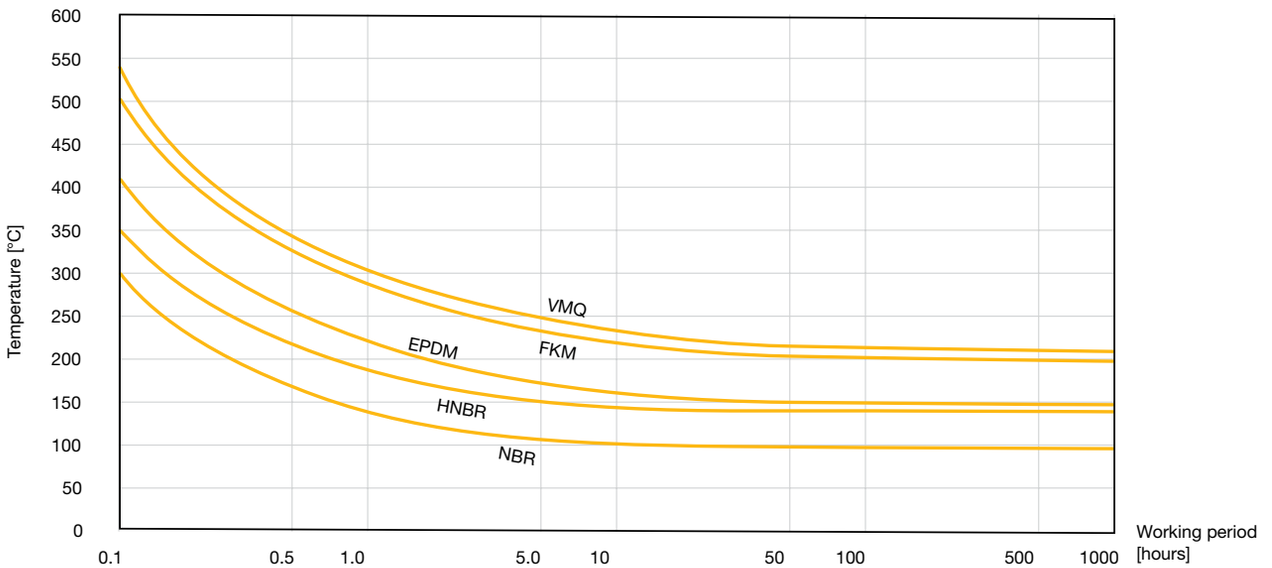

The diagram can only be used as a guideline. The actual life-span of a seal at an excessively high temperature is dependent upon the application and the medium to be sealed.

Fig. 7.1 High temperature limitations for various elastomeric materials

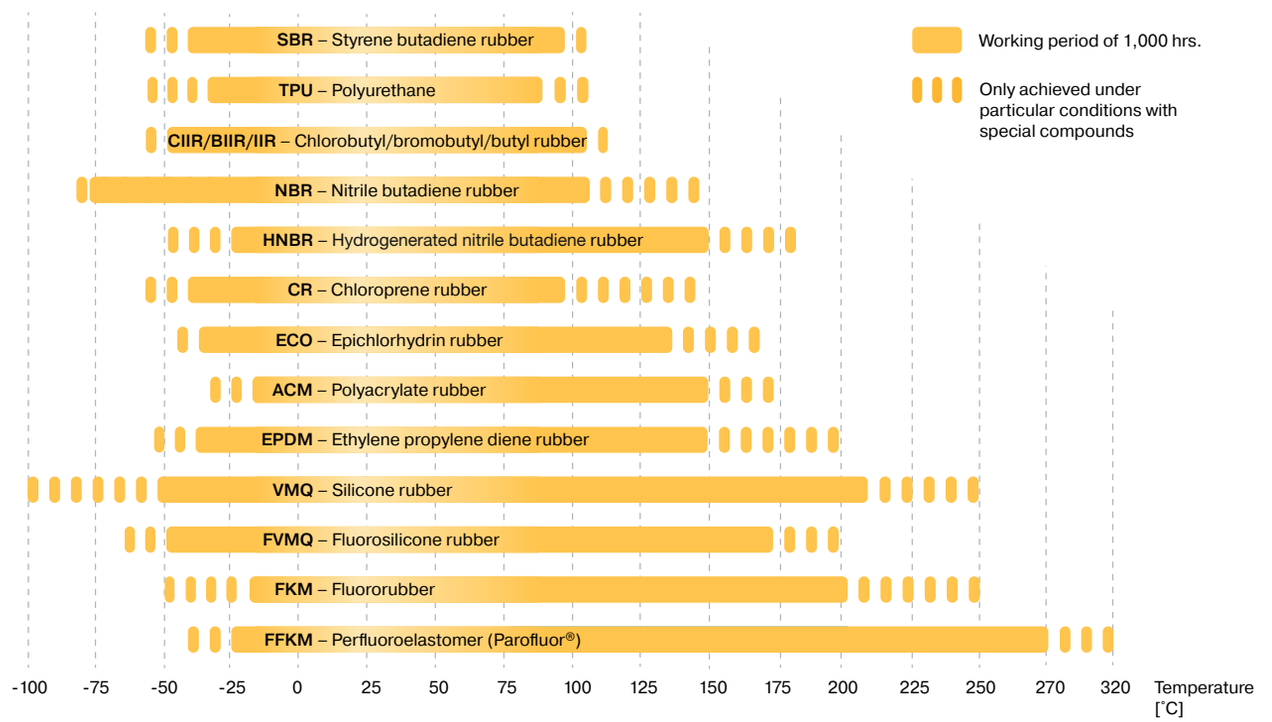

These temperature ranges are valid for applications in which contact with media that have an aggressive effect on the relevant compound is precluded.

Example: VMQ: in air up to +210 °C, in water up to +100 °C

Fig. 7.2 High-temperature limits for various elastomeric materials

Tel: +45 63 12 83 00 | Email: ps@hymatik.com | www.hymatik.com | Hvidkaervej 27a, DK-5250 Odense SV, Denmark

7 Applications

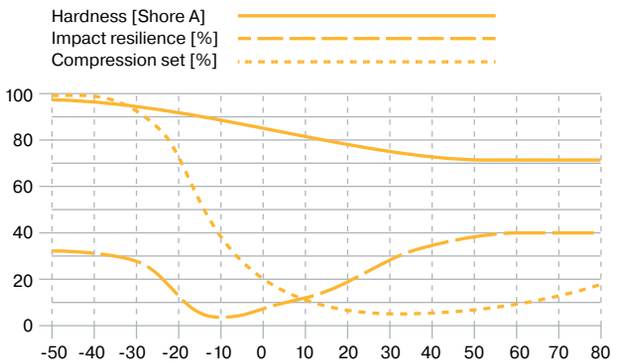

Fig. 7.3 Change in characteristics according to temperature on NBR 80

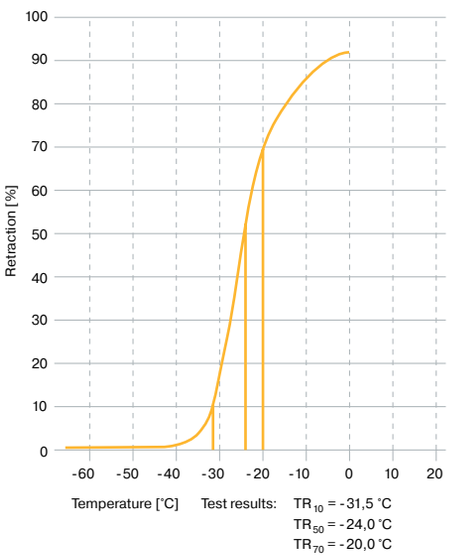

Fig. 7.4 TR test according to ASTM-D 1329 / ISO 2921 for a NBR 70 Shore A compound

7.8 Gas applications

With gas applications there is a distinction made between elastomer compounds for seals and diaphragms in gas equipment according to DIN EN 549 and sealing compounds for supply lines and components for gas and liquid hydrocarbons according to EN 682. Materials made from NBR, HNBR, FKM and silicone compounds are available with the appropriate approval.

Since natural gas is odourless per se, odorizing agents are added to enable immediate detection of leakage. New sulphur-free odorizing agents (e.g. the trade name Gasodor S-free) are more aggressive to elastomer compounds than the sulphur-based odorizing agents that are still in use. Acceptable swelling values in liquid S-free are only achieved by Parofluor® (FFKM) compounds.

7.9 Semiconductor production

In semiconductor production processes there is no place for "standard" sealing materials. Highly aggressive chemicals and gases, high temperatures, high vacuums and plasmas are all part of modern chip manufacturing. In such processes any leakage or contamination results in costly downtimes or loss of productivity.
Thanks to their superior physical properties Parofluor® materials are ideally suited for use in plasma and gas as well as thermal and wet processes.

Parker has developed special Parofluor® compounds for use in the most advanced semiconductor processes. They withstand high temperatures as well as being highly resistant to process media. The production of these seals conforms to special requirements, including the use of clean room technology. During final inspection, the parts are cleaned separately and subsequently packed in clean room conditions.

7.10 Refrigeration and air-conditioning technology, propellants

Seals used in cooling systems must be absolutely compatible with the refrigerant. The refrigerants described are coded "R" and consist of fluids based on fluorinated and chlorinated hydrocarbons.
Trade names, e.g. Freon, Frigen, Kaltron are used together with the type number. Examples: R-134a corresponds to Frigen 134a, Freon 134a, Kaltron 134a.
Fire extinguishing chemicals are designated as halon. E.g. R-13B1 corresponds to Halon 1301.

Parker compound recommendations are based on extensive testing. When filling the cooling circuit assembly instructions of the refrigerant and/or machine manufacturer must be observed.

Tel: +45 63 12 83 00 | Email: ps@hymatik.com | www.hymatik.com | Hvidkaervej 27a, DK-5250 Odense SV, Denmark

7 Applications

Medium	Recommended Parker compound	NBR	HNBR	EPDM	FKM	CR
Alkyl benzene	N3554-75, N0674-70	1	1	4	1	2
Freon, 12	C0873-70, C0557-70	2	2	3	3	1
Freon, 12 and ASTM oil no. 2 (50:50 mixture)	V1164-75	2	2	4	1	4
Freon, 12 and Sunisco 4G (50:50 mixture)	V1164-75	2	2	4	1	4
Freon, 13	C0873-70, C0557-70	1	1	1	1	1
Freon, 13B1	N0674-70	1	1	1	1	1
Freon, 14	C0873-70, C0557-70	1	1	1	1	1
Freon, 22	C0873-70, C0557-70	4	4	3	4	1
Freon, 22 and ASTM oil no. 2 (50:50 mixture)	V1164-75	4	4	4	2	4
Freon, 31	E0540-80	4	4	1	4	2
Freon, 32	C0873-70, C0557-70	1	1	1	4	1
Freon, 112	V1164-75	2	2	4	1	4
Freon, 113	N0674-70	1	1	4	2	2
Freon, 113high and low aniline oil	N0674-70	1	-	-	-	-
Freon, 114	C0873-70, C0557-70	1	1	1	1	1
Freon, 114B2	N0674-70	2	2	4	2	4
Freon, 115, 116	C0873-70, C0557-70	1	1	1	2	1
Freon, 124 (chlorotetrafluoroethane)	V3819-70	-	-	-	-	-
Freon, 125 (pentafluoroethane)	C0873-70, C0557-70	-	-	1	-	1
Freon, 134a (tetrafluoroethane)	N3554-75	-	1	1	-	-
Freon, 142b	V1164-75	2	2	4	2	-
Freon, 152a (difluoroethane)	V3819-75	-	-	-	-	-
Freon, 218	N0674-70	1	-	1	1	-
Freon, 502	C0873-70, C0557-70	2	2	1	2	1
Freon, BF	V1164-75	2	2	4	1	4
Freon, C316	N0674-70	1	-	1	1	-
Freon, C318	C0873-70, C0557-70	1	1	1	2	1
Freon, K-142b	C0873-70, C0557-70	1	1	1	4	1
Freon, K-152a	C0873-70, C0557-70	1	1	1	4	1
Mineral oil	N3554-75, N0674-70	1	1	4	1	3
PAG compressor oil	N1173-70, N3554-75	1	1	1	2	1
polyolester (POE) oil	N1173-70, N3554-75	1	1	2	2	2
R245fa+(pentafluoro propane)	C0873-70, C0557-70	-	-	-	4	1
R401a (53 % R22 / 13 % R152a / 34 % R124)	C0873-70, C0557-70	-	4	1	4	1
R401b (61 % R22 / 11 % R152a / 28 % R124)	C0873-70, C0557-70	-	-	-	-	1
R401c (33 % R22 / 15 % R152a / 52 % R124)	C0873-70, C0557-70	-	-	-	-	1
R403a (5 % R290 / 75 % R22 / 20 % R218)	C0873-70, C0557-70	-	-	-	-	1
R403b (5 % R290 / 56 % R22 / 39 % R218)	C0873-70, C0557-70	-	-	-	-	1
R404a (44 % R125 / 52 % R143a / 4 % R134a)	C0873-70, C0557-70	-	1	1	4	1
R405a (45 % R22 / 7 % R152a / 5,5 % R142b / 42,5 % RC318)	C0873-70, C0557-70	-	-	-	-	1
R406a (55 % R22 / 4 % R600a / 41 % R142b)	C0873-70, C0557-70	-	-	-	-	1
R407c (23 % R32 / 25 % R125 / 52 % R134a)	C0873-70, C0557-70	-	2	-	4	1
R407d (15 % R32 / 15 % R125 / 70 % R134a)	C0873-70, C0557-70	-	-	-	-	1
R407e (25 % R32 / 15 % R125 / 60 % R134a)	C0873-70, C0557-70	-	-	-	-	1
R408a (47 % R22 / 46 % R143a / 7 % R125)	C0873-70, C0557-70	-	-	-	-	1
R409a (60 % R22 / 25 % R124 / 15 % R142b)	C0873-70, C0557-70	-	-	-	-	1

Tel: +45 63 12 83 00 | Email: ps@hymatik.com | www.hymatik.com | Hvidkaervej 27a, DK-5250 Odense SV, Denmark

7 Applications

Medium	Recommended Parker compound	NBR	HNBR	EPDM	FKM	CR
R409b (65 % R22 / 25 % R124 / 10 % R142b)	C0873-70, C0557-70	-	-	-	-	1
R410a (50 % R32 / 50 % R125)	C0873-70, C0557-70	-	2	1	4	1
R410c	C0873-70, C0557-70	-	-	-	4	1
R411a (1,5 % R1270 / 87,5 % R22 / 11 % R152a)	C0873-70, C0557-70	-	-	-	-	1
R411b (3 % R1270 / 94 % R22 / 3 % R152a)	C0873-70, C0557-70	-	-	-	-	1
R411c+ (3 % R1270 / 95,5 % R22 / 1,5 % R152a)	C0873-70, C0557-70	-	-	-	-	1
R412a (70 % R22 / 5 % R218 / 25 % R142b)	C0873-70, C0557-70	-	-	-	-	1
R413a (9 % R218 / 88 % R134a / 3 % R600a)	C0873-70, C0557-70	-	-	-	-	1
R414a+ (51 % R22 / 28,5 % R124 / 16,5 % R142b / 4 % R600a)	C0873-70, C0557-70	-	-	-	-	1
R414b+ (50 % R22 / 39 % R124 / 9,5 % R142b / 1,5 % R600a)	C0873-70, C0557-70	-	-	-	-	1
R500 (73,8 % R12 / 26,2 % R152a)	C0873-70, C0557-70	-	-	-	-	1
R502 (48,8 % R22 / 51,2 % R115)	C0873-70, C0557-70	-	-	-	-	1
R507 / R507a (50 % R125 / 50 % R143a)	C0873-70, C0557-70	-	1	1	4	1
R509 / R509a (44 % R22 / 56 % R218)	C0873-70, C0557-70	-	-	-	-	1
R600 (n-butane)	N0674-70	1	1	4	1	1
R600a (isobutane)	N0674-70	1	1	4	1	1
R611 (Methyl formate)	C0873-70, C0557-70	4	4	2	-	2
R717 (ammonia)	C0873-70, C0557-70	4	4	2	4	2
R744 / CO_2 (Carbon dioxide)	E3804-90	2	2	1	3	2

Compatibility rating: 1 = satisfactory, 2 = fair, 3 = conditional, 4 = unsatisfactory, -= insufficient data

Tab. 7.5 Compound recommendations for refrigerants (further refrigerant compatibilities available upon request)

7.11 Food industry and pharmaceutical industry

Seals coming into contact with products in food, beverage and pharmaceutical production must be resistant to "CIP" (Cleaning in Place) and "SIP" (Sterilisation in Place) processes. The silicone materials are suitable for use in food applications with respect to their physiological properties because they are inert as well as odourless and tasteless. In addition to chemical and thermal resistance, the sealing compounds have to meet various national, European and international regulations. Further information see section "Compounds for the food and pharmaceutical industry".

7.12 Aerospace

The aerospace industry demands the most from elastomeric compounds. Special materials often must be developed to meet specification requirements. Additionally many special requirements must be met during the production of finished parts, in order to comply with stricter safety and technical demands. Parker has introduced the relevant organisational, quality and technical measures and is therefore an approved manufacturer for the civil and military aerospace industries.

Parker's experience in this sector has been gained by working with a variety of customers and being represented in a number of standardization committees.

Our application engineers are available to advise you on solutions for your specific sealing requirements.

7.13 Nuclear engineering

Elastomers which are produced for exposure to radiation must satisfy quality and material tests. In addition to radiation, the elastomer also must be compatible with the contact medium under working conditions (temperature, pressure, etc).

In the majority of applications, the radiation dosage level remains below 10^6 rad, a level which is attained after years of operation. Practically all elastomers suffer no change in their physical properties at radiation levels up to 1 M rad ($\triangleq 10^6$ rad $\triangleq 10^4$ J/kg). Parker has developed compounds with resistance to radiation levels of 10^7 rad (see section 8.22 Radiation).

7.14 Oil and gas industry

Applications in the offshore industry set new problems for seal manufacturers. Working conditions are very difficult

- Aggressive and varied contact media
- High pressures
- Wide range of temperatures

Critical conditions occur in connection with

- Oil additives causing chemical attack

Tel: +45 63 12 83 00 | Email: ps@hymatik.com | www.hymatik.com | Hvidkaervej 27a, DK-5250 Odense SV, Denmark

- Explosive decompression (see “Explosive decompression” in section 10)
- Clearance gap extrusion at high pressure
- High and low temperatures

Working conditions vary greatly to location and function.
Temperatures: up to +200 °C, plus peaks
Working pressures: 100 to 1000 bar and higher
Compounds: FKM: V0747-75, V0709-90
NBR: N0674-70, N0552-90
Specials: FKM: V0858-95

Contact our engineers for more information in this area.

Compounds		Hard-ness	Temperature[1)]		Standard
ISO	Parker	[Shore A]	[°C]		
NBR	N0552-90	90±5	-30	100	
HNBR	KA183-85	85±5	-50	150	Norsok M-710
FKM	VG109-90	90±5	-45	205	ISO 23936-2/ Total
FFKM	F0400-80	80±5	-40	270	ISO 23936-2/ Total

[1)] Refers to statical application and the temperatures are rounded

Tab. 7.6 Overview of standard compounds for oil and gas industry

7.15 Sanitary / heating

EPDM, NBR and silicone compounds are the predominant sealing materials used in sanitary and housing technology. If the seals come into contact with drinking water, compounds that have been awarded country-specific drinking water approvals are required. Typical applications for O-Rings and moulded parts are sanitary fittings, thermostat valves, pumps, water meters or water pipe fittings.

In addition to drinking water approvals, seals for pipe fittings must conform to the requirements specified by EN681-1 and W534. These material standards include testing requirements which give conclusive information on long-term behaviour under field application oriented testing conditions.

7.16 Vacuum seals

The following recommendations should be observed when sealing a vacuum:

- Select the correct O-Ring compound
- The surfaces to be sealed and the gland must have a significantly better surface finish than for “normal” seals (see table 7.12)
- The O-Ring should fill the gland (nearly 100 %). This means that larger contact areas are created and the diffusion rate through the elastomer is slowed
- To increase efficiency two seals can be fitted in tandem in separate glands

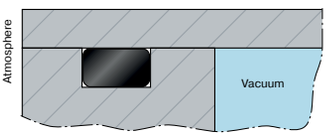

Fig. 7.5 Vacuum O-Ring gland

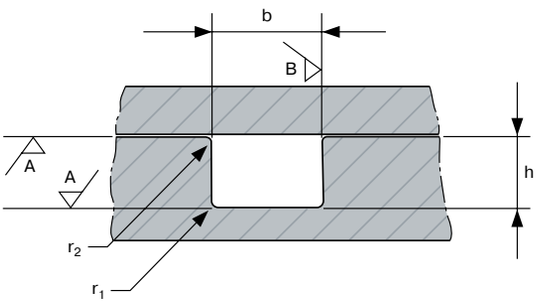

Fig. 7.6 Dimensions of vacuum gland, static application

d_2	$h^{-0.05}$	$b^{\pm 0.05}$	r_1 / r_2
1.78	1.25	2.10	0.20 - 0.40
2.62	1.85	3.10	0.20 - 0.40
3.53	2.50	4.15	0.20 - 0.40
5.33	3.70	6.30	0.20 - 0.40
6.99	4.90	8.20	0.20 - 0.40

Tab. 7.7 Gland dimensions of vacuum gland at approx. 30 % deformation of O-Ring-cross-section d_2

	Surface finish roughness, percentage contact area t_p > 50 %			
	A contact surface		B gland flanks	
	R_a	$R_{max.}$	R_a	$R_{max.}$
Vacuum	0.80	3.20	1.60	6.30
to 10^{-8} Torr	0.40	1.60	1.60	6.30
to 10^{-8} Torr	0.10	0.40	1.60	6.30

Tab. 7.8 Surface finish of vacuum gland

Requirements for the O-Ring compound are:

- Low gas permeation rate
- Good, i.e. low compression set
- Medium compatibility
- Temperature compatibility
- Low weight loss in vacuum

Tel: +45 63 12 83 00 | Email: ps@hymatik.com | www.hymatik.com | Hvidkaervej 27a, DK-5250 Odense SV, Denmark

7 Applications

Compound		Gas permeability coefficient[2] F × 10^{-8}	Weight loss[1]
ISO	Parker	$\left[\frac{cm^3 \times cm}{cm^2 \times s \times bar}\right]$	[%]
IIR	-	7	0.18
CR	C0557-70	7	0.13
NBR	N0674-70	8	1.06
HNBR	N3554-75	8	1.06
FKM	V0747-75	13	0.09
ACM	-	16	-
EPM	-	20	0.39
MFQ	L0677-70	143	0.25
MVQ	S0604-70	238	0.31

[1] Vacuum 10^{-6} Torr, room temperature, test period 14 days

Gas permeability constant F (10^{-8})based on helium at room temperature and loss in a vacuum

Unit F: $(cm^2)/s \times bar$

Tab. 7.9 Elastomer properties

For more detailed information see section 8.11,"Gas leakage rate".

7.17 Fungus-resistant compounds

With the extended use of elastomers it has become necessary to test compound components for fungus infestation and dissemination. Micro-organisms are not only found in tropical climates, but also in hydraulic systems, for instance. Compounds are tested according to MIL-STD-810 B method 508. The following table shows compounds which have passed the test (further compounds available on request).

NBR	EPDM	VMQ	FKM	CR	FVMQ
• N0674-70 • N0741-75 • N0552-90 • N0300-90[1]	• E0540-80	• S0604-70	• V0747-75V0709-90	• C0557-70	• L0677-70

[1] Parbak® compound

Tab. 7.10 Fungus-resistant compounds tested according to MIL-STD-810 B, Method 508

Tel: +45 63 12 83 00 | Email: ps@hymatik.com | www.hymatik.com | Hvidkaervej 27a, DK-5250 Odense SV, Denmark

8 Sealing terminology

8.1 General selection criteria

The number and variety of criteria which affect a sealing element are often underestimated by users. The chemical properties of a medium and the physical working conditions are essential criteria for selecting an elastomer and designing a gland.

The Media Compatibility Table (see Appendix) provides information on the chemical influence of a medium on all commonly used elastomers. The table indicates the optimally suited compound for various media.

This section describes the key vocabulary used in sealing technology. Knowledge of this general terminology helps to answer detailed questions in less time.

8.2 Abrasion

ISO 4649 abrasion tests (using a cylinder covered with emery cloth) inadequately reflect conditions in field use. Real mechanical wear is very complex, so the comparative data obtained according to ISO 4649 are hardly conclusive in many cases. Wear behaviour should therefore be tested in the relevant application.

HNBR, NBR, EPDM, CR and FKM have good abrasion resistance properties. TPU (polyutherane) is very abrasion-resistant. Silicone and fluorosilicone have poor abrasion resistance.

8.3 Ageing

Ageing is reflected in the deterioration loss of physical properties and depends on the type of rubber molecules chain. The long molecular chains consist of many smaller connected molecules. These combinations and other parts of the molecule chains can be vulnerable to chemical reactions.

Three types of such reactions are related to ageing:

1. **Splitting** – the molecule links are broken and the main chain is reduced to short sections. Ozone, UV light and radioactivity cause splitting.
2. **Cross-linking** – an oxidation process which causes new cross-links to form. This process leads to the formation of new molecule chains. Heat and oxygen promote these changes.
3. **Modification of molecule chain side groups through chemical reaction** – a contact medium attacks the elastomer and causes a change in its molecular structure. All mechanisms which lead to the degradation of an elastomer's properties are activated by the environment. Seals are always exposed to ageing influences, whether in storage under working conditions. Individual elastomers have a different resistance to ageing.

8.4 Ageing tests

Rubber samples are artificially aged in heat-treating furnaces under aggravated conditions to allow conclusions on natural ageing to be drawn within a short time span. Tests are made in compliance with DIN ISO 815-1 and subject to temperature and time according to the elastomer type and working conditions, e.g.

- NBR 70 hours or 7 days at 70 or 100 °C
- EPDM 70 hours or 7 days at 100 or 150 °C
- FKM 70 hours or 7 days at 200 or 250 °C
- VMQ 70 hours or 7 days at 200 or 250 °C

The following physical properties are measured before and after ageing: hardness, tensile strength, ultimate elongation and tensile stress (modulus). Minimum change indicates a better resistance to ageing.

8.5 Coefficient of thermal expansion

Depending on the mixture formulation, elastomers show a coefficient of thermal expansion 10 times greater than that of steel. It is therefore important in borderline cases to know how much a seal shrinks in cold conditions or expands at high temperatures and how this affects the elastic force on the seal face.

At low temperatures a reduced elastic force on the seal face can lead to leakage when additional shrinkage occurs. These changes can be considered in groove design. In dynamic applications, friction can increase due to thermal expansion in operating temperatures (ensure heat removal).

Whenever high-performance elastomers such as FFKM are used at temperatures above 200 °C, special attention must be paid to thermal expansion when designing the groove. A temperature rise to 300 °C may result in volumetric expansion of up to 30 %. If the seal is unable to perform this thermal expansion high levels of stress occur that may damage the seal and mating components.

Tel: +45 63 12 83 00 | Email: ps@hymatik.com | www.hymatik.com | Hvidkaervej 27a, DK-5250 Odense SV, Denmark

8 Sealing terminology

Material	Shrinkage 24 to 54 °C [mm/dm]	Expansion 24 to 190 °C [mm/dm]	Coefficient of expansion $\frac{mm}{dm \times °C} \times 10^{-3}$
NBR	0.90	1.87	11.20
CR	1.10	2.28	13.70
FKM	1.30	2.70	16.20
EPDM	1.30	2.66	16.00
VMQ	1.60	3.30	20.00
FFKM	2.40	4.98	30.00
Alu 2017	0.19	0.39	2.30
SSType 302	0.14	0.29	1.70
Cast iron	0.10	0.20	1.20

Tab. 8.1 Linear thermal coefficient of expansion for elastomers and metals

8.6 Compression set

Compression set describes the lasting deformation of a standard sample or finished part that has been deformed under certain conditions.

As a general rule, the better the compression set, i.e. the lower the permanent deformation (in per cent related to the deformation of the sample, the button, the cross-section), the higher the evaluation of quality.

Compression set depends on the elastomer base, mixture composition, manufacturing conditions, testing temperature and time, deformation of the specimen, thickness of the specimen and the test medium.

Tests are performed according to DIN ISO 815 or ASTM D 395 Method B following 25 % compression with storage in a heat-treating furnace in air.

An additional test in the medium (oil, steam, etc.) gives values for swelling, shrinkage etc.

The low-temperature flexibility and the elastic condition at freezing temperatures can also be evaluated by this test. To obtain a conclusive curve, the samples are compressed according to the above test method, progressively frozen and measured at the respective test temperatures after relieving the compression.

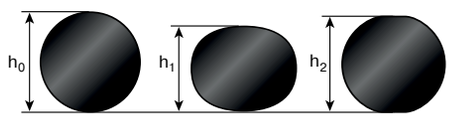

Fig. 8.1

$$\text{Compression set} = \frac{h_0 - h_2}{h_0 - h_1} \times 100\ (\%)$$

h_0 = O-Ring cross-section or original height of the specimen
h_1 = height of deformed specimen
h_2 = height of relieved specimen (after a defined time delay)

The following figures show the dependency of the O-ring cross-section test values and percentage-wise compression.

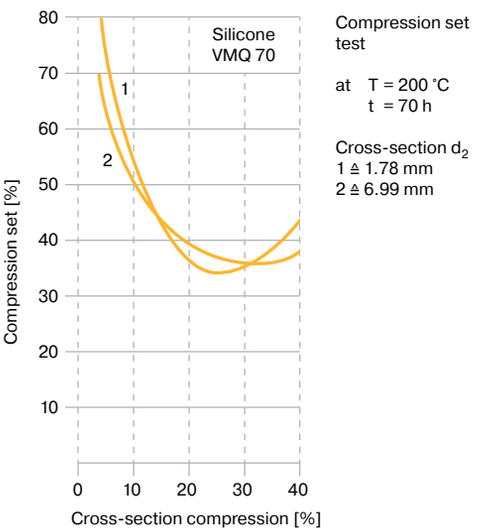

Fig. 8.2

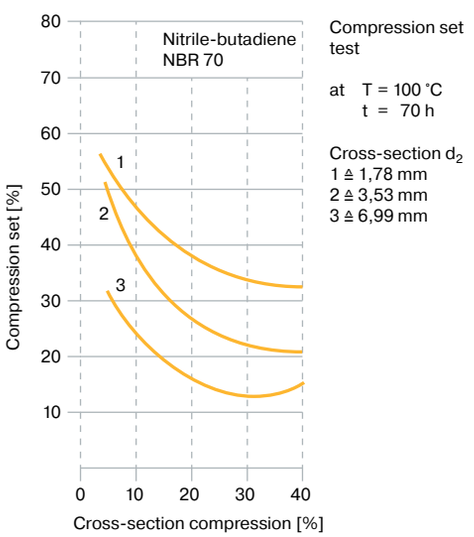

Fig. 8.3

The results obtained on the tested elastomers have shown that the compression set of NBR compounds is more dependent on the cross-section (sample thickness) than that of silicone materials, for example. The trend of the curves is readily visible as well, showing that the most favourable permanent deformation is in the range of 25 to 30 % compression.

Tel: +45 63 12 83 00 | Email: ps@hymatik.com | www.hymatik.com | Hvidkaervej 27a, DK-5250 Odense SV, Denmark

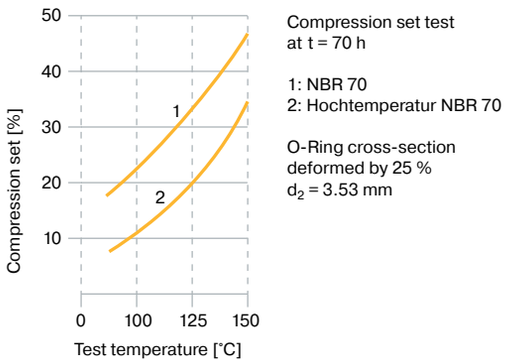

Fig. 8.4

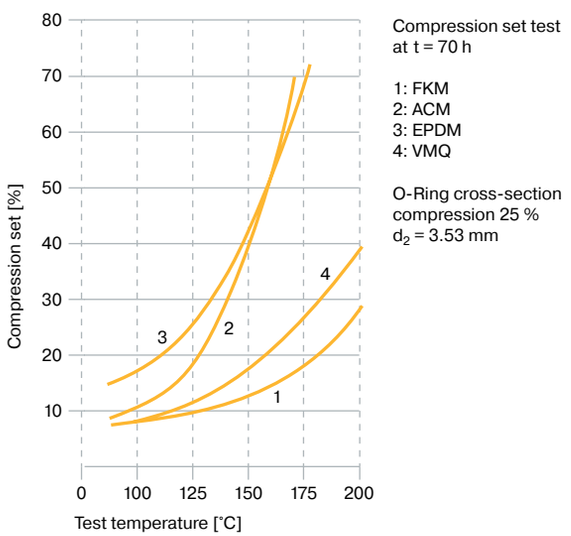

Fig. 8.5

The influence of temperature on the test results will largely depend on the base elastomer and its ability to withstand high temperatures. Ageing and the degradation of elastic rubber properties set in at higher test temperatures (and prolonged test periods).

Fig. 8.4 shows the increased temperature resistance of "high-temperature NBR 70" as improved (lower) compression set results. Fig. 8.5 shows a comparison of the effects of temperature on other elastomers. FKM and VMQ show significantly lower compression set results, and the curve clearly indicates that they can resist temperatures in excess of 200 °C.

By contrast, when looking at hot air as the contact medium, the steep rise of the EPDM curve is notable. EPDM is resistant against hot air up to +150 °C – in the actual application medium, steam and hot water, compression set, for instance in steam, would be measured with less permanent deformation.

Conversely, for FKM and VQM a drastic deterioration of the values applies in steam as a test medium.

The diagrams show compression set tests carried out over a period of 70 hours. Shorter tests, e.g. for 22 hours, give better results; longer tests, e.g. for 168 hours, give worse results. Results of compression set tests can be compared only when all factors affecting the test results are identical, e.g. test method, specimen, geometry, deformation, testing time and temperature, and the contact medium.

To some extent the results of measurements allow conclusions to be drawn concerning the seal's behaviour in the particular application. Yet without knowledge of the exact application conditions it is impossible to evaluate the effects of compression set in the application. For example, seals with 90 % compression set may retain their sealing performance, whereas under certain operating conditions a compression set of merely 60 % may lead to seal failure.

8.7 Tightness, technical tightness

The tightness of an O-ring seal can be described as follows:

- Static seal, between non-moving machine parts: no loss of liquid media; loss of gaseous media due to diffusion is to be expected.
- Dynamic seal, between moving machine parts: in the case of liquid media a film of the medium may be present on the mating surface (due to the perviousness of the seal) and lead to leakage losses after a prolonged period of time; in the case of gaseous media there may be losses at the mating surface.

8.8 Elastomer Compatibility Index (ECI)

The effect of a medium on an elastomer may range from shrinkage to slight swelling through to complete disintegration. Any such volume change leads to changes in mechanical properties such as hardness, tensile strength and ultimate elongation which can lead to complete seal failure. It should be noted that these impacts may accelerate at higher temperatures.

With mineral oils these processes are attributed to two contrasting reactions: On the one hand, oil diffuses into the rubber causing swelling to a compound-specific limit. This results in an increase in volume. On the other hand, elastomer additives such as plasticisers, antioxidants etc. can be dissolved or extracted from the compound, resulting in shrinkage. Both processes can be concurrent.

The effect does not only depend on the composition of the elastomer but also on the hydraulic fluid. An NBR elastomer contains between 15 % and 50 % acrylonitrile (ACN). The higher the ACN content, the better the compatibility with oil.

Tel: +45 63 12 83 00 | Email: ps@hymatik.com | www.hymatik.com | Hvidkaervej 27a, DK-5250 Odense SV, Denmark

8 Sealing terminology

In the medium, aromatic combinations (e.g. benzene) cause a greater swelling of the elastomer than saturated aliphatic ones, such as those found in paraffin-based oil (e.g. methane). In the same way, a high content of aromatics (e.g. as in paraffin based oils) leads to a low tendency to swell (also with low ACN content). Conversely, naphthene-based oils cause greater swelling, e.g. with NBR. A higher ACN content is necessary to resist swelling resulting from naphthene-based oils.

In order to select the correct compound without carrying out extensive laboratory tests Parker has developed a simple reference test called ECI (Elastomer Compatibility Index). Extensive tests have proved that there is a linear relationship between the ECI and the volume change of elastomers based on NBR, ACM, FKM and CR rubbers. By using the ECI, the volume change of the above elastomers can be predicted in a mineral oil. The ECI for an oil is initially determined in the laboratory (table 8.2). The ECI values can be plotted on a compound specific graph (figures 8.7 and 8.8) and the expected volume change can be read directly from the vertical axis. In this way a decision can be taken regarding elastomer compatibility with oils. This procedure has been adopted in the international ISO 6072 standard with Parker participation.

Type of oil	Elastomer Compatibility Index (ECI)
IRM Oil 901 (ASTM-oil 1)	2.2 - 3.2
BP Energol HLP 100	3.7 - 4.7
Esso Nuto H-54 (HLP 36)	5.9 - 6.9
Houghton HD 20W/20	6.9 - 7.9
Esso Nuto H-44 (HLP 16)	7.1 - 8.1
DEA Rando Oil HDC (HLP 36)	7.7 - 8.7
Fina Hydran 31	8.5 - 9.5
Shell Tellus 923 (HLP 16)	9.2 - 10.2
IRM Oil 902 (ASTM-oil 2)	9.4 - 10.4
Esso-Trafo Oil 37	12.5 - 13.5
Agip F.1 Rotra ATF	12.6 - 13.6
Mobil Vac HLP 16	14.0 - 15.0
Shell Tellus 15	14.7 - 15.7
Essovis J 43	15.0 - 16.0
Shell Oil 4001	16.3 - 17.3
Texaco Rando Oil AAA	16.5 - 17.5
BP Energol HP 20	19.0 - 20.0
IRM Oil 903 (ASTM-oil 3)	23.0 - 24.0
Shell Tellus 11	32.9 - 33.9
Shell Oil JYO	34.5 - 35.5

Tab. 8.2 ECI for various oils

On request we are pleased to test any oil to determine its ECI. However, anybody can test for the ECI as follows: the weight change of a test elastomer, e.g. NBR 1 to ISO 6072, is measured after immersion in the respective oil for 168 hours at +100 °C. The ECI then is simply read from fig. 8.6 which plots the weight change.

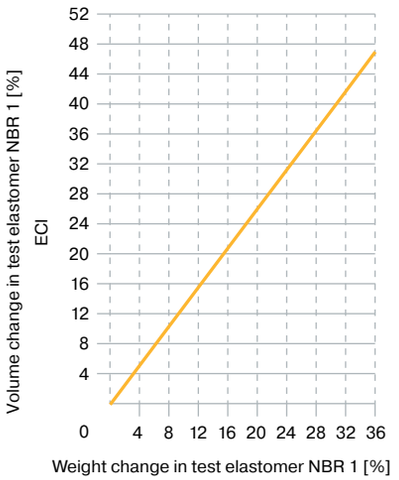

Fig. 8.6

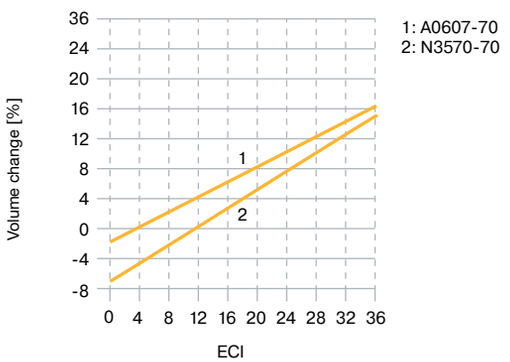

Fig. 8.7 Swelling characteristics of Parker compounds

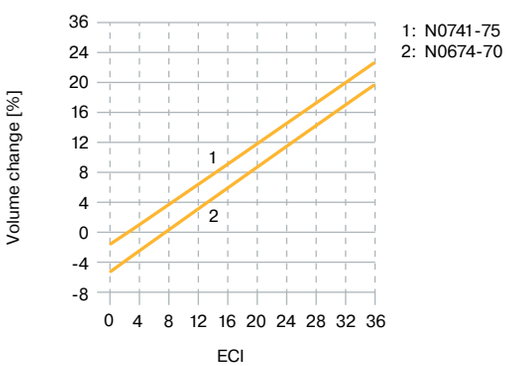

Fig. 8.8 Swelling characteristics of Parker compounds

Tel: +45 63 12 83 00 | Email: ps@hymatik.com | www.hymatik.com | Hvidkaervej 27a, DK-5250 Odense SV, Denmark

8.9 Electrical properties of elastomers

Elastomers may be good insulators, semiconductors or conductors, depending on the way they are used. The type of rubber and filler (electrically conductive carbon black) can be selected to meet electrical requirements.

Criteria:

1. Electrically insulating: > 109 Ohm cm; SBR, IIR, EPM, EPDM, VMQ, FKM
2. Anti-static, as semiconductor: 105 to 109 Ohm cm; NBR, CR
3. Electrically conductive: < 105 Ohm cm; special compounds

In field use electrical conductivity is required for seals in applications where electrostatic charging must be precluded, such as fuel tank seals, drive belts, applications in medical technology, etc. When special compounds are required, care should be taken to ensure that certain parts of the compound formulation are not dissolved or extracted by the medium being sealed, thereby changing the electrical properties.

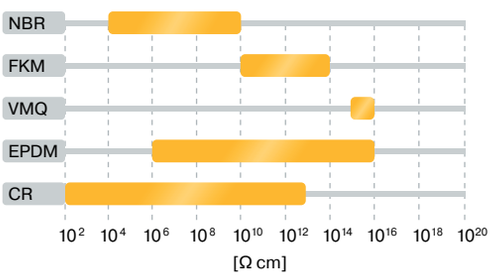

Fig. 8.9 Specific electrical resistance

8.10 Corrosion

Sometimes metal surfaces in contact with elastomers show signs of corrosion. This is a chemical attack upon a metal surface. The various types of corrosion have definite characteristics and can be described as general corrosion, pitting, gap corrosion and intercrystalline corrosion.

The presence of corrosion where metals and elastomers are in contact may have different causes:

- Free sulphur in standard rubber qualities
- Formation of hydrochloric acid where an elastomer contains chlorine
- Electrochemical processes

8.10.1 Corrosion caused by free sulphur

Some rubber compounds are vulcanised using elemental sulphur in combination with vulcanisation accelerators. The largest part of the sulphur used forms stable cross-linking bridges between the rubber molecules. This sulphur remains chemically combined and cannot be extracted. However, there is always a small residual amount of free or uncombined sulphur.

When in contact with any of a number of metals and alloys (e.g. silver, copper, lead) the free sulphur tends to form metal sulphides which cause discolouring and corrosion damage. Furthermore, a reaction between metal and sulphur can lead to malfunctions, for instance, when seals for moving machine parts tend to stick once machine operation is resumed after prolonged downtime. To avoid such corrosion or malfunction, the use of a sulphur-free compound is recommended.

8.10.2 Corrosion caused by the formation of hydrochloric acid

Compounds that contain chlorine, such as CR, ECO, CO and to a lesser extent ACM, tend to release hydrochloric acid and cause corrosion when used in high temperatures or if otherwise influenced by their environment. Appropriately composed rubber mixtures contain suitable stabilizers (e.g. metal oxides) which inhibit hydrochloric acid. Hydrochloric acid also can be formed around compounds which are free from chlorine (e.g. SBR and NR) if they contain organic chlorine combinations such as chlorinated paraffin (a flame retardant).

8.10.3 Electrochemical corrosion

The formation of small galvanic cells (local elements) is the main mechanism responsible for the corrosion of metals. A galvanic cell is formed when two different noble metals touch. A conductive liquid, i.e. an electrolyte solution, is the prerequisite for these electrochemical processes.

Alloys made up from different metal phases or crystals can be damaged by intercrystalline corrosion when small local cells are formed.

If electrochemical corrosion primarily occurs in the vicinity of rubber components (such as seals) this does not necessarily mean that the rubber compound is the cause.

It is difficult to say to what extent there is a correlation between electrochemical corrosion and rubber as the mating component. It is assumed that condensation accumulates between the rubber and the metal which together with other deposits causes electrochemical corrosion. The type of metal alloy, surface roughness, metal structure, temperature and humidity all play a major part in this.

8.11 Gas leakage rate

All elastomers allow pressurised gas to penetrate, permeate and escape from the material on the non-pressurised side. The permeability rate depends on the type of gas, base elastomer, temperature and pressure. Permeability is important, for in-

Tel: +45 63 12 83 00 | Email: ps@hymatik.com | www.hymatik.com | Hvidkaervej 27a, DK-5250 Odense SV, Denmark

8 Sealing terminology

stance, in vacuum and gas technology (see section 6.12 "Environmentally friendly hydraulic fluids").

Calculation of leakage rate
The rate of gas leakage through an O-ring can be calculated as an approximation when the elastomer permeation rate is known for the working temperature. The following tables give various gases with their gas permeability coefficients.

The following formula provides a useful approximation:
$\mathbf{L \triangleq 0.4 \times F \times d_1 \times P \times Q\,(1 - S)^2}$
where:

L	≙	approximate leakage rate (cm^3/sec.)
F	≙	permeability coefficient (from table)
d_1	≙	O-Ring inner diameter (mm)
P	≙	differential pressure (bar)
Q	≙	correction factor – depending on compression and surface lubrication (fig 8.10)
S	≙	compression of O-Ring cross-section expressed as a decimal (e.g. 20 % compression, i.e. S = 0.20)

The result of this formula is only a rough approximation as gas permeability varies between different elastomers with the same polymer and some assumptions are only approximations as well.

These assumptions are:

1. The cross-section of the deformed O-ring is rectangular.
2. The area of the compressed O-ring is the same as that of the non-compressed O-ring.
3. The permeability rate of a gas is proportional to the differential pressure.

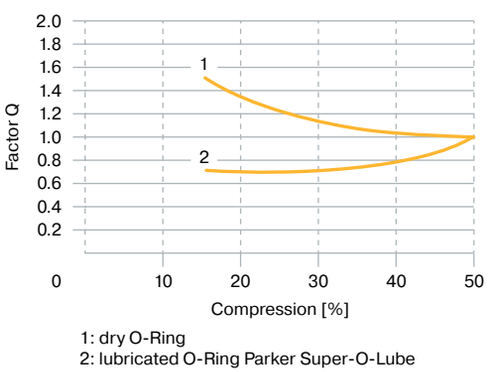

Fig. 8.10 Influence of O-Ring compression on leakage rate, with and without lubrication

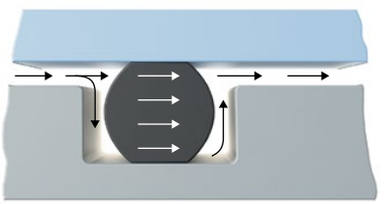

Leakage rate as a sum of
a) Diffusion through the O-Ring
b) Gas migration through surface irregularities in the sealing areas not completely filled by the sealing material

Fig. 8.11

Medium: Hydrogen			
Polymer base	**Parker compound**	**Temperature [°C]**	**Gas permeability coefficient[1)]**
SBR	-	25	32
SBR	-	50	76
IIR	-	35	16
IIR	-	125	280
EPDM	-	40	45
EPDM	-	90	350
FKM	-	90	160
CR	-	40	180
NBR	-	40	12
NBR	-	80	88
ACM	-	40	50
ACM	-	90	170
ACM	-	150	900
TPU	-	40	5
SBR	-	40	47
SBR	-	120	540
VMQ	-	40	1000
VMQ	-	90	2000
VMQ	-	150	6000

[1)] Gas permeability coefficient $F \times 10^{-8}((cm \times cm^3)/cm^2 \times s \times bar)$
These values are the average of various results and may vary depending on the compound.

Tab. 8.3

Tel: +45 63 12 83 00 | Email: ps@hymatik.com | www.hymatik.com | Hvidkaervej 27a, DK-5250 Odense SV, Denmark

8 Sealing terminology

Medium: Nitrogen		
Polymer base	Temperature [°C]	Gas permeability coefficient[1)]
SBR	25	4
SBR	50	14
IIR	25	0.25
IIR	50	1.25
FKM	30	0.25
FKM	50	1
TPU	23	0.17
TPU	80	3.8
FVMQ	25	40
CR	30	1
CR	85	17
NBR	20	0.5
NBR	80	14
VMQ	30	150
VMQ	50	240

[1)] Gas permeability coefficient $F \times 10^{-8}((cm \times cm^3)/cm^2 \times s \times bar)$

These values are the average of various results and may vary depending on the compound.

Tab. 8.4

Medium: Helium			
Polymer base	Parker compound	Temperature [°C]	Gas permeability coefficient[1)]
SBR	-	25	12
IIR	-	25	7
IIR	-	150	240
EPM	-	25	20
EPM	-	80	61
EPM	-	150	320
FKM	-	25	13
FKM	-	80	131
FKM	-	150	490
FVMQ	-	25	143
FVMQ	-	80	460
FVMQ	-	150	970
CR	-	25	7
CR	-	80	60
CR	-	150	187
NBR	-	25	8
NBR	-	80	66
ACM	-	25	16
ACM	-	80	110
ACM	-	150	310

Medium: Helium			
Polymer base	Parker compound	Temperature [°C]	Gas permeability coefficient[1)]
TPU	-	25	4
TPU	-	80	34
SBR	-	25	17
VMQ	-	25	238
VMQ	-	80	560
VMQ	-	150	1250

[1)] Gas permeability coefficient $F \times 10^{-8}((cm \times cm^3)/cm^2 \times s \times bar)$

These values are the average of various results and may vary depending on the compound.

Tab. 8.5

Medium: Carbon dioxide		
Polymer base	Temperature [°C]	Gas permeability coefficient[1)]
SBR	25	70
SBR	30	90
SBR	50	200
FVMQ	25	517
CR	25	17
CR	50	50
NBR	20	6
TPU	20	10
VMQ	20	1250

[1)] Gas permeability coefficient $F \times 10^{-8}((cm \times cm^3)/cm^2 \times s \times bar)$

These values are the average of various results and may vary depending on the compound.

Tab. 8.6

8.12 Hardness

Hardness is described as the resistance of a body against intrusion of a harder body of a certain shape at a defined compressive force within a certain period of time. Hardness is measured in units of Shore or IRHD (International Rubber Hardness Degrees). Comparable values were determined on standard samples and are stated in degrees of Shore A. The hardness of finished components is usually measured in IRHD. Hardness values obtained on the finished part typically differ from those of standard samples as part thickness, curved surfaces or values measured around the edges are not comparable and the measurement techniques vary.

Hardness tests are performed according to
- Shore A hardness, DIN ISO 48
- Ball indentation hardness, IRHD, DIN ISO 48

Tel: +45 63 12 83 00 | Email: ps@hymatik.com | www.hymatik.com | Hvidkaervej 27a, DK-5250 Odense SV, Denmark

8 Sealing terminology

Softer O-ring material settles more easily into the microfine imperfections in the surface to be sealed than harder material. This is advantageous where system pressure is low; normally high system pressure would cause this effect with a harder O-ring. For this reason, we recommend O-rings made from softer compounds for use in low pressure applications, as they have a better sealing effect than hard ones. In sensitive applications where the force required to deform the O-ring is critical, please consult figures 8.26 to 8.30. The force required to deform an O-ring of a given hardness by a given percentage can be found in the tables. For instance, this applies to large O-rings which may require high assembly forces or when using plastic design elements which have a lower mechanical strength than metals. In these cases the resilience of the O-rings may cause structural distortions and deformation of the design elements.

In dynamic applications the hardness of the O-ring is even more important. Generally it is true to say that for the same gland depth, a harder O-ring shows higher breakaway and dynamic friction. Conversely, the harder compound has a lower coefficient of friction. Harder compounds have a higher resistance to gap extrusion. In high pressure systems harder O-rings are used as flange seals; O-rings with a Parbak® back-up ring are used in piston or rod seals to prevent gap extrusion.

8.13 Gough-Joule effect

If a freely suspended rubber strip is loaded with a weight and subsequently heated, the strip will contract and lift the load. Conversely, an unloaded strip when heated expands to the coefficient of expansion for that rubber. This phenomenon of contraction is referred to as Gough-Joule effect and occurs only when heating a previously stretched rubber object.

Example:
An O-ring as a radial shaft seal. When using O-rings with an inner diameter smaller than the shaft diameter the O-ring is stressed. The O-ring heats up due to friction and contracts. This leads to even higher friction and a rise in temperature. Failure of the O-ring is characterised by a hard and brittle O-ring surface.

In practical terms, this means that larger O-rings with controllable compression and an inner diameter exceeding the shaft diameter by 1 to 3 % should be used, with the outer part of the gland compressing the O-ring.

8.14 Storage, storage time and cleaning of elastomers

Properly stored rubber products can retain their properties for many years without any appreciable changes. Unfavourable storage conditions, however, will quickly make seals unusable.

Storage conditions

- Standard conditions for storage, cleaning, and maintenance of rubber products have been defined by DIN 7716 and ISO 2230. The following is an extract listing the main conditions to be met by storage facilities:
- Room temperature approximately +15 °C, but not to exceed +25 °C
- Low temperatures down to -10 °C max., except for chloroprene rubbers (CR), which should not be stored below +12 °C
- Relative humidity below 65 %
- Dust-free, moderately ventilated atmosphere
- Shielded radiators, located at a minimum distance of 1 metre from the stored products
- No direct exposure to sunlight
- No sources of light with high UV content. UV rays generate ozone, which damages elastomer products
- For safety reasons (fire hazard), any operation of electrical devices, motors and equipment prone to cause sparks is prohibited in storage areas
- Products should be stored in sealed (welded) polyethylene bags, which are impermeable to light, and packed in boxes
- Elastomer products should be stored in a manner that prevents their deformation
- When storing devices with rubber components, only elastomer-compatible preservatives should be used

Storage time

A crucial element determining the storage period of elastomers is the time of vulcanisation. Parker marks packing bags with the manufacturing date. “1Q23”, for example, means parts produced in the first quarter of 2023.

As a general rule, all elastomer products should be checked to confirm that they are in proper condition prior to installation. Negative changes caused by inappropriate storage can usually be detected by visual inspections. These involve the following key characteristics: contamination, cracking, hardening, softening, stickiness and discolouration.

For critical or safety-relevant applications, it is recommended to follow DIN 9088, Aerospace, which limits the recommended storage period to 40 quarters.

This period may be extended after inspecting the parts for the above-mentioned characteristics. The laboratories of the Parker seal manufacturing plants offer these inspections as a service to users.

The storage period ends when the components are installed.

Cleaning

Rubber products should be cleaned using a clean cloth and tepid water. Petrol, benzene, turpentine, etc. are not suitable. Sharp-edged or pointed objects, such as wire brushes, grinding paper, etc. must not be used on the products. Drying rubber products near radiators/heaters is not recommended.

Tel: +45 63 12 83 00 | Email: ps@hymatik.com | www.hymatik.com | Hvidkaervej 27a, DK-5250 Odense SV, Denmark

8.15 Cross-section reduction caused by elongation

When an O-Ring is stretched, its cross-section becomes oval. In critical sealing applications this change in cross-section must be noted, as it reduces the deformation of the O-Ring diameter. The correction in groove depth t or h is taken into account in the design phase.

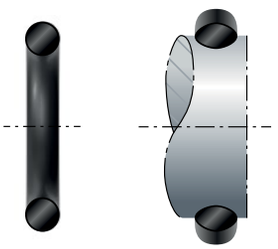

Fig. 8.12 Left: unstretched O-Ring, right: stretched O-Ring

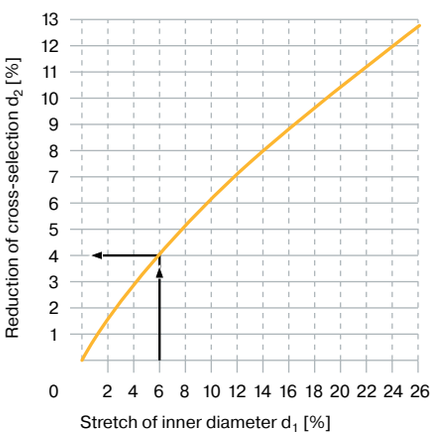

Fig. 8.13 Decrease of cross-section diameter d_2 due to elongation of inner diameter d_1

8.16 Surface finish of seal faces

Among other things, the quality of the finish of the seal's mating surface and the bottom of the groove have a crucial effect on the service life of a sealing element. With respect to roughness values for sealing surfaces a distinction is made between static and dynamic surfaces. The section "Forms of installation" gives detailed information about the different applications and the recommended maximum surface roughness. Perfect surface finish cannot be achieved. A surface can be plotted on a range of variations, from dimensional deviations (DIN level 1) to surface undulation (level 2) and different degrees of roughness (levels 2 to 5), as illustrated by figure 8.14. These levels can be superimposed.

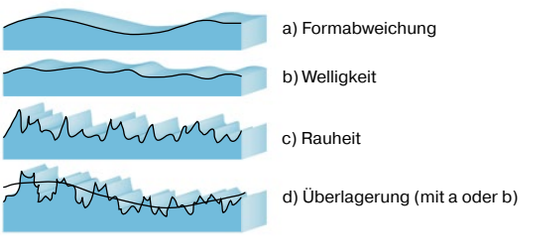

a) Dimensional deviations
b) Surface undulations
c) Roughness
d) Superimposition (with a or b)
Fig. 8.14 Surface finish structure

Surface finish often is quantified in terms of R_t and R_a (see fig. 8.15). R_t is the vertical distance between the highest and the lowest points in a roughness profile over a trace length l_m. R_t is increasingly being replaced by R_{max}, the maximum depth of roughness. R_{max} is the greatest single roughness found in 5 consecutive individual trace lengths l_e. In figure 8.15, roughness depth $Z_4 = R_{max}$. In this measurement, R_{max} might not be the highest roughness peak as is always the case for R_t.

The middle roughness value R_a is the arithmetic mean of all absolute roughness values within the trace length l_m. R_z, the average roughness value of 5 consecutive trace lengths l_e is often preferred to R_a.

If R_a is known, R_z can be taken from fig. 8.16 and vice versa. Fig. 8.16 is taken from **DIN 4768-1**, attachment 1. Should R_z reach the upper limit of the graph it can be assumed that the specified R_a values will not be exceeded. The lower limits would be used if the R_z value is prescribed.

Finally, the depth of roughness R_p is also of interest. This is the vertical distance between the highest point and the centre line of a roughness profile.

Tel: +45 63 12 83 00 | Email: ps@hymatik.com | www.hymatik.com | Hvidkaervej 27a, DK-5250 Odense SV, Denmark

8 Sealing terminology

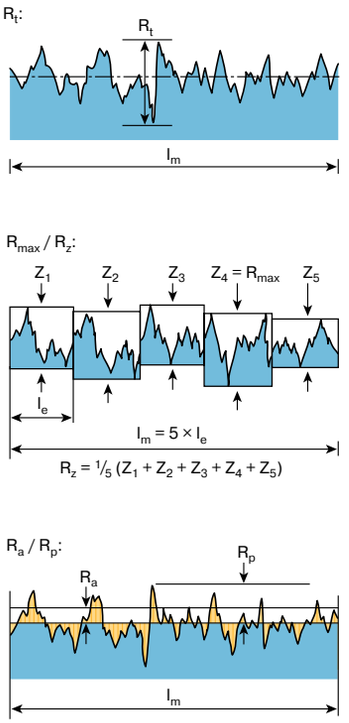

R_t = Vertical distance between highest and lowest points
R_p = Depht of roughness
R_a = Middle roughness value
Fig. 8.15 Roughness terminology

	R_t [µm]	R_p [µm]	R_a [µm]	t_p [%] 0.25 R_t	0.50 R_t	0.75 R_t
	1	0.5	0.5	50	50	50
	1	0.5	0.25	25	50	75
	1	0.5	0.25	25	50	75
	1	0.75	0.28	12.5	25	37.5
	1	0.25	0.28	62.5	75	87.5
	1	0.785	0.188	3.5	14	35
	1	0.215	0.188	65	86	96.5
	1	0.5	0.39	43	50	57

Tab. 8.7 Ideal profile sections for surface assessment

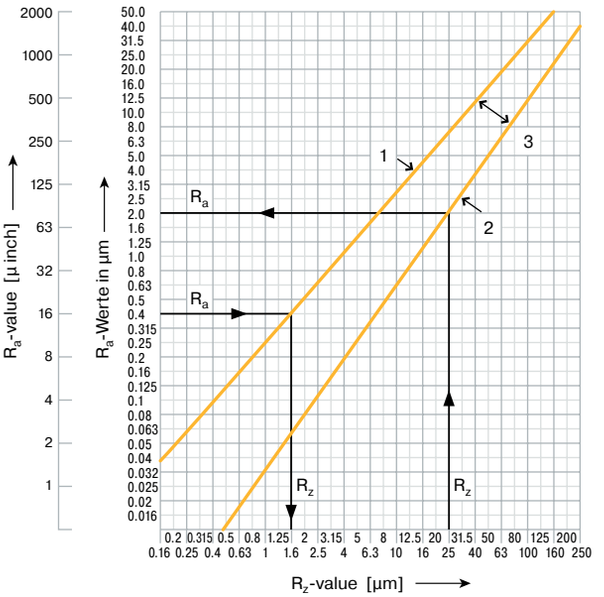

1: Upper limit for R_z when transposing from R_a to R_z
2: Upper limit for R_a when transposing from R_z to R_a
3: Deviation
Fig. 8.16 Relationship between R_a and R_z

Values for R_t are of very little assistance in reaching a conclusion regarding the suitability of a surface roughness from the sealing point of view. Table 8.7 shows that for a similar R_t all levels of roughness can be produced. R_a values alone are also unsuitable for comparison because profiles 6 and 7 have the same R_a value. Value R_p and/or load area t_p must also be considered.

A static sealing surface $R_t \leq 6.3$ µm (old: ▽▽▽ roughness DIN 3141; new: √R_t 6.3 roughness DIN ISO 1302) is rougher than a dynamic surface. Seal manufacturers recommend a roughness $R_t \leq 2.5$ µm for a dynamic sealing surface (R_a = 0.25 to 0.5 µm) (old: ▽▽▽ roughness DIN 3141; new: √R_t 2.5 roughness DIN ISO 1302) when the load area is over 50 %, or when the surface finish roughness R_p is under 50 %. These limitations often are overlooked, nevertheless the connection between surface finish and load area is very important because an "open" profile can have sharp edges (e.g. profiles 2 to 6 in table 8.7). These open profiles are a product of cutting processes such as turning or grinding. A much larger load area is produced by cold forming processes such as rolling, drawing or sinking.

Tel: +45 63 12 83 00 | Email: ps@hymatik.com | www.hymatik.com | Hvidkaervej 27a, DK-5250 Odense SV, Denmark

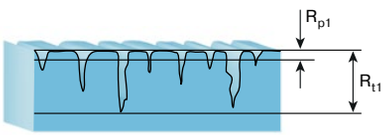

Surfaces produced by roller burnishing (cold formed surface)

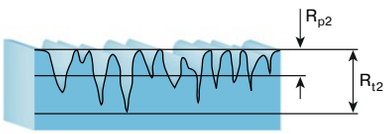

Surfaces produced by normal machining
Fig. 8.17

It can be clearly seen from fig. 8.17 that surfaces produced by roller burnishing have no sharp peaks which can cause damage to a seal. Furthermore, the valleys form potential lubrication reservoirs which improve the dynamic behaviour of a seal.

In practice, it must be assured that all these roughness values, which are measured over a very short length, are also valid for the whole surface. Furthermore – at least for surface comparisons – the reference lengths must be stated. Otherwise the profile heights will differ.

8.17 Friction and wear

O-rings contact the sealing surfaces due to their resilience and diametric compression, plus the superimposed system pressure. When these surfaces are moved relative to each other the resulting friction has two consequences: one of them is wear and the other is a reduction of the cylinder's turning force, which is diminished by the force needed to cope with friction.

8.17.1 Friction

In dynamic applications a distinction must be made between static friction, which has to be overcome when motion starts, and dynamic friction when motion is in progress. The problem of static friction is particularly significant in the case of oscillating motion, for instance in cylinders.

The dynamic friction of seals depends on a multitude of factors. It is practically impossible to precisely quantify these factors, especially since only very few of them can be exactly reproduced. This is also why it is difficult to make predictions about the friction to be expected for individual products. The most important factors are:

Related to the seal:
- Geometry of the seal including manufacturing tolerance and thus preloading
- Hardness and texture of the material
- Coefficient of friction of the dry and lubricated compound
- Swell and temperature characteristics

Related to the hydraulic fluid:
- Formation of a lubricating film and lubricant distribution
- Level and temperature-dependency of viscosity

Related to the working conditions:
- Working pressure
- Rubbing velocity, type of material and surface finish of metal sealing surfaces
- Machining tolerances
- Axial loads and guides on pistons

Most of these factors do not have singular but cumulative effects by overlapping with other influences.

When a seal face moves the seal goes through two friction phases. When motion starts from rest, a condition of boundary friction typically exists (primarily solid or dry friction with few lubricated fields μ appr. = 0.3). This is followed by a wide range of mixed friction where the coefficient of friction can drop as low as 0.06 to 0.08 according to the proportion of lubrication / nonlubricated areas (fig. 8.18). The area of purely hydrodynamic friction can rarely be achieved with seals. This is also where leakage due to the consistent lubrication film heavily increases.

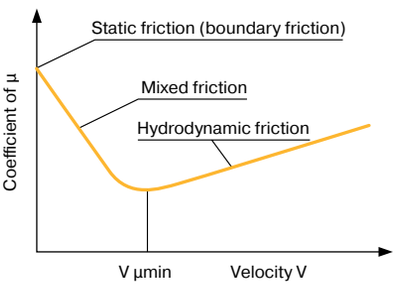

Fig. 8.18 Stribeck curve

Hydraulic seals
The compound influences friction via its sliding properties, which may vary greatly, and via its hardness, which affects the deformation under pressure. With increasing pressure friction may increase proportionally to the square of the mean specific compression.

The working pressure determines the size of the gap under the seal and thus the thickness of the lubricating film. Therefore, the effects differ depending on the seal's geometry. With O-rings friction increases in proportion to the rising pressure

Tel: +45 63 12 83 00 | Email: ps@hymatik.com | www.hymatik.com | Hvidkaervej 27a, DK-5250 Odense SV, Denmark

8 Sealing terminology

whereas lip seals show a steeper rise due to the radial effect of the pressure. With this type of seal even details in the geometry can make a significant difference in friction.

However, as friction only partially depends on the level of working pressure it is important to minimise friction particularly in low-pressure conditions.

This can only be achieved to a limited extent, though, as a decrease in contact force automatically results in higher leakage. While this dependency may be influenced by the geometries of the seals within certain limits, a choice between low friction and high tightness is often inevitable.

In addition, there may be insufficient geometric stability, which depends on the swelling behaviour in the pressure fluid.

Sufficient lubrication, which is obviously important in this type of friction issue, seems to be assured when using mineral oil as the hydraulic fluid. However, not only the viscosity of the medium but also the geometry of the seal again plays a role in this as it influences the thickness of the lubricating film, among other things. In the worst case, the seal can run dry because the lubricating film was wiped off. Although the seal will be very tight in this case, it will also wear faster. On the other hand, good lubrication of seals, i.e. a sufficiently thick lubricating film, can cause undesirable leakage.

The optimum condition is a relatively thin lubricating film with sufficient adhesive properties.

Principally, increasing piston speed has a positive effect because friction decreases. However, in terms of absolute values there are major differences, depending on how heavily the lubricating film is wiped off. The decrease in friction is attributed to the fact that a substantial lubricating film is formed at higher velocity. This, by the way, also applies to harder compounds. While in the range of lower speeds the friction coefficients greatly vary at different pressures, they tend to equalise at higher speeds.

Friction is directly influenced by the seal diameter because the wear area is greater. The surface roughness of the metallic sealing areas has the same effect. The greater it is, the more "metallic islands" are formed so that the seal again operates in the range of mixed friction.

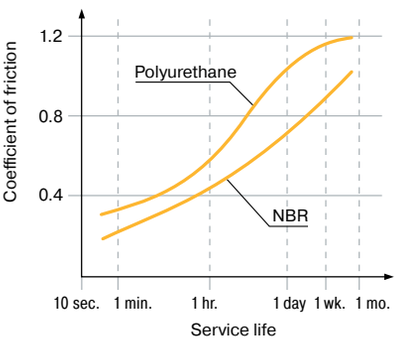

Fig. 8.19 Level of starting friction dependant upon time and compound

As in many other areas static break-out friction of elastomers is significantly higher than dynamic friction. Apart from compound type and seal geometry, tendency to adhesion, deformation, the downtime and the surface finish play a role in increasing break-out friction. The longer the downtime, the more oil is squeezed from the seal face due to preloading. In this condition the level of starting friction approaches that for dry friction and may rise to a level of up to 10 times that found in running friction (figures 8.18 and 8.19). For the same conditions, friction at high temperature (= low viscosity) is higher because the lubricating film is often interrupted.

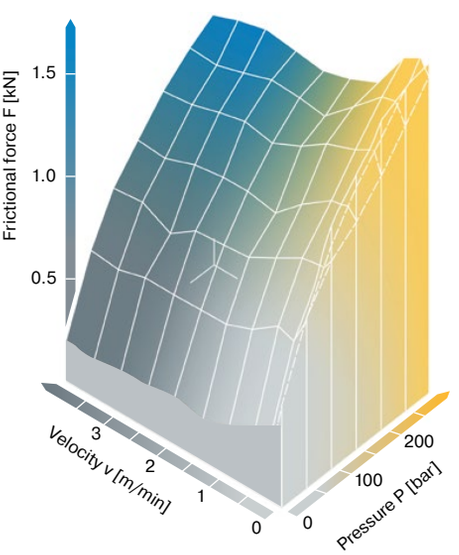

Fig. 8.20 Friction force in relation to pressure and velocity – compact rod seal 90 Shore A

The most important factors can be seen in figure 8.20. Here friction is shown as a function of pressure and velocity. Fig. 8.20 is valid only for a specific seal in a particular application. For other seals and applications the interdependence varies. The **stick-slip effect** is also related to the friction at the sealing

Tel: +45 63 12 83 00 | Email: ps@hymatik.com | www.hymatik.com | Hvidkaervej 27a, DK-5250 Odense SV, Denmark

face. As in this case friction, or more precisely the difference between static and dynamic friction, plays an important role, this phenomenon is also related to the application and/or use of seals made from elastomers where this difference is particularly large.

The three following conditions must simultaneously be present for stick-slip to occur

- Static friction is consistently higher than dynamic friction, which reaches a minimum level at a running velocity v µmin (see Stribeck curve, fig. 8.18)
- The running velocity is below v µmin
- Power is transmitted through an elastic body, usually the compressible oil column when using a cylinder.

To assist in the explanation of the term stick-slip, please refer to fig. 8.21. To accelerate a mass m from zero to maximum velocity, the static µH must be overcome by a force F_1. The spring element is loaded with F_1 and with increasing velocity the friction value μ_H decreases to μ_G and the force to F_2. The amount of force stored in the spring accelerates the mass even further. Once this force has been completely spent, the mass is decelerated by the increasing friction in direction μ_H. This in turn requires another rise in force to a level near of F_1, and the process is repeated.

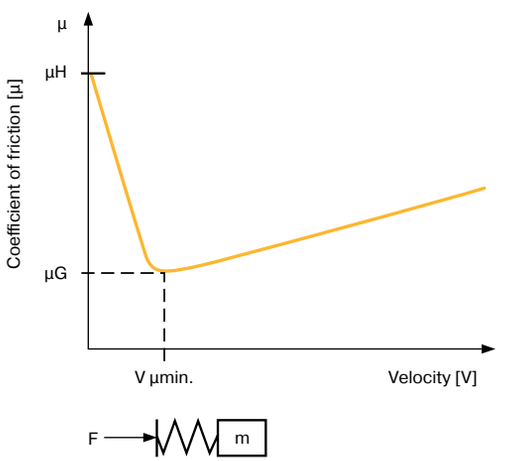

Fig. 8.21 System diagram for stick-slip effect

Therefore, a certain relation between sealing friction and the mass involved in motion (piston and load) with its sliding speed is crucial. Of these three parameters friction is typically the only one that can be influenced. This requires a good coordination between the seal, lubricating film and mating surface with minimal dynamic friction and favourable static friction. Certain improvements can also be achieved by making the system stiffer, requiring the smallest possible oil volume under pressure on the hydraulic side.

The separation of the lubricating film also causes radial oscillations of the seal. It has been noted that when using oils with good wetting performance these phenomena did not occur with the same seals and in the same operating conditions.

Pneumatic seals

In principle the same conditions apply here as for hydraulic seals, except that some of the boundary conditions are significantly aggravated in the case of pneumatic seals. This particularly applies to the less favourable lubrication conditions, which are only roughly comparable to oil-fog lubrication that is no longer desirable, as the lubricating film is continually replenished by the constant supply of new lubricant.

If grease lubrication is used the lubricating film cannot be renewed as new lubricants are not being fed into the system. The film actually diminishes from stroke to stroke due to being "wiped off" by the sealing lips. This process of "lubricant wear" depends on the thickness of the original film and the sliding speed of the piston seal (fig. 8.22).

Again, this means that the selection of a lower sliding speed will lead to a corresponding decrease of residual film thickness. Although this "lubricant wear" is relatively small the coat of lubricant introduced on assembly can be expected to have worn off after a few strokes and low velocity to an extent that at no time during operation a hydrodynamic lubricant film can be restored on the running surfaces.

Breakdown of the lubricating film after long operation ultimately results in contact between the seal and the metal surfaces. This makes the seal operate in the mixed friction range and the increase in friction causes high wear. Therefore, rounded sealing edges have been developed for pneumatic seals, which no longer – or less severely – wipe off the lubricant film. While this has little effect on static friction it notably affects dynamic friction.

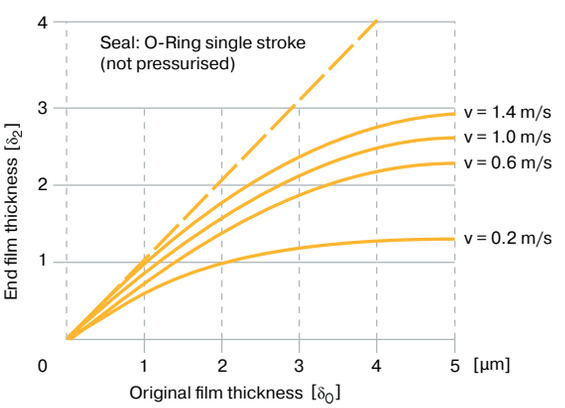

Fig. 8.22 Change in original film thickness as a function of sliding speed during a single stroke

Tel: +45 63 12 83 00 | Email: ps@hymatik.com | www.hymatik.com | Hvidkaervej 27a, DK-5250 Odense SV, Denmark

8 Sealing terminology

If slow pneumatic piston velocities are achieved by controlling supply air flow there is a higher risk of stick-slip. Sharp sealing edges and a short seal lip have an unfavourable effect here as well. A rougher surface of the metallic mating surface favours this boundary condition and surfaces which are too even and polished are conducive to stick-slip as well.

Parameters for lower friction	
O-ring compression	to be decreased
Running surface	$R_{max.}$, R_t to be decreased
Hardness [Shore A]	to be decreased
Sliding speed (avoid high frequency or vibration)	to be increased
Cross-section	to be decreased
Pressure	to be decreased
Lubrication	to be used
Temperature	to be decreased
Groove width (the O-Ring may be in contact with one side only)	to be increased
Diameter of bore or rod	to be decreased

Tab. 8.8

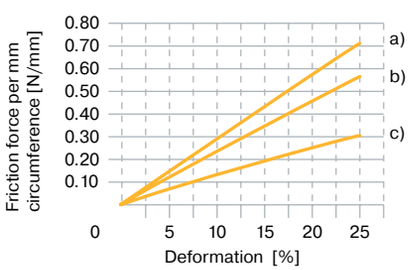

a) Hardness 90 Shore A b) Hardness 80 Shore A c) Hardness 70 Shore A

Conditions:

· Chromed running surface, $R_t \leq 2.5$ µm

· O-Ring N0304-75, 100,000 cycles, medium Aeroshell fluid 4

· Velocity 0.3 m/min

Fig. 8.23 Friction force depending on O-Ring deformation

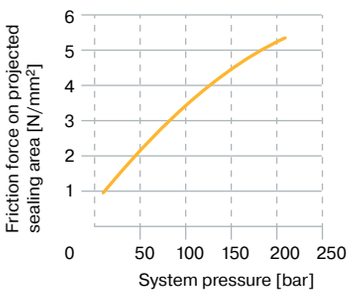

Conditions:

· Chromed running surface, $R_t \leq 2.5$ µm

· O-Ring N0304-75, 100,000 cycles, medium Aeroshell fluid 4

· Velocity 0.3 m/min

Fig. 8.24 Friction force depending on system pressure

8.17.2 Wear

Friction causes wear. However, friction can be anticipated and taken into consideration in the design stage. The wear rate however is difficult to predict but directly governs the lifetime of an O-ring and the frequency of maintenance.

The demands made on sealing devices today mean that, in many cases, hydrodynamic lubrication is eliminated because of the increased wipe-off effect. This means the seal always operates in the mixed friction range and for this reason wear resistance depends on

- Properties of the compound
- Lubricating properties of the medium
- Properties of the mating surface
- Working conditions

Wear in fluid applications can be divided into four groups: **Scoring wear** develops with metal-to-metal contact in mixed friction areas where both materials tend to form mixed crystals. HPL oils help to prevent this because of their additives. However, these additives have no influence rubber/steel or rubber/metal combinations.

Fatigue wear becomes evident through structure loosening and when particles are released from the metal structure and is usually the result of pulsating loads.

Corrosion wear manifests itself in the form of rust and can normally be reduced by suitable additives. Seals are not directly affected by the above types of wear. However, the products of these types of wear can promote seal wear if the seal comes into contact with them.

Tel: +45 63 12 83 00 | Email: ps@hymatik.com | www.hymatik.com | Hvidkaervej 27a, DK-5250 Odense SV, Denmark

Abrasive wear on the other hand can affect both metallic parts and seals. Metals are abraded by hard compounds or by hard foreign matter in the medium. For seals, a rough mating surface is usually the cause of abrasion of the relatively soft elastomer surfaces.

8.17.3 Interaction between friction, wear and the sealing process

In order to obtain a trouble-free sealing process, the running conditions in the clearance gap must be stable. However, stability is difficult to achieve because the relevant parameters often act conversely.
The first consideration is the lubricating film in the clearance gap. To estimate friction, lifetime and leakage, it is necessary to know the width of the gap and how it varies under working conditions. To keep friction as low as possible, the lubricating film should be fairly substantial. This, however, can result in leakage because the "thick" film is wiped off the surface during the return stroke. At the other extreme, a lacking lubricating film causes problems due to high friction. The effectiveness of a seal and friction are therefore inversely proportional. Besides the depth and the width of the clearance gap, the seal hardness is also known to have an effect. The hardness determines the elasticity of the seal and assures that the seal gives way to the lubricating film under pressure. The instantaneous viscosity of the fluid clearly also plays an important role.
It is still not known which factors influence the lubricating film or what the consequences may be. A soft compound favours a thicker film. However, hard and soft compounds behave differently at high velocities, at which harder compounds help to form a lubricating film whereas a soft compound will hinder this by strong adhesion to the running surface.

The lubricating film is very important but is only one of the factors affecting seal friction. Other factors are, for example, the seal compound, seal shape, pressure, velocity, and changes in direction. Often many of these factors are difficult to measure or reproduce. It is therefore understandable that seal manufacturers can only give customers quantified information regarding friction and wear for an individual seal when all parameters affecting the seal are known and reproducible. This precludes any generalisation of measurements obtained in physical laboratory tests. The boundary conditions of tests can never fully correspond to those of the relevant application.

8.18 Ultimate elongation

Ultimate elongation (elongation at break) is the elongation measured as a percentage of the original length at the moment of rupture of a specimen under tensile load. The test is carried out according to DIN 53504.
The ultimate elongation value can be used to assess certain assembly conditions and the necessary expansion, especially for smaller O-rings. Compared to the values obtained on standard specimens, the ultimate elongation of finished parts is lower due to form factor that is to be considered.

8.19 Tensile strength

Tensile strength is measured in N/mm^2 and is the force in N that is necessary to tear up a standard specimen related to the specimen cross-section in mm^2. Elongation rates are specified in the DIN standard

- 500 mm/minute for the standard rings and the S1 standard specimen
- 200 mm/min for S2, S3 and S4, standard speciments
- Tests are performed according to DIN 53504

In practical terms, the results of these tests do not assist the user in selecting a compound because an assembled O-ring does not rely on its tensile strength in order to seal effectively. As with ultimate elongation, tensile strength depends on geometry. O-rings and Parbak® back-up rings with small cross-sections may not achieve the results of standard specimens.

8.20 Stress relaxation

Stress relaxation of elastomers is the reduction of stress in the deformed elastomer resulting from physical and chemical processes. The reduction of stress is made evident, for example, by the gradual decrease of the inherent sealing force of O-Rings over time.
Like compression set, stress relaxation is dependent on the particular type of elastomer, mixture composition, processing parameters, deformation, material thickness, time, temperature and media influence.
A large number of test standards and test rigs are available to measure stress relaxation under laboratory conditions. The most common test standards are ISO 3384 and ASTM D 6147. A distinction is made between continuous and discontinuous measurements. With continuous measurements the elastic force is continuously measured online, whereas with discontinuous measurements the test specimen must be removed from the deformation test rig to measure the elastic force. Since the various test methods give clearly differing results, only those results measured under exactly the same conditions are comparable with each other. With regard to evaluating the performance capability of a seal, stress relaxation values are more conclusive than compression set, since with stress relaxation the retained sealing force is measured, not the remaining deformation. Yet even the results of a stress relaxation measurement only allow a sound conclusion to be drawn concerning the sealing performance in field application if the application conditions are also considered.

Tel: +45 63 12 83 00 | Email: ps@hymatik.com | www.hymatik.com | Hvidkaervej 27a, DK-5250 Odense SV, Denmark

8 Sealing terminology

8.21 Impact resilience

Impact or rebound resilience serves to assess the elastic behaviour of elastomers. The test is performed according to DIN 53512.
This test provides reference points for dynamic behaviour and rubber properties when the elastomer returns to its original state after being subjected to shock-like loads. Section "Low Temperatures" evaluates cold flexibility depending on temperature and based on knowledge of impact resilience, hardness and compression set.

8.22 Radiation

Elastomers lose their flexibility with increasing levels of radiation. Radiation is a medium which causes the polymer chains to cross-link or to break down. Cross-linking density increases along with a rise in radiation levels. At the same time, tensile strength and ultimate elongation decrease, whereas hardness and modulus increase. The elastomer will become brittle if radiation continues. Conversely, butyl rubber IIR becomes soft and sticky.

In general terms elastomers have resistance to radiation levels of 1 M rad = 10^6 rad without losing their elastic properties. 1 M rad is a dosage level which normally would be reached after years of operation. At 10 M rad (= 10^7 rad) physical properties are affected. In order to assess the various changes, tests to determine the ways in which the seal is affected are necessary. With O-rings, the change in compression set is no doubt the key factor. The most suitable compound is EPDM.

In addition to radiation resistance, all other key parameters such as medium, temperature and pressure, etc. must be considered in the selection of a suitable compound.

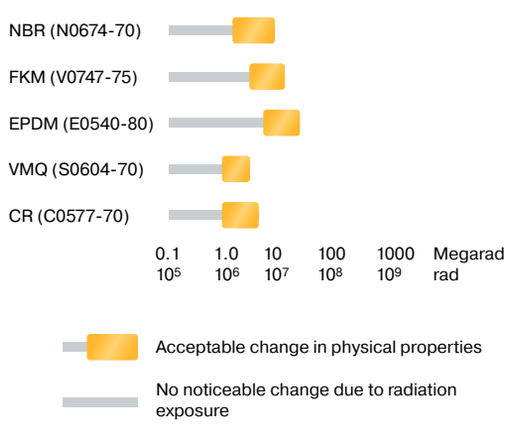

Fig. 8.25

8.23 Cross-section deforming force

The force necessary to deform an O-ring cross-section by a given amount (in per cent) depends on the compound modulus. As it is relative to seal geometry, it is given for different O-ring cross-sections. As a user will typically only know the dimensions and hardness, the following diagrams (fig. 8.26 to 8.30) show the relationship between hardness, compression and cross-section. The information refers to all elastomers, which is why the deformation forces are given for each hardness class (see 8.26 to 8.30). The forces required to deform elastomers during assembly of flanges, for example, can be obtained from the diagrams, and forces which affect seals on less resilient plastic parts can also be estimated.

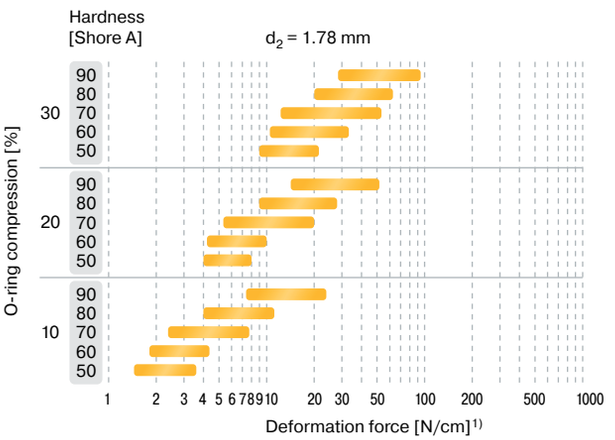

1) Length of O-ring circumference (cm)

Fig. 8.26

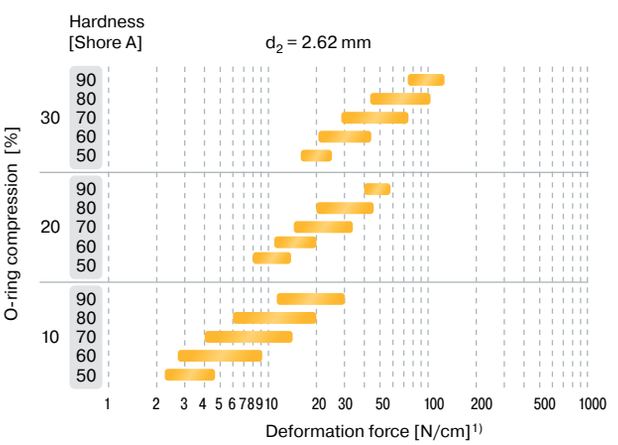

1) Length of O-ring circumference (cm)

Fig. 8.27

Tel: +45 63 12 83 00 | Email: ps@hymatik.com | www.hymatik.com | Hvidkaervej 27a, DK-5250 Odense SV, Denmark

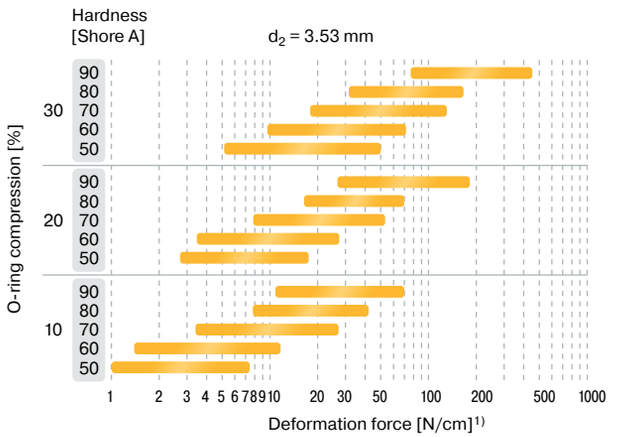

1) *Length of O-ring circumference (cm)*

Fig. 8.28

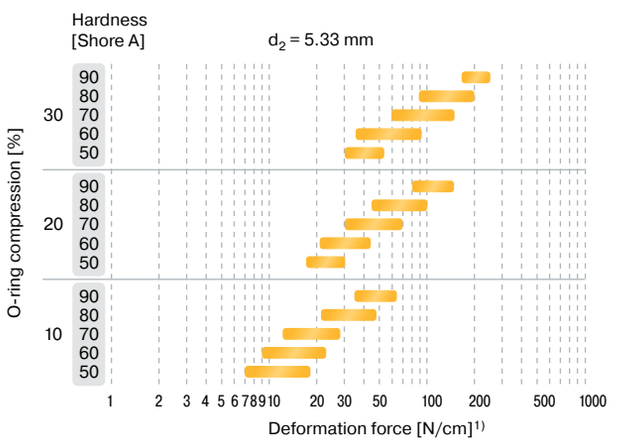

1) *Length of O-ring circumference (cm)*

Fig. 8.29

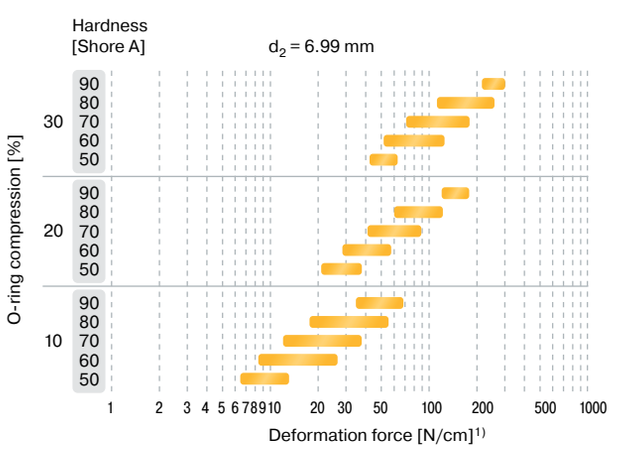

1) *Length of O-ring circumference (cm)*

Fig. 8.30

8.24 Compression of an O-ring cross-section

The O-ring cross-section is deformed when assembled and thus starts the sealing process on the contact surfaces. The minimum compression depends on the type of application. Insufficient deformation can lead to a 100 % compression set in a very short time. Excessive compression will lead to a high percentage-wise permanent deformation.

In dynamic applications, the O-ring may generate higher friction forces and heat.

The characteristic curves shown in figures 8.31 to 8.33 take into account elongation, cross-section reduction and metal tolerances, and effective sealing is achieved under normal conditions.

Guidelines can vary for special applications. Influences such as over-stretched rings, cross-section reduction, influence of temperature, cylinder breathing, eccentricity, etc. must be taken into account.

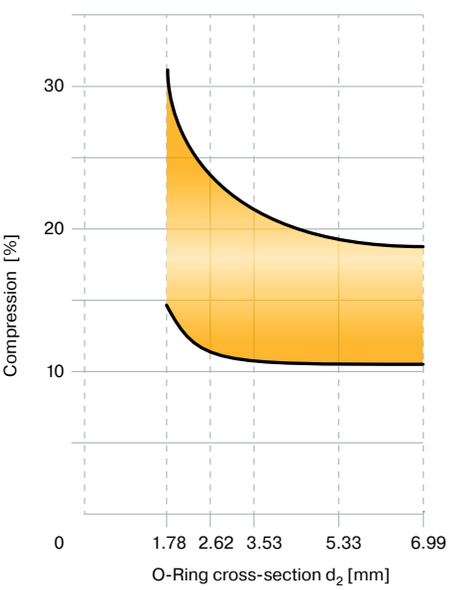

Fig. 8.31 Permissible compression plotted against cross-section d_2 – static seal

Tel: +45 63 12 83 00 | Email: ps@hymatik.com | www.hymatik.com | Hvidkaervej 27a, DK-5250 Odense SV, Denmark

8 Sealing terminology

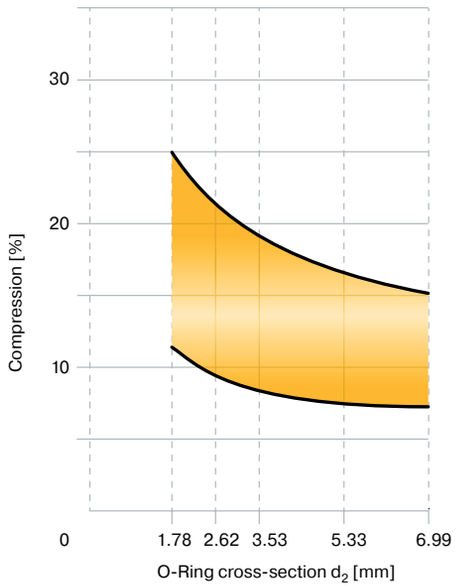

Fig. 8.32 Permissible compression plotted against cross-section d_2 – dynamic hydraulic application

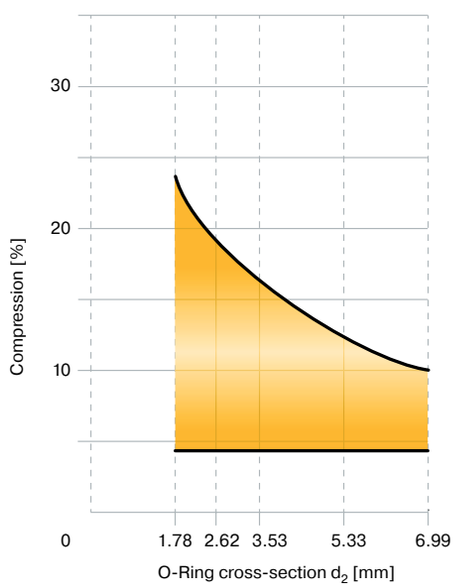

Fig. 8.33 Permissible compression is dependent upon cross-section d_2 – reciprocating seal pneumatic

Cross-section	Nominal dimension [mm]	Tolerance	Smallest size [mm]	Largest size [mm]
d_1	11.89	± 0.19	11.700	12.080
d_2	1.78	± 0.08	1.700	1.860
d_3	12.20	h9	12.157	12.200
d_4	15.00	H8	15.000	15.027
d_9	15.00	f7	14.966	14.984

Tab. 8.9

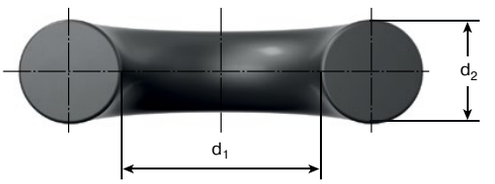

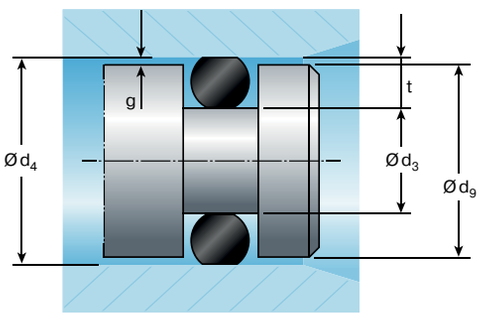

Fig. 8.34 With perfect concentricity

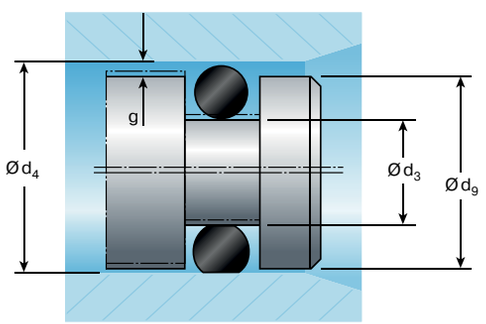

Fig. 8.35 With maximum radial play

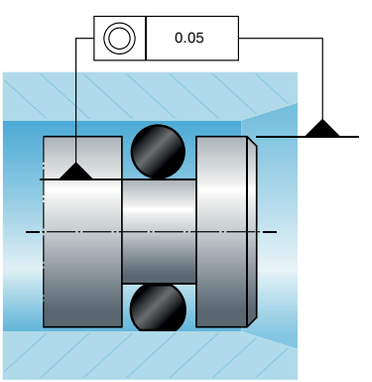

Fig. 8.36 With maximum eccentricity and non-concentric piston and groove diameters

Calculation example for a dynamic piston seal – hydraulic:
A Concentricity (fig. 8.34)
max. gland depth t_{max}=
= 0.5 × (d_{4max} – d_{3min})
= 0.5 × (15.027 – 12.157) = 1.435 mm

Tel: +45 63 12 83 00 | Email: ps@hymatik.com | www.hymatik.com | Hvidkaervej 27a, DK-5250 Odense SV, Denmark

min. O-Ring cross-section d_{2min} = 1.70 mm
reduced cross-section at 4 % elongation (fig. 8.13): 3 %
reduced cross-section $d_{2'}$ = 0.97 × 1.70 = 1.65 mm
min. deformation: $d_{2'} - t_{max}$ = 1.65 – 1.435 = 0.215 mm
in %:

$$\frac{d_{2'} - t_{max}}{d_{2'}} = \frac{1.65 - 1.435}{1.65} = 13\ \%$$

B with max. radial play (fig. 8.35)
max. gland depth t_{max} =
= 0.5 × (d_{9max} – d_{3min}) + d_{4max} – d_{9max}
= 0.5 × (14.984 – 12.157) + 15.027 – 14.984 = 1.457 mm
min. deformation: $d_{2'}$ t_{max} = 1.65 – 1.457 = 0.193 mm
in %:

$$\frac{d_{2'} - t_{max}}{d_{2'}} = \frac{1.65 - 1.457}{1.65} = 11.7\ \%$$

C with max. radial play and maximum eccentricity of groove base with piston diameter (fig. 8.36)
max. gland depth t_{max} =
= 0.5 × (d_{9max} – d_{3min}) + d_{4max} d_{9max} + Eccentricity
= 0.5 × (14.984 – 12.157) + 15.027 – 14.984 + 0.05 = 1.507 mm
min. deformation: $d_{2'}$ t_{max} = 1.65 – 1.07 = 0.143 mm
in %:

$$\frac{d_{2'} - t_{max}}{d_{2'}} = \frac{1.65 - 1.507}{1.65} = 8.7\ \%$$

The example shows the effect which O-Ring elongation and eccentricity of machine elements can have on diametric deformation and O-Ring sealing capability.

8.25 Volume change

O-rings come in contact with a wide range of media. All media, whether, gas, vapour or fluid, tend to be absorbed by the rubber and can affect the material in various ways:

- Physically
- Chemically

Changes due to **physical effects** can be described by two processes that can act concurrently:

1. The elastomer absorbs the medium.
2. The medium extracts soluble portions from the elastomer (in particular, plasticisers).

The result is a change in volume:
when item 1 is greater than 2, the result is **swelling**;
when item 2 is greater than 1, **shrinkage** occurs.
The extent of volume change mainly depends on the type of medium, the elastomer composition, temperature, geometrical shape (material thickness), and the stress state of the rubber part. When compressed an O-ring swells by up to 50 % less than in a free state as is the case in swell tests.

As elastomers have a cross-linked structure, swelling is restricted. It reaches a limit and then remains the same. Changes in volume, both positive and negative, result in changes of the physical elastomer properties, e.g. hardness, elasticity, tensile strength, ultimate elongation, and low temperature behaviour. These changes can, according to their intensity, lead to a degradation of the elastomer and even to complete functional failure. For additional information regarding the compatibility with mineral oil, see section “ECI – Elastomer Compatibility Index”.

A **chemical attack** occurs when the medium reacts chemically with the elastomer, thus causing structural changes (e.g. further cross-linking or degradation). Even the smallest chemical change in an elastomer can lead to a serious change in physical properties (e.g. embrittlement). The compatibility of elastomers with a medium is extremely important. Knowing the property changes makes it possible to assess the suitability or non-suitability of a given elastomer for a specific medium. For more information, see the Media Compatibility Table (see appendix).

8.26 Tear resistance

Tear resistance (N/mm) is defined as the maximum force which causes a nick in a defined specimen to propagate into a tear. The test is carried out according to DIN ISO 34-1 on a straight or angled specimen.
Tear resistance is a measure of sensitivity to notches which might be caused by impurities or during assembly.

8.27 Tensile set

The tensile set describes the tendency of an elastomer to lose its elastic memory after a period of elongation under load. The test is carried out according to DIN ISO 2285 and its results depend on:

- The period of time and temperature of testing
- The cross-section and size of specimens
- Elongation
- Cooling in stretched or relieved condition

The tensile set and the compression set describe the elastic behaviour of a rubber compound.

Tel: +45 63 12 83 00 | Email: ps@hymatik.com | www.hymatik.com | Hvidkaervej 27a, DK-5250 Odense SV, Denmark

9 Quality criteria

9.1 Quality

In compliance with the definition of quality given by DGQ, Deutsche Gesellschaft für Qualität (German Society for Quality), it is our policy to produce quality by selecting the best materials, using advanced production methods, rigorous production monitoring and continuous training of our employees to manufacture quality products:

"Quality is the condition of a product or service which makes it suitable for its purpose and complying with existing requirements," (DGQ 22, 1974).

As quality has to start at the source and cannot be inspected into a product, we have designed a system to rule out influences which negatively affect the quality of our products.

Our Integrated Management System (IMS), consisting of Quality Management, Environmental Management and Occupational Health & Safety, which describes all the actions taken in these areas and is constantly aligned with the technology currently used in our production processes as well as technical requirements, is an example of our permanent striving for continuous improvement.

We are certified in accordance with ISO 9001 and ISO/TS 16949.

9.2 Evaluation criteria for O-Rings

The criteria for evaluating the manufacturing quality of O-rings are defined in DIN ISO 3601-3 (see table 9.1). The permissible limits are listed in table 9.2 and subdivided into levels "N", "S" and "CS".

Level N
The limit values for permissible O-ring surface deviations correspond to the high requirements for industrial applications. They are applicable to both static and dynamic O-ring seals. Permissible defects do not affect the O-ring's function. Inspections of all O-rings according to level N are standard practice in our operations.

Level S
In special applications, e.g. in the aerospace industry, even stricter limits for permissible defect sizes are set. This requires a considerably higher manufacturing and inspection effort, which significantly increases the price of these O-rings. The additional requirement for "Level S" quality must be stated in the purchase order along with the application/intended purpose. Our standard O-rings are all inspected according to "Level N" (see above).

Level CS
Level CS makes the highest demands in surface quality. This level should be reserved for critical special applications, as these tolerances can only be achieved by highly special production and inspection processes. The cost of level CS O-rings is correspondingly high.

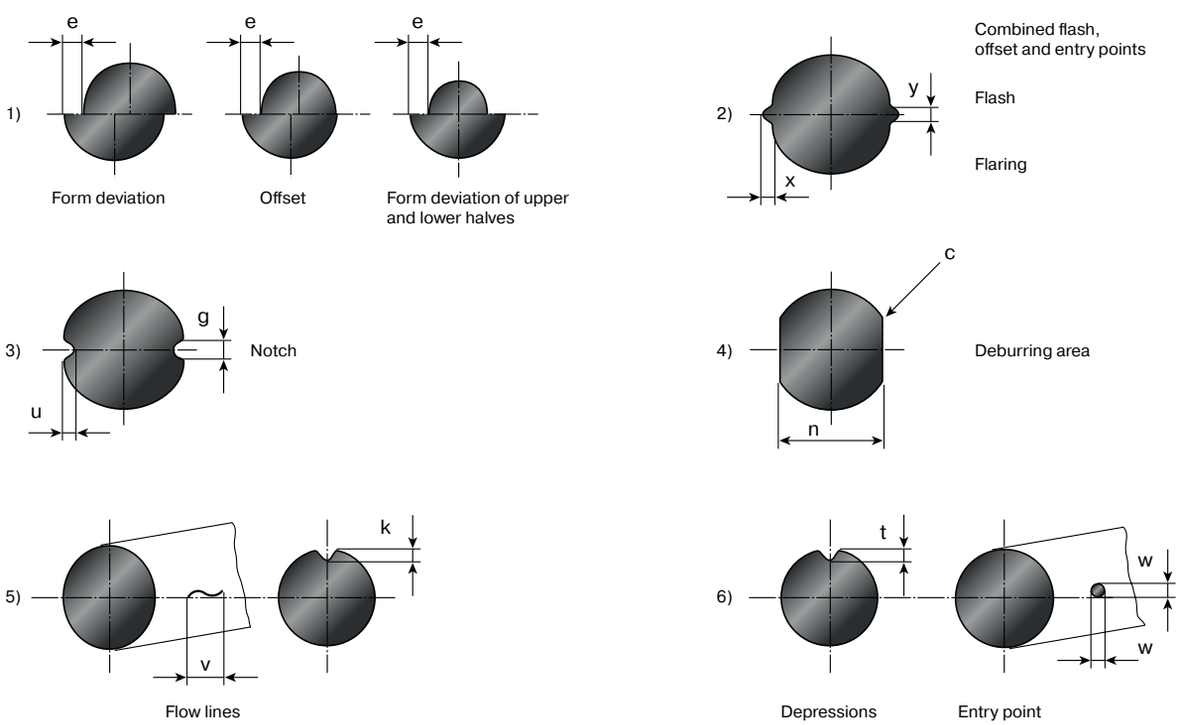

Fig. 9.1 Mould and surface finish defects

Tel: +45 63 12 83 00 | Email: ps@hymatik.com | www.hymatik.com | Hvidkaervej 27a, DK-5250 Odense SV, Denmark

9 Quality criteria

Figurenumber	Deviation	Definition
1)	Form deviation	upper and lower O-Ring halves out of alignment or uneven
1)	Offset	offset O-Ring halves due to displacement from one part of the mould to another
1)	Form deviation of upper and lower halves	cross-section radius different in each half of O-Ring, caused by different dimensions in the two halves of the mould
2)	Combined flash, offset and entry points	a combination of flash, offset and entry points
2)	Flash	film-like material around the parting line on the inner and/or outer diameter(s), caused by a separation in the mould or insufficient deburring
2)	Flaring	continuous ridge of material on the parting line caused by wear of mould flanges or excessively rounded mould corners
3)	Notch	a shrinkage at the parting line with a large “U” or “W”-shaped cross-section
4)	Burr area	a flattened and often rough area along the inner and/or outer diameter(s) of the O-Ring, caused by deburring
5)	Flow lines	a thread-like recess, often curved, not very deep and with rounded flanges caused by elastomer flow lines in the mould
6)	Entry point	shallow, sometimes triangular, recess at the parting line on the inner and/or outer diameter(s) caused by deformity in mould flanges at the parting line
6)	Depressions	surface defects which are mostly irregular in shape, caused by the removal of inclusions from the surface, imprints of mould imperfections, air bubbles or an incompletely-filled mould
-	Foreign material not permissible	all inclusions of foreign material on the O-Ring surface, including contamination, impurities, etc.

Tab. 9.1 Type and description of mould and surface finish defects

Deviation [1]	Dimension [2]	Level N					Level S					Level CS				
		d_2 according to DIN ISO 3601-3					d_2 according to DIN ISO 3601-3					d_2 according to DIN ISO 3601-3				
		> 0.8 ≤ 2.25	> 2.25 ≤ 3.15	> 3.15 ≤ 4.50	> 4.50 ≤ 6.30	> 6.30 ≤ 8.40	> 0.8 ≤ 2.25	> 2.25 ≤ 3.15	> 3.15 ≤ 4.50	> 4.50 ≤ 6.30	> 6.30 ≤ 8.40	> 0.8 ≤ 2.25	> 2.25 ≤ 3.15	> 3.15 ≤ 4.50	> 4.50 ≤ 6.30	> 6.30 ≤ 8.40
1)	e	0.08	0.10	0.13	0.15	0.15	0.08	0.08	0.10	0.12	0.13	0.04	0.04	0.06	0.06	0.08
2)	x	0.10	0.12	0.14	0.16	0.18	0.10	0.10	0.13	0.15	0.15	0.07	0.07	0.10	0.13	0.13
2)	y	0.10	0.12	0.14	0.16	0.18	0.10	0.10	0.13	0.15	0.15	0.10	0.10	0.13	0.13	0.13
3)	g	0.18	0.27	0.36	0.53	0.70	0.10	0.15	0.20	0.20	0.30	not permissible				
3)	u	0.08	0.08	0.10	0.10	0.13	0.08	0.08	0.10	0.10	0.13	not permissible				
4)	n	[3]					[3]					[3]				
5)	v	1.50[1]	1.50[1]	6.50[1]	6.50[1]	6.50[1]	1.50[1]	1.50[1]	1.00[1]	5.00[1]	5.00[1]	1.50[2]	1.50[2]	1.50[2]	4.56[2]	4,56[2]
5)	k	0.08	0.08	0.08	0.08	0.08	0.05	0.05	0.05	0.05	0.05	0.05	0.05	0.05	0.05	0.05
6)	w	0.60	0.80	1.00	1.30	1.70	0.15	0.25	0.40	0.63	1.00	0.08	0.13	0.18	0.25	0.38
6)	w	-	-	-	-	-	-	-	-	-	-	0.13[3]	0.25[3]	0.38[3]	0.51[3]	0.76[3]
6)	t	0.08	0.08	0.10	0.10	0.13	0.08	0.08	0.10	0.10	0.13	0.08	0.08	0.10	0.10	0.13
Foreign material not permissible							not permissible					not permissible				

[1] See table 9.1

[2] See fig. 9.1

[3] Deviations from the round cross-section are permissible if the flat section smoothly joins the round and d_2 is maintained.

[4] 0.05 × d_1 or value v, depending on which is larger

[5] 0.03 × d_1 or value v, depending on which is larger

Tab. 9.2 Limits for permissible mould and surface defects

Tel: +45 63 12 83 00 | Email: ps@hymatik.com | www.hymatik.com | Hvidkaervej 27a, DK-5250 Odense SV, Denmark

10 Damage analysis

10.1 Requirements to be met by O-Rings

It is often difficult to determine whether design parameters, assembly errors or changes in working conditions are responsible for O-ring failure. In many cases, faults are caused by several different factors that occur simultaneously.

Optimum lifetime and reliability can only be achieved by reducing the probability of seal failure through good design practice, the correct selection of compounds, practical tests and trained assembly personnel.

The following descriptions characterise the most frequent types of O-ring failures, and describe how these can be corrected.

Since seals are used in a wide range of applications, the resulting requirements may differ as well.
Typical requirements include:

- Media resistance
- Temperature resistance
- Pressure resistance
- Abrasion resistance
- Space-saving design
- Exchangeability

Owing to the diversity of applications and the fact that the relatively simple geometry is specified, chemical and physical properties are particularly critical factors. This is where Parker's field application consulting support comes in to help identify the material best suiting the user's needs from the wide range of synthetic rubber compounds available or to select the one that offers a viable compromise for the various requirements.

Usually, defects are evident directly on the O-ring. This enables corrections to be made, such as changing the compound.

10.2 Gap extrusion – the effects of pressurisation

The sealing effect of an O-ring results from its elasticity in a compressed, non-pressurised state between two sealing areas (fig. 10.1). When pressure is built up, O-rings behave like incompressible fluids and increase their contact pressing force on the sealing areas proportionally to the pressure (fig. 10.2). With rising pressure, an increasingly larger O-ring volume is pressed into the sealing gap, shears off – is "peeled off" – or is subjected to "nibbling" by the breathing of the machine (fig. 10.3).



Fig. 10.1 Due to its elastic behaviour the O-ring exerts its sealing effect in the compressed, non-pressurised state between two sealing areas.



Fig. 10.2 On pressurising, the O-Ring acts like an incompressible fluid, exerting a pressure on the gland proportional to the system pressure

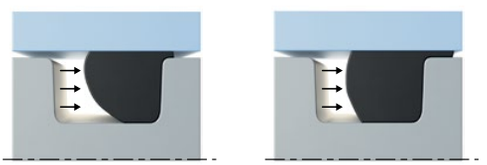

Fig. 10.3 At higher pressure a larger O-ring volume is pushed into the gap. A back-up ring prevents gap extrusion.

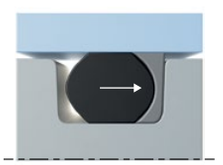

Fig. 10.4 The back-up ring on the non-pressurised side prevents gap extrusion.

"Peeled" or "nibbled" surfaces represent the most common O-Ring defect. It causes the extruded O-ring volume to be jammed in the gap and to be peeled off (fig. 10.5 to 10.7).

Tel: +45 63 12 83 00 | Email: ps@hymatik.com | www.hymatik.com | Hvidkaervej 27a, DK-5250 Odense SV, Denmark



Fig. 10.5 Extruded O-Ring



Fig. 10.6 Partially extruded O-Ring



Fig. 10.7 Peeled O-Ring

Extrusion may occur with:

- Dynamic sealing
- Static sealing with pulsating pressure
- Static sealing with high pressure
- Breathing machine parts
- Excessively large gaps

The main reasons are known. The need for economical processing processing often leads to excessive tolerances and therefore excessively large gaps. The other cause which goes largely unnoticed is the tendency of lids, flanges or cylinders to flex and that of bolts to stretch under load.

In these cases, the inner strength of the elastomer compound is no longer sufficient to retract faster than the machine part which is opening the gap. Or the strength of the elastomer is exceeded and parts of the O-ring shear off and are pushed into the gap.

The hardness of the elastomer material has a major influence on the extrusion resistance.
Physical properties (stress values) can deteriorate as a result of exposure to high temperatures and swelling.

Extrusion failure can also be caused by the following influences:

- O-ring material which is too soft
- Physical and/or chemical influences (swelling, change in hardness etc.)
- Irregular gaps caused by eccentricity
- Sharp edges in O-ring gland
- Overfilled gland
- O-ring material that softens at higher temperatures

If extrusion occurs because of the factors listed above, O-ring failure can be prevented by the following measures:

- Tighten tolerances to reduce gap dimension
- Fit a back-up ring
- Increase hardness of O-ring compound
- Check media compatibility
- Restrict tolerances that lead to eccentricity or change machine parts that cause breathing
- Change gland radius (at least 0.10 to 0.40 mm)

Fig. 10.5 and 10.6 show the ranges in which back-up rings must be used due to high pressures and/or large diameter clearance. Two back-up rings must be used for reciprocating sealing applications.

10.3 Failure due to compression set

Compression set, the partial or total loss of an elastomer´s elastic memory, is another common failure. When an O-ring no longer elastically contacts the sealing areas its sealing effect ceases.

The main cause of this can be attributed to the compound and the working conditions.

The elasticity of the material depends on the composition of the rubber and the working temperature as well as on the type and duration of the deformation, plus the compound's ageing property and chemical resistance. The sealing effect of an O-ring decisively depends on low compression set. Compression set describes elastic behaviour in working conditions and across the seal's service life (comp. section 8.6).

Tel: +45 63 12 83 00 | Email: ps@hymatik.com | www.hymatik.com | Hvidkaervej 27a, DK-5250 Odense SV, Denmark

10 Damage analysis

The degradation of elastic properties can generally be explained by the loss of crosslinks between molecule chains or as the creation of new crosslinks (brought about by the supply of energy - hardening). The compression set at low temperatures is generally reversible. At higher temperatures the elasticity returns and the sealing force acts again. This gives a reference point for the low-temperature flexibility of the elastomer.

The causes of high compression set and the resulting loss of the sealing effect are:

- Poor compound quality
- Wrong gland design (insufficient or excessive deformation increases the percentage-wise compression set, see section 8.6)
- Working temperature higher than expected (rubber hardens)
- Contact with incompatible medium

Failures of this kind can be avoided by the following changes:

- Select elastomer suitable for working conditions
- Use a good quality compound mix with low compression set
- Reduce system temperature at seal
- Reduce friction heat
- Check O-ring material
- Use correct gland design



Fig. 10.8 Damage pattern caused by high compression set

10.4 Twisted O-Rings, spiral defects

These types of damage appear in a typical form. External characteristics are spiral-shaped markings or cuts in the O-ring surface which typically lead to destruction (fig. 10.9 and 10.10).

The damage generally occurs as follows:

- In dynamic applications, this defect can occur because of varying compression of the O-ring cross-section due to out-of-roundness or eccentricity of the components to be sealed. Thus, parts of the O-ring will slide, while others roll. This leads to spiral marks or cuts due to twisting of the O-ring. They usually have an angle below 45°.
- In static applications, the O-ring has typically been twisted during its installation in the gland. Due to an unfavourable ratio between the cross-section and the inner diameter (large diameter and small cross-section) the O-ring rolls on the assembly area into the gland.



Fig. 10.9 Twisted O-Ring with spiral markings



Fig. 10.10 Twisted O-Ring with cuts in surface

The causes of damage are:

- Out-of-round assembly components
- Eccentric assembly components; very rough surfaces
- Non-existent or poor lubrication
- O-ring material too soft (lack of dimensional stability)
- Insufficient stroke speed (lubricating film can be pushed away)
- Assembly error (O-ring installed in rolled condition)
- Unfavourable cross-section-inner diameter ratio

Failures of this kind can be avoided by the following changes:

- Reduce out-of-roundness or eccentricity of machine parts
- Smaller deformation of O-ring cross-section diameter
- Ensure lubrication
- Improve surface finish
- Use harder O-ring
- Choose a larger cross-section-inner diameter ratio
- Careful assembly with use of lubricant (e.g Parker O-Lube or Super-O-Lube)

Tel: +45 63 12 83 00 | Email: ps@hymatik.com | www.hymatik.com | Hvidkaervej 27a, DK-5250 Odense SV, Denmark

10.5 Explosive decompression

Since all elastomers are permeable, pressurised gases will penetrate the sealing material. The higher the pressure the more gas is pressed into the seal. If the ambient pressure around the seal is reduced quickly, the gas inside the seal will expand and escape, or there will be a formation of blisters on the surface. Some of these blisters may burst and damage the surface. This process is called explosive decompression. A seal's susceptibility to damage depends, for example, on pressure, decompression time, the type of gas, type of compound and the O-Ring cross-section. Damage rarely occurs below 30 bar. Generally, CO_2 gas is more likely to lead to blistering and surface destruction than nitrogen, yet any compressed gas may cause this type of surface destruction after sudden decompression (fig. 10.11).



Fig. 10.11 O-Ring damaged by explosive decompression

Compounds with very high gas permeability rates – such as silicone compounds – will release the gas inside more quickly in case of rapid decompression than those with very low gas permeability rates, such as butyl compounds.

The following compounds show good resistance to explosive decompression: N0552-90 (NBR), KB163-90 (HNBR), V1238-95 (FKM) with NORSOK M-710 respectively certified to ISO 23936-2.

Measures to prevent O-ring destruction by explosive decompression:

- Extend time for decompression so that the gas that has diffused into the seal can escape more slowly
- Select an O-ring compound with good resistance against explosive decompression

10.6 Abrasion

O-rings used in dynamic applications are prone to friction and thus abrasion. The following correlations should be considered in this context:

- Friction is proportional to surface compression
- The temperature increase of the seal is proportional to friction in the contact area

The individual parameters must be considered along with the medium to reach the optimum compromise.

In static applications damage by abrasion may occur in combination with very high pulsating pressure. The pulsating pressure causes the O-ring to move inside the gland which, in the case of poor surface quality, leads to higher abrasion. This problem can be resolved by reducing surface roughness.



Fig. 10.12 Wear is seen as flattening of O-Ring on one side

10.7 Fitting errors

To ensure that O-rings function properly over long periods of time, the following instructions must be followed during assembly to prevent damage to the seals. Fitting errors can occur in the following situations:

- Pulling O-rings over sharp edges and threads
- Running chambers and bores through valve blocks
- Using oversized O-rings in piston / cylinder applications
- Using undersized O-rings in rod seals (installation of stretched O-rings, "Gough-Joule effect")
- Twisting, shearing or cutting of O-ring during asssembly
- Assembly without lubrication
- Contamination

Fitting errors can be avoided by the following measures:

- Break all sharp edges, use fitting sleeves or stick down threads
- Provide lead-in chamfer between 15° and 20°
- Cleanliness during assembly
- Use assembly grease
- Check O-ring size before assembly
- Assemble with care

Please also follow the assembly instructions in section 2.

Tel: +45 63 12 83 00 | Email: ps@hymatik.com | www.hymatik.com | Hvidkaervej 27a, DK-5250 Odense SV, Denmark

11 Appendix

11.1 Standards

11.1.1 O-Ring standards

Industry – Germany

DIN ISO 3601-1: Fluid power systems – O-Rings – Part 1: Inside diameters, cross-sections, tolerances and designation codes (ISO 3601-1:2012 + Cor. 1:2012).

DIN ISO 3601-2: Fluid power systems – O-rings – Part 2: Housing dimensions for general applications (ISO 3601-2:2008).

DIN ISO 3601-3: Fluid power systems – O-Rings – Part 3: Quality acceptance criteria (ISO 3601-3:2005).

DIN ISO 3601-4: Fluid power systems – O-Rings – Part 4: Anti-extrusion rings (back-up rings) (ISO 3601-4:2008).

Aeronautical – Germany

11.1.2

DIN 65202: Aerospace series – Elastomeric O-Rings – Dimensions. This standard specifies the dimensions and limit deviations for O-Rings (toroidal sealing rings) of special dimensional accuracy, preferably for use in aerospace applications.

DIN 65203: Aerospace series – Elastomeric O-Rings – Technical specification.

International

11.1.3

ISO 3601-1: Fluid power systems – O-Rings – Part 1: Inside diameters, cross-sections, tolerances and designation codes.

ISO 3601-3: Fluid power systems – O-Rings – Part 3: Quality acceptance criteria.

ISO 3601-5: Fluid power systems – O-Rings – Part 5: Suitability of elastomeric materials for industrial applications.

United Kindom

BS 1806: Specifies dimensions (inches) for inner diameters and cross-sections , permissible deviations and clearance gaps. O-Ring dimensions are identical to the Parker 2-xxx series. The table 11.1 gives a cross-reference among the various European standard O-Ring specifications.

BS 4518: Specifies dimensions, deviations and clearance gaps, for which cross-section diameters are graded as follows: 1.6, 2.4, 3.0, 5.7 and 8.4 mm.

France

The French standards are based on the proposals for ISO 3601 Parts 1 to 3.

NF-T-47-501 is comparable to ISO 3601 Part 1.
NF-T-47-502 is comparable to ISO 3601 Part 2.
NF-T-47-503 is comparable to ISO 3601 Part 3.

French purchase codes R 1 to R 27 are identical to Parker sizes 5-578 to 5-606. R 28 to R 88 are identical to Parker sizes 2-325 to 2-349 and 2-425 to 2-460. For more details, see cross-references of European O-Ring codes, table 11.1.

Italy

A committee for seal and hose standardisation exists in the UNI and is working on an Italian O-Ring standardisation. The industry continues to use the American AS 568 B standard specification. In certain areas the French R 1 to R 88 are used.

Sweden

O-Rings are standardized under **SMS 1586**, Swedish military standards. Cross sections 1.6 / 2.4 / 3.0 / 5.7 and 8.4 mm are recommended.

USA

AS 568 B: (Aerospace Standard) published by the SAE (Society of Automotive Engineers) specifies sizes and tolerances.
The cross-section diameters correspond to ISO 3601-1 and DIN 3771 Part 1 (within a few hundredths of a millimetre). AS 568 B is linked to a dimension code that corresponds to Parker standard O-Ring dimensions 2-xxx and 3-xxx. Table 11.1 shows a cross-reference of O-Ring designations and dimensions used in Europe.

11.1.4 Other standards

DIN 7716: Rubber products; requirements for storage, cleaning and maintenance.

Tel: +45 63 12 83 00 | Email: ps@hymatik.com | www.hymatik.com | Hvidkaervej 27a, DK-5250 Odense SV, Denmark

11 Appendix

DIN 9088: Aerospace series – storage life of rubber products.

DIN 24320: Fire-resistant fluids – hydraulic fluids of categories HFAE and HFAS – characteristics and requirements.

DIN 51524-1: Pressure fluids – hydraulic oils – Part 1: HL hydraulic oils; minimum requirements.

DIN 51524-2: Pressure fluids – hydraulic oils – Part 2: HLP hydraulic oils; minimum requirements.

DIN EN 590: Automotive fuels – diesel – requirements and test methods; German version EN 590:2009+A1:2010.

DIN 51603-1: Liquid fuels – fuel oils – part 1: fuel oils EL, specifications.

DIN 51603-3: Liquid fuels – fuel oils – part 3: fuel oil S, minimum requirements.

DIN 51603-4: Liquid fuels – fuel oils – part 4: fuel oils R, minimum requirements.

DIN 53603-5: Liquid fuels – fuel oils – part 5: fuel oils SA, minimum requirements.

DIN 53504: Testing of rubber – determination of tensile strength at break, tensile stress at yield, elongation at break and stress values in a tensile test.

DIN 53512: Testing of rubber – determination of rebound resilience (Schob pendulum).

DIN ISO 4649: Rubber, vulcanized or thermoplastic – determination of abrasion resistance using a rotating cylindrical drum device (ISO 4649:2010).

ISO 132:2017-07: Rubber, vulcanized or thermoplastic – determination of flex cracking and crack growth (De Mattia).

DIN ISO 13226: Rubber – standard reference elastomers (SREs) for characterizing the effect of liquids on vulcanized rubbers (ISO 13226:2018).

DIN 53545: Determination of low-temperature behaviour of elastomers; principles and test methods.

DIN ISO 34-1: Rubber, vulcanized or thermoplastic – determination of tear strength – part 1: trouser, angle and crescent test pieces (ISO 34-1:2004), Corrigenda to DIN ISO 34-1:2004-07.

DIN ISO 48-2: Rubber, vulcanized or thermoplastic - Determination of hardness (hardness between 10 IRHD and 100 IRHD) (ISO 48:2007).

DIN ISO 815-1: Rubber, vulcanized or thermoplastic - Determination of compression set - Part 1: At ambient or elevated temperatures (ISO 815-1:2019).

DIN ISO 815-2: Rubber, vulcanized or thermoplastic – determination of compression set – part 2: at low temperatures (ISO 815-2:2019).

DIN EN 10204: Metallic products – types of inspection documents; German version EN 10204:2004.

DIN ISO 1183-2: Plastics – methods for determining the density of non-cellular plastics - part 2: density gradient column method (ISO 1183-2:2004); German version EN ISO 1183-2:2004.

DIN ISO 1629: Rubber and latices – nomenclature (ISO 1629:1995).

DIN ISO 1817: Rubber, vulcanized – determination of the effect of liquids (ISO 1817:2005).

DIN ISO 2285: Rubber, vulcanized or thermoplastic – determination of tension set under constant elongation, and of tension set, elongation and creep under constant tensile load (ISO/DIS 2285:2012).

DIN ISO 2859-1: Sampling procedures for inspection by attributes – part 1: sampling schemes indexed by acceptance quality limit (AQL) for lot-by-lot inspection (ISO 2859-1:1999 including technical corrigendum 1:2001), corrigenda to DIN ISO 2859-1:2004-01.

DIN ISO 3302-1: Rubber – tolerances for products – part 1: dimensional tolerances (ISO 3302-1:1996).

VDMA 24317: Fluid systems; fire-resistant hydraulic fluids, minimum technical requirements.

LN 9214: Aerospace; toroidal sealing rings (O-Rings) for solderless tube fittings with coupling sleeves, flareless.

ASTM D 395: Standard test methods for rubber property – compression set.

ASTM D 412a: Standard test methods for vulcanized rubber and thermoplastic elastomers – tension.

ASTM D 471a: Standard test method for rubber property – effect of liquids.

ASTM D 1329: Standard test method for evaluating rubber property – retraction at lower temperatures (TR Test).

Tel: +45 63 12 83 00 | Email: ps@hymatik.com | www.hymatik.com | Hvidkaervej 27a, DK-5250 Odense SV, Denmark

11 Appendix

11.2 Size cross-reference

Parker no.	MIL-P-5516,Class B No.	B.S. 1806 No.	UK code no.	French code no.
2-004	-	-004	-	-
2-005	-	-005	-	-
2-006	AN6227B-1	-006	R. 101	AN-1
2-007	AN6227B-2	-007	R. 102	AN-2
2-008	AN6227B-3	-008	R. 103	AN-3
2-009	AN6227B-4	-009	R. 104	AN-4
2-010	AN6227B-5	-010	R. 105	AN-5
2-011	AN6227B-6	-011	R. 107	AN-6
2-012	AN6227B-7	-012	R. 110	AN-7
2-013	-	-013	-	-
2-014	-	-014	-	-
2-015	-	-015	-	-
2-016	-	-016	-	-
2-017	-	-017	-	-
2-018	-	-018	-	-
2-019	-	-019	-	-
2-020	-	-020	-	-
2-021	-	-021	-	-
2-022	-	-022	-	-
2-023	-	-023	-	-
2-024	-	-024	-	-
2-025	-	-025	-	-
2-026	-	-026	-	-
2-027	-	-027	-	-
2-028	-	-028	-	-
2-110	AN6227B-8	-110	R. 111	AN-8
2-111	AN6227B-9	-111	R. 113	AN-9
2-112	AN6227B-10	-112	R. 116	AN-10
2-113	AN6227B-11	-113	R. 118	4N-11
2-114	AN6227B-12	-114	R. 120	AN-12
2-115	AN6227B-13	-115	R. 122	AN-13
2-116	AN6227B-14	-116	R. 124	AN-14
2-117	-	-117	R. 127	-
2-118	-	-118	R. 130[1)]	-
2-119	-	-119	R. 132[1)]	-
2-120	-	-120	-	-
2-121	-	-121	-	-
2-122	-	-122	-	-
2-123	-	-123	-	-
2-124	-	-124	-	-
2-125	-	-125	-	-
2-126	-	-126	-	-
2-127	-	-127	-	-
2-128	-	-128	-	-
2-129	-	-129	-	-
2-130	-	-130	-	-
2-131	-	-131	-	-
2-132	-	-132	-	-
2-133	-	-133	-	-
2-134	-	-134	-	-
2-135	-	-135	-	-
2-136	-	-136	-	-
2-137	-	-137	-	-
2-138	-	-138	-	-
2-139	-	-139	-	-
2-140	-	-140	-	-
2-141	-	-141	-	-
2-142	-	-142	-	-
2-143	-	-143	-	-
2-144	-	-144	-	-
2-145	-	-145	-	-
2-146	-	-146	-	-
2-147	-	-147	-	-
2-148	-	-148	-	-
2-149	-	-149	-	-
2-210	AN6227B-15	-210	R. 125	AN-15
2-211	AN6227B-16	-211	R. 126	AN-16
2-212	AN6227B-17	-212	R. 129	AN-17
2-213	AN6227B-18	-213	R. 131	AN-18
2-214	AN6227B-19	-214	R. 133	AN-19
2-215	AN6227B-20	-215	R. 135	AN-20
2-216	AN6227B-21	-216	R. 136	AN-21
2-217	AN6227B-22	-217	R. 137	AN-22
2-218	AN6227B-23	-218	R. 138	AN-23
2-219	AN6227B-24	-219	R. 139	AN-24
2-220	AN6227B-25	-220	R. 140	AN-25
2-221	AN6227B-26	-221	R. 141	AN-26
2-222	AN6227B-27	-222	R. 142	AN-27
2-223	AN6230B-1	-223	R. 146[1)]	-
2-224	AN6230B-2	-224	R. 149[1)]	-
2-225	AN6230B-3	-225	R. 152[1)]	-
2-226	AN6230B-4	-226	R. 155[1)]	-
2-227	AN6230B-5	-227	R. 158[1)]	-
2-228	AN6230B-6	-228	R. 161[1)]	-
2-229	AN6230B-7	-229	R. 164[1)]	-
2-230	AN6230B-8	-230	R. 167[1)]	-
2-231	AN6230B-9	-231	R. 170[1)]	-
2-232	AN6230B-10	-232	R. 173[1)]	-
2-233	AN6230B-11	-233	R. 176[1)]	-
2-234	AN6230B-12	-234	-	-

Tel: +45 63 12 83 00 | Email: ps@hymatik.com | www.hymatik.com | Hvidkaervej 27a, DK-5250 Odense SV, Denmark

11 Appendix

Parker no.	MIL-P-5516,Class B No.	B.S. 1806 No.	UK code no.	French code no.
2-235	AN6230B-13	-235	-	-
2-236	AN6230B-14	-236	-	-
2-237	AN6230B-15	-237	-	-
2-238	AN6230B-16	-238	-	-
2-239	AN6230B-17	-239	-	-
2-240	AN6230B-18	-240	-	-
2-241	AN6230B-19	-241	-	-
2-242	AN6230B-20	-242	-	-
2-243	AN6230B-21	-243	-	-
2-244	AN6230B-22	-244	-	-
2-245	AN6230B-23	-245	-	-
2-246	AN6230B-24	-246	-	-
2-247	AN6230B-25	-247	-	-
2-248	AN6230B-26	-248	-	-
2-249	AN6230B-27	-249	-	-
2-250	AN6230B-28	-250	-	-
2-251	AN6230B-29	-251	-	-
2-252	AN6230B-30	-252	-	-
2-253	AN6230B-31	-253	-	-
2-254	AN6230B-32	-254	-	-
2-255	AN6230B-33	-255	-	-
2-256	AN6230B-34	-256	-	-
2-257	AN6230B-35	-257	-	-
2-258	AN623OB-36	-258	-	-
2-259	AN6230B-37	-259	-	-
2-260	AN6230B-38	-260	-	-
2-261	AN6230B-39	-261	-	-
2-262	AN6230B-40	-262	-	-
2-263	AN6230B-41	-263	-	-
2-264	AN6230B-42	-264	-	-
2-265	AN623OB-43	-265	-	-
2-266	AN623OB-44	-266	-	-
2-267	AN6230B-45	-267	-	-
2-268	AN6230B-46	-268	-	-
2-269	AN6230B-47	-269	-	-
2-270	AN6230B-48	-270	-	-
2-271	AN6230B-49	-271	-	-
2-272	AN6230B-50	-272	-	-
2-273	AN6230B-51	-273	-	-
2-274	AN6230B-52	-274	-	-
2-325	AN6227B-28	-325	R. 143	R-28
2-326	AN6227B-29	-326	R. 145	R-29
2-327	AN6227B-30	-327	R. 148	R-30
2-328	AN6227B-31	-328	R. 151	R-31
2-329	AN8227B-32	-329	R. 154	R-32
2-330	AN6227B-33	-330	R. 157	R-33

Parker no.	MIL-P-5516,Class B No.	B.S. 1806 No.	UK code no.	French code no.
2-331	AN6227B-34	-331	R. 160	R-34
2-332	AN6227B-35	-332	R. 163	R-35
2-333	AN6227B-36	-333	R. 166	R-36
2-334	AN6227B-37	-334	R. 169	R-37
2-335	AN6227B-38	-335	R. 172	R-38
2-336	AN6227B-39	-336	R. 175	R-39
2-337	AN6227B-40	-337	R. 179	R-40
2-338	AN6227B-41	-338	R. 180	R-41
2-339	AN6227B-42	-339	R. 182	R-42
2-340	AN6227B-43	-340	R. 183	R-43
2-341	AN6227B-44	-341	R. 184	R-44
2-342	AN8227B-45	-342	R. 186	R-45
2-343	AN6227B-46	-343	R. 187	R-46
2-344	AN6227B-47	-344	R. 188	R-47
2-345	AN6227B-48	-345	R. 190	R-48
2-346	AN6227B-49	-346	R. 191	R-49
2-347	AN6227B-5O	-347	R. 192	R-50
2-348	AN6227B-51	-348	R. 194	R-51
2-349	AN6227B-52	-349	R. 195	R-52
2-425	AN6227B-88	-425	R. 196	R-53
2-426	AN6227B-53	-426	R. 198	R-54
2-427	AN6227B-54	-427	R. 200	R-55
2-428	AN6227B-55	-428	R. 202	R-56
2-429	AN6227B-56	-429	R. 205	R-57
2-430	AN6227B-57	-430	R. 207	R-58
2-431	AN6227B-58	-431	R. 209	R-59
2-432	AN6227B-59	-432	R. 212	R-60
2-433	AN6227B-60	-433	R. 214	R-61
2-434	AN6227B-61	-434	R. 216	R-62
2-435	AN6227B-62	-435	R. 218	R-63
2-436	AN6227B-63	-436	R. 220	R-64
2-437	AN6227B-64	-437	R. 222	R-65
2-438	AN6227B-65	-438	R. 224	R-66
2-439	AN6227B-66	-439	R. 227	R-67
2-440	AN6227B-67	-440	R. 230	R-68
2-441	AN6227B-68	-441	R. 232	R-69
2-442	AN6227B-69	-442	R. 234	R-70
2-443	AN6227B-70	-443	R. 236	R-71
2-444	AN6227B-71	-444	R. 238	R-72
2-445	AN6227B-72	-445	R. 240	R-73
2-446	AN6227B-73	-446	R. 242	R-74
2-447	AN6227B-74	-447	R. 244	R-75
2-248	AN6227B-75	-248	R. 246	R-76
2-249	AN6227B-76	-249	R. 248	R-77
2-450	AN6227B-77	-450	R. 250	R-78
2-451	AN6227B-78	-451	R. 252	R-79

Tel: +45 63 12 83 00 | Email: ps@hymatik.com | www.hymatik.com | Hvidkaervej 27a, DK-5250 Odense SV, Denmark

11 Appendix

Parker no.	MIL-P-5516,Class B No.	B.S. 1806 No.	UK code no.	French code no.
2-452	AN6227B-79	-452	R. 254	R-80
2-453	AN6227B-80	-453	R. 256	R-81
2-454	AN6227B-81	-454	R. 257	R-82
2-455	AN6227B-82	-455	R. 258	R-83
2-456	AN6227B-83	-456	R. 259	R-84
2-457	AN6227B-84	-457	R. 260	R-85
2-458	AN6227B-85	-458	R. 261	R-86
2-459	AN6227B-86	-459	R. 262	R-87
2-460	AN6227B-87	-460	R. 263	R-88

Tab. 11.1 Cross-reference list – European O-Ring codes and sizes

Parker no.	UK code no.
5-052	R. 106[1)]
5-612	R. 108
2-110	R. 109[1)]
5-614	R. 112
5-613	R. 114
5-615	R. 115
5-616	R. 117
5-243	R. 119[1)]
5-617	R. 121
5-256	R. 123[1)]
2-117	R. 128
5-618	R. 134[1)]
5-321	R. 144
5-332	R. 147
5-035	R. 150[1)]
5-701	R. 153
5-037	R. 156[1)]
5-702	R. 162
5-039	R. 165[1)]
5-703	R. 168
5-361	R. 171[1)]
5-704	R. 174
5-705	R. 177
2-350	R. 199[1)]
2-351	R. 201[1)]
2-352	R. 203[1)]
2-353	R. 206[1)]
2-354	R. 208[1)]
2-355	R. 210[1)]
2-356	R. 213[1)]
2-357	R. 215[1)]
2-358	R. 217[1)]
2-359	R. 219[1)]
2-360	R. 221[1)]
5-064	R. 226[1)]
5-434	R. 233[1)]
5-445	R. 241[1)]
5-474	R. 253[1)]

Tab. 11.2 O-ring codes and sizes Parker no. and UK code no.

Parker no.	French code no.
5-578	R-1
5-579	R-2
5-580	R-3
5-581	R-4
5-582	R-5
5-583	R-5a
5-584	R-6
5-585	R-6a
5-586	R-7
5-587	R-8
5-588	R-9
5-589	R-10
5-590	R-11
5-591	R-12
5-592	R-13
5-593	R-14
5-594	R-15
5-595	R-16
5-596	R-17
5-597	R-18
5-598	R-19
5-599	R-20
5-600	R-21
5-601	R-22
5-602	R-23
5-603	R-24
5-604	R-25
5-605	R-26
5-606	R-27

[1)] These O-rings vary slightly in size, but this does not affect their use for most applications.

Tab. 11.3 O-ring codes and sizes Parker no. and French code no.

Tel: +45 63 12 83 00 | Email: ps@hymatik.com | www.hymatik.com | Hvidkaervej 27a, DK-5250 Odense SV, Denmark

11 Appendix

11.3 Media Compatibility Table

The recommendations concerning media resistance are based on currently available test and field experience data and are intended as proposals for technical solutions. Therefore, users must test and approve the suitability of the engineering designs under their specific operating conditions. Parker offers no general guarantee concerning the form, installation circumstances or function of a product in any application.

[1] Compatibility rating: 1 = satisfactory, 2 = fair, 3 = conditional, 4 = unsatisfactory, empty space = insufficient data

Compatitibility rating[1]	Parker compound	static and dynamic													static		
		HNBR	NBR	EPDM	FKM	FKM (HiFluor®)	FFKM (Parofluor®)	CR	SBR	ACM	TPU	IIR	BR	NR	CSM (Hypalon)	FVMQ	VMQ
A																	
Acetaldehyde	E0540-80	3	3	2	4	3	1	3	3	4	4	2	2	2	3	4	2
Acetamide	C0557-70	1	1	1	3	1	1	1	4	4	4	2	4	4	2	1	2
Acetic acid, glacial acetic acid (conc.)	E0540-80	3	3	1	4	1	1	4	3	4	4	3		3	4	1	1
Acetic acid, hot (high pressure)	V8920-75	4	4	3	4	1	1	4	4	4	4	4	4	4	3	4	3
Acetic anhydride	C0557-70	4	4	1	4	1	1	1	3	4	4	1		1	1	4	4
Acetoacetic ester	E0540-80	4	4	2	4	1	1	4	3	4	4	2	3	3	4	4	2
Acetone	E0540-80	4	4	1	4	2	1	4	4	4	4	1	4	4	3	4	4
Acetophenone	E0540-80	4	4	1	4	1	1	4	4	4	4	1		4	4	4	3
Acetyl chloride	V0747-75	4	4	4	1	1	1	4	4	4	4	4	4	4	4	1	3
Acetylacetone	E0540-80	4	4	1	4	2	1	4	4	4	4	1	4	4	4	4	4
Acetylene	E0540-80	1	1	1	1	1	1	2	2			1	2	2	2		2
Acrylonitrile	V3819-75	4	4	4	4	1	1	3	4	4	4	4		4	4	4	3
AdBlue®, an aqueous urea solution	E8867-60	1	3	1	4	4	1	4	4	4							
AdBlue®, an aqueous urea solution	N8907-75	1	3	1	4	4	1	4	4	4							
Adipic acid, aqueous	N0674-70	1	1	1	1	1	1	1	1	4	4	1		1	1	1	2
Aero Lubriplate®	N0674-70	1	1	4	1	1	1	1	2	1	1	4	4	4	1	1	2
Aero Shell 17 lubricant	N0674-70	1	1	4	1	1	1	2	4	1	1	4	4	4	1	1	2
Aero Shell 750	V0747-75	2	2	4	1	1	1	4	4	2	4	4	4	4	4	2	4
Aero Shell 7A lubricant	N0674-70	1	1	4	1	1	1	2	4	1	1	4	4	4	1	1	2
Aero Shell Fluid 4 (41)	N0756-75	1	1	4	1	1	1	4	4	2	2	4	4	4	2	1	4
Aero Shell IAC	N0674-70	1	1	4	1	1	1	2	4	1	1	4	4	4	1	1	2
Aerosafe 2300	E0540-80	4	4	1	4	1	1	4	4	4	4	2	4	4	4	3	3
Aerosafe 2300W	E0540-80	4	4	1	4	1	1	4	4	4	4	2	4	4	4	3	3
Aerozine 50 (50 % hydrazine, 50 % UDMH)	E0540-80	3	3	1	4	1	1	4	4		4	1	4	4	4	4	4
Air (long-term weathering)	E0540-80	3	3	1	1	1	1	1	3	1	3	1		3	1	1	1
Air, 260 °C	S0604-70	4	4	4	3	1	1	4	4	4	4	4	4	4	4	4	2
Air, oil-free, 100 °C	E0540-80	1	1	1	1	1	1	1	2	1	2	1	2	2	1	1	1
Air, oil-free, 150 °C	S0604-70	2	2	2	1	1	1	2	4	2	3	2	4	4	2	1	1
Air, oil-free, 200 °C	S0604-70	4	4	4	1	1	1	4	4	4	4	4	4	4	4	2	1
Aldehyde, butanal	V8920-75	4	4	3	4		1	4	4	4	4	4	4	4		4	4
Alkazene (R) (Dibromethylbenzene)	V0747-75	4	4	4	2	1	1	4	4	4	4	4	4	4	4	2	4
Aluminum acetate, aqueous	E0540-80	1	1	1	4	1	1	1	3	4	4	1		1	3	4	4
Aluminum bromide	N0674-70	1	1	1	1	1	1	1	1	1	3	1	1	1	1	1	1
Aluminum chloride, aqueous	N0674-70	1	1	1	1	1	1	1	1	4	4	1		1	1	1	1
Aluminum fluoride, aqueous	N0674-70	1	1	1	1	1	1	1	1	4	4	1		1	1	1	1

Tel: +45 63 12 83 00 | Email: ps@hymatik.com | www.hymatik.com | Hvidkaervej 27a, DK-5250 Odense SV, Denmark

11 Appendix

Compatitibility rating[1)]	Parker compound	static and dynamic													static		
		HNBR	NBR	EPDM	FKM	FKM (HiFluor®)	FFKM (Parofluor®)	CR	SBR	ACM	TPU	IIR	BR	NR	CSM (Hypalon)	FVMQ	VMQ
Aluminum nitrate, aqueous	N0674-70	1	1	1	1	1	1	1	1	4	4	1		1	1	1	1
Aluminum phosphate, aqueous	N0674-70	1	1	1	1	1	1	1	1	4	4	1		1	1	1	1
Aluminum sulfate	N0674-70	1	1	1	1	1	1	1	2	4	4	1	1	1	1		1
Alums	N0674-70	1	1	1	1	1	1	1	1	4		1	1	1	1		1
Ambrex 33 (mobile)	N0674-70	1	1	4	1	1	1	2	4	1	2	4	4	4	3	3	4
Ambrex 830 (mobile)	N0674-70	1	1	3	1	1	1	2	4	1	1	3	4	4	2	1	2
Amine mixture	C0557-70	4	4	2	4	2	1	2	2	4	4	2	2	2	4	4	2
Ammonia, gas, cold	C0557-70	1	1	1	4	3	1	1	1	4	4	1		1	1	4	1
Ammonia, gas, hot	C0557-70	1	4	1	4	4	1	1	4	4	4	4		4	3	4	2
Ammonia, liquid, anhydrous	C0557-70	1	2	1	4	3	1	1	4	4	4	1	4	4	4	4	2
Ammonium carbonate, aqueous	C0557-70	2	2	1	3	1	1	1	1	4	4	1		1	1	2	2
Ammonium chloride	E0540-80	1	1	1	1	1	1	1	1	1	1	1	1	1	1	1	2
Ammonium chloride, 2 molar solution	N0674-70	1	1	1		1	1	1	1			1		1	1		
Ammonium chloride, aqueous	N0674-70	1	1	1	3	1	1	1	1	4	4	1		1	1	2	2
Ammonium hydroxide, 3 molar solution	E0540-80	1	1	1	2	1	1	1	2	4	4	1	2	2	1	1	1
Ammonium hydroxide, concentrated	E0540-80	4	4	1	3	2	1	1	3	4	4	1	3	3	1	1	1
Ammonium nitrate	N0674-70	1	1	1		1	1	1	1	4		1			1		
Ammonium nitrate, 2 mol solution	N0674-70	1	1	1		1	1	1	1	4		1			1		
Ammonium persulfate	E0540-80	4	4	1		1	1	1	4	4	4	1		4			
Ammonium persulfate solution	E0540-80	4	4	1		1	1		4	4	4	1		1			
Ammonium persulfate, aqueous	E0540-80	4	4	1	3	1	1	1	4	4	4	1		4	1	1	1
Ammonium phosphate	N0674-70	1	1	1		1	1	1	1			1		1	1		1
Ammonium phosphate, primary	N0674-70	1	1	1		1	1	1	1			1		1	1		1
Ammonium salts	N0674-70	1	1	1	3	1	1	1	1	3		1		1	1	3	1
Ammonium sulfate	N0674-70	1	1	1	4	1	1	1	2	4		1	1	1	1		
Ammonium sulfide	N0674-70	1	1	1	4	1	1	1	2	4		1	1	1	1		
Amyl Acetate	E0540-80	4	4	1	4	1	1	4	4	4	4	1		3	4	4	4
Amyl alcohol	E0540-80	3	3	1	1	1	1	1	1	4	4	1		1	1	1	3
Amyl borate	N0674-70	1	1	4		1	1	1	4			4	4	4			
Amyl chloride	V0747-75	4	4	4	1	1	1	4	4	4	4	4		4	4	3	4
Amyl chloronaphthalene	V0747-75	4	4	4	1	1	1	4	4	4		4	4	4	4		
Amyl naphthalene	V0747-75	4	4	4	1	1	1	4	4			4	4	4	4	1	4
Anderol, L774 (Di-Ester)	V0747-75	2	2	4	1	1	1	4	4	2	4	4	4	4	4	2	4
Anderol, L826	V0747-75	2	2	4	1	1	1	4	4	2	4	4	4	4	4	2	4
Anderol, L829	V0747-75	2	2	4	1	1	1	4	4	2	4	4	4	4	4	2	2
Ang-25 (Di-Ester base) (TG 749)	V0747-75	2	2	4	1	1	1	4	4	2	4	4	4	4	4	2	2
Ang-25 (glycerol ester)	E0540-80	2	2	1	1	1	1	2	2	4	4	2	2	2	2	2	2
Aniline dyes	E0540-80	4	4	2	2	1	1	2	2	4	4	2	2	2	2	2	3
Aniline hydrochloride	E0540-80	2	2	2	2	1	1	4	3	4	4	2	4	2	4	2	3
Aniline oil (aniline)	E0540-80	4	4	1	1	1	1	4	3	4	4	1		3	4	1	1
Animal oil	N0674-70	1	1	2	1	1	1	2	4	1	2	2	4	4	2	1	2
AN-O-366	N0674-70	1	1	4	1	1	1	2	4	1	1	4	4	4	2	1	4
Ansul ether 161 or 181	V3819-75	3	3	3	4	1	1	4	4	4	2	3	4	4	4	3	4
AN-W-O-366b hydraulic fluid	N0674-70	1	1	4	1	1	1	2	4	2	2	4	4	4	2	1	4

Tel: +45 63 12 83 00 | Email: ps@hymatik.com | www.hymatik.com | Hvidkaervej 27a, DK-5250 Odense SV, Denmark

11 Appendix

Compatitibility rating[1)]	Parker compound	static and dynamic													static		
		HNBR	NBR	EPDM	FKM	FKM (HiFluor®)	FFKM (Parofluor®)	CR	SBR	ACM	TPU	IIR	BR	NR	CSM (Hypalon)	FVMQ	VMQ
aqua regia	V3819-75	4	4	4	3	2	2	4	4	4	4	4		4	4	4	4
argon	N0674-70	1	1	1	1	1	1	1	1	1	1	1	1	1	1	1	1
Aroclor, 1248	V0747-75	3	3	2	1	1	1	4	4	4		2	4	4	4	2	2
Aroclor, 1254	V0747-75	4	4	2	1	1	1	4	4	4		4	4	4	4	2	3
Aroclor, 1260	V0747-75	1	1		1	1	1	1	1	4		1	1	1	1	1	1
Aromatic fuels 50 % (fuel C)	V0747-75	2	2	4	1	1	1	4	4	4	4	4	4	4	4	2	4
Arsenic acid (arsenic trichloride), aqueous	E0540-80	1	1	1	1	1	1	1	1	4	4	1		1	1	1	1
Ascorbic acid	V3819-75					1	1										
Askarels (e.g. clophen, PCB, aroclor, nepolin)	V0747-75	2	2	4	1	1	1	4	4	4	4	4	4	4	4	2	4
Asphalt	V0747-75	2	2	4	1	1	1	2	4	2	2	4	4	4	4	2	4
ASTM oil no. 1	N0674-70	1	1	4	1	1	1	1	4	1	3	4		4	1	1	1
ASTM oil no. 2	N0674-70	1	1	4	1	1	1	4	4	1	3	4		4	4	1	3
ASTM oil no. 3	N0674-70	1	1	4	1	1	1	4	4	1	3	4		4	4	1	4
ASTM oil no. 4	V0747-75	2	2	4	1	1	1	4	4	2	4	4	4	4	4	2	4
ASTM reference fuel A	N0674-70	1	1	4	1	1	1	3	4	1	1	4		4	3	1	4
ASTM reference fuel B	N0674-70	2	1	4	1	1	1	4	4	4	3	4		4	4	1	4
ASTM reference fuel C	V0747-75	4	4	4	1	1	1	4	4	4	4	4		4	4	1	4
ATF oil	A8845-70	1	2	4	1	1	1		4	1		4	4	4			
ATF oil	AE607-60	1	2	4	1	1	1		4	1		4	4	4			
ATF oil	AE608-70	1	2	4	1	1	1		4	1		4	4	4			
ATF oil	N0674-70	1	1	4	1	1	1	2	4	1	2	4	4	4	3		4
ATL-857	V0747-75	2	2	4	1	1	1	4	4	2	4	4	4	4	4	2	4
Atlantic dominion F	N0674-70	1	1	4	1	1	1	4	4	1	2	4	4	4	4	1	4
Aurex 903R (mobile)	N0304-75	1	1	4	1	1	1	2	4	1	1	4	4	2	4	4	4
B																	
Bacon, animal fat (see animal oil)	N0674-70	1	1	2	1	1	1	2	4	1	1	2	4	4	4	1	2
Bardol B	V0747-75	4	4	4	1	1	1	4	4	4	4	4	4	4	4	2	4
Barium chloride, aqueous	N0674-70	1	1	1	1	1	1	1	1	4	4	1		1	1	1	1
Barium hydroxide, aqueous	N0674-70	1	1	1	1	1	1	1	1	4	4	1		1	1	1	1
Barium salts	N0674-70	1	1	1	1	1	1	1	1	1	1	1	1	1	1	1	1
Barium sulfide	N0674-70	1	1	1	1	1	1	1	2	4	1	1	2	1	1	1	1
Bayol 35	N0674-70	1	1	4	1	1	1	2	4	1	2	4	4	4	4	1	4
Bayol D	N0674-70	1	1	4	1	1	1	2	4	1	4	4	4	4	4	1	4
Beer	E8743-70	1	1	1	1	1	1	1	1	4	4	1		1	1	1	1
Beet juice	N0674-70	1	1	1	1	1	1	1	1	4	4	1		1	1	1	1
Benzaldehyde (bitter almond oil)	E0540-80	4	4	1	4	1	1	4	4	4	4	1		4	4	3	1
Benzene	V0747-75	4	4	4	1	1	1	4	4	4	4	4		4	4	1	4
Benzenesulfonic acid, 10 %	V0747-75				1	1	1	1							1	3	
Benzine	N0674-70	1	1	4	1	1	1	2	4	1	2	4	4	4	3	1	4
Benzoate (benzyl benzoate)	V0747-75	4	4	4	1	1	1	4	4	4	4	2	4	4	4	1	
Benzoic acid, acqueous	V0747-75	4	4	4	1	1	1	4	4	4	4	4		4	4	1	4
Benzophenone	V0747-75			3	1	1	1		4	4	4	3		4		1	
Benzoyl benzoate (Benzoate)	V0747-75	4	4	2	1	1	1	4	4	4		2	4	4	4	1	
Benzoyl chloride	V0747-75	4	4	1	1	1	1	4	4	4		2	4	4	4	1	

Tel: +45 63 12 83 00 | Email: ps@hymatik.com | www.hymatik.com | Hvidkaervej 27a, DK-5250 Odense SV, Denmark

11 Appendix

Compatitibility rating[1)]	Parker compound	static and dynamic													static		
		HNBR	NBR	EPDM	FKM	FKM (HiFluor®)	FFKM (Parofluor®)	CR	SBR	ACM	TPU	IIR	BR	NR	CSM (Hypalon)	FVMQ	VMQ
Benzyl alcohol	V0747-75	4	4	1	1	1	1	3	2	4	4	1		2	3	1	1
Benzyl chloride	V0747-75	4	4	4	1	1	1	4	4	4	4	4		4	4	1	4
Bisulfate lye	E0540-80	3	3	1	1	1	1	1	3	4	4	1		3	1	2	2
Black lye	V3738-75	2	2	2	1	1	1	2	2	4	4	2	2	2	2	2	2
Black point 77	N0674-70	1	1	1	1	1	1	3	3	3	3	1	3	3	3	3	3
Blast furnace gas	V0747-75	4	4	4	1	1	1	4	4	4	4	4		4	4	3	3
Bleach of lime	N0674-70	1	1	1	1	1	1	2	1	4		1	2	1	2	1	2
Bleaching lye	V0747-75	4	4	1	1	1	1	4	4			1		4	1	2	2
BlowBy condensate / acetic acid (Ph1, Ph2, Ph3, Ph9)	V8722-75	2	2	4	1	1	1					4	4	4			
BlowBy condensate / acetic acid (Ph1, Ph2, Ph3, Ph9)	V8855-60	2	2	4	1	1	1					4	4	4			
BlowBy condensate / acetic acid (Ph1, Ph2, Ph3, Ph9)	V8892-70	2	2	4	1	1	1					4	4	4			
Borax	E0540-80	2	2	1	1	1	1	4	2	2	1	1	2	2	4	2	2
Borax, aqueous	N0674-70	1	1	1	1	1	1	1	1	4	4	1		1	1	1	1
Bordeaux mixture	E0540-80	2	2	1	1	1	1	2	2	4	4	1	2	2	1	2	2
Bordeaux mixture	E0540-80	2	2	1	1	1	1	2	2	4	4	1	2	2	1	2	2
Boric acid, 10 %	N0674-70	1	1	1	1	1	1	1	1	4	4	1		1	1	1	3
Boron fluid (HEF)	V0747-75	2	2	4	1	1	1	4	4	4	4	4	4	4	4	2	4
brake fluid	E0540-80	3	3	1	4	1	1	2	1			2			2	4	3
Brake fluid (glycol)	E0540-80	2	3	1	4	1	1	3	1	4	4	1		1	3	4	3
Brandy, fruit water	N8551-75	1	1	1	1	1	1	1	1	4	4	1		1	1	1	1
Bray GG-130	V0747-75	2	2	4	1	1	1	4	4	2	4	4	4	4	4	2	4
Brayco 719-R (W-H-910)	E0540-80	3	3	1	4	1	1	2		4	4	2	2	2	2	2	2
Brayco 885 (MIL-L-6085A)	V0747-75	2	2	4	1	1	1	4	4	2	1	4	4	4	4	2	4
Brayco 910	E0540-80	2	2	1	4			2	2	3	3	1	1	1	1	4	4
Bret 710	E0540-80	2	2	1	4	1	1	2	2	3	3	1	1	1	1	4	4
Bromine water, saturated	V0747-75	4	4	3	1	1	1	4	4	4	4	4		4	4	3	4
Bromine, liquid	V0747-75	4	4	4	1	1	1	4	4	4	4	4		4	4	3	4
Bromobenzene	V0747-75	4	4	4	1	1	1	4	4	4	4	4	4	4	4	2	4
Bromochloromethane	V0747-75	4	4	2	1	1	1	4	4	4	4	2	4	4	4	2	4
Bromochlorotrifluoroethane	V0747-75	4	4	4	1	1	1	4	4	4	4	4	4	4	4	2	4
Bunker oil (for bunker oil C: FKM)	N0674-70	1	1	4	1	1	1	4	4	1	3	4		4	4	1	3
Butadiene (monomer)	V0747-75	4	4	4	1	1	1	4	4	4	4	4	4		4	1	4
Butane, 2.2-Dimethyl-	N0674-70	1	1	4	1	1	1	2	3	1	4	4	4	4	2	1	4
Butane, butane gas	N0674-70	1	1	4	1	1	1	1	4	1	1	4		4	3	1	4
Butanol (methyl ethyl ketone, MEK)	E0540-80	4	4	1	4	1	1	4	4	4	4	1	4	4	4	4	4
Butanol (N-butyl alcohol)	N0674-70	1	1	2	1	1	1	1	1	4	4	2		1	1	2	4
Butter	N8551-75	1	1	4	1	1	1	4	4	4	4	4		4	4	1	1
Butyl acetate	E0540-80	4	4	1	4	1	1	4	4	4	4	1		4	4	4	4
Butyl acetyl rizinoleate	E0540-80	3	3	1	1	1	1	3	4			1				3	
Butyl acrylate	V3819-75	4	4	4	4	1	1	4	4	4		4	4	4	4	4	
Butyl alcohol (butanol)	N0674-70	1	1	2	1	1	1	1	1	4	4	2	1	1	1	1	2
Butyl catechol	V0747-75	4	4	2	1	1	1	2	2	4		2	2	4	2	1	
Butyl glycol	E0540-80	3	3	2	4	1	1	3	4	4	4	2	4	4	4	4	
Butyl glycol adipate	E0540-80	4	4	2	2	1	1	4	4	4	4	2	4	4	4	2	2

Tel: +45 63 12 83 00 | Email: ps@hymatik.com | www.hymatik.com | Hvidkaervej 27a, DK-5250 Odense SV, Denmark

11 Appendix

Compatitibility rating[1)]	Parker compound	static and dynamic													static		
		HNBR	NBR	EPDM	FKM	FKM (HiFluor®)	FFKM (Parofluor®)	CR	SBR	ACM	TPU	IIR	BR	NR	CSM (Hypalon)	FVMQ	VMQ
Butyl mercaptan	V0747-75	4	4	4	1	1	1	4	4	4		4	4	4	4		4
Butyl stearate	V0747-75	2	2	4	1	1	1	4	4			4	4	4	4	2	
Butylamine	S0604-70	3	3	4	4		1	4	4	4	4	4	4	4	4	4	2
Butylcarbitol	E0540-80	4	4	1	3	1	1	3	4	4		1	4	4	4	4	4
Butylcellosolve adipates	E0540-80	4	4	2	2	1	1	4	4	4	4	2	4	4	4	2	2
Butylene (butene)	V0747-75	2	2	4	1	1	1	4	4	4	4	4		4	4	2	4
Butyloleate	V0747-75	4	4	2	1	1	1	4	4			2	4		4	2	
Butyraldehyde	E0540-80	4	4	1	4	1	1	4	4	4	4	1		4	4	4	4
Butyrate	E0540-80	4	4	1	1	1	1	4	4	4		1	4	4	4	1	
Butyric acid	V0747-75	4	4	2	2	1	1	4	4	4		2	4		4		
C																	
Calcium acetate, aqueous	E0540-80	1	1	1	4	1	1	1	1	4	4	1		1	1	4	1
Calcium bisulfite	N0674-70	1	1	4	1	1	1	1	4	4	1	4	4	4	1	1	1
Calcium carbonate	N0674-70	1	1	1	1	1	1	1	1	3	3	1	1	1	1	1	1
Calcium chloride, aqueous	N0674-70	1	1	1	1	1	1	1	1	4	4	1		1	1	1	1
Calcium cyanide	N0674-70	1	1	1		1	1	1	1			1	1	1	1		1
Calcium hydroxide, aqueous	N0674-70	1	1	1	3	1	1	2	1	4	4	1		1	1	1	1
Calcium hypochloride	E0540-80	4	4	1	1	1	1	4	4	4	4	1	4	4	1	1	
Calcium hypochlorite	E0540-80	2	2	1	1	1	1	2	2	4	4	1	2	2	1	2	2
Calcium hypochlorite, 15 %	E0540-80	4	4	1	1	1	1	3		4	4	1		1	1	4	4
Calcium nitrate (nitrate of lime)	N0674-70	1	1	1	1	1	1	1	1	1	1	1	1	1	1	1	2
Calcium phosphate, aqueous	N0674-70	1	1	1	1	1	1	1	1	4	4	1		1	1	1	1
Calcium salts	N0674-70	1	1	1	1	1	1	1	1	1	1	1	1	1	1	1	2
Calcium silicate	N0674-70	1	1	1	1	1	1	1	1			1	1	1	1		
Calcium sulfide	N0674-70	1	1	1	1	1	1	1	2	4	1	1	2	2	1	1	1
Calcium sulfite	N0674-70	1	1	1	1	1	1	1	2	4	1	1	2	2	1	1	1
Calcium thiosulfate	E0540-80	2	2	1	1	1	1	1	2	4	1	1	2	2	1	1	1
Calciumacetate	E0540-80	2	2	1	4	1	1	2	4	4	4	1	4	1	4	4	4
Calgon (sodium metaphosphate)	N0674-70	1	1	1	1	1	1	2	1			1	1	1	2	1	
Caliche solution (chile saltpeter)	N0674-70	1	1	1	1	1	1	1	1	1	1	1	1	1	1	1	2
Camphor oil	N0674-70	1	1	4	1	1	1	4	4	4	4	4		4	4	4	4
Caprylaldehyde (hexanal)	E0540-80			2	4	1	1			4	4	2	2	2		4	2
Carbamates	V3819-75			2	2	1	1	2	4	4	4	2	4	4	2	1	
Carbitol (diethylene glycol monoethyl ether)	E0540-80	2	2	2	2	1	1	2	2	4	4	2	2	2	2	2	2
Carbolic acid (phenol)	V0747-75	4	4	3	1	1	1	4	4			3		4	4	1	4
Carbon dioxide refrigerant (PAG oil)	E8901-70	1	2	1	1	1	1										
Carbon dioxide refrigerant (POE & PAO oil)	N3554-75	1	2	4	1	1	1										
Carbon dioxide refrigerant (POE & PAO oil)	N8822-75	1	2	4	1	1	1										
Carbon dioxide, dry	N0552-90	1	1	1	1	1	1	1	1	1	1	1		1	1	1	1
Carbon dioxide, wet	N0552-90	1	1	1	1	1	1	1	1	4	4	1		1	1	1	1
Carbon disulfide	V0747-75	4	4	4	1	1	1	4	4	4	4	4		4	4	1	4
Carbon monoxide, dry	N0552-90	1	1	1	1	1	1	1	1	1	1	1		1	1	1	1
Carbon tetrachloride	V0747-75	4	4	4	1	1	1	4	4	4	4	4		4	4	1	4
Carbonic acid, carbon dioxide	E0540-80	1	1	1	1	1	1	1	1	4	4	1		1	1	1	1

Tel: +45 63 12 83 00 | Email: ps@hymatik.com | www.hymatik.com | Hvidkaervej 27a, DK-5250 Odense SV, Denmark

11 Appendix

Compatitibility rating[1)]	Parker compound	static and dynamic													static		
		HNBR	NBR	EPDM	FKM	FKM (HiFluor®)	FFKM (Parofluor®)	CR	SBR	ACM	TPU	IIR	BR	NR	CSM (Hypalon)	FVMQ	VMQ
Castor oil	N0674-70	1	1	2	1	1	1	1	1	1	1	2	1	1	1	1	1
Caustic soda solution, lye	E0540-80	2	2	1	2	1	1	2	2	4	4	1	2	1	1	2	2
Cellosolve acetate	E0540-80	4	4	2	4	1	1	4	4	4	4	2	4	4	4	4	4
Cellosolve, butyl	E0540-80	4	4	2	4	1	1	4	4	4	4	2	4	4	4	4	4
Cellosolve® (ethylene glycol ethyl ether)	E0540-80	4	4	2	4	1	1	4	4	4	4	2	4	4	4	4	4
Celluguard	N0674-70	1	1	1	1	1	1	1	1	3	4	1	1	1	1	1	1
Cellulube 90, 100, 150, 220, 300, 500	E0540-80	4	4	1	1	1	1	4	4	4	4	1	4	4	4	2	1
Cellulube A60 (now: Fyrquel)	E0540-80	4	4	2	4	1	1	4	4	4	4	2	4	4	4	4	
Cellutherm 2505A	V0747-75	2	2	4	1	1	1	4	4	2	4	4	4	4	4	2	4
Cetane (hexadecane)	N0674-70	1	1	4	1	1	1	2	4	1	4	4	4	4	2	3	4
Cheese spread, 60 % fat, dry	N8551-75	1	1	1	1	1	1										1
Chlorax	V0747-75	2	2	2	1	1	1	2	4	4	4	2	4	4	2	1	
Chlordane	V0747-75	2	2	4	1	1	1	3	4			4	4	4	3	2	4
Chlorextol	V0747-75	2	2	4	1	1	1	2	4	2	4	4	4	4	4	2	4
Chlorinated (salty) sea water	V0747-75	4	4	4	1	1	1	4	4	4	4	4	2	2	2	1	4
Chlorinated solvents, dry	V0747-75	4	4	4	1	1	1	4	4	4	4	4	4	4	4	1	4
Chlorinated solvents, wet	V0747-75	4	4	4	1	1	1	4	4	4	4	4	4	4	4	1	4
Chlorine dioxide	V0747-75	4	4	4	1	1	1	4	4	4	4	4		4	4	3	4
Chlorine dioxide, 8 % Cl as NaClO2 in solution	V0747-75	4	4	4	1	1	1	4	4	4	4	4	4	4	4	2	
Chlorine gas, dry	V0747-75	4	4	3	1	1	1	4	4	4	4	3		4	4	2	4
Chlorine gas, wet	V0747-75	4	4	3	1	1	1	4	4	4	4	3		4	4	3	4
Chlorine sulfur	V0747-75	4	4	4	1	1	1	4	4	4		4	4	4	4	1	3
Chloroacetic acid	E0540-80	4	4	2	4	2	1	4	4	4	4	2	4	4	4	4	4
Chloroacetone	E0540-80	4	4	1	4	1	1	3				3		3	3	4	
Chlorobenzene (monochlorobenzene)	V0747-75	4	4	4	1	1	1	4	4	4	4	4		4	4	4	4
Chlorobromomethane	V0747-75	4	4	2	1	1	1	4	4	4	4	2	4	4	4	2	4
Chlorobutadiene (chloroprene)	V0747-75	4	4	4	1	1	1	4	4			4		4		3	
Chlorodecane	V0747-75	4	4	4	1	1	1	4	4	4	4	4	4	4	4	1	4
Chlorododecane	V0747-75	4	4	4	1	1	1	4	4	4	4	4	4	4	4	1	4
Chloroethylacetate	V0747-75	4	4	4	1	1	1	4	4	4	4	4	4	4	4	2	4
Chloroform (trichloromethane)	V0747-75	4	4	4	1	1	1	4	4	4	4	4		4	4	3	4
Chloronaphthalene	V0747-75	4	4	4	1	1	1	4	4			4		4		3	4
Chlorophenol (o-chlorophenol)	V0747-75	4	4	4	1	1	1	4	4	4	4	4		4	4	3	4
Chlorosulfonic acid, 10 %	V3819-75	4	4	4	4	1	1	4	4	4	4	4		4	4	4	4
Chlorotoluene	V0747-75	4	4	4	1	1	1	4	4	4	4	4		4	4	3	4
Chlorox	V0747-75	2	2	2	1	1	1	2	4	4	4	2	4	4	2	1	
Chromic acid, 50 %	V3738-75	4	4	2	1	1	1	4	4	4	4	3	4	4	2	3	3
Chromium alum	N0674-70	1	1	1	1	1	1	1	1	4		1	1	1	1		1
Chromium baths (electroplating)	V0747-75	4	4	4	1	1	1	4	4		4	4		4	3	3	3
Chromium oxide 88 wt % aqueous solution	V3738-75	4	4	2	1	1	1	4	4	4	4	2	4	4	1	2	2
Circo Light Process Oil	N0674-70	1	1	4	1	1	1	2	4	1	1	4	4	4	2	1	4
Citric acid , aqueous	C0557-70	1	1	1	1	1	1	1	1	4	4	1		1	1	1	1
City Service cool motor aplar, oil 140-E.P. lube	N0674-70	1	1	4	1	1	1	2	4	1	1	4	4	4	2	1	4
City Service No. 65, 120, 250	N0674-70	1	1	4	1	1	1	2	4	1	2	4	4	4	4	1	4

Tel: +45 63 12 83 00 | Email: ps@hymatik.com | www.hymatik.com | Hvidkaervej 27a, DK-5250 Odense SV, Denmark

11 Appendix

Compatitibility rating[1)]	Parker compound	static and dynamic													static		
		HNBR	NBR	EPDM	FKM	FKM (HiFluor®)	FFKM (Parofluor®)	CR	SBR	ACM	TPU	IIR	BR	NR	CSM (Hypalon)	FVMQ	VMQ
City Service Pacemaker No. 2	N0674-70	1	1	4	1	1	1	2	4	1	2	4	4	4	4	1	4
CNG (Compressed Natural Gas)	N3987-70	1	2	4	1	1	1	3	4	3	3	4		4	3	3	4
CNG (Compressed Natural Gas)	N8888-70	1	2	4	1	1	1	3	4	3	3	4		4	3	3	4
CNG (Compressed Natural Gas)	V8802-80	1	2	4	1	1	1	3	4	3	3	4		4	3	3	4
CNG (Compressed Natural Gas)	V8877-75	1	2	4	1	1	1	3	4	3	3	4		4	3	3	4
Cobalt chloride, 2n	N0674-70	1	1	1	1	1	1	1	1	4	4	1	1	1	1	1	1
Cobalt chloride, aqueous	N0674-70	1	1	1	1	1	1	1	1	4	4	1		1	1	1	1
Coconut oil	N8551-75	1	1	4	1	1	1										1
Cod liver oil	N8551-75	1	1	4	1	1	1	1	4	1	1	4		4	1	1	1
Coffee	N3824-70	1	1	1	1	1	1	1	1	4	4	1		3	1	1	1
Coke oven gas	V0747-75				1	1	1		4					4		3	3
Cola essence (Coca Cola)	E8743-70	3	3	1	4	1	1									2	1
Colamine (ethanolamine)	E0540-80	4	4	2	4	3	1	4	2	4	4	2	2	2	4	4	2
Compressed air supply	N0674-70	1	1	4	1	1	1	1	4	4	1	1	4	4	1	4	4
Convelex 10	V3819-75	4	4			1	1	4	4		2	4	4	4	4		4
Coolanol (Monsanto), silicone oil	V0747-75	1	1	4	1	1	1	1	4	4	4	4	4	4	2	2	4
Coolanol 45 (Monsanto)	V0747-75	1	1	4	1	1	1	1	4	4	4	4	4	4	2	2	4
Copper acetate, aqueous	E0540-80	3	3	1	4	1	1	3	4	4	4	1		3	3	4	4
Copper chloride, aqueous	N0674-70	1	1	1	1	1	1	1	1	4	4	1		1	1	1	1
Copper cyanide	N0674-70	1	1	1	1	1	1	1	1	1	1	1	1	1	1	1	1
Copper salts	N0674-70	1	1	1	1	1	1	1	1	1	1	1	1	1	1	1	1
Copper sulfate, aqueous	N0674-70	1	1	1	1	1	1	1	1	4	4	1		1	1	1	1
Corn oil	N8551-75	1	1	4	1	1	1	3	4	1	2	4		4	3	1	1
Cottonseed oil	N0674-70	1	1	3	1	1	1	4	4	1	2	1		4	4		4
Creosol (methyl catechol)	V0747-75	4	4	4	1	1	1	4	4	4	4	4	4	4	4	2	4
Creosote (wood tar extract)	N0674-70	1	1	4	1	1	1	2	4	1	3	4	4	4	4	1	4
Cumene (isopropylbenzene)	V0747-75	4	4	4	1	1	1	4	4	4	4	4		4	4	3	4
Cutting fat	N0674-70	1	1	4	1	1	1	2	4	1	1	4	4	4	2	1	4
Cyclohexane	N0674-70	1	1	4	1	1	1	4	4	1	1	4		4	4	1	4
Cyclohexanol	N0674-70	1	1	4	1	1	1	2	4			4	4	4	2	1	4
Cyclohexanone	E0540-80	4	4	2	4	1	1	4	4	4	4	2	4	4	4	4	4
D																	
Decalin (white spirit)	V0747-75	4	4	4	1	1	1	4	4			4	4	4	4	1	4
Decane	N0674-70	1	1	4	1	1	1	3	4	1	2	4	4	4	3	1	2
Delco brake fluid	E0540-80	3	3	1	4	1	1	2	1			2			2	4	3
Denatured alcohol	E0540-80	1	1	1	1	1	1	1	1	4	4	1	1	1	1	1	1
Detergent dissolved in water	N0674-70	1	1	1	1	1	1	2	2	4	4	1	2	2	2	1	1
Developing tray (photo)	N0674-70	1	1	2	1	1	1	1	2			2	2	1	1	1	
Dexron (ATF oil)	N0674-70	1	1	4	1	1	1	2	4	1	2	4	4	4	4	2	4
Dextron	N0674-70	1	1	4	1	1	1	2	4	1	2	4	4	4	4	2	4
Diacetone (diacetone alcohol)	E0540-80	4	4	1	4	1	1	4	4	4	4	1	4	4	4	4	4
Diazinon (insecticide)	V0747-75	3	3	4	2	1	1	3	4			4	4	4	3	2	4
Dibenzyl sebacate	V0747-75	4	4	2	2	1	1	4	4	4	2	2	4	4	4	3	3
Dibromodifluoromethane	E0540-80	4	4	2		1	1	4	4	4	4	2	4	4	4		4

Tel: +45 63 12 83 00 | Email: ps@hymatik.com | www.hymatik.com | Hvidkaervej 27a, DK-5250 Odense SV, Denmark

11 Appendix

Compatitibility rating[1)]	Parker compound	static and dynamic													static		
		HNBR	NBR	EPDM	FKM	FKM (HiFluor®)	FFKM (Parofluor®)	CR	SBR	ACM	TPU	IIR	BR	NR	CSM (Hypalon)	FVMQ	VMQ
Dibromoethyl benzene	V0747-75	4	4	4	1	1	1	4	4	4	4	4	4	4	4	2	4
Dibutyl amine	V8920-75	4	4	4	4	2	2	3	4	4	4	4	4	4	4	4	4
Dibutyl ether	V3819-75	4	4	3	3	1	1	4	4	3	2	3	4	4	4	3	4
Dibutyl sebacate	V0747-75	4	4	3	2	1	1	4	4	4	4	2	4	4	4	2	2
Dibutylphthalate (Palatinol C)	E0540-80	4	4	2	4	1	1	4	4	4	4	3		4	4	3	
Dichloro methan (dichloromethylen chloride)	V0747-75	4	4	4	2	1	1	4	4	4	4	4	4	4	4	2	4
Dichlorobenzene (ortho-dichlorobenzene)	V0747-75	4	4	4	1	1	1	4	4	4	4	4		4	4	1	4
Dichlorobenzene (para-dichlorobenzene)	V0747-75	4	4	4	1	1	1	4	4	4	4	4	4	4	4	2	4
Dichlorobutane (tetramethyl chloride)	V0747-75	2	2	4	1	1	1	4	4	4	4	4	4	4	4	2	4
Dichloroisopropyl ether	V3819-75	4	4	3	3	1	1	4	4	3	2	4	4	4	4	3	4
Dicyclohexylamine	V8920-75	3	3	4	4			4	4	4	4	4		4	4	4	4
Diesel fuel	V0747-75	1	1	4	1	1	1	4	4	1	3	4		4	4	1	4
Diester synth. lubricant (MIL-L-7808)	V0747-75	2	2	4	1	1	1	4	4	2	4	4	4	4	4	2	4
Diethyl amine	E0540-80	4	4	3	4	1	1	4	3	4	4	3		3	4	4	3
Diethyl glycol	E0540-80	1	1	1	1	1	1	1	1	4	4	1	1	1	1	1	2
Diethyl sebacate	V0747-75	4	4	1	1	1	1	4	4	4	1	1		4	4	4	4
Difluorodibromo methane	E0540-80	4	4	2				4	4	4	4	2	4	4	4		4
Diisobutyl ketone	E0540-80	4	4	1	4	1	1	4	3	4	4	1		3	4	4	4
Diisobutylene	V0747-75	2	2	4	1	1	1	4	4	4	4	4	4	4	4	3	4
Diisooctyl sebacate	V0747-75	3	3	3	2	1	1	4	4	4	4	4	4	4	4	3	3
Diisopropyl ketone	E0540-80	4	4	1	4	1	1	4	4	4	4	1		4	4	4	4
2.2-Dimethyl butane	N0674-70	1	1	4	1	1	1	2	3	1	4	4	4	4	2	1	4
2.3-Dimethyl butane	N0674-70	1	1	4	1	1	1	2	3	1	4	4	4	4	2	1	4
2.4-Dimethyl pentane	N0674-70	1	1	4	1	1	1	2	4	1	4	4	4	4	2	3	4
Dimethyl ether (methylether)	E0540-80	1	1	1	1	1	1	3	1	4		1	1	1	4	1	1
Dimethyl formamide (DMF)	E0540-80	4	4	1	4	1	1	4	4	4	4	1		4	4	4	1
Dimethyl hydrazine asym. (UDMH)	E0540-80	3	3	1	4	1	1	3				1			1	4	4
Dimethyl phthalate	V0747-75	4	4	2	2	1	1	4	4	4		2	4	4	4	2	
Dinitro toluene	V3819-75	4	4	4	4	1	1	4	4	4	4	4	4	4	4	4	4
Dioctyl phthalate (DOP)	E0540-80	4	4	1	1	1	1	4	4	4	4	1		4	4	1	1
Dioctyl sebacate (DOS)	V0747-75	4	4	1	1	1	1	4	4	4	3	1		4	4	4	4
Dioxane	E0540-80	4	4	2	4	1	1	4	4	4	4	2		4	4	4	4
Dioxolane	E0540-80	4	4	2	4	1	1	4	4	4	4	3	4	4	4	4	4
Dipentene (paint solvent)	V0747-75	2	2	4	1	1	1	4	4	4	4	4	4	4	4	3	4
Diphenyl (biphenyl)	V0747-75	4	4	4	1	1	1	4	4	4	4	4	4	4	4	2	4
Diphenyl ether	V0747-75	4	4	4	1	1	1	4	4	4	4	4	4	4	4	2	3
DNOx, aqueous urea solution	E8867-60	1	3	1	4	4	1	4	4	4							
DNOx, aqueous urea solution	N8907-75	1	3	1	4	4	1	4	4	4							
Dodecyl alcohol	N0674-70	1	1	1	1	1	1	1	1	4	4	1		1	1	2	2
Dow Chemical 50-4	E0540-80			1	4	1	1	2	1			2			2	4	
Dow Chemical ET588	E0540-80	3	3	1	4	1	1	2	1			2			2	4	
Dow Corning-11	E0540-80	1	1	1	1	1	1	1	1	1	1	1	1	1	1	1	3
Dow Corning-1208	E0540-80	1	1	1	1	1	1	1	1	1	1	1	1	1	1	1	3
Dow Corning-200	E0540-80	1	1	1	1	1	1	1	1	1	1	1	1	1	1	1	3

Tel: +45 63 12 83 00 | Email: ps@hymatik.com | www.hymatik.com | Hvidkaervej 27a, DK-5250 Odense SV, Denmark

11 Appendix

Compatitibility rating[1)]	Parker compound	static and dynamic													static		
		HNBR	NBR	EPDM	FKM	FKM (HiFluor®)	FFKM (Parofluor®)	CR	SBR	ACM	TPU	IIR	BR	NR	CSM (Hypalon)	FVMQ	VMQ
Dow Corning-220	E0540-80	1	1	1	1	1	1	1	1	1	1	1	1	1	1	1	3
Dow Corning-3	E0540-80	1	1	1	1	1	1	1	1	1	1	1	1	1	1	1	3
Dow Corning-33	E0540-80	1	1	1	1	1	1	1	1	1	1	1	1	1	1	1	3
Dow Corning-4	E0540-80	1	1	1	1	1	1	1	1	1	1	1	1	1	1	1	3
Dow Corning-4050	E0540-80	1	1	1	1	1	1	1	1	1	1	1	1	1	1	1	3
Dow Corning-44	E0540-80	1	1	1	1	1	1	1	1	1	1	1	1	1	1	1	3
Dow Corning-5	E0540-80	1	1	1	1	1	1	1	1	1	1	1	1	1	1	1	3
Dow Corning-510	E0540-80	1	1	1	1	1	1	1	1	1	1	1	1	1	1	1	3
Dow Corning-55	E0540-80	1	1	1	1	1	1	1	1	1	1	1	1	1	1	1	3
Dow Corning-550	E0540-80	1	1	1	1	1	1	1	1	1	1	1	1	1	1	1	3
Dow Corning-6620	E0540-80	1	1	1	1	1	1	1	1	1	1	1	1	1	1	1	3
Dow Corning-704	E0540-80	2	2	1	1	1	1					1					
Dow Corning-705	E0540-80	2	2	1	1	1	1					1					
Dow Corning-710	E0540-80	1	1	1	1	1	1	1	1	1	1	1	1	1	1	1	3
Dow Corning-F60	E0540-80	1	1	1	1	1	1	1	1	1	1	1	1	1	1	1	3
Dow Corning-F61	E0540-80	1	1	1	1	1	1	1	1	1	1	1	1	1	1	1	3
Dow Corning-XF60	E0540-80	1	1	1	1	1	1	1	1	1	1	1	1	1	1	1	3
Dow Guard	N0674-70	1	1	1	1	1	1	1	1	3	3	1		1	1	1	1
Dowtherm A, heat transfer oil	V0747-75	4	4	4	1	1	1	4	4	4	4	4	4	4	4	2	4
Dowtherm E, heat transfer oil	V0747-75	4	4	4	1	1	1	4	4	4	4	4	4	4	4	2	4
Dowtherm, 209, 50 % solution	E0540-80	3	3	1	4	1	1	2				2					3
Drilling oil	N0674-70	1	1	4	1	1	1	2	4	1	1	4	4	4	2	1	4
Ducor (paint diluter)	V0747-75	4	4	4	2	1	1	4	4	4	4	4	4	4	4	2	4
Ducor paint diluter	V0747-75	4	4	4	2	1	1	4	4	4	4	4	4	4	4	2	4
E																	
Elco 28-EP Lubricant	N0674-70	1	1	4	1	1	1	3	4	1	1	4	4	4	4	1	2
Electrolyte	E3750-70	3		1	4												
Electrolyte	E8556-70	3		1	4												
Electroplating baths for chrome	V0747-75			1	1	1	1		4			1		4	4		4
Electroplating baths, other metals	E0540-80	1	1	1	1	1	1					1			1		4
Epichlorohydrine	V3819-75	4	4	3	4	1	1	4	4			4		4	4	4	
Epoxy resins	E0540-80			1	4	1	1	1				1					
Esam-6 Fluid	N0674-70		1	1	4	1	1	2	1			2			2	4	
Esso Fuel 208	N0674-70	1	1	4	1	1	1	2	4	1	4	4	4	4	3	1	4
Esso Golden Gasoline	V0747-75	2	2	4	1	1	1	4	4	4	4	4	4	4	4	1	4
Esso motor oil	N0674-70	1	1	4	1	1	1	3	4	1	4	4	4	4	4	1	4
Esso transmission oil (Type A)	N0674-70	1	1	4	1	1	1	2	4	1	3	4	4	4	4	1	4
Esso Univis No. 40 (hydraulic oil)	N0674-70	1	1	4	1	1	1	2	4	1	1	4	4	4	2	1	4
Esso WS2812 (Mil-L-7808A)	V0747-75	1	1	4	1	1	1	4	4	2	4	4	4	4	4	1	4
Esso XP90-EP Lubricant	N0674-70	1	1	4	1	1	1	2	4	1	1	4	4	4	2	1	4
Esstic 42, 43	N0674-70	1	1	4	1	1	1	2	4	1	2	4	4	4	4	1	4
Ethane	N0674-70	1	1	4	1	1	1	3	4	1	1	4		4	3	3	4
Ethanol (ethyl alcohol)	E0540-80	1	1	1	3	1	1	1	1	4	4	1	1	1	1	1	1
Ethanolamine (colamine)	E0540-80	2	2	2	4	3	1	2	2	4	3	2	2	2	3	4	2

Tel: +45 63 12 83 00 | Email: ps@hymatik.com | www.hymatik.com | Hvidkaervej 27a, DK-5250 Odense SV, Denmark

11 Appendix

Compatitibility rating[1)]	Parker compound	static and dynamic													static		
		HNBR	NBR	EPDM	FKM	FKM (HiFluor®)	FFKM (Parofluor®)	CR	SBR	ACM	TPU	IIR	BR	NR	CSM (Hypalon)	FVMQ	VMQ
Ether (various)	V3819-75	4	4	3	3	1	1	4	4	3	2	4	4	4	4	3	4
2-Ethyl-1-hexanol (Isooctanol)	N0674-70	1	1	1	1	1	1	1	1	4	4	1	1	1	1	1	2
Ethyl acetate	E0540-80	4	4	2	4	2	1	4	4	4	4	2	4	4	4	4	2
Ethyl acrylate	E0540-80	4	4	2	4	1	1	4	4	4	4	2	4	4	4	4	2
Ethyl acrylicacid	E0540-80	4	4	2				2	4	4	4	2	4	4	4	4	4
Ethyl alcohol (ethanol)	E0540-80	1	1	1	3	1	1	1	1	4	4	1	1	1	1	1	1
Ethyl benzene	V0747-75	4	4	1	1	1	1	4	4	4	4	4	4	4	4	1	4
Ethyl benzoate	V0747-75	4	4	4	1	1	1	4	4	4	4	4	4	4	4	1	4
Ethyl bromide	V0747-75	2	2	4	1	1	1	4				4	4	4	4	1	4
Ethyl cellulose	N0674-70	2	2	2	4	1	1	2	2	4	2	2	2	2	2	4	2
Ethyl chloride	N0674-70	1	1	1	1	1	1	1	2	3	2	1	2	1	4	1	4
Ethyl chloroformate	V0747-75	4	4	4	1	1	1	4	4	4	4	4	4	4	4	2	4
Ethyl cyclopentane	N0674-70	1	1	4	1	1	1	3	4	2	1	4	4	4	4	1	4
Ethyl ether	V3819-75	3	3	3	4	1	1	4	4	4	2	3	4	4	4	3	4
Ethyl mercaptan	V0747-75	4	4		2	1	1	3	4			4	4	4	3		3
Ethyl oxalate	V0747-75	4	4	4	1	1	1	4	4	4		4	4	4	4	2	4
Ethyl silicate	E0540-80	1	1	1	1	1	1	1	2			1	2	2	2	1	
Ethylene (ethene)	V0747-75	2	4	4	1	1	1	4	4	2	2	4		4	4	1	4
Ethylene chloride	V0747-75	4	4	4	2	1	1	4	4	4	4	4	4	4	4	2	4
Ethylene diamine	E0540-80	1	1	1	4		1	1	2	4	4	1	2	1	2	4	1
Ethylene dibromide	V0747-75	4	4	3	1	1	1	4	4	4	4	3	4	4	4	3	4
Ethylene dichloride	V0747-75	4	4	3	1	1	1	4	4	4	4	3	4	4	4	3	4
Ethylene glycol (glycol), Prestone®	E0540-80	1	1	1	1	1	1	1	1	4	2	1	1	1	1	1	1
Ethylene oxide	V3819-75	4	4	3	4	2	1	4	4	4	4	3	4	4	4	4	4
Ethylene oxide (12 %) and Freon 12 (80 %)	E0540-80	3	3	2	4			4	4	4	4	2	4	4	4	4	4
Ethylene trichloride (“Tri”)	V0747-75	4	4	4	1	1	1	4	4	4	4	4	4	4	4	2	4
Ethylenechlorohydrin	V0747-75	4	4	2	1	1	1	2	2	4	4	2	2	2	2	2	3
Ethylpentachlorbenzene	V0747-75	4	4	4	1	1	1	4	4	4	4	4	4	4	4	2	4
F																	
F-60 Fluid (Dow Corning)	E0540-80	1	1	1	1	1	1	1	1	1	1	1	1	1	1	1	3
F-61 Fluid (Dow Corning)	E0540-80	1	1	1	1	1	1	1	1	1	1	1	1	1	1	1	3
FAMB, FAMA	V0747-75	3	3	4	2	1	1					4	4	4		1	3
FAMB, FAMA	V3736-75	3	3	4	2	1	1					4	4	4		1	3
FAMB, FAMA	V8590-60	3	3	4	2	1	1					4	4	4		1	3
FAMB, FAMA	V8703-75	3	3	4	2	1	1					4	4	4		1	3
FAMB, FAMA	V8727-70	3	3	4	1	1	1					4	4	4		1	3
FAMB, FAMA	V8908-80	3	3	4	1	1	1					4	4	4		1	3
FAMB, FAMA	V8989-80	3	3	4	1	1	1					4	4	4		1	3
Fatty acids	V0747-75	2	2	3	1	1	1	2	4			3	4		4		
FC43 Heptacosofluorotri-butylamine	N0674-70	1	1	1	1			1	4			1			1	1	1
FC75	E0540-80	1	1	1	2			1	4			1			1	2	1
Fixing salt	N0674-70	1	1	1	1	1	1	1	1	4	4	1		1	1	1	1
Fluorine silica	E0540-80	2	2	1	1	1	1	2	2			1		1	1	4	4
Fluorolube	E0540-80	1	1	1	2	1	1	1	4			1			1	2	1

Tel: +45 63 12 83 00 | Email: ps@hymatik.com | www.hymatik.com | Hvidkaervej 27a, DK-5250 Odense SV, Denmark

11 Appendix

Compatitibility rating[1)]	Parker compound	static and dynamic														static		
		HNBR	NBR	EPDM	FKM	FKM (HiFluor®)	FFKM (Parofluor®)	CR	SBR	ACM	TPU	IIR	BR	NR	CSM (Hypalon)	FVMQ	VMQ
Fluorosilicic acid	E0540-80	2	2	1	1	1	1	2	2			1		1	1	4	4
Formaldehyde	E0540-80	3	3	2	4	3	1	3	3	4	4	2	2	2	3	4	2
Formic acid (methan acid)	E0540-80	4	4	1	4	1	1	2	3		4	1		3		4	
Formicacid methyl ester	C0557-70	4	4	2		2	1	2	4			2	4	4	2		
Freon 11	N0674-70	2	2	4	2	4	4	4	4			4		4	1		4
Freon 112	C0557-70	2	2	4	1	2	2	2	4			4		4	2		4
Freon 113	C0557-70	1	1	4	2	4	4	1	2		1	4		4	1		4
Freon 114	C0557-70	1	1	1	1	4	4	1	1			1		1			4
Freon 114B2	C0557-70	2	2	4	2	4	4	1	4			4		4	1		4
Freon 115	C0557-70	1	1	1	1	4	4	1	1			1		1			
Freon 12	C0557-70	1	1	2	1	4	4	1	1		1	2	4	2	1	4	4
Freon 12 & ASTM oil no. 2 (50/50)	N0674-70	1	1	4	1	3	3	2	4			4	4	4	2	2	4
Freon 12 & Suniso 4G (50/50)	N0674-70	1	1	4	1	3	3	2	4			4	4	4	2	2	4
Freon 13	C0557-70	1	1	1	1	4	4	1	1			1		1	1	4	4
Freon 134a	C0557-70	1	2	1	4			1									
Freon 13B1	C0557-70	1	1	1	1	4	4	1	1			1		1	1	2	4
Freon 14	C0557-70	1	1	1	1	4	4	1	1		1	1		1	1		4
Freon 21	C0557-70	4	4	4	4	2	2	2	4			4	4	4	4		4
Freon 22	C0557-70	4	4	1	4	2	2	1	1	2	4	1		1	1	2	4
Freon 22 & ASTM oil no. 2 (50/50)	C0557-70	4	4	4	2	2	2	2	4	2		4		4		2	4
Freon 31	C0557-70	4	4	1	4	2	2	1	2			1		2	2		
Freon 32	C0557-70	1	1	1	4	2	2	1	1			1		1	1		
Freon 502	C0557-70	2	2	1	2	1	1	1	1			1		1			
Freon BF	V0747-75	2	2	4	1			2	4			4		4	2		4
Freon C318	C0557-70	1	1	1	2			1	1			1		1	1		
Freon K-142B	C0557-70	1	1	1	4			1	1			1		2	1		
Freon K-152A	C0557-70	1	1	1	4			1	1			1		1	4		
Freon MF	N0674-70	2	2	4	2			4	4			4		4	1		4
Freon PCA	N0674-70	1	1	4	2			1	2		1	4		4	1		4
Freon TF	N0674-70	1	1	4	2			1	2		1	4		4	1		4
Fruit acid	N0674-70	1	1	1													
Fuel oil mixture	V8892-70	3	3	4	1	1	1					4	4	4		1	3
Fuels containing ethanol (E85)	V8590-60	2	3	4	1	1	1	2	4	1	2	4	4	4	3	1	4
Fuels containing ethanol (E85)	V8703-75	2	3	4	1	1	1	2	4	1	2	4	4	4	3	1	4
Fuels containing ethanol (E85)	V8727-70	2	3	4	1	1	1	2	4	1	2	4	4	4	3	1	4
Fuels containing ethanol (E85)	V8908-80	2	3	4	1	1	1	2	4	1	2	4	4	4	3	1	4
Fuels containing ethanol (E85)	V8989-80	2	3	4	1	1	1	2	4	1	2	4	4	4	3	1	4
Fuels containing methanol (M15 to M100)	V8590-60	2	3	4	1	1	1	2	4	1	2	4	4	4	3	1	4
Fuels containing methanol (M15 to M100)	V8703-75	2	3	4	1	1	1	2	4	1	2	4	4	4	3	1	4
Fuels containing methanol (M15 to M100)	V8727-70	2	3	4	1	1	1	2	4	1	2	4	4	4	3	1	4
Fuels containing methanol (M15 to M100)	V8908-80	2	3	4	1	1	1	2	4	1	2	4	4	4	3	1	4
Fuels containing methanol (M15 to M100)	V8989-80	2	3	4	1	1	1	2	4	1	2	4	4	4	3	1	4
Fumaric acid	N0674-70	1	1		1	1	1	2	2	4		4	2	1	2	1	2
Furfural (Furanaldehyde)	E0540-80	4	4	2	4	1	1	4	4	4		2	4	4	4		4

Tel: +45 63 12 83 00 | Email: ps@hymatik.com | www.hymatik.com | Hvidkaervej 27a, DK-5250 Odense SV, Denmark

11 Appendix

Compatitibility rating[1)]	Parker compound	static and dynamic													static		
		HNBR	NBR	EPDM	FKM	FKM (HiFluor®)	FFKM (Parofluor®)	CR	SBR	ACM	TPU	IIR	BR	NR	CSM (Hypalon)	FVMQ	VMQ
Furfuryl alcohol	E0540-80	4	4	2		1	1	4	4	4	4	2	4	4	4	4	4
Furylcarbinol	E0540-80	4	4	2		1	1	4	4	4	4	2	4	4	4	4	4
Fyrquel 90, 100, 150, 220, 300, 500	E0540-80	4	4	1	1	1	1	4	4	4	4	1	4	4	4	2	1
Fyrquel A60	E0540-80	4	4	2	4	1	1	4	4	4	4	2	4	4	4	4	3
G																	
Gallic acid	V0747-75	2	2	2	1	1	1	2	2	4	4	2		1	2	1	
Gelatine, aqueous	N0674-70	1	1	1	1	1	1	1	1	4	4	1		1	1	1	1
Generator gas	N0674-70	1	1	4	1	1	1	3	4	3	1	4		4	3	3	3
Glauber's salt (sodium sulfate)	V0747-75	4	4	2	1	1	1	2	4	4		2	4	2	2	1	
Glucose	N0674-70	1	1	1	1	1	1	1	1		4	1	1	1	1	1	1
Glycerol	N0674-70	1	1	1	1	1	1	1	1	4	4	1		1	1	1	1
Glycerol triacetate	E0540-80	2	2	1	4	1	1	2	3	4	4	1	2	2	2	4	
Glycol (ethylene glycol)	E0540-80	1	1	1	1	1	1	1	1	4	4	1	1	1	1	1	1
Green sulfate solution	E0540-80	2	2	1	1	1	1	2	2	4		1	2	2	2	2	
Gulf Harmony Oils	N0674-70	1	1	4	1	1	1	2	4	1	1	4	4	4	4	1	4
Gulf High Temperature Grease	N0674-70	1	1	4	1	1	1	2	4	1	1	4	4	4	4	1	4
Gulf Legion Oils	N0674-70	1	1	4	1	1	1	2	4	1	1	4	4	4	4	1	4
Gulf Security Oils	N0674-70	1	1	4	1	1	1	2	4	1	2	4	4	4	4	1	4
Gulfcrown Grease	N0674-70	1	1	4	1	1	1	2	4	1	1	4	4	4	4	1	4
H																	
Halon 1301	C0557-70	1	1	1	1	1	1	1	1			1		1	1	2	4
Halothane (anesthetic)	V0747-75	4	4	4	1	1	1	4	4	4	4	4	4	4	4	2	4
Halowax oil	V0747-75	4	4	4	1	1	1	4	4			4	4	4	4	1	4
Hannifin, Parker-O-Lube	N0674-70	1	1	4	1	1	1	1	2	1	1	4	4	4	1	1	2
Heating oil, acidic	N0674-70	1	1	4	1	1	1	2	4	1	2	4	4	4	4	1	1
Heating oil, light	N0674-70	1	1	4	1	1	1	3	4	1	3	4		4	4	1	3
Heatingl oil, heavy (hard coal)	V0747-75	3	3	4	1	1	1	4	4	1	3	4		4	4	1	3
HEF-2 (High Energy Fuel)	V0747-75	2	2	4	1	1	1	4	4	4	4	4	4	4	4	2	4
Helium	N0674-70	1	1	1	1	1	1	1	1	1	1	1		1	1	1	1
Heptane (n-Heptane)	N0674-70	1	1	4	1	1	1	3	4	1	1	4		4	4	1	4
Hexaldehyde (n-Hexaldehyde)	E0540-80	4	4	1	4	1	1	1	4	4	4	3		4	4	4	3
Hexane (n-Hexane)	N0674-70	1	1	4	1	1	1	3	4	1	1	4		4	4	1	4
Hexyl alcohol	N0674-70	1	1	3	1	1	1	3	1	4	4	3		1	3	1	3
HFO 124yf, refrigerant (PAG oil)	E8901-70	1	2	1	4	1	1	1									
HFO 124yf, refrigerant (POE & PAO oil)	N3554-75	1	2	4	4	1	1	1									
HFO 124yf, refrigerant (POE & PAO oil)	N8822-75	1	2	4	4	1	1	1									
Houghto-Safe 1010 (Phosphate ester)	E0540-80	4	4	1	1	1	1	4	4	4		1	4	4	4	2	3
Houghto-Safe 1055 (Phosphate ester)	E0540-80	4	4	1	1	1	1	4	4	4		1	4	4	4	2	3
Houghto-Safe 1120 (Phosphate ester)	E0540-80	4	4	1	1	1	1	4	4	4	4	1	4	4	4	2	3
Houghto-Safe 271 (water / glycol base), HFC	N0674-70	1	1	1	2	1	1	2	1	4	4	2				2	2
Houghto-Safe 5040 (water / oil emulsion)	N0674-70	1	1	4	1	1	1	2	4	4	4	4	4	4	4	2	3
Houghto-Safe 620 (water / glycol base), HFC	N0674-70	1	1	1	2	1	1	2	1	4	4	2				2	2
Hydraulic oils (mineral oil)	N0674-70	1	1	4	1	1	1	3	4	1	3	4		4	4	1	3
Hydrazine	E0540-80	3	3	1	4	1	1	3	3	4	4	1		4	3	4	4

Tel: +45 63 12 83 00 | Email: ps@hymatik.com | www.hymatik.com | Hvidkaervej 27a, DK-5250 Odense SV, Denmark

11 Appendix

Compatitibility rating[1)]	Parker compound	static and dynamic													static		
		HNBR	NBR	EPDM	FKM	FKM (HiFluor®)	FFKM (Parofluor®)	CR	SBR	ACM	TPU	IIR	BR	NR	CSM (Hypalon)	FVMQ	VMQ
Hydrobromic acid, 40 %	E0540-80	4	4	1	1	1	1	2	4	4	4	1	4	1	1	3	4
Hydrobromic acid, aqueous	E0540-80	4	4	1	1	1	1	3	4	4	4	1		3	1	4	4
Hydrocarbons (saturated)	N0674-70	1	1	4	1	1	1	2	4	1	2	4	4	4	3	1	4
Hydrochloric acid, 3 moles	E0540-80	3	3	1	1	1	1	3	3	2		1	3	3	2	2	4
Hydrochloric acid, 3-molar	E0540-80	3	3	1	1	1	1	3	3	2		1	3	3	2	2	4
Hydrochloric acid, concentrated	V3738-75	4	4	3	1	1	1	4	4	4		1	4	4	4	3	4
Hydrochloric acid, concentrated	V3738-75	4	4	3	1	1	1	4	4	4		1	4	4	4	3	4
Hydrocyanic acid	E0540-80	2	2	1	1	1	1	2	2	4		1	2	1	1	2	3
Hydro-Drive MIH 50 (mineral oil based)	N0674-70	1	1	4	1	1	1	2	4	1	2	4	4	4	4	1	2
Hydrofluoric acid, 65 % or less, cold	E0540-80	3	3	1	1	1	1	1	2	4		1	4	2			4
Hydrofluoric acid, 65 % or less, cold	V8920-75	4	4	3	2	1	1	4	4	4		3	4	4		4	4
Hydrofluoric acid, 65 % or less, hot	V8920-75	4	4	4	3	2	1	3	4	4	4	4	4	4	3	4	4
Hydrofluoric acid, 65 % or more, hot	V8920-75	4	4	4	3	2	1	4	4	4	4	4	4	4	4	4	4
Hydrogen	E0540-80	1	1	1	1	1	1	1	1	2	1	1		1	1	4	4
Hydrogen cyanide	E0540-80	3	3	1	1	1	1	3	3	4		1		3	1	3	
Hydrogen fluoride (hydrofluoric acid), anhydrous	E0540-80	4	4	1	4	2	1		4	4		1	4	4		4	
Hydrogen peroxide, 30 %	V0747-75	3	3	1	1	1	1	1	1	4	1	1		1	1	1	1
Hydrogen peroxide, 90 %	V0747-75	4	4	4	1	1	1	4	4	4	4	4		4	4	3	1
Hydrogen sulfide, dry, cold	E0540-80	1	1	1	4	1	1	1	1	4		1	1	1	1	3	3
Hydrogen sulfide, dry, hot	E0540-80	4	4	1	4	1	1	2	4	4		1	4	4	3	3	3
Hydrogen sulfide, wet, cold	E0540-80	4	4	1	4	1	1	1	4	4		1	4	4	2	3	3
Hydrogen sulfide, wet, hot	E0540-80	4	4	1	4	1	1	2	4	4		1	4	4	3	3	3
Hydrogen sulphide	E0540-80	4	4	1	4	1	1	1	4	4	4	1		4	4	4	4
Hydrogen, gaseous, cold	E0540-80	1	1	1	1	1	1	1	2	2	1	1	1	2	1	3	3
Hydrogen, gasous, hot	E0540-80	1	1	1	1	1	1	1	2	2	1	1	1	2	1	3	3
Hydrolube (water / ethylene glycol)	N0674-70	1	1	1	1	1	1	2	1	4	4	2				2	2
Hydroquinone	V0747-75	3	3	4	2	1	1		3					3		3	
Hyjet	E0540-80	4	4	1	4	1	1	4	4	4	4	2	4	4	4		
Hyjet III	E0540-80	4	4	1	4	1	1	4	4	4	4	2	4	4	4		
Hyjet IV (replacement for III, S, W)	E0540-80	4	4	1	4			4	4	4	4	2	4	4	4		
Hypochlorous acid	V3819-75	4	4	2	1	1	1	4	4	4		2	4	2	4		
I																	
Illuminating gas (free of aromatic compounds)	N0674-70	1	1	4	1	1	1	3	4	1	1	4		4	3	2	3
Impregnation of wood (wolman salt)	N0674-70	1	1	1	1	1	1	2	1	2	1	1	1	1	1	1	1
Industron FF44	N0674-70	1	1	4	1	1	1	2	4	1	2	4	4	4	4	1	4
Industron FF48	N0674-70	1	1	4	1	1	1	2	4	1	2	4	4	4	4	1	4
Industron FF53	N0674-70	1	1	4	1	1	1	2	4	1	2	4	4	4	4	1	4
Industron FF80	N0674-70	1	1	4	1	1	1	2	4	1	2	4	4	4	4	1	4
Iodine	V0747-75	2	2	2	1	1	1	4	2			2			2	1	
Iron (II) sulfate, aqueous	N0674-70	1	1	1	1	1	1	1	1	4	4	1		1	1	1	1
Iron (III) chloride, aqueous	N0674-70	1	1	1	1	1	1	1	1	4	4	1		1	1	1	1
Iron chloride	N0674-70	1	1	1	1	1	1	2	1	1	1	1	1	1	2	1	2
Iron nitrate	N0674-70	1	1	1	1	1	1	1	1	1	1	1	1	1	1	1	2
Isobutyl alcohol	E0540-80	3	3	1	1	1	1	1	3	4	4	1		3	1	3	1

Tel: +45 63 12 83 00 | Email: ps@hymatik.com | www.hymatik.com | Hvidkaervej 27a, DK-5250 Odense SV, Denmark

11 Appendix

Compatitibility rating[1)]	Parker compound	static and dynamic													static		
		HNBR	NBR	EPDM	FKM	FKM (HiFluor®)	FFKM (Parofluor®)	CR	SBR	ACM	TPU	IIR	BR	NR	CSM (Hypalon)	FVMQ	VMQ
Isobutyl-n-butyrate	E0540-80	4	4	1	1	1	1	4	4	4		1	4	4	4	1	
Isocyanate	V3819-75	4	4	2	3	1	1	4	4	4	4	4	4	4	4	4	4
Isododecane	N0674-70	1	1	4	1	1	1	2	4	4		4	4	4	2	1	4
Isooctane	N0674-70	1	1	4	1	1	1	3	4	1	1	4		4	3	1	4
Isophorone (ketone)	E0540-80	4	4	1	4	1	1	4	4	4	4	1	4	4	4	4	4
Isopropanol (isopropyl alcohol)	E0540-80	2	2	1	1	1	1	2	2	4	4	1	2	1	1	2	1
Isopropyl acetate	E0540-80	4	4	2	4	1	1	4	4	4	4	2	4	4	4	4	4
Isopropyl alcohol (isopropanol)	E0540-80	2	2	1	1	1	1	2	2	4	4	1	2	1	1	2	1
Isopropyl benzene	V0747-75	4	4	4	1	1	1	4	4	4	4	4	4	4	4	2	4
Isopropyl chloride	V0747-75	4	4	4	1	1	1	4	4	4	4	4		4	4	3	4
Isopropyl ether	N0674-70	2	2	4	4	1	1	3	4	4	3	4		4	4	4	4
J																	
JP 3 (Mil-J-5624)	N0602-70	1	1	4	1	1	1	4	4	2	2	4	4	4	4	1	4
JP 4 (Mil-J-5624)	N0602-70	1	1	4	1	1	1	4	4	2	2	4	4	4	4	2	4
JP 5 (Mil-J-5624)	N0602-70	1	1	4	1	1	1	4	4	2	2	4	4	4	4	2	4
JP 6 (Mil-J-25656)	N0602-70	1	1	4	1	1	1	4	4	2	2	4	4	4	4	2	4
JP X (Mil-F-25604)	N0602-70	1	1	4	4	1	1	2	4			4	4	4	4	4	4
K																	
Kel F liquid	E0540-80	1	1	1	2	1	1		1			1			1	2	1
Kerosine (similar to RP-1 and JP-1)	N0674-70	1	1	4	1	1	1	4	4	1	3	4		4	4	1	4
L																	
Lactam amino acids	E0540-80	4	4	2	4	1	1	2	4			2	4	4	2	4	
Lactams	E0540-80	4	4	2	4	1	1	2	4			2	4	4	2	4	
Lactic acid, cold	N0674-70	1	1	1	1	1	1	1	1	4		1	1	1	1	1	
Lactic acid, hot	V0747-75	4	4	4	1	1	1	4	4	4		4	4	4	3	2	
Laughing gas (nitrous oxide)	E0540-80	1	1	2	1	1	1										1
Lavender oil	V0747-75	3	3	4	1	1	1	4	4	3	4	4		4	4	3	4
Lead acetate, aqueous (sugar of lead)	E0540-80	3	3	1	4	1	1	3	4	4	4	1		1	4	4	4
Lead nitrate	N0674-70	1	1	1		1	1	1	1			1	1	1	4	1	2
Lead sulfate	C0557-70	2	2	1	1	1	1	1	2	4		1	2	2	1	1	2
Lehigh X1169	N0674-70	1	1	4	1	1	1	2	4	1	1	4	4	4	2	1	4
Lehigh X1170	N0674-70	1	1	4	1	1	1	2	4	1	1	4	4	4	2	1	4
Light lubricant	N0674-70	1	1	4	1	1	1	4	4	1	1	4	4	4	4	1	4
Light oil (crude benzene)	N0674-70	1	1	4	1	1	1	2	4	1	2	4	4	4	4	1	4
Ligroin (mineral spirits, white spirit)	N0674-70	1	1	4	1	1	1	2	4	1	2	4	4	4	3	1	4
Lime sulfur	E0540-80	4	4	1	1	1	1	1	4	4		1	4	4	1	1	1
Limewash	N0674-70	1	1	1	1	1	1	2	1	4		1	2	1	2	1	2
Lindol, hydraulic fluid (phosphate ester) type HFD - R	E0540-80	4	4	1	2	1	1	4	4	4	4	1	4	4	4	3	3
Linoleic acid	S0604-70	2	2	4	2	1	1	2	4			4	4	4	4		2
Linseed oil	N0674-70	1	1	4	1	1	1	4	4	1	3	4		4	4	1	4
Liquid petroleum gas (LPG)	N3813-70	1	2	4	1	1	1	2	4	3	1	4	4	4	4	3	3
Liquimoly	N0674-70	1	1	4	1	1	1	2	4	1	2	4	4	4	4	1	4
LPG (propane, butane, propylene)	N0674-70	1	1	4	1	1	1	2	4	3	1	4	4	4	4	3	3
Lubricating oils, di-ester base	V0747-75	2	2	4	1	1	1	3	4	2		4	4	4		2	4

Tel: +45 63 12 83 00 | Email: ps@hymatik.com | www.hymatik.com | Hvidkaervej 27a, DK-5250 Odense SV, Denmark

11 Appendix

Compatitibility rating[1)]	Parker compound	static and dynamic														static		
		HNBR	NBR	EPDM	FKM	FKM (HiFluor®)	FFKM (Parofluor®)	CR	SBR	ACM	TPU	IIR	BR	NR	CSM (Hypalon)	FVMQ	VMQ
Lubricating oils, petroleum based	N0674-70	1	1	4	1	1	1	2	4	1	2	4	4	4	4	1	4
Lubricating oils, SAE 10, 20, 30, 40, 50	N0674-70	1	1	4	1	1	1	2	4	1	2	4	4	4	4	1	4
Lye, caustic soda	E0540-80	2	2	1	2	1	1	2	2	4	4	1	2	1	1	2	2
M																	
Magnesium chloride, aqueous	N0674-70	1	1	1	1	1	1	1	1	4	4	1		1	1	1	1
Magnesium hydroxide, aqueous	E0540-80	1	1	1	1	1	1	1	1	4	4	1		1	1	1	1
Magnesium salts	N0674-70	1	1	1	1	1	1	1	1	1	1	1	1	1	1	1	1
Magnesium sulfate, aqueous	N0674-70	1	1	1	1	1	1	1	1	4	4	1		1	1	1	1
Malathion (insecticide)	V0747-75	2	2	4	1	1	1		4			4	4	4		2	4
Maleic acid, aqueous	V0747-75	1	1	1	1	1	1	1	1	4	4	1		1	1	2	2
Maleic anhydride	E0540-80	4	4	2	4	1	1	4	4	4		2	4	4	4		
Malic acid	V8892-70	1	1		1	1	1	2	2	4		4	2	1	2	1	2
Marsh gas	N0674-70	1	1	4	1	1	1	3	4	1	3	4		4	3	3	4
MCS 312	V0747-75	4	4	4	1	1	1	4	4	4		4	4	4		1	1
MCS 352	E0540-80	4	4	1	4	1	1	4	4	4	4	2	4	4	4	3	3
MCS 463	E0540-80	4	4	1	4	1	1	4	4	4	4	2	4	4	4	3	3
Mercuric chloride, aqueous	N0674-70	1	1	1	1	1	1	1	1	4	4	1		1	1	2	2
Mercury	N0674-70	1	1	1	1	1	1	1	1	1	1	1		1	1	1	1
Mercury vapors	N0674-70	1	1	1	1	1	1	1	1			1	1	1	1		
Mesityl oxide (ketone)	E0540-80	4	4	2	4	1	1	4	4	4	4	2	4	4	4	4	4
Methacrylic acid	E0540-80	4	4	2	3	1	1	2	4	4	4	2	4	4	4	4	4
Methane	N0674-70	1	1	4	1	1	1	3	4	1	3	4		4	3	3	4
Methanol (methyl alcohol)	N0674-70	1	1	1	4	1	1	1	1	4	4	1	1	1	1	1	1
2-Methylpentane	N0674-70	1	1	4	1	1	1	2	4	1	4	4	4	4	2	3	4
3-Methylpentane	N0674-70	1	1	4	1	1	1	2	4	1	4	4	4	4	2	3	4
Methyl acetate	E0540-80	4	4	2	4	3	1	2	4	4	4	2	4	4	4	4	4
Methyl acetoacetate	E0540-80	4	4	2	4	1	1	4		4	4	2			4	4	2
Methyl acrylate	E0540-80	4	4	2	4	1	1	2	4	4	4	2	4	4	4	4	4
Methyl acrylic acid	E0540-80	4	4	2	3	1	1	2	4	4	4	2	4	4	4	4	4
Methyl alcohol (methanol)	E0540-80	1	1	1	4	1	1	1	1	4	4	1	1	1	1	1	1
Methyl aniline	V0747-75	4	4		2	1	1	4	4	4	4		4	4	4		
Methyl benzoate	V0747-75	4	4	4	1	1	1	4	4	4	4	4	4	4	4	1	4
Methyl benzoate	V0747-75	4	4	4	1	1	1	4	4	4	4	4	4	4	4	1	4
Methyl bromide	V0747-75	2	2	4	1	1	1	4		3		4	4	4	4	1	
Methyl butyl ketone	E0540-80	4	4	1	4	1	1	4	4	4	4	1	4	4	4	4	4
Methyl carbonate	V0747-75	4	4	4	1	1	1	4	4	4	4	4	4	4	4	2	4
Methyl cellosolve	E0540-80	3	3	2	4	1	1	3	4	4	4	2	4	4	4	4	4
Methyl cellulose	N0674-70	2	2	2	4	1	1	2	2	4	2	2	2	2	2	4	2
Methyl chloride	V0747-75	4	4	3	1	1	1	4	4	4	4	3	4	4	4	2	4
Methyl chloroform	V0747-75	4	4	4	1	1	1	4	4	4	4	4	4	4	4	2	4
Methyl cyclopentane	V0747-75	4	4	4	1	1	1	4	4	4	4	4		4	4	3	4
Methyl ether (dimethyl ether)	E0540-80	1	1	1	1	1	1	3	1	4		1	1	1	4	1	1
Methyl ethyl ketone peroxide	S0604-70	4	4	4	4	1	1	4	4	4	4	4	4	4	4	4	2
Methyl ethyl ketone, butanone, MEK	E0540-80	4	4	1	4	2	1	4	4	4	4	1		4	4	4	4

Tel: +45 63 12 83 00 | Email: ps@hymatik.com | www.hymatik.com | Hvidkaervej 27a, DK-5250 Odense SV, Denmark

11 Appendix

Compatitibility rating[1)]	Parker compound	static and dynamic													static		
		HNBR	NBR	EPDM	FKM	FKM (HiFluor®)	FFKM (Parofluor®)	CR	SBR	ACM	TPU	IIR	BR	NR	CSM (Hypalon)	FVMQ	VMQ
Methyl formate	C0557-70	4	4	2		1	1	2	4			2	4	4	2		
Methyl isobutyl ketone, MIBK	V3819-75	4	4	3	4	1	1	4	4	4	4	3		4	4	4	4
Methyl isopropylketone	V3819-75	4	4	3	4	1	1	4	4	4	4	3		4	4	4	4
Methyl methacrylate	V3819-75	4	4	4	4	1	1	4	4	4	4	4		4	4	4	4
Methyl oleate	V0747-75	4	4	2	1	1	1	4	4			2	4		4	2	
Methyl salicylate	E0540-80	4	4	2		1	1	4				2			4		
Methyl-D-bromide	V0747-75	4	4		1	1	1	4	4	4	4		4	4	4	2	4
Methylene chloride (dichloromethane)	V0747-75	4	4	4	2	1	1	4	4	4	4	4	4	4	4	2	4
Methylene dichloride	V0747-75	4	4	4	2	1	1	4	4	4	4	4	4	4	4	2	4
Methylene glycol	E0540-80	3	3	2	4			3	4	4	4	2	4	4	4	4	4
Mil-A-6091	E0515-80	2	2	1	1	1	1	1	1	4	4	1	1	1	1	1	1
Mil-C-4339	N0304-75	1	1	4	1	1	1	4	4	4	4	4	4	4	4	1	
Mil-C-7024	N0602-70	1	1	4	1	1	1	4	4	2	1	4	4	4	4	1	4
Mil-C-8188	V0747-75	2	2	4	2	1	1	4	4	3	4	4	4	4	4	2	4
Mil-E-9500	E0515-80	1	1	1	1	1	1	1	1	4	4	1	1	1	1	1	1
Mil-F-16884	N0304-75	1	1	4	1	1	1	3	4	1	3	4	4	4	3	1	4
Mil-F-17111	N0304-75	1	1	4	1	1	1	2	4	1	3	4	4	4	4	2	4
Mil-F-25558 (RJ-1)	N0602-70	1	1	4	1	1	1	2	4	1	1	4	4	4	2	1	4
Mil-F-25656	N0602-70	1	1	4	1	1	1	4	4	2	2	4	4	4	4	2	4
Mil-F-5566	E0515-80	2	2	1	1	1	1	2	2	4	4	1	2	1	1	1	1
Mil-G-10924	N0304-75	1	1	4	1	1	1	4	4	2	1	4	4	4	2	1	4
Mil-G-15793	N0304-75	1	1	4	1	1	1	2	4	1	1	4	4	4	2	2	4
Mil-G-21568	E0540-80	1	1	1	1	1	1	1	1	1	1	1	1	1	1	1	
Mil-G-25013	V0747-75	1	1	4	1	1	1	2	4	1	1	4	4	4	2	1	4
Mil-G-25537	N0304-75	1	1	4	1	1	1	2	4	2	1	4	4	4	2	1	4
Mil-G-25760	V0747-75	2	2	4	1	1	1	2	4	2	2	4	4	4	2	2	4
Mil-G-3278	L0677-70	2	2	4	1	1	1	4	4	1	2	4	4	4	4	2	4
Mil-G-3545	N0304-75	1	1	4	1	1	1	2	4	1	1	4	4	4	2	1	4
Mil-G-5572	N0602-70	1	1	4	1	1	1	4	4	2	2	4	4	4	4	1	4
Mil-G-7118	N0304-75	2	2	4	1	1	1	2	4	1	1	4	4	4	2	1	4
Mil-G-7187	N0304-75	1	1	4	1	1	1	4	4	1	1	4	4	4	4	1	4
Mil-G-7421	L0677-70	2	2	4	1	1	1	2	4	4	2	4	4	4	2	2	4
Mil-G-7711	N0304-75	1	1	4	1	1	1	4	4	2	1	4	4	4	4	1	2
Mil-H-13910	E0515-80	1	1	1	1	1	1	1	1	4	4	1	1	1	1	1	1
Mil-H-19457	E0515-80	4	4	1	2	1	1	4	4	4	4	1	4	4	4	4	3
Mil-H-22251	E0515-80	2	2	1		1	1	2	2			1			2		4
Mil-H-27601	V0747-75	1	1	4	1	1	1	2	4	1		4	4	4		2	3
Mil-H-5606	N0304-75	1	1	4	1	1	1	2	4	2	2	4	4	4	2	1	4
Mil-H-6083	N0304-75	1	1	4	1	1	1	1	4	1	1	4	4	2	2	1	4
Mil-H-7083	E0515-80	1	1	1	2	1	1	2	2	4	4	1	3	2	2	1	1
Mil-H-83282	V0747-75	1	1	4	1	1	1	2	4	2	2	4	4	4	2	1	4
Mil-H-8446 (MLO-8515)	V0747-75	2	2	4	1	1	1	1	4		1	4	4	4		1	4
Mil-J-5161	N0602-70	2	2	4	1	1	1	4	4	1	2	4	4	4	4	1	4
Mil-J-5624 JP-3, JP-4, JP-5	N0602-70	1	1	4	1	1	1	4	4	2	2	4	4	4	4	2	4

Tel: +45 63 12 83 00 | Email: ps@hymatik.com | www.hymatik.com | Hvidkaervej 27a, DK-5250 Odense SV, Denmark

11 Appendix

Compatitibility rating[1)]	Parker compound	static and dynamic													static		
		HNBR	NBR	EPDM	FKM	FKM (HiFluor®)	FFKM (Parofluor®)	CR	SBR	ACM	TPU	IIR	BR	NR	CSM (Hypalon)	FVMQ	VMQ
Milk, 3.5 % fat (UHT milk)	N8551-75	1	1	1	1	1	1	1	1	4	4	1		1	1	1	1
Mil-L-15016	N0304-75	1	1	4	1	1	1	2	4	1	1	4	4	4	2	2	4
Mil-L-15017	N0304-75	1	1	4	1	1	1	2	4	1	1	4	4	4	2	2	4
Mil-L-17331	V0747-75	1	1	4	1	1	1	2	4	1	1	4	4	4	2	1	4
Mil-L-2104	N0304-75	1	1	4	1	1	1	2	4	1	1	4	4	4	3	1	4
Mil-L-21260	N0304-75	1	1	4	1	1	1	2	4	1	1	4	4	4	2	1	4
Mil-L-23699	V0747-75	2	2	4	1	1	1	3	4	3		4	4	4		2	4
Mil-L-25681	V0747-75	2	2	1	1	1	1	2	2			1	2	2	2	2	4
Mil-L-3150	N0304-75	1	1	4	1	1	1	2	4	2	2	4	4	4	2	1	4
Mil-L-4343	N0304-75	1	1	1	1	1	1	1	1	1	1	1	1	1	1	1	3
Mil-L-6081	N0304-75	1	1	4	1	1	1	2	4	1	1	4	4	4	2	1	4
Mil-L-6082	N0304-75	1	1	4	1	1	1	2	4	1	1	4	4	4	2	1	1
Mil-L-6085	V0747-75	2	2	4	1	1	1	4	4	2	1	4	4	4	4	2	4
Mil-L-6387	V0747-75	2	2	4	1	1	1	4	4	2	1	4	4	4	4	2	4
Mil-L-7808	V0747-75	2	2	4	1	1	1	4	4	2	4	4	4	4	4	2	4
Mil-L-7870	N0304-75	1	1	4	1	1	1	2	4	1	4	4	4	4	4	1	4
Mil-L-9000	N0304-75	1	1	4	1	1	1	2	4	1	1	4	4	4	2	2	4
Mil-L-9236	V0747-75	2	2	4	1	1	1	4	4	2	4	4	4	4	4	2	4
Mil-O-3503	N0304-75	1	1	4	1	1	1	2	4	2	1	4	4	4	2	1	4
Mil-P-27402	E0515-80	2	2	1		1	1	2	2			1			2		4
Mil-R-25576 (RP-1)	N0602-70	1	1	4	1	1	1	2	4	1	1	4	4	4	2	1	4
Mil-S-3136, Type I Fuel	N0602-70	1	1	4	1	1	1	2	4	1	1	4	4	4	2	1	4
Mil-S-3136, Type II Fuel	N0602-70	2	2	4	1	1	1	4	4	2	2	4	4	4	4	2	4
Mil-S-3136, Type III Fuel	N0602-70	2	2	4	1	1	1	4	4	2	1	4	4	4	4	2	4
Mil-S-3136, Type IV Oil	N0674-70	1	1	4	1	1	1	1	4	1	1	4	4	4	1	1	1
Mil-S-81087	E0515-80	1	1	1	1	1	1	1	1	1	1	1	1	1	1	1	3
Mineral oil	N0674-70	1	1	4	1	1	1	3	4	1	3	4		4	3	1	3
MLO-7277 hydr.	V0747-75	3	3	4	1	1	1	4	4	3	3	4	4	4	4	3	4
MLO-7557	V0747-75	3	3	4	1	1	1	4	4	3	3	4	4	4	4	3	4
MLO-8200 hydr.	V0747-75	2	2	4	1	1	1	1	4		1	4	4	4	4	1	4
MLO-8515	V0747-75	2	2	4	1	1	1	1	4	3	1	4	4	4	3	1	4
Mobil 24 DTE	N0674-70	1	1	4	1	1	1	2	4	1	2	4	4	4	4	1	4
Mobil Delvac 1100, 1110, 1120, 1130	N0674-70	1	1	4	1	1	1	2	4	1	2	4	4	4	4	1	4
Mobil HF	N0674-70	1	1	4	1	1	1	2	4	1	2	4	4	4	4	1	4
Mobil Nyvac 20 and 30	N0674-70	1	1	1	1	1	1	1	1			1	1	1	1	1	1
Mobil Velocite C	N0674-70	1	1	4	1	1	1	2	4	1	2	4	4	4	4	1	4
Mobiloil SAE 20	N0674-70	1	1	4	1	1	1	2	4	1	1	4	4	4	2	1	4
Mobiltherm 600	N0674-70	1	1	4	1	1	1	2	4	1	2	4	4	4	4	1	4
Mobilux	N0674-70	1	1	4	1	1	1	2	4	1	2	4	4	4	4	1	4
Mono methyl aniline	V0747-75	4	4		2	1	1	4	4	4	4		4	4	4		
Monobromobenzene	V0747-75	4	4	4	1	1	1	4	4	4	4	4	4	4	4	2	4
Monochlorobenzene	V0747-75	4	4	4	1	1	1	4	4	4	4	4		4	4	3	4
Monoethanolamine	E0540-80	4	4	2	4	3	1	4	2	4	4	2	2	2	4	4	2
Monomethyl hydrazine	E0540-80	2	2	1		1	1	2	2			1			2		4

Tel: +45 63 12 83 00 | Email: ps@hymatik.com | www.hymatik.com | Hvidkaervej 27a, DK-5250 Odense SV, Denmark

11 Appendix

Compatitibility rating[1)]	Parker compound	static and dynamic													static		
		HNBR	NBR	EPDM	FKM	FKM (HiFluor®)	FFKM (Parofluor®)	CR	SBR	ACM	TPU	IIR	BR	NR	CSM (Hypalon)	FVMQ	VMQ
Mononitrotoluene	V3819-75	4	4	4	3	1	1	4	4	4	4	4	4	4	4	3	4
Monovinylacetylene	E0540-80	1	1	1	1	1	1	2	2			1	2	2	2		2
N																	
Naphthalene	V0747-75	4	4	4	1	1	1	4	4			4		4	4	1	4
Naphthalic acids	V0747-75	2	2	4	1	1	1	4	4			4	4	4	4	1	4
Naptha	V0747-75	2	2	4	1	1	1	4	4	2	2	4	4	4	4	2	4
Natural gas	N0674-70	1	1	4	1	1	1	3	4	3	3	4		4	3	3	4
Natural gas, acidic	V3819-75					1	1										
n-Butyl benzoate	E0540-80	4	4	1	1	1	1	4	4	4		1	4	4	4	1	
n-Butylether	V3819-75	3	3	3	4	1	1	4	4	4	2	3	4	4	4	3	4
Neatsfoot oil	N0674-70	1	1	2	1	1	1	4	4	1	1	2	4	4	4	1	2
Neon	N0674-70	1	1	1	1	1	1	1	1	1	1	1		1	1	1	1
Neville-Winthersche acid	V0747-75	4	4	2	1	1	1	4	4	4		2	4	4	4	2	4
N-Hexen-1	V0747-75	2	2	4	1	1	1	2	4	1	2	4	4	4	2	1	4
Nickel acetate	E0540-80	2	2	1	4	1	1	2	4	4	4	1	4	1	4	4	4
Nickel chloride	N0674-70	1	1	1	1	1	1	2	1	3	3	1	1	1	1	1	1
Nickel salts	N0674-70	1	1	1	1	1	1	2	1	3	3	1	1	1	1	1	1
Nickel sulfate	N0674-70	1	1	1	1	1	1	1	2	4	3	1	2	2	1	1	1
Nitric acid, 10 %	V3738-75	4	4	1	1	1	1	4	4	4	4	1		4	1	4	4
Nitric acid, 65 %	V3738-75	4	4	4	2	1	1	4	4	4	4	4		4	4	4	4
Nitric acid, concentrated	V3738-75	4	4	4	1	1	1	4	4	4	4	1	4	4	4	3	4
Nitric acid, fuming	V3738-75	4	4	4	2	1	1	4	4	4	4	4		4	4	4	4
Nitric acid, red, fuming	V3738-75	4	4	4	2	1	1	4	4	4	4	2	4	4	4	4	4
Nitric acid, red, fuming, with protection agent	V3738-75	4	4	4	2	1	1	4	4	4	4	2	4	4	4	4	4
Nitrobenzene	V0747-75	4	4	4	2	1	1	4	4	4	4	4		4	4	4	4
Nitroethane	E0540-80	4	4	2	4	1	1	2	2	4	4	2	2	2	2	4	4
Nitrogen	C0557-70	1	1	1	1	1	1	1	1	1	1	1		1	1	1	1
Nitrogen tetraoxide(N2O4)	V3860-75	4	4	4	4	1	1	4	4	4	4	4		4	4	4	4
Nitrogen, gaseous	N0674-70	1	1	1	1	1	1	1	1	1	1	1	1	1	1	1	1
Nitrogen, liquid	N0674-70	1	1	1	1	1	1	1	1	1	1	1	1	1	1	1	1
Nitromethane	E0540-80	4	4	2	4	1	1	4	4	4	4	2		3	4	4	4
Nitropropane	E0540-80	4	4	2	4	1	1	4	4	4	4	2	4	4	4	4	4
Nitrous oxide (laughing gas)	E0540-80	1	1	2	1	1	1										1
N-Octane	V0747-75	2	2	4	1	1	1	4	4	4	4	4	4	4	4	2	4
N-Propylacetone	E0540-80	4	4	1	4	1	1	4	4	4	4	1	4	4	4	4	4
O																	
Octachloro toluene	V0747-75	4	4	4	1	1	1	4	4	4	4	4	4	4	4	2	4
Octadecane	N0674-70	1	1	4	1	1	1	2	4	2	1	4	4	4	2	1	4
Octyl alcohol	E0540-80	2	2	1	1	1	1	2	2	4	4	2	2	2	2	2	2
Oleic acid	V3738-75	3	3	4	2	1	1	4	4	4		4	4	4	4		4
Oleum (fuming sulfuric acid)	V0747-75	4	4	4	1	1	1	4	4	4	4	4	4	4	4		4
Oleum spiritus	V0747-75	2	2	4	1	1	1	3	4			4	4	4	4	2	4
Olive oil	N8551-75	1	1	4	1	1	1	3	4	1	1	3		4	3	1	1
Oronite 8200	V0747-75	2	2	4	1	1	1	1	4		1	4	4	4	4	1	4

Tel: +45 63 12 83 00 | Email: ps@hymatik.com | www.hymatik.com | Hvidkaervej 27a, DK-5250 Odense SV, Denmark

11 Appendix

Compatitibility rating[1)]	Parker compound	static and dynamic														static		
		HNBR	NBR	EPDM	FKM	FKM (HiFluor®)	FFKM (Parofluor®)	CR	SBR	ACM	TPU	IIR	BR	NR	CSM (Hypalon)	FVMQ	VMQ
Oronite 8515	V0747-75	2	2	4	1	1	1	1	4		1	4	4	4	4	1	4
Ortho-chloroethylbenzene	V0747-75	4	4	4	1	1	1	4	4	4	4	4	4	4	4	2	4
Ortho-dichlorobenzene	V0747-75	4	4	4	1	1	1	4	4	4	4	4	4	4	4	2	4
OS 45 Typ III (OS45)	V0747-75	2	2	4	1	1	1	1	4		4	4	4	4	2	2	4
OS 45 Typ IV (OS45-1)	V0747-75	2	2	4	1	1	1	1	4		4	4	4	4	2	2	4
OS 70	V0747-75	2	2	4	1	1	1	1	4		4	4	4	4	2	2	4
Oxalic acid	E0540-80	2	2	1	1	1	1	2	2			1	2	2	2	1	2
Oxygen, gaseous, approx. 100200 °C (5)	S0604-70	4	4	4	2	1	1	4	4	4	4	4	4	4	4	4	1
Oxygen, gaseous, cold (4)	C0557-70	2	2	1	1	1	1	1	4	2	1	1	2	2	1	1	1
Ozone	E0540-80	4	4	1	1	1	1	3	4	2	1	2	4	4	1	1	1
P																	
Paint solvent	V3819-75	4	4	4	4	1	1	4	4	4	4	4	4	4	4	4	4
Paint solvent (Phoron)	E0540-80	4	4	1	4	1	1	4	4	4	4	1	4	4	4	4	4
Palmitic acid	N0674-70	1	1	3	1	1	1	3	3	4	4	3		3	3	1	4
Paraffin oil, colourless	N0674-70	1	1	4	1	1	1	1	4	1	1	4		4	1	1	1
Paraffin wax, molten	N0674-70	1	1	4	1	1	1	1	4	1	1	4		4	3	1	1
Parker O-Lube	N0674-70	1	1	4	1	1	1	1	2	1	1	4	4	4	1	1	2
Parker Super-O-Lube	E0540-80	1	1	1	1	1	1	1	1	1	1	1	1	1	1	1	3
p-Cymene	V0747-75	4	4	4	1	1	1	4	4	4	4	4	4	4	4	2	4
Peanut oil	N0674-70	1	1	4	1	1	1	3	4	1	3	4		4	3	1	1
Pentane (N-Pentane)	N0674-70	1	1	4	1	1	1	3	4	1	1	4		4	3	1	4
Perchloric acid	V0747-75	4	4	3	1	1	1	3	4	4	4	3		4	3	3	4
Perchloroethylene	V0747-75	2	2	4	1	1	1	4	4	4	4	4	4	4	4	2	4
Petrolatum (Vaseline)	N0674-70	1	1	4	1	1	1	2	4	1	1	4	4	4	2	1	4
Petroleum	N0674-70	2	1	4	1	1	1	2	4	1	1	4	4	4	4	2	1
Petroleum	V0747-75	1	1	4	1	1	1	3	4	1	3	4		4	3	1	3
Petroleum, below 120 °C	N0674-70	1	1	4	1	1	1	2	4	2	2	4	4	4	2	2	2
Petroleum, crude	N0674-70	1	1	4	1	1	1	2	4	1	1	4	4	4	2	1	4
Phenol	V0747-75	4	4	3	1	1	1	4	4	4	4	3		4	4	3	4
Phenylbenzene	V0747-75	4	4	4	1	1	1	4	4	4	4	4	4	4	4	2	4
Phenylethyl ether	V3819-75	4	4	4	4	1	1	4	4	4	4	4	4	4	4	4	4
Phenylhydrazine	V0747-75	4	4	4	1	1	1	4	3	4	4	4		3	4	2	4
Phoasphoric trichloride	E0540-80	4	4	1	1	1	1	4	4	4	4	1		4	4	2	4
Phoron (paint solvent)	E0540-80	4	4	1	4	1	1	4	4	4	4	1	4	4	4	4	4
Phosphoric acid, 20 %	E0540-80	3	3	1	1	1	1	3	3	4	4	1		3	1	3	3
Phosphoric acid, concentrated	V3738-75	4	4	3	1	1	1	4	4	4	4	3		4	4	4	4
Pickling solution	V3738-75	4	4	3	2	1	1	4	4	4	4	3	4	4	4	4	4
Picric acid, 10 %	C0557-70	3	3	1	1	1	1	1	3	4	4	3		3	1	3	4
Picric acid, aqueous	C0557-70	1	1	1	1	1	1	1	2			1	2	1	1	2	
Picric acid, molten	V3738-75	2	2	2	1	1	1	2	2			2	2	2	2	2	4
Pine oil	N0674-70	1	1	4	1	1	1	4	4			4		4	4	1	
Pine oil	N0674-70	1	1	4	1	1	1	4	4			4	4	4	4	1	4
Pinene	V0747-75	2	2	4	1	1	1	3	4	4	2	4	4	4	4	1	4
Piperidine	V3819-75	4	4	4	4	1	1	4	4	4	4	4		4	4	4	4

Tel: +45 63 12 83 00 | Email: ps@hymatik.com | www.hymatik.com | Hvidkaervej 27a, DK-5250 Odense SV, Denmark

11 Appendix

Compatitibility rating[1)]	Parker compound	static and dynamic													static		
		HNBR	NBR	EPDM	FKM	FKM (HiFluor®)	FFKM (Parofluor®)	CR	SBR	ACM	TPU	IIR	BR	NR	CSM (Hypalon)	FVMQ	VMQ
Plating solution	E0540-80			1	1	1	1	4				1		4	4		4
Polyester plasticizer (Thiokol TP-90B)	E0540-80	4	4	1	1	1	1	2	4			1			2	2	
Polyvinyl acetate emulsion	E0540-80			1		1	1	3				1			3		
Potassium acetate	E0540-80	2	2	1	4	1	1	2	4	4	4	1	4	1	4	4	4
Potassium acetate (acetate of potash)	E0540-80	2	2	1	4	1	1	2	4	4	4	1	4	1	4	4	4
Potassium acetate, aqueous	E0540-80	3	3	1	4	1	1	3	4	4	4	1		1	4	4	4
Potassium chloride, aqueous	N0674-70	1	1	1	1	1	1	1	1	4	4	1		1	1	1	1
Potassium chloride, potash	N0674-70	1	1	1	1	1	1	1	1	1	1	1	1	1	1	1	1
Potassium copper cyanide	N0674-70	1	1	1	1	1	1	1	1	1	1	1	1	1	1	1	1
Potassium cyanide	N0674-70	1	1	1	1	1	1	1	1	1	1	1	1	1	1	1	1
Potassium cyanide, aqueous	N0674-70	1	1	1	1	1	1	1	1	4	4	1		1	1	1	1
Potassium dichromate	N0674-70	1	1	1	1	1	1	1	1	1	2	1	1	1	1	1	1
Potassium dichromate, aqueous	N0674-70	1	1	1	1	1	1	1	3	4	4	1		3	1	1	1
Potassium hydroxide solution, 10 %	E0540-80	3	3	1	4	1	1	3	3	4	4	1		3	1	4	4
Potassium hydroxide solution, 50 %	E0540-80	2	2	1	4	1	1	2	2	4	4	1	2	2	1	3	3
Potassium hydroxide solutions (diluted)	E0540-80	2	2	1	2	1	1	2	2	4	4	1	2	1	1	2	2
Potassium hydroxide, 10 %	E0540-80	2	2	1	4	1	1	2	2	4	4	1		2	1	3	3
Potassium nitrate	N0674-70	1	1	1	1	1	1	1	1	1	1	1	1	1	1	1	1
Potassium perchlorate, aqueous	E0540-80	4	4	1	1	1	1	1	4	4	4	1		4	1	4	4
Potassium salts	N0674-70	1	1	1	1	1	1	1	1	1	1	1	1	1	1	1	1
Potassium sulfate	N0674-70	1	1	1	1	1	1	1	2	4	1	1	1	2	2	1	1
Potassium sulfite	N0674-70	1	1	1	1	1	1	1	2	4	1	1	1	2	2	1	1
Prestoneâ antifreeze	N0674-70	1	1	1	1	1	1	1	1	4	4	1	1	1	1	1	1
Pri High Temo. Hydr. Oil	V0747-75	2	2	4	1	1	1	2	4	1	2	4	4	4	4	1	2
Propane, gas	N0674-70	1	1	4	1	1	1	3	4	1	3	4		4	3	3	4
Propionitrile	N0674-70	1	1	4	1	1	1	2	4	1	4	4	4	4	2	3	4
Propyl acetate	E0540-80	4	4	2	4	1	1	4	4	4	4	2		4	4	4	4
Propyl alcohol (propanol)	N0674-70	1	1	1	1	1	1	1	1	4	4	1	1	1	1	1	1
Propyl nitrate	E0540-80	4	4	2	4	1	1	4	4	4		2	4	4	4	4	4
Propylene (propene)	V0747-75	4	4	4	1	1	1	4	4	4	4	4		4	4	3	4
Propylene oxide	V3819-75	4	4	3	4	1	1	4	4	4	4	3		4	4	4	4
Pydraul 115E	V0747-75	4	4	1	1	1	1	4	4	4	4	1	4	4	4	3	4
Pydraul 230E, 312C, 540C	V0747-75	4	4	4	1	1	1	4	4	4	4	4	4	4	4	4	4
Pydraul, 10E, 29ELT	V0747-75	4	4	1	1	1	1	4	4	4	4	1	4	4	4	4	4
Pydraul, 30E, 50E, 65E, 9	V0747-75	4	4	1	1	1	1	4	4	4	4	1	4	4	4	1	1
Pyranol, Transformer oil (PCB)	N0674-70	1	1	4	1	1	1	2	4	1	2	4	4	4	2	1	4
Pyridine oil	E0540-80	4	4	2	4	2	1	4	4	4	4	2		4	4	4	4
Pyrogard 42, 43, 53, 55 (Phosphate ester, HFDR)	E0540-80	4	4	1	1	1	1	4	4	4	4	1	4	4	4	4	4
Pyrogard C, D	N0674-70	1	1	4	1	1	1	2	4	4	4	4	4	4	4	2	2
Pyroligneous acid	E0540-80	4	4	2	4	1	1	4	4	4	4	2	4	4	4	4	
Pyrolube	V0747-75	4	4	2	1	1	1	4	4	4	4	2	4	4	4	2	2
Pyrrol	S0604-70	4	4	4	4	1	1	4	3	4	4	4		3	4	4	2
Q																	
R																	

Tel: +45 63 12 83 00 | Email: ps@hymatik.com | www.hymatik.com | Hvidkaervej 27a, DK-5250 Odense SV, Denmark

11 Appendix

Compatitibility rating[1)]	Parker compound	static and dynamic														static		
		HNBR	NBR	EPDM	FKM	FKM (HiFluor®)	FFKM (Parofluor®)	CR	SBR	ACM	TPU	IIR	BR	NR	CSM (Hypalon)	FVMQ	VMQ
Rapeseed oil	E0540-80	2	2	1	1	1	1	3	4	1	1	3		4	3	1	1
Raspberry essence (flavoring)	E8743-70	3	3	1	1	1	1									2	1
Red Oil (Mil-H-5606)	N0674-70	1	1	4	1	1	1	2	4	1	1	4	4	4	2	1	4
Refrigerant R 11	N0674-70	2	2	4	4	4	4	3	4			4		4	1		4
Refrigerant R 112	C0557-70	2	2	4	4	2	2	2	4			4		4	2		4
Refrigerant R 113	C0557-70	1	1	4	4	4	4	1	2		1	4		4	1		4
Refrigerant R 114	C0557-70	1	1	1	4	4	4	1	1			1		1			4
Refrigerant R 114 B2	C0557-70	2	2	4	4	4	4	1	4			4		4	1		4
Refrigerant R 115	C0557-70		1	1	4	4	4	1	1			1		1			
Refrigerant R 12	C0557-70	1	1	2	4	4	4	1	1		1	2	4	2	1	4	4
Refrigerant R 12, ASTM oil no. 2, 1:1	C0557-70	2	2	4	4	3	3	2	4			4	4	4	2	2	4
Refrigerant R 12, Suniso 4G, 1:1	C0557-70	2	2	4	4	3	3	2	4			4	4	4	2	2	4
Refrigerant R 13	C0557-70	1	1	1	4	4	4	1	1			1		1	1	4	4
Refrigerant R 13 B1	C0557-70	1	1	1	4	4	4	1	1			1		1	1	2	4
Refrigerant R 134a	C0557-70	1	2	1	4			1									
Refrigerant R 14	C0557-70	1	1	1	4	4	4	1	1		1	1		1	1		4
Refrigerant R 21	C0557-70	4	4	4	4	2	2	2	4			4	4	4	4		4
Refrigerant R 22	C0557-70	4	4	1	4	2	2	1	1	2	4	1		1	1	2	4
Refrigerant R 22, ASTM oil no. 2, 1:1	C0557-70	4	4	4	4	2	2	2	4	2		4		4		2	4
Refrigerant R 31	C0557-70	4	4	1	4	2	2	1	2			1		2	2		
Refrigerant R 32	C0557-70	1	1	1	4	2	2	1	1			1		1	1		
Refrigerant R 502	C0557-70	2	2	1	4	4	4	1	1			1		1			
Ricinus oil	N0674-70	1	1	2	1	1	1	4	1	4	4	2		3	3	1	1
RJ-I (Mil-F-25558)	N0602-70	1	1	4	1	1	1	2	4	1	1	4	4	4	2	1	4
RME (Rapeseed Methyl Ester)	V3736-75	2	3	4	1	1	1	2	4	1	2	4	4	4	3	1	4
RME (Rapeseed Methyl Ester)	V8703-75	2	3	4	1	1	1	2	4	1	2	4	4	4	3	1	4
RME (Rapeseed Methyl Ester)		2	3	4	1	1	1	2	4	1	2	4	4	4	3	1	4
RME, diluted with water (0.20.5 % water)	V8727-70	2	3	4	1	1	1	2	4	1	2	4	4	4	3	1	4
RME, diluted with water (0.20.5 % water)	V8908-80	2	3	4	1	1	1	2	4	1	2	4	4	4	3	1	4
RME, diluted with water (0.20.5 % water)	V8989-80	2	3	4	1	1	1	2	4	1	2	4	4	4	3	1	4
RP-I (Mil-R-25576)	N0602-70	1	1	4	1	1	1	2	4	1	1	4	4	4	2	1	4
S																	
Salicylic acid	E0540-80	2	2	1	1	1	1		2			1	2	1		1	
Santo Safe 300	V0747-75	4	4	3	1	1	1	4	4	4		3	4	4		1	1
SE																	
Sea (salt) water	E0540-80	1	1	1		1	1	2	1	4	4	1	1	1	1	1	1
Sea (salt) water	N0674-70	1	1	1		1	1	2	1	4	4	1	1	1	1	1	1
Shell 3XF Mine Fluid	N0674-70	1	1	4	1	1	1	2	4	4	4	4	4	4	2	1	
Shell Alvania Fat No. 2	N0674-70	1	1	4	1	1	1	3	4	1	1	4		4	4	1	3
Shell Carnea 19 and 29	N0674-70	1	1	4	1	1	1	4	4	1	2	4	4	4	4	1	
Shell Diala	N0674-70	1	1	4	1	1	1	2	4	1	2	4	4	4	4	1	4
Shell Iris 905	N0674-70	1	1	4	1	1	1	2	4	1	1	4	4	4	4	1	4
Shell Lo Hydrax 27 and 29	N0674-70	1	1	4	1	1	1	2	4	1	2	4	4	4	4	1	4
Shell Macoma 72	N0674-70	1	1	4	1	1	1	2	4	1	2	4	4	4	4	1	4

Tel: +45 63 12 83 00 | Email: ps@hymatik.com | www.hymatik.com | Hvidkaervej 27a, DK-5250 Odense SV, Denmark

11 Appendix

Compatitibility rating[1)]	Parker compound	static and dynamic													static		
		HNBR	NBR	EPDM	FKM	FKM (HiFluor®)	FFKM (Parofluor®)	CR	SBR	ACM	TPU	IIR	BR	NR	CSM (Hypalon)	FVMQ	VMQ
Shell Tellus No. 27 (petroleum-based)	N0674-70	1	1	4	1	1	1	2	4	1	1	4	4	4	4	1	4
Shell UMF (5 % aromatic)	N0674-70	1	1	4	1	1	1	2	4	1	1	4	4	4	4	1	4
Silicate esters	V0747-75	2	2	4	1	1	1	1	4		1	4	4	4		1	4
Silicone grease	E0540-80	1	1	1	1	1	1	1	1	1	1	1	1	1	1	1	3
Silicone oils	E0540-80	1	1	1	1	1	1	1	1	1	1	1	1	1	1	1	3
Silver nitrate	E0540-80	2	2	1	1	1	1	1	1	1	1	1	1	1	1	1	1
Silver nitrate, aqueous	E0540-80	3	3	1	1	1	1	1	1	4	4	1		1	1	1	1
Sinclair Opaline CX-EP-Lube	N0674-70	1	1	4	1	1	1	2	4	1	1	4	4	4	2	1	4
Skelly, Solvent B, C, E,	N0674-70	1	1	4	1	1	1	4	4			4	4	4	4	1	
Skydrol 500	E0540-80	4	4	1	4	2	1	4	4	4	4	2	4	4	4	3	3
Skydrol 7000	E0540-80	4	4	1	2	1	1	4	4	4	4	1	4	4	4	3	3
SME (Soy Methyl Ester)	V3736-75	2	3	4	1	1	1	2	4	1	2	4	4	4	3	1	4
SME (Soy Methyl Ester)	V8703-75	2	3	4	1	1	1	2	4	1	2	4	4	4	3	1	4
SME (Soy Methyl Ester)	V8727-70	2	3	4	1	1	1	2	4	1	2	4	4	4	3	1	4
SME (Soy Methyl Ester)	V8908-80	2	3	4	1	1	1	2	4	1	2	4	4	4	3	1	4
SME (Soy Methyl Ester)	V8989-80	2	3	4	1	1	1	2	4	1	2	4	4	4	3	1	4
SME (Soy Methyl Ester)		2	3	4	1	1	1	2	4	1	2	4	4	4	3	1	4
Soap solution, aqueous	E0540-80	1	1	1	1	1	1	3	3	4	4	1		3	1	1	1
Socony Vacuum PD959B	N0674-70	1	1	4	1	1	1	2	4	1	1	4	4	4	2	1	4
Soda Ash (sodium carbonate)	N0674-70	1	1	1	1	1	1	1	1			1	1	1	1	1	1
Sodium acetate	E0540-80	2	2	1	4	1	1	2	4	3	3	1	4	1	4	4	4
Sodium acetate	E0540-80	2	2	1	4	1	1	2	4	3	3	1	4	1	4	4	4
Sodium acetate, aqueous	E0540-80	3	3	1	4	1	1	3	4	4	4	1		1	3	4	4
Sodium bicarbonate (baking soda), (Soda Ash)	N0674-70	1	1	1	1	1	1	1	1			1	1	1	1	1	1
Sodium bisulfate	N0674-70	1	1	1	1	1	1	1	1	4	1	1	1	1	1	1	1
Sodium bisulfite, aqueous	N0674-70	1	1	1	1	1	1	1	3	4	4	1		3	1	1	1
Sodium borate, water-based (Borax)	N0674-70	1	1	1	1	1	1	1	1	4	4	1		1	1	1	1
Sodium carbonate, aqueous (soda)	N0674-70	1	1	1	1	1	1	1	1	4	4	1		1	1	1	1
Sodium chloride, table salt	N0674-70	1	1	1	1	1	1	1	1	4	4	1		1	1	1	1
Sodium cyanide, aqueous	N0674-70	1	1	1	1	1	1	1	1	4	4	1		1	1	1	1
Sodium hydroxide 25 %	E0540-80	3	3	1	4	1	1	1	1	4	4	1		1	1	4	4
Sodium hydroxide, 10 % (sodium hydroxide)	E0540-80	3	3	1	4	1	1	1	1	4	4	1		1	1	4	4
Sodium hypochlorite, 20 %	V0747-75	2	2	2	1	1	1	4	2	4	4	2	2	2	4	2	2
Sodium hypochlorite, aqueous	V0747-75	4	4	3	1	1	1	3	4	4	4	3		4	3	3	3
Sodium metaphosphate (Calgon)	N0674-70	1	1	1	1	1	1	2	1			1	1	1	2	1	
Sodium metasilicate	N0674-70	1	1	1	1	1	1	1	1			1	1	1	1		
Sodium nitrate (nitrate of soda)	E0540-80	2	2	1		1	1	2	2			1	1	2	1		4
Sodium peroxide	E0540-80	2	2	1	1	1	1	2	2	4	4	1	2	2	2	1	4
Sodium phosphate, primary	N0674-70	1	1	1	1	1	1	2	1	1	1	1	1	1	1		4
Sodium phosphate, secondary	N0674-70	1	1	1	1	1	1	2	1	1	1	1	1	1	1		4
Sodium phosphate, tertiary	N0674-70	1	1	1	1	1	1	2	1	1	1	1	1	1	1		1
Sodium salts	N0674-70	1	1	1	1	1	1	2	1	1	1	1	1	1	1	1	1
Sodium silicate	N0674-70	1	1	1	1	1	1	1	1			1	1	1	1		

Tel: +45 63 12 83 00 | Email: ps@hymatik.com | www.hymatik.com | Hvidkaervej 27a, DK-5250 Odense SV, Denmark

11 Appendix

Compatitibility rating[1)]	Parker compound	static and dynamic														static		
		HNBR	NBR	EPDM	FKM	FKM (HiFluor®)	FFKM (Parofluor®)	CR	SBR	ACM	TPU	IIR	BR	NR	CSM (Hypalon)	FVMQ	VMQ
Sodium sulfate, aqueous	N0674-70	1	1	1	1	1	1	1	1	4	4	1		1	1	1	1
Sodium sulfide, aqueous	N0674-70	1	1	1	1	1	1	1	3	4	4	1		3	1	1	1
sodium sulfite	N0674-70	1	1	1	1	1	1	1	2	4	1	1	2	2	1	1	1
Sodium thiosulfate, aqueous (fixing salt)	N0674-70	1	1	1	1	1	1	1	1	4	4	1		1	1	1	1
Sodium, aqueous	E0540-80	3	3	1	1	1	1	3	3	4	4	1		3	3	1	3
Sovasol No. 1, 2, and 3	N0674-70	1	1	4	1	1	1	2	4	2	2	4	4	4	2	1	4
Sovasol No. 73 and 74	V0747-75	2	2	4	1	1	1	2	4	2	2	4	4	4	2	1	4
Soybean oil	N0674-70	1	1	4	1	1	1	3	4	1	2	4		4	3	1	1
Stanno ethyl morpholine	E0540-80	4	4	2	4	1	1		4			2					
Stauffer 7700	V0747-75	2	2	4	1	1	1	4	4	2		4	4	4	4	2	4
Steam above 150 °C	V8545-75	4	4	2	4	2	1	4	4	4	4	4	4	4	4	4	4
Steam up to 150 °C	E0540-80	4	4	1	4	1	1	4	4	4	4	1		4	4	4	4
Stearic acid	N0674-70	2	2	2	1	1	1	3	4	4	4			4	3		2
Stoddard solvent	N0674-70	1	1	4	1	1	1	2	4	1	1	4	4	4	4	1	4
Stoddard solvent	N0674-70	1	1	4	1	1	1	2	4	1	1	4	4	4	4	1	4
Styrene	V3819-75	4	4	4	3	1	1	4	4	4	4	4		4	4	4	4
Succinic acid	N0674-70	1	1	1	1	1	1	1	1	4	4	1		1	1	2	2
sugar cane solution	N0674-70	1	1	1	1	1	1	2	1	4	4	1	1	1	2	1	1
Sulfur	E0540-80	4	4	1	1	1	1	1	4	4		1	4	4		1	
Sulfur chloride	V0747-75	4	4	4	1	1	1	4	4	4		4	4	4	4	1	3
Sulfur dioxide, dry	E0540-80	4	4	1	4	1	1	4	2	4		2	2	2	4	2	2
Sulfur dioxide, wet	E0540-80	4	4	1	4	1	1	2	4	4		1	4	4	3	2	2
Sulfur hexafluoride (SF6)	C0557-70	1	1	1	1	1	1	1	1	2	2	1		2	1	1	1
Sulfur lye	V3738-75	2	2	2	1	1	1	2	2	4		2	2	2	2	2	4
Sulfur trioxide, dry	V0747-75	4	4	2	1	1	1	4	4	4	4	2	2	4	4	3	3
Sulfur, molten	V0747-75	4	4	4	1	1	1	4	4	4	4	4		4	4	4	4
Sulfuric acid 96 %	V3738-75	4	4	4	1	1	1	4	4	4	4	4		4	4		4
Sulfuric acid, 3 molar	V0747-75	4	4	2	1	1	1	3	3	2	3	3	3	3	3	3	4
Sulfuric acid, concentrated	V3738-75	4	4	4	1	1	1	4	4	4	4	4	4	4	4	4	4
Sulfuric acid, smoking (20/25 % oleum)	V3738-75	4	4	4	1	1	1	4	4	4	4	4	4	4	4		4
Sulfurous acid	V0747-75	3	3	1	1	1	1	3	3	4	4	1		3	1	4	4
Sunoco No. 3661	N0674-70	1	1	4	1	1	1	2	4	1	1	4	4	4	2	1	4
Sunoco SAE 10	N0674-70	1	1	4	1	1	1	2	4	1	1	4	4	4	2	1	4
Sunoco, all available fats	N0674-70	4	1	4	1	1	1	2	4	1	1	4	4	4	2	1	4
Sunsafe (fire resistant hydraulic fluid)	N0674-70	1	1	4	1	1	1	2	4	4	4	4	4	4	2	1	
Super gasoline	N0674-70	1	1	4	1	1	1	2	4	2	2	4	4	4	4	2	4
Super shell gasoline	N0674-70	1	1	4	1	1	1	2	4	2	2	4	4	4	4	2	4
Swan Finch EP Lube	N0674-70	1	1	4	1	1	1	4	4	1	1	4	4	4	4	1	4
Swan Hypoid-90	N0674-70	1	1	4	1	1	1	2	4	1	1	4	4	4	4	1	4
Table salt, aqueous	N0674-70	1	1	1	1	1	1	1	1	4	4	1		1	1	1	1
Tannic acid	N0674-70	1	1	1	1	1	1	1	1	4	4	1		1	1	1	1
Tannic acid, 10 %	N0674-70	1	1	1	1	1	1	1	2	4		1	1	1	1		2
Tannic acid, tannin	N0674-70	1	1	1	1	1	1	2	2	4		1	2	1	2		2

Tel: +45 63 12 83 00 | Email: ps@hymatik.com | www.hymatik.com | Hvidkaervej 27a, DK-5250 Odense SV, Denmark

11 Appendix

Compatitibility rating[1)]	Parker compound	static and dynamic													static		
		HNBR	NBR	EPDM	FKM	FKM (HiFluor®)	FFKM (Parofluor®)	CR	SBR	ACM	TPU	IIR	BR	NR	CSM (Hypalon)	FVMQ	VMQ
Tar (bituminous)	V0747-75	2	2	4	1	1	1	3	4	4		4	4	3	4	1	2
Tar oil, carbolineum	N0674-70	1	1	4	1	1	1	2	4	1	3	4	4	4	4	1	4
Tartaric acid, aqueous	N0674-70	1	1	1	1	1	1	1	1	4	4	1		1	1	1	1
Tea	E0540-80	1	1	1		1	1										
Terpineol	V0747-75	2	2	3	1	1	1	4	4			3	4	4	4	1	
Tertiary butyl alcohol	V0747-75	2	2	2	1	1	1	2	2	4	4	2	2	2	2	2	2
Tertiary butyl mercaptan	V0747-75	4	4	4	1	1	1	4	4	4		4	4	4	4		4
Tetrabromomethane	V0747-75	4	4	4	1	1	1	4	4	4	4	4		4	4	3	4
Tetrabutyl titanate	E0540-80	2	2	1	1	1	1	2	2			2	2	2	1	1	
Tetrachloroethane	V3819-75	4	4	4	3	1	1	4	4	4	4	4		4	4	4	4
Tetrachloroethylene	V0747-75	4	4	4	1	1	1	4	4	4	4	4	4	4	4	2	4
Tetraethyl lead	V0747-75	3	3	4	1	1	1	4	4	4	4	4		4	4	3	4
Tetraethyl lead blend	V0747-75	2	2	4	1	1	1	4	4			4	4	4	4	2	
Tetrahydrofuran (THF)	E0540-80	4	4	2	4	2	1	4	4	4		2	4	4	4		
Tetralin	V0747-75	4	4	4	1	1	1	4	4			4	4	4	4	1	4
Texaco 3450 (transmission oil)	N0674-70	1	1	4	1	1	1	4	4	1	1	4	4	4	4	1	4
Texaco Capella A and AA	N0674-70	1	1	4	1	1	1	2	4	1	2	4	4	4	4	1	4
Texaco Regal B	N0674-70	1	1	4	1	1	1	4	4	1	1	4	4	4	4	1	4
Texaco Uni-Temp. lubricant	N0674-70	1	1	4	1	1	1	2	4	1	1	4	4	4	4	1	2
Texamatic 1581 Fluid	N0674-70	1	1	4	1	1	1	2	4	1	2	4	4	4	4	2	4
Texamatic 3401 Fluid	N0674-70	1	1	4	1	1	1	2	4	1	2	4	4	4	4	2	4
Texamatic 3525 Fluid	N0674-70	1	1	4	1	1	1	2	4	1	2	4	4	4	4	2	4
Texamatic 3528 Fluid	N0674-70	1	1	4	1	1	1	2	4	1	2	4	4	4	4	2	4
Texamatic A transmission oil	N0674-70	1	1	4	1	1	1	2	4	1	2	4	4	4	4	2	4
Texas 1500 oil	N0674-70	1	1	4	1	1	1	2	4	1	1	4	4	4	4	1	2
Thiokol TP-90B (polyester plasticizer)	E0540-80	4	4	1	1	1	1	2	4			1			2	2	
Thiokol TP-95	E0540-80	4	4	1	1	1	1	2	4			1			2	2	
Tidewater Multigear 140, EP-Lube	N0674-70	1	1	4	1	1	1	2	4	1	1	4	4	4	2	1	4
Tidewater Oil-Beedol	N0674-70	1	1	4	1	1	1	2	4	1	1	4	4	4	4	1	2
Tin (II) chloride	N0674-70	1	1	1	1	1	1	1	1			1	1	1	1	1	2
Tin (IV) chloride	N0674-70	1	1	1	1	1	1	4	1			1	1	1	4	1	2
Tin (IV) chloride, 50 %	N0674-70	1	1	1	1	1	1	4	1			1	1	1	4	1	2
Tin chloride, aqueous	N0674-70	1	1	1	1	1	1	1	1	4	4	1		1	1	1	1
Titanium tetrachloride	V0747-75	2	2	4	1	1	1	4	4	4	4	4	4	4	4	2	4
Toluene	V0747-75	4	4	4	1	1	1	4	4	4	4	4		4	4	3	4
Toluene diisocyanate	E0540-80	4	4	2	4	1	1	4	4	4	4	2		4	4	4	4
Transformer oil	N0674-70	1	1	4	1	1	1	2	4	2	1	4	4	4	4	1	2
Transformer oils (petroleum-based)	N0674-70	1	1	4	1	1	1	3	4	3	1	4		4	4	1	3
Transmission Oil Type A	N3813-70	1	1	4	1	1	1	2	4	1	1	4	4	4	2	1	2
Triacetin	E0540-80	2	2	1	4	1	1	2	3	4	4	1	2	2	2	4	
Triarylphosphate	E0540-80	4	4	1	1	1	1	4	4	4	4	1	4	4	4	2	3
Tributoxyethyl phosphate	E0540-80	4	4	1	1	1	1	4	2	4	4	1	2	2	4	2	
Tributyl mercaptan	V0747-75	4	4	4	1	1	1	4	4	4		4	4	4	4	3	4
Tributyl phosphate	E0540-80	4	4	1	4	1	1	4	4	4	4	1		3	4	4	4

Tel: +45 63 12 83 00 | Email: ps@hymatik.com | www.hymatik.com | Hvidkaervej 27a, DK-5250 Odense SV, Denmark

11 Appendix

Compatitibility rating[1)]	Parker compound	static and dynamic														static		
		HNBR	NBR	EPDM	FKM	FKM (HiFluor®)	FFKM (Parofluor®)	CR	SBR	ACM	TPU	IIR	BR	NR		CSM (Hypalon)	FVMQ	VMQ
Trichloroacetic acid	E0540-80	2	2	2	3	1	1	3	3	4	4	2		4		3	4	4
Trichloroethane	V0747-75	4	4	4	1	1	1	4	4	4	4	4	4	4		4	2	4
Trichloroethylene (Tri)	V0747-75	4	4	4	1	1	1	4	4	4	4	4		4		4	3	4
Trichloromethane (chloroform)	V0747-75	4	4	4	1	1	1	4	4	4	4	4	4	4		4	2	4
Tricresyl phosphate (ester) (TCP)	E0540-80	4	4	1	1	1	1	4	4	4	4	1		4		4	3	1
Triethanolamine	E0540-80	3	3	2	4	2	1	2	2	4	4	2	2	2		2	4	
Trifluoroethane	V0747-75	4	4	4	1	1	1	4	4	4	4	4	4	4		4	2	4
Trinitrotoluene	V0747-75	4	4	4	2	1	1	3	4			4		4		3	3	
Trioctylphosphate (ester)	E0540-80	4	4	1	3	1	1	4	4	4	4	1		4		4	3	4
Tripolyphosphate	E0540-80	4	4	1	2	1	1	3	4	4	4	1	4	4		4	1	3
Tung oil (Chinese wood oil)	N0674-70	1	1	4	1	1	1	2	4		3	3	4	4		3	2	4
Turbine oil	N0674-70	1	1	4	1	1	1	4	4	1	1	4	4	4		4	1	4
Turbine oil no. 15 (Mil-L-7808)	V0747-75	2	2	4	1	1	1	4	4	2	4	4	4	4		4	2	4
Turbine oil no. 35	N0674-70	1	1	4	1	1	1	2	4	1	1	4	4	4		4	1	4
Turpentine	N0674-70	1	1	4	1	1	1	4	4	3	4	4		4		4	2	4
U																		
Ucon Fat 50-HB-100	N0674-70	1	1	1	1	1	1	1	1			1	1	1		1	1	1
Ucon Fat 50-HB-260	N0674-70	1	1	1	1	1	1	1	1			1	1	1		1	1	1
Ucon Fat 50-HB-5100	N0674-70	1	1	1	1	1	1	1	1			1	1	1		1	1	1
Ucon Fat 50-HB-55	N0674-70	1	1	1	1	1	1	1	1			1	1	1		1	1	1
Ucon Fat 50-HB-660	N0674-70	1	1	1	1	1	1	1	1			1	1	1		1	1	1
Ucon Fat LB-1145	N0674-70	1	1	1	1	1	1	1	1			1	1	1		1	1	1
Ucon Fat LB-135	N0674-70	1	1	1	1	1	1	1	1			1	1	1		1	1	1
Ucon Fat LB-285	N0674-70	1	1	1	1	1	1	1	1			1	1	1		1	1	1
Ucon Fat LB-300X	N0674-70	1	1	1	1	1	1	1	1			1	1	1		1	1	1
Ucon Fat LB-625	N0674-70	1	1	1	1	1	1	1	1			1	1	1		1	1	1
Ucon Fat LB-65	N0674-70	1	1	1	1	1	1	1	2			1	2	2		2	1	1
Ucon Hydrolube J-4	N0674-70	1	1	1	1	1	1	2	1	4	4	1	2				2	1
Ucon Oil 50-HB-280X	N0674-70	1	1	1	1	1	1	1	1			1	1	1		1	1	1
Ucon Oil LB-385	N0674-70	1	1	1	1	1	1	1	1			1	1	1		1	1	1
Ucon Oil LB-400X	N0674-70	1	1	1	1	1	1	1	1			1	1	1		1	1	1
Univis 40 (hydraulic fluid)	N0674-70	1	1	4	1	1	1	2	4	1	1	4	4	4		2	1	4
Unsym. dimethyl hydrazine (UDMH)	E0540-80	2	2	1	4	1	1	2	2			1	1	1		1	4	4
Urea, aqueous	N0674-70	1	1	1	1	1	1	1	1	4	4	1		1		1	1	1
V																		
Varnish	V0747-75	2	2	4	1	1	1	4	4	4	3	4	4	4		4	2	4
Vaseline	N0674-70	1	1	4	1	1	1	3	4	1	1	4		4		3	1	1
Vegetable oils	N0674-70	1	1	4	1	1	1	3	4	1	1	4		4		3	1	1
Versilube F-50	E0540-80	1	1	1	1	1	1	1	1	1	1	1	1	1		1	1	3
Vinegar	E0540-80	3	3	1	4	1	1	3	3	4	4	1		1		3	4	1
Vinylacetylene	E0540-80	1	1	1	1	1	1	2	2			1	2	2		2		2
VV-H-910	E0540-80	3	3	1	1	1	1	2		4	4	2	2	2		2	2	2
W																		
Wagner 21B brake fluid	E0540-80	3	3	1	4	1	1	2	1			2				2	4	3

Tel: +45 63 12 83 00 | Email: ps@hymatik.com | www.hymatik.com | Hvidkaervej 27a, DK-5250 Odense SV, Denmark

11 Appendix

Compatitibility rating[1)]	Parker compound	static and dynamic													static		
		HNBR	NBR	EPDM	FKM	FKM (HiFluor®)	FFKM (Parofluor®)	CR	SBR	ACM	TPU	IIR	BR	NR	CSM (Hypalon)	FVMQ	VMQ
Waste water	N0674-70	1	1	1	1	1	1	2	1	4	4	1	2	1	1	1	1
Water (process water) up to 100 °C	E0540-80	1	2	1	2	1	1	3	2	4	4	1	2	3	3	3	2
Water (process water) up to 70 °C	N0674-70	1	1	1	2	1	1	2	1	4	4	1	1	1	1	1	1
Water / oil mixture	VG292-70	2	3	4	1	1	1					4	4	4		2	4
Water glycol mixture (30 % / 70 %)	E0540-80	2	2	1	2	1	1									2	
Water, heavy (deuterium oxide)	N0674-70	1	1	1		1	1	2	1	4	4	1	1	1	1	1	1
Wemco C	N0674-70	1	1	4	1	1	1	2	4	1	1	4	4	4	4	1	4
Whiskey	N8551-75	1	1	1	1	1	1	1	1	4	4	1		1	1	1	1
Wine, white wine, red wine	N8551-75	1	1	1	1	1	1	1	1	4	4	1		1	1	1	1
Wodman salt® (impregnation of wood)	N0674-70	1	1	1	1	1	1	2	1	2	1	1	1	1	1	1	1
Wood alcohol (methanol)	N0674-70	1	1	1	4	1	1	1	1	4	4	1	1	1	1	1	1
Wood oil (tung oil)	N0674-70	1	1	4	1	1	1	3	4	1	3	4		4	4	3	4
wort	N8551-75	1	1	3	1	1	1			4	4			4		2	1
X																	
Xenon	N0674-70	1	1	1	1	1	1	1	1	1	1	1		1	1	1	1
Xylene	V0747-75	4	4	4	1	1	1	4	4	4	4	4		4	4	1	4
Xylidine (mixture of aromatic amines)	V8920-75	3	3	4	4	1	1	4	4	4	4	4	4	4	4	4	4
Yeast, aqueous	N0674-70	1	1	1	1	1	1	1	1	4	4	1		1	1	1	1
Z																	
Zeolite	N0674-70	1	1	1	1	1	1	1	1			1	1	1	1	1	
Zinc acetate	E0540-80	2	2	1	4	1	1	2	4	4	4	1	4	1	4	4	4
Zinc chloride	N0674-70	1	1	1	1	1	1	1	1	4		1	1	1	1	1	
Zinc salts	N0674-70	1	1	1	1	1	1	1	1	4	1	1	1	1	1	1	1
Zinc sulfate	N0674-70	1	1	1	1	1	1	1	2	4		1	2	2	1	1	1

[1)] Compatibility rating: 1 = satisfactory, 2 = fair, 3 = conditional, 4 = unsatisfactory, empty space = insufficient data

Tab. 11.4 Media Compatibility Table

Tel: +45 63 12 83 00 | Email: ps@hymatik.com | www.hymatik.com | Hvidkaervej 27a, DK-5250 Odense SV, Denmark

11.4 O-Ring Product Series on www.parker.com

Product Series	Compound
Polychloroprene rubber O-ring, 70 Shore A, Praedifa series, for industrial refrigeration, black, (Praedifa series C0557-70)	C0557-70
Polychloroprene rubber O-ring, 70 Shore A, Praedifa series, for industrial refrigeration, black, (Praedifa series C0944-70)	C0944-70
Ethylene propylene rubber O-ring, 60 Shore A, broad applicability, black (Praedifa series E0529-60)	E0529-60
Ethylene propylene rubber O-ring, 80 Shore A, broad applicability, black (Praedifa series E0540-80)	E0540-80
Ethylene propylene rubber O-ring, 70 Shore A, broad applicability, black (Praedifa series E3609-70)	E3609-70
Ethylene propylene rubber O-ring, 80 Shore A, broad applicability, Purple (Praedifa series E3678-80)	E3678-80
Ethylene propylene rubber Parbak® (back-up ring) compound, 90 Shore A, broad applicability (Praedifa series E3804-90)	E3804-90
Ethylene probylene rubber O-ring, 70 Shore A, for automotive applications, black (Praedifa series E8556-70)	E8556-70
Fully fluorinated Fluorocarbon O-ring, 80 Shore A, excellent cold flexibility, black (Praedifa series FF400-80, Parofluor®)	FF400-80
Fluorosilicone rubber O-ring, 70 Shore A, for demanding applications, blue coloring (Praedifa series L0677-70)	L0677-70
Fluorosilicone rubber O-ring, 80 Shore A, for demanding applications, blue coloring (Praedifa series L0806-80)	L0806-80
Fluorosilicone rubber O-ring, 70 Shore A, for couplings and quick connects, yellow coloring (Praedifa series L3355-70)	L3355-70
Fluorosilicone rubber O-ring, 70 Shore A, for couplings and quick connects, blue coloring (Praedifa series L8559-70)	L8559-70
Fluorosilicone rubber O-ring, 80 Shore A, for demanding applications, blue coloring (Praedifa series L8585-80)	L8585-80
Back-up ring Praedifa series N0300-90, nitrile-butadiene rubber, 90 Shore A, broad applicability, black, Parbak®	N0300-90
Nitrile-butadiene rubber O-ring, 60 Shore A, broad applicability, black, (Praedifa series N0525-60)	N0525-60
Nitrile-butadiene rubber O-ring, 90 Shore A, broad applicability, black, (Praedifa series N0552-90)	N0552-90
Nitrile-butadiene rubber O-ring, 70 Shore A, broad applicability, black, (Praedifa series N0674-70)	N0674-70
Nitrile-butadiene rubber O-ring, 50 Shore A, broad applicability, black, (Praedifa series N3505-50)	N3505-50
Hydrogenated nitrile-butadiene rubber O-ring, 85 Shore A, broad applicability, black, (Praedifa series N3510-85)	N3510-85
Hydrogenated nitrile-butadiene rubber O-ring, 90 Shore A, broad applicability, black, (Praedifa series N3512-90)	N3512-90
Hydrogenated nitrile-butadiene rubber O-ring, 75 Shore A, broad applicability, Green, (Praedifa series N3554-75)	N3554-75
Hydrogenated nitrile-butadiene rubber O-ring, 75 Shore A, broad applicability, black, (Praedifa series N3573-75)	N3573-75
Nitrile-butadiene rubber O-ring, 75 Shore A, broad applicability, black, (Praedifa series N3575-75)	N3575-75
Nitrile-butadiene rubber O-ring, 80 Shore A, broad applicability, black, (Praedifa series N3578-80)	N3578-80
Hydrogenated nitrile-butadiene rubber O-ring, 80 Shore A, broad applicability, black, (Praedifa series N3723-80)	N3723-80
Hydrogenated nitrile-butadiene rubber O-ring, 80 Shore A, broad applicability, black, (Praedifa series N3813-70)	N3813-70
Hydrogenated nitrile-butadiene rubber O-ring, 70 Shore A, broad applicability, black, (Praedifa series N3831-70)	N3831-70
Hydrogenated nitrile-butadiene rubber O-ring, 85 Shore A, general purpose, green, (Praedifa series N3837-85)	N3837-85
Hydrogenated nitrile-butadiene rubber O-ring, 70 Shore A, broad applicability, green, (Praedifa series N8505-70)	N8505-70
Hydrogenated nitrile-butadiene rubber O-ring, 90 Shore A, general purpose, black, (Praedifa series N8680-90)	N8680-90
Silicone rubber O-ring, 50 Shore A, general purpose, red coloring (Praedifa series S0595-50)	S0595-50
Silicone rubber O-ring, 70 Shore A, general purpose, red coloring (Praedifa series S0604-70)	S0604-70
Silicone rubber O-ring, 60 Shore A, general purpose, red coloring (Praedifa series S0613-60)	S0613-60
Silicone rubber O-ring, 80 Shore A, general purpose, red coloring (Praedifa series S0614-80)	S0614-80
Liquid silicone rubber O-ring, 50 Shore A, general purpose, reddish brown coloring (Praedifa series S3693-50)	S3693-50
Liquid silicone rubber O-ring, 60 Shore A, general purpose, reddish brown coloring (Praedifa series S3695-60)	S3695-60
Liquid silicone rubber O-ring, 40 Shore A, general purpose, reddish brown coloring (Praedifa series S3697-40)	S3697-40

Tel: +45 63 12 83 00 | Email: ps@hymatik.com | www.hymatik.com | Hvidkaervej 27a, DK-5250 Odense SV, Denmark

11 Appendix

Product Series	Compound
Liquid silicone rubber O-ring, 70 Shore A, general purpose, reddish brown coloring (Praedifa series S3698-70)	S3698-70
Fluorocarbon O-Ring, 90 Shore A, general purpose (Praedifa series V0709-90)	V0709-90
Back-up ring Praedifa series V0709-90, fluoroelastomer, 90 Shore A, broad applicability, black, Parbak®	V0709-90PDE
Fluorocarbon O-Ring, 75 Shore A, general purpose (Praedifa series V0747-75)	V0747-75
Fluorocarbon O-Ring, 75 Shore A, for Semicon (Praedifa series V0747S310)	V0747S310
Fluorocarbon O-Ring, 60 Shore A, general purpose (Praedfia series V0763-60)	V0763-60
Fluorocarbon O-Ring, 75 Shore A, broad range (Prädifa Serie V0884-75)	V0884-75
Fluorocarbon O-ring, 75Shore A, improved media resistance (Praedifa series V3642-75)	V3642-75
Fluorocarbon O-ring, 70 Shore A, general purpose (Praedifa series V3670-70)	V3670-70
Fluorocarbon O-ring, 80 Shore A, general purpose (Praedifa series V3681-80)	V3681-80
Fully fluorinated fluorocarbon O-ring, 75 Shore A (Praedifa series V8545-75, Parofluor®)	V8545-75
Fully fluorinated fluorocarbon O-ring, 75 Shore A, (Praedifa series V8562-75, Parofluor®)	V8562-75
Fluorocarbon O-Ring, 75 Shore A, with very good cold flexibility (Praedifa series V8703-75)	V8703-75
Parofluor® O-ring, 75 Shore A, excellent overall media and solvent stability, black (Praedifa series V8787-75, Parofluor®)	V8787-75
Fully fluorinated fluorocarbon O-ring, 75 Shore A, with excellent media resistance, black(Praedifa series V8920-75, Parofluor®)	V8920-75
Fully fluorinated fluorocarbon O-ring, 75 Shore A, with excellent media resistance, white(Praedifa series V8921-75, Parofluor®)	V8921-75
Fully fluorinated fluorocarbon O-ring, 75 Shore A (Praedifa series V8930-75, Parofluor®)	V8930-75
Fully fluorinated fluorocarbon O-ring, 75 Shore A (Praedifa series V8950-75, Parofluor®)	V8950-75
Fluorocarbon O-ring, 83 Shore A, for demanding fuel injector systems (Praedifa series V8989-80)	V8989-80

Tel: +45 63 12 83 00 | Email: ps@hymatik.com | www.hymatik.com | Hvidkaervej 27a, DK-5250 Odense SV, Denmark

Tel: +45 63 12 83 00 | Email: ps@hymatik.com | www.hymatik.com | Hvidkaervej 27a, DK-5250 Odense SV, Denmark

Parker Hannifin Corporation
Prädifa Technology Division
P.O. Box 1641
74306 Bietigheim-Bissingen
Germany
phone +49 7142 351-0
www.parker.com/praedifa
e-mail: praedifa@parker.com

PTD 5705 EN · PDF · 09/2025

© 2025 Parker Hannifin Corporation • Subject to change.

Tel: +45 63 12 83 00 | Email: ps@hymatik.com | www.hymatik.com | Hvidkaervej 27a, DK-5250 Odense SV, Denmark