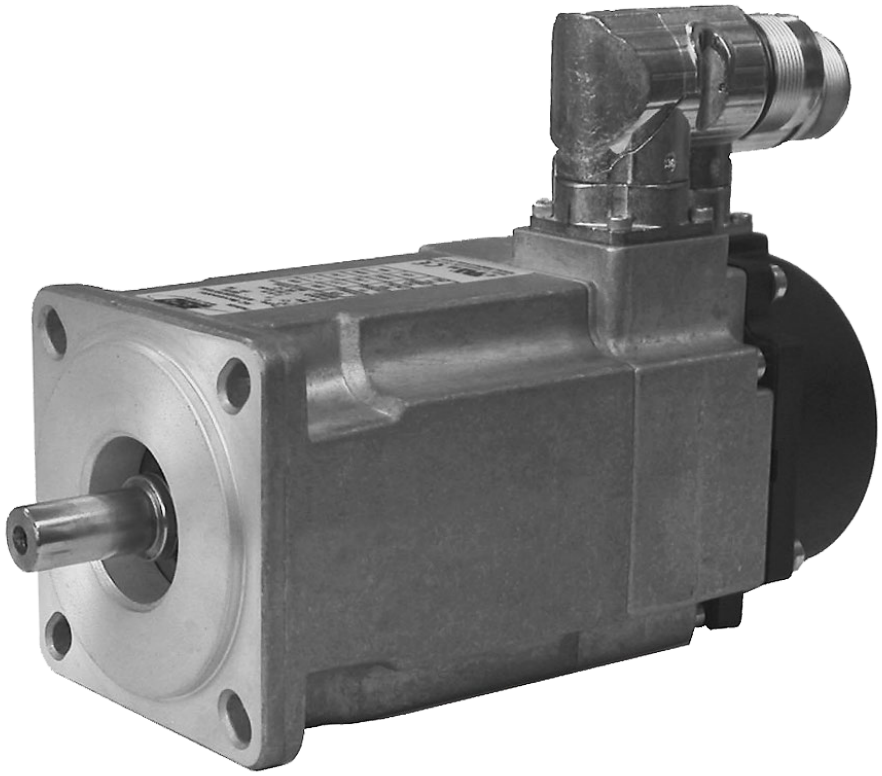

LOW-COGGING SERVO MOTOR SERIES NX

Tel: +45 63 12 83 00 | Email: ps@hymatik.com | www.hymatik.com | Hvidkaervej 27a, DK-5250 Odense SV, Denmark

WARNING — USER RESPONSIBILITY

FAILURE OR IMPROPER SELECTION OR IMPROPER USE OF THE PRODUCTS DESCRIBED HEREIN OR RELATED ITEMS CAN CAUSE DEATH, PERSONAL INJURY AND PROPERTY DAMAGE.

- This document and other information from Parker-Hannifin Corporation, its subsidiaries and authorized distributors provide product or system options for further investigation by users having technical expertise.
- The user, through its own analysis and testing, is solely responsible for making the final selection of the system and components and assuring that all performance, endurance, maintenance, safety and warning requirements of the application are met. The user must analyze all aspects of the application, follow applicable industry standards, and follow the information concerning the product in the current product catalog and in any other materials provided from Parker or its subsidiaries or authorized distributors.
- To the extent that Parker or its subsidiaries or authorized distributors provide component or system options based upon data or specifications provided by the user, the user is responsible for determining that such data and specifications are suitable and sufficient for all applications and reasonably foreseeable uses of the components or systems.

Tel: +45 63 12 83 00 | Email: ps@hymatik.com | www.hymatik.com | Hvidkaervej 27a, DK-5250 Odense SV, Denmark

Content

Overview 5
Technical Data 6
Matching Drives 8
Dimensions 9
Ordfering Code 11
Accessories and Options 12



If you have questions about the products contained in this catalog, or their applications, please contact:
Parker Hannifin EMEA Sàrl European Headquarters
parker.com/msge

Tel: +45 63 12 83 00 | Email: ps@hymatik.com | www.hymatik.com | Hvidkaervej 27a, DK-5250 Odense SV, Denmark

Tel: +45 63 12 83 00 | Email: ps@hymatik.com | www.hymatik.com | Hvidkaervej 27a, DK-5250 Odense SV, Denmark

LOW-COGGING SERVO MOTOR - SERIES NX

Overview

NX Series brushless servomotors from Parker combine exceptional precision and motion quality, high dynamic performance and very compact dimensions.
A large set of torque / speed characteristics, options and customization possibilities are available, making NX Series servomotors the ideal solution for most servosystems applications.

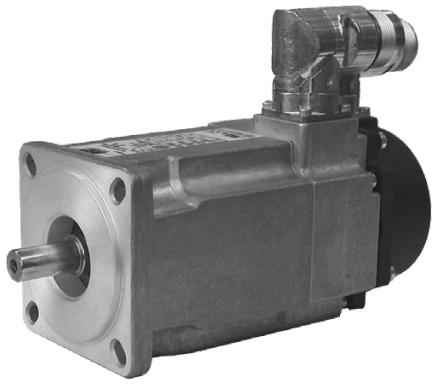

Advantages

- High precision and motion quality
- High dynamic performance
- Compact robust
- Large set of options and customization
- possibilities
- CE and UL marking certification available

Applications

- Life Science Diagnostic
- Tooling Machines
- Pulp & Paper
- Renewable Energy
- Aerospace
- Marine
- Continuous Process
- Mobile Hybrid Solutions

Features

- Mounting
  - Flange with clearance holes
- Shaft end
  - Plain smooth shaft (standard)
  - Plain keyed shaft (option)
- Cooling
  - Natural ventilation
  - Forced ventilation (NX860V only)
- Feedback sensors
  - Resolver (standard)
  - Absolute Hiperface encoder
  - Incremental encoder
- Other options
  - Brake
  - Thermal protection (PTC or KTY)

Technical Characteristics - Overview

Motor type		Permanent magnet synchronous servomotors	
Rotor design		Rotor with concentrated-flux rare earth magnets	
Number of poles		10	
Torque range	[Nm]	2...64	
Speed range	[min^{-1}]	0...7000	
Protection level (IEC60034-5)		• IP64 (Standard) • IP65 (Option) • IP44 (ventilated version)	
Marking		CE	UL
Voltage supply	[VAC]	230/400	230/480
Temperature class (IEC60034-1)		Class F	
Connections		• Connectors (standard) • Flying cables (option) • Terminal box (option)	• Connectors (NX3-8)

Tel: +45 63 12 83 00 | Email: ps@hymatik.com | www.hymatik.com | Hvidkaervej 27a, DK-5250 Odense SV, Denmark

Torque/Speed Curve

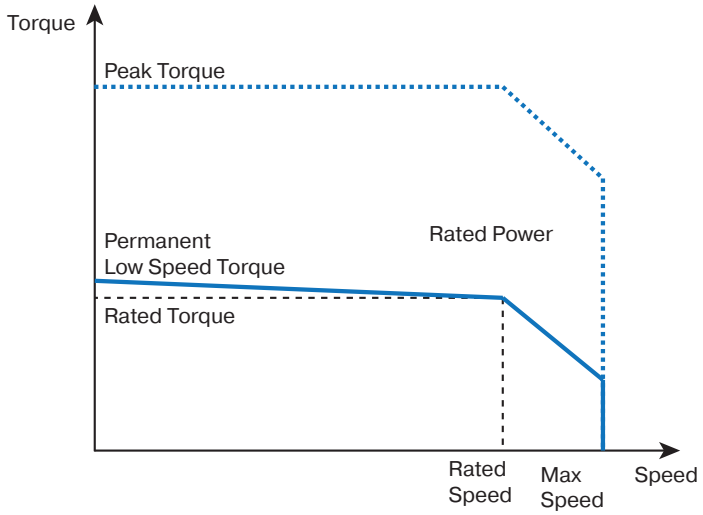

Technical Data

Motor	Size	Stall (1)		Nominal (1)			Peak Torque (1)	Inertia		Ke (2) (3)	Kt (2) (3)
		Torque	Current	Torque	Speed	Current		No brake	With brake		
		T_0 [Nm]	I_0 [A]	T_n [Nm]	n [min^{-1}]	I_n [A]	T_{max} [Nm]	J [$kgmm^2$]	J [$kgmm^2$]	Ke [Vs]	Kt [Nm/A_{rms}]
230 VAC power supply - single or three-phased											
NX310EAP	71	2	1.4	1.80	2300	1.27	6.6	80	87	88.9	1.440
NX310EAK	71	2	2.4	1.65	4000	2.06	6.6	80	87	50.9	0.823
NX420EAP	91.5	4	2.7	3.53	2300	2.41	13.4	290	308	89.9	1.480
NX420EAJ	91.5	4	4.7	3.14	4000	3.74	13.4	290	308	51.9	0.853
NX430EAL	91.5	5.5	3.8	5.04	2300	3.49	18.7	430	448	90.9	1.450
NX430EAF	91.5	5.5	6.6	4.29	4000	5.28	18.7	430	448	51.8	0.828
NX620EAV	121	8	2.8	7.85	1100	2.79	26.6	980	1 034	180.0	2.830
NX620EAR	121	8	5.3	7.42	2200	4.99	26.6	980	1 034	95.7	1.510
NX630EAR	121	12	5.3	10.70	1450	4.75	39.9	1 470	1 524	138.0	2.290
NX630EAN	121	12	7.9	9.81	2300	6.63	39.9	1 470	1 524	91.6	1.510
NX820EAR	155	16	11.0	14.50	2200	10.00	49.9	3 200	3 756	91.0	1.460
NX840EAK	155	28	16.8	23.50	2000	14.30	91.8	6 200	6 756	104.0	1.670
NX860EAJ	155	41	18.5	35.60	1450	16.20	136.0	9 200	9 756	140.0	2.210
230 VAC power supply - three-phased - fan cooled											
NX860VAF	155	64	42.7	56.40	2000	37.50	136.0	9 200	9 756	96.1	1.500

* Mounting on aluminium flange: 400 x 400 x 12 mm (NX3-8) Temperature <40 °C near motor's flange

Tel: +45 63 12 83 00 | Email: ps@hymatik.com | www.hymatik.com | Hvidkaervej 27a, DK-5250 Odense SV, Denmark

Technical Data

Motor	Size	Stall [1]		Nominal [1]			Peak Torque [1]	Inertia		Ke [2] [3]	Kt [2] [3]
		Torque	Current	Torque	Speed	Current		No brake	With brake		
		T_0 [Nm]	I_0 [A]	T_n [Nm]	n [min^{-1}]	I_n [A]	T_{max} [Nm]	J [$kgmm^2$]	J [$kgmm^2$]	Ke [Vs]	Kt [Nm/A_{rms}]
400 VAC power supply - single or three-phased											
NX310EAP	71	2	1.4	1.65	4000	1.2	6.6	80	87	88.9	1.440
NX310EAK	71	2	2.4	1.36	7000	1.8	6.6	80	87	50.9	0.823
NX420EAP	91.5	4	2.7	3.14	4000	2.2	13.4	290	308	89.9	1.480
NX420EAJ	91.5	4	4.7	2.62	6000	3.2	13.4	290	308	51.9	0.853
NX430EAL	91.5	5.5	3.8	4.29	4000	3.0	18.7	430	448	90.9	1.450
NX430EAF	91.5	5.5	6.6	2.98	6000	3.8	18.7	430	448	51.8	0.828
NX620EAV	121	8	2.8	7.52	2000	2.7	26.6	980	1 034	180.0	2.830
NX620EAR	121	8	5.3	6.17	3900	4.3	26.6	980	1 034	95.7	1.510
NX630EAR	121	12	5.3	9.34	2700	4.2	39.9	1 470	1 524	138.0	2.290
NX630EAN	121	12	7.9	7.6	4000	5.3	39.9	1 470	1 524	91.6	1.510
NX820EAR	155	16	11.0	12.9	3900	9.1	49.9	3 200	3 756	91.0	1.460
NX840EAK	155	28	16.8	18.6	3500	11.5	91.8	6 200	6 756	104.0	1.670
NX860EAJ	155	41	18.5	27.5	2600	12.7	136.0	9 200	9 756	140.0	2.210
400 VAC power supply - three-phased - fan cooled											
NX860VAF	155	64	42.7	43.4	3750	28.9	136.0	9 200	9 756	96.1	1.500

[1] Data referred to motor mounted on aluminium flange: 400 x 400 x 12 mm (NX3-8) Temperature <40 °C near motor's flange . Stall torques refer to motor turning at 100 min -1

[2] Data measured at 20 °C. When „hot" consider -0.09 %/K derating

[3] Manufacturing tolerance data ±10 %

Tel: +45 63 12 83 00 | Email: ps@hymatik.com | www.hymatik.com | Hvidkaervej 27a, DK-5250 Odense SV, Denmark

Associated Drives

Motor	Associated Drive Sizes				
	PSD1S[2]	PSD1M	Compax3	AC890	AC30
230VAC power supply - single or three-phased					
NX310EAP	PSD1SW1200...	PSD1MW3222...	C3S025V2...	890SD-231300B...	-
NX310EAK	PSD1SW1300...	PSD1MW3433...	C3S025V2...	890SD-231550B...	-
NX420EAP	PSD1SW1300...	PSD1MW3433...	C3S063V2...	890SD-231700B...	-
NX420EAJ	PSD1SW1300...	PSD1MW3433...	C3S063V2...	890SD-231700B...	-
NX430EAL	PSD1SW1300...	PSD1MW3433...	C3S063V2...	890SD-231700B...	-
NX430EAF	-	PSD1MW2440...	C3S100V2...	890SD-232165B...	-
NX620EAV	PSD1SW1300...	PSD1MW3433...	C3S063V2...	890SD-231550B...	-
NX620EAR	-	PSD1MW2440...	C3S063V2...	890SD-231700B...	-
NX630EAR	-	PSD1MW2440...	C3S063V2...	890SD-232165B...	-
NX630EAN	-	PSD1MW2440...	C3S100V2...	890SD-232165B...	-
NX820EAR	-	PSD1MW2630...	C3S150V2...	890SD-232240C...	-
NX840EAK	-	-	-	890SD-232240C...	-
NX860EAJ	-	-	-	890SD-232240C...	-
230 VAC power supply - three-phased - fan cooled					
NX860VAF	-	-	-	-	-

Motor	Associated Drive Sizes				
	PSD1S[2]	PSD1M	Compax3	AC890	AC30
400 VAC power supply - single or three-phased					
NX310EAP	-	PSD1MW1300...	C3S015V4...	890SD-531200B...	31V-4D-0004
NX310EAK	-	PSD1MW1300...	C3S038V4...	890SD-531350B...	31V-4D-0004
NX420EAP	-	PSD1MW1300...	C3S038V4...	890SD-531450B...	31V-4D-0004
NX420EAJ	-	PSD1MW1300...	C3S075V4...	890SD-532100B...	31V-4D-0008
NX430EAL	-	PSD1MW1300...	C3S038V4...	890SD-532100B...	31V-4D-0005
NX430EAF	-	PSD1MW1400...	C3S075V4...	890SD-532120B...	31V-4D-0008
NX620EAV	-	PSD1MW1300...	C3S038V4...	890SD-531450B...	31V-4D-0004
NX620EAR	-	PSD1MW1400...	C3S075V4...	890SD-532100B...	31V-4D-0008
NX630EAR	-	PSD1MW1400...	C3S075V4...	890SD-532100B...	31V-4D-0008
NX630EAN	-	PSD1MW1600...	C3S150V4...	890SD-532120B...	31V-4D-0010
NX820EAR	-	PSD1MW1600...	C3S150V4...	890SD-532160B...	31V-4D-0012
NX840EAK	-	PSD1MW1800...	C3S300V4...	890SD-53216SB...	31V-4E-0023
NX860EAJ	-	PSD1MW1800...	C3S300V4...	890SD-532240C...	31V-4E-0023
400 VAC power supply - three-phased - fan cooled					
NX860VAJ	-	-	-	-	-

Tel: +45 63 12 83 00 | Email: ps@hymatik.com | www.hymatik.com | Hvidkaervej 27a, DK-5250 Odense SV, Denmark

Dimensions

Motor	A	Mounting Flange centering / interaxis hole	Shaft diameter x length	Without Brake		With Brake		Fr* [daN]	Fa* [daN]
	[mm]	[mm]	[mm]	L [mm]	Weight [kg]	L [mm]	Weight [kg]		
NX310	71	60 / 75-80	11 x 23	147	2	195	2.4	36	20
NX420	91.5	80 / 100	19 x 40	175	3.7	226	4.5	72	24
NX430	91.5	80 / 100	19 x 40	200	4.6	251	5.4	82	24
NX620	121	110 / 130	24 x 50	181	6.9	236	8	82	52
NX630	121	110 / 130	24 x 50	210	8.8	265	10	86	54

* Fr and Fa not cumulative: At 1500 min -1 for a bearing service life of 20 000 hours

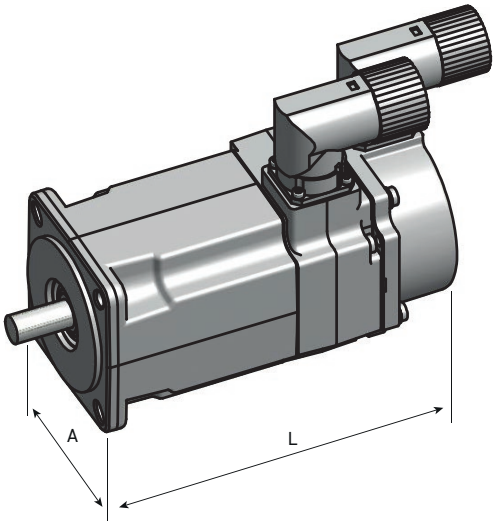

Motor	A	Mounting Flange centering / interaxis hole	Shaft diameter x length	Without Brake		With Brake		Fr* [daN]	Fa* [daN]
	[mm]	[mm]	[mm]	L [mm]	Weight [kg]	L [mm]	Weight [kg]		
NX820	155	130 / 165	32 x 58	200	13	266	16,5	151	28
NX840	155	130 / 165	32 x 58	260	20	326	23,5	165	33
NX860	155	130 / 165	32 x 58	320	27	386	30,5	172	37

* Fr and Fa not cumulative: At 1500 min -1 for a bearing service life of 20 000 hours

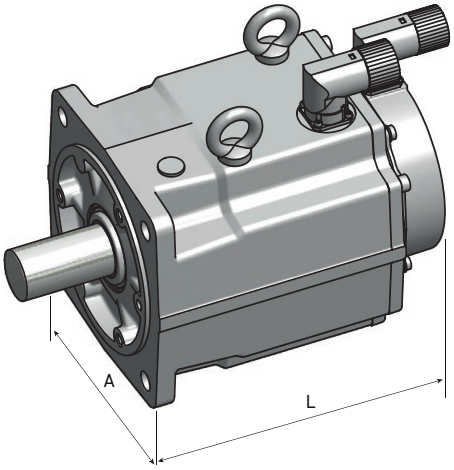

Tel: +45 63 12 83 00 | Email: ps@hymatik.com | www.hymatik.com | Hvidkaervej 27a, DK-5250 Odense SV, Denmark

Dimensions

Motor	A	Mounting Flange centering / interaxis hole	Shaft diameter x length	Without Brake		With Brake		Fr* [daN]	Fa* [daN]
	[mm]	[mm]	[mm]	L [mm]	Weight [kg]	L [mm]	Weight [kg]		
NX860V	185	130 / 165	32 x 58	424	30,5	490	34	172	37

* Fr and Fa not cumulative: At 1500 min -1 for a bearing service life of 20 000 hours

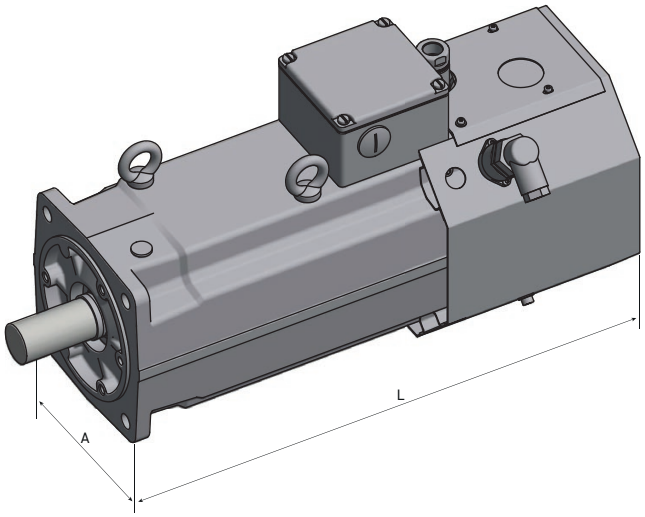

Tel: +45 63 12 83 00 | Email: ps@hymatik.com | www.hymatik.com | Hvidkaervej 27a, DK-5250 Odense SV, Denmark

Order Code - NX3, NX8, CE, UL - Natural Cooling Version

	1	2	3	4	5	6	7	8
Order example	**NX310E**	**A**	**P**	**R**	**7**	**0**	**0**	**0**

1	Motor type	
	NX310E NX420E NX430E ...	see table NX3-NX8 CE and UL Motors „Technical data“
2	Feedback sensor *	
	A	2 pole resolver (standard)
	Y	Without sensor
	P	Hiperface DSL ® SIL2 single turn 128 ppr EKS36
	Q	Hiperface DSL ® SIL2 multi turn 128 ppr EKM36
	R	Absolute single-turn HIPERFACE encoder 128 ppr SKS36
	S	Absolute multi-turn HIPERFACE encoder 128 ppr SKM36
	X	Commuted lines 10 poles – 2048pulses
3	Motor type	
	P K X ...	see table „Technical data“
4	Painting	
	R	Unpainted (standard)
	B	Black mat (on request)
5	Connections/Ventilation	
	1	Shielded cables/No
	7	Connectors (standard)/No
	9	CE power terminal box + feedback connector (NX860V only)

6	Brake/Thermal Protection	
	0	Without brake (standard) / No protection
	1	Without brake / PTC on power connection
	3	With brake / No protection
	4	With brake / PTC on power connection
	6	Without Brake / KTY sensor on Hiperface DSL encoder (Only one connector)
	7	With Brake / KTY sensor on Hiperface DSL encoder (Only one connector)
	A	Without brake / PTC on sensor connection (not available for UL version)
	C	Without brake / KTY on sensor connector (not available for UL version)
	D	With brake / PTC on sensor connection (not available for UL version)
	F	With brake / KTY on sensor connection (not available for UL version)
7	Protection degree	
	0	IP44 for NX860V
		IP64 NX3 - NX8 (standard)
	1	IP65 (option for NX3 - NX8)
8	Shaft end	
	0	Smooth shaft (standard)
	1	Keyed shaft

* Other types of feedback sensor are available on request

Tel: +45 63 12 83 00 | Email: ps@hymatik.com | www.hymatik.com | Hvidkaervej 27a, DK-5250 Odense SV, Denmark

Accessories and Options

Holding Brake

All NX motors are available with option holding brake.

Motor	Voltage	Power	Torque @ 20°C	Added length (resolver)	Added weight	Added inertia
	[V]	[W]	[Nm]	[mm]	[kg]	[kgmm2]
NX3	24	11	2	48	0.4	0.068
NX4		12	5.5	51	0.9	0.18
NX6		18	12	55	1.1 (NX620)- 1.2 (NX630)	0.54
NX8		26	36	66	3.5	5.56

Feedback

Motors may be eqquiped with various feedback types in order to meet the different requirements for precision, signal that the application needs. The standard motor includes the resolver feedback. Hiperface Encoder, DSL Encoder, Incremental Encoder are available like the following tables.

Resolver 2 poles

Code	A	
Motor Association	NX3	NX4, NX6 & NX8
Parker part number	220005P1001	220005P1002
Electrical specification	Values @ 8 kHz	
Polarity	2-polig	
Input voltage	7 Veff	
Input current	86 mA maximum	
Zero voltage	20 mA maximum	
Encoder accuracy	± 10’ max	
Ratio	0,5 ±5 %	
Output impedance (primary in short circuit whatever the position of the rotor)	Typical 120 + 200j Ω	
Dielectric rigidity (50 – 60 Hz)	500 V – 1 min	
Insulation resistance	⩾ 100 MΩ	
Rotor inertia	~30 g.cm²	
Operating temperature range	-55 bis +155 °C	

Incremental Encoder

Code	X
Motor Association	NX3, NX4, NX6 & NX8
Model	F10 (Hengstler)
Type	Incremental encoder with 10 pole commutation signals
Parker part number	220167P0003
Line count	2048 pulses per revolution
Electrical interface	Line driver 26LS31
System accuracy	Incremental signals ± 2.5‘ commutation signals ± 6‘
Perating speed	5 000 min-1
Power Supply	5VDC ±10 %
Current consumption (without load)	100 mA
Max pulse frequency	300 kHz
Operating temperature range	0 °C bis +120 °C

Tel: +45 63 12 83 00 | Email: ps@hymatik.com | www.hymatik.com | Hvidkaervej 27a, DK-5250 Odense SV, Denmark

Hiperface DSL ® encoder SIL2

Code	P	Q
Motor Association	NX3, NX4, NX6 & NX8	
Model	EKS36 SIL2(Sick)	EKM36 SIL2(Sick)
Type	Absolute single turn encoder	Absolute multi turn encoder
Parker part number	220174P0011	220174P0012
Electrical interface	Hiperface DSL	
Position values per revolution	4 096	-
Revolutions	-	4 096
Integral non-linearity	± 80''(Error limits for evaluating sine/cosine period)	
Differential non-linearity	± 40'' (Non-linearity within a sine/cosine period)	
Perating speed	12 000 min-1	9 000 min-1
Power Supply	7 VDC bis 12 VDC	
Current consumption	150 mA max.	
Output frequency	0 kHz – 75 kHz	
Operating temperature range	-20 °C bis + 115 °C	

HIPERFACE Encoder

Code	R	S
Motor Association	NX3, NX4, NX6 & NX8	
Model	SKS36 (Sick)	SKM36 (Sick)
Type	Absolute single turn encoder	Absolute multi turn encoder
Parker part number	220174P0003	220174P0004
Line count	128 sine/cosine periods per revolution	
Electrical interface	Hiperface	
Position values per revolution	4 096	
Revolutions	-	4 096
Error limits for the digital absolute value	± 320''(über RS485)	
Integral non-linearity	± 80''(Error limits for evaluating sine/cosine period)	
Differential non-linearity	± 40'' (Non-linearity within a sine/cosine period)	
Perating speed	12 000 min-1	9 000 min-1
Power Supply	7 VDC bis 12 VDC	
Current consumption (without load)	60 mA	
Output frequency	0 kHz – 65 kHz	
Operating temperature range	-20 °C bis + 110 °C	

Tel: +45 63 12 83 00 | Email: ps@hymatik.com | www.hymatik.com | Hvidkaervej 27a, DK-5250 Odense SV, Denmark

Accessories and Options

NX3 to NX8

Power connector

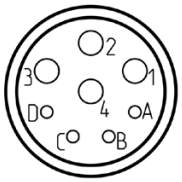

Pin	Description	
1	Phase U	
2	Ground	
3	Phase W	
4	Phase V	
A	Brake +	if the option is required
B	Brake -	
C	PTC or KTY Anode	
D	PTC or KTY Cathode	

Resolver connector feedback letter A



Pin	Description
1	S3 / Cos +
2	S1 / Cos -
3	PTC or KTY Anode
6	PTC or KTY Cathode
7	S2 / Sin -
8	S4 / Sin +
10	R1 / excitation +
12	R2 / excitation -

Power connector for feedback letter P/Q only

Pin	Description		
1	Phase U		
2	Ground		
3	Phase W		
4	Phase V		
A	-	Brake +	if the option is required
B	-	Brake -	
C	DSL +	PTC or KTY Anode	
D	DSL -	PTC or KTY Cathode	

Hiperface DSL® Connector feedback letter R/S/T/U



Pin	Description	
1	Sin +	
2	Ref Sin	
3	Cos +	
4	Ref Cos	
5	PTC or KTY Anode	if the option is required
6	PTC or KTY Cathode	
9	Data +	
10	Data -	
11	Us	
12	Ground	

Incremental encoder connector feedback letter X



Pin	Description
1	Vcc
2	PTC or KTY Anode
3	Ground
4	U
5	V \
6	V
7	PTC or KTY Cathode
8	W
9	W \
10	A
11	A \
12	B
13	B \
14	Z
15	Z \
17	U \

Tel: +45 63 12 83 00 | Email: ps@hymatik.com | www.hymatik.com | Hvidkaervej 27a, DK-5250 Odense SV, Denmark

Parker Hannifin Corporation
Motion Systems Group Europe
Parker Hannifin EMEA Sàrl European Headquarters
La Tuilière 6 Etoy
Switzerland CH-1163
www.parker.com/msge

192-063002-UK NX Servo-Motors_10.24 October 2024

Your Local Authorized Parker Distributor

© 2024 Parker Hannifin Corporation

Tel: +45 63 12 83 00 | Email: ps@hymatik.com | www.hymatik.com | Hvidkaervej 27a, DK-5250 Odense SV, Denmark