hymatik

April 2018 / **Bulletin 100-20**

Electric Expansion Valves

SER, SERI, SEHI

SPORLAN



Parker

ENGINEERING YOUR SUCCESS.

Tel: +45 63 12 83 00 | Email: ps@hymatik.com | www.hymatik.com | Hvidkaervej 27a, DK-5250 Odense SV, Denmark

FEATURES AND BENEFITS

- Step motor operated for precise control
- High resolution drive assembly
- Solenoid tight seating
- Corrosion resistant materials used throughout
- Field proven reliability
- Low power consumption (less than 4 watts)
- Unique built-in sightglass - indicates valve operation, moisture levels and refrigerant quality (SERI & SEHI only)
- Compatible with HCFC and HFC refrigerants and oils, in addition to subcritical CO_2
- Self lubricating materials used for long life
- High linear force output

The SER, SERI and SEHI are Electronically Operated Step Motor flow control valves, intended for the precise control of liquid refrigerant flow. Synchronized signals to the motor provide discrete angular movement, which translate into precise linear positioning of the valve piston. Valve pistons and ports are uniquely characterized, providing extraordinary flow resolution and performance. The SER, SERI and SEHI valves are easily interfaced with microprocessor based controllers, including Sporlan supplied controllers.

THE VALVES

Sporlan Electric Expansion Valves (EEVs), now rated at full stroke (100% open) with no reserve capacity, are currently available in nominal R-22 capacities from 2.5 to 434 tons (8.2 to 1424 kW), and can control refrigerant flow down to 10% of rated capacity. Therefore, they are applicable on all the same types of systems found in the air conditioning and refrigeration industries as thermostatic expansion valves. Sporlan electric valves are designed for compatibility with all current halocarbon refrigerants (HCFCs and HFCs including R-410A), in addition to subcritical CO_2. System conditions will dictate which product is necessary to control the application. Specific details can be reviewed with your Sporlan Sales Engineer.

⚠WARNING – USER RESPONSIBILITY

Failure or improper selection or improper use of the products described herein or related items can cause death, personal injury and property damage.

This document and other information from Parker Hannifin Corporation, its subsidiaries and authorized distributors provide product or system options for further investigation by users having technical expertise.

The user, through its own analysis and testing, is solely responsible for making the final selection of the system and components and assuring that all performance, endurance, maintenance, safety and warning requirements of the application are met. The user must analyze all aspects of the application, follow applicable industry standards, and follow the information concerning the product in the current product catalog and in any other materials provided from Parker or its subsidiaries or authorized distributors.

To the extent that Parker or its subsidiaries or authorized distributors provide component or system options based upon data or specifications provided by the user, the user is responsible for determining that such data and specifications are suitable and sufficient for all applications and reasonably foreseeable uses of the components or systems.

FOR USE ON REFRIGERATION and/or AIR CONDITIONING SYSTEMS ONLY

For more information about our products visit us at www.sporlan.com.
Bulletin 100-20, April 2018 supersedes Bulletin 100-20, January 2012, and all prior publications.

ELECTRIC VALVE BASICS

In current designs, the electronics controlling the valve are separate from the valve itself. The correct term to describe the valves is therefore *electronically controlled electric valves*. For convenience, the balance of this discussion will use the term *electric valve*. Since electric valves are assigned their function in the system by the software in the controller, an electric valve can be used anywhere in the system; as an expansion valve, discharge gas bypass valve, evaporator control valve, heat reclaim valve, head pressure control valve or crankcase pressure control valve. Certain design characteristics may indicate or restrict application to certain system conditions, but the fundamental operation of a Sporlan electric valve is consistent. The balance of this bulletin will focus on application as an Electric Expansion Valve (EEV).

TYPES OF ELECTRONICALLY CONTROLLED VALVES

Four basic types of electric valves have historically been offered to the marketplace; solenoid or pulse, analog, heat motor and step motor. Step motor valves, as shown in Figure 1, are the most sophisticated design. In this type of valve a small motor is used to open or close the valve port. The motor that is used does not rotate continuously, but instead, rotates a fraction of a revolution for each signal sent by the controller. These discrete "steps" give the motor its name. The number of step signals sent by the controller is "remembered", and the controller can return the valve to any previous position at any time. This repeatability is almost absolute and extremely fine control can be obtained. The digital circuitry used by step motor controllers can respond quickly and accurately. Sporlan step motors can be run at 200 steps/second using a voltage driver (L/R). Other step rates should be fully qualified to ensure valve performance and no loss of steps. Sporlan Electric Expansion Valves are designed for 2500 or 6386 steps, so extraordinary resolution and control of flow is possible.

Figure 1

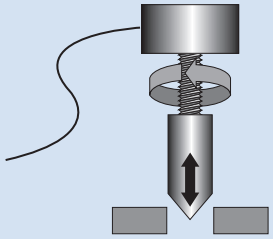

STEP MOTORS

Step motors have existed for many years, but were traditionally limited to very specialized, and often expensive, applications. When the personal computer industry expanded and automobiles became more electronically controlled, the need for small, reliable and inexpensive step motors increased dramatically. Step motors permitted the repeatable precision movement needed for high speed printers and computerized engine management. In the 1980s Sporlan began research into step motor technology, and production step motor valves were offered in the early 1990s.

STEP MOTOR THEORY

Unlike traditional motors that will rotate as long as the proper power is supplied, step motors rotate a known amount of arc and then stop. When power is removed and then reapplied the step motor will rotate another fixed amount (or step) and again stop. This cycle may be repeated indefinitely, within mechanical limits, in either direction. While seemingly complex, this start/stop motion is mechanically simpler than induction or commutated motors. Step motors, like almost all motors, are based on the magnetic principal that opposite poles attract and like poles repel. These poles are called North (N) and South (S).

Figure 2



If the center magnet above is free to rotate, then the orientation shown will always occur. If electromagnets are used, then a pivoted magnet or rotor can be made to align with the magnetic fields created when the electromagnets are energized.

Figure 3

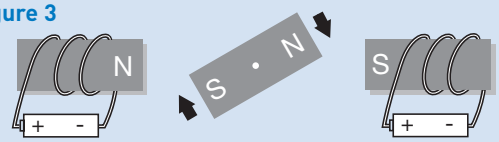

If power is left on, the magnetic poles will align and no further motion will take place.

Figure 4



If multiple groups of electromagnets are placed around a freely rotating permanent magnet rotor, and each is energized in series, then the rotor will step to each alignment position and a step motor is created.

Figure 5

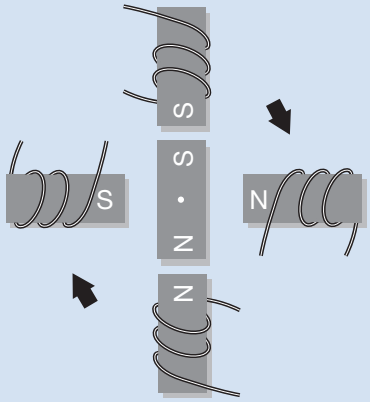

The above is a simple example. In reality, step motors may have 24 to 100 virtual electromagnets arranged around the rotor. Simple arithmetic shows these motors to have 15° to 3.6° step angles, or increments of rotation.

There are two general types of step motors: unipolar and bipolar. In a unipolar style, current flows in only one direction. In a typical example, one lead is always at +12 volts DC, and each of the other four leads is, in turn, connected to a ground. Drive circuitry is simpler, but torque and efficiency are lower than bipolar designs. However, unipolar motors have found acceptance in small capacity systems, within certain application limits. A bipolar motor, such as used in Sporlan electric valves, is powered by signals that change polarity. For the first step the black lead may be negative while the white is positive, but for the second step the black becomes positive while the white becomes negative. This push/pull increases torque and efficiency for motor size and power input, by utilizing the entire motor winding at all times. Bipolar is the predominant style of choice in the industry for larger step motor valves.

DIGITAL LINEAR ACTUATORS - DLAs

Small increments of rotation may be useful in print head drives or for signaling purposes, but often a linear movement is more desirable. In the case of electric refrigerant control valves, not only is linear motion needed, but significant linear force is also needed to close a port against high pressure. The solution to both these needs is a Digital Linear Actuator, or DLA (Figure 6). DLAs are used to convert rotation to a push/pull, often with a large increase in output force. The force increase is derived from a simple gear train, and may account for a fivefold increase in mechanical advantage. This torque increase is used to turn a drive screw or threaded shaft. A drive nut, or coupling, is threaded onto the shaft but prevented from turning by keyways, or specially shaped guides. Since the drive nut cannot turn, it must move forward or backward, depending on the rotation of the threaded shaft.

Figure 6

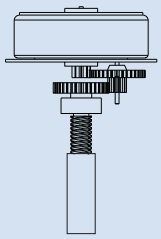

RESOLUTION

Resolution is defined as the ability of the valve to meet flow requirements accurately. In a pulse type valve only two stages of resolution are possible, fully open or fully closed. Theoretically, if a valve needs to meet a 50% load then it may remain closed for half the time and be fully open for half the time. The control of temperature and superheat will fluctuate as the valve alternately saturate and starves the evaporator. If the swings are 6°, we say the resolution is ±3°. An Analog Electric Valve or TEV has better resolution because it opens and closes smoothly. In both valves, however, there is hysteresis.

Hysteresis is the internal friction of any system. In a TEV it takes more force or pressure to deform the diaphragm in the opening direction than in the closing direction. This hysteresis has an effect on the resolution of the TEV, and limits its ability to precisely meter refrigerant over widely changing head pressure and evaporator load conditions. Balanced ported TEVs, like Sporlan BF and O series valves, have a much greater ability to follow load than conventional TEVs, but still not to the extent that EEVs can.

The resolution of an Electric Expansion Valve (EEV) is governed by the stroke and number of steps in that stroke. Sporlan offers nine standard Electric Expansion Valves to cover the full nominal capacity range from 2.5 to 434 tons (8.2 to 1424 kW) using R-22. All valves currently offer 2500 steps of stroke, except for the two largest valves, which have 6386 steps. The piston or pin moves the same linear distance for each step. For Sporlan EEVs, this distance ranges from 0.00008" to 0.00012" (0.002mm to 0.003mm). This extremely small change in the distance the pin moves away from the seat is reflected in a minute amount of refrigerant flow increase or decrease. Pulse type valves, with only open and shut capabilities, have inferior resolution. A simple analogy is comparing an on/off light switch which has only two steps of resolution and a dimmer switch which may have thousands. You may be exposed to the same amount of light by setting the dimmer to 50%, or by flickering the light on and off rapidly, but the impact to the room is very different.

CONTROL HARDWARE

Actual control hardware for the valves may take a variety of forms. The most complex and expensive utilizes discrete or individual transistors for each switching function. This design requires the use of eight transistors, labeled Q1 through Q8, connected as shown in the schematic Figure 7.

Figure 7

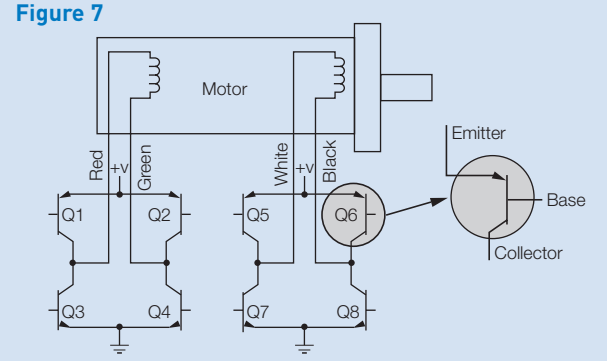

Transistors are simply solid state switches. Solid state means they are fabricated from a solid chip of silicon and have no moving parts. They act as switches or relays by using a small electrical signal to turn a large signal off and on. In the symbol above, the small signal enters the "base" lead and allows flow from emitter to collector. The microprocessor, or small computer, used in the controller has the ability to sequence signals to the "base" of each transistor. This sequence of signals turn the transistors on and off in pairs, to step the valve open or shut. Transistors are available as bipolar (not to be confused with motors of the same name) which control current, and MOSFET (Metal Oxide Semiconductor Field Effect Transistor) which control voltage. In each type there are also transistors that are used to turn off the supply voltage or the ground. Full exploration of these differences is beyond the scope of this bulletin, but drive circuitry using each of these types have been used successfully.

The drive sequence for Sporlan valves is shown in Table 1 below.

Table 1

OPEN ↓

BIPOLAR DRIVE SEQUENCE				
STEP	**BLACK**	**WHITE**	**RED**	**GREEN**
1	12 volts	0 volts	12 volts	0 volts
2	0 volts	12 volts	12 volts	0 volts
3	0 volts	12 volts	0 volts	12 volts
4	12 volts	0 volts	0 volts	12 volts
1	12 volts	0 volts	12 volts	0 volts

↑ CLOSE

As each phase is energized in sequence, the shaft of the motor will move one step in the direction indicated. The sequence repeats as many times as is needed to achieve the position calculated by the external electronic controller. Reversing the sequence changes the direction of the motor shaft. Proper sequencing allows the valve to open and close without loss of steps. While properly configured drives may be able to reverse direction without pausing, it is recommended to pause 25 ms prior to reversing direction to prevent loss of steps.

Sporlan Digital Linear Actuators will maintain position when power is removed. This "brake" effect allows controllers to be simpler and use less energy. Sporlan suggests that all voltage be removed from the motor when not actively stepping to minimize heat and power consumption. Over 130 pounds of force (578 newtons) are needed to cause the motor to turn when not powered. This is not possible in any proper application of the valve.

SOFTWARE

The valves, with their motors and wiring, and the controllers, with their transistors and microprocessors, are grouped together as "Hardware". To make the hardware perform a function, a set of instructions must be given to the microprocessor. This set of instructions is called "Software" and certain "routines" must be incorporated to make valve control possible.

Most step motor valves are designed without internal intelligence or feedback, that is, they move only in response to controller signals. The valves maintain their position when no signals are received and valve position is stored in controller memory. When the valve is given a signal to change position the controller keeps track of the change, however, the controller does not directly "know" whether the valve has changed position. To make this form of control effective, two control routines must be implemented: initialization and feedback loops.

INITIALIZATION & REINITIALIZATION

Initialization occurs when the valves are powered up for the first time, and after a loss of power. When the controller and valve combination are first powered together, the control does not know the valve position. To initialize, the controller sends out a stream of closing steps greater than the total number of steps in the valve stroke. This will assure that the valve is closed. This closed position becomes the "0" (zero) position of the valve used in all subsequent controller calculations.

This series of extra steps is called "overdriving", and the valves have been designed to accept this. The actual number of overdriving steps required is dependent upon the valve used. The actual number of mechanical travel steps of the valves is larger than the number of flow control steps, to account for design requirements and manufacturing tolerance. To ensure that the valves are completely closed during initialization, valves that have 2500 steps of flow control require 3500 steps of initialization. For the largest valves that have 6386 steps of control, 6500 steps of initialization are specified (reference Table 2).

Table 2

INITIALIZATION	
VALVE TYPE	**STEPS**
SER-B, -C, -D	3500
SERI-G, -J, -K, -L	3500
SEHI-175, -400	6500

Once the valve is fully closed and the controller knows the "**0**" valve position, the algorithm may be implemented with the aid of a feedback loop.

When properly controlled, Sporlan valves should not lose steps, and therefore it is not recommended that a full initialization take place every time the valve is closed. It is reasonable to *reinitialize* the valve no more than once per day. This should not exceed 10% of the valve's steps. If this is exceeded, excessive overdriving can reduce the life of the valve.

FEEDBACK LOOPS

Feedback occurs when the result of a process is sensed and the sensory information is used to modify the process. In simpler terms, when the controller opens the EEV too much, causing overcooling, the temperature sensor "feeds back" that information, and the controller closes the valve (Figure 8). Step motor valves could be designed with internal feedback that would report the actual position of the valve in number of steps open; however, this would be expensive and undesirable in terms of temperature control.

Figure 8

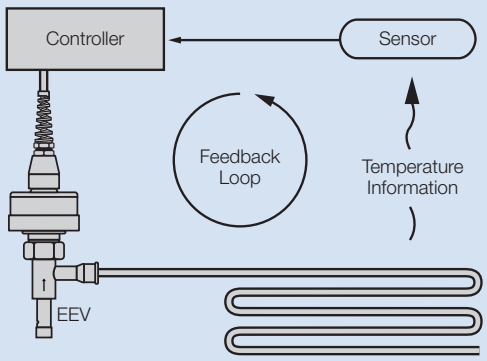

If a control algorithm were written with only references to absolute number of steps open, then changes in head pressure, liquid temperature, etc. would not be taken into account and control would be poor. Instead, sensors are used to ascertain the effect of valve position on temperature and the position is changed to bring the sensed temperature closer to the set point.

VALVE OPERATION

The SER, SERI and SEHI valves modulate by the electronically controlled rotation of a step motor. The step motor drives a gear train and lead screw to position a piston (refer to Figure 9). The piston is used to modulate flow through a port.

Figure 9
Typical SEH Motor

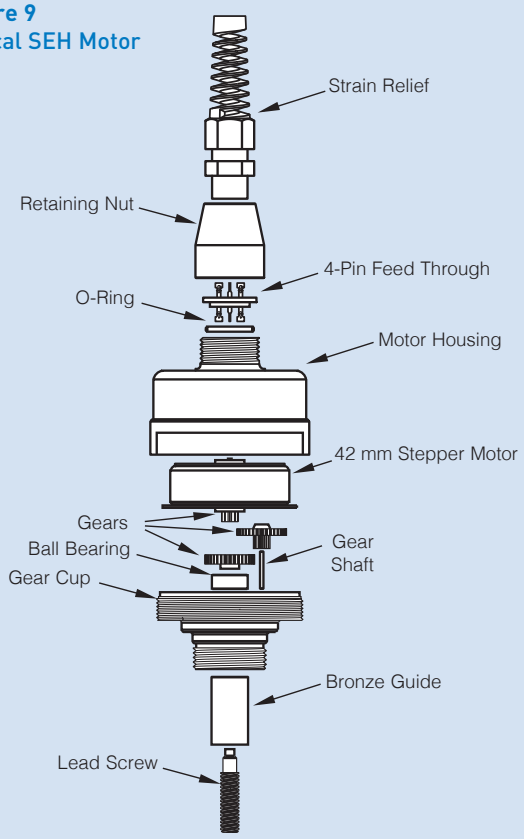

NOTE: Exploded view for illustration only, motor housing is hermetic and cannot be disassembled.

The motor is a two phase type driven in the bipolar mode. Two discrete sets of motor stator windings are powered in sequence to rotate the rotor. Polarity of the drive signal reverses for each step.

The sequencing is accomplished electronically through the bipolar drive circuit shown in Figure 7. The drive transistors, Q1 through Q8, are electronically biased in pairs by the controller as shown in Table 1.

The SER valves have a stroke of 0.23" (5.8mm) and 2500 steps of resolution. Each step yields 0.00009" (0.0023mm) of travel. SERI valves also have 2500 steps, but with 0.297" (7.5mm) of travel, yielding 0.00012" (0.003mm) of travel per step. The SEHI valves have an operating stroke of 0.500" (12.7mm) and 6386 steps of control, therefore each step translates into 0.00008" (0.002mm) of travel. When used with a Sporlan controller, the valves provide unsurpassed accuracy in resolution of flow and repeatability of position.

External parts of the valve are brass, copper and stainless steel, and meet or exceed 2000 hour salt spray tests per ASTM B-117. The SER valves have an innovative uni-body construction that further improves resistance to extreme environmental conditions, as well as an IP-67 rated removable cable that can be installed in any of four possible orientations for ultimate flexibility. The SERI family also comes standard with removable cable, and a detachable motor housing for serviceability. The SEHI valves are also equipped with a removable motor housing, that has a hermetic cable connection to the motor. The leads on all valves can be supplied in a variety of lengths to suit specific customer requirements.

Total power consumption is less than 4 watts when operating at a rate of 200 steps/second with standard L/R type drive circuitry (refer to the Table of Specifications). Faster step rates (up to 400 steps/second) may be obtained with properly configured current limited “chopper” type drives. Additional qualification testing is needed to validate valve operation. Please contact Sporlan for more information.

The SER-B and SER-C are now rated at a safe working pressure of 1015 psig (70 bar). The remainder of the SER and SERI valves are rated 700 psig (48 bar) MRP, while the SEHI-175 and SEHI-400 are rated 620 psig (43 bar) and 500 psig (34 bar), respectively. Operating ambient temperature range is -50°F to 155°F (-45°C to 68°C) but temperatures of up to 250°F (121°C) may be used for dehydration.

APPLICATION

Sporlan is not responsible for system design, for any damage arising from faulty system design, or for misapplication of its products. If these valves are applied in any manner other than as described in this bulletin, the Sporlan warranty is void. Please contact your Sporlan Sales Engineer for assistance with your specific application.

It is the responsibility of the controller manufacturer to provide suitable drive circuitry and power supply. Sporlan will assist where necessary, but accepts no liability for improper control of the valve. Careful consideration should be given to the interaction between the valve controller and system controller (if independent), to ensure proper behavior in all system conditions. Control strategy is a critical factor in determining valve duty cycle and superheat control capability. It is strongly suggested that power be disabled to the valve when not actively stepping. While properly configured drives may be able to reverse direction without pausing, it is recommended to pause 25 ms prior to reversing direction to prevent loss of steps. Conventional initialization routines, which include overdriving the motor to ascertain the zero step position are acceptable. Contact Sporlan for more information.

SELECTION PROCEDURE

Sporlan Electric Expansion Valves (EEVs) are one part of a system used for refrigerant flow control in air conditioning or refrigeration applications. The other parts of the system are sensors and an electronic controller. The EEV controls the flow of refrigerant entering the direct expansion (DX) evaporator in response to signals sent by the controller. These signals are calculated by the controller from sensor inputs. A set of sensors, either two temperature sensors or a pressure transducer and a temperature sensor, are used to measure superheat. Typical control is based on superheat set point but an additional temperature sensor may be used to measure discharge water or air temperature. This air or water temperature may be controlled directly, as long as superheat remains at a level sufficient to prevent floodback. The ability of the EEV to control the amount of refrigerant in the evaporator to reach discharge set point while preventing floodback makes the EEV the ideal expansion device for most air conditioning, chiller, environmental chamber and refrigeration applications. Some EEV controllers can be programmed to follow unique control algorithms making the EEV especially useful for many diverse applications.

The actual selection of EEV valves should be based on information generally required for any expansion valve. The following procedure should be used when selecting a Sporlan EEV.

1. **Determine refrigerant to be used.** Sporlan electric valves are designed for compatibility with all current halocarbon refrigerants (HCFCs and HFCs including R-410A), in addition to subcritical CO_2.
2. **Determine capacity required for the valve.** This is normally the evaporator capacity at the desired conditions.
3. **Determine pressure drop across valve.** Subtract the evaporating pressure from the condensing pressure. The condensing pressure used in this calculation should be the minimum operating condensing pressure of the system. From this value, subtract all other pressure losses to obtain the net pressure drop across the valve. Be sure to consider all of the following possible sources of pressure drop: (1) friction losses through refrigeration lines including the evaporator and condenser; (2) pressure drop across liquid line accessories such as a solenoid valve and filter-drier; (3) static pressure loss (gain) due to the vertical lift (drop) of the liquid line; and (4) pressure drop across a refrigerant distributor, if used. Refer to Bulletin 20-10 for further information on refrigerant distributors.

4. **Determine the liquid temperature of the refrigerant entering the valve.** The EEV capacity tables in this bulletin are typically based on a liquid temperature of 100°F (38°C). For other liquid temperatures, apply the correction factor shown below the tables for each refrigerant.

5. **Select valve from the capacity tables.** Select a valve based on the design evaporating temperature and the available pressure drop across the valve. Sporlan EEVs are now rated at full stroke (100% open), with no reserve capacity. Due to superior resolution and flow control capability across the entire operating range, Sporlan EEVs can be applied down to 10% of nominal capacity. Be sure to apply the appropriate liquid temperature correction factor to the valve ratings shown in the tables. Once the desired valve capacity has been located, determine the valve model from the first column of the appropriate table. On multiple evaporator systems, select each valve on the basis of individual evaporator capacity.

SELECTION EXAMPLES:

Refrigerant: R-410A
Condensing Temperature: 100°F
Liquid Temperature: 90°F
Evaporator Temperature: 40°F
Liquid Line Loss: 7 psi
ΔP Distributor and Tubes: 35 psi*
Evaporator Load: 5 tons

Condensing Pressure (psig):	320
Liquid Line Loss (Estimate):	- 7
Distributor and Tubes:	-35
Evaporator Pressure (psi):	-118
ΔP across EEV:	160

R-410A, 90°F Liquid Correction Factor: 1.08
SER-B: 2.97 tons x 1.08 = 3.21 tons
SER-C: 8.05 tons x 1.08 = 8.69 tons

Select an SER-C from the capacity table.

Refrigerant: R-134a
Condensing Temperature: 32°C
Liquid Temperature: 27°C
Evaporator Temperature: -10°C
Liquid Line Loss: 0.5 bar
ΔP Distributor and Tubes: 1.7 bar*
Evaporator Load: 900 kW

Condensing Pressure (bar):	7.2
Liquid Line Loss (Estimate):	- 0.5
Distributor and Tubes:	- 1.7
Evaporator Pressure:	- 1.0
ΔP across EEV:	4.0

R-134a, 27°C Liquid Correction Factor: 1.16
SEHI-175: 482 kW x 1.16 = 559 kW
SEHI-400: 1006 kW x 1.16 = 1167 kW

Select an SEHI-400 from the capacity table.

*See Sporlan Bulletin 20-10 for pressure drop data as related to percent loading.

ORDERING INSTRUCTIONS / NOMENCLATURE*

Sporlan valves are available in angle and/or straight through offset configurations (reference the Available Connections table for additional details). The SERI and SEHI valves feature a built-in sightglass (not available on the small SER family of valves). The sightglass indicates the moisture level of the refrigerant, flash gas present upstream of the valve, and provides a visual confirmation of valve piston movement. This unique feature is useful for system refrigerant charging, service and diagnostics.

SER-B, -C, -D

SER	–	C	3/8"	x	1/2"	ODF	–	10'	–	S
Valve Family		Valve Model	Inlet Fitting Size		Outlet Fitting Size	Fitting Type		Cable Length		Stripped and Tinned Cable Ends (Custom Connectors Available)

SERI-G, -J, -K, -L

SERI	–	J	S	7/8"	x	1-1/8"	ODF	–	40'	–	S
Valve Family		Valve Model	Straight Through Offset Configuration (blank if angle)	Inlet Fitting Size		Outlet Fitting Size	Fitting Type		Cable Length		Stripped and Tinned Cable Ends (Custom Connectors Available)

SEHI-175

SEHI	–	175	1-5/8"	x	2-1/8"	ODF	–	30'	–	S	AN
Valve Family		Valve Model	Inlet Fitting Size		Outlet Fitting Size	Fitting Type		Cable Length		Stripped and Tinned Cable Ends (Custom Connectors Available)	Angle Configuration (blank if straight through offset)

SEHI-400

SEHI	–	400	2-1/8"	x	2-1/8	ODF	–	20'	–	S	AN
Valve Family		Valve Model	Inlet Fitting Size		Outlet Fitting Size	Fitting Type		Cable Length		Stripped and Tinned Cable Ends (Custom Connectors Available)	**AN**-Angle Configuration **ST**-Straight Through Configuration

* Refer to Available Connections table for specific configurations, fitting sizes and cable lengths.

SPECIFICATIONS					
VALVE	**SER-B,-C**	**SER-D**	**SERI-G, -J, -K, -L**	**SEHI-175**	**SEHI-400**
Motor type	2 phase, bipolar wet motor				
Compatible refrigerant	All common HCFC and HFC refrigerants including R-410A and subcritical R-744				All common HCFC and HFC refrigerants
Compatible oils	All common Mineral, Polyolester and Alkybenzene oils				
Supply voltage (L/R)	12 volt DC, -5%, +10% measured at the valve leads				
Cable type	IP67 Removable Quad-Position		IP67 Removable Quad-Position	Hermetic	Hermetic
Phase resistance	100 ohms +- 10%		100 ohms +-10%	75 ohms +-10%	75 ohms +-10%
Chopping current*	Evaluate to avoid step loss or damage to the valve*				
Maximum power input (L/R)	2.8 watts		2.8 watts	3.8 watts	3.8 watts
Recommended step rate	200/second (L/R), up to 400/second (current limited)				
Number of steps	2500		2500	6386	6386
Resolution	.00009" (.0023 mm) / step		.00012" (.003 mm) / step	.00008" (.002 mm) / step	.00008" (.002 mm) / step
Stroke	0.23" (5.8 mm)		.297" (7.5 mm)	.500" (12.7mm)	.500" (12.7mm)
MOPD	580 psid (40 bar)		500 psid (34 bar)	500 psid (34 bar)	300 psid (21 bar)
MRP	1015 psig (70 bar)	700 psig (48 bar)	700 psig (48 bar)	620 psig (43 bar)	500 psig (34 bar)
Max. internal leakage	100 cc/min @ 100 psid (6.9 bar), dry air				
Max. external leakage	.10 oz./yr at 300 psig (2.8 gram/yr @ 20 bar)				
Operating temp range	-50°F to 155°F (-45°C to 68°C)				
Materials of construction	Brass, copper, synthetic seals, stainless steel				

* Contact Sporlan Application Engineering for qualification testing details.

SER-B, -C

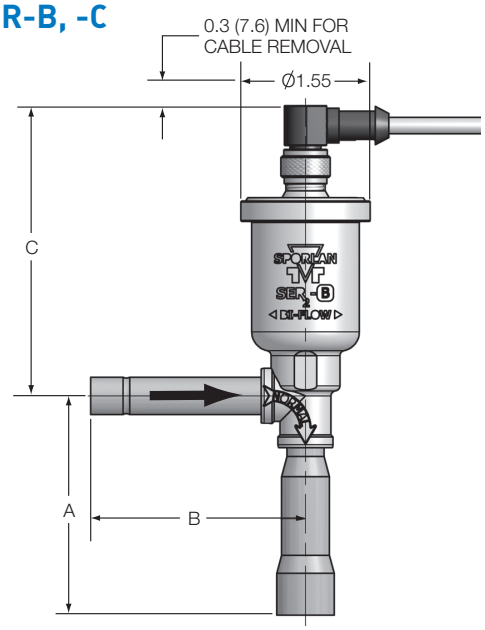

SER-DS

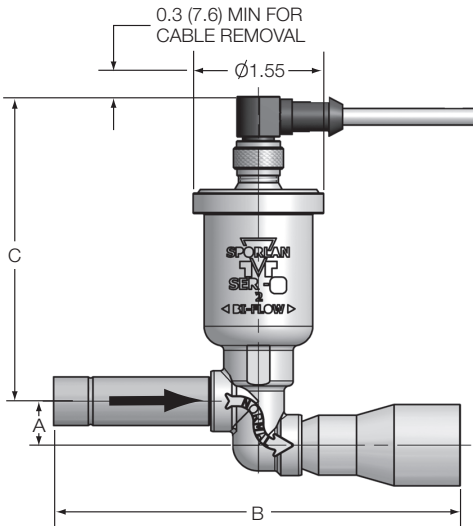

SERI-G, -J, -K, -L

(Angle)

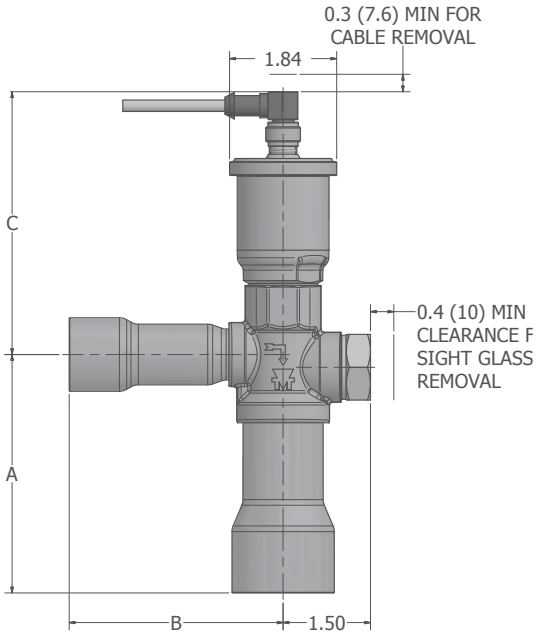

SERI-GS, -JS, -KS, -LS

(Straight Through Offset)

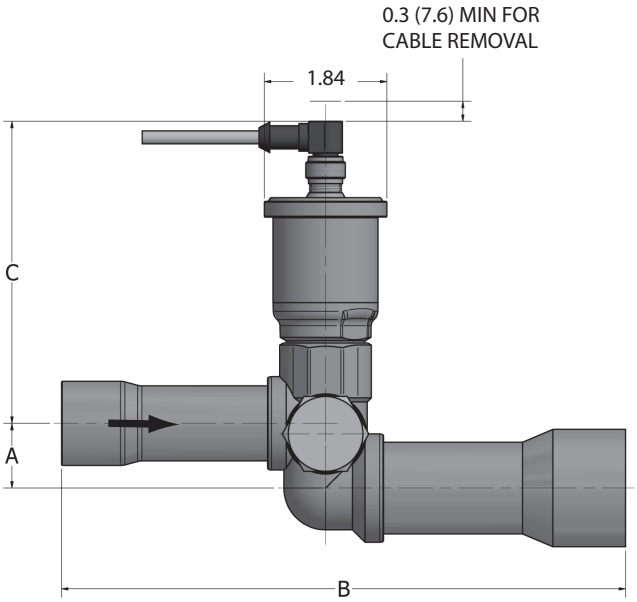

Reference Dimensions – Inches (mm)

SEHI-175

(Angle)

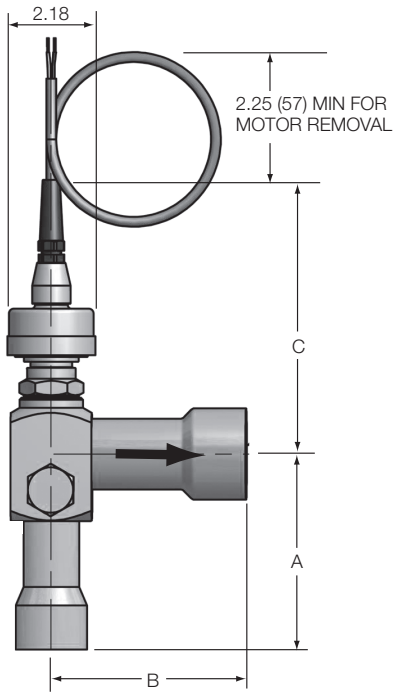

SEHI-175

(Straight Through Offset)

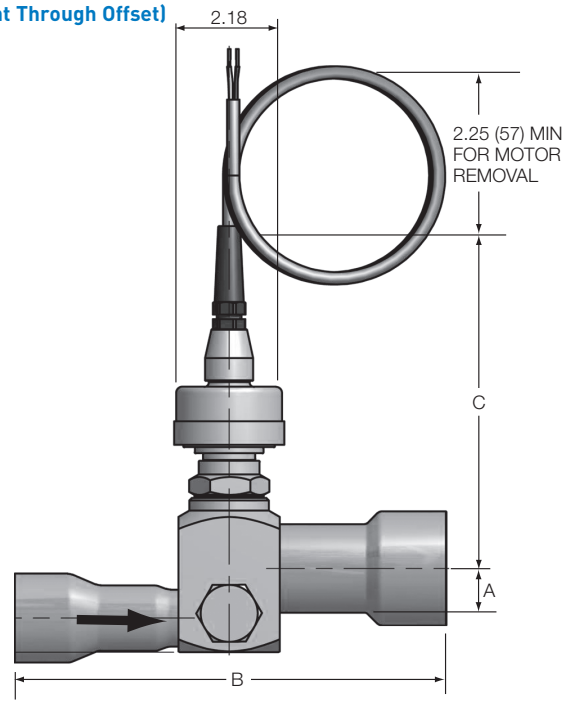

SEHI-400

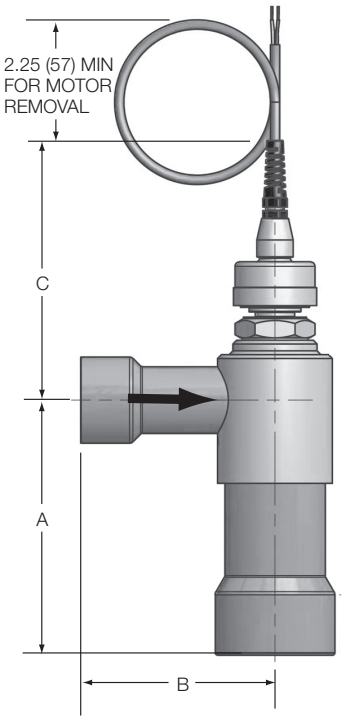

REFERENCE DIMENSIONS / Inches (mm) *				
VALVE	**CONFIGURATION**	**A**	**B**	**C**
SER-B	Angle	2.63 (66.8)	2.56 (65.0)	3.57 (90.7)
SER-C	Angle	2.63 (66.8)	2.56 (65.0)	3.57 (90.7)
SER-DS	Straight Through Offset	0.52 (13.2)	4.83 (122.7)	3.57 (90.7)
SERI-G	Angle	3.65 (92.7)	3.11 (79.0)	3.61 (91.7)
SERI-J		3.86 (98.0)	3.31 (84.1)	3.61 (91.7)
SERI-K		3.92 (99.6)	3.39 (86.1)	4.05 (102.9)
SERI-L		4.00 (101.6)	3.70 (94.0)	4.06 (103.1)
SERI-GS	Straight Through Offset	0.73 (18.5)	6.84 (173.7)	3.59 (91.2)
SERI-JS		0.73 (18.5)	7.09 (180.1)	3.59 (91.2)
SERI-KS		0.97 (24.6)	7.66 (194.6)	4.01 (101.9)
SERI-LS		0.97 (24.6)	7.69 (195.3)	4.01 (101.9)
SEHI-175	Angle	4.98 (126.5)	4.82 (122.4)	6.85 (174.0)
	Straight Through Offset	0.98 (24.9)	8.50 (215.9)	6.85 (174.0)
SEHI-400	Angle	6.28 (159.5)	5.08 (129.0)	6.71 (170.4)

* Dimensions may vary slightly based upon connection sizes selected

Reference Dimensions – Inches (mm)

AVAILABLE CONNECTIONS						
VALVE TYPE	INLET – Inches (ODF)	OUTLET – Inches (ODF)	CONFIGURATION	CABLE LENGTH		CABLE ENDS
				FEET	METERS	
SER-B*	1/4, 3/8	3/8, 1/2, 5/8	Angle	10 Less Cable	3 Less Cable	S- Stripped and Tinned (Custom Connections Available)
SER-C*	1/4, 3/8	3/8, 1/2, 5/8	Angle			
SER-DS*	3/8, 1/2, 5/8	1/2, 5/8, 7/8, 1-1/8	Straight Through Offset			
SERI-G*	5/8, 7/8	1/2, 5/8, 7/8, 1-1/8, 1-3/8	Angle or Straight Through Offset	10 Less Cable	3 Less Cable	
SERI-J*	7/8, 1-1/8	7/8, 1-1/8, 1-3/8				
SERI-K†	1-1/8	7/8, 1-1/8, 1-3/8, 1-5/8				
SERI-L†	1-1/8, 1-3/8	1-1/8, 1-3/8, 1-5/8				
SEHI-175	1-1/8, 1-3/8, 1-5/8	2-1/8		10, 20, 30, 40	3, 6, 9, 12	
SEHI-400	1-5/8, 2-1/8, 2-5/8	1-5/8, 2-1/8, 2-5/8, 3-1/8 ODM	Angle			

*Suitable for bi-directional applications.
†Bi-sealing, reduced flow in reverse direction.

CAPACITY

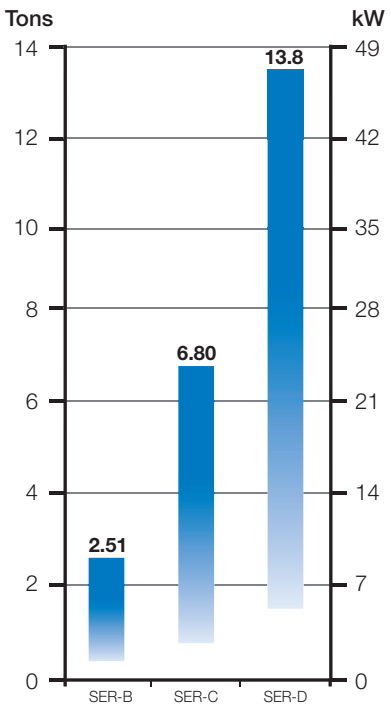

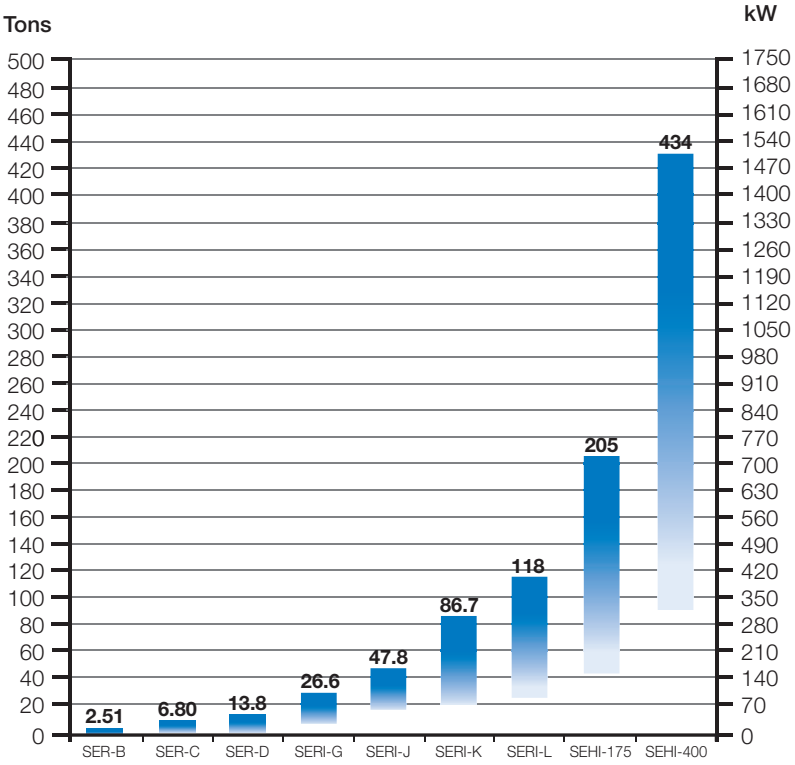

R-22 at 100°F (38°C) liquid, 100 psi (6 bar) pressure drop, 40°F (5°C) evaporator temperature, and full stroke.

Reference Dimensions – Inches (mm)

R-22 Capacities in Tons (at Evaporator Temperature °F)

	VALVE TYPE	40°F								20°F								0°F							
		Pressure Drop Across Valve (psid)																							
		75	100	125	150	175	200	225	250	75	100	125	150	175	200	225	250	75	100	125	150	175	200	225	250
R-22	SER-B	2.17	2.51	2.80	3.07	3.32	3.55	3.76	3.96	2.12	2.44	2.73	2.99	3.23	3.46	3.67	3.87	2.06	2.38	2.66	2.91	3.14	3.36	3.56	3.76
	SER-C	5.89	6.80	7.60	8.33	8.99	9.61	10.20	10.75	5.74	6.63	7.41	8.12	8.77	9.38	9.94	10.48	5.58	6.44	7.20	7.89	8.52	9.11	9.66	10.18
	SER-D	12.0	13.8	15.5	16.9	18.3	19.6	20.7	21.9	11.7	13.5	15.1	16.5	17.8	19.1	20.2	21.3	11.3	13.1	14.6	16.0	17.3	18.5	19.7	20.7
	SERI-G	23.0	26.6	29.7	32.5	35.1	37.6	39.8	42.0	22.4	25.9	29.0	31.7	34.3	36.6	38.9	41.0	21.8	25.2	28.1	30.8	33.3	35.6	37.8	39.8
	SERI-J	41.4	47.8	53.5	58.6	63.2	67.6	71.7	75.6	40.4	46.6	52.1	57.1	61.7	65.9	69.9	73.7	39.2	45.3	50.6	55.5	59.9	64.1	67.9	71.6
	SERI-K	75.1	86.7	96.9	106	115	123	130	137	73.2	84.5	94.5	104	112	120	127	134	71.1	82.1	91.8	101	109	116	123	130
	SERI-L	102	118	132	144	156	167	177	186	99.5	115	128	141	152	162	172	182	96.6	112	125	137	148	158	167	176
	SEHI-175	178	205	229	251	271	290	308	324	173	200	224	245	265	283	300	316	168	194	217	238	257	275	291	307
	SEHI-400	376	434	485	532	574	614	651	686	367	423	473	519	560	599	635	669	356	411	460	504	544	582	617	650

R-22 Capacities in kW (at Evaporator Temperature °C)

	VALVE TYPE	5°C								-10°C								-20°C							
		Pressure Drop Across Valve (bar)																							
		4	6	8	10	12	14	16	18	4	6	8	10	12	14	16	18	4	6	8	10	12	14	16	18
R-22	SER-B	6.71	8.22	9.49	10.6	11.6	12.6	13.4	14.2	6.47	7.93	9.16	10.2	11.2	12.1	12.9	13.7	6.30	7.71	8.91	9.96	10.9	11.8	12.6	13.4
	SER-C	18.2	22.3	25.7	28.8	31.5	34.1	36.4	38.6	17.6	21.5	24.8	27.8	30.4	32.8	35.1	37.2	17.1	20.9	24.2	27.0	29.6	32.0	34.2	36.2
	SER-D	37.0	45.4	52.4	58.6	64.1	69.3	74.1	78.6	35.7	43.7	50.5	56.5	61.9	66.8	71.4	75.8	34.7	42.6	49.1	54.9	60.2	65.0	69.5	73.7
	SERI-G	71.1	87.1	101	112	123	133	142	151	68.6	84.0	97.0	108	119	128	137	146	66.7	81.7	94.4	106	116	125	133	142
	SERI-J	128	157	181	202	222	240	256	272	123	151	175	195	214	231	247	262	120	147	170	190	208	225	240	255
	SERI-K	232	284	328	367	402	434	464	492	224	274	317	354	388	419	448	475	218	267	308	344	377	407	436	462
	SERI-L	315	386	446	499	546	590	631	669	304	372	430	481	527	569	608	645	296	362	418	468	513	554	592	628
	SEHI-175	549	673	777	868	951	1028	1099	1165	530	649	749	837	917	991	1059	1124	515	631	729	815	893	964	1031	1093
	SEHI-400	1163	1424	1644	1838	2014	2175	2325	2466	1121	1373	1586	1773	1942	2097	2242	2378	1091	1336	1543	1725	1889	2041	2182	2314

R-134a Capacities in Tons (at Evaporator Temperature °F)

	VALVE TYPE	40°F								20°F								0°F							
		Pressure Drop Across Valve (psid)																							
		40	60	80	100	120	140	160	180	40	60	80	100	120	140	160	180	40	60	80	100	120	140	160	180
R-134a	SER-B	1.48	1.82	2.10	2.34	2.57	2.77	2.96	3.14	1.41	1.72	1.99	2.22	2.44	2.63	2.81	2.98	1.34	1.64	1.89	2.12	2.32	2.51	2.68	2.84
	SER-C	4.02	4.92	5.68	6.35	6.96	7.52	8.04	8.53	3.81	4.67	5.39	6.03	6.60	7.13	7.63	8.09	3.63	4.45	5.14	5.74	6.29	6.79	7.26	7.70
	SER-D	8.18	10.0	11.6	12.9	14.2	15.3	16.4	17.3	7.76	9.50	11.0	12.3	13.4	14.5	15.5	16.5	7.39	9.05	10.4	11.7	12.8	13.8	14.8	15.7
	SERI-G	15.6	19.2	22.1	24.8	27.2	29.3	31.3	33.2	15.1	18.4	21.2	23.6	25.9	28.0	29.9	31.6	14.2	17.4	20.1	22.5	24.7	26.6	28.5	30.2
	SERI-J	28.2	34.5	39.9	44.6	48.8	52.7	56.4	59.8	26.9	33.1	38.1	42.6	46.6	50.4	53.8	57.1	25.6	31.4	36.2	40.5	44.4	47.9	51.2	54.4
	SERI-K	51.1	62.6	72.2	80.8	88.5	95.6	102	108	48.8	59.8	69.1	77.2	84.5	91.3	97.6	104.0	46.4	56.9	65.6	73.4	80.4	86.9	92.9	98.5
	SERI-L	69.6	85.3	98.5	110	121	130	139	148	66.1	80.9	93.4	104	114	124	132	140	62.9	77.0	89.0	99.5	109	118	126	133
	SEHI-175	121	148	172	192	211	227	242	258	116	142	164	184	201	216	232	246	110	135	156	174	191	206	220	234
	SEHI-400	250	307	354	396	434	469	501	531	238	291	336	376	412	445	475	504	226	277	320	358	392	423	453	480

R-134a Capacities in kW (at Evaporator Temperature °C)

	VALVE TYPE	5°C								-10°C								-20°C							
		Pressure Drop Across Valve (bar)																							
		2.5	4	5.5	7	8.5	10	11.5	13	2.5	4	5.5	7	8.5	10	11.5	13	2.5	4	5.5	7	8.5	10	11.5	13
R-134a	SER-B	4.96	6.28	7.36	8.31	9.15	9.93	10.6	11.3	4.71	5.96	6.98	7.88	8.68	9.42	10.1	10.7	4.48	5.67	6.65	7.50	8.27	8.97	9.62	10.2
	SER-C	13.5	17.0	20.0	22.5	24.8	26.9	28.9	30.7	12.8	16.1	18.9	21.4	23.5	25.5	27.4	29.1	12.2	15.4	18.0	20.3	22.4	24.3	26.1	27.7
	SER-D	27.4	34.6	40.6	45.8	50.5	54.8	58.7	62.4	26.0	32.8	38.5	43.5	47.9	51.9	55.7	59.2	24.7	31.3	36.7	41.4	45.6	49.5	53.0	56.4
	SERI-G	52.4	66.4	77.8	87.6	96.7	105	112	120	49.2	62.4	73.1	82.4	90.8	98.5	106	112	47.1	59.5	69.8	78.7	86.7	94.1	101	107
	SERI-J	94.4	119	140	158	174	189	202	215	88.6	112	131	148	164	176	191	202	84.6	107	126	142	156	169	181	193
	SERI-K	171	216	254	286	315	342	367	391	161	204	238	269	296	321	344	366	153	194	228	256	284	307	329	349
	SERI-L	233	295	346	390	430	466	500	532	221	280	328	370	408	442	474	504	211	266	312	352	388	421	452	480
	SEHI-175	406	514	602	680	749	813	871	926	381	482	566	638	704	762	818	869	365	461	540	609	672	728	781	831
	SEHI-400	839	1061	1244	1404	1547	1678	1799	1913	796	1006	1180	1331	1467	1591	1707	1814	758	959	1124	1268	1397	1516	1625	1728

Liquid Temperature Correction Factors

°F	0	10	20	30	40	50	60	70	80	90	100	110	120	130	140
°C	-18	-12	-7	-1	4	10	16	21	27	32	38	43	49	54	60
R-22	1.56	1.51	1.45	1.40	1.34	1.29	1.23	1.17	1.12	1.06	1.00	0.94	0.88	0.82	0.76
R-134a	1.70	1.63	1.56	1.49	1.42	1.36	1.29	1.21	1.14	1.07	1.00	0.93	0.85	0.78	0.71

R-404A Capacities in Tons (at Evaporator Temperature °F)

	VALVE TYPE	40°F								20°F								0°F							
		Pressure Drop Across Valve (psid)																							
		75	100	125	150	175	200	225	250	75	100	125	150	175	200	225	250	75	100	125	150	175	200	225	250
R-404A	SER-B	1.41	1.62	1.81	1.99	2.15	2.29	2.43	2.57	1.33	1.54	1.72	1.89	2.04	2.18	2.31	2.44	1.26	1.45	1.63	1.78	1.92	2.06	2.18	2.30
	SER-C	3.81	4.40	4.92	5.39	5.82	6.22	6.60	6.96	3.62	4.18	4.67	5.12	5.53	5.91	6.27	6.61	3.41	3.94	4.41	4.83	5.22	5.58	5.91	6.23
	SER-D	7.75	8.95	10.0	11.0	11.8	12.7	13.4	14.2	7.36	8.50	9.51	10.4	11.2	12.0	12.8	13.4	6.95	8.02	8.97	9.82	10.6	11.3	12.0	12.7
	SERI-G	15.2	17.6	19.6	21.5	23.2	24.8	26.4	27.8	14.4	16.7	18.6	20.4	22.0	23.5	25.1	26.4	13.6	15.6	17.5	19.2	20.7	22.2	23.5	24.8
	SERI-J	27.4	31.6	35.3	38.7	41.8	44.7	47.4	50.0	25.9	30.0	33.5	36.7	39.6	42.4	44.9	47.4	24.4	28.2	31.5	34.5	37.3	39.9	42.4	44.6
	SERI-K	49.6	57.3	64.1	70.2	75.8	81.1	86.0	90.6	47.1	54.4	60.7	66.5	71.9	76.8	81.5	85.9	44.4	51.1	57.1	62.6	67.6	72.4	76.6	80.8
	SERI-L	66.0	76.2	85.2	93.4	101	108	114	121	62.7	72.4	81.0	88.7	95.8	102	109	114	59.2	68.3	76.4	83.7	90.4	96.6	102	108
	SEHI-175	118	136	152	167	180	193	205	215	112	129	145	158	171	182	193	204	105	121	135	148	160	172	182	192
	SEHI-400	237	274	307	336	363	388	411	434	226	260	291	319	345	368	391	412	213	246	275	301	325	348	369	389

	VALVE TYPE	-20°F								-40°F							
		Pressure Drop Across Valve (psid)															
		75	100	125	150	175	200	225	250	75	100	125	150	175	200	225	250
R-404A	SER-B	1.18	1.36	1.52	1.67	1.80	1.93	2.04	2.15	1.10	1.27	1.42	1.55	1.68	1.79	1.90	2.00
	SER-C	3.20	3.69	4.13	4.52	4.89	5.22	5.54	5.84	2.97	3.43	3.84	4.21	4.54	4.86	5.15	5.43
	SER-D	6.51	7.51	8.40	9.20	9.94	10.6	11.3	11.9	6.05	6.99	7.81	8.56	9.24	9.88	10.5	11.0
	SERI-G	12.7	14.6	16.4	17.9	19.4	20.7	21.9	23.1	11.6	13.6	15.2	16.6	17.9	19.2	20.4	21.4
	SERI-J	22.8	26.4	29.4	32.2	34.8	37.2	39.5	41.6	21.1	24.4	27.3	29.9	32.4	34.5	36.6	38.6
	SERI-K	41.3	47.6	53.4	58.4	63.1	67.5	71.6	75.5	38.4	44.2	49.5	54.2	58.5	62.6	66.4	69.9
	SERI-L	55.4	64.0	71.5	78.4	84.6	90.5	96.0	101	51.5	59.5	66.5	72.9	78.7	84.1	89.3	94.1
	SEHI-175	98.1	113	127	139	149	160	169	179	90.9	105	117	128	139	148	158	166
	SEHI-400	199	230	257	282	305	326	345	364	185	214	239	262	283	303	321	338

R-404A Capacities in kW (at Evaporator Temperature °C)

	VALVE TYPE	5°C								-10°C								-20°C							
		Pressure Drop Across Valve (bar)																							
		4	6	8	10	12	14	16	18	4	6	8	10	12	14	16	18	4	6	8	10	12	14	16	18
R-404A	SER-B	4.36	5.34	6.16	6.89	7.55	8.15	8.72	9.24	4.06	4.97	5.74	6.42	7.03	7.60	8.12	8.62	3.85	4.71	5.44	6.08	6.66	7.20	7.69	8.16
	SER-C	11.8	14.5	16.7	18.7	20.5	22.1	23.6	25.1	11.0	13.5	15.6	17.4	19.1	20.6	22.0	23.4	10.4	12.8	14.8	16.5	18.1	19.5	20.9	22.1
	SER-D	24.0	29.4	34.0	38.0	41.6	45.0	48.1	51.0	22.4	27.4	31.7	35.4	38.8	41.9	44.8	47.5	21.2	26.0	30.0	33.6	36.8	39.7	42.4	45.0
	SERI-G	47.1	57.5	66.4	74.4	81.4	87.9	94.0	99.6	43.6	53.4	61.6	69.1	75.6	81.6	87.3	92.6	41.2	50.5	58.4	65.2	71.4	77.1	82.5	87.5
	SERI-J	84.5	104	120	134	146	158	169	179	78.5	96.2	111	124	136	147	156	167	74.2	90.8	105	117	128	139	148	156
	SERI-K	153	188	216	242	265	287	307	325	142	174	201	225	247	266	285	302	134	165	191	213	233	252	269	285
	SERI-L	205	251	289	324	355	383	409	434	191	234	270	302	330	357	382	405	181	221	256	286	313	338	361	383
	SEHI-175	364	446	515	575	631	681	728	772	338	414	478	534	586	633	676	718	319	391	452	505	553	598	639	678
	SEHI-400	736	902	1041	1164	1275	1378	1473	1562	686	841	971	1085	1189	1284	1373	1456	650	796	919	1028	1126	1216	1300	1379

	VALVE TYPE	-30°C								-40°C							
		Pressure Drop Across Valve (bar)															
		4	6	8	10	12	14	16	18	4	6	8	10	12	14	16	18
R-404A	SER-B	3.62	4.44	5.12	5.73	6.28	6.78	7.25	7.69	3.39	4.16	4.80	5.37	5.88	6.35	6.79	7.20
	SER-C	9.83	12.0	13.9	15.5	17.0	18.4	19.7	20.8	9.20	11.3	13.0	14.5	15.9	17.2	18.4	19.5
	SER-D	20.0	24.5	28.3	31.6	34.6	37.4	40.0	42.4	18.7	22.9	26.5	29.6	32.4	35.0	37.4	39.7
	SERI-G	38.7	47.4	54.8	61.2	67.1	72.4	77.4	82.1	36.1	44.4	51.1	57.1	62.6	67.6	72.4	76.7
	SERI-J	69.6	85.3	98.5	110	121	131	139	148	65.1	79.6	91.9	103	113	122	131	138
	SERI-K	126	155	179	200	219	236	253	268	118	144	167	186	204	221	236	251
	SERI-L	170	208	241	269	295	318	340	361	159	195	225	252	276	298	319	338
	SEHI-175	300	367	425	474	520	561	600	636	280	342	396	442	485	524	560	594
	SEHI-400	612	750	866	968	1061	1146	1225	1299	573	702	811	907	993	1073	1147	1216

Liquid Temperature Correction Factors

°F	0	10	20	30	40	50	60	70	80	90	100	110	120	130	140
°C	-18	-12	-7	-1	4	10	16	21	27	32	38	43	49	54	60
R-404A	2.04	1.94	1.84	1.74	1.64	1.54	1.43	1.33	1.22	1.11	1.00	0.89	0.77	0.65	0.53

R-407A Capacities in Tons (at Evaporator Temperature °F)

	VALVE TYPE	40°F								20°F								0°F							
		Pressure Drop Across Valve (psid)																							
		75	100	125	150	175	200	225	250	75	100	125	150	175	200	225	250	75	100	125	150	175	200	225	250
R-407A	SER-B	2.03	2.34	2.62	2.87	3.10	3.31	3.52	3.71	1.94	2.24	2.50	2.74	2.96	3.16	3.35	3.54	1.84	2.12	2.38	2.60	2.81	3.00	3.19	3.36
	SER-C	5.50	6.35	7.10	7.78	8.41	8.99	9.53	10.0	5.25	6.06	6.78	7.43	8.02	8.58	9.10	9.59	4.99	5.76	6.44	7.06	7.62	8.15	8.64	9.11
	SER-D	11.2	12.9	14.5	15.8	17.1	18.3	19.4	20.4	10.7	12.3	13.8	15.1	16.3	17.4	18.5	19.5	10.1	11.7	13.1	14.4	15.5	16.6	17.6	18.5
	SERI-G	21.5	24.8	27.8	30.4	32.8	35.1	37.2	39.3	20.5	23.7	26.5	29.0	31.3	33.5	35.5	37.5	19.5	22.5	25.2	27.6	29.8	31.8	33.8	35.6
	SERI-J	38.7	44.7	50.0	54.7	59.1	63.2	67.0	70.7	36.9	42.7	47.7	52.2	56.4	60.3	64.0	67.4	35.1	40.5	45.3	49.6	53.6	57.3	60.8	64.1
	SERI-K	70.2	81.0	90.6	99.2	107	115	122	128	67.0	77.3	86.4	94.7	102	109	116	122	63.6	73.4	82.1	90.0	97.2	104	110	116
	SERI-L	95.3	110	123	135	146	156	165	174	91.0	105	117	129	139	149	158	166	86.4	99.8	112	122	132	141	150	158
	SEHI-175	166	192	214	235	254	271	288	303	158	183	205	224	242	259	274	289	151	174	194	213	230	246	261	275
	SEHI-400	351	406	454	497	537	574	609	642	335	387	433	474	512	548	581	612	319	368	411	451	487	520	552	582

R-407A Capacities in kW (at Evaporator Temperature °C)

	VALVE TYPE	5°C								-10°C								-20°C							
		Pressure Drop Across Valve (bar)																							
		4	6	8	10	12	14	16	18	4	6	8	10	12	14	16	18	4	6	8	10	12	14	16	18
R-407A	SER-B	6.28	7.69	8.88	9.93	10.9	11.7	12.6	13.3	5.90	7.22	8.34	9.32	10.2	11.0	11.8	12.5	5.62	6.88	7.95	8.89	9.73	10.5	11.2	11.9
	SER-C	17.0	20.9	24.1	26.9	29.5	31.9	34.1	36.1	16.0	19.6	22.6	25.3	27.7	29.9	32.0	33.9	15.2	18.7	21.6	24.1	26.4	28.5	30.5	32.3
	SER-D	34.6	42.4	49.0	54.8	60.0	64.8	69.3	73.5	32.5	39.8	46.0	51.4	56.3	60.9	65.1	69.0	31.0	38.0	43.8	49.0	53.7	58.0	62.0	65.8
	SERI-G	66.5	81.5	94.1	105	115	124	133	141	62.5	76.5	88.4	98.8	108	117	125	133	59.6	72.9	84.2	94.2	103	111	119	126
	SERI-J	120	147	169	189	207	224	240	254	112	138	159	178	195	210	225	239	107	131	152	169	186	201	214	227
	SERI-K	217	266	307	343	376	406	434	461	204	250	288	322	353	381	408	432	194	238	275	307	337	363	389	412
	SERI-L	295	361	417	466	511	552	590	626	277	339	392	438	480	518	554	588	264	323	373	417	457	494	528	560
	SEHI-175	514	629	727	812	890	961	1028	1090	482	591	682	763	836	903	965	1023	460	563	650	727	796	860	920	975
	SEHI-400	1088	1332	1538	1720	1884	2035	2175	2307	1021	1251	1444	1615	1769	1911	2043	2166	973	1192	1377	1539	1686	1821	1947	2065

R-407C Capacities in Tons (at Evaporator Temperature °F)

	VALVE TYPE	40°F								20°F								0°F							
		Pressure Drop Across Valve (psi)																							
		75	100	125	150	175	200	225	250	75	100	125	150	175	200	225	250	75	100	125	150	175	200	225	250
R-407C	SER-B	2.05	2.37	2.65	2.90	3.13	3.35	3.55	3.74	1.98	2.28	2.55	2.80	3.02	3.23	3.43	3.61	1.90	2.20	2.45	2.69	2.90	3.10	3.29	3.47
	SER-C	5.56	6.42	7.18	7.86	8.49	9.08	9.63	10.1	5.36	6.19	6.92	7.59	8.19	8.76	9.29	9.79	5.15	5.95	6.65	7.29	7.87	8.42	8.93	9.41
	SER-D	11.3	13.1	14.6	16.0	17.3	18.5	19.6	20.6	10.9	12.6	14.1	15.4	16.7	17.8	18.9	19.9	10.5	12.1	13.5	14.8	16.0	17.1	18.2	19.1
	SERI-G	21.1	24.4	27.3	29.9	32.4	34.5	36.6	38.6	20.2	23.4	26.2	28.7	30.9	33.2	35.2	37.1	19.4	22.4	25.1	27.4	29.6	31.6	33.5	35.3
	SERI-J	38.0	43.9	49.1	53.8	58.1	62.1	65.8	69.4	36.5	42.1	47.2	51.6	55.8	59.6	63.3	66.7	34.8	40.2	45.1	49.3	53.2	56.9	60.4	63.6
	SERI-K	68.9	79.6	89.1	97.5	105	113	119	126	66.2	76.5	85.4	93.6	101	108	115	121	63.2	72.9	81.5	89.3	96.5	103	109	115
	SERI-L	96.3	111	124	136	147	157	167	176	92.9	107	120	131	142	152	161	170	89.3	103	115	126	136	146	155	163
	SEHI-175	164	189	212	232	249	267	284	299	156	181	202	222	240	256	272	287	149	173	194	212	229	245	260	274
	SEHI-400	346	400	447	490	529	566	600	632	334	386	432	473	511	546	579	610	321	371	415	454	491	525	556	586

R-407C Capacities in kW (at Evaporator Temperature °C)

	VALVE TYPE	5°C								-10°C								-20°C							
		Pressure Drop Across Valve (bar)																							
		4	6	8	10	12	14	16	18	4	6	8	10	12	14	16	18	4	6	8	10	12	14	16	18
R-407C	SER-B	6.35	7.78	8.98	10.0	11.0	11.9	12.7	13.5	6.05	7.41	8.55	9.56	10.5	11.3	12.1	12.8	5.83	7.14	8.25	9.22	10.1	10.9	11.7	12.4
	SER-C	17.2	21.1	24.4	27.2	29.8	32.2	34.4	36.5	16.4	20.1	23.2	25.9	28.4	30.7	32.8	34.8	15.8	19.4	22.4	25.0	27.4	29.6	31.6	33.5
	SER-D	35.0	42.9	49.5	55.4	60.7	65.5	70.1	74.3	33.4	40.9	47.2	52.7	57.8	62.4	66.7	70.8	32.2	39.4	45.5	50.8	55.7	60.2	64.3	68.2
	SERI-G	65.3	79.9	92.4	103	113	122	131	138	61.6	75.5	87.2	97.5	107	115	124	131	59.1	72.4	83.6	93.5	102	111	118	125
	SERI-J	117	144	166	186	204	220	235	249	111	136	156	175	192	208	222	235	106	131	151	168	184	199	213	226
	SERI-K	213	261	301	336	369	398	426	452	201	246	284	318	348	376	402	427	193	236	273	305	334	361	386	409
	SERI-L	298	365	422	472	517	558	597	633	284	348	402	449	492	532	568	603	274	335	387	433	474	512	548	581
	SEHI-175	506	619	715	800	875	946	1012	1073	478	585	675	755	827	894	955	1013	458	561	647	724	793	856	915	972
	SEHI-400	1073	1315	1518	1697	1859	2008	2147	2277	1022	1252	1446	1616	1770	1912	2044	2168	985	1207	1393	1558	1707	1843	1971	2090

Liquid Temperature Correction Factors

°F	0	10	20	30	40	50	60	70	80	90	100	110	120	130	140
°C	-18	-12	-7	-1	4	10	16	21	27	32	38	43	49	54	60
R-407A	1.76	1.68	1.61	1.53	1.46	1.39	1.31	1.24	1.16	1.08	1.00	0.92	0.83	0.74	0.64
R-407C	1.69	1.62	1.55	1.49	1.42	1.35	1.28	1.21	1.14	1.07	1.00	0.93	0.85	0.77	0.69

R-410A Capacities in Tons (at Evaporator Temperature °F)

R-410A	VALVE TYPE	40°F								20°F								0°F							
		Pressure Drop Across Valve (psid)																							
		80	120	160	200	240	280	320	360	80	120	160	200	240	280	320	360	80	120	160	200	240	280	320	360
	SER-B	2.10	2.57	2.97	3.32	3.64	3.93	4.20	4.45	2.05	2.52	2.91	3.25	3.56	3.84	4.11	4.36	2.00	2.45	2.83	3.16	3.46	3.74	4.00	4.24
	SER-C	5.69	6.97	8.05	9.00	9.86	10.6	11.4	12.1	5.57	6.82	7.88	8.81	9.65	10.4	11.1	11.8	5.42	6.64	7.67	8.57	9.39	10.1	10.8	11.5
	SER-D	11.6	14.2	16.4	18.3	20.1	21.7	23.2	24.6	11.3	13.9	16.0	17.9	19.6	21.2	22.7	24.0	11.0	13.5	15.6	17.4	19.1	20.6	22.1	23.4
	SERI-G	22.5	27.5	31.8	35.5	38.9	42.1	45.1	47.8	22.0	26.9	31.1	34.7	38.0	41.1	43.9	46.6	21.3	26.1	30.1	33.8	36.9	39.9	42.7	45.3
	SERI-J	40.5	49.6	57.3	64.0	70.1	75.8	80.9	85.9	39.5	48.4	55.9	62.5	68.5	73.9	79.1	83.8	38.4	47.1	54.2	60.7	66.5	71.8	76.7	81.4
	SERI-K	73.4	89.9	104	116	127	138	147	155	71.6	87.8	101	113	124	134	144	152	69.5	85.2	98.4	110	120	131	139	147
	SERI-L	98.6	121	139	156	171	184	197	209	96.5	118	136	153	167	181	193	205	93.9	115	133	149	163	176	188	199
	SEHI-175	174	214	247	275	302	326	348	369	171	208	240	269	294	319	340	361	165	202	234	261	286	309	331	351
	SEHI-400	–	–	–	–	–	–	–	–	–	–	–	–	–	–	–	–	–	–	–	–	–	–	–	–

R-410A Capacities in kW (at Evaporator Temperature °C)

R-410A	VALVE TYPE	5°C								-10°C								-20°C							
		Pressure Drop Across Valve (bar)																							
		5	8	11	14	17	20	23	26	5	8	11	14	17	20	23	26	5	8	11	14	17	20	23	26
	SER-B	7.03	8.89	10.4	11.8	13.0	14.1	15.1	16.0	6.88	8.70	10.2	11.5	12.7	13.8	14.8	15.7	6.70	8.47	9.93	11.2	12.3	13.4	14.4	15.3
	SER-C	19.1	24.1	28.3	31.9	35.1	38.1	40.9	43.5	18.7	23.6	27.7	31.2	34.4	37.3	40.0	42.5	18.2	23.0	26.9	30.4	33.5	36.3	38.9	41.4
	SER-D	38.8	49.0	57.5	64.9	71.5	77.5	83.2	88.4	37.9	48.0	56.3	63.5	70.0	75.9	81.4	86.5	36.9	46.7	54.8	61.8	68.1	73.9	79.2	84.2
	SERI-G	75.2	95.1	112	126	139	151	161	171	72.7	91.9	108	122	134	145	156	166	70.7	89.5	105	118	131	141	152	161
	SERI-J	135	171	201	226	249	271	291	309	131	165	194	219	241	262	280	298	127	161	189	213	235	255	273	291
	SERI-K	245	311	364	411	452	491	526	559	236	300	352	396	436	474	509	541	231	292	342	386	425	461	495	526
	SERI-L	330	418	490	553	609	660	708	753	323	409	479	541	596	646	693	737	315	398	467	526	580	629	675	717
	SEHI-175	582	736	865	975	1074	1165	1249	1328	564	712	835	942	1039	1126	1208	1284	548	693	813	916	1011	1096	1175	1249
	SEHI-400	–	–	–	–	–	–	–	–	–	–	–	–	–	–	–	–	–	–	–	–	–	–	–	–

R-422D Capacities in Tons (at Evaporator Temperature °F)

R-422D	VALVE TYPE	40°F								20°F								0°F							
		Pressure Drop Across Valve (psid)																							
		75	100	125	150	175	200	225	250	75	100	125	150	175	200	225	250	75	100	125	150	175	200	225	250
	SER-B	1.48	1.71	1.91	2.09	2.26	2.41	2.56	2.70	1.40	1.61	1.80	1.97	2.13	2.28	2.42	2.55	1.31	1.51	1.69	1.85	2.00	2.14	2.27	2.39
	SER-C	4.01	4.63	5.17	5.67	6.12	6.54	6.94	7.32	3.79	4.37	4.89	5.35	5.78	6.18	6.56	6.91	3.55	4.10	4.59	5.03	5.43	5.80	6.16	6.49
	SER-D	8.15	9.41	10.5	11.5	12.5	13.3	14.1	14.9	7.70	8.89	9.94	10.9	11.8	12.6	13.3	14.1	7.23	8.35	9.33	10.2	11.0	11.8	12.5	13.2
	SERI-G	15.7	18.1	20.2	22.1	23.9	25.6	27.1	28.6	14.8	17.1	19.1	20.9	22.6	24.2	25.6	27.0	13.9	16.0	17.9	19.6	21.2	22.7	24.1	25.4
	SERI-J	28.2	32.5	36.4	39.9	43.1	46.0	48.8	51.5	26.6	30.7	34.4	37.7	40.7	43.5	46.1	48.6	25.0	28.9	32.3	35.4	38.2	40.8	43.3	45.6
	SERI-K	51.1	59.0	66.0	72.3	78.0	83.4	88.5	93.3	48.3	55.7	62.3	68.3	73.7	78.8	83.6	88.1	45.3	52.3	58.5	64.1	69.2	74.0	78.5	82.7
	SERI-L	69.4	80.2	89.6	98.2	106	113	120	127	65.6	75.7	84.7	92.8	100	107	114	120	61.6	71.1	79.5	87.1	94.1	101	107	112
	SEHI-175	121	140	156	171	185	197	209	221	114	132	147	162	174	187	198	209	107	124	138	152	164	175	186	196
	SEHI-400	256	296	330	362	391	418	443	467	242	279	312	342	369	395	419	441	227	262	293	321	347	371	393	414

R-422D Capacities in kW (at Evaporator Temperature °C)

R-422D	VALVE TYPE	5°C								-10°C								-20°C							
		Pressure Drop Across Valve (bar)																							
		4	6	8	10	12	14	16	18	4	6	8	10	12	14	16	18	4	6	8	10	12	14	16	18
	SER-B	4.57	5.59	6.46	7.22	7.91	8.54	9.13	9.68	4.23	5.18	5.98	6.69	7.33	7.92	8.46	8.98	3.99	4.88	5.64	6.31	6.91	7.46	7.98	8.46
	SER-C	12.4	15.2	17.5	19.6	21.4	23.2	24.8	26.3	11.5	14.1	16.2	18.1	19.9	21.5	22.9	24.3	10.8	13.2	15.3	17.1	18.7	20.2	21.6	22.9
	SER-D	25.2	30.8	35.6	39.8	43.6	47.1	50.4	53.4	23.3	28.6	33.0	36.9	40.4	43.7	46.7	49.5	22.0	26.9	31.1	34.8	38.1	41.2	44.0	46.7
	SERI-G	48.4	59.2	68.4	76.5	83.8	90.5	96.7	103	44.8	54.9	63.4	70.9	77.6	83.9	89.7	95.1	42.3	51.7	59.8	66.8	73.2	79.0	84.5	89.6
	SERI-J	87.1	107	123	138	151	163	174	185	80.7	98.8	114	128	140	151	161	171	76.0	93.1	108	120	132	142	152	161
	SERI-K	158	193	223	250	273	295	316	335	146	179	207	231	253	274	293	310	138	169	195	218	239	258	276	292
	SERI-L	214	263	303	339	371	401	429	455	199	243	281	314	344	372	398	422	187	229	265	296	324	350	375	397
	SEHI-175	373	457	528	591	647	699	747	792	346	424	490	547	600	648	692	734	326	400	461	516	565	610	653	692
	SEHI-400	791	968	1118	1250	1369	1479	1581	1677	733	897	1036	1159	1269	1371	1465	1554	691	846	977	1092	1196	1292	1381	1465

Liquid Temperature Correction Factors

°F	0	10	20	30	40	50	60	70	80	90	100	110	120	130	140
°C	-18	-12	-7	-1	4	10	16	21	27	32	38	43	49	54	60
R-410A	1.61	1.55	1.49	1.43	1.39	1.31	1.23	1.17	1.12	1.06	1.00	0.94	0.88	0.82	0.76
R-422D	1.99	1.90	1.80	1.70	1.60	1.50	1.41	1.31	1.20	1.10	1.00	0.90	0.79	0.68	0.57

R-507A Capacities in Tons (at Evaporator Temperature °F)

	VALVE TYPE	40°F								20°F								0°F							
		Pressure Drop Across Valve (psid)																							
		75	100	125	150	175	200	225	250	75	100	125	150	175	200	225	250	75	100	125	150	175	200	225	250
R-507A	SER-B	1.36	1.57	1.76	1.93	2.08	2.22	2.36	2.49	1.29	1.49	1.67	1.83	1.97	2.11	2.24	2.36	1.22	1.41	1.57	1.72	1.86	1.99	2.11	2.22
	SER-C	3.69	4.26	4.77	5.22	5.64	6.03	6.40	6.74	3.50	4.05	4.52	4.96	5.35	5.72	6.07	6.40	3.30	3.81	4.26	4.67	5.04	5.39	5.72	6.03
	SER-D	7.51	8.67	9.70	10.6	11.5	12.3	13.0	13.7	7.13	8.23	9.20	10.1	10.9	11.6	12.3	13.0	6.71	7.75	8.67	9.50	10.3	11.0	11.6	12.3
	SERI-G	14.9	17.2	19.2	21.1	22.8	24.4	25.8	27.2	14.1	16.4	18.2	20.0	21.6	23.1	24.5	25.8	13.3	15.3	17.2	18.8	20.4	21.6	23.1	24.4
	SERI-J	26.8	31.1	34.6	37.9	41.1	43.8	46.4	49.1	25.4	29.3	32.8	35.9	38.8	41.5	44.0	46.4	23.9	27.6	30.9	33.8	36.5	39.1	41.4	43.6
	SERI-K	48.6	56.1	62.8	68.7	74.4	79.4	84.2	88.8	46.0	53.2	59.5	65.1	70.4	75.2	79.8	84.1	43.4	50.1	56.0	61.3	66.2	70.8	75.1	79.2
	SERI-L	64.0	73.9	82.6	90.5	97.7	104	111	117	60.7	70.1	78.4	85.8	92.7	99.1	105	111	57.2	66.0	73.8	80.9	87.4	93.4	99.0	104
	SEHI-175	115	133	149	164	176	188	200	211	109	126	141	154	167	179	189	200	103	119	133	146	158	168	179	188
	SEHI-400	230	266	297	325	352	376	399	420	218	252	282	309	334	357	378	399	206	238	266	291	314	336	356	376

	VALVE TYPE	-20°F								-40°F							
		Pressure Drop Across Valve (psid)															
		75	100	125	150	175	200	225	250	75	100	125	150	175	200	225	250
R-507A	SER-B	1.14	1.31	1.47	1.61	1.74	1.86	1.97	2.08	1.06	1.22	1.36	1.49	1.61	1.73	1.83	1.93
	SER-C	3.09	3.56	3.98	4.36	4.71	5.04	5.35	5.63	2.86	3.31	3.70	4.05	4.38	4.68	4.96	5.23
	SER-D	6.28	7.25	8.10	8.88	9.59	10.3	10.9	11.5	5.83	6.73	7.52	8.24	8.90	9.51	10.1	10.6
	SERI-G	12.4	14.4	16.1	17.6	19.1	20.4	21.5	22.7	11.6	13.4	14.9	16.4	17.6	18.9	20.0	21.1
	SERI-J	22.4	25.8	28.9	31.6	34.2	36.6	38.8	40.9	20.8	24.0	26.9	29.4	31.8	34.0	36.0	38.0
	SERI-K	40.6	46.9	52.4	57.4	62.0	66.4	70.4	74.1	37.6	43.6	48.7	53.4	57.6	61.6	65.3	68.9
	SERI-L	53.5	61.7	69.0	75.6	81.7	87.3	92.6	97.6	49.6	57.3	64.1	70.2	75.8	81.0	85.9	90.6
	SEHI-175	96.4	111	125	136	147	158	167	176	89.6	103	116	127	136	146	155	164
	SEHI-400	192	222	248	272	294	314	333	351	179	206	230	252	273	292	309	326

R-507A Capacities in kW (at Evaporator Temperature °C)

	VALVE TYPE	5°C								-10°C								-20°C							
		Pressure Drop Across Valve (bar)																							
		4	6	8	10	12	14	16	18	4	6	8	10	12	14	16	18	4	6	8	10	12	14	16	18
R-507A	SER-B	4.22	5.17	5.97	6.68	7.31	7.90	8.44	8.96	3.93	4.81	5.56	6.21	6.81	7.35	7.86	8.33	3.72	4.55	5.26	5.88	6.44	6.96	7.44	7.89
	SER-C	11.4	14.0	16.2	18.1	19.8	21.4	22.9	24.3	10.7	13.0	15.1	16.8	18.5	19.9	21.3	22.6	10.1	12.3	14.3	15.9	17.5	18.9	20.2	21.4
	SER-D	23.3	28.5	32.9	36.8	40.3	43.6	46.6	49.4	21.7	26.5	30.6	34.3	37.5	40.5	43.3	46.0	20.5	25.1	29.0	32.4	35.5	38.4	41.0	43.5
	SERI-G	46.0	56.4	65.1	72.8	79.6	86.1	92.1	97.6	42.7	52.4	60.4	67.6	74.0	80.0	85.5	90.7	40.4	49.5	57.2	63.9	70.0	75.6	80.8	85.8
	SERI-J	82.8	101	117	131	144	155	166	176	76.9	94.2	109	122	133	144	154	164	72.7	89.1	103	115	126	136	145	154
	SERI-K	151	184	212	236	260	281	300	319	139	171	196	220	241	261	279	296	132	162	186	209	228	247	264	280
	SERI-L	198	243	280	314	344	371	397	421	185	226	261	292	320	345	369	392	175	214	247	276	302	327	349	370
	SEHI-175	356	436	505	564	618	667	713	756	331	406	468	524	573	619	662	702	313	384	442	495	542	586	626	665
	SEHI-400	713	874	1009	1128	1236	1335	1427	1514	664	813	939	1050	1150	1242	1328	1408	628	769	888	993	1088	1175	1256	1333

	VALVE TYPE	-30°C								-40°C							
		Pressure Drop Across Valve (bar)															
		4	6	8	10	12	14	16	18	4	6	8	10	12	14	16	18
R-507A	SER-B	3.50	4.28	4.94	5.53	6.06	6.54	6.99	7.42	3.27	4.00	4.62	5.17	5.66	6.11	6.54	6.93
	SER-C	9.48	11.6	13.4	15.0	16.4	17.7	19.0	20.1	8.86	10.9	12.5	14.0	15.3	16.6	17.7	18.8
	SER-D	19.3	23.6	27.3	30.5	33.4	36.1	38.6	40.9	18.0	22.1	25.5	28.5	31.2	33.7	36.0	38.2
	SERI-G	38.0	46.6	53.8	60.2	65.9	71.2	76.1	80.7	35.6	43.6	50.4	56.4	61.6	66.6	71.2	75.5
	SERI-J	68.4	83.8	96.8	108	119	128	136	145	64.1	78.5	90.6	101	111	120	128	136
	SERI-K	124	152	176	196	215	232	248	264	116	142	164	184	201	216	232	246
	SERI-L	164	201	232	260	284	307	328	348	153	188	217	243	266	287	307	326
	SEHI-175	295	361	416	466	511	552	589	625	275	338	391	436	478	516	552	585
	SEHI-400	591	724	836	934	1023	1105	1182	1253	552	676	781	873	956	1033	1104	1171

Liquid Temperature Correction Factors

°F	0	10	20	30	40	50	60	70	80	90	100	110	120	130	140
°C	-18	-12	-7	-1	4	10	16	21	27	32	38	43	49	54	60
R-507A	1.99	1.89	1.79	1.69	1.59	1.50	1.40	1.30	1.20	1.10	1.00	0.89	0.78	0.66	0.51

R-744 Capacities in Tons (at Evaporator Temperature °F)

	VALVE TYPE	0°F					-20°F					-40°F				
		Pressure Drop Across Valve (psid)														
		100	150	200	250	300	150	200	250	300	350	200	250	300	350	400
R-744	SER-B	3.65	4.47	5.16	5.77	6.32	4.47	5.17	5.78	6.33	6.83	5.13	5.74	6.29	6.79	7.26
	SER-C	9.90	12.1	14.0	15.6	17.1	12.1	14.0	15.7	17.2	18.5	13.9	15.6	17.0	18.4	19.7
	SER-D	20.1	24.7	28.5	31.8	34.9	24.7	28.5	31.9	34.9	37.7	28.3	31.7	34.7	37.5	40.0
	SERI-G	38.6	47.3	54.7	61.1	66.9	47.4	54.7	61.2	66.9	72.4	54.4	60.8	66.6	71.9	76.8
	SERI-J	69.5	85.2	98.4	110	120	85.3	98.5	110	120	131	97.8	109	120	129	139
	SERI-K	126	154	179	199	219	154	179	200	219	236	178	199	218	234	251
	SERI-L	171	210	242	271	297	210	243	271	297	321	241	270	295	319	341
	SEHI-175	–	–	–	–	–	–	–	–	–	–	–	–	–	–	–
	SEHI-400	–	–	–	–	–	–	–	–	–	–	–	–	–	–	–

R-744 Capacities in kW (at Evaporator Temperature °C)

	VALVE TYPE	-20°C				-30°C				-40°C			
		Pressure Drop Across Valve (bar)											
		8	12	16	20	12	16	20	24	16	20	24	28
R-744	SER-B	13.8	16.9	19.6	21.9	16.9	19.6	21.9	24.0	19.4	21.7	23.8	25.7
	SER-C	37.5	46.0	53.1	59.3	45.9	53.0	59.3	65.0	52.7	59.0	64.6	69.8
	SER-D	76.3	93.5	108	121	93	108	121	132	107	120	131	142
	SERI-G	144	175	204	227	175	204	227	248	202	226	247	267
	SERI-J	259	316	366	408	316	365	408	447	364	406	445	480
	SERI-K	468	574	662	741	573	662	740	811	659	736	806	871
	SERI-L	650	796	919	1028	796	919	1027	1125	913	1021	1119	1208
	SEHI-175	–	–	–	–	–	–	–	–	–	–	–	–
	SEHI-400	–	–	–	–	–	–	–	–	–	–	–	–

Liquid Temperature Correction Factors

°F	0	10	20	30	40	50	60	70	80	90	100	110	120	130	140
°C	-18	-12	-7	-1	4	10	16	21	27	32	38	43	49	54	60
R-744	1.13	1.07	1.00	0.93	0.86	–	–	–	–	–	–	–	–	–	–

OFFER OF SALE

The items described in this document and other documents and descriptions provided by Parker Hannifin Corporation, its subsidiaries and its authorized distributors ("Seller") are hereby offered for sale at prices to be established by Seller. This offer and its acceptance by any customer ("Buyer") shall be governed by all of the following Terms and Conditions. Buyer's order for any item described in its document, when communicated to Seller verbally, or in writing, shall constitute acceptance of this offer. All goods or work described will be referred to as "Products".

1. **Terms and Conditions.** Seller's willingness to offer Products, or accept an order for Products, to or from Buyer is expressly conditioned on Buyer's assent to these Terms and Conditions and to the terms and conditions found on-line at www.parker.com/saleterms/. Seller objects to any contrary or additional term or condition of Buyer's order or any other document issued by Buyer.

2. **Price Adjustments; Payments.** Prices stated on the reverse side or preceding pages of this document are valid for 30 days. After 30 days, Seller may change prices to reflect any increase in its costs resulting from state, federal or local legislation, price increases from its suppliers, or any change in the rate, charge, or classification of any carrier. The prices stated on the reverse or preceding pages of this document do not include any sales, use, or other taxes unless so stated specifically. Unless otherwise specified by Seller, all prices are F.O.B. Seller's facility, and payment is due 30 days from the date of invoice. After 30 days, Buyer shall pay interest on any unpaid invoices at the rate of 1.5% per month or the maximum allowable rate under applicable law.

3. **Delivery Dates; Title and Risk; Shipment.** All delivery dates are approximate and Seller shall not be responsible for any damages resulting from any delay. Regardless of the manner of shipment, title to any products and risk of loss or damage shall pass to Buyer upon tender to the carrier at Seller's facility (i.e., when it's on the truck, it's yours). Unless otherwise stated, Seller may exercise its judgment in choosing the carrier and means of delivery. No deferment of shipment at Buyers' request beyond the respective dates indicated will be made except on terms that will indemnify, defend and hold Seller harmless against all loss and additional expense. Buyer shall be responsible for any additional shipping charges incurred by Seller due to Buyer's changes in shipping, product specifications or in accordance with Section 13, herein.

4. **Warranty.** Seller warrants that the Products sold hereunder shall be free from defects in material or workmanship for a period of twelve months from the date of delivery to Buyer or 2,000 hours of normal use, whichever occurs first. This warranty is made only to Buyer and does not extend to anyone to whom Products are sold after purchased from Seller. The prices charged for Seller's products are based upon the exclusive limited warranty stated above, and upon the following disclaimer: **DISCLAIMER OF WARRANTY: THIS WARRANTY COMPRISES THE SOLE AND ENTIRE WARRANTY PERTAINING TO PRODUCTS PROVIDED HEREUNDER. SELLER DISCLAIMS ALL OTHER WARRANTIES, EXPRESS AND IMPLIED, INCLUDING MERCHANTABILITY AND FITNESS FOR A PARTICULAR PURPOSE.**

5. **Claims; Commencement of Actions.** Buyer shall promptly inspect all Products upon delivery. No claims for shortages will be allowed unless reported to the Seller within 10 days of delivery. No other claims against Seller will be allowed unless asserted in writing within 60 days after delivery or, in the case of an alleged breach of warranty, within 30 days after the date within the warranty period on which the defect is or should have been discovered by Buyer. Any action based upon breach of this agreement or upon any other claim arising out of this sale (other than an action by Seller for any amount due to Seller from Buyer) must be commenced within thirteen months from the date of tender of delivery by Seller or, for a cause of action based upon an alleged breach of warranty, within thirteen months from the date within the warranty period on which the defect is or should have been discovered by Buyer.

6. **LIMITATION OF LIABILITY.** UPON NOTIFICATION, SELLER WILL, AT ITS OPTION, REPAIR OR REPLACE A DEFECTIVE PRODUCT, OR REFUND THE PURCHASE PRICE. **IN NO EVENT SHALL SELLER BE LIABLE TO BUYER FOR ANY SPECIAL, INDIRECT, INCIDENTAL OR CONSEQUENTIAL DAMAGES ARISING OUT OF, OR AS THE RESULT OF, THE SALE, DELIVERY, NON-DELIVERY, SERVICING, USE OR LOSS OF USE OF THE PRODUCTS OR ANY PART THEREOF, OR FOR ANY CHARGES OR EXPENSES OF ANY NATURE INCURRED WITHOUT SELLER'S WRITTEN CONSENT, EVEN IF SELLER HAS BEEN NEGLIGENT, WHETHER IN CONTRACT, TORT OR OTHER LEGAL THEORY. IN NO EVENT SHALL SELLER'S LIABILITY UNDER ANY CLAIM MADE BY BUYER EXCEED THE PURCHASE PRICE OF THE PRODUCTS.**

7. **Contingencies.** Seller shall not be liable for any default or delay in performance if caused by circumstances beyond the reasonable control of Seller.

8. **User Responsibility.** The user, through its own analysis and testing, is solely responsible for making the final selection of the system and Product and assuring that all performance, endurance, maintenance, safety and warning requirements of the application are met. The user must analyze all aspects of the application and follow applicable industry standards and Product information. If Seller provides Product or system options, the user is responsible for determining that such data and specifications are suitable and sufficient for all applications and reasonably foreseeable uses of the Products or systems.

9. **Loss to Buyer's Property.** Any designs, tools, patterns, materials, drawings, confidential information or equipment furnished by Buyer or any other items which become Buyer's property, may be considered obsolete and may be destroyed by Seller after two consecutive years have elapsed without Buyer placing an order for the items which are manufactured using such property. Seller shall not be responsible for any loss or damage to such property while it is in Seller's possession or control.

10. **Special Tooling.** A tooling charge may be imposed for any special tooling, including without limitation, dies, fixtures, molds and patterns, acquired to manufacture Products. Such special tooling shall be and remain Seller's property notwithstanding payment of any charges by Buyer. In no event will Buyer acquire any interest in apparatus belonging to Seller which is utilized in the manufacture of the Products, even if such apparatus has been specially converted or adapted for such manufacture and notwithstanding any charges paid by Buyer. Unless otherwise agreed, Seller shall have the right to alter, discard or otherwise dispose of any special tooling or other property in its sole discretion at any time.

11. **Buyer's Obligation; Rights of Seller.** To secure payment of all sums due or otherwise, Seller shall retain a security interest in the goods delivered and this agreement shall be deemed a Security Agreement under the Uniform Commercial Code. Buyer authorizes Seller as its attorney to execute and file on Buyer's behalf all documents Seller deems necessary to perfect its security interest. Seller shall have a security interest in, and lien upon, any property of Buyer in Seller's possession as security for the payment of any amounts owed to Seller by Buyer.

12. **Improper use and Indemnity.** Buyer shall indemnify, defend, and hold Seller harmless from any claim, liability, damages, lawsuits, and costs (including attorney fees), whether for personal injury, property damage, patent, trademark or copyright infringement or any other claim, brought by or incurred by Buyer, Buyer's employees, or any other person, arising out of: (a) improper selection, improper application or other misuse of Products purchased by Buyer from Seller; (b) any act or omission, negligent or otherwise, of Buyer; (c) Seller's use of patterns, plans, drawings, or specifications furnished by Buyer to manufacture Product; or (d) Buyer's failure to comply with these terms and conditions. Seller shall not indemnify Buyer under any circumstance except as otherwise provided.

13. **Cancellations and Changes.** Orders shall not be subject to cancellation or change by Buyer for any reason, except with Seller's written consent and upon terms that will indemnify, defend and hold Seller harmless against all direct, incidental and consequential loss or damage. Seller may change product features, specifications, designs and availability with notice to Buyer.

14. **Limitation on Assignment.** Buyer may not assign its rights or obligations under this agreement without the prior written consent of Seller.

15. **Entire Agreement.** This agreement contains the entire agreement between the Buyer and Seller and constitutes the final, complete and exclusive expression of the terms of the agreement. All prior or contemporaneous written or oral agreements or negotiations with respect to the subject matter are herein merged.

16. **Waiver and Severability.** Failure to enforce any provision of this agreement will not waive that provision nor will any such failure prejudice Seller's right to enforce that provision in the future. Invalidation of any provision of this agreement by legislation or other rule of law shall not invalidate any other provision herein. The remaining provisions of this agreement will remain in full force and effect.

17. **Termination.** This agreement may be terminated by Seller for any reason and at any time by giving Buyer thirty (30) days written notice of termination. In addition, Seller may by written notice immediately terminate this agreement for the following: (a) Buyer commits a breach of any provision of this agreement (b) the appointment of a trustee, receiver or custodian for all or any part of Buyer's property (c) the filing of a petition for relief in bankruptcy of the other Party on its own behalf, or by a third party (d) an assignment for the benefit of creditors, or (e) the dissolution or liquidation of the Buyer.

18. **Governing Law.** This agreement and the sale and delivery of all Products hereunder shall be deemed to have taken place in and shall be governed and construed in accordance with the laws of the State of Ohio, as applicable to contracts executed and wholly performed therein and without regard to conflicts of laws principles. Buyer irrevocably agrees and consents to the exclusive jurisdiction and venue of the courts of Cuyahoga County, Ohio with respect to any dispute, controversy or claim arising out of or relating to this agreement. Disputes between the parties shall not be settled by arbitration unless, after a dispute has arisen, both parties expressly agree in writing to arbitrate the dispute.

19. **Indemnity for Infringement of Intellectual Property Rights.** Seller shall have no liability for infringement of any patents, trademarks, copyrights, trade dress, trade secrets or similar rights except as provided in this Section. Seller will defend and indemnify Buyer against allegations of infringement of U.S. patents, U.S. trademarks, copyrights, trade dress and trade secrets ("Intellectual Property Rights"). Seller will defend at its expense and will pay the cost of any settlement or damages awarded in an action brought against Buyer based on an allegation that a Product sold pursuant to this Agreement infringes the Intellectual Property Rights of a third party. Seller's obligation to defend and indemnify Buyer is contingent on Buyer notifying Seller within ten (10) days after Buyer becomes aware of such allegations of infringement, and Seller having sole control over the defense of any allegations or actions including all negotiations for settlement or compromise. If a Product is subject to a claim that it infringes the Intellectual Property Rights of a third party, Seller may, at its sole expense and option, procure for Buyer the right to continue using the Product, replace or modify the Product so as to make it noninfringing, or offer to accept return of the Product and return the purchase price less a reasonable allowance for depreciation. Notwithstanding the foregoing, Seller shall have no liability for claims of infringement based on information provided by Buyer, or directed to Products delivered hereunder for which the designs are specified in whole or part by Buyer, or infringements resulting from the modification, combination or use in a system of any Product sold hereunder. The foregoing provisions of this Section shall constitute Seller's sole and exclusive liability and Buyer's sole and exclusive remedy for infringement of Intellectual Property Rights.

20. **Taxes.** Unless otherwise indicated, all prices and charges are exclusive of excise, sales, use, property, occupational or like taxes which may be imposed by any taxing authority upon the manufacture, sale or delivery of Products.

21. **Equal Opportunity Clause.** For the performance of government contracts and where dollar value of the Products exceed $10,000, the equal employment opportunity clauses in Executive Order 11246, VEVRAA, and 41 C.F.R. §§ 60-1.4(a), 60-741.5(a), and 60-250.4, are hereby incorporated.

© 2018 Parker Hannifin Corporation

42018 / Bulletin 100-20

Parker Hannifin Corporation
Sporlan Division
206 Lange Drive • Washington, MO 63090 USA
phone 636 239 1111 • fax 636 239 9130
www.sporlan.com