hymatik



Fluid Control Solenoid Valves for Process Market



Parker

ENGINEERING YOUR SUCCESS.

Tel: +45 63 12 83 00 | Email: ps@hymatik.com | www.hymatik.com | Hvidkaervej 27a, DK-5250 Odense SV, Denmark



The FCSE 1121UK Catalogue is a selection of Parker FCSE products dedicated to Process applications.
General catalogue FCSE 0112UK is also available and contains a comprehensive list of Parker Fluid Control Products for other markets and general purpose applications.

WARNING - USER RESPONSIBILITY

FAILURE OR IMPROPER SELECTION OR IMPROPER USE OF THE PRODUCTS DESCRIBED HEREIN OR RELATED ITEMS CAN CAUSE DEATH, PERSONAL INJURY AND PROPERTY DAMAGE.

- This document and other information from Parker-Hannifin Corporation, its subsidiaries and authorized distributors provide product or system options for further investigation by users having technical expertise.
- The user, through its own analysis and testing, is solely responsible for making the final selection of the system and components and assuring that all performance, endurance, maintenance, safety and warning requirements of the application are met. The user must analyze all aspects of the application, follow applicable industry standards, and follow the information concerning the product in the current product catalog and in any other materials provided from Parker or its subsidiaries or authorized distributors.
- To the extent that Parker or its subsidiaries or authorized distributors provide component or system options based upon data or specifications provided by the user, the user is responsible for determining that such data and specifications are suitable and sufficient for all applications and reasonably foreseeable uses of the components or systems.

PARKER FCSE

Who we are?

The Fluid Control Solution Europe (FCSE) is a Business Unit of Parker Hannifin, the global leader in motion and control technologies.

Our core competence is the development and manufacturing of an extremely diverse range of fluid control products, including solenoid valves and pressure regulators.

Where we are?

Our European headquarters are located in Gessate (Milan-Italy) , this is also where our R&D, Marketing, Application Support and Product Management functions are located.
Our Products are mainly manufactured in Gessate (Milan - Italy). The Parker Sales Companies and comprehensive distribution network support you, wherever you are.

History

Parker FCSE has been a leading player in the manufacturing and development of solenoid valve technologies for over 60 years, with continuous research and development bringing innovative solutions to the marketplace, for example leading the way in the utilisation of synthetic ruby for critical water applications or the unsurpassed reliability and precision of our pressure regulators. The expertise accumulated and developed through the years is evident in the superior quality of our solutions.

Markets

Our products are typically designed for markets including Industrial Equipment, Industrial Automation, Mobile, Transportation, Life Sciences, Food & Beverage and for Fluid and Process Control.

Benefits

The modular concept of our products, having separate solenoid valves and electrical parts, provides the customer with increased flexibility by allowing numerous combinations. This additional flexibility can enable distributors to greater reduce valve inventory levels, whilst retaining the same number of capabilities. Parker also has unrivalled experience in developing customised product solutions complying with the highest technical, environmental, energy and service life requirements.



PARKER FCSE - MILAN - ITALY

Tel: +45 63 12 83 00 | Email: ps@hymatik.com | www.hymatik.com | Hvidkaervej 27a, DK-5250 Odense SV, Denmark

FLUID CONTROL SOLENOID VALVES FOR PROCESS MARKET
TABLE OF CONTENT

INTRODUCTION

Markets and Applications 6
A modular concept 10
ATEX Certification 12
World class standards 13
Explosive Environments 14
SIL Certification 24
How to use this catalogue 26
How to select a valve 28
How to order 30
How to use coil groups 32

2 WAY VALVES DIRECT OPERATED

K Series - Brass valves for pipe mounting 35
V Series - Stainless steel valves for pipe mounting 39

3 WAY VALVES DIRECT OPERATED

K Series - Brass valves for pipe mounting 45
T Series - Brass valves for T shape mounting 63
F Series - Brass and stainless steel valves for flange mounting 71
V Series - Stainless steel valves for pipe mounting 87
X Series - Brass, aluminium, stainless steel valves for pipe mounting 97
X Series manual reset -Brass, stainless steel manual reset valves for pipe mounting 111
A03 Low Power 119
B04-B14 Series - Banjo valves 123

3 & 5 WAY VALVES PILOT OPERATED

F Series - Brass and Aluminium valves for flange mounting 127
B Series - Aluminium poppet valves for pipe mounting 133
P03-P04 Series - High flow Aluminium spool valves for pipe mounting 151
P01-P02 Series - Spool valves for pipe mounting 161
U331BS Series - High flow brass poppet valves for pipe mounting 179

Tel: +45 63 12 83 00 | Email: ps@hymatik.com | www.hymatik.com | Hvidkaervej 27a, DK-5250 Odense SV, Denmark

3 & 5 WAY VALVES NAMUR DIRECT OPERATED

X Series - Aluminium, stainless steel valves with NAMUR interface 185

3 & 5 WAY VALVES NAMUR PILOT OPERATED

N03-N04-N05 Series - High flow Aluminium spool valves witn NAMUR interface 191
L95 Series - Aluminum poppet valves with NAMUR interface 215
N01 N02 Series - Spool valves with NAMUR interface 221

COILS, HOUSINGS & ELECTRICAL PARTS

Introduction 247
Coils 248
Explosion Proof Electrical Parts 271
Housings 301
Coil Accessories 306
Is-barriers Appendices 308
Table of Voltage Codes for Coils and Electricals Parts 310

TECHNICAL INFORMATION ABOUT SOLENOID VALVES

Technical information about solenoid valves 314

APPENDIX

Index for Explosion Proof Electrical Parts 336
Index by Coil Reference 338
Index by Coil Group 340
Index for Valves 342

Tel: +45 63 12 83 00 | Email: ps@hymatik.com | www.hymatik.com | Hvidkaervej 27a, DK-5250 Odense SV, Denmark

MARKETS AND APPLICATIONS

PROCESS MARKET



The process market covers many different type of industries. Usually these industries prepare or modify raw materials, using different kind of processes.

The raw materials are very diverse, they can be gases, liquids, powders , fibers.

These material flow through process valves, that are controlled by pneumatic actuators, themselves operated by solenoid valves.



PROCESS INDUSTRIES

The industries covered are also very diverse: chemical and petrochemical, power generation, oil & gas, water & sewage, pulp & paper, food industry & pharmaceutical industry.

Plants can be indoor or outdoor, onshore or off shore, operating in harsh environments, with hazardous or safe areas.



PILOT VALVES

All these industries require valves that are efficient and reliable to control their process.

That is why we have designed a range of dedicated pilot valves that meetg all the requirements of the market.

This catalogue brings together the product we can offer.

in order to help the customer to define and choose the right product for their application.



Tel: +45 63 12 83 00 | Email: ps@hymatik.com | www.hymatik.com | Hvidkaervej 27a, DK-5250 Odense SV, Denmark

APPLICATIONS

The Primary application is pneumatic actuator control. Depending on the actuator type, the pilot valve required can be directly mounted on the actuator, following the NAMUR standard (VDI/VDE 3845), or externally connected to the actuator (piped valves).

The majority of pilot valves have a spring return, or fail safe, function.

For some specific applications, bistable valves are also available.





Our products can also be used in other applications such as; HVAC equipment, wellhead control panels, sampling and analyzing, fire dampers control.

BENEFITS

- Every valve body conforms to Mechanical ATEX EN 13 463-1 & 5
- Wide range of combinations valve + coil are SIL3 capable according IEC 61508 and can be used as safety valves
- ATEX electrical parts comply to European directive ATEX 2014/34/EU
- Majority of ATEX electrical parts comply to ATEX international scheme IECEx
- Electrical parts are modular: a coil can be disassembled from a valve very quickly, which is an advantage when the products have been installed, making service and maintenance simple.



- A single valve is able to receive different types of coils, including ATEX, which helps reduction of inventory for end users or distributors
- A coil or a valve can be ordered separately and assembled later by end users or distributors
- Material traceability certificate is available for Offshore applications



Tel: +45 63 12 83 00 | Email: ps@hymatik.com | www.hymatik.com | Hvidkaervej 27a, DK-5250 Odense SV, Denmark

A MODULAR CONCEPT FOR EVERY APPLICATION

CHOOSE BETWEEN:

Actuation Modes

- Direct Operated
- Pilot Operated
- Manual Reset
- Externally Operated

Material Types

- Brass
- 303 Stainless St.
- 316L Stainless St.
- Anodized Aluminium
- POM

Mounting Solutions

- Pipe
- Sub-base
- ISO
- Banjo
- NAMUR

Control Functions

- Normally Closed
- Normally Open
- Universal
- Control by Electric Impulse
- Dual Solenoids

Internal Design

- Piston
- Poppet
- Diaphragm
- Spool

Seals

- FKM
- NBR
- EPDM
- Ruby
- PUR
- PCTFE...

Tel: +45 63 12 83 00 | Email: ps@hymatik.com | www.hymatik.com | Hvidkaervej 27a, DK-5250 Odense SV, Denmark

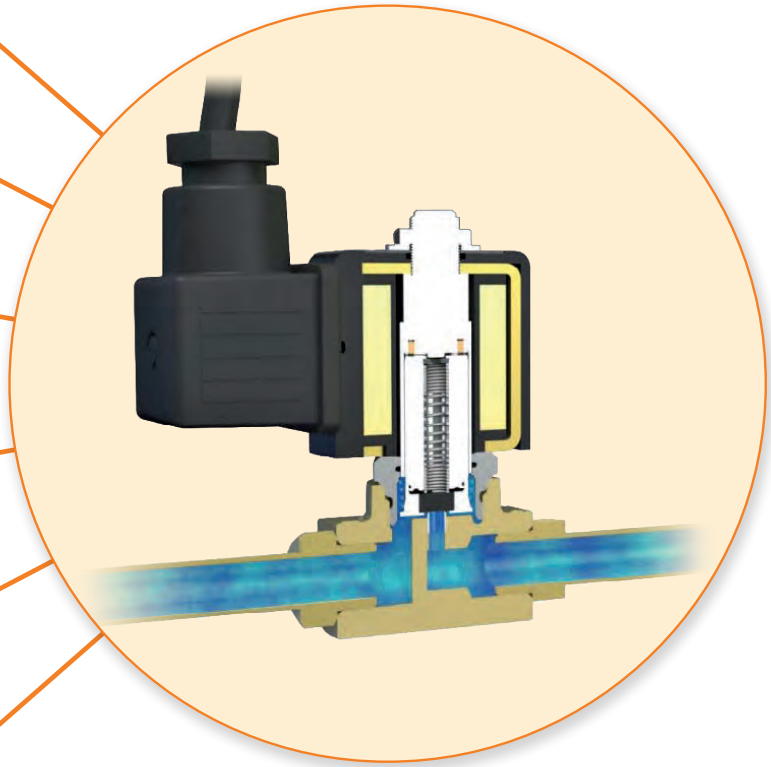

Tel: +45 63 12 83 00 | Email: ps@hymatik.com | www.hymatik.com | Hvidkaervej 27a, DK-5250 Odense SV, Denmark

ATEX CERTIFICATION

ELECTRICAL PART ATEX CERTIFICATION

A selection of electrical parts conform to the terms of the 2014/34/EU directive and are made for potentially explosive environments - zone 0/20, 1/21 and 2/22.

Within the coil section, the presence of the ATEX logo shows that the coil is ATEX approved.



MECHANICAL PART ATEX CERTIFICATION

A selection of mechanical parts conform to the terms of the 2014/34/EU directive specific to non electrical equipment for use within potentially explosive environments - zones 0/20, 1/21 and 2/22.

NAMUR & piped valve ranges now include a marking which indicates mechanical ATEX approval.

Within the valve section, the presence of the ATEX logo shows that the valve is ATEX approved.

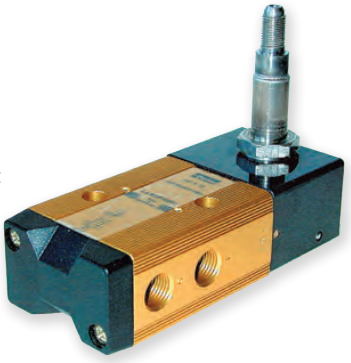

SOLENOID VALVE CERTIFICATION

When both the electrical and mechanical part are ATEX approved, the solenoid valve can be used in explosive atmospheres.

The solenoid valve will be delivered assembled and tested.

(Parker does not take the responsibility of assembly operations performed outside Parker plants)



PARKER FCSE IS MEETING WORLD CLASS STANDARDS

QUALITY STANDARDS

- ISO 9001
- ISO 14001
- OHSAS 18001



CERTIFICATIONS AND APPROVALS

Our products have been approved and are compliant with the relevant market requirements including:

- CE
- ATEX
- RoHS
- UL
- REACH
- IECEx
- CSA
- DIN-TUV
- AGA
- NEPSI
- KOSHA
- IMQ
- NSF
- VDE
- EX EAC

EXPLOSIVE ENVIRONMENTS

INTRODUCTION

The current European Directive concerning equipment to be installed in potentially explosive atmospheres is **2014/34/EU**. It came into force on April 19th, **2016**. With respect to the previous version, it implies the switching from EC to EU Declarations of Conformity and Type Examination Certificates; moreover, it better defines the manufacturer's, importer's and distributor's responsibilities.

Electrical and mechanical equipment for use in potentially explosive atmospheres is certified by a notified body in accordance to the relevant European technical standards concerning each protection mode (m, d, e, i, n, t, h), EN 60079-0 etc. After certification project completion, and EU Type Examination Certificate is released, entitling it to carry the distinctive marking.

EUROPEAN MEMBER COUNTRIES



Tel: +45 63 12 83 00 | Email: ps@hymatik.com | www.hymatik.com | Hvidkaervej 27a, DK-5250 Odense SV, Denmark

DEFINITIONS

EXPLOSIVE ENVIRONMENTS

Mixture with air, under atmospheric conditions, of flammable substances in the form of gases, vapours, mists or dusts in which, after combustion has occurred, combustion spreads to the entire unburned mixture.

HAZARDOUS AREAS

A hazardous area is an area in which an explosive gas environment is present, or may be expected to be present, in quantities such as to require special precautions for construction, installation and use of electrical apparatus.

INGREDIENTS FOR AN EXPLOSION

- When combustible materials are mixed with air, an explosive mixture is produced. Danger of explosion therefore exists wherever these hazardouas materials are handled: such a condition is to be found on the biggest chemical plant as well as at the smallest filling station.
- Nowadays with the use of electronic and electrical instrumentation in process control, the risk of combustion by electrical energy has increased sharply.
- To protect personnel and expensive equipment special precautions should be taken to prevent combustion of those dangerous substances. Conditions likely to ignite explosive mixtures are as follows:

Three conditions are enough to create an explosion.

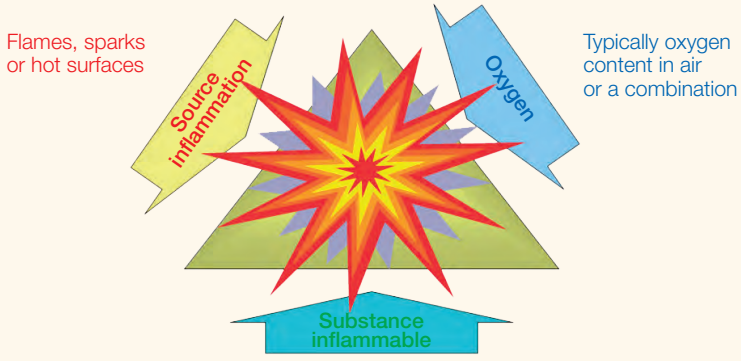

Parker Hannifin Corporation
Fluid Control Solutions Europe
Process Catalogue FCSE/1121/UK/V1.0

EXPLOSIVE ENVIRONMENTS

DEFINITIONS

ZONES

The hazardous areas are classified in zones based on the frequency of the occurrence and the duration of an explosive gas environment as follows:

Zone 0 (20)	**Zone 1** (21)	**Zone 2** (22)
An area in wich an explosive **gas** (dust) atmosphere is present CONTINUOUSLY or is present for LONG PERIODS (~1000 h/y).	An area in wich an explosive **gas** (dust) atmosphere is present LIKELY TO OCCUR in normal operation (~10 to 999 h/y).	An area in wich an explosive **gas** (dust) atmosphere is not LIKELY TO OCCUR and if it does occur it will exist for short period only (~1 to 10 h/y).
Mode of protection: **ia - ta ...**	Mode of protection: **db - mb - eb - tb...**	Mode of protection: **ec - tc...**

HAZARDOUS LOCATION CLASSIFICATION

Explosive Environment	Continuous Presence	Intermittent Presence (normal operation conditions)	Occasional Presence (abnormal operation)
IEC	**Zone 0** (gas) **Zone 20** (dust)	**Zone 1** (gas) **Zone 21** (dust)	**Zone 2** (gas) **Zone 22** (dust)
Europe	**Zone 0** (gas) **Zone 20** (dust)	**Zone 1** (gas) **Zone 21** (dust)	**Zone 2** (gas) **Zone 22** (dust)
Canada (CEC)[1] **USA** (NEC) [2]	**Cl. I Div. 1** (gas) **Cl. II Div. 1** (dust) **Cl.III Div. 1** (fibres)	**Cl. I Div. 1** (gas) **Cl. II Div. 1** (dust) **Cl.III Div. 1** (fibres)	**Cl. I Div. 2** (gas) **Cl. II Div. 2** (dust) **Cl.III Div. 2** (fibres)

[1] (CEC): Code Canadien d'Electricité / [2] (NEC): National Electrical Code

Example:

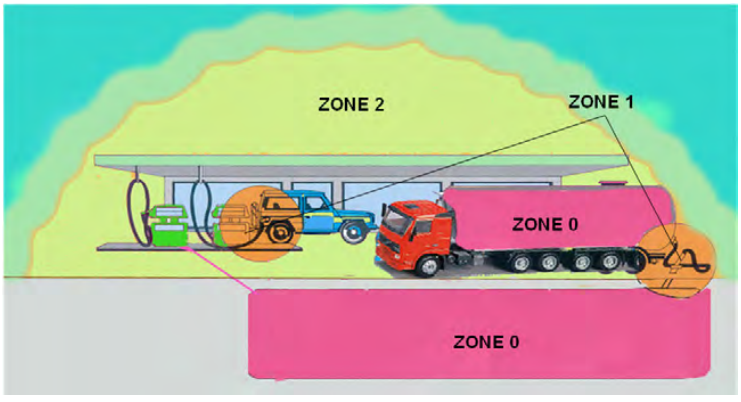

DEFINITIONS

HAZARDOUS LOCATION CLASSIFICATION

Category	Fault protection	Atmosphere	Zone	Example of protections
EC Type examination by Notified Body ⟶ annex III				
1 Very high level	2 types of protection or 2 indépendant faults	**G** (Gas)	**0**	"ia", "ta"...
		D (Dust)	**20**	
EC Type examination by Notified Body ⟶ annex III				
2 High level	One type of protection	**G** (Gas)	**1**	One type of protection
	Habitual frequent malfunction	**D** (Dust)	**21**	"db", "mb", "tb"...
Internal production inspection ⟶ EC declaration of conformity				
3 Normal	Required level of protection	**G** (Gas)	**2**	"ec", "tc"...
		D (Dust)	**22**	

Hazardous Location Classification

Group	Gas Reference
I	Methane
IIA	Propane
IIB	Ethylene
IIC	Hydrogen / Acethylene

Hazardous Location Classification

Group	Dust Reference
-	-
IIA	Fibres
IIB	Non-conductive dust
IIC	Conductive dust

Surface Temperature Classes

Class Temperature	Max. Temperature
T1	450°C
T2	300°C
T3	200°C
T4	135°C
T5	100°C
T6	85°C

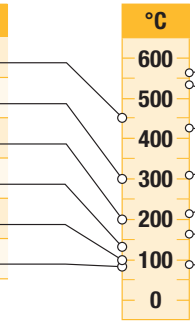

Gas & Ignition Temperature		
560°C	Hydrogen	T1
537°C	Methane	T1
425°C	Ethylene	T2
305°C	Acetylene	T2
210°C	Kerozene	T3
160°C	Ethylether	T4
95°C	Carbon disulphide	T6

EXPLOSIVE ENVIRONMENTS

PROTECTION MODES IN PARKER FCSE PRODUCTS

Concept	Code		Zones	
	Gas	Dust	Gas	Dust
Flameproof enclosure	**db**	**tb**	1/2	21/22
Encapstulation	**mb**	tb	0/1/2	20/21/22
Increased Safety	**eb**	**tb**	1/2	21/22
Intrinsic Safety	**ia**	ta	0/1/2	20/21/22
Concept Cat.3 apparatus	**nc**	tc	2	22
Mechanical Part	h	h	0/1/2	20/21/22

In red, protection modes used by Parker FCSE.

Tel: +45 63 12 83 00 | Email: ps@hymatik.com | www.hymatik.com | Hvidkaervej 27a, DK-5250 Odense SV, Denmark

ELECTRICAL EQUIPMENT FOR EXPLOSIVE GAS ATMOSPHERE EQUIPMENT GROUP II

EPL	Standards EN / IEC	Protection	Title
	60079-0	-	General requirements
Ga	60079-11	ia	Intrinsic safety
	-	-	-
	-	-	-
Gb	60079-1	db	Flameproof enclosures
	60079-7	eb	Increased safety
	60079-18	mb	Encapsulation
Gc	60079-7	ec	Increased safety
	60079-15	nc	Non sparking (C) or protected sparking (A)
	-	-	-

EPL = **E**quipement **P**rotection **L**evel
In red, protection modes used by Parker FCSE.

Tel: +45 63 12 83 00 | Email: ps@hymatik.com | www.hymatik.com | Hvidkaervej 27a, DK-5250 Odense SV, Denmark

ELECTRICAL EQUIPMENT FOR EXPLOSIVE DUST ATMOSPHERE - EQUIPMENT GROUP III

EPL	Standards EN / IEC	Protection	Title
	60079-0	-	General requirements
Da	60079-31	ta	Protection by enclosure
	60079-11	ia	Intrinsic safety
	-	-	-
Db	60079-31	tb	Protection by enclosure
	60079-18	mb	Protection by encapsulation
	-	-	-
Dc	60079-31	tc	Protection by enclosure
	-	-	-
	-	-	-

EPL = **E**quipement **P**rotection **L**evel

In red, protection modes used by Parker FCSE.

NON ELECTRICAL EQUIPMENT FOR USE IN POTENTIALLY EXPLOSIVE ATMOSPHERE

Standards	Protection	Title
ISO / EN ISO 80079-36	h	Basic method and requirement
ISO / EN ISO 80079-37	c, b, k	Constructional safety, control of ingition sources, liquid immersion

ZONES AND EQUIPEMENT PROTECTION LEVEL (EPL)

Gas		Dust	
Zone	EPL	Zone	EPL
0	Ga	20	Da
1	Ga and Gb	21	Da and Db
2	Ga, Gb and Gc	22	Da, Db and Dc

CATEGORIES AND EQUIPEMENT PROTECTION LEVEL (EPL)

Categories	Gas	Dust	Safety
1	Ga	Da	Very high
2	Gb	Db	High
3	Gc	Dc	Normal

EXAMPLES OF MARKING

ELECTRICAL APPARATUS FOR EXPLOSIVE GAS ATMOSPHERES EQUIPMENT GROUP II



Ex db IIC T5 Gb

Equipment Groups (Gas)	
IIA	Aceton, ethane, benzene, petrol, butane, propane, methane
IIB	Ethylene, town gas
IIC	Hydrogen, acetylene

Temperature Class	Ignition Temperature of Gas or Vapour	Maximum admissible surface temperature for permanently hot surfaces
T1	> 450°C	440°C
T2	> 300°C	290°C
T3	> 200°C	195°C
T4	> 135°C	130°C
T5	> 100°C	95°C
T6	> 85°C	80°C

Zone	Equipment Protection Level (EPL)
0	Ga
1	Gb and Ga
2	Gc, Gb and Ga

ELECTRICAL EQUIPMENT FOR USE IN AREAS WITH COMBUSTIBLE DUST - EQUIPMENT GROUP III





Ex tb IIIC T95°C Db

Equipment Groups (Dust)	
IIIA	Fibres
IIIB	Non-conductive dust
IIIC	Conductive dust

Zone	Equipment Protection Level (EPL)
20	Da
21	Db and Da
22	Dc, Db and Da

Tel: +45 63 12 83 00 | Email: ps@hymatik.com | www.hymatik.com | Hvidkaervej 27a, DK-5250 Odense SV, Denmark

EXPLOSIVE ENVIRONMENTS
WHAT ABOUT THE DIRECTIVE ?
(2014/34/EU - 19.04.16)

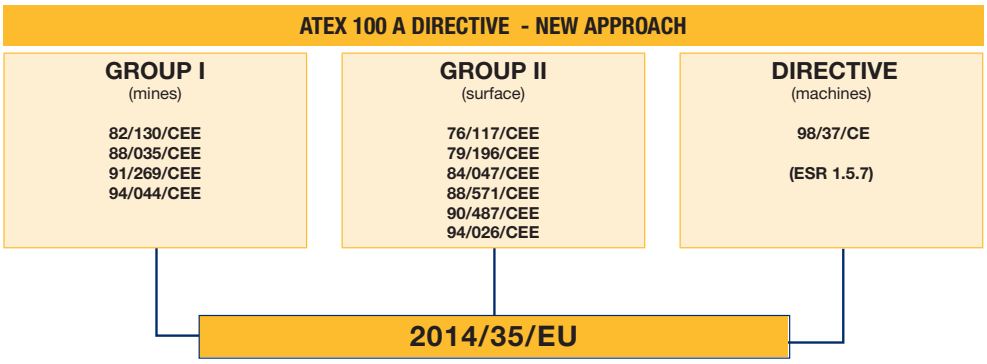

THE FRAMEWORK OF THE DIRECTIVE

The main principles of the new directive can be summarized as follows:

- It applies to **electric** and **non-electric** equipment.
- It defines **essential health and safety requirements**.
- It takes into consideration **all potential hazards** equipment may cause, in particular at design and production level.
- **The one directive** applies to both **mines** susceptible to fire damp and **surface industries**.
- It stresses the importance of equipment being **used in accordance with its intended purpose**.
- It recognises The European Standards Committee **CEN** and the European Committee for Electrotechnical Standardisation **CENELEC** as competent bodies to fix the required harmonised standards.
- It provides for the **contribution of labour and management**.
- It defines **procedures for assessing conformity** to essential requirements, on the basis of modules which qualify equipment to carry the **CE** mark of conformity.

APPLICATIONS

The directive applies to the industrial field and concerns the following equipment:

- **Equipment** (machines, apparatus, etc.)
- **Protective systems** (discharge devices, explosion suppression devices, etc.)
- **Components** (parts with no autonomous function, terminals, etc.)
- **Safety devices, controlling devices and regulating devices** intended for use outside potentially explosive environments but required for safety with respect to explosions (relays, barriers, pressure switches, thermostats, etc.)

Tel: +45 63 12 83 00 | Email: ps@hymatik.com | www.hymatik.com | Hvidkaervej 27a, DK-5250 Odense SV, Denmark

WHAT ABOUT THE DIRECTIVE ?
(2014/34/EU - 19.04.16)

EXCLUDED FROM THE SCOPE OF THE NEW DIRECTIVE

The following equipment falls outside the scope of the new directive:

- Medical devices intended for use in a medical environment.
- Equipment and protective systems relating only to the risk of explosion of unstable chemical substances (explosives, etc.)
- Equipment intended for use in domestic and non-commercial environments.
- Personal protective equipment covered by directive 89/686/EC.
- Seagoing vessels and mobile offshore units.
- Means of transport, except for vehicles intended for use in a potentially explosive environment.

POTENTIAL IGNITION SOURCES AND OTHER HAZARDS TO BE CONTROLLED

The following all represent potential hazards:

- Various sources of ignition, such as sparks, flames, electric arcs, high surface temperature, acoustic energy, optical radiation or electromagnetic waves.
- Static electricity.
- Pressure compensation operations.
- Disturbance from external sources, such as changing environmental conditions, extraneous voltage, humidity, vibration or contamination.

Provision is also made for specific requirements governing devices used to provide additional equipment safety.

These requirements necessitate detailed analysis to asses the operational reliability of such devices and their interaction with other components connected with the equipment.

Tel: +45 63 12 83 00 | Email: ps@hymatik.com | www.hymatik.com | Hvidkaervej 27a, DK-5250 Odense SV, Denmark

SIL CERTIFICATION

FUNCTIONAL SAFETY

During 70^{s} and 80^{s}, major incidents occurred in several chemical and pharmaceutical plants. This is why standard organizations in the US and in Europe established new safety standards, like IEC 61508 (formerly DIN 19251), IEC 61511, and ISA 84.

Risk is ranked as being negligible, tolerable, or unacceptable. The starting point for any modern safety system is to reduce risk in any process to an acceptable or tolerable level. In this context, functional safety can be defined as “free of unacceptable risk”.

The formula for risk is: RISK = HAZARD FREQUENCY x HAZARD CONSEQUENCE

ESD: EMERGENCY SHUTDOWN DEVICES

Risk can be reduced initially by a safe process design, by the Basic Process Control System (PBCS), and finally by a safety shutdown system.

Employees and operating plant must be protected from risks. On their own unique safety precautions may not provide total security. For this reason, safety exists in multiple protective levels: a series of mechanical devices, process controls, shutdown systems and external response measures which prevent or mitigate a hazardous event. If one safety protection level should fail, the other levels are designed to take control.

The level of protective layers required is evaluated using an analysis of a process’s hazards and risks known as a Process Hazards Analysis (PHA). If a study concludes that existing protection of the plant is inadequate, an Emergency Shut-down system (ESD) , also call Safety Instrumented System (SIS) will be required. The ESD operates independently from Basic Process Control System, and is only used in emergency situations. The task of the ESD is to bring the operating plant back to a safe state working condition when an unsafe operating condition has occurred.

The ESD is designed with a number of safety functions, including sensors, logic solvers and final elements. The final element level is the area where Parker FCDE can provide his expertise and offer solenoid valves, as part of the safety system.

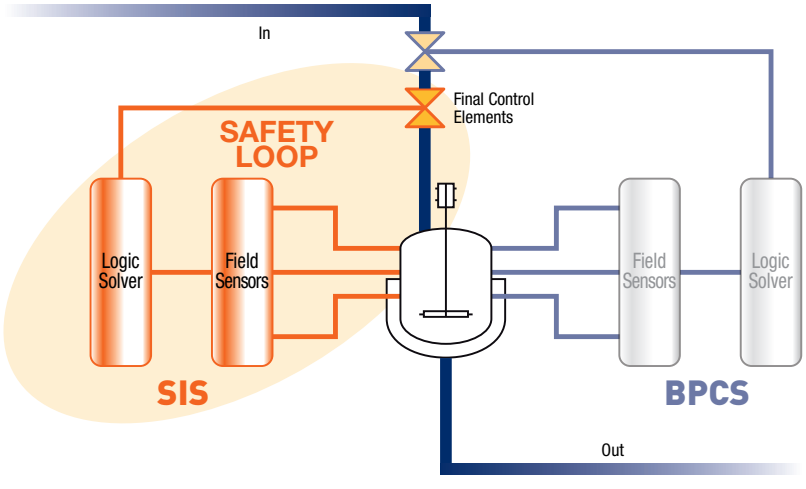

SIF and SIL

A Safety Instrumented Function (SIF) is a safety feature with a specified Safety Integrity Level (SIL) which is implemented by a SIS to achieve or maintain a safe state. SIF's sensor, logic solver, and final elements work together to detect a hazardous condition and bring the process to a safe condition.

The Process Hazards Analysis (PHA) will determine the required SIL level for each SIF.

The effectiveness of a SIS is described in terms of "the probability of the system to fail to perform its required function when requested". This is the Probability of Failure on Demand (PFD).



Example of SIL Declaration of Conformity

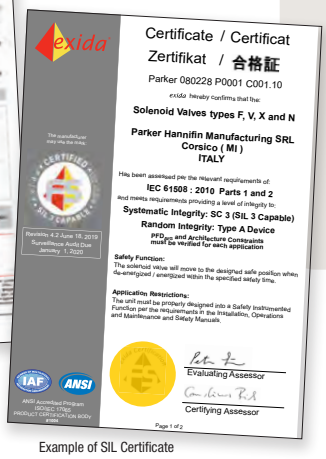

Example of SIL Certificate

SIL is linked to the PFD, and is a statistical representation of the SIS integrity when a process demand occurs.

Both ISA84 and IEC 61508 use SIL to measure the reliability of a SIS.

The higher the SIL, the more reliable or effective is the system.

Both ISA and IEC use 3 levels of SIL, SILs 1, 2 & 3. IEC also includes an additional level, SIL 4.

SIL Safe Integrity Level	Availability	PFDavg	Risk Reduction	Qualitative Consequence
4	>99.99%	10^{-5} to $<10^{-4}$	100.000 to 10.000	Potential for fatalities in the community
3	99.9% to 99.99%	10^{-4} to $<10^{-3}$	10.000 to 1.000	Potential for multiple on-site fatalities
2	99% to 99.9%	10^{-3} to $<10^{-2}$	1.000 to 100	Potential for major on-site injuries or a fatality
1	90% to 99%	10^{-2} to $<10^{-1}$	100 to 10	Potential for minor on-site injuries

A PFD of 10-4 (SIL3) means 0.0001 possible failures / year or 1 failure in 10.000 years is possible

DETERMINING SIL LEVEL FOR INSTRUMENTS

SIL levels for field instruments are evaluated using two methods:

FMEDA (Failures Modes, Effects and Diagnostic Analysis) usually certified by a third party. A systematic analysis is needed to determine failure rates, failure modes and the diagnostic capability as defined by IEC61508/651511.

Proven In Use is typically used for mature instruments used in a well-known process. This approach requires sufficient product operational hours, revision history, fault reporting systems and field failure data to determine if there is evidence of systematic design faults in a product. IEC 61508 provides levels of operational history required for each SIL.

Depending on the product, Parker is able to provide necessary documentation, including third part certificates, or manufacturer declaration of conformity.

Please consult our technical support for more information: tech.support.fcse@parker.com

HOW TO USE THIS CATALOGUE

This catalogue is a comprehensive list of our products. It will help to identify appropriate valves and coils and enable the user to generate ordering numbers.

This catalogue is split by product family. You will find a summary page at the beginning of each valve section. For ease of use, each valve section is divided by product series.

On the first page of each product series section, you will find an overview of the products within and their technical characteristics, to guide you to the relevant page (example below):

SECTION SUMMARY PAGE

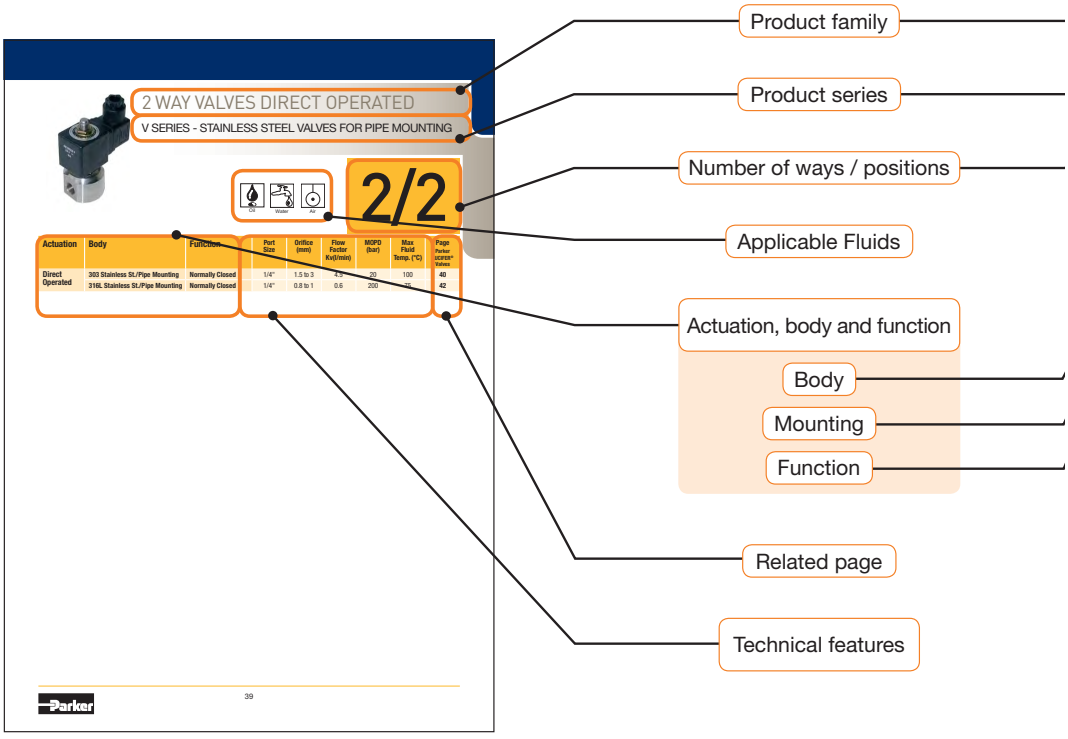

For further technical information regarding Actuation, Body and Function, please refer to the technical information section at the end of the catalogue.

Tel: +45 63 12 83 00 | Email: ps@hymatik.com | www.hymatik.com | Hvidkaervej 27a, DK-5250 Odense SV, Denmark

Ordering Information

ISO Symbol

Applicable **Approvals** within this page

Quick selection table with Min/Max values for all valves on the page

SECTION PRODUCT PAGE

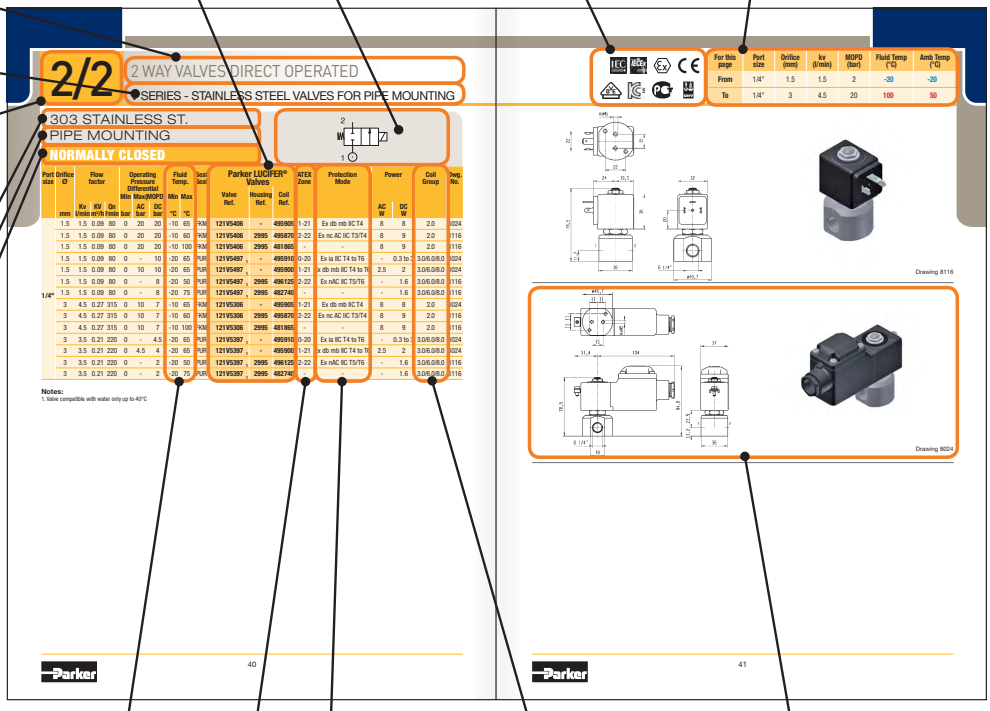

Fluid Temperature Min/Max permitted *

ATEX Protection Mode

ATEX Zone where the valve can be mounted

A choice of **Coil Groups** compatible with the selected valve

Dimensional 2D** and 3D drawings

* Fluid temperature may be subject to modification, please always check the ATEX certificate of the valve.
** 2D drawing shown always corresponds to the standard coil.

Tel: +45 63 12 83 00 | Email: ps@hymatik.com | www.hymatik.com | Hvidkaervej 27a, DK-5250 Odense SV, Denmark

HOW TO SELECT A VALVE

Once you are in the selected family 1 and product series 2.

The table is designed to help you navigate to the products matching your criteria.

First decide the actuation 3, then move accross the table selecting your body material 4, function 5 and technical requirements 6.

After you have found products fiting within your specification, please go to the corresponding page number in the final column 7, here you will find a selection of products that match your criteria.

1 SELECT PRODUCT FAMILY

2 SELECT PRODUCT SERIES

3 SELECT ACTUATION

4 SELECT BODY

5 SELECT FUNCTION

6 SELECT TECHNICAL DATA

7 SELECT CORRESPONDING PAGE

Tel: +45 63 12 83 00 | Email: ps@hymatik.com | www.hymatik.com | Hvidkaervej 27a, DK-5250 Odense SV, Denmark

1

2 WAY VALVES DIRECT OPERATED

V SERIES - STAINLESS STEEL VALVES FOR PIPE MOUNTING

2





2/2

Actuation	Body	Function	Port Size	Orifice (mm)	Flow Factor Kv(l/min)	MOPD (bar)	Max Fluid Temp. (°C)	Page Parker LUCIFER® Valves
Direct Operated	303 Stainless St./Pipe Mounting	Normally Closed	1/4"	1.5 to 3	4.5	20	100	40
	316L Stainless St./Pipe Mounting	Normally Closed	1/4"	0.8 to 1	0.6	200	75	42

3 4 5 6 7

39

Tel: +45 63 12 83 00 | Email: ps@hymatik.com | www.hymatik.com | Hvidkaervej 27a, DK-5250 Odense SV, Denmark

HOW TO ORDER PARKER SOLENOID VALVES

A PARKER SOLENOID VALVE IS COMPOSED OF 3 ELEMENTS:

The Valve (1) + Housing (2) + Coil (3)

1. Choose the valve reference
2. Choose the housing
3. Choose the coil

(1) Choose the Valve Reference

Valve Ref.
121V5406
121V5406
121V5406

(2) Select the housing depending on the protection level (IP 44 to IP 67 found in the coil section)

Housing Ref.
-
2995
2995

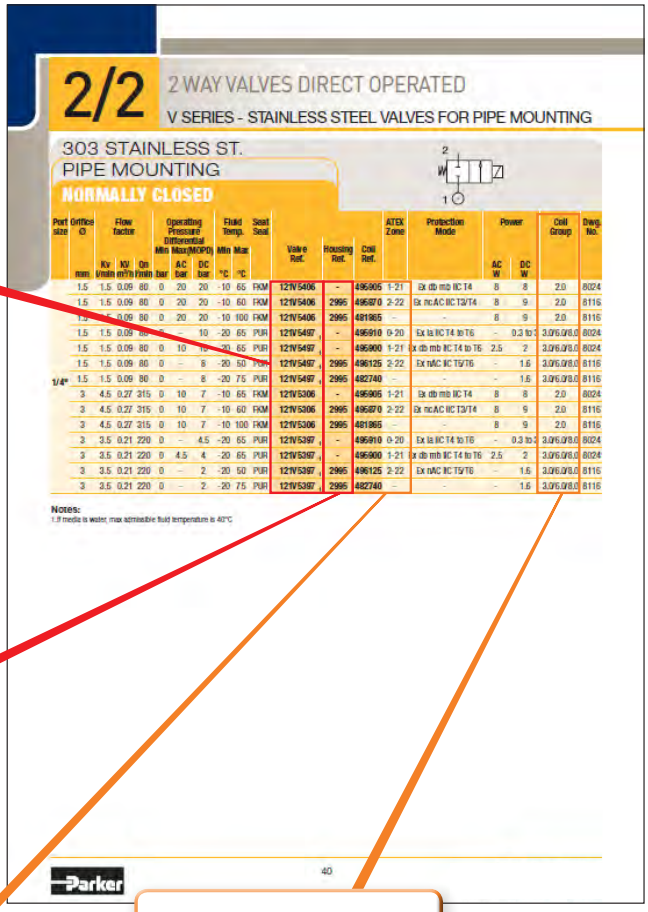

2/2 2 WAY VALVES DIRECT OPERATED

V SERIES - STAINLESS STEEL VALVES FOR PIPE MOUNTING

303 STAINLESS ST. PIPE MOUNTING

NORMALLY CLOSED

Port size	Orifice Ø	Flow factor Kv l/min	Flow factor KV m³/h	Flow factor Qn l/min	Operating Pressure Differential Min bar	Operating Pressure Differential Max(MOPD) AC bar	Operating Pressure Differential Max(MOPD) DC bar	Fluid Temp. Min °C	Fluid Temp. Max °C	Seat Seal	Valve Ref.	Housing Ref.	Coil Ref.	ATEX Zone	Protection Mode	Power AC W	Power DC W	Coil Group	Dwg. No.
	mm																		
	1.5	1.5	0.09	80	0	20	20	-10	65	FKM	121V5406	-	495905	1-21	Ex db mb IIC T4	8	8	2.0	8024
	1.5	1.5	0.09	80	0	20	20	-10	60	FKM	121V5406	2995	495870	2-22	Ex nc,nC IIC T3/T4	8	9	2.0	8116
	1.5	1.5	0.09	80	0	20	20	-10	100	FKM	121V5406	2995	481865	-	-	8	9	2.0	8116
	1.5	1.5	0.09	80	0	-	10	-20	65	PUR	121V5497	-	495910	0-20	Ex ia IIC T4 to T6	-	0.3 to 3	3.0/6.0/8.0	8024
	1.5	1.5	0.09	80	0	10	10	-20	65	PUR	121V5497	-	495900	1-21	Ex db mb IIC T4 to T6	2.5	2	3.0/6.0/8.0	8024
	1.5	1.5	0.09	80	0	-	8	-20	50	PUR	121V5497	2995	496125	2-22	Ex nAC IIC T5/T6	-	1.6	3.0/6.0/8.0	8116
1/4"	1.5	1.5	0.09	80	0	-	8	-20	75	PUR	121V5497	2995	482740	-	-	-	1.6	3.0/6.0/8.0	8116
	3	4.5	0.27	315	0	10	7	-10	65	FKM	121V5306	-	495905	1-21	Ex db mb IIC T4	8	8	2.0	8024
	3	4.5	0.27	315	0	10	7	-10	60	FKM	121V5306	2995	495870	2-22	Ex nc,nC IIC T3/T4	8	9	2.0	8116
	3	4.5	0.27	315	0	10	7	-10	100	FKM	121V5306	2995	481865	-	-	8	9	2.0	8116
	3	3.5	0.21	220	0	-	4.5	-20	65	PUR	121V5397	-	495910	0-20	Ex ia IIC T4 to T6	-	0.3 to 2	3.0/6.0/8.0	8024
	3	3.5	0.21	220	0	4.5	4	-20	65	PUR	121V5397	-	495900	1-21	Ex db mb IIC T4 to T6	2.5	2	3.0/6.0/8.0	8024
	3	3.5	0.21	220	0	-	2	-20	50	PUR	121V5397	2995	496125	2-22	Ex nAC IIC T5/T6	-	1.6	3.0/6.0/8.0	8116
	3	3.5	0.21	220	0	-	2	-20	75	PUR	121V5397	2995	482740	-	-	-	1.6	3.0/6.0/8.0	8116

Notes:
1. If media is water, max admissible fluid temperature is 40°C

Parker 40

For a given valve, several coil types are being suggested.

For a wider choice, the selected valve is also compatible with every other coil from the same coil group.

Parker coils are available in many different voltages.
Choose the one you need by putting the voltage code at the end of your ordering number.

3 Choose the coil and voltage code

Coil Ref.

495870

VAC/Hz	Code
24/50	A2
48/50	A4
110/50	A5

Voltage Code

Valve and coil order example:

1 - 2 - 3

121V5406 - 2995 - 495870A2

Valve Reference | Housing | Coil and Voltage Code

EXPLOSION PROOF ELECTRICAL PARTS

COIL GROUP **2.0/2.1** ELECTRICAL PARTS "nc AC"

ZONE 2/22

ELECTRICAL PART 32 mm

These coils can be mounted with every Parker ATEX solenoid valves corresponding to the specified Coil Group.
See column "Coil Group" within valve pages.

Application: Control of solenoid valves in dangerous areas where explosion-proof protection Ex nc AC IIC T3 to T4 is required.
Ease of mounting in confined space - offers shock and corrosion protection-simplifies conversion of existing equipment to other requirements, etc.

Benefits:
The synthetic material encapsulation of the coil provides an effective compact housing, offering full protection against dust, oil, water, etc.
Small size for ease of mounting in confined spaces.



Reference		495870	496110
Certificate		LCIE 05 ATEX 6003 X	
Coil Group		2.0 / 2.1	
Type of protection	Gas	II 3 G - Ex nc AC IIC T3 / T4	II 3 G - Ex nc AC IIC T3 / T4
	Dust	II 3 D - Ex tc IIIC - T195°C / T130°C	II 3 D - Ex tc IIIC - T195°C / T130°C
Degree of protection		IP65 (with plug) according to IEC/EN 60529 Standards	
Insulation Class		F (155°C)	
Duty cycle		100%	
Ambiant temperature		-40°C to +65°C / 50°C The application is limited also by the temperature range of the valve.	
Elect. Power DC	Pn (hot)	9 W	-
	P (cold) 20°C	12 W	-
Elect. Power AC	Pn (holding)	8 W	9 W
	Attraction cold	26 VA (9 W)	32 VA (10 W)
Weight		150 g	

Voltages "Un"	VAC/Hz	Code	VDC	Code	VAC/Hz	Code
-10% to +10% of the Un	24/50	A2	24	C2	24/50-60	P0
	48/50	A4	48	C4	48/50-60	S4
	110/50	A5	110	C5	110/50-60	S5
	220-230/50	30			220/50-60	S6

To Order a Coil choose Coil Ref + Voltage Code, example: **495870 for 24VDC = 495870C2**

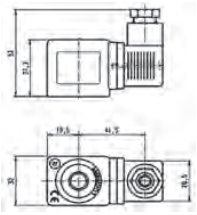

Parker

308

Important:

Valve, Housing and Coil must be ordered separately separately. In case of demand for full assemblies please consult PH Connect or your local Sales contact.

Tel: +45 63 12 83 00 | Email: ps@hymatik.com | www.hymatik.com | Hvidkaervej 27a, DK-5250 Odense SV, Denmark

HOW TO USE COIL GROUPS

WITHIN A VALVE PAGE

One of Parker's strengths is the modularity, adaptability and flexibility of our products.
When you select a solenoid valve, the coils displayed in the table have been chosen as they will fulfill the majority of application requirements.

Valve Ref.	Housing Ref.	Coil Ref.
121V5406	-	495905
121V5406	2995	495870
121V5406	2995	481865

However, in some specific cases, you will need special features that will lead you to choose another coil.

Groups have been created in order to facilitate the selection of a compatible coil with the chosen valve.

Coil Group
2.0
2.0
2.0

Example:
The valve 121V5406 is proposed with the coil 495870 but you can also choose any coil from the group 2.0.

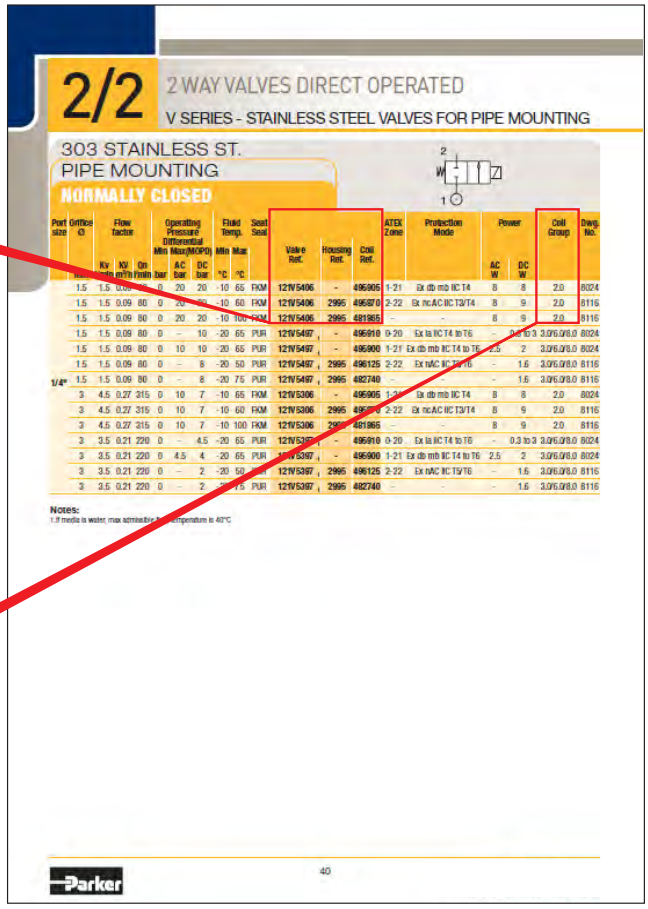
2/2
2 WAY VALVES DIRECT OPERATED
V SERIES - STAINLESS STEEL VALVES FOR PIPE MOUNTING
303 STAINLESS ST.
PIPE MOUNTING
NORMALLY CLOSED
Parker
40

It is also possible to choose the coil first and then select the valve using coil groups.

HOW TO USE COIL GROUPS

WITHIN A COIL PAGE

The coil section is at the end of the catalogue and displays the specifications of each coil, along with the reference number, class of insulation, ambient temperature, electrical power and weight.

2.0 / 2.1

As indicated before, the valve 121V5406 is proposed with coil 495870 but is also compatible with the 2.0 coil group. This means the coil 481865 is also compatible with the chosen valve as it is within this group.

When refering to the coil section you will find the coil group for each coil. This allows you to discover which other coils are compatible with the valve you have chosen.

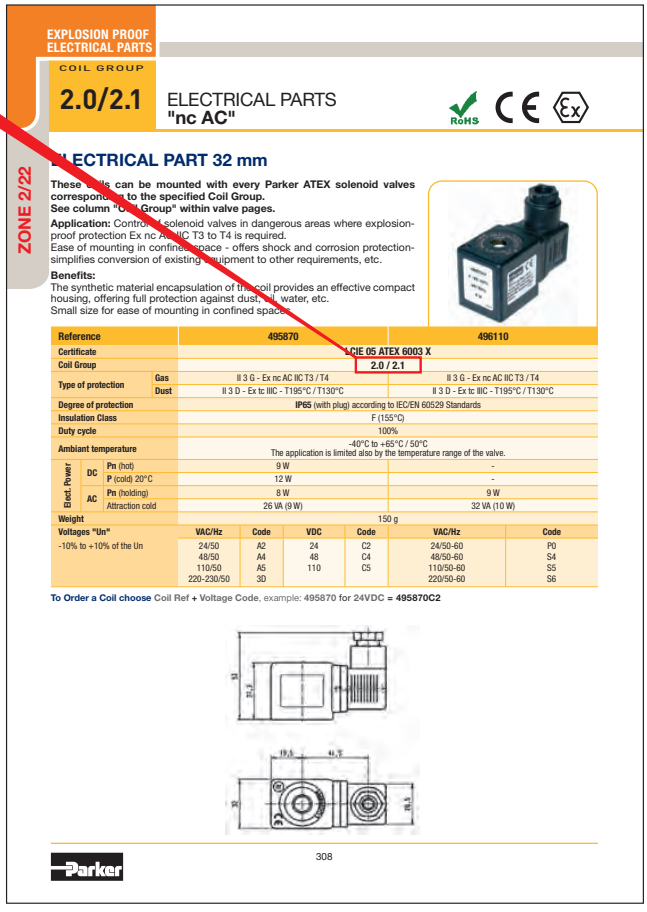

EXPLOSION PROOF ELECTRICAL PARTS

ZONE 2/22

COIL GROUP **2.0/2.1** ELECTRICAL PARTS "nc AC"

RoHS CE Ex

ELECTRICAL PART 32 mm

These coils can be mounted with every Parker ATEX solenoid valves corresponding to the specified Coil Group.
See column "Coil Group" within valve pages.

Application: Control of solenoid valves in dangerous areas where explosion-proof protection Ex nc AC IIC T3 to T4 is required.
Ease of mounting in confined space - offers shock and corrosion protection- simplifies conversion of existing equipment to other requirements, etc.

Benefits:
The synthetic material encapsulation of the coil provides an effective compact housing, offering full protection against dust, oil, water, etc.
Small size for ease of mounting in confined spaces.

Reference			495870		496110
Certificate			CIE 05 ATEX 6003 X		
Coil Group			2.0 / 2.1		
Type of protection		Gas	II 3 G - Ex nc AC IIC T3 / T4		II 3 G - Ex nc AC IIC T3 / T4
		Dust	II 3 D - Ex tc IIIC - T195°C / T130°C		II 3 D - Ex tc IIIC - T195°C / T130°C
Degree of protection			IP65 (with plug) according to IEC/EN 60529 Standards		
Insulation Class			F (155°C)		
Duty cycle			100%		
Ambiant temperature			-40°C to +65°C / 50°C The application is limited also by the temperature range of the valve.		
Elect. Power	DC	Pn (hot)	9 W		-
		P (cold) 20°C	12 W		-
	AC	Pn (holding)	8 W		9 W
		Attraction cold	26 VA (9 W)		32 VA (10 W)
Weight			150 g		

Voltages "Un"	VAC/Hz	Code	VDC	Code	VAC/Hz	Code
-10% to +10% of the Un	24/50	A2	24	C2	24/50-60	P0
	48/50	A4	48	C4	48/50-60	S4
	110/50	A5	110	C5	110/50-60	S5
	220-230/50	3D			220/50-60	S6

To Order a Coil choose Coil Ref + Voltage Code, example: **495870 for 24VDC = 495870C2**

Parker

308

Tel: +45 63 12 83 00 | Email: ps@hymatik.com | www.hymatik.com | Hvidkaervej 27a, DK-5250 Odense SV, Denmark

Tel: +45 63 12 83 00 | Email: ps@hymatik.com | www.hymatik.com | Hvidkaervej 27a, DK-5250 Odense SV, Denmark



2 WAY VALVES DIRECT OPERATED

K SERIES - BRASS VALVES FOR PIPE MOUNTING



2/2

Actuation	Body	Function	Port Size	Orifice (mm)	Flow Factor Kv(l/min)	MOPD (bar)	Max Fluid Temp. (°C)	Page
Direct Operated	**Brass/Pipe Mounting**	**Normally Closed**	1/4"	1 to 3	4.5	60	100	**36**

Parker Hannifin Corporation
Fluid Control Division Europe
Process Catalogue FCDE/1121/UK/V1.0

2/2 2 WAY VALVES DIRECT OPERATED

K SERIES - BRASS VALVES FOR PIPE MOUNTING

BRASS
PIPE MOUNTING
NORMALLY CLOSED

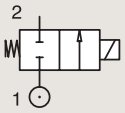

Port size	Orifice Ø	Flow factor			Operating Pressure Differential Max(MOPD)			Fluid Temp.		Seat Seal	Valve Ref.	Housing Ref.	Coil Ref.	ATEX Zone	Protection Mode	Power		Coil Group	Dwg. No.
					Min			Min	Max										
BSP	mm	Kv l/min	KV m³/h	Qn l/min	bar	AC bar	DC bar	°C	°C							AC W	DC W		
	1	0.6	0.04	36	0	-	10	-10	55	FKM	U121K0490	2995	483580.01	0-20	Ex ia IIC T6	-	0.5 to 3	6.0/7.0/8.0	7059
	1	0.6	0.04	36	0	-	10	-10	55	FKM	U121K0490	-	495910	0-20	Ex ia IIC T4 to T6	-	0.3 to 3	6.0/7.0/8.0	7059
1/4" NPT	1	0.6	0.04	36	0	10	10	-10	55	FKM	U121K0490	-	495900	1-21	Ex db mb IIC T4 to T6	2.5	2	6.0/7.0/8.0	7059
	1.5	0.6	0.04	36	0	-	10	-10	55	FKM	U121K0690	2995	483580.01	0-20	Ex ia IIC T6	-	0.5 to 3	6.0/7.0/8.0	7059
	1.5	0.6	0.04	36	0	-	10	-10	55	FKM	U121K0690	-	495910	0-20	Ex ia IIC T4 to T6	-	0.3 to 3	6.0/7.0/8.0	7059
	1.5	0.6	0.04	36	0	10	10	-10	55	FKM	U121K0690	-	495900	1-21	Ex db mb IIC T4 to T6	2.5	2	6.0/7.0/8.0	7059
	1.5	1.5	0.09	80	0	60	25	-30	65	PCTFE	E121K04	-	495905	1-21	Ex db mb IIC T4	8	8	2.0	8274
	1.5	1.5	0.09	80	0	60	25	-30	60	PCTFE	E121K04	2995	495870	2-22	Ex nc AC IIC T3/T4	8	9	2.0	3510
	1.5	1.5	0.09	80	0	60	25	-30	75	PCTFE	E121K04	2995	481865	-	-	8	9	2.0	3510
	1.5	1.5	0.09	80	0	20	20	-10	65	FKM	E121K0402	-	495905	1-21	Ex db mb IIC T4	8	8	2.0/3.0	8274
	1.5	1.5	0.09	80	0	20	20	-10	60	FKM	E121K0402	2995	495870	2-22	Ex nc AC IIC T3/T4	8	9	2.0/3.0	3510
	1.5	1.5	0.09	80	0	20	20	-10	100	FKM	E121K0402	2995	481865	-	-	8	9	2.0/3.0	3510
	1.5	1.5	0.09	80	0	-	10	-20	65	PUR	121K0497 [1]	-	495910	0-20	Ex ia IIC T4 to T6	-	0.3 to 3	6.0/8.0	8274
	1.5	1.5	0.09	80	0	10	10	-20	65	PUR	121K0497 [1]	-	495900	1-21	Ex db mb IIC T4 to T6	2.5	2	6.0/8.0	8274
	1.5	1.5	0.09	80	0	-	8	-20	50	PUR	121K0497 [1]	2995	496125	2-22	Ex nAC IIC T5/T6	-	1.6	6.0/8.0	3510
1/4"	1.5	1.5	0.09	80	0	-	8	-20	75	PUR	121K0497 [1]	2995	482740	-	-	-	1.6	6.0/8.0	3510
	3	4.5	0.27	320	0	20	7	-30	65	PCTFE	E121K03	-	495905	1-21	Ex db mb IIC T4	8	8	2.0/3.0	8274
	3	4.5	0.27	320	0	20	7	-30	60	PCTFE	E121K03	2995	495870	2-22	Ex nc AC IIC T3/T4	8	9	2.0/3.0	3510
	3	4.5	0.27	320	0	20	7	-30	75	PCTFE	E121K03	2995	481865	-	-	8	9	2.0/3.0	3510
	3	4.5	0.27	320	0	10	7	-10	65	FKM	E121K0302	-	495905	1-21	Ex db mb IIC T4	8	8	2.0	8274
	3	4.5	0.27	320	0	10	7	-10	60	FKM	E121K0302	2995	495870	2-22	Ex nc AC IIC T3/T4	8	9	2.0	3510
	3	4.5	0.27	320	0	10	7	-10	100	FKM	E121K0302	2995	481865	-	-	8	9	2.0	3510
	3	3.5	0.21	250	0	-	4.5	-20	65	PUR	121K0397 [1]	-	495910	0-20	Ex ia IIC T4 to T6	-	0.3 to 3	6.0/8.0	8274
	3	3.5	0.21	250	0	4.5	4	-20	65	PUR	121K0397 [1]	-	495900	1-21	Ex db mb IIC T4 to T6	2.5	2	6.0/8.0	8274
	3	3.5	0.21	250	0	-	2	-20	50	PUR	121K0397 [1]	2995	496125	2-22	Ex nAC IIC T5/T6	-	1.6	6.0/8.0	3510
	3	3.5	0.21	250	0	-	2	-20	75	PUR	121K0397 [1]	2995	482740	-	-	-	1.6	6.0/8.0	3510

Notes:
1. If media is water, max admissible fluid temperature is 40°C

Tel: +45 63 12 83 00 | Email: ps@hymatik.com | www.hymatik.com | Hvidkaervej 27a, DK-5250 Odense SV, Denmark

IECEx certified

For this page	Port size	Orifice (mm)	kv (l/min)	MOPD (bar)	Fluid Temp (°C)	Amb Temp (°C)
From	1/4"	1	0.6	2	-30	-20
To	1/4"	3	4.5	60	100	50

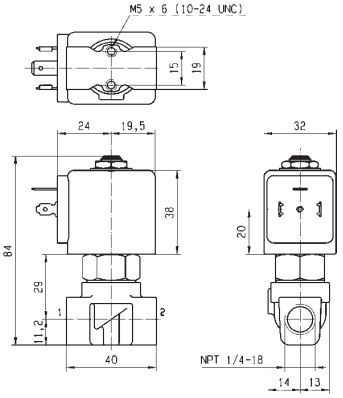



Drawing 7059

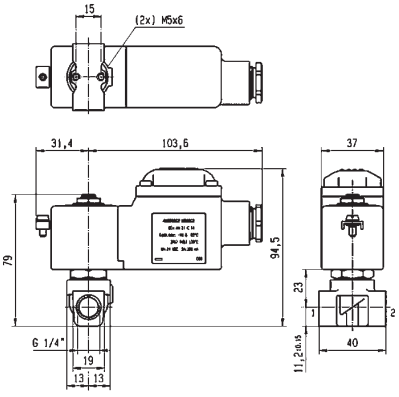



Drawing 8274

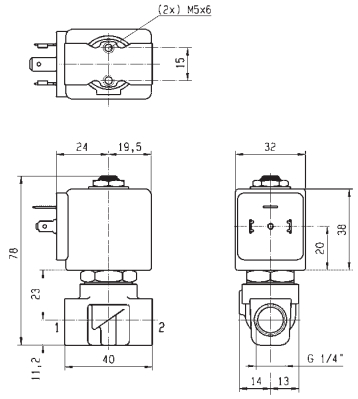



Drawing 3510

Parker Hannifin Corporation
Fluid Control Division Europe
Process Catalogue FCDE/1121/UK/V1.0

Tel: +45 63 12 83 00 | Email: ps@hymatik.com | www.hymatik.com | Hvidkaervej 27a, DK-5250 Odense SV, Denmark



2 WAY VALVES DIRECT OPERATED

V SERIES - STAINLESS STEEL VALVES FOR PIPE MOUNTING



2/2

Actuation	Body	Function	Port Size	Orifice (mm)	Flow Factor Kv(l/min)	MOPD (bar)	Max Fluid Temp. (°C)	Page
Direct Operated	303 Stainless St./Pipe Mounting	Normally Closed	1/4"	1.5 to 3	4.5	20	100	40
	316L Stainless St./Pipe Mounting	Normally Closed	1/4"	0.8 to 1	0.6	200	75	42

Tel: +45 63 12 83 00 | Email: ps@hymatik.com | www.hymatik.com | Hvidkaervej 27a, DK-5250 Odense SV, Denmark

2/2 2 WAY VALVES DIRECT OPERATED

V SERIES - STAINLESS STEEL VALVES FOR PIPE MOUNTING

303 STAINLESS ST.
PIPE MOUNTING

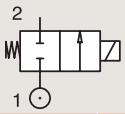

NORMALLY CLOSED

Port size	Orifice Ø	Flow factor			Operating Pressure Differential			Fluid Temp.		Seat Seal	Valve Ref.	Housing Ref.	Coil Ref.	ATEX Zone	Protection Mode	Power		Coil Group	Dwg. No.
					Min			Min	Max										
	mm	Kv l/min	KV m³/h	Qn l/min	bar	AC bar	DC bar	°C	°C							AC W	DC W		
1/4"	1.5	1.5	0.09	80	0	20	20	-10	65	FKM	**121V5406**	**-**	**495905**	1-21	Ex db mb IIC T4	8	8	2.0	8024
	1.5	1.5	0.09	80	0	20	20	-10	60	FKM	**121V5406**	**2995**	**495870**	2-22	Ex nc AC IIC T3/T4	8	9	2.0	8116
	1.5	1.5	0.09	80	0	20	20	-10	100	FKM	**121V5406**	**2995**	**481865**	-	-	8	9	2.0	8116
	1.5	1.5	0.09	80	0	-	10	-20	65	PUR	**121V5497** [1]	**-**	**495910**	0-20	Ex ia IIC T4 to T6	-	0.3 to 3	3.0/6.0/8.0	8024
	1.5	1.5	0.09	80	0	10	10	-20	65	PUR	**121V5497** [1]	**-**	**495900**	1-21	Ex db mb IIC T4 to T6	2.5	2	3.0/6.0/8.0	8024
	1.5	1.5	0.09	80	0	-	8	-20	50	PUR	**121V5497** [1]	**2995**	**496125**	2-22	Ex nAC IIC T5/T6	-	1.6	3.0/6.0/8.0	8116
	1.5	1.5	0.09	80	0	-	8	-20	75	PUR	**121V5497** [1]	**2995**	**482740**	-	-	-	1.6	3.0/6.0/8.0	8116
	3	4.5	0.27	315	0	10	7	-10	65	FKM	**121V5306**	**-**	**495905**	1-21	Ex db mb IIC T4	8	8	2.0	8024
	3	4.5	0.27	315	0	10	7	-10	60	FKM	**121V5306**	**2995**	**495870**	2-22	Ex nc AC IIC T3/T4	8	9	2.0	8116
	3	4.5	0.27	315	0	10	7	-10	100	FKM	**121V5306**	**2995**	**481865**	-	-	8	9	2.0	8116
	3	3.5	0.21	220	0	-	4.5	-20	65	PUR	**121V5397** [1]	**-**	**495910**	0-20	Ex ia IIC T4 to T6	-	0.3 to 3	3.0/6.0/8.0	8024
	3	3.5	0.21	220	0	4.5	4	-20	65	PUR	**121V5397** [1]	**-**	**495900**	1-21	Ex db mb IIC T4 to T6	2.5	2	3.0/6.0/8.0	8024
	3	3.5	0.21	220	0	-	2	-20	50	PUR	**121V5397** [1]	**2995**	**496125**	2-22	Ex nAC IIC T5/T6	-	1.6	3.0/6.0/8.0	8116
	3	3.5	0.21	220	0	-	2	-20	75	PUR	**121V5397** [1]	**2995**	**482740**	-	-	-	1.6	3.0/6.0/8.0	8116

Notes:
1.If media is water, max admissible fluid temperature is 40°C

For this page	Port size	Orifice (mm)	kv (l/min)	MOPD (bar)	Fluid Temp (°C)	Amb Temp (°C)
From	1/4"	1.5	1.5	2	-20	-20
To	1/4"	3	4.5	20	100	50

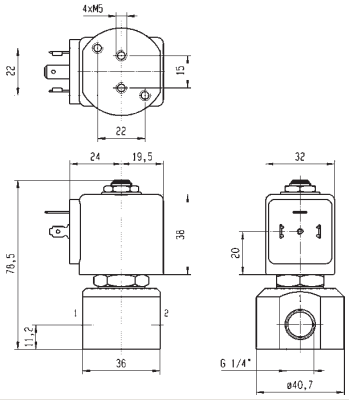



Drawing 8116

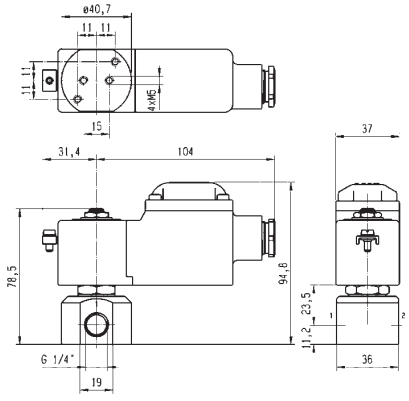



Drawing 8024

2/2 2 WAY VALVES DIRECT OPERATED

V SERIES - STAINLESS STEEL VALVES FOR PIPE MOUNTING

316L STAINLESS ST. PIPE MOUNTING

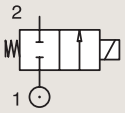

NORMALLY CLOSED

Port size	Orifice Ø	Flow factor			Operating Pressure Differential Min	Max(MOPD)		Fluid Temp. Min	Max	Seat Seal	Valve Ref.	Housing Ref.	Coil Ref.	ATEX Zone	Protection Mode	Power		Coil Group	Dwg. No.
	mm	Kv l/min	KV m³/h	Qn l'min	bar	AC bar	DC bar	°C	°C							AC W	DC W		
1/4" NPT	0.8	-	-	20	0	-	200	-25	65	PUR	U121VS3750A [1]	-	496565	0-20	Ex ia IIB/IIC T4 to T6	-	0.3	9.0/10.1/10.2	8165
	0.8	-	-	20	0	-	200	-25	75	PUR	U121VS3750A [1]	-	492210	1-21	Ex eb mb IIC T5 to T6	-	1 to 1.8	9.0/10.1/10.2	6713
	0.8	-	-	20	0	200	200	-25	75	PUR	U121VS3750A [1]	-	492310	1-21	Ex mb II T4 to T5	6	6	9.0/10.1/10.2	6713
	0.8	-	-	20	0	200	200	-25	65	PUR	U121VS3750A [1]	-	496560	1-21	Ex db mb IIC T4	8	8	9.0/10.1/10.2	8165
	0.8	-	-	20	0	200	200	-25	65	PUR	U121VS3750A [1]	-	496800	1-21	Ex db mb IIC T4	8	8	9.0/10.1/10.2	8165
	1	0.6	0.04	40	0	-	98	-40	75	PUR	U121V5595 [2,3]	-	496565	0-20	Ex ia IIB/IIC T4 to T6	-	0.3	9.0/10.1/10.2	8165
	1	0.6	0.04	40	0	-	98	-40	75	PUR	U121V5595 [2,3]	-	492210	1-21	Ex eb mb IIC T5 to T6	-	1 to 1.8	9.0/10.1/10.2	6713
	1	0.6	0.04	40	0	98	98	-40	65	PUR	U121V5595 [2,3]	-	496800	1-21	Ex db mb IIC T4	8	8	9.0/10.1/10.2	8165
	1	0.6	0.04	40	0	98	98	-40	75	PUR	U121V5595 [2,3]	-	492310	1-21	Ex mb II T4 to T5	6	6	9.0/10.1/10.2	6713
	1	0.6	0.04	40	0	98	98	-40	65	PUR	U121V5595 [2,3]	-	496560	1-21	Ex db mb IIC T4	8	8	9.0/10.1/10.2	8165
	1	0.6	0.04	40	0	98	98	-40	50	PUR	U121V5595 [2,3]	-	496895	-	-	8	8	9.0/10.1/10.2	8165
	1	0.6	0.04	40	0	-	98	-40	65	PUR	U121V7595 [3]	-	496565	0-20	Ex ia IIB/IIC T4 to T6	-	0.3	9.0/10.1/10.2/10.3	8165
	1	0.6	0.04	40	0	98	98	-40	65	PUR	U121V7595 [3]	-	496800	1-21	Ex db mb IIC T4	8	8	9.0/10.1/10.2/10.3	8165
	1	0.6	0.04	40	0	98	98	-40	65	PUR	U121V7595 [3]	-	497105	1-21	Ex db IIC T4 to T6	8	8	9.0/10.1/10.2/10.3	8299
	1	0.6	0.04	40	0	98	98	-40	50	PUR	U121V7595 [3]	-	496895	-	-	8	8	9.0/10.1/10.2/10.3	8165

Notes:
1. Valve only compatible with neutral gases
2. Valve delivered with an individual material traceability certificate (3.1 following EN10204)
3. If media is water, max admissible fluid temperature is 40°C

Tel: +45 63 12 83 00 | Email: ps@hymatik.com | www.hymatik.com | Hvidkaervej 27a, DK-5250 Odense SV, Denmark

For this page	Port size	Orifice (mm)	kv (l/min)	MOPD (bar)	Fluid Temp (°C)	Amb Temp (°C)
From	1/4"	0.8	-	98	-40	-40
To	1/4"	1	0.6	200	75	75

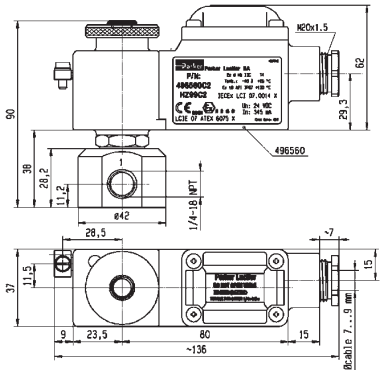



Drawing 8165

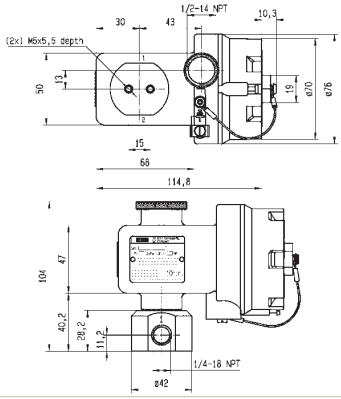



Drawing 8299

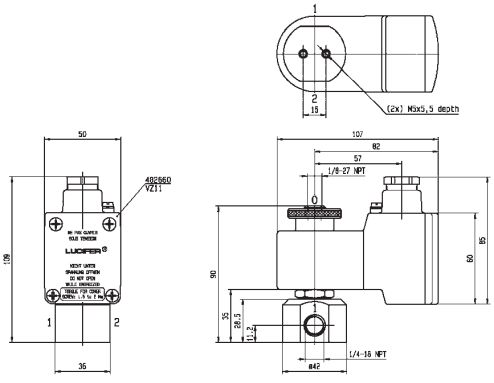



Drawing 6713

Tel: +45 63 12 83 00 | Email: ps@hymatik.com | www.hymatik.com | Hvidkaervej 27a, DK-5250 Odense SV, Denmark



3 WAY VALVES DIRECT OPERATED

K SERIES - BRASS VALVES FOR PIPE MOUNTING

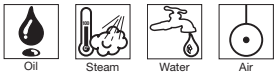

3/2

Actuation	Body	Function	Port Size	Orifice (mm)	Flow Factor Kv(l/min)	MOPD (bar)	Max Fluid Temp. (°C)	Page
Direct Operated	Brass/Pipe Mounting	Normally Closed	1/8"	1.5 to 2.5	3.5	15	100	46
			1/4"	1 to 2.5	3.5	30	140	48
		Normally Open	1/4"	1.5 to 2.5	2.2	16	100	54
		Universal	1/8"	1.5 to 2.5	3.5	10	100	56
			1/4"	0.8 to 2.5	3.5	30	100	58
		Control by Electric Impulse	1/4"	1.5 to 2.5	3.5	16	100	60

Tel: +45 63 12 83 00 | Email: ps@hymatik.com | www.hymatik.com | Hvidkaervej 27a, DK-5250 Odense SV, Denmark

3/2 3 WAY VALVES DIRECT OPERATED

K SERIES - BRASS VALVES FOR PIPE MOUNTING

BRASS
PIPE MOUNTING
NORMALLY CLOSED

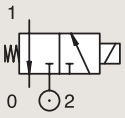

Port size	Orifice Ø	Flow factor			Operating Pressure Differential Min	Max(MOPD)		Fluid Temp. Min	Max	Seat Seal	Valve Ref.	Housing Ref.	Coil Ref.	ATEX Zone	Protection Mode	Power		Coil Group	Dwg. No.
BSP	mm	Kv l/min	KV m³/h	Qn l/min	bar	AC bar	DC bar	°C	°C							AC W	DC W		
	1.5	1.5	0.09	80	0	15	15	-10	65	FKM	**E131K14**	**-**	**495905**	1-21	Ex db mb IIC T4	8	8	2.1	8019
	1.5	1.5	0.09	80	0	15	15	-10	60	FKM	**E131K14**	**2995**	**495870**	2-22	Ex nc AC IIC T3/T4	8	9	2.1	3510
	1.5	1.5	0.09	80	0	15	15	-10	100	FKM	**E131K14**	**2995**	**481865**	-	-	8	9	2.1	3510
	2	2.5	0.15	140	0	10	10	-10	65	FKM	**131K16**	**-**	**495905**	1-21	Ex db mb IIC T4	8	8	2.1	8019
	2	2.5	0.15	140	0	10	10	-10	60	FKM	**131K16**	**2995**	**495870**	2-22	Ex nc AC IIC T3/T4	8	9	2.1	3510
1/8"	2	2.5	0.15	140	0	10	10	-10	100	FKM	**131K16**	**2995**	**481865**	-	-	8	9	2.1	3510
	2	2.5	0.15	140	0	10	10	-10	65	FKM	**131K1650** [1]	**-**	**495905**	1-21	Ex db mb IIC T4	8	8	2.1	8019
	2	2.5	0.15	140	0	10	10	-10	60	FKM	**131K1650** [1]	**2995**	**495870**	2-22	Ex nc AC IIC T3/T4	8	9	2.1	3510
	2	2.5	0.15	140	0	10	10	-10	100	FKM	**131K1650** [1]	**2995**	**481865**	-	-	8	9	2.1	3510
	2.5	3.5	0.21	220	0	7	7	-10	65	FKM	**E131K13**	**-**	**495905**	1-21	Ex db mb IIC T4	8	8	2.1	8019
	2.5	3.5	0.21	220	0	7	7	-10	60	FKM	**E131K13**	**2995**	**495870**	2-22	Ex nc AC IIC T3/T4	8	9	2.1	3510
	2.5	3.5	0.21	220	0	7	7	-10	100	FKM	**E131K13**	**2995**	**481865**	-	-	8	9	2.1	3510

Notes:
1. With manual override

Tel: +45 63 12 83 00 | Email: ps@hymatik.com | www.hymatik.com | Hvidkaervej 27a, DK-5250 Odense SV, Denmark

For this page	Port size	Orifice (mm)	kv (l/min)	MOPD (bar)	Fluid Temp (°C)	Amb Temp (°C)
From	1/8"	1.5	1.5	7	-10	-10
To	1/8"	2.5	3.5	15	100	50

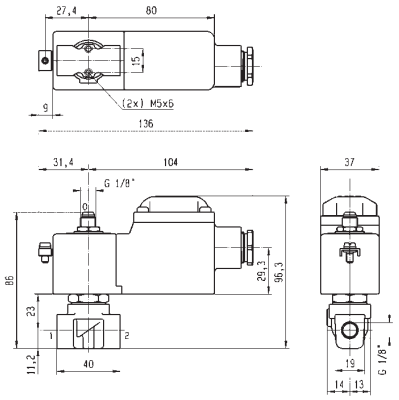



Drawing 8019

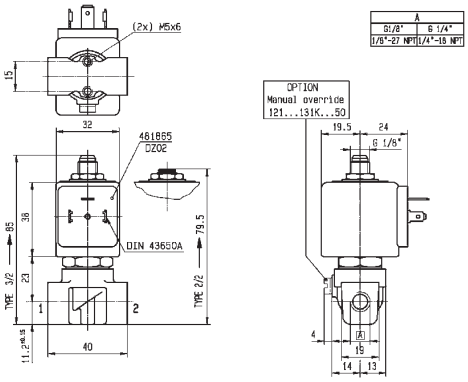



Drawing 3510

Parker Hannifin Corporation
Fluid Control Solutions Europe
Process Catalogue FCSE/1121/UK/V1.0

3/2 3 WAY VALVES DIRECT OPERATED

K SERIES - BRASS VALVES FOR PIPE MOUNTING

BRASS
PIPE MOUNTING
NORMALLY CLOSED

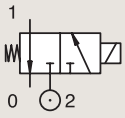

Port size	Orifice Ø	Flow factor			Operating Pressure Differential			Fluid Temp.		Seat Seal	Valve Ref.	Housing Ref.	Coil Ref.	ATEX Zone	Protection Mode	Power		Coil Group	Dwg. No.
					Min			Min	Max										
BSP	mm	Kv l/min	KV m³/h	Qn l/min	bar	AC bar	DC bar	°C	°C							AC W	DC W		
1/4"	1	0.6	0.04	36	0	-	10	-10	55	FKM	**131K0490**	**2995**		0-20	Ex ia IIC T6	-	0.5 to 3	6.0/7.0/8.0	7058
	1	0.6	0.04	36	0	-	10	-10	65	FKM	**131K0490**	**-**	**495910**	0-20	Ex ia IIC T4 to T6	-	0.3 to 3	6.0/7.0/8.0	7058
	1	0.6	0.04	36	0	10	10	-10	65	FKM	**131K0490**	**-**	**495900**	1-21	Ex db mb IIC T4 to T6	2.5	2	6.0/7.0/8.0	7058
	1.2	0.8	0.05	50	0	30	30	-30	65	Ruby	**E131K64** [3]	**-**	**495905**	1-21	Ex db mb IIC T4	8	8	2.0	8023
	1.2	0.8	0.05	50	0	30	30	-30	60	Ruby	**E131K64** [3]	**2995**	**495870**	2-22	Ex nc AC IIC T3/T4	8	9	2.0	8119
	1.2	0.8	0.05	50	0	30	30	-30	140	Ruby	**E131K64** [3]	**2995**	**481865**	-	-	8	9	2.0	8119
	1.2	0.8	0.05	50	0	30	30	-30	65	Ruby	**E131K6450** [13]	**-**	**495905**	1-21	Ex db mb IIC T4	8	8	2.1	8023
	1.2	0.8	0.05	50	0	30	30	-30	60	Ruby	**E131K6450** [13]	**2995**	**495870**	2-22	Ex nc AC IIC T3/T4	8	9	2.1	8119
	1.2	0.8	0.05	50	0	30	30	-30	140	Ruby	**E131K6450** [13]	**2995**	**481865**	-	-	8	9	2.1	8119
	1.5	1.5	0.09	80	0	-	7	-20	65	PUR	**131K0497** [2]	**-**	**495910**	0-20	Ex ia IIC T4 to T6	-	0.3 to 3	6.0/8.0	8023
	1.5	1.5	0.09	80	0	7	7	-20	65	PUR	**131K0497** [2]	**-**	**495900**	1-21	Ex db mb IIC T4 to T6	2.5	2	6.0/8.0	8023
	1.5	1.5	0.09	80	0	-	7	-20	50	PUR	**131K0497** [2]	**2995**	**496125**	2-22	Ex nAC IIC T5/T6	-	1.6	6.0/8.0	8023
	1.5	1.5	0.09	80	0	-	7	-20	75	PUR	**131K0497** [2]	**2995**	**482740**	-	-	-	1.6	6.0/8.0	8023
	1.5	1.5	0.09	80	0	16	16	-10	65	FKM	**E131K04**	**-**	**495905**	1-21	Ex db mb IIC T4	8	8	2.0	8023
	1.5	1.5	0.09	80	0	16	16	-10	60	FKM	**E131K04**	**2995**	**495870**	2-22	Ex nc AC IIC T3/T4	8	9	2.0	8119
	1.5	1.5	0.09	80	0	16	16	-10	100	FKM	**E131K04**	**2995**	**481865**	-	-	8	9	2.0	8119
	1.5	1.5	0.09	80	0	15	15	-10	65	FKM	**E131K0450** [1]	**-**	**495905**	1-21	Ex db mb IIC T4	8	8	2.1	8023
	1.5	1.5	0.09	80	0	15	15	-10	60	FKM	**E131K0450** [1]	**2995**	**495870**	2-22	Ex nc AC IIC T3/T4	8	9	2.1	8119
	1.5	1.5	0.09	80	0	15	15	-10	100	FKM	**E131K0450** [1]	**2995**	**481865**	-	-	8	9	2.1	8119

Notes:
1. With manual override
2. If media is water, max admissible fluid temperature is 40°C
3. Valve not recommended for use with gases

For this page	Port size	Orifice (mm)	kv (l/min)	MOPD (bar)	Fluid Temp (°C)	Amb Temp (°C)
From	1/4"	1	0.6	7	-30	-20
To	1/4"	1.5	1.5	30	140	50

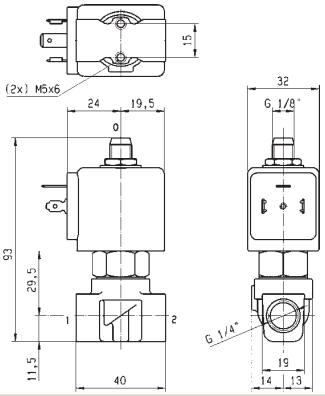



Drawing 7058

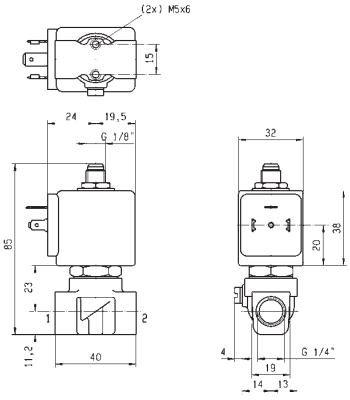



Drawing 8119

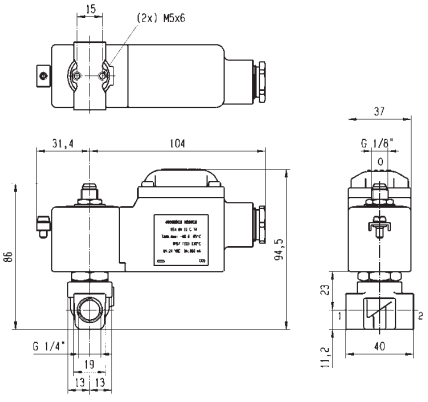



Drawing 8023

Parker Hannifin Corporation
Fluid Control Solutions Europe
Process Catalogue FCSE/1121/UK/V1.0

3/2

3 WAY VALVES DIRECT OPERATED

K SERIES - BRASS VALVES FOR PIPE MOUNTING

BRASS
PIPE MOUNTING
NORMALLY CLOSED

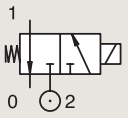

Port size	Orifice Ø	Flow factor			Operating Pressure Differential Min	Max(MOPD)		Fluid Temp. Min	Max	Seat Seal	Valve Ref.	Housing Ref.	Coil Ref.	ATEX Zone	Protection Mode	Power		Coil Group	Dwg. No.
BSP	mm	Kv l/min	KV m^3/h	Qn l/min	bar	AC bar	DC bar	°C	°C							AC W	DC W		
	2	2.5	0.15	140	0	10	10	-10	65	FKM	**E131K06**	-	**495905**	1-21	Ex db mb IIC T4	8	8	2.0	8023
1/4"	2	2.5	0.15	140	0	10	10	-10	60	FKM	**E131K06**	**2995**	**495870**	2-22	Ex nc AC IIC T3/T4	8	9	2.0	8119
	2	2.5	0.15	140	0	10	10	-10	100	FKM	**E131K06**	**2995**	**481865**	-	-	8	9	2.0	8119

Tel: +45 63 12 83 00 | Email: ps@hymatik.com | www.hymatik.com | Hvidkaervej 27a, DK-5250 Odense SV, Denmark

For this page	Port size	Orifice (mm)	kv (l/min)	MOPD (bar)	Fluid Temp (°C)	Amb Temp (°C)
From	1/4"	1.8	2	10	-40	-10
To	1/4"	2	2.5	10	100	50

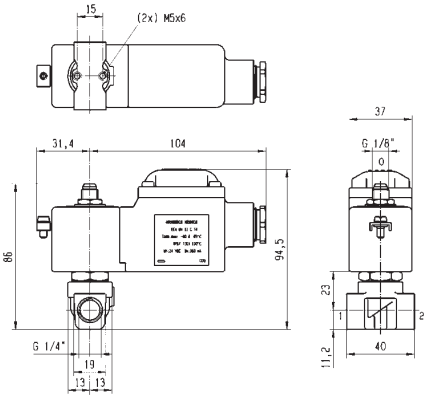



Drawing 8023

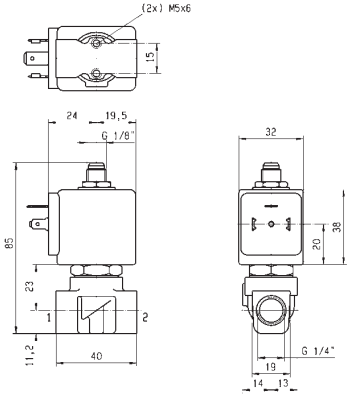



Drawing 8119

Parker Hannifin Corporation
Fluid Control Solutions Europe
Process Catalogue FCSE/1121/UK/V1.0

3/2

3 WAY VALVES DIRECT OPERATED

K SERIES - BRASS VALVES FOR PIPE MOUNTING

BRASS
PIPE MOUNTING
NORMALLY CLOSED

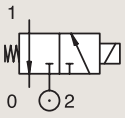

Port size	Orifice Ø	Flow factor			Operating Pressure Differential Max(MOPD)			Fluid Temp.		Seat Seal	Valve Ref.	Housing Ref.	Coil Ref.	ATEX Zone	Protection Mode	Power		Coil Group	Dwg. No.
					Min			Min	Max										
BSP	mm	Kv l/min	KV m³/h	Qn l/min	bar	AC bar	DC bar	°C	°C							AC W	DC W		
	2	2.5	0.15	140	0	10	10	-10	65	FKM	E131K0650 [1]	-	495905	1-21	Ex db mb IIC T4	8	8	2.1	3510
	2	2.5	0.15	140	0	10	10	-10	60	FKM	E131K0650 [1]	2995	495870	2-22	Ex nc AC IIC T3/T4	8	9	2.1	3510
	2	2.5	0.15	140	0	10	10	-10	100	FKM	E131K0650 [1]	2995	481865	-	-	8	9	2.1	3510
	2.5	3	0.18	180	0	-	2	-20	65	PUR	131K0397 [2]	-	495910	0-20	Ex ia IIC T4 to T6	-	0.3 to 3	6.0/8.0	8023
	2.5	3	0.18	180	0	2	2	-20	65	PUR	131K0397 [2]	-	495900	1-21	Ex db mb IIC T4 to T6	2.5	2	6.0/8.0	8023
	2.5	3	0.18	180	0	-	2	-20	50	PUR	131K0397 [2]	2995	496125	2-22	Ex nAC IIC T5/T6	-	1.6	6.0/8.0	8023
	2.5	3	0.18	180	0	-	2	-20	75	PUR	131K0397 [2]	2995	482740	-	-	-	1.6	6.0/8.0	8023
	2.5	2.7	0.16	220	0.1	7	7	-10	65	FKM	E131E03 [3]	-	495905	1-21	Ex db mb IIC T4	8	8	2.0	3525
	2.5	2.7	0.16	220	0.1	7	7	-10	60	FKM	E131E03 [3]	2995	495870	2-22	Ex nc AC IIC T3/T4	8	9	2.0	3525
	2.5	2.7	0.16	220	0.1	7	7	-10	75	FKM	E131E03 [3]	2995	481865	-	-	8	9	2.0	3525
	2.5	3.5	0.21	220	0	7	7	-10	65	FKM	E131K03	-	495905	1-21	Ex db mb IIC T4	8	8	2.0	8023
	2.5	3.5	0.21	220	0	7	7	-10	60	FKM	E131K03	2995	495870	2-22	Ex nc AC IIC T3/T4	8	9	2.0	3510
	2.5	3.5	0.21	220	0	7	7	-10	100	FKM	E131K03	2995	481865	-	-	8	9	2.0	3510
1/4"	2.5	3.5	0.21	220	0	7	7	-40	65	PUR	E131K0308 [2]	-	495905	1-21	Ex db mb IIC T4	8	8	2.1	8023
	2.5	3.5	0.21	220	0	7	7	-40	60	PUR	E131K0308 [2]	2995	495870	2-22	Ex nc AC IIC T3/T4	8	9	2.1	3510
	2.5	3.5	0.21	220	0	7	7	-40	75	PUR	E131K0308 [2]	2995	481865	-	-	8	9	2.1	3510
	2.5	3.5	0.21	220	0	7	7	-10	65	FKM	E131K0350 [12]	-	495905	1-21	Ex db mb IIC T4	8	8	2.1	8023
	2.5	3.5	0.21	220	0	7	7	-10	60	FKM	E131K0350 [1]	2995	495870	2-22	Ex nc AC IIC T3/T4	8	9	2.1	3510
	2.5	3.5	0.21	220	0	7	7	-10	100	FKM	E131K0350 [1]	2995	481865	-	-	8	9	2.1	3510
	2.5	3.5	0.21	220	0	7	7	-40	65	PUR	E131K0358 [12]	-	495905	1-21	Ex db mb IIC T4	8	8	2.1	8023
	2.5	3.5	0.21	220	0	7	7	-40	60	PUR	E131K0358 [12]	2995	495870	2-22	Ex nc AC IIC T3/T4	8	9	2.1	3510
	2.5	3.5	0.21	220	0	7	7	-40	75	PUR	E131K0358 [12]	2995	481865	-	-	8	9	2.1	3510
	2.5	3.5	0.21	220	0	7	7	-30	65	Ruby	E131K63	-	495905	1-21	Ex db mb IIC T4	8	8	2.0	8023
	2.5	3.5	0.21	220	0	7	7	-30	60	Ruby	E131K63	2995	495870	2-22	Ex nc AC IIC T3/T4	8	9	2.0	3510
	2.5	3.5	0.21	220	0	7	7	-30	100	Ruby	E131K63	2995	481865	-	-	8	9	2.0	3510
	2.5	3.5	0.21	220	0	7	7	-30	65	Ruby	E131K6350 [1]	-	495905	1-21	Ex db mb IIC T4	8	8	2.1	8023
	2.5	3.5	0.21	220	0	7	7	-30	60	Ruby	E131K6350 [1]	2995	495870	2-22	Ex nc AC IIC T3/T4	8	9	2.1	3510
	2.5	3.5	0.21	220	0	7	7	-30	100	Ruby	E131K6350 [1]	2995	481865	-	-	8	9	2.1	3510

Notes:
1. With manual override
2. If media is water, max admissible fluid temperature is 40°C
3. Quick exhaust valve

Tel: +45 63 12 83 00 | Email: ps@hymatik.com | www.hymatik.com | Hvidkaervej 27a, DK-5250 Odense SV, Denmark

For this page	Port size	Orifice (mm)	kv (l/min)	MOPD (bar)	Fluid Temp (°C)	Amb Temp (°C)
From	1/4"	2	2.5	7	-40	-40
To	1/4"	2.5	3.5	10	100	50

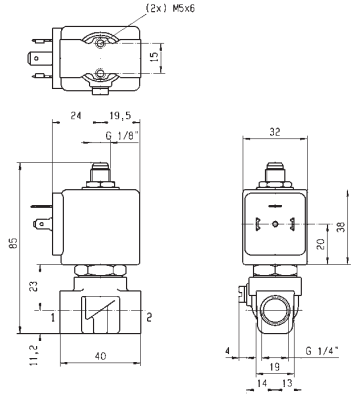



Drawing 3510

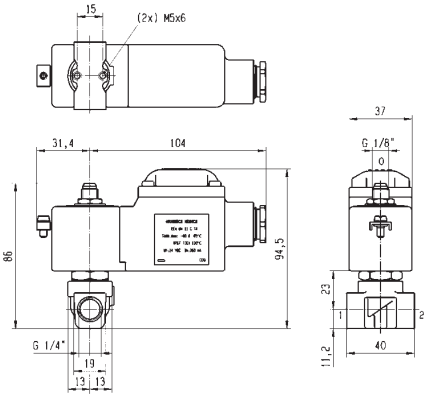



Drawing 8023

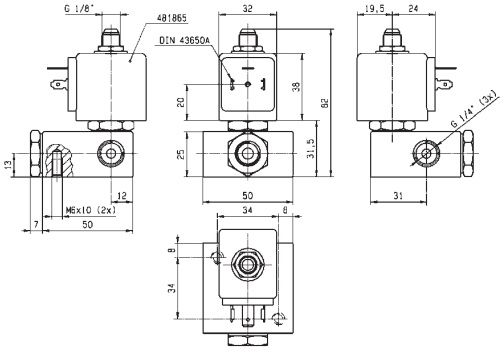



Drawing 3525

Parker Hannifin Corporation
Fluid Control Solutions Europe
Process Catalogue FCSE/1121/UK/V1.0

3/2 3 WAY VALVES DIRECT OPERATED

K SERIES - BRASS VALVES FOR PIPE MOUNTING

BRASS
PIPE MOUNTING
NORMALLY OPEN

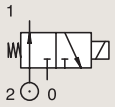

Port size	Orifice Ø	Flow factor			Operating Pressure Differential			Fluid Temp.		Seat Seal	Valve Ref.	Housing Ref.	Coil Ref.	ATEX Zone	Protection Mode	Power		Coil Group	Dwg. No.
					Min			Min	Max										
BSP	mm	Kv l/min	KV m³/h	Qn l/min	bar	AC bar	DC bar	°C	°C							AC W	DC W		
1/4"	1.5	1.4	0.08	80	0	16	16	-10	65	FKM	**132K04**	-	**495905**	1-21	Ex db mb IIC T4	8	8	2.1	8023
	1.5	1.4	0.08	80	0	16	16	-10	60	FKM	**132K04**	**2995**	**495870**	2-22	Ex nc AC IIC T3/T4	8	9	2.1	3510
	1.5	1.4	0.08	80	0	16	16	-10	100	FKM	**132K04**	**2995**	**481865**	-	-	8	9	2.1	3510
	2	1.8	0.11	125	0	10	10	-10	65	FKM	**132K06**	-	**495905**	1-21	Ex db mb IIC T4	8	8	2.1	8023
	2	1.8	0.11	125	0	10	10	-10	60	FKM	**132K06**	**2995**	**495870**	2-22	Ex nc AC IIC T3/T4	8	9	2.1	3510
	2	1.8	0.11	125	0	10	10	-10	100	FKM	**132K06**	**2995**	**481865**	-	-	8	9	2.1	3510
	2.5	2.2	0.13	160	0	7	7	-10	65	FKM	**132K03**	-	**495905**	1-21	Ex db mb IIC T4	8	8	2.1	8023
	2.5	2.2	0.13	160	0	7	7	-10	60	FKM	**132K03**	**2995**	**495870**	2-22	Ex nc AC IIC T3/T4	8	9	2.1	3510
	2.5	2.2	0.13	160	0	7	7	-10	100	FKM	**132K03**	**2995**	**481865**	-	-	8	9	2.1	3510

For this page	Port size	Orifice (mm)	kv (l/min)	MOPD (bar)	Fluid Temp (°C)	Amb Temp (°C)
From	1/4"	1.5	1.4	7	-10	-10
To	1/4"	2.5	2.2	16	100	50

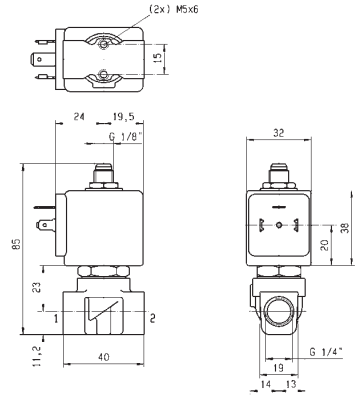



Drawing 3510

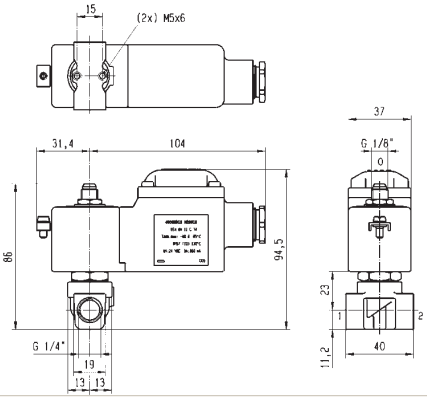



Drawing 8023

Parker Hannifin Corporation
Fluid Control Solutions Europe
Process Catalogue FCSE/1121/UK/V1.0

3/2 3 WAY VALVES DIRECT OPERATED

K SERIES - BRASS VALVES FOR PIPE MOUNTING

BRASS
PIPE MOUNTING
UNIVERSAL

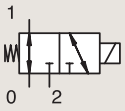

Port size	Orifice Ø	Flow factor			Operating Pressure Differential Min	Max(MOPD)		Fluid Temp. Min	Max	Seat Seal	Valve Ref.	Housing Ref.	Coil Ref.	ATEX Zone	Protection Mode	Power		Coil Group	Dwg. No.
BSP	mm	Kv l/min	KV m³/h	Qn l/min	bar	AC bar	DC bar	°C	°C							AC W	DC W		
	1.5	1.5	0.09	80	0	10	10	-10	65	FKM	**E133K14**	**-**	**495905**	1-21	Ex db mb IIC T4	8	8	2.1	8023
	1.5	1.5	0.09	80	0	10	10	-10	60	FKM	**E133K14**	**2995**	**495870**	2-22	Ex nc AC IIC T3/T4	8	9	2.1	3510
	1.5	1.5	0.09	80	0	10	10	-10	100	FKM	**E133K14**	**2995**	**481865**	-	-	8	9	2.1	3510
	2	2.5	0.15	145	0	7	7	-10	65	FKM	**E133K16**	**-**	**495905**	1-21	Ex db mb IIC T4	8	8	2.1	8023
1/8"	2	2.5	0.15	145	0	7	7	-10	60	FKM	**E133K16**	**2995**	**495870**	2-22	Ex nc AC IIC T3/T4	8	9	2.1	3510
	2	2.5	0.15	145	0	7	7	-10	100	FKM	**E133K16**	**2995**	**481865**	-	-	8	9	2.1	3510
	2.5	3.5	0.21	220	0	4	4	-10	65	FKM	**E133K13**	**-**	**495905**	1-21	Ex db mb IIC T4	8	8	2.1	8023
	2.5	3.5	0.21	220	0	4	4	-10	60	FKM	**E133K13**	**2995**	**495870**	2-22	Ex nc AC IIC T3/T4	8	9	2.1	3510
	2.5	3.5	0.21	220	0	4	4	-10	100	FKM	**E133K13**	**2995**	**481865**	-	-	8	9	2.1	3510

Tel: +45 63 12 83 00 | Email: ps@hymatik.com | www.hymatik.com | Hvidkaervej 27a, DK-5250 Odense SV, Denmark

IECEx certified

For this page	Port size	Orifice (mm)	kv (l/min)	MOPD (bar)	Fluid Temp (°C)	Amb Temp (°C)
From	1/8"	1.5	1.5	4	-10	-10
To	1/8"	2.5	3.5	10	100	50

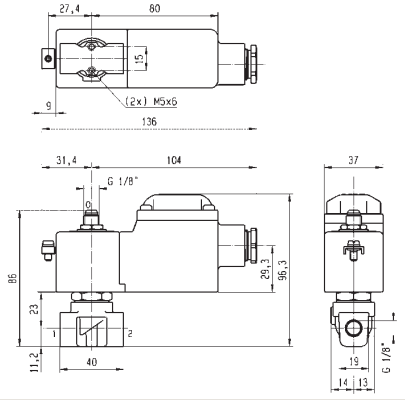



Drawing 8023

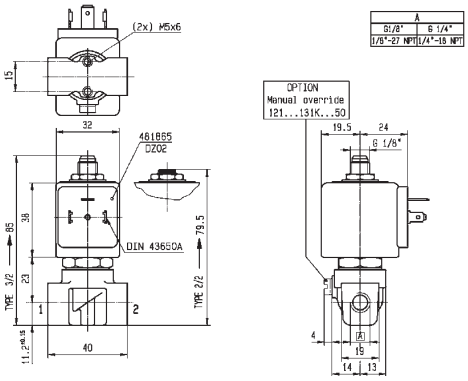



Drawing 3510

3/2 3 WAY VALVES DIRECT OPERATED

K SERIES - BRASS VALVES FOR PIPE MOUNTING

BRASS
PIPE MOUNTING
UNIVERSAL

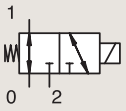

Port size	Orifice Ø	Flow factor			Operating Pressure Differential Max(MOPD)			Fluid Temp.		Seat Seal	Valve Ref.	Housing Ref.	Coil Ref.		Protection Mode	Power		Coil Group	Dwg. No.
					Min			Min	Max										
BSP	mm	Kv l/min	KV m³/h	Qn l/min	bar	AC bar	DC bar	°C	°C							AC W	DC W		
	0.8	0.3	0.02	23	0	30	30	-10	60	FKM	E133K05	-	495905	1-21	Ex db mb IIC T4	8	8	2.0	8023
	0.8	0.3	0.02	23	0	30	30	-10	60	FKM	E133K05	2995	495870	2-22	Ex nc AC IIC T3/T4	8	9	2.0	3510
	0.8	0.3	0.02	23	0	30	30	-10	100	FKM	E133K05	2995	481865	-	-	8	9	2.0	3510
	1.5	1.5	0.09	80	0	-	3	-20	65	PUR	133K0497 [2]	-	495910	0-20	Ex ia IIC T4 to T6	-	0.3 to 3	6.0/8.0	8023
	1.5	1.5	0.09	80	0	3	3	-20	65	PUR	133K0497 [2]	-	495900	1-21	Ex db mb IIC T4 to T6	2.5	2	6.0/8.0	8023
	1.5	1.5	0.09	80	0	-	3	-20	50	PUR	133K0497 [2]	2995	496125	2-22	Ex nAC IIC T5/T6	-	1.6	6.0/8.0	3510
	1.5	1.5	0.09	80	0	-	3	-20	75	PUR	133K0497 [2]	2995	482740	-	-	-	1.6	6.0/8.0	3510
	1.5	1.5	0.09	80	0	10	10	-10	65	FKM	E133K04	-	495905	1-21	Ex db mb IIC T4	8	8	2.0	8023
	1.5	1.5	0.09	80	0	10	10	-10	60	FKM	E133K04	2995	495870	2-22	Ex nc AC IIC T3/T4	8	9	2.0	3510
	1.5	1.5	0.09	80	0	10	10	-10	100	FKM	E133K04	2995	481865	-	-	8	9	2.0	3510
	1.5	1.5	0.09	80	0	10	10	-10	65	FKM	E133K0450 [1]	-	495905	1-21	Ex db mb IIC T4	8	8	2.1	8023
	1.5	1.5	0.09	80	0	10	10	-10	60	FKM	E133K0450 [1]	2995	495870	2-22	Ex nc AC IIC T3/T4	8	9	2.1	3510
1/4"	1.5	1.5	0.09	80	0	10	10	-10	100	FKM	E133K0450 [1]	2995	481865	-	-	8	9	2.1	3510
	2	2.5	0.15	145	0	7	7	-10	65	FKM	E133K06	-	495905	1-21	Ex db mb IIC T4	8	8	2.0/3.0	8023
	2	2.5	0.15	145	0	7	7	-10	60	FKM	E133K06	2995	495870	2-22	Ex nc AC IIC T3/T4	8	9	2.0/3.0	3510
	2	2.5	0.15	145	0	7	7	-10	100	FKM	E133K06	2995	481865	-	-	8	9	2.0/3.0	3510
	2	2.5	0.15	145	0	7	7	-10	65	FKM	E133K0650 [1]	-	495905	1-21	Ex db mb IIC T4	8	8	2.1	8023
	2	2.5	0.15	145	0	7	7	-10	60	FKM	E133K0650 [1]	2995	495870	2-22	Ex nc AC IIC T3/T4	8	9	2.1	3510
	2	2.5	0.15	145	0	7	7	-10	100	FKM	E133K0650 [1]	2995	481865	-	-	8	9	2.1	3510
	2.5	3.5	0.21	220	0	4	4	-10	65	FKM	E133K03	-	495905	1-21	Ex db mb IIC T4	8	8	2.0	8023
	2.5	3.5	0.21	220	0	4	4	-10	60	FKM	E133K03	2995	495870	2-22	Ex nc AC IIC T3/T4	8	9	2.0	3510
	2.5	3.5	0.21	220	0	4	4	-10	100	FKM	E133K03	2995	481865	-	-	8	9	2.0	3510
	2.5	3.5	0.21	220	0	4	4	-10	65	FKM	E133K0350 [1]	-	495905	1-21	Ex db mb IIC T4	8	8	2.1	8023
	2.5	3.5	0.21	220	0	4	4	-10	60	FKM	E133K0350 [1]	2995	495870	2-22	Ex nc AC IIC T3/T4	8	9	2.1	3510
	2.5	3.5	0.21	220	0	4	4	-10	100	FKM	E133K0350 [1]	2995	481865	-	-	8	9	2.1	3510

Notes:
1. With manual override
2.If media is water, max admissible fluid temperature is 40°C

For this page	Port size	Orifice (mm)	kv (l/min)	MOPD (bar)	Fluid Temp (°C)	Amb Temp (°C)
From	1/4"	0.8	0.3	3	-20	-20
To	1/4"	2.5	3.5	30	100	50

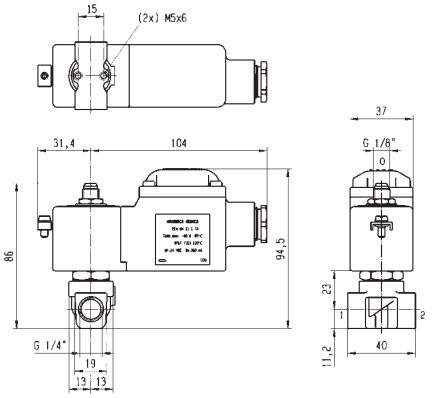



Drawing 8023

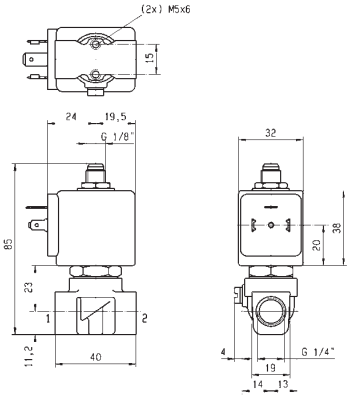



Drawing 3510

Tel: +45 63 12 83 00 | Email: ps@hymatik.com | www.hymatik.com | Hvidkaervej 27a, DK-5250 Odense SV, Denmark

3/2

3 WAY VALVES DIRECT OPERATED

K SERIES - BRASS VALVES FOR PIPE MOUNTING

BRASS
PIPE MOUNTING

CONTROL BY ELECTRIC IMPULSE

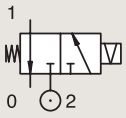

Port size	Orifice Ø	Flow factor			Operating Pressure Differential Min	Max(MOPD)		Fluid Temp. Min	Max	Seat Seal	Valve Ref.	Housing Ref.	Coil Ref.	ATEX Zone	Protection Mode	Power		Coil Group	Dwg. No.
BSP	mm	Kv l/min	KV m³/h	Qn l/min	bar	AC bar	DC bar	°C	°C							AC W	DC W		
1/4"	1.5	1.5	0.09	80	0	-	16	-10	100	FKM	135K04	4269	485400	-	-	-	13	4.0	8104
	1.5	1.5	0.09	80	0	16	-	-10	100	FKM	135K04	4269	484990	-	-	11	-	4.0	8104
	2.5	3.5	0.21	220	0	7	-	-10	100	FKM	135K03	4269	484990	-	-	11	-	4.0	8104
	2.5	3.5	0.21	220	0	-	7	-10	100	FKM	135K03	4269	485400	-	-	-	13	4.0	8104

Tel: +45 63 12 83 00 | Email: ps@hymatik.com | www.hymatik.com | Hvidkaervej 27a, DK-5250 Odense SV, Denmark

For this page	Port size	Orifice (mm)	kv (l/min)	MOPD (bar)	Fluid Temp (°C)	Amb Temp (°C)
From	1/4"	1.5	1.5	7	-10	-10
To	1/4"	2.5	3.5	16	100	50

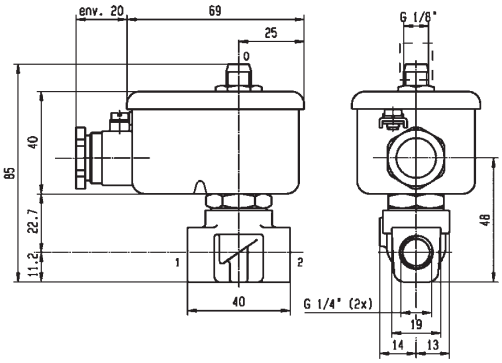



Drawing 8104

Tel: +45 63 12 83 00 | Email: ps@hymatik.com | www.hymatik.com | Hvidkaervej 27a, DK-5250 Odense SV, Denmark



3 WAY VALVES DIRECT OPERATED

T SERIES - BRASS VALVES, PIPE MOUNTING



3/2

Actuation	Body	Function	Port Size	Orifice (mm)	Flow Factor Kv(l/min)	MOPD (bar)	Max Fluid Temp. (°C)	Page
Direct Operated	Brass/Pipe Mounting	Normally Closed	1/4"	2 to 4.5	7	10	75	64
		Normally Open	1/4"	2 to 3	4.5	10	75	66
		Universal	1/4"	2 to 3	4.5	7	75	68

3/2 3 WAY VALVES DIRECT OPERATED

T SERIES - BRASS VALVES, PIPE MOUNTING

BRASS
PIPE MOUNTING
NORMALLY CLOSED

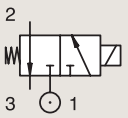

Port size	Orifice Ø	Flow factor			Operating Pressure Differential Min	Max(MOPD)		Fluid Temp. Min	Max	Seat Seal	Valve Ref.	Housing Ref.	Coil Ref.	ATEX Zone	Protection Mode	Power		Coil Group	Dwg. No.
BSP	mm	Kv l/min	KV m³/h	Qn l/min	bar	AC bar	DC bar	°C	°C							AC W	DC W		
	2	2.5	0.15	140	0	10	10	-10	65	FKM	131T23	-	495905	1-21	Ex db mb IIC T4	8	8	2.0	8356
	2	2.5	0.15	140	0	10	10	-10	60	FKM	131T23	2995	495870	2-22	Ex nc AC IIC T3/T4	8	9	2.0	8356
	2	2.5	0.15	140	0	10	10	-10	75	FKM	131T23	2995	481865	-	-	8	9	2.0	8356
	2	2.5	0.15	140	0	10	10	-10	65	FKM	131T2301 [1]	-	495905	1-21	Ex db mb IIC T4	8	8	2.0	8345
	2	2.5	0.15	140	0	10	10	-10	60	FKM	131T2301 [1]	2995	495870	2-22	Ex nc AC IIC T3/T4	8	9	2.0	8345
	2	2.5	0.15	140	0	10	10	-10	75	FKM	131T2301 [1]	2995	481865	-	-	8	9	2.0	8345
	2.5	3.5	0.21	220	0	7	7	-10	65	FKM	131T29	-	495905	1-21	Ex db mb IIC T4	8	8	2.1	8356
	2.5	3.5	0.21	220	0	7	7	-10	60	FKM	131T29	2995	495870	2-22	Ex nc AC IIC T3/T4	8	9	2.1	8356
	2.5	3.5	0.21	220	0	7	7	-10	75	FKM	131T29	2995	481865	-	-	8	9	2.1	8356
1/4"	2.5	3.5	0.21	220	0	7	7	-10	65	FKM	131T2901 [1]	-	495905	1-21	Ex db mb IIC T4	8	8	2.1	8345
	2.5	3.5	0.21	220	0	7	7	-10	60	FKM	131T2901 [1]	2995	495870	2-22	Ex nc AC IIC T3/T4	8	9	2.1	8345
	2.5	3.5	0.21	220	0	7	7	-10	75	FKM	131T2901 [1]	2995	481865	-	-	8	9	2.1	8345
	3	4.5	0.27	355	0	10	-	-10	75	FKM	131T22	2995	492425	-	-	14	-	2.2	8356
	3	4.5	0.27	355	0	10	-	-10	75	FKM	131T22	4270	481044	-	-	14	-	2.2	8356
	4.5	7	0.42	500	0	2	2	-10	65	FKM	131T21	-	495905	1-21	Ex db mb IIC T4	8	8	2.0	8356
	4.5	7	0.42	500	0	2	2	-10	60	FKM	131T21	2995	495870	2-22	Ex nc AC IIC T3/T4	8	9	2.0	8356
	4.5	7	0.42	500	0	2	2	-10	75	FKM	131T21	2995	481865	-	-	8	9	2.0	8356
	4.5	7	0.42	500	0	2	2	-10	65	FKM	131T2101 [1]	-	495905	1-21	Ex db mb IIC T4	8	8	2.1	8345
	4.5	7	0.42	500	0	2	2	-10	60	FKM	131T2101 [1]	2995	495870	2-22	Ex nc AC IIC T3/T4	8	9	2.1	8345
	4.5	7	0.42	500	0	2	2	-10	75	FKM	131T2101 [1]	2995	481865	-	-	8	9	2.1	8345

Notes:
1. With manual override

Tel: +45 63 12 83 00 | Email: ps@hymatik.com | www.hymatik.com | Hvidkaervej 27a, DK-5250 Odense SV, Denmark

For this page	Port size	Orifice (mm)	kv (l/min)	MOPD (bar)	Fluid Temp (°C)	Amb Temp (°C)
From	1/4"	2	2.5	2	-10	-10
To	1/4"	4.5	7	10	75	50

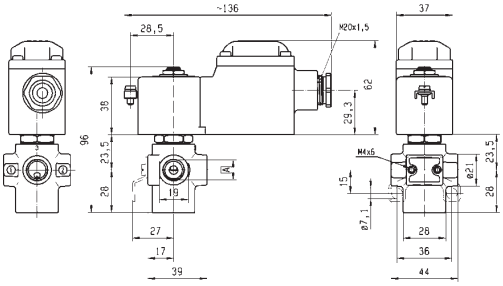



Drawing 8356

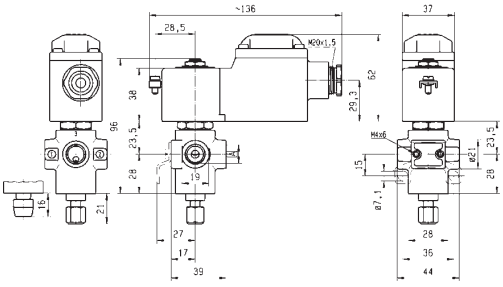



Drawing 8345

Parker Hannifin Corporation
Fluid Control Solutions Europe
Process Catalogue FCSE/1121/UK/V1.0

3/2 3 WAY VALVES DIRECT OPERATED

T SERIES - BRASS VALVES, PIPE MOUNTING

BRASS
PIPE MOUNTING
NORMALLY OPEN

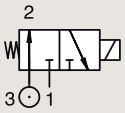

Port size	Orifice Ø	Flow factor			Operating Pressure Differential Max(MOPD)			Fluid Temp.		Seat Seal	Valve Ref.	Housing Ref.	Coil Ref.	ATEX Zone	Protection Mode	Power		Coil Group	Dwg. No.
					Min			Min	Max										
BSP	mm	Kv l/min	KV m³/h	Qn l/min	bar	AC bar	DC bar	°C	°C							AC W	DC W		
	2	2.5	0.15	140	0	10	5	-10	65	FKM	132T23	-	495905	1-21	Ex db mb IIC T4	8	8	2.0	8356
	2	2.5	0.15	140	0	10	5	-10	60	FKM	132T23	2995	495870	2-22	Ex nc AC IIC T3/T4	8	9	2.0	8356
	2	2.5	0.15	140	0	10	5	-10	75	FKM	132T23	2995	481865	-	-	8	9	2.0	8356
	2	2.5	0.15	140	0	10	5	-10	65	FKM	132T2301 [1]	-	495905	1-21	Ex db mb IIC T4	8	8	2.0	8345
	2	2.5	0.15	140	0	10	5	-10	60	FKM	132T2301 [1]	2995	495870	2-22	Ex nc AC IIC T3/T4	8	9	2.0	8345
1/4"	2	2.5	0.15	140	0	10	5	-10	75	FKM	132T2301 [1]	2995	481865	-	-	8	9	2.0	8345
	2.5	3.5	0.21	220	0	7	3.5	-10	65	FKM	132T29	-	495905	1-21	Ex db mb IIC T4	8	8	2.0	8356
	2.5	3.5	0.21	220	0	7	3.5	-10	60	FKM	132T29	2995	495870	2-22	Ex nc AC IIC T3/T4	8	9	2.0	8356
	2.5	3.5	0.21	220	0	7	3.5	-10	75	FKM	132T29	2995	481865	-	-	8	9	2.0	8356
	3	4.5	0.27	355	0	7	-	-10	75	FKM	132T22	2995	492425	-	-	14	-	2.2	8356
	3	4.5	0.27	355	0	10	-	-10	75	FKM	132T22	4270	481044	-	-	14	-	2.2	8356

Notes:
1. With manual override

For this page	Port size	Orifice (mm)	kv (l/min)	MOPD (bar)	Fluid Temp (°C)	Amb Temp (°C)
From	1/4"	2	2.5	3.5	-10	-10
To	1/4"	3	4.5	10	75	50

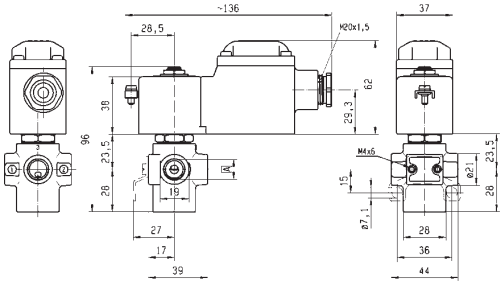



Drawing 8356

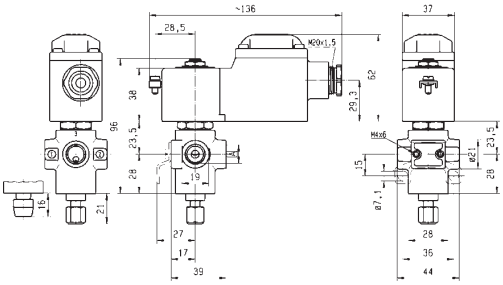



Drawing 8345

Parker Hannifin Corporation
Fluid Control Solutions Europe
Process Catalogue FCSE/1121/UK/V1.0

3/2 3 WAY VALVES DIRECT OPERATED

T SERIES -BRASS VALVES, PIPE MOUNTING

BRASS
PIPE MOUNTING
UNIVERSAL

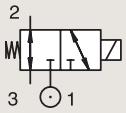

Port size	Orifice Ø	Flow factor			Operating Pressure Differential Max(MOPD)			Fluid Temp.		Seat Seal	Valve Ref.	Housing Ref.	Coil Ref.	ATEX Zone	Protection Mode	Power		Coil Group	Dwg. No.
					Min			Min	Max										
BSP	mm	Kv l/min	KV m³/h	Qn l/min	bar	AC bar	DC bar	°C	°C							AC W	DC W		
	2	2.5	0.15	140	0	7	7	-10	65	FKM	**133T23**	**-**	**495905**	1-21	Ex db mb IIC T4	8	8	2.1	8356
	2	2.5	0.15	140	0	7	7	-10	60	FKM	**133T23**	**2995**	**495870**	2-22	Ex nc AC IIC T3/T4	8	9	2.1	8356
	2	2.5	0.15	140	0	7	7	-10	75	FKM	**133T23**	**2995**	**481865**	-	-	8	9	2.1	8356
	2	2.5	0.15	140	0	7	7	-10	65	FKM	**133T2301** [1]	**-**	**495905**	1-21	Ex db mb IIC T4	8	8	2.1	8345
	2	2.5	0.15	140	0	7	7	-10	60	FKM	**133T2301** [1]	**2995**	**495870**	2-22	Ex nc AC IIC T3/T4	8	9	2.1	8345
1/4"	2	2.5	0.15	140	0	7	7	-10	75	FKM	**133T2301** [1]	**2995**	**481865**	-	-	8	9	2.1	8345
	3	4.5	0.27	355	0	2	2	-10	65	FKM	**133T21**	**-**	**495905**	1-21	Ex db mb IIC T4	8	8	2.1	8356
	3	4.5	0.27	355	0	2	2	-10	60	FKM	**133T21**	**2995**	**495870**	2-22	Ex nc AC IIC T3/T4	8	9	2.1	8356
	3	4.5	0.27	355	0	2	2	-10	75	FKM	**133T21**	**2995**	**481865**	-	-	8	9	2.1	8356
	3	4.5	0.27	355	0	2	2	-10	65	FKM	**133T2101** [1]	**-**	**495905**	1-21	Ex db mb IIC T4	8	8	2.1	8345
	3	4.5	0.27	355	0	2	2	-10	60	FKM	**133T2101** [1]	**2995**	**495870**	2-22	Ex nc AC IIC T3/T4	8	9	2.1	8345
	3	4.5	0.27	355	0	2	2	-10	75	FKM	**133T2101** [1]	**2995**	**481865**	-	-	8	9	2.1	8345

Notes:
1. With manual override

Tel: +45 63 12 83 00 | Email: ps@hymatik.com | www.hymatik.com | Hvidkaervej 27a, DK-5250 Odense SV, Denmark

IECEx certified

For this page	Port size	Orifice (mm)	kv (l/min)	MOPD (bar)	Fluid Temp (°C)	Amb Temp (°C)
From	1/4"	2	2.5	2	-10	-10
To	1/4"	3	4.5	7	75	50

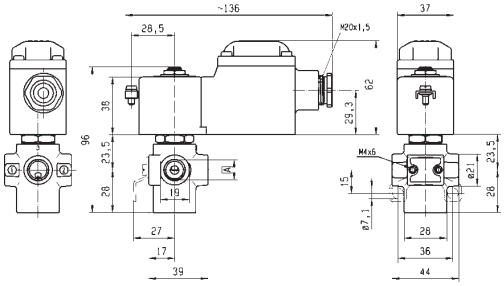



Drawing 8356

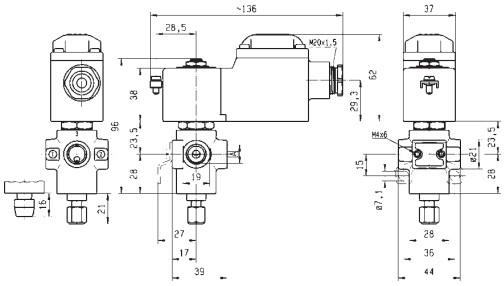



Drawing 8345

Parker Hannifin Corporation
Fluid Control Solutions Europe
Process Catalogue FCSE/1121/UK/V1.0

Tel: +45 63 12 83 00 | Email: ps@hymatik.com | www.hymatik.com | Hvidkaervej 27a, DK-5250 Odense SV, Denmark



3 WAY VALVES DIRECT OPERATED

F SERIES - BRASS, STAINLESS STEEL AND POM VALVES FOR FLANGE MOUNTING

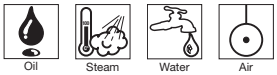

3/2

Actuation	Body	Function	Port Size	Orifice (mm)	Flow Factor Kv(l/min)	MOPD (bar)	Max Fluid Temp. (°C)	Page
Direct Operated	Brass/Sub-base Mounting	Normally Closed	5 mm	1 to 2.5	3.5	16	100	72
		Normally Open	5 mm	1.5 to 2.5	2.2	15	100	76
		Universal	5 mm	1.5 to 2.5	3.5	10	100	78
	316L Stainless St./Sub-base Mounting	Normally Closed	5 mm	1 to 2.5	3.5	15	100	80
			6 mm	2.5	3.5	12	75	82
	POM/Sub-base Mounting	Normally Closed	3 mm	2	2	10	50	84

Tel: +45 63 12 83 00 | Email: ps@hymatik.com | www.hymatik.com | Hvidkaervej 27a, DK-5250 Odense SV, Denmark

3/2 3 WAY VALVES DIRECT OPERATED

F SERIES - BRASS, STAINLESS STEEL AND POM VALVES FOR FLANGE MOUNTING

BRASS
SUB-BASE MOUNTING
NORMALLY CLOSED

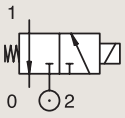

Port size	Orifice Ø	Flow factor			Operating Pressure Differential Min	Max(MOPD)		Fluid Temp. Min	Max	Seat Seal	Valve Ref.	Housing Ref.	Coil Ref.	ATEX Zone	Protection Mode	Power		Coil Group	Dwg. No.
	mm	Kv l/min	KV m³/h	Qn l/min	bar	AC bar	DC bar	°C	°C							AC W	DC W		
SB	1	0.6	0.04	38	0	-	10	-10	55	FKM	131F4490	2995	483580.01	0-20	Ex ia IIC T6	-	0.5 to 3	6.0/7.0/8.0	7057
	1	0.6	0.04	38	0	-	10	-10	65	FKM	131F4490	-	495910	0-20	Ex ia IIC T4 to T6	-	0.3 to 3	6.0/7.0/8.0	7057
	1	0.6	0.04	38	0	10	10	-10	65	FKM	131F4490	-	495900	1-21	Ex db mb IIC T4 to T6	2.5	2	6.0/7.0/8.0	7057
	1.5	1.5	0.09	80	0	16	16	-10	65	FKM	131F4410	-	495905	1-21	Ex db mb IIC T4	8	8	2.1	8022
	1.5	1.5	0.09	80	0	16	16	-10	60	FKM	131F4410	2995	495870	2-22	Ex nc AC IIC T3/T4	8	9	2.1	3509
	1.5	1.5	0.09	80	0	16	16	-10	100	FKM	131F4410	2995	481865	-	-	8	9	2.1	3509
	1.5	1.5	0.09	80	0	-	7	-20	65	PUR	131F4497 [2]	-	495910	0-20	Ex ia IIC T4 to T6	-	0.3 to 3	6.0/8.0	8022
	1.5	1.5	0.09	80	0	7	7	-20	65	PUR	131F4497 [2]	-	495900	1-21	Ex db mb IIC T4 to T6	2.5	2	6.0/8.0	8022
	1.5	1.5	0.09	80	0	-	7	-20	50	PUR	131F4497 [2]	2995	496125	2-22	Ex nAC IIC T5/T6	-	1.6	6.0/8.0	3509
	1.5	1.5	0.09	80	0	-	7	-20	75	PUR	131F4497 [2]	2995	482740	-	-	-	1.6	6.0/8.0	3509
	1.5	1.5	0.09	80	0	15	15	-10	65	FKM	E131F44	-	495905	1-21	Ex db mb IIC T4	8	8	2.1	8022
	1.5	1.5	0.09	80	0	15	15	-10	60	FKM	E131F44	2995	495870	2-22	Ex nc AC IIC T3/T4	8	9	2.1	3509
	1.5	1.5	0.09	80	0	15	15	-10	100	FKM	E131F44	2995	481865	-	-	8	9	2.1	3509
	1.5	1.5	0.09	80	0	15	15	-10	65	FKM	E131F4450 [1]	-	495905	1-21	Ex db mb IIC T4	8	8	2.1	8022
	1.5	1.5	0.09	80	0	15	15	-10	60	FKM	E131F4450 [1]	2995	495870	2-22	Ex nc AC IIC T3/T4	8	9	2.1	3509
	1.5	1.5	0.09	80	0	15	15	-10	100	FKM	E131F4450 [1]	2995	481865	-	-	8	9	2.1	3509
	2	2.5	0.15	140	0	10	10	-10	65	FKM	131F46	-	495905	1-21	Ex db mb IIC T4	8	8	2.1	8022
	2	2.5	0.15	140	0	10	10	-10	60	FKM	131F46	2995	495870	2-22	Ex nc AC IIC T3/T4	8	9	2.1	3509
	2	2.5	0.15	140	0	10	10	-10	100	FKM	131F46	2995	481865	-	-	8	9	2.1	3509
	2	2.5	0.15	140	0	7	7	-10	65	FKM	131F4650 [1]	-	495905	1-21	Ex db mb IIC T4	8	8	2.1	8022
	2	2.5	0.15	140	0	7	7	-10	60	FKM	131F4650 [1]	2995	495870	2-22	Ex nc AC IIC T3/T4	8	9	2.1	3509
	2	2.5	0.15	140	0	7	7	-10	100	FKM	131F4650 [1]	2995	481865	-	-	8	9	2.1	3509

Notes:
1. With manual override
2.If media is water, max admissible fluid temperature is 40°C

Tel: +45 63 12 83 00 | Email: ps@hymatik.com | www.hymatik.com | Hvidkaervej 27a, DK-5250 Odense SV, Denmark

IECEx certified

For this page	Port size	Orifice (mm)	kv (l/min)	MOPD (bar)	Fluid Temp (°C)	Amb Temp (°C)
From	5 mm	1	0.6	7	-20	-20
To	5 mm	2	2.5	16	100	50

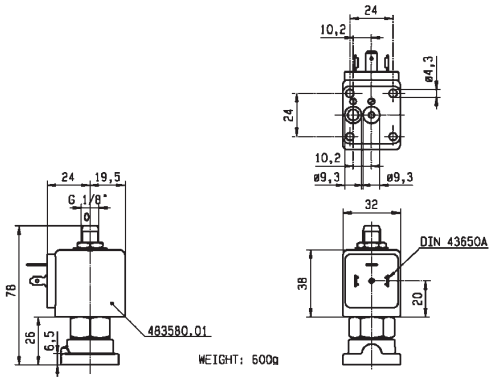



Drawing 7057

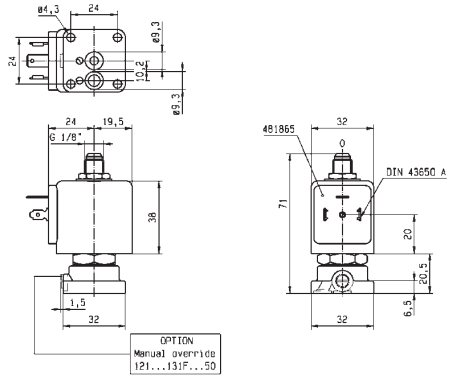



Drawing 3509

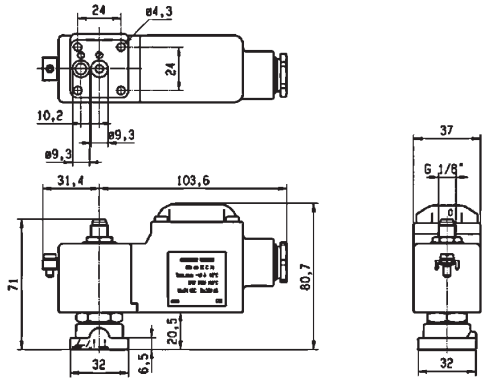



Drawing 8022

Parker Hannifin Corporation
Fluid Control Solutions Europe
Process Catalogue FCSE/1121/UK/V1.0

Tel: +45 63 12 83 00 | Email: ps@hymatik.com | www.hymatik.com | Hvidkaervej 27a, DK-5250 Odense SV, Denmark

3/2 3 WAY VALVES DIRECT OPERATED

F SERIES - BRASS, STAINLESS STEEL AND POM VALVES FOR FLANGE MOUNTING

BRASS
SUB-BASE MOUNTING
NORMALLY CLOSED

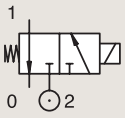

Port size	Orifice Ø	Flow factor			Operating Pressure Differential Min	Max(MOPD)		Fluid Temp. Min	Max	Seat Seal	Valve Ref.	Housing Ref.	Coil Ref.	ATEX Zone	Protection Mode	Power AC W	Power DC W	Coil Group	Dwg. No.
	mm	Kv l/min	KV m³/h	Qn l/min	bar	AC bar	DC bar	°C	°C										
SB	2.5	3.5	0.21	220	0	9	9	-30	65	PUR	131F4310 [1]	-	495905	1-21	Ex db mb IIC T4	8	8	2.1	8022
	2.5	3.5	0.21	220	0	9	9	-30	60	PUR	131F4310 [1]	2995	495870	2-22	Ex nc AC IIC T3/T4	8	9	2.1	3509
	2.5	3.5	0.21	220	0	9	9	-30	75	PUR	131F4310 [1]	2995	481865	-	-	8	9	2.1	3509
	2.5	3	0.18	180	0	-	2	-20	65	PUR	131F4397 [1]	-	495910	0-20	Ex ia IIC T4 to T6	-	0.3 to 3	6.0/8.0	8022
	2.5	3	0.18	180	0	2	2	-20	65	PUR	131F4397 [1]	-	495900	1-21	Ex db mb IIC T4 to T6	2.5	2	6.0/8.0	8022
	2.5	3	0.18	180	0	-	2	-20	50	PUR	131F4397 [1]	2995	496125	2-22	Ex nAC IIC T5/T6	-	1.6	6.0/8.0	3509
	2.5	3	0.18	180	0	-	2	-20	75	PUR	131F4397 [1]	2995	482740	-	-	-	1.6	6.0/8.0	3509
	2.5	3.5	0.21	220	0	7	7	-10	65	FKM	E131F43	-	495905	1-21	Ex db mb IIC T4	8	8	2.1	8022
	2.5	3.5	0.21	220	0	7	7	-10	60	FKM	E131F43	2995	495870	2-22	Ex nc AC IIC T3/T4	8	9	2.1	3509
	2.5	3.5	0.21	220	0	7	7	-10	100	FKM	E131F43	2995	481865	-	-	8	9	2.1	3509
	2.5	3.5	0.21	220	0	7	7	-10	65	FKM	E131F4350 [2]	-	495905	1-21	Ex db mb IIC T4	8	8	2.1	8022
	2.5	3.5	0.21	220	0	7	7	-10	60	FKM	E131F4350 [2]	2995	495870	2-22	Ex nc AC IIC T3/T4	8	9	2.1	3509
	2.5	3.5	0.21	220	0	7	7	-10	100	FKM	E131F4350 [2]	2995	481865	-	-	8	9	2.1	3509

Notes:
1. Valve only compatible with air and neutral gases
2. With manual override

For this page	Port size	Orifice (mm)	kv (l/min)	MOPD (bar)	Fluid Temp (°C)	Amb Temp (°C)
From	5 mm	2.5	3	2	-30	-30
To	5 mm	2.5	3.5	9	100	50

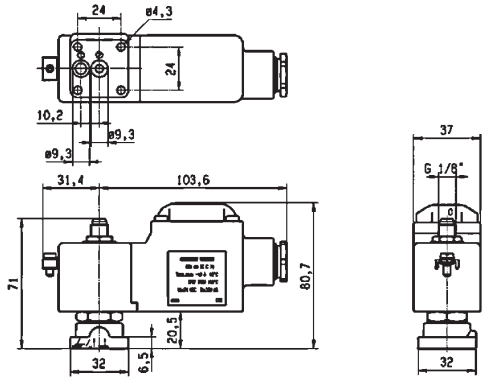



Drawing 8022

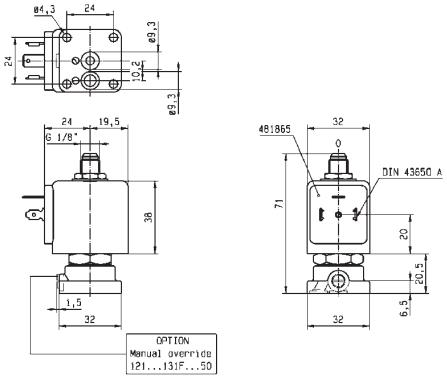



Drawing 3509

3/2 3 WAY VALVES DIRECT OPERATED

F SERIES - BRASS, STAINLESS STEEL AND POM VALVES FOR FLANGE MOUNTING

BRASS
SUB-BASE MOUNTING
NORMALLY OPEN

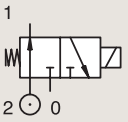

Port size	Orifice Ø	Flow factor			Operating Pressure Differential Min	Max(MOPD)		Fluid Temp. Min	Max	Seat Seal	Valve Ref.	Housing Ref.	Coil Ref.	ATEX Zone	Protection Mode	Power		Coil Group	Dwg. No.
	mm	Kv l/min	KV m³/h	Qn l/min	bar	AC bar	DC bar	°C	°C							AC W	DC W		
SB	1.5	1.4	0.08	80	0	15	15	-10	65	FKM	**132F44**	**-**	**495905**	1-21	Ex db mb IIC T4	8	8	2.1	8022
	1.5	1.4	0.08	80	0	15	15	-10	60	FKM	**132F44**	**2995**	**495870**	2-22	Ex nc AC IIC T3/T4	8	9	2.1	3509
	1.5	1.4	0.08	80	0	15	15	-10	100	FKM	**132F44**	**2995**	**481865**	-	-	8	9	2.1	3509
	2	1.8	0.11	125	0	10	10	-10	65	FKM	**132F46**	**-**	**495905**	1-21	Ex db mb IIC T4	8	8	2.1	8022
	2	1.8	0.11	125	0	10	10	-10	60	FKM	**132F46**	**2995**	**495870**	2-22	Ex nc AC IIC T3/T4	8	9	2.1	3509
	2	1.8	0.11	125	0	10	10	-10	100	FKM	**132F46**	**2995**	**481865**	-	-	8	9	2.1	3509
	2.5	2.2	0.13	160	0	7	7	-10	65	FKM	**132F43**	**-**	**495905**	1-21	Ex db mb IIC T4	8	8	2.1	8022
	2.5	2.2	0.13	160	0	7	7	-10	60	FKM	**132F43**	**2995**	**495870**	2-22	Ex nc AC IIC T3/T4	8	9	2.1	3509
	2.5	2.2	0.13	160	0	7	7	-10	100	FKM	**132F43**	**2995**	**481865**	-	-	8	9	2.1	3509
	2.5	2.2	0.13	160	0	7	7	-10	65	PUR	**132F4301** [1]	**-**	**495905**	1-21	Ex db mb IIC T4	8	8	2.1	8022
	2.5	2.2	0.13	160	0	7	7	-10	60	PUR	**132F4301** [1]	**2995**	**495870**	2-22	Ex nc AC IIC T3/T4	8	9	2.1	3509
	2.5	2.2	0.13	160	0	7	7	-10	75	PUR	**132F4301** [1]	**2995**	**481865**	-	-	8	9	2.1	3509

Notes:
1. Valve only compatible with air and neutral gases

Tel: +45 63 12 83 00 | Email: ps@hymatik.com | www.hymatik.com | Hvidkaervej 27a, DK-5250 Odense SV, Denmark

For this page	Port size	Orifice (mm)	kv (l/min)	MOPD (bar)	Fluid Temp (°C)	Amb Temp (°C)
From	5 mm	1.5	1.4	7	-10	-10
To	5 mm	2.5	2.2	15	100	50

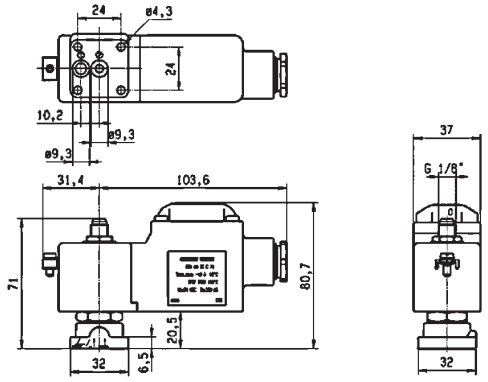



Drawing 8022

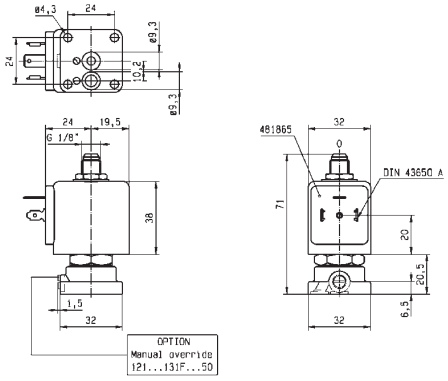



Drawing 3509

3/2 3 WAY VALVES DIRECT OPERATED

F SERIES - BRASS, STAINLESS STEEL AND POM VALVES FOR FLANGE MOUNTING

BRASS
SUB-BASE MOUNTING
UNIVERSAL

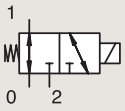

Port size	Orifice Ø	Flow factor			Operating Pressure Differential Min	Max(MOPD)		Fluid Temp. Min	Max	Seat Seal	Valve Ref.	Housing Ref.	Coil Ref.	ATEX Zone	Protection Mode	Power		Coil Group	Dwg. No.
	mm	Kv l/min	KV m³/h	Qn l/min	bar	AC bar	DC bar	°C	°C							AC W	DC W		
SB	1.5	1.5	0.09	80	0	10	10	-10	65	FKM	E133F44	-	495905	1-21	Ex db mb IIC T4	8	8	2.1	8022
	1.5	1.5	0.09	80	0	10	10	-10	60	FKM	E133F44	2995	495870	2-22	Ex nc AC IIC T3/T4	8	9	2.1	3509
	1.5	1.5	0.09	80	0	10	10	-10	100	FKM	E133F44	2995	481865	-	-	8	9	2.1	3509
	1.5	1.5	0.09	80	0	10	10	-10	65	FKM	E133F4450 [1]	-	495905	1-21	Ex db mb IIC T4	8	8	2.1	8022
	1.5	1.5	0.09	80	0	10	10	-10	60	FKM	E133F4450 [1]	2995	495870	2-22	Ex nc AC IIC T3/T4	8	9	2.1	3509
	1.5	1.5	0.09	80	0	10	10	-10	100	FKM	E133F4450 [1]	2995	481865	-	-	8	9	2.1	3509
	2	2.5	0.15	140	0	7	7	-10	65	FKM	133F46	-	495905	1-21	Ex db mb IIC T4	8	8	2.1	8022
	2	2.5	0.15	140	0	7	7	-10	60	FKM	133F46	2995	495870	2-22	Ex nc AC IIC T3/T4	8	9	2.1	3509
	2	2.5	0.15	140	0	7	7	-10	100	FKM	133F46	2995	481865	-	-	8	9	2.1	3509
	2	2.5	0.15	140	0	7	7	-10	65	FKM	133F4650 [1]	-	495905	1-21	Ex db mb IIC T4	8	8	2.1	8022
	2	2.5	0.15	140	0	7	7	-10	60	FKM	133F4650 [1]	2995	495870	2-22	Ex nc AC IIC T3/T4	8	9	2.1	3509
	2	2.5	0.15	140	0	7	7	-10	100	FKM	133F4650 [1]	2995	481865	-	-	8	9	2.1	3509
	2.5	3.5	0.21	220	0	4	4	-10	40	FKM	E133F43	-	495905	1-21	Ex db mb IIC T4	8	8	2.1	8022
	2.5	3.5	0.21	220	0	4	4	-10	60	FKM	E133F43	2995	495870	2-22	Ex nc AC IIC T3/T4	8	9	2.1	3509
	2.5	3.5	0.21	220	0	4	4	-10	100	FKM	E133F43	2995	481865	-	-	8	9	2.1	3509

Notes:
1. With manual override

Tel: +45 63 12 83 00 | Email: ps@hymatik.com | www.hymatik.com | Hvidkaervej 27a, DK-5250 Odense SV, Denmark

For this page	Port size	Orifice (mm)	kv (l/min)	MOPD (bar)	Fluid Temp (°C)	Amb Temp (°C)
From	5 mm	1.5	1.5	4	-10	-10
To	5 mm	2.5	3.5	10	100	50

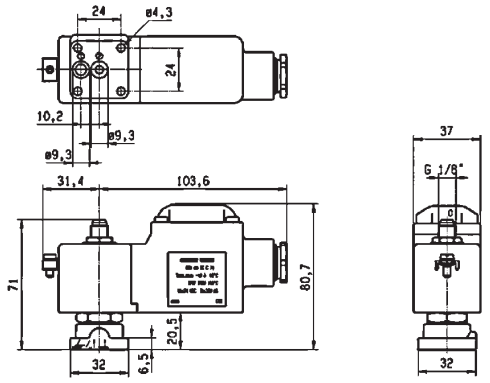



Drawing 8022

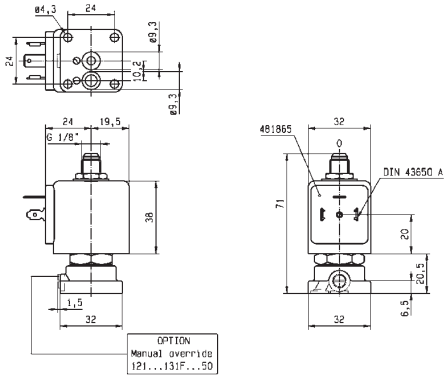



Drawing 3509

3/2 3 WAY VALVES DIRECT OPERATED

F SERIES - BRASS, STAINLESS STEEL AND POM VALVES FOR FLANGE MOUNTING

316L STAINLESS ST. SUB-BASE MOUNTING

NORMALLY CLOSED

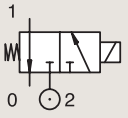

Port size	Orifice Ø	Flow factor			Operating Pressure Differential Min	Max(MOPD)		Fluid Temp. Min	Max	Seat Seal	Valve Ref.	Housing Ref.	Coil Ref.	ATEX Zone	Protection Mode	Power		Coil Group	Dwg. No.
	mm	Kv l/min	KV m³/h	Qn l/min	bar	AC bar	DC bar	°C	°C							AC W	DC W		
SB	1.5	1.5	0.09	80	0	15	15	-10	65	FKM	**131F5406**	-	**495905**	1-21	Ex db mb IIC T4	8	8	2.1	8174
	1.5	1.5	0.09	80	0	15	15	-10	60	FKM	**131F5406**	**2995**	**495870**	2-22	Ex nc AC IIC T3/T4	8	9	2.1	3509
	1.5	1.5	0.09	80	0	15	15	-10	100	FKM	**131F5406**	**2995**	**481865**	-	-	8	9	2.1	3509
	2.5	3.5	0.21	220	0	-	12	-25	65	FKM	**U131F5695** [1]	-	**492965.01**	0-20	Ex ia IIC T6	-	0.3 to 3	9.0/10.1/10.2	3782
	2.5	3.5	0.21	220	0	-	12	-25	45	FKM	**U131F5695** [1]	-	**496565**	0-20	Ex ia IIB/IIC T4 to T6	-	0.3	9.0/10.1/10.2	8174
	2.5	3.5	0.21	220	0	-	12	-25	65	FKM	**U131F5695** [1]	-	**492210**	1-21	Ex eb mb IIC T5 to T6	-	1 to 1.8	9.0/10.1/10.2	3782
	2.5	3.5	0.21	220	0	12	12	-25	75	FKM	**U131F5695** [1]	-	**492310**	1-21	Ex mb II T4 to T5	6	6	9.0/10.1/10.2	3782
	2.5	3.5	0.21	220	0	12	12	-25	65	FKM	**U131F5695** [1]	-	**496800**	1-21	Ex db mb IIC T4	8	8	9.0/10.1/10.2	8174
	2.5	3.5	0.21	220	0	12	12	-25	55	FKM	**U131F5695** [1]	-	**496560**	1-21	Ex db mb IIC T4	8	8	9.0/10.1/10.2	8174
	2.5	3.5	0.21	220	0	12	12	-25	50	FKM	**U131F5695** [1]	-	**496895**	-	-	8	8	9.0/10.1/10.2	8174

Notes:
1. Valve delivered with an individual material traceability certificate (3.1 following EN10204)

Tel: +45 63 12 83 00 | Email: ps@hymatik.com | www.hymatik.com | Hvidkaervej 27a, DK-5250 Odense SV, Denmark

IECEx certified

For this page	Port size	Orifice (mm)	kv (l/min)	MOPD (bar)	Fluid Temp (°C)	Amb Temp (°C)
From	5 mm	1.5	1.5	12	-25	-25
To	5 mm	2.5	3.5	15	100	50

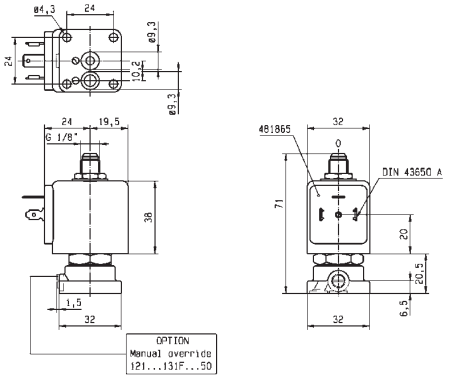



Drawing 3509

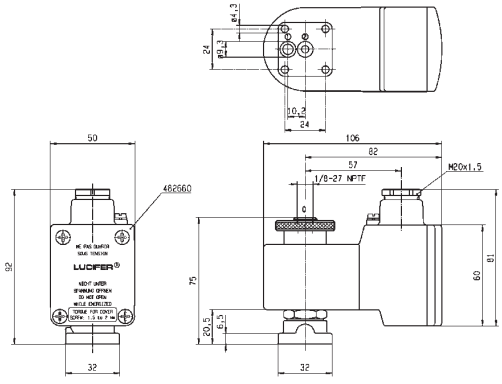



Drawing 3782

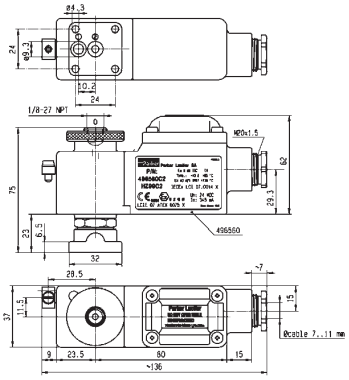



Drawing 8174

Parker Hannifin Corporation
Fluid Control Solutions Europe
Process Catalogue FCSE/1121/UK/V1.0

3/2 3 WAY VALVES DIRECT OPERATED

F SERIES - BRASS, STAINLESS STEEL AND POM VALVES FOR FLANGE MOUNTING

316L STAINLESS ST. SUB-BASE MOUNTING

NORMALLY CLOSED

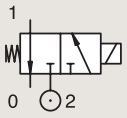

Port size	Orifice Ø	Flow factor			Operating Pressure Differential Min	Max (MOPD)		Fluid Temp. Min	Max	Seat Seal	Valve Ref.	Housing Ref.	Coil Ref.	ATEX Zone	Protection Mode	Power		Coil Group	Dwg. No.
	mm	Kv l/min	KV m³/h	Qn l/min	bar	AC bar	DC bar	°C	°C							AC W	DC W		
SB	2.5	3.5	0.21	220	0	-	12	-25	75	FKM	U131F5295 [1]	-	496565	0-20	Ex ia IIB/IIC T4 to T6	-	0.3	9.0/10.1/10.2	8174
	2.5	3.5	0.21	220	0	12	12	-25	65	FKM	U131F5295 [1]	-	496800	1-21	Ex db mb IIC T4	8	8	9.0/10.1/10.2	8174
	2.5	3.5	0.21	220	0	12	12	-25	65	FKM	U131F5295 [1]	-	496560	1-21	Ex db mb IIC T4	8	8	9.0/10.1/10.2	8174
	2.5	3.5	0.21	220	0	-	12	-25	75	FKM	U131F5295 [1]	-	492210	1-21	Ex eb mb IIC T5 to T6	-	1 to 1.8	9.0/10.1/10.2	8343
	2.5	3.5	0.21	220	0	12	12	-25	75	FKM	U131F5295 [1]	-	492310	1-21	Ex mb II T4 to T5	6	6	9.0/10.1/10.2	8343
	2.5	3.5	0.21	220	0	12	12	-25	50	FKM	U131F5295 [1]	-	496895	-	-	8	8	9.0/10.1/10.2	8174
	2.5	3.5	0.21	220	0	-	12	-25	50	FKM	U131F7695	-	496565	0-20	Ex ia IIB/IIC T4 to T6	-	0.3	9.0/10.1/10.2/10.3	8174
	2.5	3.5	0.21	220	0	12	12	-25	75	FKM	U131F7695	-	497105	1-21	Ex db IIC T4 to T6	8	8	9.0/10.1/10.2/10.3	8302
	2.5	3.5	0.21	220	0	12	12	-25	65	FKM	U131F7695	-	496800	1-21	Ex db mb IIC T4	8	8	9.0/10.1/10.2/10.3	8174
	2.5	3.5	0.21	220	0	12	12	-25	50	FKM	U131F7695	-	496895	-	-	8	8	9.0/10.1/10.2/10.3	8174

Notes:
1. Valve only compatible with air and neutral gases

Tel: +45 63 12 83 00 | Email: ps@hymatik.com | www.hymatik.com | Hvidkaervej 27a, DK-5250 Odense SV, Denmark

IECEx certified

For this page	Port size	Orifice (mm)	kv (l/min)	MOPD (bar)	Fluid Temp (°C)	Amb Temp (°C)
From	6 mm	2.5	3.5	12	-25	-25
To	6 mm	2.5	3.5	12	75	50

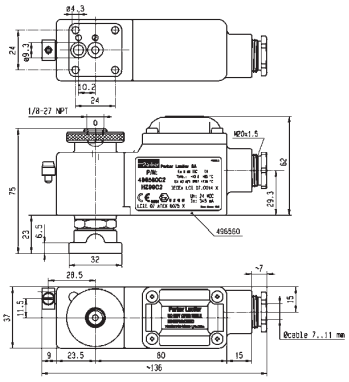



Drawing 8174

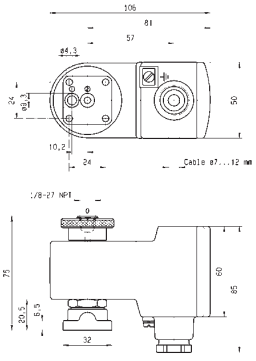

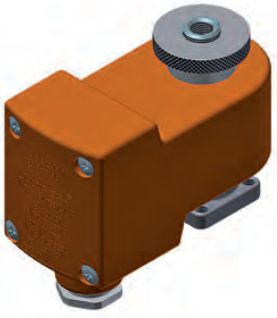

Drawing 8343

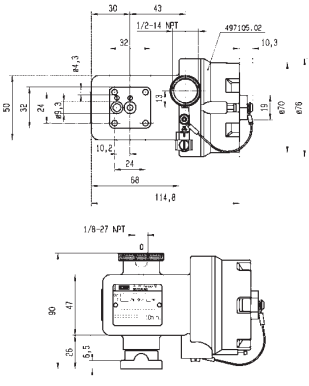



Drawing 8302

Tel: +45 63 12 83 00 | Email: ps@hymatik.com | www.hymatik.com | Hvidkaervej 27a, DK-5250 Odense SV, Denmark

3/2 3 WAY VALVES DIRECT OPERATED

F SERIES - BRASS, STAINLESS STEEL AND POM VALVES FOR FLANGE MOUNTING

POM
SUB-BASE MOUNTING
NORMALLY CLOSED

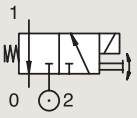

Port size	Orifice Ø	Flow factor			Operating Pressure Differential Min	Max(MOPD)		Fluid Temp. Min	Max	Seat Seal	Valve Ref.	Housing Ref.	Coil Ref.	ATEX Zone	Protection Mode	Power		Coil Group	Dwg. No.
	mm	Kv l/min	KV m³/h	Qn l/min	bar	AC bar	DC bar	°C	°C							AC W	DC W		
SB	2	2	0.12	140	0	10	10	-10	50	FKM	E131F26 [12]	-	495905	1-21	Ex db mb IIC T4	8	8	2.1/3.0	3601
	2	2	0.12	140	0	10	10	-10	50	FKM	E131F26 [12]	2995	495870	2-22	Ex nc AC IIC T3/T4	8	9	2.1/3.0	3601
	2	2	0.12	140	0	10	10	-10	50	FKM	E131F26 [12]	2995	481865	-	-	8	9	2.1/3.0	3601

Notes:
1. With manual override
2. 20% Switch-on - max. 2 min

For this page	Port size	Orifice (mm)	kv (l/min)	MOPD (bar)	Fluid Temp (°C)	Amb Temp (°C)
From	3 mm	2	2	10	-10	-10
To	3 mm	2	2	10	50	50

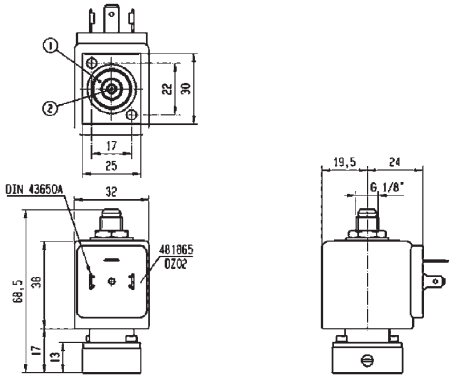



Drawing 3601

Tel: +45 63 12 83 00 | Email: ps@hymatik.com | www.hymatik.com | Hvidkaervej 27a, DK-5250 Odense SV, Denmark



3 WAY VALVES DIRECT OPERATED

V SERIES - STAINLESS STEEL VALVES FOR PIPE MOUNTING

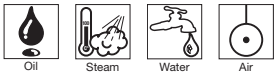

3/2

Actuation	Body	Function	Port Size	Orifice (mm)	Flow Factor Kv(l/min)	MOPD (bar)	Max Fluid Temp. (°C)	Page
Direct Operated	316L Stainless St./Pipe Mounting	Universal	1/4"	2 to 2.5	3.5	12	75	88
	303 Stainless St./Pipe Mounting	Normally Closed	1/4"	1 to 2.5	3.5	15	180	90
		Universal	1/4"	1.5 to 2.5	3.5	10	100	94

3/2 3 WAY VALVES DIRECT OPERATED

V SERIES - STAINLESS STEEL VALVES FOR PIPE MOUNTING

316L STAINLESS ST. PIPE MOUNTING

UNIVERSAL

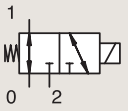

Port size	Orifice Ø	Flow factor			Operating Pressure Differential Min	Max(MOPD)		Fluid Temp. Min	Max	Seat Seal	Valve Ref.	Housing Ref.	Coil Ref.	ATEX Zone	Protection Mode	Power		Coil Group	Dwg. No.
	mm	Kv l/min	KV m³/h	Qn l/min	bar	AC bar	DC bar	°C	°C							AC W	DC W		
1/4" NPT	2	2.5	0.15	140	0	-	12	-25	65	FKM	U133V5595 [1]	-	496565	0-20	Ex ia IIB/IIC T4 to T6	-	0.3	9.0/10.1	8024
	2	2.5	0.15	140	0	12	12	-25	65	FKM	U133V5595 [1]	-	492310	1-21	Ex mb II T4 to T5	6	6	9.0/10.1	6713
	2	2.5	0.15	140	0	12	12	-25	65	FKM	U133V5595 [1]	-	496800	1-21	Ex db mb IIC T4	8	8	9.0/10.1	8024
	2	2.5	0.15	140	0	12	12	-25	65	FKM	U133V5595 [1]	-	496560	1-21	Ex db mb IIC T4	8	8	9.0/10.1	8024
	2	2.5	0.15	140	0	12	12	-25	50	FKM	U133V5595 [1]	-	496895	-	-	8	8	9.0/10.1	8024
	2	2.5	0.15	140	0	-	12	-25	65	FKM	U133V7595	-	496565	0-20	Ex ia IIB/IIC T4 to T6	-	0.3	9.0/10.1/10.3	8166
	2	2.5	0.15	140	0	12	12	-25	65	FKM	U133V7595	-	496800	1-21	Ex db mb IIC T4	8	8	9.0/10.1/10.3	8166
	2	2.5	0.15	140	0	12	12	-25	65	FKM	U133V7595	-	497105	1-21	Ex db IIC T4 to T6	8	8	9.0/10.1/10.3	8299
	2	2.5	0.15	140	0	12	12	-25	50	FKM	U133V7595	-	496895	-	-	8	8	9.0/10.1/10.3	8166
	2.5	3.5	0.21	220	0	-	8.5	-25	65	FKM	U133V5695 [1]	-	496565	0-20	Ex ia IIB/IIC T4 to T6	-	0.3	9.0/10.1	8024
	2.5	3.5	0.21	220	0	8.5	8.5	-25	75	FKM	U133V5695 [1]	-	492310	1-21	Ex mb II T4 to T5	6	6	9.0/10.1	6713
	2.5	3.5	0.21	220	0	8.5	8.5	-25	65	FKM	U133V5695 [1]	-	496800	1-21	Ex db mb IIC T4	8	8	9.0/10.1	8024
	2.5	3.5	0.21	220	0	8.5	8.5	-25	65	FKM	U133V5695 [1]	-	496560	1-21	Ex db mb IIC T4	8	8	9.0/10.1	8024
	2.5	3.5	0.21	220	0	8.5	8.5	-25	50	FKM	U133V5695 [1]	-	496895	-	-	8	8	9.0/10.1	8024
	2.5	3.5	0.21	220	0	-	8.5	-25	65	FKM	U133V7695	-	496565	0-20	Ex ia IIB/IIC T4 to T6	-	0.3	9.0/10.1/10.3	8166
	2.5	3.5	0.21	220	0	8.5	8.5	-25	65	FKM	U133V7695	-	496800	1-21	Ex db mb IIC T4	8	8	9.0/10.1/10.3	8166
	2.5	3.5	0.21	220	0	8.5	8.5	-25	65	FKM	U133V7695	-	497105	1-21	Ex db IIC T4 to T6	8	8	9.0/10.1/10.3	8299
	2.5	3.5	0.21	220	0	8.5	8.5	-25	50	FKM	U133V7695	-	496895	-	-	8	8	9.0/10.1/10.3	8166

Notes:
1. Valve delivered with an individual material traceability certificate (3.1 following EN10204)

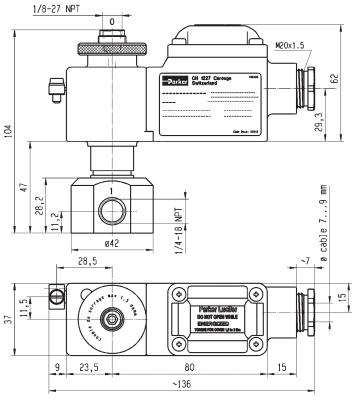



Drawing 8166

Tel: +45 63 12 83 00 | Email: ps@hymatik.com | www.hymatik.com | Hvidkaervej 27a, DK-5250 Odense SV, Denmark

IECEx certified

For this page	Port size	Orifice (mm)	Kv (l/min)	MOPD (bar)	Fluid Temp (°C)	Amb Temp (°C)
From	1/4"	2	2.5	8.5	-25	-25
To	1/4"	2.5	3.5	12	75	50

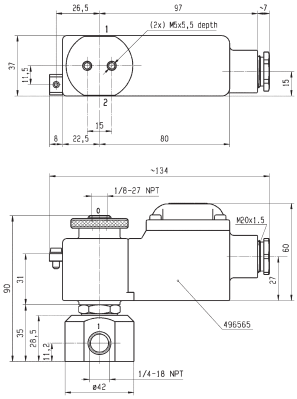



Drawing 8024

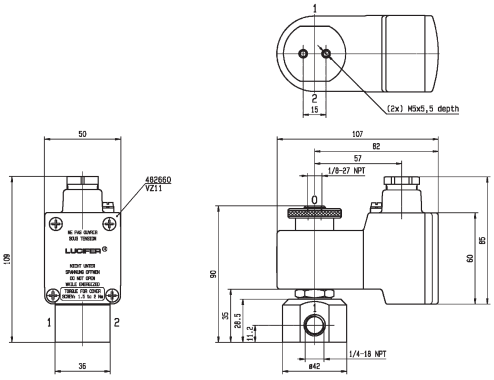

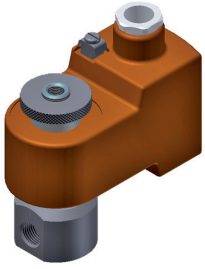

Drawing 6713

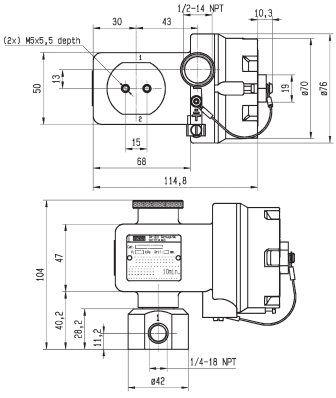



Drawing 8299

3/2 3 WAY VALVES DIRECT OPERATED

V SERIES - STAINLESS STEEL VALVES FOR PIPE MOUNTING

303 STAINLESS ST.
PIPE MOUNTING

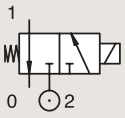

NORMALLY CLOSED

Port size	Orifice Ø	Flow factor			Operating Pressure Differential			Fluid Temp.		Seat Seal	Valve Ref.	Housing Ref.	Coil Ref.	ATEX Zone	Protection Mode	Power		Coil Group	Dwg. No.
					Min	Max(MOPD)		Min	Max										
BSP	mm	Kv l/min	KV m³/h	Qn l/min	bar	AC bar	DC bar	°C	°C							AC W	DC W		
	1	0.6	0.04	32	0	-	10	-10	55	FKM	131V5490	2995	483580.01	0-20	Ex ia IIC T6	-	0.5 to 3	6.0/7.0/8.0	6740
	1	0.6	0.04	32	0	-	10	-10	65	FKM	131V5490	-	495910	0-20	Ex ia IIC T4 to T6	-	0.3 to 3	6.0/7.0/8.0	8344
	1	0.6	0.04	32	0	-	10	-10	65	FKM	131V5490	-	495900	1-21	Ex db mb IIC T4 to T6	-	0.3 to 3	6.0/7.0/8.0	8344
	1.5	1.5	0.09	80	0	15	15	-10	65	FKM	131V5406	-	495905	1-21	Ex db mb IIC T4	8	8	2.1	8024
	1.5	1.5	0.09	80	0	15	15	-10	60	FKM	131V5406	2995	495870	2-22	Ex nc AC IIC T3/T4	8	9	2.1	8024
	1.5	1.5	0.09	80	0	15	15	-10	100	FKM	131V5406	2995	481865	-	-	8	9	2.1	8116
1/4"	1.5	1.5	0.09	80	0	15	15	-10	65	Ruby	131V5463 [1]	-	495905	1-21	Ex db mb IIC T4	8	8	2.1	8024
	1.5	1.5	0.09	80	0	15	15	-10	60	Ruby	131V5463 [1]	2995	495870	2-22	Ex nc AC IIC T3/T4	8	9	2.1	8024
	1.5	1.5	0.09	80	0	15	15	-10	100	Ruby	131V5463 [1]	2995	481865	-	-	8	9	2.1	8116
	1.5	1.5	0.09	80	0	-	7	-20	65	PUR	131V5497 [2]	-	495910	0-20	Ex ia IIC T4 to T6	-	0.3 to 3	3.0/6.0/8.0	8024
	1.5	1.5	0.09	80	0	7	7	-20	65	PUR	131V5497 [2]	-	495900	1-21	Ex db mb IIC T4 to T6	2.5	2	3.0/6.0/8.0	8024
	1.5	1.5	0.09	80	0	-	7	-20	50	PUR	131V5497 [2]	2995	496125	2-22	Ex nAC IIC T5/T6	-	1.6	3.0/6.0/8.0	8116
	1.5	1.5	0.09	80	0	-	7	-20	75	PUR	131V5497 [2]	2995	482740	-	-	-	1.6	3.0/6.0/8.0	8116

Notes:
1. Valve only compatible with hydraulic oil and neutral liquids
2.If media is water, max admissible fluid temperature is 40°C

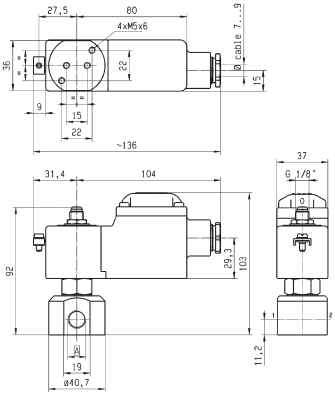



Drawing 8344

Parker Hannifin Corporation
Fluid Control Solutions Europe
Process Catalogue FCSE/1121/UK/V1.0

IECEx certified

For this page	Port size	Orifice (mm)	Kv (l/min)	MOPD (bar)	Fluid Temp (°C)	Amb Temp (°C)
From	1/4"	1	0.6	7	-20	-20
To	1/4"	1.5	1.5	15	100	50

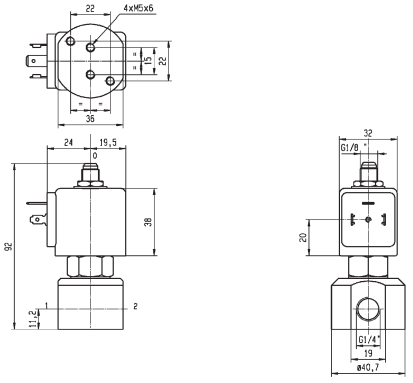



Drawing 6740

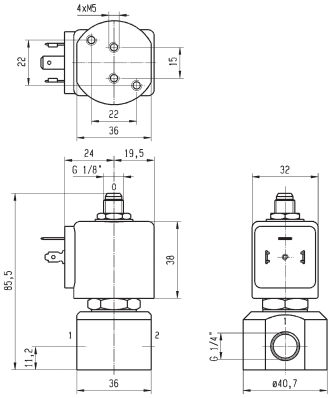



Drawing 8116

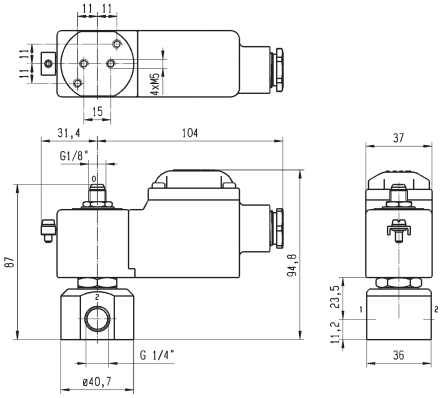



3/2 3 WAY VALVES DIRECT OPERATED

V SERIES - STAINLESS STEEL VALVES FOR PIPE MOUNTING

303 STAINLESS ST.
PIPE MOUNTING

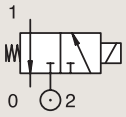

NORMALLY CLOSED

Port size	Orifice Ø	Flow factor			Operating Pressure Differential Min	Max(MOPD)		Fluid Temp. Min	Max	Seat Seal	Valve Ref.	Housing Ref.	Coil Ref.	ATEX Zone	Protection Mode	Power		Coil Group	Dwg. No.
BSP	mm	Kv l/min	KV m³/h	Qn l'min	bar	AC bar	DC bar	°C	°C							AC W	DC W		
1/4"	2.5	3.5	0.21	220	0	7	7	-10	65	FKM	131V5306	-	495905	1-21	Ex db mb IIC T4	8	8	2.1	8024
	2.5	3.5	0.21	220	0	7	7	-10	60	FKM	131V5306	2995	495870	2-22	Ex nc AC IIC T3/T4	8	9	2.1	8116
	2.5	3.5	0.21	220	0	7	7	-10	100	FKM	131V5306	2995	481865	-	-	8	9	2.1	8116
	2.5	3.5	0.21	220	0	7	7	-30	65	Ruby	131V5363 [1]	-	495905	1-21	Ex db mb IIC T4	8	8	2.0	8024
	2.5	3.5	0.21	220	0	7	7	-30	60	Ruby	131V5363 [1]	2995	495870	2-22	Ex nc AC IIC T3/T4	8	9	2.0	8116
	2.5	3.5	0.21	220	0	7	7	-30	100	Ruby	131V5363 [1]	2995	481865	-	-	8	9	2.0	8116
	2.5	3.5	0.21	220	0	7	7	-30	180	Ruby	131V5363 [1]	4270	486265	-	-	14	14	2.0	8116
	2.5	3	0.18	180	0	-	2	-20	65	PUR	131V5397 [2]	-	495910	0-20	Ex ia IIC T4 to T6	-	0.3 to 3	6.0/8.0	8024
	2.5	3	0.18	180	0	2	2	-20	65	PUR	131V5397 [2]	-	495900	1-21	Ex db mb IIC T4 to T6	2.5	2	6.0/8.0	8024
	2.5	3	0.18	180	0	-	2	-20	50	PUR	131V5397 [2]	2995	496125	2-22	Ex nAC IIC T5/T6	-	1.6	6.0/8.0	8116
	2.5	3	0.18	180	0	-	2	-20	75	PUR	131V5397 [2]	2995	482740	-	-	-	1.6	6.0/8.0	8116

Notes:
1. Valve only compatible with hydraulic oil and neutral liquids
2. If media is water, max admissible fluid temperature is 40°C

Tel: +45 63 12 83 00 | Email: ps@hymatik.com | www.hymatik.com | Hvidkaervej 27a, DK-5250 Odense SV, Denmark

IECEx certified

For this page	Port size	Orifice (mm)	Kv (l/min)	MOPD (bar)	Fluid Temp (°C)	Amb Temp (°C)
From	1/4"	2.5	3.0	2	-30	-20
To	1/4"	2.5	3.5	7	180	50

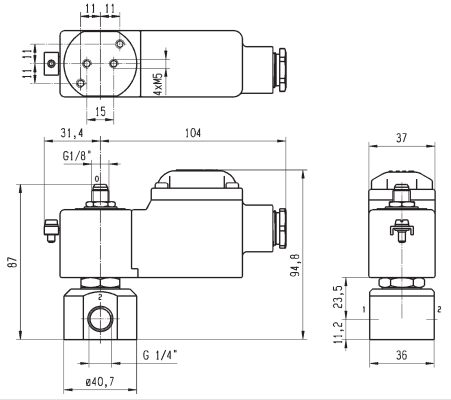



Drawing 8024

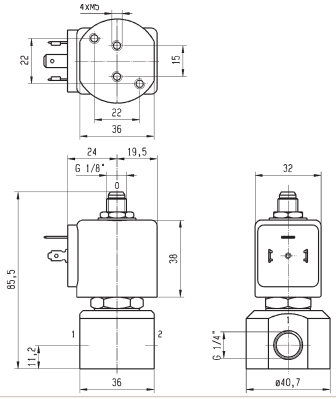



Drawing 8116

Parker Hannifin Corporation
Fluid Control Solutions Europe
Process Catalogue FCSE/1121UK/V1.0

3/2 3 WAY VALVES DIRECT OPERATED

V SERIES - STAINLESS STEEL VALVES FOR PIPE MOUNTING

303 STAINLESS ST.
PIPE MOUNTING

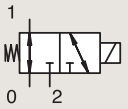

UNIVERSAL

Port size	Orifice Ø	Flow factor			Operating Pressure Differential			Fluid Temp.		Seat Seal	Valve Ref.	Housing Ref.	Coil Ref.	ATEX Zone	Protection Mode	Power		Coil Group	Dwg. No.
					Min			Min	Max										
BSP	mm	Kv l/min	KV m³/h	Qn l/min	bar	AC bar	DC bar	°C	°C							AC W	DC W		
1/4"	1.5	1.5	0.09	80	0	10	10	-10	65	FKM	133V5406	-	495905	1-21	Ex db mb IIC T4	8	8	2.1	8024
	1.5	1.5	0.09	80	0	10	10	-10	60	FKM	133V5406	2995	495870	2-22	Ex nc AC IIC T3/T4	8	9	2.1	8116
	1.5	1.5	0.09	80	0	10	10	-10	100	FKM	133V5406	2995	481865	-	-	8	9	2.1	8116
	1.5	1.5	0.09	80	0	10	10	-30	65	Ruby	133V5463 [1]	-	495905	1-21	Ex db mb IIC T4	8	8	2.0	8024
	1.5	1.5	0.09	80	0	4	4	-30	60	Ruby	133V5463 [1]	2995	495870	2-22	Ex nc AC IIC T3/T4	8	9	2.0	8116
	1.5	1.5	0.09	80	0	4	4	-30	100	Ruby	133V5463 [1]	2995	481865	-	-	8	9	2.0	8116
	2.5	3.5	0.21	220	0	4	4	-10	65	FKM	133V5306	-	495905	1-21	Ex db mb IIC T4	8	8	2.1	8024
	2.5	3.5	0.21	220	0	4	4	-10	60	FKM	133V5306	2995	495870	2-22	Ex nc AC IIC T3/T4	8	9	2.1	8116
	2.5	3.5	0.21	220	0	4	4	-10	100	FKM	133V5306	2995	481865	-	-	8	9	2.1	8116
	2.5	3.5	0.21	220	0	4	4	-30	65	Ruby	133V5363 [1]	-	495905	1-21	Ex db mb IIC T4	8	8	2.0	8024
	2.5	3.5	0.21	220	0	4	4	-30	60	Ruby	133V5363 [1]	2995	495870	2-22	Ex nc AC IIC T3/T4	8	9	2.0	8116
	2.5	3.5	0.21	220	0	4	4	-30	100	Ruby	133V5363 [1]	2995	481865	-	-	8	9	2.0	8116

Notes:
1. Valve only compatible with hydraulic oil and neutral liquids

Tel: +45 63 12 83 00 | Email: ps@hymatik.com | www.hymatik.com | Hvidkaervej 27a, DK-5250 Odense SV, Denmark

IECEx certified

For this page	Port size	Orifice (mm)	Kv (l/min)	MOPD (bar)	Fluid Temp (°C)	Amb Temp (°C)
From	1/4"	1.5	1.5	4	-30	-10
To	1/4"	2.5	3.5	10	100	50

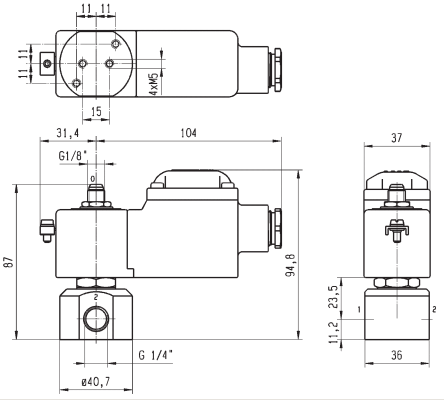



Drawing 8024

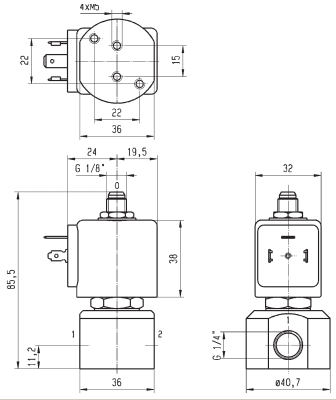



Drawing 8116

Tel: +45 63 12 83 00 | Email: ps@hymatik.com | www.hymatik.com | Hvidkaervej 27a, DK-5250 Odense SV, Denmark



3 WAY VALVES DIRECT OPERATED

X SERIES - BRASS, ALUMINIUM, STAINLESS STEEL VALVES FOR PIPE MOUNTING



3/2

Actuation	Body	Function	Port Size	Orifice (mm)	Flow Factor Qn(l/min)	MOPD (bar)	Max Fluid Temp. (°C)	Page
Direct Operated	Brass/Pipe Mounting	Universal	1/4"	6	680	12	75	98
	316L Stainless St./Pipe Mounting	Universal	1/4"	6	680	12	75	100
			3/8"	6	680	12	65	102
	316L Stainless St./Sub-base Mounting	Universal	1/4"	6	680	12	75	106
	Anodized Aluminium/Pipe Mounting	Universal	1/4"	6	680	12	75	108

3/2 3 WAY VALVES DIRECT OPERATED

X SERIES - BRASS, ALUMINIUM, STAINLESS STEEL VALVES FOR PIPE MOUNTING

BRASS
PIPE MOUNTING
UNIVERSAL

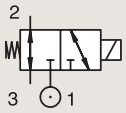

Port size	Orifice Ø	Flow factor	Operating Pressure Differential			Fluid Temp.		Seat Seal	Valve Ref.	Housing Ref.	Coil Ref.	ATEX Zone	Protection Mode	Power		Coil Group	Dwg. No.
			Min	Max(MOPD)		Min	Max										
	mm	Qn l/min	bar	AC bar	DC bar	°C	°C							AC W	DC W		
1/4" NPT	6	680	0	-	12	-25	65	NBR	U133X0111	-	496565	0-20	Ex ia IIB/IIC T4 to T6	-	0.3	9.0/10.1/10.2	8280
	6	680	0	12	12	-25	65	NBR	U133X0111	-	492310	1-21	Ex mb II T4 to T5	6	6	9.0/10.1/10.2	7422
	6	680	0	12	12	-25	65	NBR	U133X0111	-	496555	1-21	Ex db mb IIC T4 to T6	6	6	9.0/10.1/10.2	8280
	6	680	0	12	12	-25	65	NBR	U133X0111	-	496700	1-21	Ex db mb IIC T4 to T6	6	6	9.0/10.1/10.2	8280
	6	680	0	-	12	-25	65	NBR	U133X0111	-	492210	1-21	Ex eb mb IIC T5 to T6	-	1 to 1.8	9.0/10.1/10.2	7422
	6	680	0	12	12	-25	50	NBR	U133X0111	-	496895	-	-	8	8	9.0/10.1/10.2	8280

IECEx certified

For this page	Port size	Orifice (mm)	Qn (l/min)	MOPD (bar)	Fluid Temp (°C)	Amb Temp (°C)
From	1/4"	6	680	12	-25	-25
To	1/4"	6	680	12	65	65

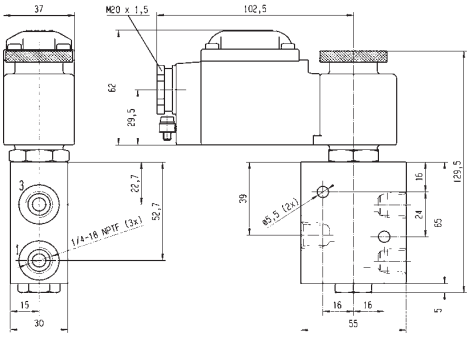



Drawing 8280

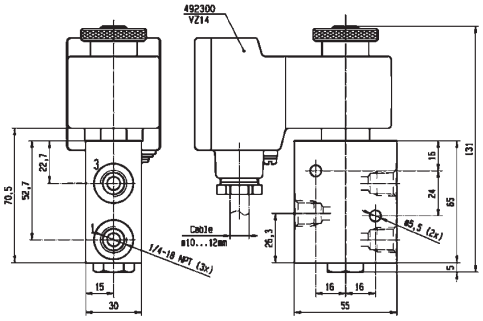

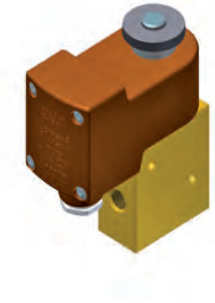

Drawing 7422

Parker Hannifin Corporation
Fluid Control Solutions Europe
Process Catalogue FCSE/1121/UK/V1.0

3/2 3 WAY VALVES DIRECT OPERATED

X SERIES - BRASS, ALUMINIUM, STAINLESS STEEL VALVES FOR PIPE MOUNTING

316L STAINLESS ST.
PIPE MOUNTING
UNIVERSAL

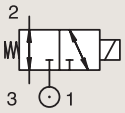

Port size	Orifice Ø	Flow factor	Operating Pressure Differential			Fluid Temp.		Seat Seal	Valve Ref.	Housing Ref.	Coil Ref.	ATEX Zone	Protection Mode	Power		Coil Group	Dwg. No.
			Min	Max(MOPD)		Min	Max										
	mm	Qn l'/min	bar	AC bar	DC bar	°C	°C							AC W	DC W		
1/4" NPTF	6	680	0	-	12	-25	65	NBR	U133X5156 12	-	496565	0-20	Ex ia IIB/IIC T4 to T6	-	0.3	9.0/10.1/10.2	8168
	6	680	0	-	12	-25	65	NBR	U133X5156 12	-	492210	1-21	Ex eb mb IIC T5 to T6	-	1 to 1.8	9.0/10.1/10.2	7770
	6	680	0	12	12	-25	65	NBR	U133X5156 12	-	492310	1-21	Ex mb II T4 to T5	6	6	9.0/10.1/10.2	7770
	6	680	0	12	12	-25	65	NBR	U133X5156 12	-	496700	1-21	Ex db mb IIC T4 to T6	6	6	9.0/10.1/10.2	8168
	6	680	0	12	12	-25	65	NBR	U133X5156 12	-	496555	1-21	Ex db mb IIC T4 to T6	6	6	9.0/10.1/10.2	8168
	6	680	0	12	12	-25	50	NBR	U133X5156 12	-	496895	-	-	8	8	9.0/10.1/10.2	8168
	6	680	0	-	12	-25	65	NBR	U133X5196 2	-	496565	0-20	Ex ia IIB/IIC T4 to T6	-	0.3	9.0/10.1/10.2	8169
	6	680	0	-	12	-25	65	NBR	U133X5196 2	-	492210	1-21	Ex eb mb IIC T5 to T6	-	1 to 1.8	9.0/10.1/10.2	8169
	6	680	0	12	12	-25	65	NBR	U133X5196 2	-	492310	1-21	Ex mb II T4 to T5	6	6	9.0/10.1/10.2	8169
	6	680	0	12	12	-25	65	NBR	U133X5196 2	-	496555	1-21	Ex db mb IIC T4 to T6	6	6	9.0/10.1/10.2	8169
	6	680	0	12	12	-25	65	NBR	U133X5196 2	-	496700	1-21	Ex db mb IIC T4 to T6	6	6	9.0/10.1/10.2	8169
	6	680	0	12	12	-25	50	NBR	U133X5196 2	-	496895	-	-	8	8	9.0/10.1/10.2	8169

Notes:
1. With manual override
2. Valve delivered with an individual material traceability certificate (3.1 following EN10204)

Tel: +45 63 12 83 00 | Email: ps@hymatik.com | www.hymatik.com | Hvidkaervej 27a, DK-5250 Odense SV, Denmark

IECEx certified

For this page	Port size	Orifice (mm)	Qn (l/min)	MOPD (bar)	Fluid Temp (°C)	Amb Temp (°C)
From	1/4"	6	680	12	-25	-25
To	1/4"	6	680	12	65	65

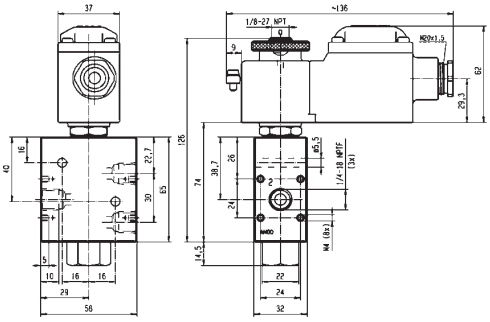



Drawing 8168

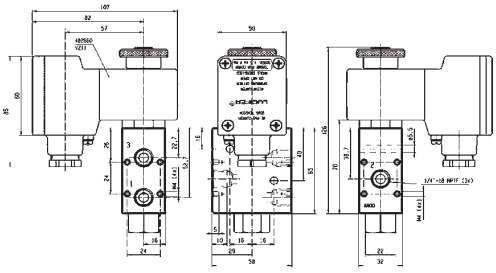

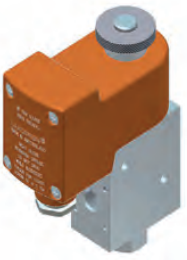

Drawing 7770

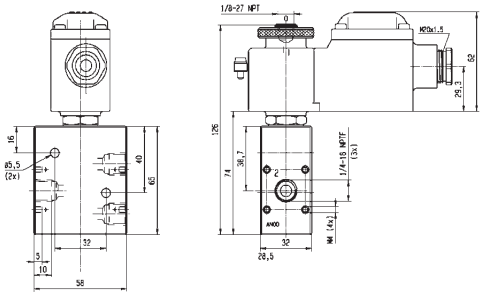



Drawing 8169

3/2 3 WAY VALVES DIRECT OPERATED

X SERIES - BRASS, ALUMINIUM, STAINLESS STEEL VALVES FOR PIPE MOUNTING

316L STAINLESS ST. PIPE MOUNTING

UNIVERSAL

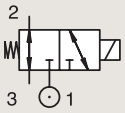

Port size	Orifice Ø	Flow factor	Operating Pressure Differential Min	Max(MOPD)		Fluid Temp. Min	Max	Seat Seal	Valve Ref.		Coil Ref.	ATEX Zone	Protection Mode	Power		Coil Group	Dwg. No.
BSP	mm	Qn l'/min	bar	AC bar	DC bar	°C	°C							AC W	DC W		
1/4" NPTF	6	680	0	12	12	-40	65	VMQ	U133X7759$_{1-2}$	-	496895	-	-	8	8	9.0;10.1;10.2;10.3	8544
	6	680	0	-	12	-40	65	VMQ	U133X7759$_{1-2}$	-	496565	-	0-20 EX ia IIB/IIC T4 to T6	-	0.3	9.0;10.1;10.2;10.3	8539
	6	680	0	12	12	-40	65	VMQ	U133X7759$_{1-2}$	-	497105	-	1-21 Ex db IIC T4 to T6	8	8	9.0;10.1;10.2;10.3	8537
	6	680	0	12	12	-40	65	VMQ	U133X7759$_{1-2}$	-	496700	-	1-21 Ex db mb IIC T4 to T6	6	6	9.0;10.1;10.2;10.3	8545
	6	680	0	12	12	-40	65	VMQ	U133X7759$_{1-2}$	-	492310	-	1-21 Ex db II T4 to T5	9	8	9.0;10.1;10.2;10.3	8548
	6	680	0	-	12	-40	65	VMQ	U133X7759$_{1-2}$	-	492210	-	1-21Ex eb mb IIC T5 to T6	-	1.8	9.0;10.1;10.2;10.3	8548
	6	680	0	12	12	-40	65	VMQ	U133X7709$_{2}$	-	496895	-	-	8	8	9.0;10.1;10.2;10.3	8551
	6	680	0	-	12	-40	65	VMQ	U133X7709$_{2}$	-	496565	-	0-20 Ex ia IIB/IIC T4 to T6	-	0.3	9.0;10.1;10.2;10.3	8550
	6	680	0	12	12	-40	65	VMQ	U133X7709$_{2}$	-	497105	-	1-21 Ex db IIC T4 to T6			9.0;10.1;10.2;10.3	8537
	6	680	0	12	12	-40	65	VMQ	U133X7709$_{2}$	-	496700	-	1-21 Ex db mb IIC T4 to T6			9.0;10.1;10.2;10.3	8545
	6	680	0	12	12	-40	65	VMQ	U133X7709$_{2}$	-	492310	-	1-21 Ex mb II T4 to T5			9.0;10.1;10.2;10.3	8548
	6	680	0	-	12	-40	65	VMQ	U133X7709$_{2}$	-	492210	-	1-21 Ex eb mb IIC T5 to T6			9.0;10.1;10.2;10.3	8548
3/8" NPTF	6	680	0	-	12	-25	65	NBR	U133X5296$_{2}$	-	496565	0-20	Ex ia IIB/IIC T4 to T6	-	0.3	9.0/10.1/10.2	8169
	6	680	0	12	12	-25	65	NBR	U133X5296$_{2}$	-	492310	1-21	Ex mb II T4 to T5	6	6	9.0/10.1/10.2	7669
	6	680	0	12	12	-25	65	NBR	U133X5296$_{2}$	-	496700	1-21	Ex db mb IIC T4 to T6	6	6	9.0/10.1/10.2	8169
	6	680	0	-	12	-25	65	NBR	U133X5296$_{2}$	-	492210	1-21	Ex eb mb IIC T5 to T6	-	1 to 1.8	9.0/10.1/10.2	7669
	6	680	0	12	12	-25	65	NBR	U133X5296$_{2}$	-	496555	1-21	Ex db mb IIC T4 to T6	6	6	9.0/10.1/10.2	8169
	6	680	0	12	12	-25	50	NBR	U133X5296$_{2}$	-	496895	-	-	8	8	9.0/10.1/10.2	8169

Notes:
1. With manual override
2. Valve delivered with an individual material traceability certificate (3.1 following EN10204)

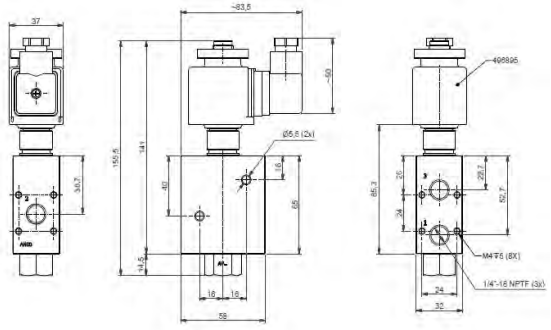



Drawing 8544

Parker Hannifin Corporation
Fluid Control Solutions Europe
Process Catalogue FCSE/1121/UK/V1.0

IECEx certified

For this page	Port size	Orifice (mm)	Qn (l/min)	MOPD (bar)	Fluid Temp (°C)	Amb Temp (°C)
From	1/4"	6	680	12	-40	-25
To	3/8"	6	680	12	65	65

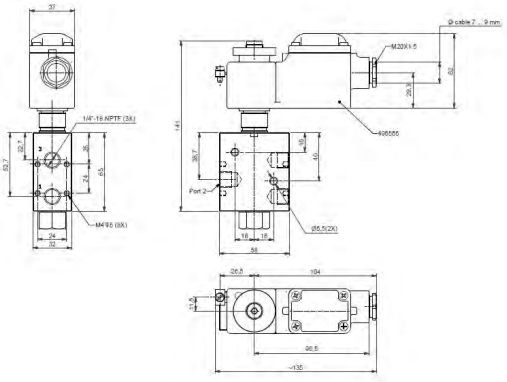



Drawing 8539

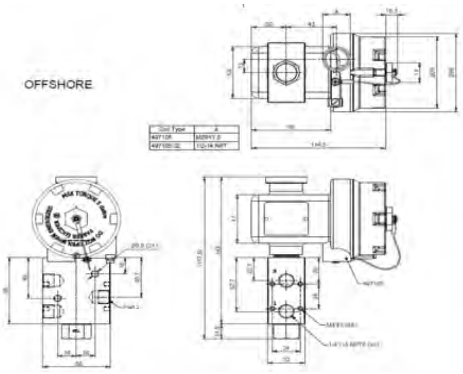



Drawing 8537

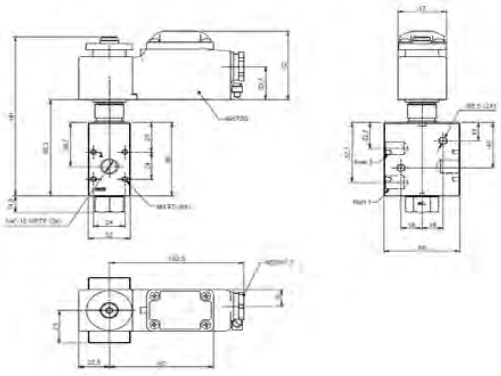



Drawing 8545

Parker Hannifin Corporation
Fluid Control Solutions Europe
Process Catalogue FCSE/1121/UK/V1.0

3/2 3 WAY VALVES DIRECT OPERATED

X SERIES - BRASS, ALUMINIUM, STAINLESS STEEL VALVES FOR PIPE MOUNTING

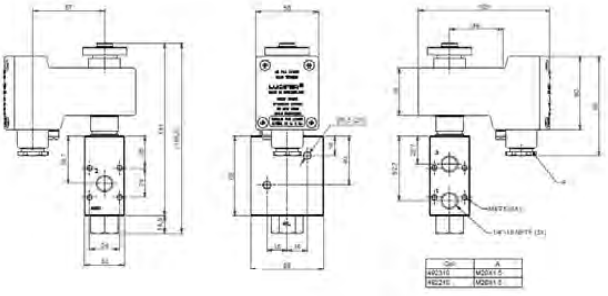



Drawing 8546

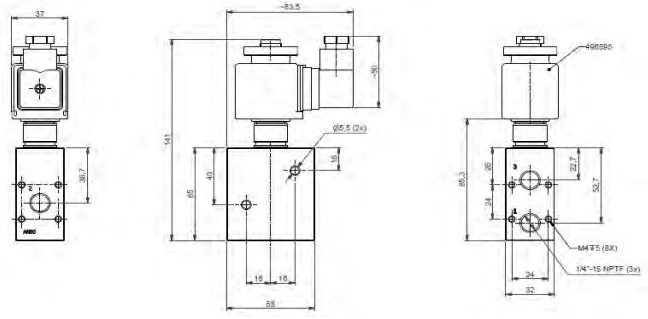



Drawing 8551

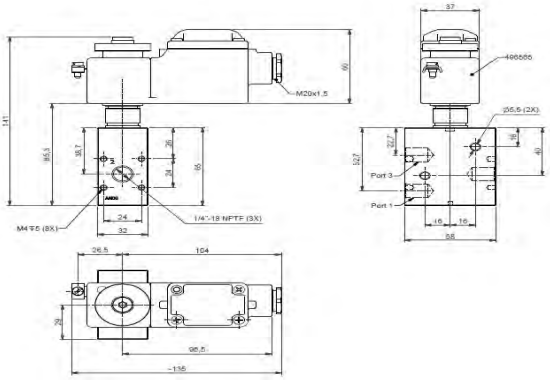



Drawing 8550

Parker Hannifin Corporation
Fluid Control Solutions Europe
Process Catalogue FCSE/1121/UK/V1.0

For this page	Port size	Orifice (mm)	Qn (l/min)	MOPD (bar)	Fluid Temp (°C)	Amb Temp (°C)
From	1/4"	6	680	12	-40	-25
To	3/8"	6	680	12	65	65

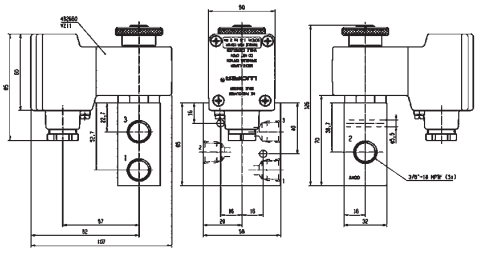



Drawing 7669

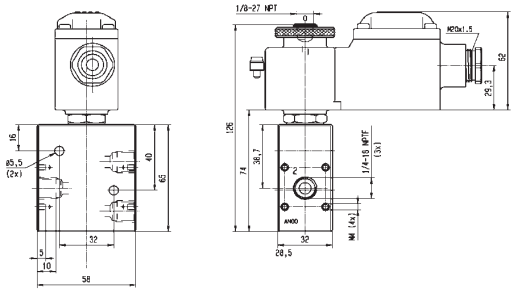



Drawing 8169

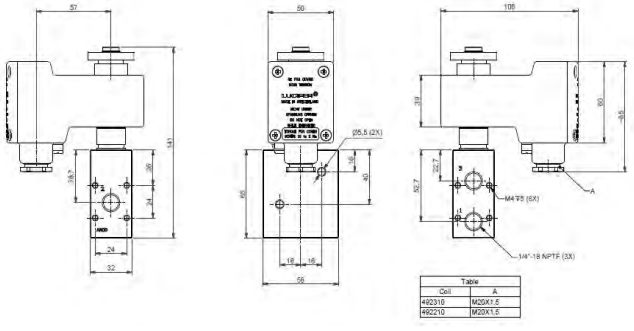



Drawing 8548

Parker Hannifin Corporation
Fluid Control Solutions Europe
Process Catalogue FCSE/1121/UK/V1.0

3/2 3 WAY VALVES DIRECT OPERATED

X SERIES - BRASS, ALUMINIUM, STAINLESS STEEL VALVES FOR PIPE MOUNTING

316L STAINLESS ST. SUB-BASE MOUNTING

UNIVERSAL

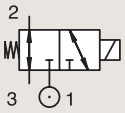

Port size	Orifice Ø	Flow factor	Operating Pressure Differential Min	Operating Pressure Differential Max(MOPD)		Fluid Temp. Min	Fluid Temp. Max	Seat Seal	Valve Ref.	Housing Ref.	Coil Ref.	ATEX Zone	Protection Mode	Power		Coil Group	Dwg. No.
BSP	mm	Qn l/min	bar	AC bar	DC bar	°C	°C	FKM						AC W	DC W		
1/4" NPTF	6	680	0	-	12	-25	65	FKM	U133X5195 [1]	-	496565	0-20	Ex ia IIB/IIC T4 to T6	-	0.3	9.0/10.1/10.2	8172
	6	680	0	12	12	-25	65	FKM	U133X5195 [1]	-	492310	1-21	Ex mb II T4 to T5	6	6	9.0/10.1/10.2	3572
	6	680	0	12	12	-25	65	FKM	U133X5195 [1]	-	496700	1-21	Ex db mb IIC T4 to T6	6	6	9.0/10.1/10.2	8172
	6	680	0	-	12	-25	65	FKM	U133X5195 [1]	-	492210	1-21	Ex eb mb IIC T5 to T6	-	1 to 1.8	9.0/10.1/10.2	3572
	6	680	0	12	12	-25	65	FKM	U133X5195 [1]	-	496555	1-21	Ex db mb IIC T4 to T6	6	6	9.0/10.1/10.2	8172
	6	680	0	12	12	-25	50	FKM	U133X5195 [1]	-	496895	-	-	8	8	9.0/10.1/10.2	8172

Notes:
1. Valve delivered with an individual material traceability certificate (3.1 following EN10204)

Tel: +45 63 12 83 00 | Email: ps@hymatik.com | www.hymatik.com | Hvidkaervej 27a, DK-5250 Odense SV, Denmark

IECEx certified

For this page	Port size	Orifice (mm)	Qn (l/min)	MOPD (bar)	Fluid Temp (°C)	Amb Temp (°C)
From	1/4"	6	680	12	-25	-25
To	1/4"	6	680	12	65	65

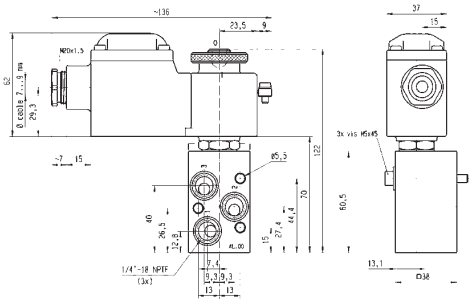



Drawing 8172

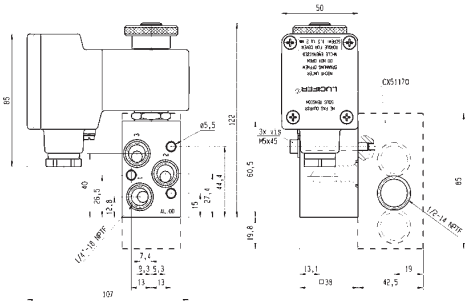

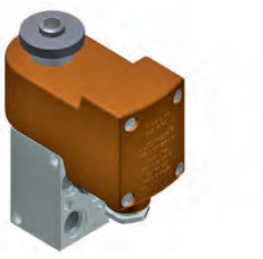

Drawing 3572

Tel: +45 63 12 83 00 | Email: ps@hymatik.com | www.hymatik.com | Hvidkaervej 27a, DK-5250 Odense SV, Denmark

3/2 3 WAY VALVES DIRECT OPERATED

X SERIES - BRASS, ALUMINIUM, STAINLESS STEEL VALVES FOR PIPE MOUNTING

ANODIZED ALUMINIUM PIPE MOUNTING

UNIVERSAL

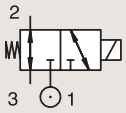

Port size	Orifice Ø	Flow factor	Operating Pressure Differential Min	Operating Pressure Differential Max(MOPD)		Fluid Temp. Min	Fluid Temp. Max	Seat Seal	Valve Ref.	Housing Ref.	Coil Ref.	ATEX Zone	Protection Mode	Power		Coil Group	Dwg. No.
BSP	mm	Qn l/min	bar	AC bar	DC bar	°C	°C							AC W	DC W		
1/4"	6	680	0	-	12	-25	65	NBR	133X01	-	496565	0-20	Ex ia IIB/IIC T4 to T6	-	0.3	9.0/10.1/10.2	8280
	6	680	0	12	12	-25	75	NBR	133X01	-	492310	1-21	Ex mb II T4 to T5	6	6	9.0/10.1/10.2	6960
	6	680	0	12	12	-25	65	NBR	133X01	-	496555	1-21	Ex db mb IIC T4 to T6	6	6	9.0/10.1/10.2	8280
	6	680	0	12	12	-25	65	NBR	133X01	-	496700	1-21	Ex db mb IIC T4 to T6	6	6	9.0/10.1/10.2	8280
	6	680	0	-	12	-25	65	NBR	133X01	-	492210	1-21	Ex eb mb IIC T5 to T6	-	1 to 1.8	9.0/10.1/10.2	6960
	6	680	0	12	12	-25	50	NBR	133X01	-	496895	-	-	8	8	9.0/10.1/10.2	8280
1/4" NPT	6	680	0	-	12	-25	65	NBR	U133X01	-	496565	0-20	Ex ia IIB/IIC T4 to T6	-	0.3	9.0/10.1/10.2	8280
	6	680	0	12	12	-25	65	NBR	U133X01	-	496700	1-21	Ex db mb IIC T4 to T6	6	6	9.0/10.1/10.2	8280
	6	680	0	-	12	-25	65	NBR	U133X01	-	492210	1-21	Ex eb mb IIC T5 to T6	-	1 to 1.8	9.0/10.1/10.2	6960
	6	680	0	12	12	-25	65	NBR	U133X01	-	492310	1-21	Ex mb II T4 to T5	6	6	9.0/10.1/10.2	6960
	6	680	0	12	12	-25	65	NBR	U133X01	-	496555	1-21	Ex db mb IIC T4 to T6	6	6	9.0/10.1/10.2	8280
	6	680	0	12	12	-25	50	NBR	U133X01	-	496895	-	-	8	8	9.0/10.1/10.2	8280

Tel: +45 63 12 83 00 | Email: ps@hymatik.com | www.hymatik.com | Hvidkaervej 27a, DK-5250 Odense SV, Denmark

IECEx certified

For this page	Port size	Orifice (mm)	Qn (l/min)	MOPD (bar)	Fluid Temp (°C)	Amb Temp (°C)
From	1/4"	6	680	12	-25	-25
To	1/4"	6	680	12	75	65

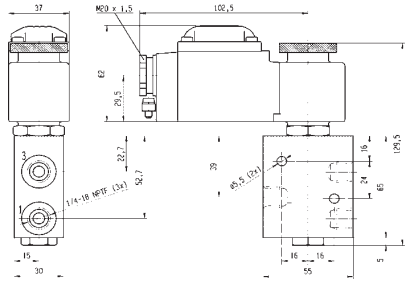



Drawing 8280

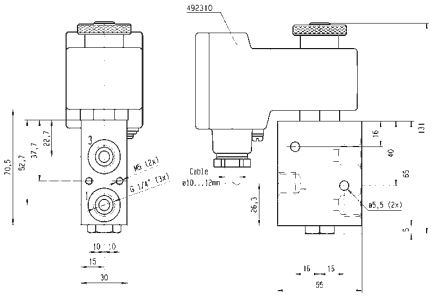

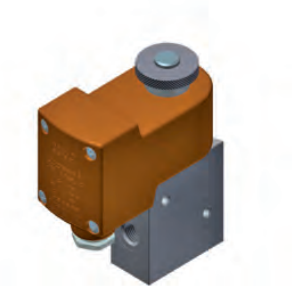

Drawing 6960

Parker Hannifin Corporation
Fluid Control Solutions Europe
Process Catalogue FCSE/1121/UK/V1.0

Tel: +45 63 12 83 00 | Email: ps@hymatik.com | www.hymatik.com | Hvidkaervej 27a, DK-5250 Odense SV, Denmark



3 WAY VALVES DIRECT OPERATED

X SERIES MANUAL RESET - BRASS, STAINLESS STEEL VALVES FOR PIPE MOUNTING



3/2

Actuation	Body	Function	Port Size	Orifice (mm)	Flow Factor Qn(l/min)	MOPD (bar)	Max Fluid Temp. (°C)	Page
Manual Reset	Brass/Pipe Mounting	Universal	1/4"	6	680	12	65	112
	316L Stainless St./Pipe Mounting	Universal	1/4"	6	680	12	65	112
			3/8"	6	680	12	65	114

3/2 3 WAY VALVES DIRECT OPERATED

X SERIES MANUAL RESET - BRASS, STAINLESS STEEL VALVES FOR PIPE MOUNTING

BRASS PIPE MOUNTING

UNIVERSAL- MANUAL RESET

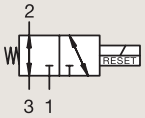

Port size	Orifice Ø mm	Flow factor Qn l'/min	Operating Pressure Differential Min bar	Max(MOPD) AC bar	Max(MOPD) DC bar	Fluid Temp. Min °C	Fluid Temp. Max °C	Seat Seal	Valve Ref.	Housing Ref.	Coil Ref.	ATEX Zone	Protection Mode	Power AC W	Power DC W	Coil Group	Dwg. No.
1/4" NPT	6	680	0	-	12	-25	65	NBR	U033X0111	-	496565	0-20	Ex ia IIB/IIC T4 to T6	-	0.3	9.0/10.1/10.2/12.0	8347
	6	680	0	12	12	-25	65	NBR	U033X0111	-	492310	1-21	Ex mb II T4 to T5	6	6	9.0/10.1/10.2/12.0	8347
	6	680	0	12	12	-25	65	NBR	U033X0111	-	496700	1-21	Ex db mb IIC T4 to T6	6	6	9.0/10.1/10.2/12.0	8347
	6	680	0	-	12	-25	65	NBR	U033X0111	-	492210	1-21	Ex eb mb IIC T5 to T6	-	1 to 1.8	9.0/10.1/10.2/12.0	8347
	6	680	0	12	12	-25	65	NBR	U033X0111	-	496555	1-21	Ex db mb IIC T4 to T6	6	6	9.0/10.1/10.2/12.0	8347
	6	680	0	12	12	-25	65	NBR	U033X0111	-	496895	-	-	8	8	9.0/10.1/10.2/12.0	8347

316L STAINLESS ST. PIPE MOUNTING

UNIVERSAL- MANUAL RESET

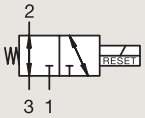

Port size	Orifice Ø mm	Flow factor Qn l'/min	Operating Pressure Differential Min bar	Max(MOPD) AC bar	Max(MOPD) DC bar	Fluid Temp. Min °C	Fluid Temp. Max °C	Seat Seal	Valve Ref.	Housing Ref.	Coil Ref.	ATEX Zone	Protection Mode	Power AC W	Power DC W	Coil Group	Dwg. No.
1/4" NPT	6	680	0	12	12	-25	65	NBR	U033X5156 [1]	-	492310	1-21	Ex mb II T4 to T5	6	6	10.1/10.2/12.0	7029
	6	680	0	12	12	-25	65	NBR	U033X5156 [1]	-	496700	1-21	Ex db mb IIC T4 to T6	6	6	10.1/10.2/12.0	8168
	6	680	0	12	12	-25	65	NBR	U033X5156 [1]	-	496555	1-21	Ex db mb IIC T4 to T6	6	6	10.1/10.2/12.0	8168
	6	680	0	12	12	-25	65	NBR	U033X5156 [1]	-	496895	-	-	8	8	10.1/10.2/12.0	8168

Notes:
1. Valve delivered with an individual material traceability certificate (3.1 following EN10204)

Tel: +45 63 12 83 00 | Email: ps@hymatik.com | www.hymatik.com | Hvidkaervej 27a, DK-5250 Odense SV, Denmark

IECEx certified

For this page	Port size	Orifice (mm)	Qn (l/min)	MOPD (bar)	Fluid Temp (°C)	Amb Temp (°C)
From	1/4"	6	680	12	-25	-25
To	1/4"	6	680	12	65	65

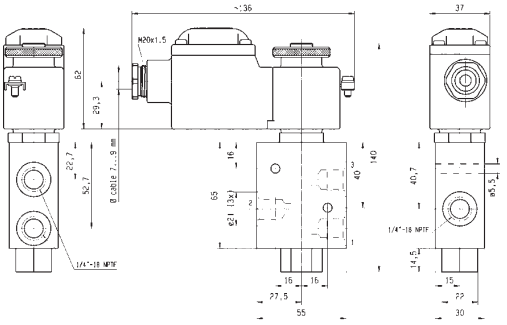

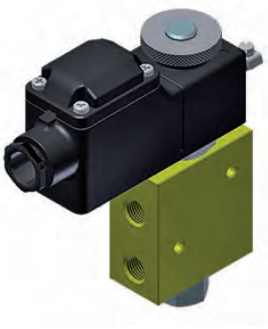

Drawing 8347

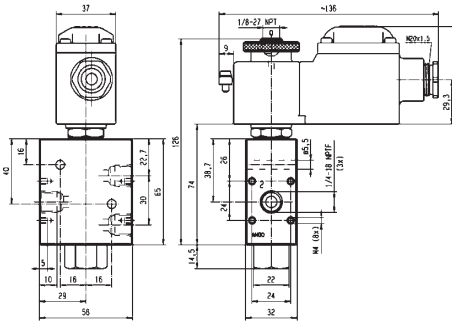



Drawing 8168

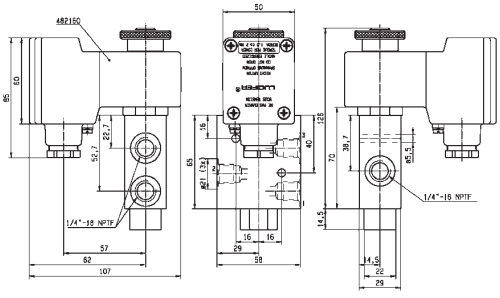

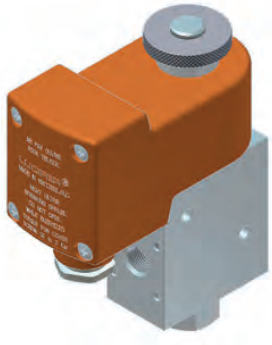

Drawing 7029

Parker Hannifin Corporation
Fluid Control Solutions Europe
Process Catalogue FCSE/1121/UK/V1.0

3/2 3 WAY VALVES DIRECT OPERATED

X SERIES MANUAL RESET - BRASS, STAINLESS STEEL VALVES FOR PIPE MOUNTING

316L STAINLESS ST. PIPE MOUNTING

UNIVERSAL - MANUAL RESET

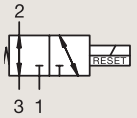

Port size	Orifice Ø	Flow factor	Operating Pressure Differential Min	Operating Pressure Differential Max(MOPD) AC	Operating Pressure Differential Max(MOPD) DC	Fluid Temp. Min	Fluid Temp. Max	Seat Seal	Valve Ref.	Housing Ref.	Coil Ref.	ATEX Zone	Protection Mode	Power AC	Power DC	Coil Group	Dwg. No.
	mm	Qn l/min	bar	bar	bar	°C	°C							W	W		
1/4" NPTF	6	560	0	-	12	-25	65	NBR	U033X5195 [1]	-	496565	0-20	Ex ia IIB/IIC T4 to T6	-	0.3	9.0/10.1/10.2/12.0	8348
	6	560	0	12	12	-25	65	NBR	U033X5195 [1]	-	492310	1-21	Ex mb II T4 to T5	6	6	9.0/10.1/10.2/12.0	8348
	6	560	0	12	12	-25	65	NBR	U033X5195 [1]	-	496700	1-21	Ex db mb IIC T4 to T6	6	6	9.0/10.1/10.2/12.0	8348
	6	560	0	-	12	-25	65	NBR	U033X5195 [1]	-	492210	1-21	Ex eb mb IIC T5 to T6	-	1 to 1.8	9.0/10.1/10.2/12.0	8348
	6	560	0	12	12	-25	65	NBR	U033X5195 [1]	-	496555	1-21	Ex db mb IIC T4 to T6	6	6	9.0/10.1/10.2/12.0	8348
	6	560	0	12	12	-25	65	NBR	U033X5195 [1]	-	496895	-	-	8	8	9.0/10.1/10.2/12.0	8348
	6	680	0	12	12	-40	65	VMQ	U033X7759 [1]	-	496895	-	-	8	8	9.0/10.1/10.2/10.3	8544
	6	680	0	12	12	-40	65	VMQ	U033X7759 [1]	-	497105	1-21	Ex db mb IIC T4 to T6	8	8	9.0/10.1/10.2/10.3	8537
	6	680	0	12	12	-40	65	VMQ	U033X7759 [1]	-	496700	1-21	Ex db mb IIC T4 to T6	6	6	9.0/10.1/10.2/10.3	8545
	6	680	0	12	12	-40	65	VMQ	U033X7759 [1]	-	492310	1-21	Ex mb II T4 to T5	9	8	9.0/10.1/10.2/10.3	8546
3/8" NPTF	6	680	0	-	12	-25	65	NBR	U033X5256 [1]	-	496565	0-20	Ex ia IIB/IIC T4 to T6	-	0.3	9.0/10.1/10.2/12.0	8349
	6	680	0	12	12	-25	65	NBR	U033X5256 [1]	-	492310	1-21	Ex mb II T4 to T5	6	6	9.0/10.1/10.2/12.0	8349
	6	680	0	12	12	-25	65	NBR	U033X5256 [1]	-	496700	1-21	Ex db mb IIC T4 to T6	6	6	9.0/10.1/10.2/12.0	8349
	6	680	0	-	12	-25	65	NBR	U033X5256 [1]	-	492210	1-21	Ex eb mb IIC T5 to T6	-	1 to 1.8	9.0/10.1/10.2/12.0	8349
	6	680	0	12	12	-25	65	NBR	U033X5256 [1]	-	496555	1-21	Ex db mb IIC T4 to T6	6	6	9.0/10.1/10.2/12.0	8349
	6	680	0	12	12	-25	65	NBR	U033X5256 [1]	-	496895	-	-	8	8	9.0/10.1/10.2/12.0	8349

Notes:
1. Valve delivered with an individual material traceability certificate (3.1 following EN10204)

Tel: +45 63 12 83 00 | Email: ps@hymatik.com | www.hymatik.com | Hvidkaervej 27a, DK-5250 Odense SV, Denmark

IECEx certified

For this page	Port size	Orifice (mm)	Qn (l/min)	MOPD (bar)	Fluid Temp (°C)	Amb Temp (°C)
From	1/4"	6	560	12	-25	-25
To	3/8"	6	680	12	65	65

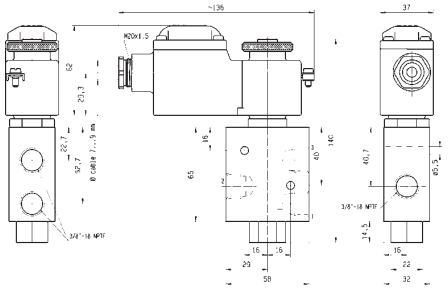

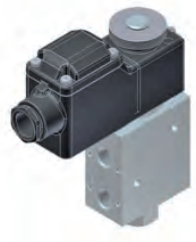

Drawing 8349

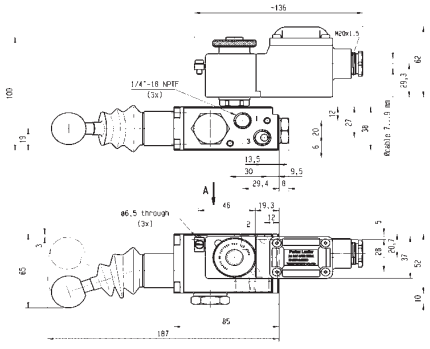



Drawing 8348

Parker Hannifin Corporation
Fluid Control Solutions Europe
Process Catalogue FCSE/1121/UK/V1.0

Tel: +45 63 12 83 00 | Email: ps@hymatik.com | www.hymatik.com | Hvidkaervej 27a, DK-5250 Odense SV, Denmark

3/2 3 WAY VALVES DIRECT OPERATED

X SERIES MANUAL RESET - BRASS, STAINLESS STEEL VALVES FOR PIPE MOUNTING

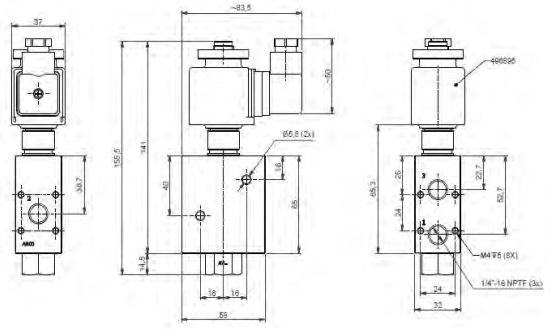



Drawing 8544

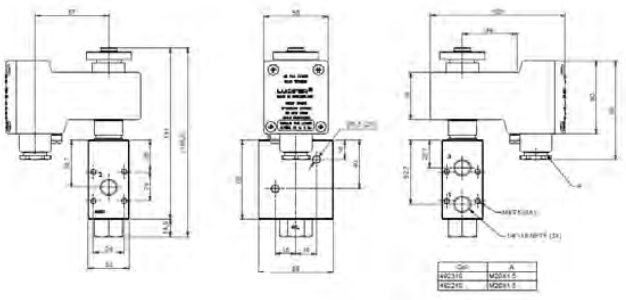

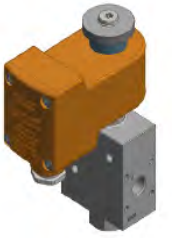

Drawing 8546

Parker Hannifin Corporation
Fluid Control Solutions Europe
Process Catalogue FCSE/1121/UK/V1.0

IECEx certified

For this page	Port size	Orifice (mm)	Qn (l/min)	MOPD (bar)	Fluid Temp (°C)	Amb Temp (°C)
From	1/4"	6	560	12	-25	-25
To	3/8"	6	680	12	65	65

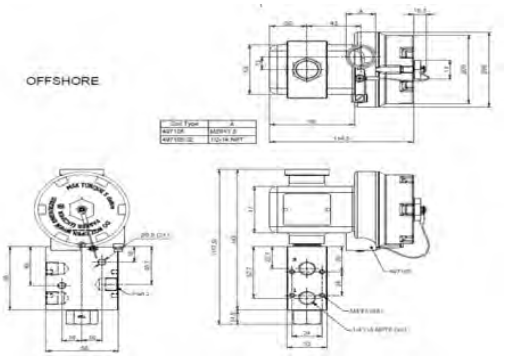

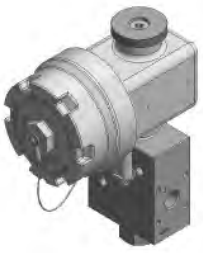

Drawing 8537

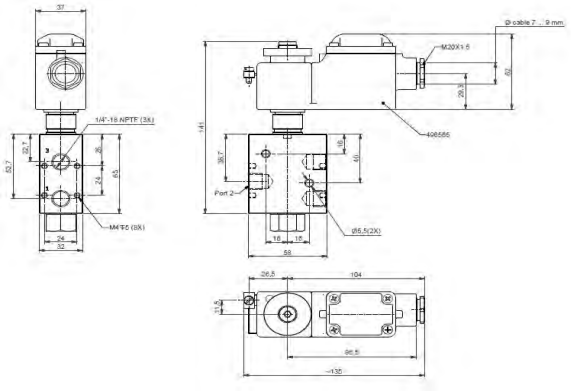



Drawing 8545

Tel: +45 63 12 83 00 | Email: ps@hymatik.com | www.hymatik.com | Hvidkaervej 27a, DK-5250 Odense SV, Denmark



DIRECT OPERATED SOLENOID VALVE

LOW POWER A03 SERIES MANUAL RESET, STAINLESS STEEL VALVES FOR PIPE MOUNTING

3/2

Actuation	Body	Function	Port Size	Orifice (mm)	Flow Factor Qn(l/min)	MOPD (bar)	Max Fluid Temp. (°C)	Page
Direct operated	316L Stainless Steel	Universal	1/4''	5,7	7,5	10	100	120
Manual reset	316L Stainless Steel	Universal	1/4''	5,7	7,5	10	100	120

Tel: +45 63 12 83 00 | Email: ps@hymatik.com | www.hymatik.com | Hvidkaervej 27a, DK-5250 Odense SV, Denmark

3/2 3 WAY VALVES DIRECT OPERATED

LOW POWER A03 SERIES MANUAL RESET, STAINLESS STEEL VALVES

FOR PIPE MOUNTING

316L STAINLESS ST. PIPE MOUNTING

UNIVERSAL

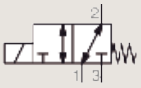

Port size	Orifice Ø	Flow factory KV		Operating Pressure Differential (bar)		Ambient Temp.(1)		Basic part number	Power level	Power (cold)		Dwg. No.
						Min	Max					
	mm	m³/h	l/min	Min	Max ~/=	°C	°C	AISI 316L	~/=	AC W	DC W	
1/4" NPT	5.7	0.45	7.5	0	10	-45	100	**A03RN*24**-R**	RP	3.6	3.6	1
	5.7	0.45	7.5	0	10	-45	100	**A03RN*24**-L**	LP	-	1.8	1

Notes:
Please define the complete ordering system in accordance with the desired configuration.
The Numbering system configurator is shown below:

1	2	3	4	5	6	7	8	9	10	11	12	13	14	15	16
A	0	3	R	N	2	4	M	0	-	L	R	D	N	C	2

4 : Body material

R	SS, 316L

5,6 : Body pipe size

N2	1/4'' NPT
G2	1/4'' BSPP

7: Ambient temp.

4	-45°C to 100°C

8,9: Manual operator selection

MN	None manual operator function
MO	Manual operator function
MS	Manual reset function

11: Coil power level

R	Reduce power, 3, 2-3, 6 W	
L	Low power, 1.5-1.8 W	(1)

12,13,14 : Coil type and cable thread

ADM	NPT 1/2	Flameproof-Alluminium, "d" type Ex housing (EN/IEC 60079-31)
ADM	M20X1.5	
RDN	NPT 1/2	Flameproof-316 SS, "d" type Ex housing (EN/IEC 60079-31)
RDM	M20X1.5	

15,16: Coil voltage

C1	12VDC	RP,LP Available
C2	24VDC	RP, LP Available
C4	48VDC	RP,LP Available
C5	110VDC	RP,LP Available
3N	125VDC	RP Available
B1	24 W / 50 Hz	RP Available
B2	24 W / 60 Hz	RP Available
E6	100 V / 50 Hz	RP Available
0A	110-120 V / 50 Hz	RP Available
F2	200 V / 50 Hz	RP Available
3D	220-230 V / 50 Hz	RP Available
K7	110 V / 60 Hz	RP Available
3K	100-120 V / 60 Hz	RP Available
J2	200 V / 60 Hz	RP Available
7J	220-230 V /60 Hz	RP Available

Notes:
(1). For MS type low power version is not available

Tel: +45 63 12 83 00 | Email: ps@hymatik.com | www.hymatik.com | Hvidkaervej 27a, DK-5250 Odense SV, Denmark

Coil specification	Reduced Power (RP)		Low Power (LP)	
	hot	cold	hot	cold
	3.2 W	3.6 W	1.5 W	1.8 W
Safety code	II2G Ex d IIC Gb T6/T5/T4 II2D Ex t IIIC Db		II2G Ex d IIC Gb T6/T5/T4 II2D Ex t IIIC Db	
Electrical enclosure protection (EN 60529)	IP66/67 , Al/SS		IP66/67 , Al/SS	
Operator ambient temperature range (C)	-60 to + 65/80/110*C		-60 to + 65/80/110*C	

(1) Valve temperature range:
The valve temperature range (TS) is determined by the selected seal material , the temperature range for proper operations of the valve and sometimes by the fluid

(2) Operator ambient temperature range:
The operator ambient temperature range is determinated by the selected power level and the safety code.

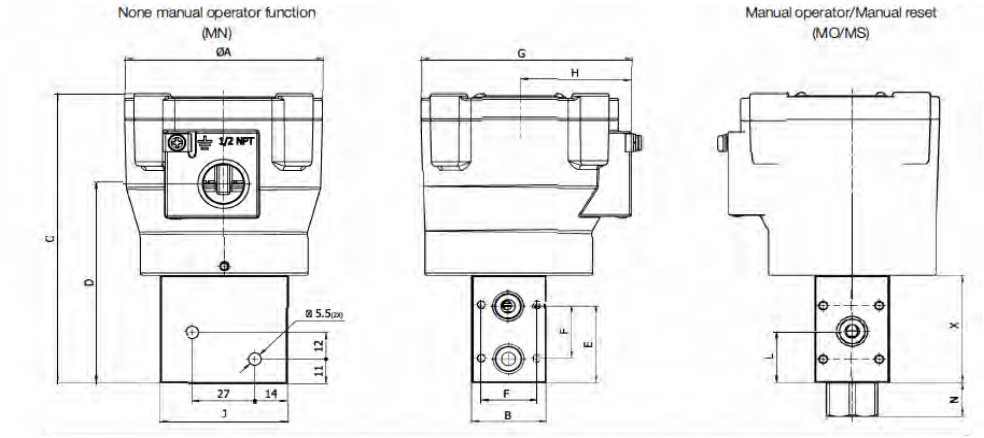

Drawing 1

Power Level	Coil Type	A	B	C	D	E	F	G	H	J	L	N	X	Weight (Kg)
L	RDN,RDM	85	32	140	100	35	24	90.5	48	55	23	15	58.2	2.85
	ADN,ADM	85	32	140	100	35	24	90.5	48	55	23	15	58.2	1.82
R	RDN,RDM	85	32	130	90	35	24	90.5	48	55	23	15	48.2	2.78
	ADN,ADM	85	32	130	90	35	24	90.5	48	55	23	15	48.2	1.75

Tel: +45 63 12 83 00 | Email: ps@hymatik.com | www.hymatik.com | Hvidkaervej 27a, DK-5250 Odense SV, Denmark



3 WAY VALVES DIRECT OPERATED

B04-B14 SERIES - BANJO VALVES



3/2

Actuation	Body	Function	Port Size	Orifice (mm)	Flow Factor Qn(l/min)	MOPD (bar)	Max Fluid Temp. (°C)	Page
Direct Operated	Anodized Aluminium/Banjo	Normally Closed	1/8"	1.2	50	10	50	124
			1/4"-1/8"	1.2	50	10	50	124

3/2 3 WAY VALVES DIRECT OPERATED

B04-B14 SERIES - BANJO VALVES

ANODIZED ALUMINIUM BANJO

NORMALLY CLOSED

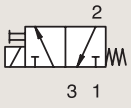

Port size	Orifice Ø	Flow factor	Operating Pressure Differential			Fluid Temp.		Seat Seal	Valve Ref.	Housing Ref.	Coil Ref.	ATEX Zone	Protection Mode	Power		Coil Group	Dwg. No.
			Min	Max(MOPD)		Min	Max										
BSP	mm	Qn l'min	bar	AC bar	DC bar	°C	°C							AC W	DC W		
1/8"	1.2	50	0	10	10	-10	50	NBR	131B14 $_{12}$	-	496131	-	-	3	3	1.2	8227
	1.2	50	0	10	10	-10	50	NBR	131B14 $_{12}$	-	496482	-	-	3	3	1.2	8227
	1.2	50	0	10	10	-10	50	NBR	131B14 $_{12}$	-	496637	22	Ex tD A22 IP65 - T95°C	3	3	1.2	8227

Notes:
1. With manual override
2. Valve only compatible with air and neutral gases

ANODIZED ALUMINIUM BANJO

NORMALLY CLOSED

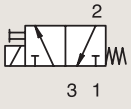

Port size	Orifice Ø	Flow factor	Operating Pressure Differential			Fluid Temp.		Seat Seal	Valve Ref.	Housing Ref.	Coil Ref.	ATEX Zone	Protection Mode	Power		Coil Group	Dwg. No.
			Min	Max(MOPD)		Min	Max										
BSP	mm	Qn l'min	bar	AC bar	DC bar	°C	°C							AC W	DC W		
1/4"	1.2	50	0	10	10	-10	50	NBR	131B04 $_{12}$	-	496131	-	-	3	3	1.2	8226
	1.2	50	0	10	10	-10	50	NBR	131B04 $_{12}$	-	496482	-	-	3	3	1.2	8226
	1.2	50	0	10	10	-10	50	NBR	131B04 $_{12}$	-	496637	22	Ex tD A22 IP65 - T95°C	3	3	1.2	8226

Notes:
1. With manual override
2. Valve only compatible with air and neutral gases

Tel: +45 63 12 83 00 | Email: ps@hymatik.com | www.hymatik.com | Hvidkaervej 27a, DK-5250 Odense SV, Denmark

For this page	Port size	Orifice (mm)	Qn (l/min)	MOPD (bar)	Fluid Temp (°C)	Amb Temp (°C)
From	1/8"	1.2	50	10	-10	-10
To	1/4"-1/8"	1.2	50	10	50	50

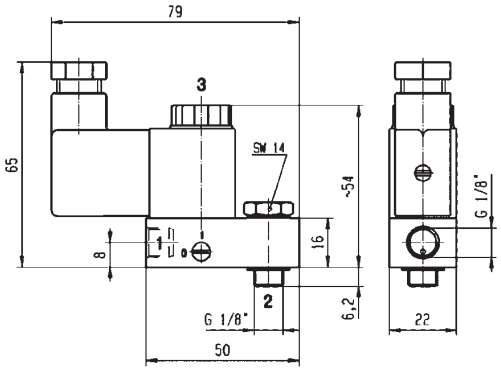



Drawing 8227

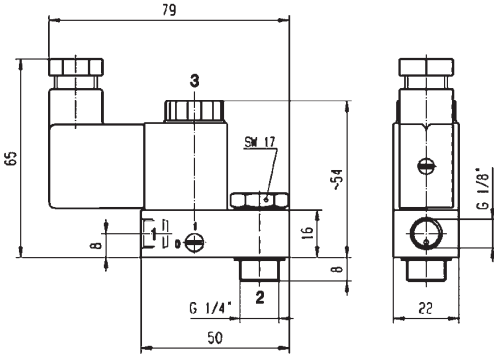



Drawing 8226

Parker Hannifin Corporation
Fluid Control Solutions Europe
Process Catalogue FCSE/1121/UK/V1.0

Tel: +45 63 12 83 00 | Email: ps@hymatik.com | www.hymatik.com | Hvidkaervej 27a, DK-5250 Odense SV, Denmark



3 AND 5 WAY VALVES PILOT OPERATED

F SERIES - BRASS AND ALUMINIUM VALVES FOR FLANGE MOUNTING



3/2
5/2

Actuation	Body	Function	Port Size	Orifice (mm)	Flow Factor Qn(l/min)	MOPD (bar)	Max Fluid Temp. (°C)	Page
Pilot Operated	Brass/Sub-base Mounting	Normally Closed	14 mm	14	2100	13	50	128
	Anodized Aluminium/Sub-base Mounting	Normally Closed	6 mm	6	630	10	75	130
		Control by Electric Impulse	6 mm	6	630	10	75	130

3/2 5/2

3 AND 5 WAY VALVES PILOT OPERATED

F SERIES - BRASS AND ALUMINIUM VALVES FOR FLANGE MOUNTING

BRASS
SUB-BASE MOUNTING
NORMALLY CLOSED

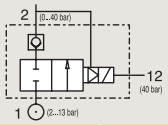

Port size	Orifice Ø	Flow factor	Operating Pressure Differential Min	Operating Pressure Differential Max(MOPD) AC	Operating Pressure Differential Max(MOPD) DC	Fluid Temp. Min	Fluid Temp. Max	Seat Seal	Valve Ref.	Housing Ref.	Coil Ref.	ATEX Zone	Protection Mode	Power AC	Power DC	Coil Group	Dwg. No.
	mm	Qn l'min	bar	AC bar	DC bar	°C	°C							W	W		
SB	14	2100	2	13	13	-10	50	PUR	**421F35**	**-**	**495905**	1-21	Ex db mb IIC T4	8	8	2.1	3520
	14	2100	2	13	13	-10	50	PUR	**421F35**	**2995**	**495870**	2-22	Ex nc AC IIC T3/T4	8	9	2.1	3520
	14	2100	2	13	13	-10	50	PUR	**421F35**	**2995**	**481865**	-	-	8	9	2.1	3520

Tel: +45 63 12 83 00 | Email: ps@hymatik.com | www.hymatik.com | Hvidkaervej 27a, DK-5250 Odense SV, Denmark

IECEx certified

For this page	Port size	Orifice (mm)	Qn (l/min)	MOPD (bar)	Fluid Temp (°C)	Amb Temp (°C)
From	14 mm	14	2100	13	-10	-10
To	14 mm	14	2100	13	50	50

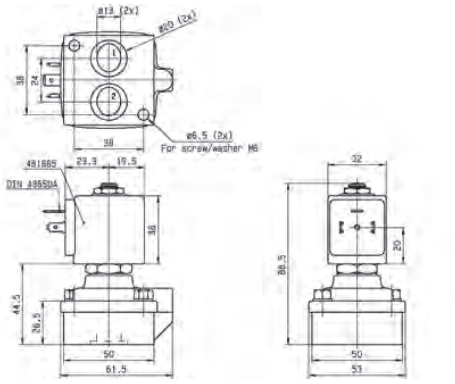



Drawing 3520

3/2 5/2

3 AND 5 WAY VALVES PILOT OPERATED

F SERIES - BRASS AND ALUMINIUM VALVES FOR FLANGE MOUNTING

ANODIZED ALUMINIUM SUB-BASE MOUNTING

NORMALLY CLOSED

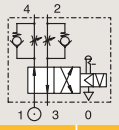

Port size	Orifice Ø	Flow factor	Operating Pressure Differential			Fluid Temp.		Seat Seal	Valve Ref.	Housing Ref.	Coil Ref.	ATEX Zone	Protection Mode	Power		Coil Group	Dwg. No.
			Min	Max(MOPD)		Min	Max										
	mm	Qn l'min	bar	AC bar	DC bar	°C	°C							AC W	DC W		
SB	6	630	1	10	10	-10	65	FKM	341F34 [1]	-	495905	1-21	Ex db mb IIC T4	8	8	2.0/2.1	3287
	6	630	1	10	10	-10	60	FKM	341F34 [1]	2995	495870	2-22	Ex nc AC IIC T3/T4	8	9	2.0/2.1	3287
	6	630	1	10	10	-10	75	FKM	341F34 [1]	2995	481865	-	-	8	9	2.0/2.1	3287
	6	630	1	10	10	-10	65	FKM	341F3403	-	495905	1-21	Ex db mb IIC T4	8	8	2.0/2.1	3287
	6	630	1	10	10	-10	60	FKM	341F3403	2995	495870	2-22	Ex nc AC IIC T3/T4	8	9	2.0/2.1	3287
	6	630	1	10	10	-10	75	FKM	341F3403	2995	481865	-	-	8	9	2.0/2.1	3287
	6	630	1	10	10	-25	65	PUR	341F3440	-	495905	1-21	Ex db mb IIC T4	8	8	2.0/2.1	3287
	6	630	1	10	10	-25	60	PUR	341F3440	2995	495870	2-22	Ex nc AC IIC T3/T4	8	9	2.0/2.1	3287
	6	630	1	10	10	-25	75	PUR	341F3440	2995	481865	-	-	8	9	2.0/2.1	3287

Notes:
1.With flow regulator

ANODIZED ALUMINIUM SUB-BASE MOUNTING

CONTROL BY ELECTRIC IMPULSE

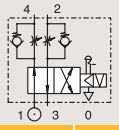

Port size	Orifice Ø	Flow factor	Operating Pressure Differential			Fluid Temp.		Seat Seal	Valve Ref.	Housing Ref.	Coil Ref.	ATEX Zone	Protection Mode	Power		Coil Group	Dwg. No.
			Min	Max(MOPD)		Min	Max										
	mm	Qn l'min	bar	AC bar	DC bar	°C	°C							AC W	DC W		
SB	6	630	1	10	-	-10	75	FKM	345F34 [1]	4269	484990	-	-	11	-	4.0	3287
	6	630	1	-	10	-10	75	FKM	345F34 [1]	4269	485400	-	-	-	13	4.0	3287

Notes:
1.With flow regulator

Tel: +45 63 12 83 00 | Email: ps@hymatik.com | www.hymatik.com | Hvidkaervej 27a, DK-5250 Odense SV, Denmark

For this page	Port size	Orifice (mm)	Qn (l/min)	MOPD (bar)	Fluid Temp (°C)	Amb Temp (°C)
From	14 mm	14	2100	13	-10	-10
To	14 mm	14	2100	13	50	50

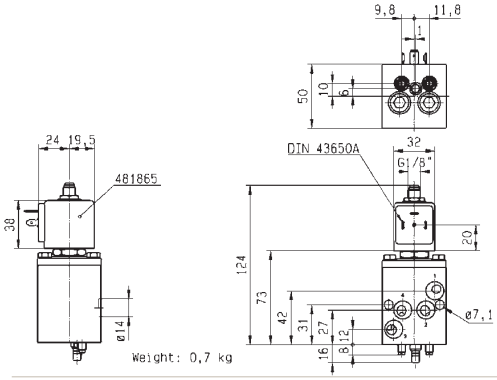



Drawing 3287

Tel: +45 63 12 83 00 | Email: ps@hymatik.com | www.hymatik.com | Hvidkaervej 27a, DK-5250 Odense SV, Denmark

Tel: +45 63 12 83 00 | Email: ps@hymatik.com | www.hymatik.com | Hvidkaervej 27a, DK-5250 Odense SV, Denmark



3 AND 5 WAY VALVES PILOT OPERATED

B SERIES - ALUMINIUM POPPET VALVES FOR PIPE MOUNTING

Oil Air

3/2
5/2

Actuation	Body	Function	Port Size	Orifice (mm)	Flow Factor Qn(l/min)	MOPD (bar)	Max Fluid Temp. (°C)	Page
Pilot Operated	Anodized Aluminium/ Pipe Mounting	Normally Closed	1/4"	6 to 8	1100	40	75	134
			1/2"	14	2500	15	75	134
		Normally Open	1/4"	8	1100	40	75	144
			1/2"	14	2500	15	100	146
		Control by Electric Impulse	1/4"	6 to 8	1100	15	75	148
			1/2"	14	2500	15	75	148

Tel: +45 63 12 83 00 | Email: ps@hymatik.com | www.hymatik.com | Hvidkaervej 27a, DK-5250 Odense SV, Denmark

3/2 5/2

3 AND 5 WAY VALVES PILOT OPERATED

B SERIES - ALUMINIUM POPPET VALVES FOR PIPE MOUNTING

ANODIZED ALUMINIUM PIPE MOUNTING

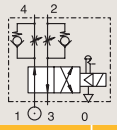

NORMALLY CLOSED

Port size	Orifice Ø	Flow factor			Operating Pressure Differential Min Max(MOPD)			Fluid Temp. Min	Fluid Temp. Max	Seat Seal	Valve Ref.	Housing Ref.	Coil Ref.	ATEX Zone	Protection Mode	Power		Coil Group	Dwg. No.
BSP	mm	Kv l/min	KV m³/h	Qn l'min	bar	AC bar	DC bar	°C	°C							AC W	DC W		
1/4"	6	9	0.54	630	1	10	10	-10	65	NBR	341B34 12	-	495905	1-21	Ex db mb IIC T4	8	8	2.1	3286
	6	9	0.54	630	1	10	10	-10	60	NBR	341B34 12	2995	495870	2-22	Ex nc AC IIC T3/T4	8	9	2.1	3286
	6	9	0.54	630	1	10	10	-10	75	NBR	341B34 12	2995	481865	-	-	8	9	2.1	3286
	6	9	0.54	630	1	10	10	-10	65	NBR	341B3403 2	-	495905	1-21	Ex db mb IIC T4	8	8	2.1	3286
	6	9	0.54	630	1	10	10	-10	60	NBR	341B3403 2	2995	495870	2-22	Ex nc AC IIC T3/T4	8	9	2.1	3286
	6	9	0.54	630	1	10	10	-10	75	NBR	341B3403 2	2995	481865	-	-	8	9	2.1	3286
	6	9	0.54	560	1	-	10	-10	55	NBR	341B3490	2995	483580.01	0-20	Ex ia IIC T6	-	0.5 to 3	6.0/7.0/8.0	3561
	6	9	0.54	560	1	-	10	-10	65	NBR	341B3490	-	495910	0-20	Ex ia IIC T4 to T6	-	0.3 to 3	6.0/7.0/8.0	3561
	6	9	0.54	560	1	10	10	-10	65	NBR	341B3490	-	495900	1-21	Ex db mb IIC T4 to T6	2.5	2	6.0/7.0/8.0	3561

Notes:
1.With flow regulator
2. With manual override

Tel: +45 63 12 83 00 | Email: ps@hymatik.com | www.hymatik.com | Hvidkaervej 27a, DK-5250 Odense SV, Denmark

IECEx certified

For this page	Port size	Orifice (mm)	Qn (l/min)	MOPD (bar)	Fluid Temp (°C)	Amb Temp (°C)
From	1/4"	6	560	10	-10	-10
To	1/4"	6	630	10	75	50

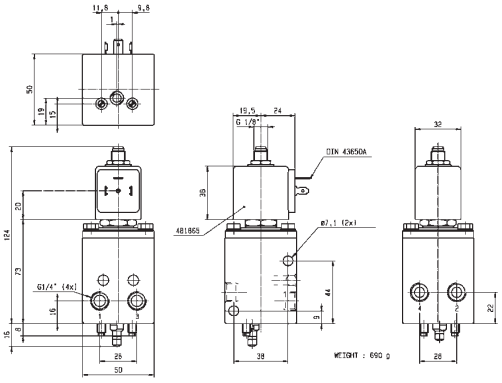



Drawing 3286

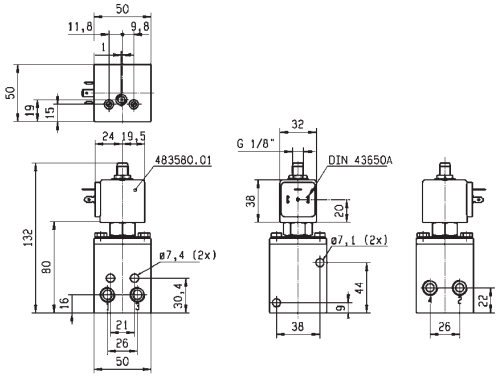



Drawing 3561

Parker Hannifin Corporation
Fluid Control Solutions Europe
Process Catalogue FCSE/1121/UK/V1.0

Tel: +45 63 12 83 00 | Email: ps@hymatik.com | www.hymatik.com | Hvidkaervej 27a, DK-5250 Odense SV, Denmark

3/2 5/2

3 AND 5 WAY VALVES PILOT OPERATED

B SERIES - ALUMINIUM POPPET VALVES FOR PIPE MOUNTING

ANODIZED ALUMINIUM PIPE MOUNTING

NORMALLY CLOSED

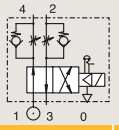

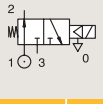

Port size	Orifice Ø	Flow factor			Operating Pressure Differential Min	Max(MOPD)		Fluid Temp. Min	Max	Seat Seal	Valve Ref.	Housing Ref.	Coil Ref.	ATEX Zone	Protection Mode	Power		Coil Group	Dwg. No.
BSP	mm	Kv l/min	KV m³/h	Qn l/min	bar	AC bar	DC bar	°C	°C							AC W	DC W		
1/4"	6	9	0.54	630	1	10	10	-25	65	PUR	341B3440 [3]	-	495905	1-21	Ex db mb IIC T4	8	8	2.1	3286
	6	9	0.54	630	1	10	10	-25	60	PUR	341B3440 [3]	2995	495870	2-22	Ex nc AC IIC T3/T4	8	9	2.1	3286
	6	9	0.54	630	1	10	10	-25	75	PUR	341B3440 [3]	2995	481865	-	-	8	9	2.1	3286
	6.5	10	0.60	645	1	-	10	-10	55	NBR	331B7490 [1]	2995	483580.01	0-20	Ex ia IIC T6	-	0.5 to 3	6.0/7.0/8.0	8270
	6.5	10	0.60	645	1	-	10	-10	65	NBR	331B7490 [1]	-	495910	0-20	Ex ia IIC T4 to T6	-	0.3 to 3	6.0/7.0/8.0	8270
	6.5	10	0.60	645	1	10	10	-10	65	NBR	331B7490 [1]	-	495900	1-21	Ex db mb IIC T4 to T6	2.5	2	6.0/7.0/8.0	8270
	6.5	10	0.60	750	1	10	10	-10	65	NBR	E331B74 [12]	-	495905	1-21	Ex db mb IIC T4	8	8	2.1	3240
	6.5	10	0.60	750	1	10	10	-10	60	NBR	E331B74 [12]	2995	495870	2-22	Ex nc AC IIC T3/T4	8	9	2.1	3240
	6.5	10	0.60	750	1	10	10	-10	75	NBR	E331B74 [12]	2995	481865	-	-	8	9	2.1	3240

Notes:
1.Valve only compatible with air and neutral gases
2.With manual override
3. With flow regulator

Tel: +45 63 12 83 00 | Email: ps@hymatik.com | www.hymatik.com | Hvidkaervej 27a, DK-5250 Odense SV, Denmark

For this page	Port size	Orifice (mm)	Qn (l/min)	MOPD (bar)	Fluid Temp (°C)	Amb Temp (°C)
From	1/4"	6	630	10	-25	-25
To	1/4"	6.5	750	10	75	50

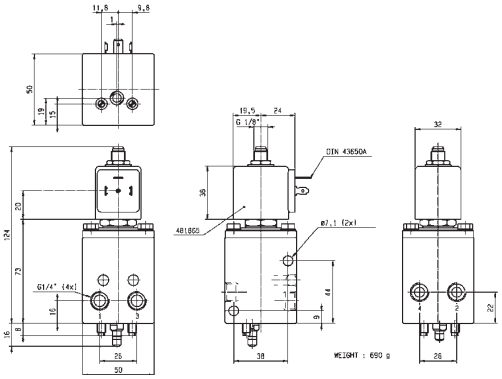



Drawing 3286

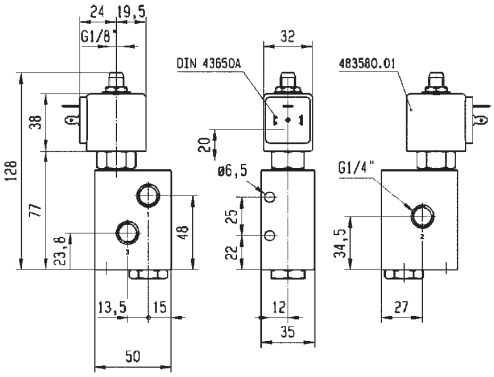



Drawing 8270

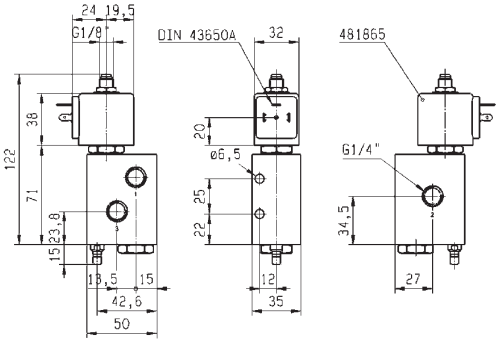



Drawing 3240

Parker Hannifin Corporation
Fluid Control Solutions Europe
Process Catalogue FCSE/1121/UK/V1.0

3/2 5/2

3 AND 5 WAY VALVES PILOT OPERATED

B SERIES - ALUMINIUM POPPET VALVES FOR PIPE MOUNTING

ANODIZED ALUMINIUM PIPE MOUNTING

NORMALLY CLOSED

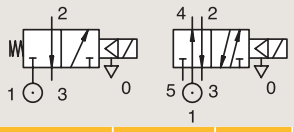

Port size	Orifice Ø	Flow factor			Operating Pressure Differential Min	Max(MOPD)		Fluid Temp. Min	Max	Seat Seal	Valve Ref.	Housing Ref.	Coil Ref.	ATEX Zone	Protection Mode	Power		Coil Group	Dwg. No.
BSP	mm	Kv l/min	KV m³/h	Qn l/min	bar	AC bar	DC bar	°C	°C							AC W	DC W		
1/4"	8	10	0.60	750	1	40	40	-10	65	NBR	**331B02** [1]	-	**495905**	1-21	Ex db mb IIC T4	8	8	2.1	8114
	8	10	0.60	750	1	40	40	-10	60	NBR	**331B02** [1]	**2995**	**495870**	2-22	Ex nc AC IIC T3/T4	8	9	2.1	8114
	8	10	0.60	750	1	40	40	-10	75	NBR	**331B02** [1]	**2995**	**481865**	-	-	8	9	2.1	8114
	8	10	0.60	640	1	40	40	-10	65	NBR	**341B02** [2]	-	**495905**	1-21	Ex db mb IIC T4	8	8	2.1	8115
	8	10	0.60	640	1	40	40	-10	60	NBR	**341B02** [2]	**2995**	**495870**	2-22	Ex nc AC IIC T3/T4	8	9	2.1	8115
	8	10	0.60	640	1	40	40	-10	75	NBR	**341B02** [2]	**2995**	**481865**	-	-	8	9	2.1	8115

Notes:
1.Pilot seat discs in Kel-F (PCTFE); valve with pilot return pipe
2.Valve with pilot return pipe on exhaust port

Tel: +45 63 12 83 00 | Email: ps@hymatik.com | www.hymatik.com | Hvidkaervej 27a, DK-5250 Odense SV, Denmark

For this page	Port size	Orifice (mm)	Qn (l/min)	MOPD (bar)	Fluid Temp (°C)	Amb Temp (°C)
From	1/4"	8	640	40	-10	-10
To	1/4"	8	750	40	75	50

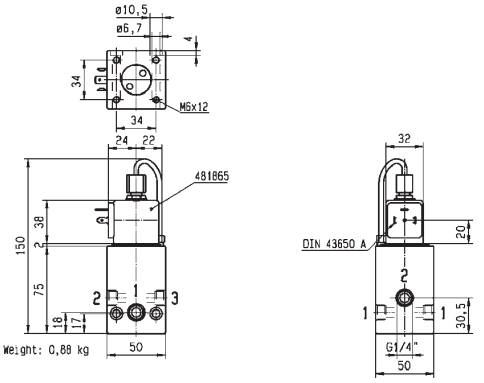



Drawing 8114

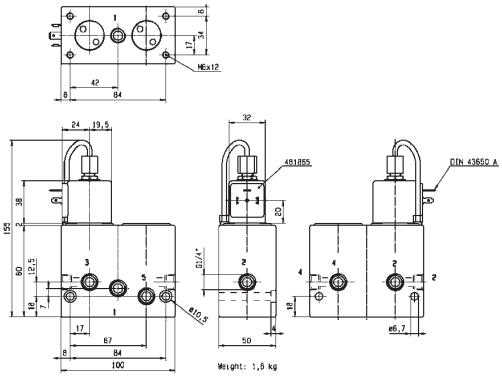



Drawing 8115

Tel: +45 63 12 83 00 | Email: ps@hymatik.com | www.hymatik.com | Hvidkaervej 27a, DK-5250 Odense SV, Denmark

3/2 5/2

3 AND 5 WAY VALVES PILOT OPERATED

B SERIES - ALUMINIUM POPPET VALVES FOR PIPE MOUNTING

ANODIZED ALUMINIUM PIPE MOUNTING

NORMALLY CLOSED

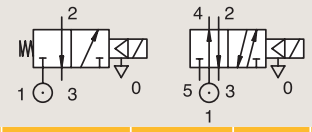

Port size	Orifice Ø	Flow factor			Operating Pressure Differential Min	Max(MOPD)		Fluid Temp. Min	Max	Seat Seal	Valve Ref.	Housing Ref.	Coil Ref.	ATEX Zone	Protection Mode	Power		Coil Group	Dwg. No.
BSP	mm	Kv l/min	KV m³/h	Qn l/min	bar	AC bar	DC bar	°C	°C							AC W	DC W		
1/4"	8	20	1.20	1100	1	15	15	-10	65	FKM	E331B01 [1]	-	495905	1-21	Ex db mb IIC T4	8	8	2.1	3234
	8	20	1.20	1100	1	15	15	-10	60	FKM	E331B01 [1]	2995	495870	2-22	Ex nc AC IIC T3/T4	8	9	2.1	3234
	8	20	1.20	1100	1	15	15	-10	75	FKM	E331B01 [1]	2995	481865	-	-	8	9	2.1	3234
	8	16	0.96	1000	1	15	15	-10	65	NBR	E341B01 [1]	-	495905	1-21	Ex db mb IIC T4	8	8	2.1	3309
	8	16	0.96	1000	1	15	15	-10	60	NBR	E341B01 [1]	2995	495870	2-22	Ex nc AC IIC T3/T4	8	9	2.1	3309
	8	16	0.96	1000	1	15	15	-10	75	NBR	E341B01 [1]	2995	481865	-	-	8	9	2.1	3309

Notes:
1.Valve only compatible with hydraulic oil and air/neutral gases

Tel: +45 63 12 83 00 | Email: ps@hymatik.com | www.hymatik.com | Hvidkaervej 27a, DK-5250 Odense SV, Denmark

IECEx certified

For this page	Port size	Orifice (mm)	Qn (l/min)	MOPD (bar)	Fluid Temp (°C)	Amb Temp (°C)
From	1/4"	8	1000	15	-10	-10
To	1/4"	8	1100	15	75	50

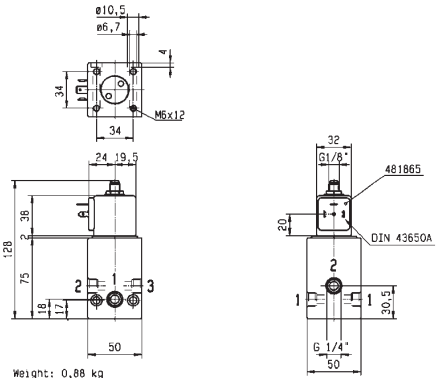



Drawing 3234

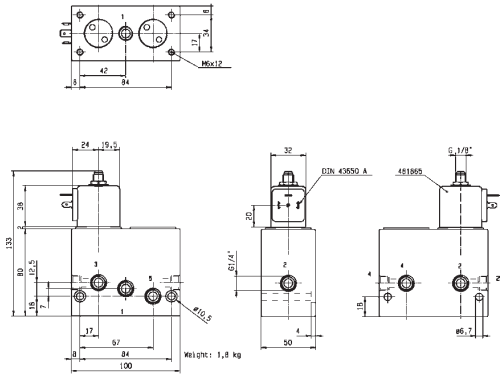



Drawing 3309

Tel: +45 63 12 83 00 | Email: ps@hymatik.com | www.hymatik.com | Hvidkaervej 27a, DK-5250 Odense SV, Denmark

3/2 5/2

3 AND 5 WAY VALVES PILOT OPERATED

B SERIES - ALUMINIUM POPPET VALVES FOR PIPE MOUNTING

ANODIZED ALUMINIUM PIPE MOUNTING

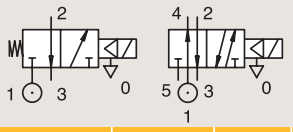

NORMALLY CLOSED

Port size	Orifice Ø	Flow factor			Operating Pressure Differential Min	Max(MOPD)		Fluid Temp. Min	Max	Seat Seal	Valve Ref.	Housing Ref.	Coil Ref.	ATEX Zone	Protection Mode	Power		Coil Group	Dwg. No.
BSP	mm	Kv l/min	KV m³/h	Qn l/min	bar	AC bar	DC bar	°C	°C							AC W	DC W		
1/2"	14	-	-	2500	1	15	15	-10	65	FKM	E331B21 [1]	-	495905	1-21	Ex db mb IIC T4	8	8	2.1	3238
	14	-	-	2500	1	15	15	-10	60	FKM	E331B21 [1]	2995	495870	2-22	Ex nc AC IIC T3/T4	8	9	2.1	3238
	14	-	-	2500	1	15	15	-10	75	FKM	E331B21 [1]	2995	481865	-	-	8	9	2.1	3238
	14	-	-	2500	1	15	15	-10	65	NBR	E341B21 [1]	-	495905	1-21	Ex db mb IIC T4	8	8	2.1	3315
	14	-	-	2500	1	15	15	-10	60	NBR	E341B21 [1]	2995	495870	2-22	Ex nc AC IIC T3/T4	8	9	2.1	3315
	14	-	-	2500	1	15	15	-10	75	NBR	E341B21 [1]	2995	481865	-	-	8	9	2.1	3315

Notes:
1.Valve only compatible with air and neutral gases

Tel: +45 63 12 83 00 | Email: ps@hymatik.com | www.hymatik.com | Hvidkaervej 27a, DK-5250 Odense SV, Denmark

For this page	Port size	Orifice (mm)	Qn (l/min)	MOPD (bar)	Fluid Temp (°C)	Amb Temp (°C)
From	1/2"	14	2500	15	-10	-10
To	1/2"	14	2500	15	75	50

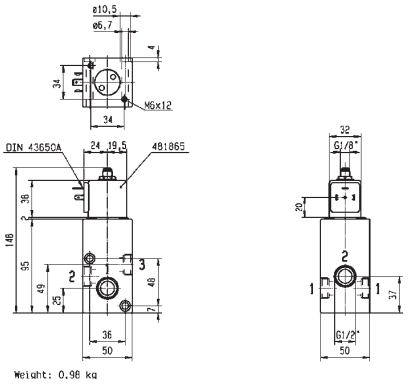



Drawing 3238

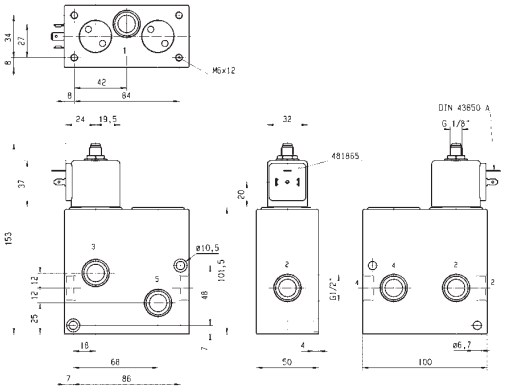



Drawing 3315

Parker Hannifin Corporation
Fluid Control Solutions Europe
Process Catalogue FCSE/1121/UK/V1.0

3/2 5/2

3 AND 5 WAY VALVES PILOT OPERATED

B SERIES - ALUMINIUM POPPET VALVES FOR PIPE MOUNTING

ANODIZED ALUMINIUM PIPE MOUNTING

NORMALLY OPEN

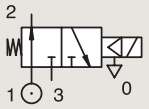

Port size	Orifice Ø	Flow factor			Operating Pressure Differential Min	Max(MOPD)		Fluid Temp. Min	Max	Seat Seal	Valve Ref.	Housing Ref.	Coil Ref.	ATEX Zone	Protection Mode	Power		Coil Group	Dwg. No.
BSP	mm	Kv l/min	KV m³/h	Qn l/min	bar	AC bar	DC bar	°C	°C							AC W	DC W		
1/4"	8	10	0.60	750	1	40	40	-10	65	NBR	332B02 [12]	-	495905	1-21	Ex db mb IIC T4	8	8	2.1	8114
	8	10	0.60	750	1	40	40	-10	60	NBR	332B02 [12]	2995	495870	2-22	Ex nc AC IIC T3/T4	8	9	2.1	8114
	8	10	0.60	750	1	40	40	-10	75	NBR	332B02 [12]	2995	481865	-	-	8	9	2.1	8114
	8	20	1.20	1100	1	15	15	-10	65	FKM	E332B01 [2]	-	495905	1-21	Ex db mb IIC T4	8	8	2.1	3234
	8	20	1.20	1100	1	15	15	-10	60	FKM	E332B01 [2]	2995	495870	2-22	Ex nc AC IIC T3/T4	8	9	2.1	3234
	8	20	1.20	1100	1	15	15	-10	75	FKM	E332B01 [2]	2995	481865	-	-	8	9	2.1	3234

Notes:
1.Pilot seat discs in Kel-F (PCTFE); valve with pilot return pipe
2.Valve only compatible with hydraulic oil and air/neutral gases

Tel: +45 63 12 83 00 | Email: ps@hymatik.com | www.hymatik.com | Hvidkaervej 27a, DK-5250 Odense SV, Denmark

IECEx certified

For this page	Port size	Orifice (mm)	Qn (l/min)	MOPD (bar)	Fluid Temp (°C)	Amb Temp (°C)
From	1/4"	8	750	15	-10	-10
To	1/4"	8	1100	40	75	50

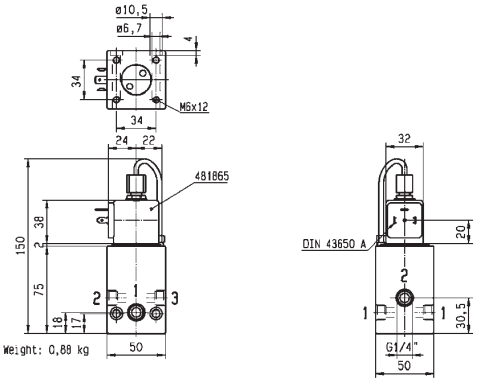



Drawing 8114

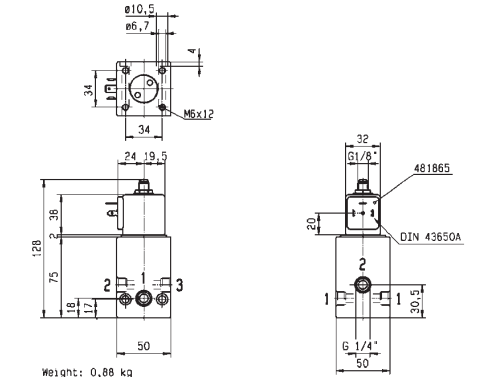



Drawing 3234

Parker Hannifin Corporation
Fluid Control Solutions Europe
Process Catalogue FCSE/1121/UK/V1.0

3/2 5/2

3 AND 5 WAY VALVES PILOT OPERATED

B SERIES - ALUMINIUM POPPET VALVES FOR PIPE MOUNTING

ANODIZED ALUMINIUM PIPE MOUNTING

NORMALLY OPEN

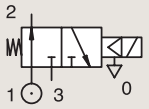

Port size	Orifice Ø	Flow factor			Operating Pressure Differential Max(MOPD)			Fluid Temp.		Seat Seal	Valve Ref.	Housing Ref.	Coil Ref.	ATEX Zone	Protection Mode	Power		Coil Group	Dwg. No.
					Min			Min	Max										
BSP	mm	Kv l/min	KV m³/h	Qn l/min	bar	AC bar	DC bar	°C	°C							AC W	DC W		
1/2"	14	-	-	2500	1	15	15	-10	65	FKM	E332B21 [1]	-	495905	1-21	Ex db mb IIC T4	8	8	2.1	3238
	14	-	-	2500	1	15	15	-10	60	FKM	E332B21 [1]	2995	495870	2-22	Ex nc AC IIC T3/T4	8	9	2.1	3238
	14	-	-	2500	1	15	15	-10	100	FKM	E332B21 [1]	2995	481865	-	-	8	9	2.1	3238

Notes:
1.Valve only compatible with air and neutral gases

For this page	Port size	Orifice (mm)	Qn (l/min)	MOPD (bar)	Fluid Temp (°C)	Amb Temp (°C)
From	1/2"	14	2500	15	-10	-10
To	1/2"	14	2500	15	100	50

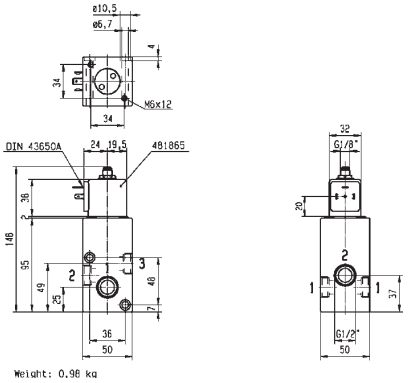

Weight: 0.98 kg



Drawing 3238

3/2 5/2

3 AND 5 WAY VALVES PILOT OPERATED

B SERIES - ALUMINIUM POPPET VALVES FOR PIPE MOUNTING

ANODIZED ALUMINIUM PIPE MOUNTING

CONTROL BY ELECTRIC IMPULSE

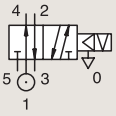

Port size	Orifice Ø	Flow factor			Operating Pressure Differential Min	Max(MOPD)		Fluid Temp. Min	Max	Seat Seal	Valve Ref.	Housing Ref.	Coil Ref.	ATEX Zone	Protection Mode	Power		Coil Group	Dwg. No.
BSP	mm	Kv l/min	KV m^3/h	Qn l/min	bar	AC bar	DC bar	°C	°C							AC W	DC W		
1/4"	6	9	0.54	630	1	10	-	-10	75	NBR	345B34 [12]	4269	484990	-	-	11	-	4.0	3286
	6	9	0.54	630	1	-	10	-10	75	NBR	345B34 [12]	4269	485400	-	-	-	13	4.0	3286
	8	16	0.96	1000	1	15	-	-10	75	NBR	345B04	4269	484990	-	-	11	-	4.0	3309
	8	16	0.96	1000	1	-	15	-10	75	NBR	345B04	4269	485400	-	-	-	13	4.0	3309
1/2"	14	40	2.40	2500	1	15	-	-10	75	NBR	345B24	4269	484990	-	-	11	-	4.0	3315
	14	40	2.40	2500	1	-	15	-10	75	NBR	345B24	4269	485400	-	-	-	13	4.0	3315

Notes:
1.With flow regulator
2.Valve only compatible with air and neutral gases

For this page	Port size	Orifice (mm)	Qn (l/min)	MOPD (bar)	Fluid Temp (°C)	Amb Temp (°C)
From	1/4"	6	630	10	-10	-10
To	1/2"	14	2500	15	75	50

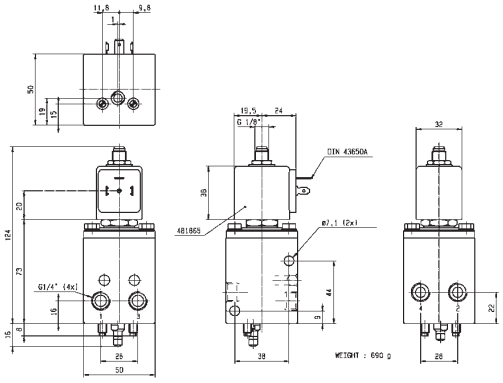



Drawing 3286

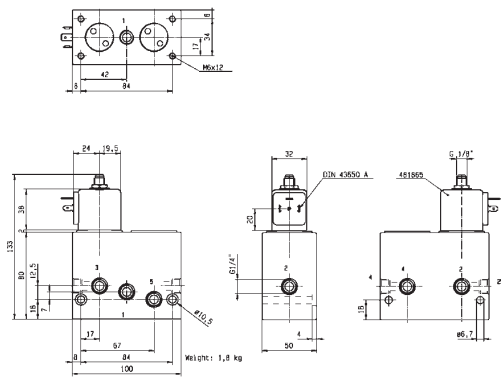



Drawing 3309

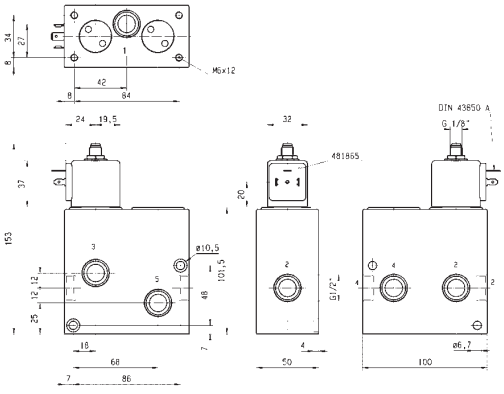



Drawing 3315

Parker Hannifin Corporation
Fluid Control Solutions Europe
Process Catalogue FCSE/1121/UK/V1.0

Tel: +45 63 12 83 00 | Email: ps@hymatik.com | www.hymatik.com | Hvidkaervej 27a, DK-5250 Odense SV, Denmark

Tel: +45 63 12 83 00 | Email: ps@hymatik.com | www.hymatik.com | Hvidkaervej 27a, DK-5250 Odense SV, Denmark



3 AND 5 WAY VALVES PILOT OPERATED

P03-P04 SERIES - HIGH FLOW ALUMINIUM SPOOL VALVES FOR PIPE MOUNTING



3/2
5/2

Actuation	Body	Function	Port Size	Orifice (mm)	Flow Factor Qn(l/min)	MOPD (bar)	Max Fluid Temp. (°C)	Page
Pilot Operated	**Anodized Aluminium/Pipe Mounting**	**Normally Closed**	1/4"	7	1250	10	50	**152**
			1/2"	12	3000	10	50	**154**
		Dual Solenoids	1/4"	7	1250	10	50	**156**
			1/2"	12	3000	10	50	**158**

Tel: +45 63 12 83 00 | Email: ps@hymatik.com | www.hymatik.com | Hvidkaervej 27a, DK-5250 Odense SV, Denmark

3/2 5/2

3 AND 5 WAY VALVES PILOT OPERATED

P03-P04 SERIES - HIGH FLOW ALUMINIUM SPOOL VALVES FOR PIPE MOUNTING

ANODIZED ALUMINIUM PIPE MOUNTING

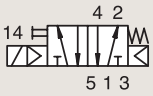

NORMALLY CLOSED

Port size	Orifice Ø	Flow factor	Operating Pressure Differential Min	Max(MOPD)		Fluid Temp. Min	Max	Seat Seal	Valve Ref.	Housing Ref.	Coil Ref.	ATEX Zone	Protection Mode	Power		Coil Group	Dwg. No.
BSP	mm	Qn l'min	bar	AC bar	DC bar	°C	°C							AC W	DC W		
1/4"	7	1250	2.5	10	10	-20	50	NBR	341P03 [1]	-	496131	-	-	3	3	1.2	8218
	7	1250	2.5	10	10	-20	50	NBR	341P03 [1]	-	496482	-	-	3	3	1.2	8218
	7	1250	2.5	10	10	-20	50	NBR	341P03 [1]	-	496637	22	Ex tD A22 IP65 - T95°C	3	3	1.2	8218
	7	1250	2.5	10	10	-20	50	NBR	341P33 [12]	-	495905	1-21	Ex db mb IIC T4	8	8	2.1	8219
	7	1250	2.5	10	10	-20	50	NBR	341P33 [12]	2995	495870	2-22	Ex nc AC IIC T3/T4	8	9	2.1	8219
	7	1250	2.5	10	10	-20	50	NBR	341P33 [12]	2995	481865	-	-	8	9	2.1	8219

Notes:
1.With manual override
2.Pilot seat in FKM

Tel: +45 63 12 83 00 | Email: ps@hymatik.com | www.hymatik.com | Hvidkaervej 27a, DK-5250 Odense SV, Denmark

For this page	Port size	Orifice (mm)	Qn (l/min)	MOPD (bar)	Fluid Temp (°C)	Amb Temp (°C)
From	1/4"	7	1250	10	-20	-20
To	1/4"	7	1250	10	50	50

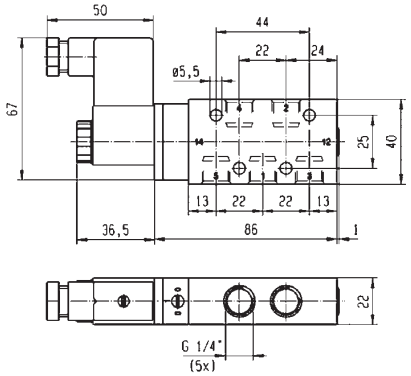



Drawing 8218

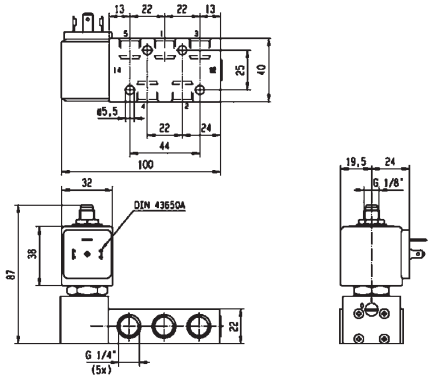



Drawing 8219

Parker Hannifin Corporation
Fluid Control Solutions Europe
Process Catalogue FCSE/1121/UK/V1.0

3/2 5/2

3 AND 5 WAY VALVES PILOT OPERATED

P03-P04 SERIES - HIGH FLOW ALUMINIUM SPOOL VALVES FOR PIPE MOUNTING

ANODIZED ALUMINIUM PIPE MOUNTING

NORMALLY CLOSED

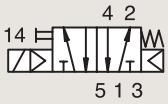

Port size	Orifice Ø	Flow factor	Operating Pressure Differential			Fluid Temp.		Seat Seal	Valve Ref.	Housing Ref.	Coil Ref.	ATEX Zone	Protection Mode	Power		Coil Group	Dwg. No.
			Min	Max(MOPD)		Min	Max										
BSP	mm	Qn l'min	bar	AC bar	DC bar	°C	°C							AC W	DC W		
1/2"	12	3000	2.5	10	10	-20	50	NBR	341P04 [1]	-	496131	-	-	3	3	1.2	8220
	12	3000	2.5	10	10	-20	50	NBR	341P04 [1]	-	496482	-	-	3	3	1.2	8220
	12	3000	2.5	10	10	-20	50	NBR	341P04 [1]	-	496637	22	Ex tD A22 IP65 - T95°C	3	3	1.2	8220
	12	3000	2.5	10	10	-20	50	NBR	341P34 [12]	-	495905	1-21	Ex db mb IIC T4	8	8	2.1	8221
	12	3000	2.5	10	10	-20	50	NBR	341P34 [12]	2995	495870	2-22	Ex nc AC IIC T3/T4	8	9	2.1	8221
	12	3000	2.5	10	10	-20	50	NBR	341P34 [12]	2995	481865	-	-	8	9	2.1	8221

Notes:
1.With manual override
2.Pilot seat in FKM

Tel: +45 63 12 83 00 | Email: ps@hymatik.com | www.hymatik.com | Hvidkaervej 27a, DK-5250 Odense SV, Denmark

For this page	Port size	Orifice (mm)	Qn (l/min)	MOPD (bar)	Fluid Temp (°C)	Amb Temp (°C)
From	1/2"	12	3000	10	-20	-20
To	1/2"	12	3000	10	50	50

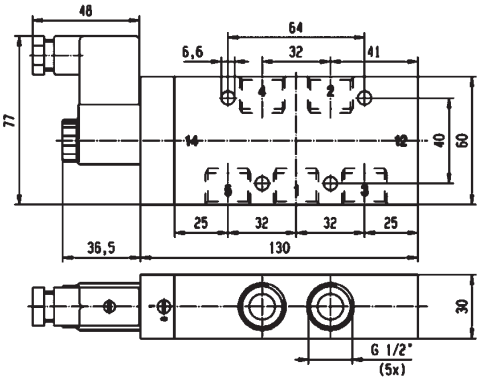



Drawing 8220

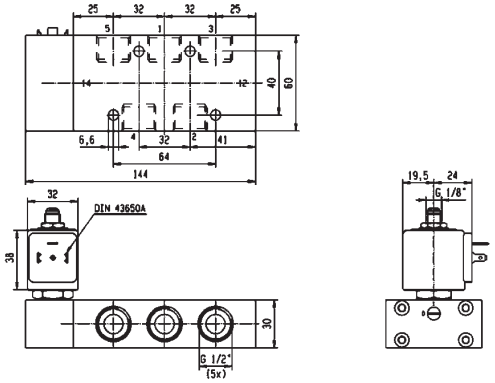

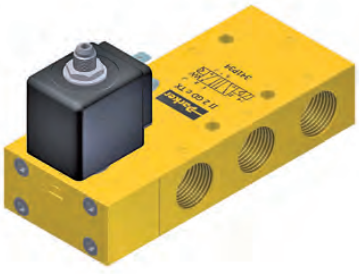

Drawing 8221

Parker Hannifin Corporation
Fluid Control Solutions Europe
Process Catalogue FCSE/1121/UK/V1.0

3/2 5/2

3 AND 5 WAY VALVES PILOT OPERATED

P03-P04 SERIES - HIGH FLOW ALUMINIUM SPOOL VALVES FOR PIPE MOUNTING

ANODIZED ALUMINIUM PIPE MOUNTING

DUAL SOLENOIDS

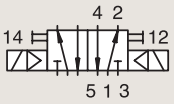

Port size	Orifice Ø	Flow factor	Operating Pressure Differential Min	Operating Pressure Differential Max(MOPD)		Fluid Temp. Min	Fluid Temp. Max	Seat Seal	Valve Ref.	Housing Ref.	Coil Ref.	ATEX Zone	Protection Mode	Power		Coil Group	Dwg. No.
BSP	mm	Qn l'min	bar	AC bar	DC bar	°C	°C							AC W	DC W		
1/4"	7	1250	2.5	10	10	-20	50	NBR	347P03 [1]	-	496131	-	-	3	3	1.2	8222
	7	1250	2.5	10	10	-20	50	NBR	347P03 [1]	-	496482	-	-	3	3	1.2	8222
	7	1250	2.5	10	10	-20	50	NBR	347P03 [1]	-	496637	22	Ex tD A22 IP65 - T95°C	3	3	1.2	8222
	7	1250	2.5	10	10	-20	50	NBR	347P33 [12]	-	495905	1-21	Ex db mb IIC T4	8	8	2.1	8223
	7	1250	2.5	10	10	-20	50	NBR	347P33 [12]	2995	495870	2-22	Ex nc AC IIC T3/T4	8	9	2.1	8223
	7	1250	2.5	10	10	-20	50	NBR	347P33 [12]	2995	481865	-	-	8	9	2.1	8223

Notes:
1.With manual override
2.Pilot seat in FKM

Tel: +45 63 12 83 00 | Email: ps@hymatik.com | www.hymatik.com | Hvidkaervej 27a, DK-5250 Odense SV, Denmark

For this page	Port size	Orifice (mm)	Qn (l/min)	MOPD (bar)	Fluid Temp (°C)	Amb Temp (°C)
From	1/4"	7	1250	10	-20	-20
To	1/4"	7	1250	10	50	50

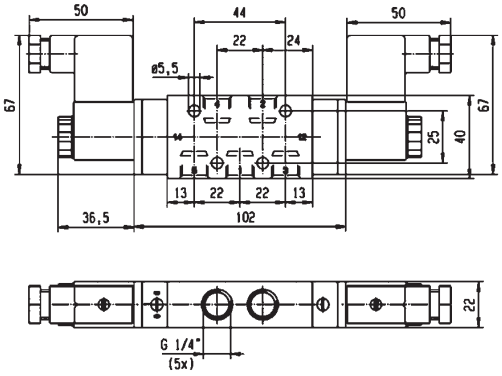



Drawing 8222

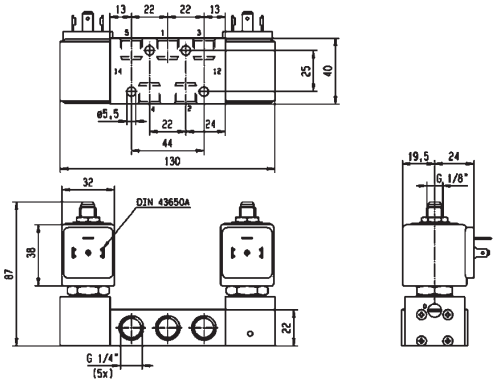



Drawing 8223

Parker Hannifin Corporation
Fluid Control Solutions Europe
Process Catalogue FCSE/1121/UK/V1.0

3/2 5/2

3 AND 5 WAY VALVES PILOT OPERATED

P03-P04 SERIES - HIGH FLOW ALUMINIUM SPOOL VALVES FOR PIPE MOUNTING

ANODIZED ALUMINIUM PIPE MOUNTING

DUAL SOLENOIDS

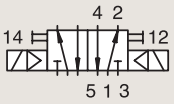

Port size	Orifice Ø	Flow factor	Operating Pressure Differential Min	Operating Pressure Differential Max(MOPD)		Fluid Temp. Min	Fluid Temp. Max	Seat Seal	Valve Ref.	Housing Ref.	Coil Ref.	ATEX Zone	Protection Mode	Power		Coil Group	Dwg. No.
BSP	mm	Qn l'min	bar	AC bar	DC bar	°C	°C							AC W	DC W		
1/2"	12	3000	2.5	10	10	-20	50	NBR	**347P04** [1]	-	**496131**	-	-	3	3	1.2	8224
	12	3000	2.5	10	10	-20	50	NBR	**347P04** [1]	-	**496482**	-	-	3	3	1.2	8224
	12	3000	2.5	10	10	-20	50	NBR	**347P04** [1]	-	**496637**	22	Ex tD A22 IP65 - T95°C	3	3	1.2	8224
	12	3000	2.5	10	10	-20	50	NBR	**347P34** [12]	-	**495905**	1-21	Ex db mb IIC T4	8	8	2.1	8225
	12	3000	2.5	10	10	-20	50	NBR	**347P34** [12]	**2995**	**495870**	2-22	Ex nc AC IIC T3/T4	8	9	2.1	8225
	12	3000	2.5	10	10	-20	50	NBR	**347P34** [12]	**2995**	**481865**	-	-	8	9	2.1	8225

Notes:
1.With manual override
2.Pilot seat in FKM

Tel: +45 63 12 83 00 | Email: ps@hymatik.com | www.hymatik.com | Hvidkaervej 27a, DK-5250 Odense SV, Denmark

For this page	Port size	Orifice (mm)	Qn (l/min)	MOPD (bar)	Fluid Temp (°C)	Amb Temp (°C)
From	1/2"	12	3000	10	-20	-20
To	1/2"	12	3000	10	50	50

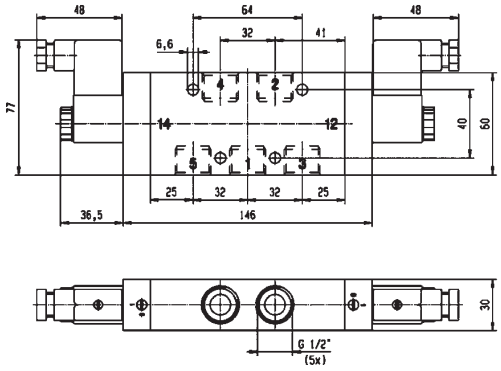



Drawing 8224

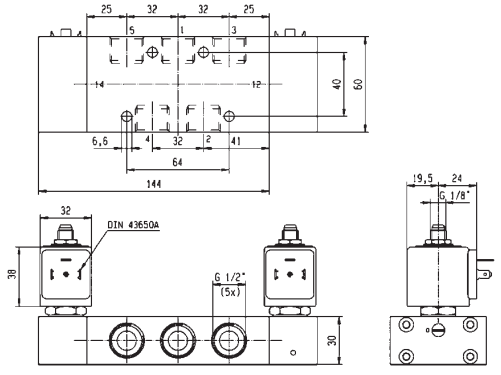



Drawing 8225

Parker Hannifin Corporation
Fluid Control Solutions Europe
Process Catalogue FCSE/1121/UK/V1.0

Tel: +45 63 12 83 00 | Email: ps@hymatik.com | www.hymatik.com | Hvidkaervej 27a, DK-5250 Odense SV, Denmark



3 AND 5 WAY VALVES PILOT OPERATED

P01-P02 SERIES - SPOOL VALVES FOR PIPE MOUNTING



3/2
5/2

Actuation	Body	Function	Port Size	Orifice (mm)	Flow Factor Qn(l/min)	MOPD (bar)	Max Fluid Temp. (°C)	Page
Pilot Operated	316L Stainless St./Pipe Mounting	Normally Closed	3/8"	8	1400	10	80	162
		Dual Solenoids	3/8"	8	1400	10	80	164
		Air operated - spring return	3/8"	8	1400	10	80	162
	Anodized Aluminium/Pipe Mounting	Normally Closed	1/8"	4 to 15	600	10	80	166
			1/4"	8	1400	10	80	170
		Control by Electric Impulse	1/8"	4	600	10	80	172
		Dual Solenoids	1/8"	4	600	10	80	172
			1/4"	8	1400	10	80	176

Tel: +45 63 12 83 00 | Email: ps@hymatik.com | www.hymatik.com | Hvidkaervej 27a, DK-5250 Odense SV, Denmark

3/2 5/2

3 AND 5 WAY VALVES PILOT OPERATED

P01-P02 SERIES - SPOOL VALVES FOR PIPE MOUNTING

316L STAINLESS ST. PIPE MOUNTING

NORMALLY CLOSED

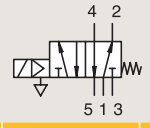

Port size	Orifice Ø	Flow factor	Operating Pressure Differential Min	Max(MOPD)		Fluid Temp. Min	Max	Seat Seal	Valve Ref.	Housing Ref.	Coil Ref.	ATEX Zone	Protection Mode	Power		Coil Group	Dwg. No.
	mm	Qn l'min	bar	AC bar	DC bar	°C	°C							AC W	DC W		
3/8" -1/4" NPT	8	1400	2	10	10	-25	80	NBR	U341P0250 1	-	482606	1-21	Ex mb IIC T4/T5	2	2.5	1.1	7558
	8	1400	2	10	10	-25	80	NBR	U341P0250 1	8993	488980	-	-	2	2.5	1.1	7558
	8	1400	2	10	10	-25	65	NBR	U341P3250 2	-	495905	1-21	Ex db mb IIC T4	8	8	2.1	8350
	8	1400	2	10	10	-25	60	NBR	U341P3250 2	2995	495870	2-22	Ex nc AC IIC T3/T4	8	9	2.1	8350
	8	1400	2	10	10	-25	80	NBR	U341P3250 2	2995	481865	-	-	8	9	2.1	8350
	8	1400	2	-	10	-25	75	NBR	U341P3295 1	-	496565	0-20	Ex ia IIB/IIC T4 to T6	-	0.3	9.0/10.1	8350
	8	1400	2	10	10	-25	65	NBR	U341P3295 1	-	496800	1-21	Ex db mb IIC T4	8	8	9.0/10.1	8350
	8	1400	2	10	10	-25	75	NBR	U341P3295 1	-	496895	-	-	8	8	9.0/10.1	8350

Notes:
1.With manual override
2.Pilot seat in FKM

316L STAINLESS ST. PIPE MOUNTING

AIR OPERATED - SPRING RETURN - W1

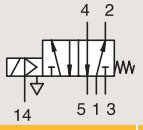

Port size	Orifice Ø	Flow factor	Operating Pressure Differential Min	Max(MOPD)		Fluid Temp. Min	Max	Seat Seal	Valve Ref.	Housing Ref.	Coil Ref.	ATEX Zone	Protection Mode	Power		Coil Group	Dwg. No.
	mm	Qn l'min	bar	AC bar	DC bar	°C	°C							AC W	DC W		
3/8"- 1/4" NPT	8	1400	2	10	10	-25	65	NBR	U441P3250 12	-	495905	1-21	Ex db mb IIC T4	8	8	2.1	7565
	8	1400	2	10	10	-25	60	NBR	U441P3250 12	2995	495870	2-22	Ex nc AC IIC T3/T4	8	9	2.1	7565
	8	1400	2	10	10	-25	80	NBR	U441P3250 12	2995	481865	-	-	8	9	2.1	7565

Notes:
1. Pilot seat in FKM
2. Valve with external pilot pressure minimum 4 bar

Tel: +45 63 12 83 00 | Email: ps@hymatik.com | www.hymatik.com | Hvidkaervej 27a, DK-5250 Odense SV, Denmark

For this page	Port size	Orifice (mm)	Qn (l/min)	MOPD (bar)	Fluid Temp (°C)	Amb Temp (°C)
From	3/8"	8	1400	10	-25	-25
To	3/8"	8	1400	10	80	50

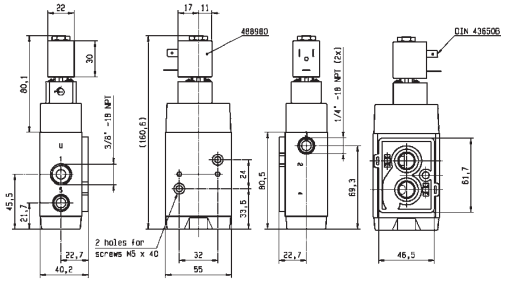



Drawing 7558

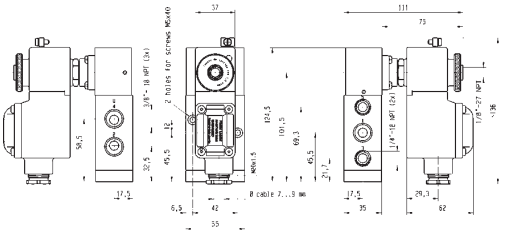



Drawing 8350

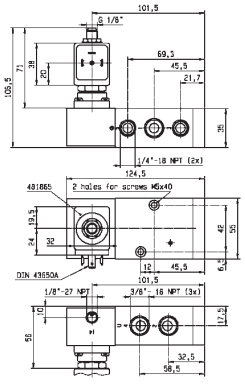



Drawing 7565

Tel: +45 63 12 83 00 | Email: ps@hymatik.com | www.hymatik.com | Hvidkaervej 27a, DK-5250 Odense SV, Denmark

3/2 5/2

3 AND 5 WAY VALVES PILOT OPERATED

P01-P02 SERIES - SPOOL VALVES FOR PIPE MOUNTING

316L STAINLESS ST.

PIPE MOUNTING

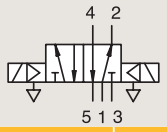

DUAL SOLENOIDS

Port size	Orifice Ø	Flow factor	Operating Pressure Differential Min	Operating Pressure Differential Max(MOPD) AC	Operating Pressure Differential Max(MOPD) DC	Fluid Temp. Min	Fluid Temp. Max	Seat Seal	Valve Ref.	Housing Ref.	Coil Ref.	ATEX Zone	Protection Mode	Power AC	Power DC	Coil Group	Dwg. No.
	mm	Qn l/min	bar	AC bar	DC bar	°C	°C							W	W		
3/8"-1/4" NPT	8	1400	2	10	10	-25	65	NBR	U347P3250 [2]	-	495905	1-21	Ex db mb IIC T4	8	8	2.1	7563
	8	1400	2	10	10	-25	60	NBR	U347P3250 [2]	2995	495870	2-22	Ex nc AC IIC T3/T4	8	9	2.1	7563
	8	1400	2	10	10	-25	80	NBR	U347P3250 [2]	2995	481865	-	-	8	9	2.1	7563
	8	1400	2	-	10	-25	75	NBR	U347P3295 [12]	-	496565	0-20	Ex ia IIB/IIC T4 to T6	-	0.3	9.0/10.1/10.2	8351
	8	1400	2	10	10	-25	75	NBR	U347P3295 [12]	-	492310	1-21	Ex mb II T4 to T5	6	6	9.0/10.1/10.2	7564
	8	1400	2	10	10	-25	65	NBR	U347P3295 [12]	-	496800	1-21	Ex db mb IIC T4	8	8	9.0/10.1/10.2	8351
	8	1400	2	-	10	-25	75	NBR	U347P3295 [12]	-	492210	1-21	Ex eb mb IIC T5 to T6	-	1 to 1.8	9.0/10.1/10.2	7564
	8	1400	2	10	10	-25	65	NBR	U347P3295 [12]	-	496560	1-21	Ex db mb IIC T4	8	8	9.0/10.1/10.2	8351
	8	1400	2	10	10	-25	75	NBR	U347P3295 [12]	-	496895	-	-	8	8	9.0/10.1/10.2	8351

Notes:
1.With manual override
2.Pilot seat in FKM

For this page	Port size	Orifice (mm)	Qn (l/min)	MOPD (bar)	Fluid Temp (°C)	Amb Temp (°C)
From	3/8"	8	1400	10	-25	-25
To	3/8"	8	1400	10	80	50

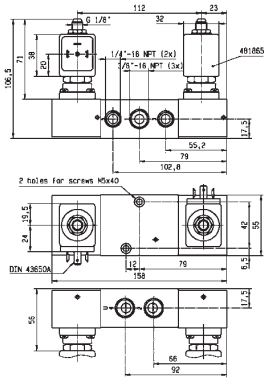



Drawing 7563

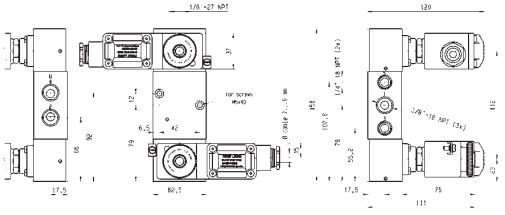



Drawing 8351

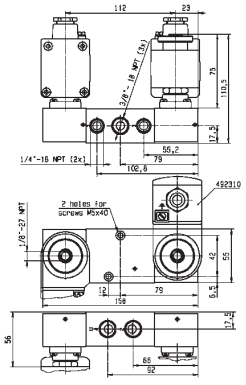

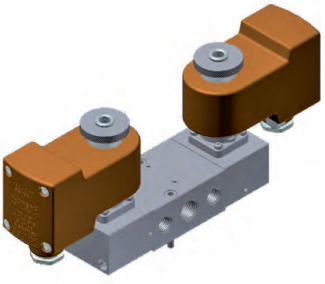

Drawing 7564

Parker Hannifin Corporation
Fluid Control Solutions Europe
Process Catalogue FCSE/1121/UK/V1.0

3/2 5/2

3 AND 5 WAY VALVES PILOT OPERATED

P01-P02 SERIES - SPOOL VALVES FOR PIPE MOUNTING

ANODIZED ALUMINIUM PIPE MOUNTING

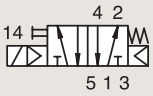

NORMALLY CLOSED

Port size	Orifice Ø	Flow factor	Operating Pressure Differential Min	Operating Pressure Differential Max(MOPD)		Fluid Temp. Min	Fluid Temp. Max	Seat Seal	Valve Ref.	Housing Ref.	Coil Ref.	ATEX Zone	Protection Mode	Power		Coil Group	Dwg. No.
BSP	mm	Qn l'min	bar	AC bar	DC bar	°C	°C							AC W	DC W		
	4	600	2	10	10	-25	50	NBR	**341P01** [12]	**-**	**482606**	1-21	Ex mb IIC T4/T5	2	2.5	1.1	7302
	4	600	2	10	10	-25	80	NBR	**341P01** [12]	**8993**	**488980**	-	-	2	2.5	1.1	7302
	4	600	2	10	10	-25	65	NBR	**341P21** [12]	**-**	**495905**	1-21	Ex db mb IIC T4	8	8	2.1	7296
1/8"	4	600	2	10	10	-25	60	NBR	**341P21** [12]	**2995**	**495870**	2-22	Ex nc AC IIC T3/T4	8	9	2.1	7296
	4	600	2	10	10	-25	80	NBR	**341P21** [12]	**2995**	**481865**	-	-	8	9	2.1	7296
	4	600	2	10	10	-40	65	NBR	**341P2108** [3]	**-**	**495905**	1-21	Ex db mb IIC T4	8	8	2.1	7296
	4	600	2	10	10	-40	60	NBR	**341P2108** [3]	**2995**	**495870**	2-22	Ex nc AC IIC T3/T4	8	9	2.1	7296
	4	600	2	10	10	-40	65	NBR	**341P2108** [3]	**2995**	**481865**	-	-	8	9	2.1	7296

Notes:
1.With manual override
2.Pilot seat in FKM
3. Pilot seat in PUR

Tel: +45 63 12 83 00 | Email: ps@hymatik.com | www.hymatik.com | Hvidkaervej 27a, DK-5250 Odense SV, Denmark

For this page	Port size	Orifice (mm)	Qn (l/min)	MOPD (bar)	Fluid Temp (°C)	Amb Temp (°C)
From	1/8"	4	600	10	-40	-40
To	1/8"	4	600	10	80	50

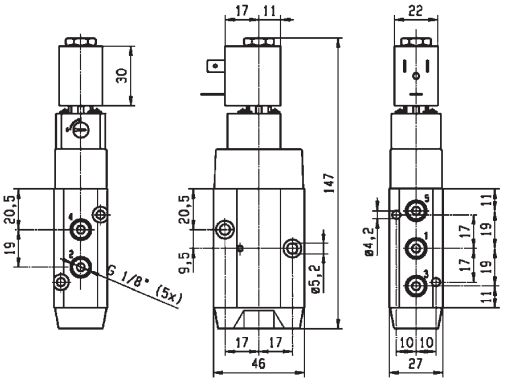



Drawing 7302

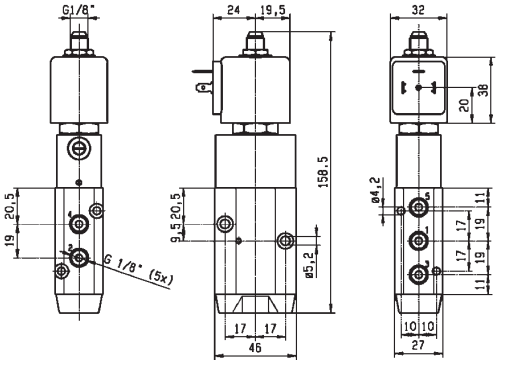



Drawing 7296

Parker Hannifin Corporation
Fluid Control Solutions Europe
Process Catalogue FCSE/1121/UK/V1.0

3/2 5/2

3 AND 5 WAY VALVES PILOT OPERATED

P01-P02 SERIES - SPOOL VALVES FOR PIPE MOUNTING

ANODIZED ALUMINIUM PIPE MOUNTING

NORMALLY CLOSED

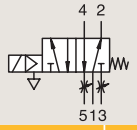

Port size	Orifice Ø	Flow factor	Operating Pressure Differential			Fluid Temp.		Seat Seal	Valve Ref.	Housing Ref.	Coil Ref.	ATEX Zone	Protection Mode	Power		Coil Group	Dwg. No.
			Min	Max(MOPD)		Min	Max										
BSP	mm	Qn l'min	bar	AC bar	DC bar	°C	°C							AC W	DC W		
1/8"	4	600	2	-	10	-20	65	NBR	341P2197 [12]	-	495910	0-20	Ex ia IIC T4 to T6	-	0.3 to 3	6.0/7.0/8.0	8027
	4	600	2	10	10	-20	65	NBR	341P2197 [12]	-	495900	1-21	Ex db mb IIC T4 to T6	2.5	2	6.0/7.0/8.0	8027
	4	600	2	-	10	-20	65	NBR	341P2197 [12]	2995	496125	2-22	Ex nAC IIC T5/T6	-	1.6	6.0/7.0/8.0	8027
	4	600	2	-	10	-20	65	NBR	341P2197 [12]	2995	482740	-	-	-	1.6	6.0/7.0/8.0	8027
	4	600	2	-	10	-10	55	NBR	341P2190	2995	483580.01	0-20	Ex ia IIC T6	-	0.5 to 3	6.0/7.0/8.0	7351
	4	600	2	-	10	-10	65	NBR	341P2190	-	495910	0-20	Ex ia IIC T4 to T6	-	0.3 to 3	6.0/7.0/8.0	7351
	4	600	2	10	10	-10	65	NBR	341P2190	-	495900	1-21	Ex db mb IIC T4 to T6	2.5	2	6.0/7.0/8.0	7351

Notes:
1. With manual override
2. Pilot seat in PUR

Tel: +45 63 12 83 00 | Email: ps@hymatik.com | www.hymatik.com | Hvidkaervej 27a, DK-5250 Odense SV, Denmark

IECEx certified

For this page	Port size	Orifice (mm)	Qn (l/min)	MOPD (bar)	Fluid Temp (°C)	Amb Temp (°C)
From	1/8"	4	600	10	-20	-25
To	1/8"	15	600	10	65	65

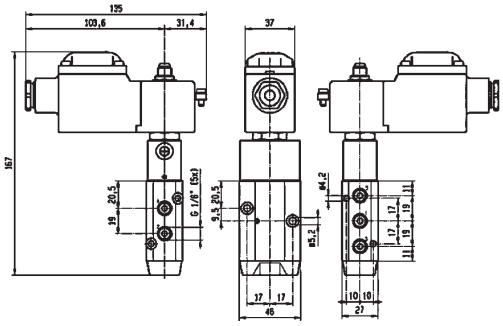



Drawing 8027

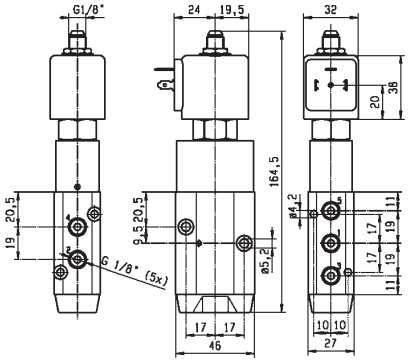



Drawing 7351

Parker Hannifin Corporation
Fluid Control Solutions Europe
Process Catalogue FCSE/1121/UK/V1.0

3/2 5/2

3 AND 5 WAY VALVES PILOT OPERATED

P01-P02 SERIES - SPOOL VALVES FOR PIPE MOUNTING

ANODIZED ALUMINIUM PIPE MOUNTING

NORMALLY CLOSED

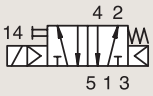

Port size	Orifice Ø	Flow factor	Operating Pressure Differential Min	Operating Pressure Differential Max(MOPD) AC	Operating Pressure Differential Max(MOPD) DC	Fluid Temp. Min	Fluid Temp. Max	Seat Seal	Valve Ref.	Housing Ref.	Coil Ref.	ATEX Zone	Protection Mode	Power AC	Power DC	Coil Group	Dwg. No.
BSP	mm	Qn l'min	bar	bar	bar	°C	°C							W	W		
	8	1400	2	10	10	-25	50	NBR	**341P02** [1]	**-**	**482606**	1-21	Ex mb IIC T4/T5	2	2.5	1.1	7314
	8	1400	2	10	10	-25	80	NBR	**341P02** [1]	**8993**	**488980**	-	-	2	2.5	1.1	7314
	8	1400	2	10	10	-25	65	NBR	**341P22** [12]	**-**	**495905**	1-21	Ex db mb IIC T4	8	8	2.1	8030
	8	1400	2	10	10	-25	60	NBR	**341P22** [12]	**2995**	**495870**	2-22	Ex nc AC IIC T3/T4	8	9	2.1	7319
	8	1400	2	10	10	-25	80	NBR	**341P22** [12]	**2995**	**481865**	-	-	8	9	2.1	7319
1/4"	8	1400	2	-	10	-25	55	NBR	**341P2290**	**2995**	**483580.01**	0-20	Ex ia IIC T6	-	0.5 to 3	6.0/7.0/8.0	7352
	8	1400	2	-	10	-25	65	NBR	**341P2290**	**-**	**495910**	0-20	Ex ia IIC T4 to T6	-	0.3 to 3	6.0/7.0/8.0	7352
	8	1400	2	10	10	-25	65	NBR	**341P2290**	**-**	**495900**	1-21	Ex db mb IIC T4 to T6	2.5	2	6.0/7.0/8.0	7352
	8	1400	2	-	10	-20	65	NBR	**341P2297** [13]	**-**	**495910**	0-20	Ex ia IIC T4 to T6	-	0.3 to 3	6.0/8.0	8030
	8	1400	2	10	10	-20	65	NBR	**341P2297** [13]	**-**	**495900**	1-21	Ex db mb IIC T4 to T6	2.5	2	6.0/8.0	8030
	8	1400	2	-	10	-20	65	NBR	**341P2297** [13]	**2995**	**496125**	2-22	Ex nAC IIC T5/T6	-	1.6	6.0/8.0	7319
	8	1400	2	-	10	-20	80	NBR	**341P2297** [13]	**2995**	**482740**	-	-	-	1.6	6.0/8.0	7319

Notes:
1. With manual override
2. Pilot seat in FKM
3. Pilot seat in PUR

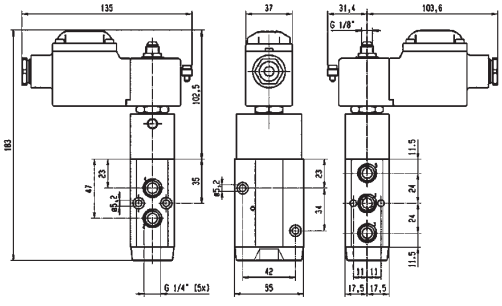



Drawing 8030

Parker Hannifin Corporation
Fluid Control Solutions Europe
Process Catalogue FCSE/1121/UK/V1.0

For this page	Port size	Orifice (mm)	Qn (l/min)	MOPD (bar)	Fluid Temp (°C)	Amb Temp (°C)
From	1/4"	8	1400	10	-25	-25
To	1/4"	8	1400	10	80	50

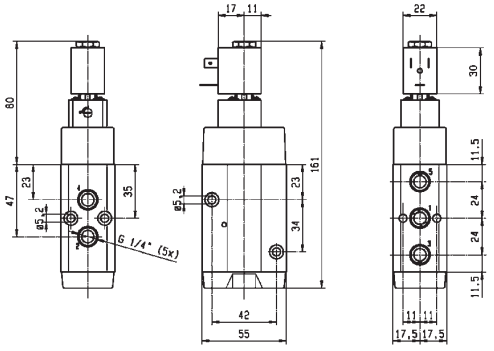



Drawing 7314

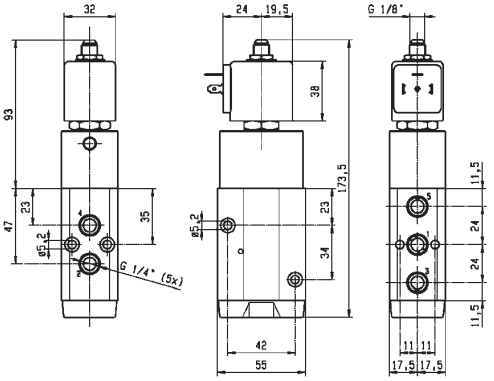



Drawing 7319

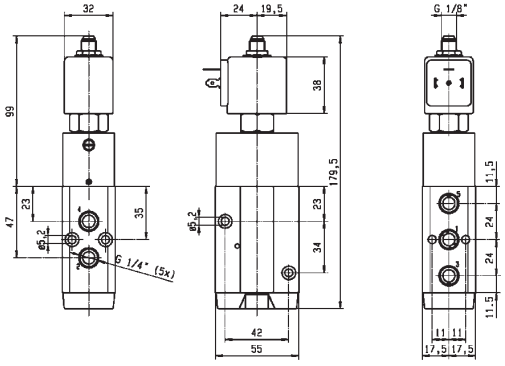



Drawing 7352

Parker Hannifin Corporation
Fluid Control Solutions Europe
Process Catalogue FCSE/1121/UK/V1.0

3/2 5/2

3 AND 5 WAY VALVES PILOT OPERATED

P01-P02 SERIES - SPOOL VALVES FOR PIPE MOUNTING

ANODIZED ALUMINIUM PIPE MOUNTING

CONTROL BY ELECTRIC IMPULSE

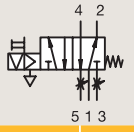

Port size	Orifice Ø	Flow factor	Operating Pressure Differential Min	Max(MOPD)		Fluid Temp. Min	Max	Seat Seal	Valve Ref.	Housing Ref.	Coil Ref.	ATEX Zone	Protection Mode	Power		Coil Group	Dwg. No.
BSP	mm	Qn l'min	bar	AC bar	DC bar	°C	°C							AC W	DC W		
1/8"	4	600	2	10	-	-25	80	NBR	345P21	4269	484990	-	-	11	-	4.0	8123
	4	600	2	-	10	-25	80	NBR	345P21	4269	485400	-	-	-	13	4.0	8123

ANODIZED ALUMINIUM PIPE MOUNTING

DUAL SOLENOIDS

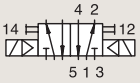

Port size	Orifice Ø	Flow factor	Operating Pressure Differential Min	Max(MOPD)		Fluid Temp. Min	Max	Seat Seal	Valve Ref.	Housing Ref.	Coil Ref.	ATEX Zone	Protection Mode	Power		Coil Group	Dwg. No.
BSP	mm	Qn l'min	bar	AC bar	DC bar	°C	°C							AC W	DC W		
1/8"	4	400	2	10	10	-25	50	NBR	347P01 [12]	-	482606	1-21	Ex mb IIC T4/T5	2	2.5	1.1	7306
	4	400	2	10	10	-25	80	NBR	347P01 [12]	8993	488980	-	-	2	2.5	1.1	7306
	4	400	2	10	10	-25	65	NBR	347P21 [12]	-	495905	1-21	Ex db mb IIC T4	8	8	2.1	7298
	4	400	2	10	10	-25	60	NBR	347P21 [12]	2995	495870	2-22	Ex nc AC IIC T3/T4	8	9	2.1	7298
	4	400	2	10	10	-25	80	NBR	347P21 [12]	2995	481865	-	-	8	9	2.1	7298

Notes:
1.With manual override
2.Pilot seat in FKM

Tel: +45 63 12 83 00 | Email: ps@hymatik.com | www.hymatik.com | Hvidkaervej 27a, DK-5250 Odense SV, Denmark

IECEx certified

For this page	Port size	Orifice (mm)	Qn (l/min)	MOPD (bar)	Fluid Temp (°C)	Amb Temp (°C)
From	1/8"	4	400	10	-25	-25
To	1/8"	4	600	10	80	50

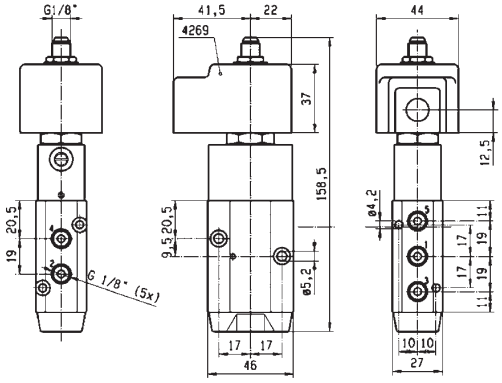



Drawing 8123

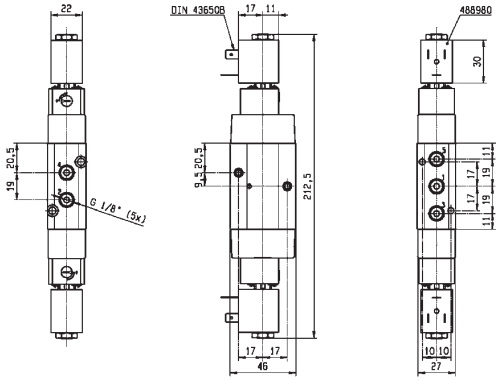

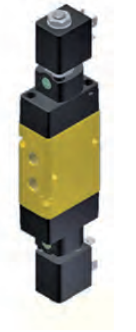

Drawing 7306

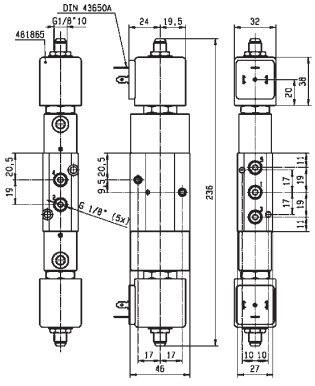



Drawing 7298

Parker Hannifin Corporation
Fluid Control Solutions Europe
Process Catalogue FCSE/1121/UK/V1.0

Tel: +45 63 12 83 00 | Email: ps@hymatik.com | www.hymatik.com | Hvidkaervej 27a, DK-5250 Odense SV, Denmark

3/2 5/2

3 AND 5 WAY VALVES PILOT OPERATED

P01-P02 SERIES - SPOOL VALVES FOR PIPE MOUNTING

ANODIZED ALUMINIUM PIPE MOUNTING

DUAL SOLENOIDS

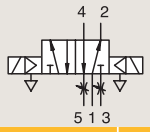

Port size	Orifice Ø	Flow factor	Operating Pressure Differential Min	Operating Pressure Differential Max(MOPD)		Fluid Temp. Min	Fluid Temp. Max	Seat Seal	Valve Ref.	Housing Ref.	Coil Ref.	ATEX Zone	Protection Mode	Power		Coil Group	Dwg. No.
BSP	mm	Qn l'min	bar	AC bar	DC bar	°C	°C							AC W	DC W		
1/8"	4	400	2	-	10	-25	55	NBR	347P2190 [2]	2995	483580.01	0-20	Ex ia IIC T6	-	0.5 to 3	6.0/7.0/8.0	7353
	4	400	2	-	10	-25	65	NBR	347P2190 [2]	-	495910	0-20	Ex ia IIC T4 to T6	-	0.3 to 3	6.0/7.0/8.0	7353
	4	400	2	10	10	-25	65	NBR	347P2190 [2]	-	495900	1-21	Ex db mb IIC T4 to T6	2.5	2	6.0/7.0/8.0	7353
	4	400	2	-	10	-25	65	NBR	347P2197 [1]	-	495910	0-20	Ex ia IIC T4 to T6	-	0.3 to 3	6.0/8.0	8028
	4	400	2	10	10	-25	65	NBR	347P2197 [1]	-	495900	1-21	Ex db mb IIC T4 to T6	2.5	2	6.0/8.0	8028
	4	400	2	-	10	-25	65	NBR	347P2197 [1]	2995	496125	2-22	Ex nAC IIC T5/T6	-	1.6	6.0/8.0	8028
	4	400	2	-	10	-25	65	NBR	347P2197 [1]	2995	482740	-	-	-	1.6	6.0/8.0	8028

Notes:
1. With manual override
2. Pilot seat in FKM

Tel: +45 63 12 83 00 | Email: ps@hymatik.com | www.hymatik.com | Hvidkaervej 27a, DK-5250 Odense SV, Denmark

IECEx certified

For this page	Port size	Orifice (mm)	Qn (l/min)	MOPD (bar)	Fluid Temp (°C)	Amb Temp (°C)
From	1/8"	4	400	10	-25	-25
To	1/8"	4	400	10	65	50

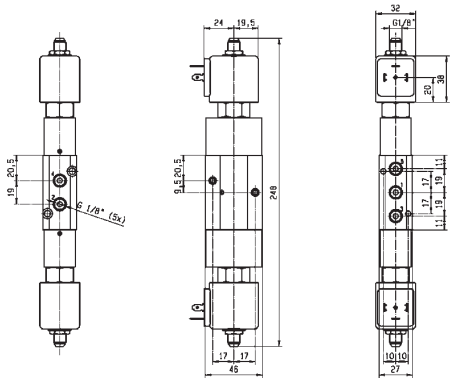

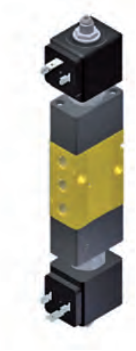

Drawing 7353

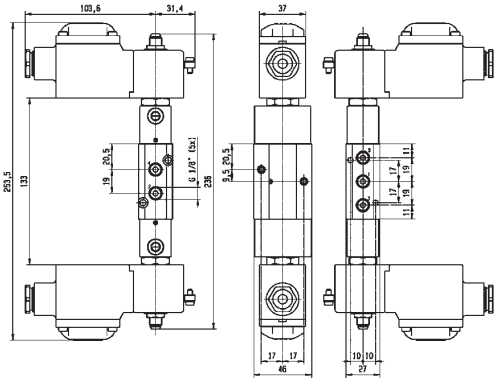



Drawing 8028

Parker Hannifin Corporation
Fluid Control Solutions Europe
Process Catalogue FCSE/1121/UK/V1.0

3/2 5/2

3 AND 5 WAY VALVES PILOT OPERATED

P01-P02 SERIES - SPOOL VALVES FOR PIPE MOUNTING

ANODIZED ALUMINIUM PIPE MOUNTING

DUAL SOLENOIDS

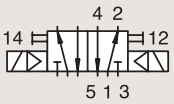

Port size	Orifice Ø	Flow factor	Operating Pressure Differential Min	Operating Pressure Differential Max(MOPD) AC	Operating Pressure Differential Max(MOPD) DC	Fluid Temp. Min	Fluid Temp. Max	Seat Seal	Valve Ref.	Housing Ref.	Coil Ref.	ATEX Zone	Protection Mode	Power AC	Power DC	Coil Group	Dwg. No.
BSP	mm	Qn l'min	bar	bar	bar	°C	°C							W	W		
1/4"	8	1400	2	10	10	-25	50	NBR	347P02 [1]	-	482606	1-21	Ex mb IIC T4/T5	2	2.5	1.1	7316
	8	1400	2	10	10	-25	80	NBR	347P02 [1]	8993	488980	-	-	2	2.5	1.1	7316
	8	1400	2	10	10	-25	65	NBR	347P22 [12]	-	495905	1-21	Ex db mb IIC T4	8	8	2.1	7321
	8	1400	2	10	10	-25	60	NBR	347P22 [12]	2995	495870	2-22	Ex nc AC IIC T3/T4	8	9	2.1	7321
	8	1400	2	10	10	-25	80	NBR	347P22 [12]	2995	481865	-	-	8	9	2.1	7321

Notes:
1. With manual override
2. Pilot seat in FKM

Tel: +45 63 12 83 00 | Email: ps@hymatik.com | www.hymatik.com | Hvidkaervej 27a, DK-5250 Odense SV, Denmark

For this page	Port size	Orifice (mm)	Qn (l/min)	MOPD (bar)	Fluid Temp (°C)	Amb Temp (°C)
From	1/4"	8	1400	10	-25	-25
To	1/4"	8	1400	10	80	50

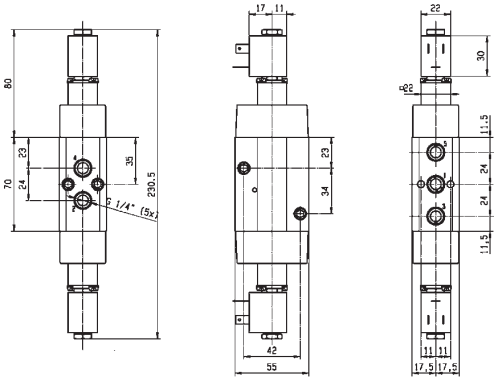

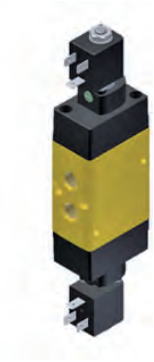

Drawing 7316

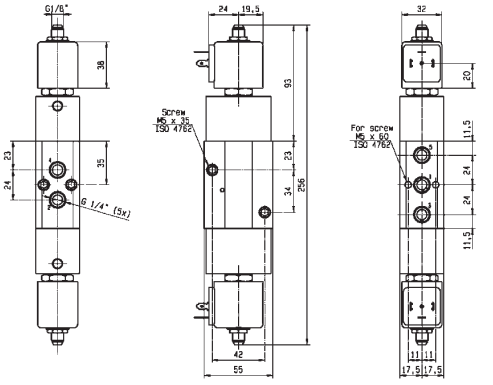



Drawing 7321

Tel: +45 63 12 83 00 | Email: ps@hymatik.com | www.hymatik.com | Hvidkaervej 27a, DK-5250 Odense SV, Denmark

Tel: +45 63 12 83 00 | Email: ps@hymatik.com | www.hymatik.com | Hvidkaervej 27a, DK-5250 Odense SV, Denmark



3 AND 5 WAY VALVES PILOT OPERATED

U331SERIES - HIGH FLOW LARGE POPPET VALVES FOR PIPE MOUNTING



3/2

Actuation	Body	Function	Port Size	Orifice (mm)	Flow Factor Qn(l/min)	MOPD (bar)	Max Fluid Temp. (°C)	Page
Pilot Operated	**Brass/Pipe Mounting**	**Normally Closed**	1/2''	14	2500	15	65	**180**
Pilot Operated	**316L/Pipe Mounting**	**Normally Closed**	1/2''	14	2500	15	65	**182**

Tel: +45 63 12 83 00 | Email: ps@hymatik.com | www.hymatik.com | Hvidkaervej 27a, DK-5250 Odense SV, Denmark

3/2 3 AND 5 WAY VALVES PILOT OPERATED

U331BS SERIES - HIGH FLOW BRASS POPPET VALVES FOR PIPE MOUNTING

BRASS
PIPE MOUNTING
NORMALLY CLOSED

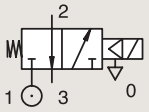

Port size	Orifice Ø	Flow factor	Operating Pressure Differential Min	Max(MOPD)		Fluid Temp. Min	Max	Seat Seal	Valve Ref.	Housing Ref.	Coil Ref.	ATEX Zone	Protection Mode	Power		Coil Group	Dwg. No.
	mm	Qn l/min	bar	AC bar	DC bar	°C	°C							AC W	DC W		
1/2" NPTF	14	2500	2	-	15	-30	65	NBR	U331BS9369	-	496565	0-20	Ex ia IIB/IIC T4 to T6	-	0.3	9.0/10.1/10.2	8316
	14	2500	2	15	15	-30	65	NBR	U331BS9369	-	496700	1-21	Ex db mb IIC T4 to T6	6	6	9.0/10.1/10.2	8316
	14	2500	2	-	15	-30	65	NBR	U331BS9369	-	492210	1-21	Ex eb mb IIC T5 to T6	-	1 to 1.8	9.0/10.1/10.2	8316
	14	2500	2	15	15	-30	65	NBR	U331BS9369	-	492310	1-21	Ex mb II T4 to T5	6	6	9.0/10.1/10.2	8316
	14	2500	2	15	15	-30	65	NBR	U331BS9369	-	496555	1-21	Ex db mb IIC T4 to T6	6	6	9.0/10.1/10.2	8316
	14	2500	2	15	15	-30	65	NBR	U331BS9369	-	496895	-	-	8	8	9.0/10.1/10.2	8316

Tel: +45 63 12 83 00 | Email: ps@hymatik.com | www.hymatik.com | Hvidkaervej 27a, DK-5250 Odense SV, Denmark

IECEx certified

For this page	Port size	Orifice (mm)	Qn (l/min)	MOPD (bar)	Fluid Temp (°C)	Amb Temp (°C)
From	1/2''	14	2500	15	-30	-30
To	1/2''	14	2500	15	65	65

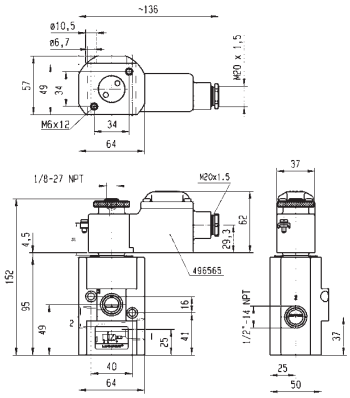



Drawing 8316

Parker Hannifin Corporation
Fluid Control Solutions Europe
Process Catalogue FCSE/1121/UK/V1.0

3/2 3 AND 5 WAY VALVES PILOT OPERATED

U331X SERIES - HIGH FLOW BRASS POPPET VALVES FOR PIPE MOUNTING

STAINLESS ST. PIPE MOUNTING

NORMALLY CLOSED

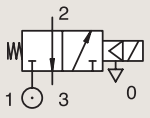

Port size	Orifice Ø	Flow factor	Operating Pressure Differential Min	Max(MOPD)		Fluid Temp. Min	Max	Seat Seal	Valve Ref.	Housing Ref.	Coil Ref.	ATEX Zone	Protection Mode	Power		Coil Group	Dwg. No.
	mm	Qn l'min	bar	AC bar	DC bar	°C	°C							AC W	DC W		
1/2" NPT	14	2500	3	-15	15	-30	65	VMQ	U331X2309$_1$	-	496895	-	-	8	8	9.0/10.1/10.2/10.3	8315
	14	2500	3	15	15	-30	65	VMQ	U331X2309$_1$	-	497105	1-21	Ex db IIC T4 to T6	8	8	9.0/10.1/10.2/10.3	8316
	14	2500	3	15	15	-30	65	VMQ	U331X2309$_1$	-	496700	1-21	Ex db mb IIC T4 to T6	6	6	9.0/10.1/10.2/10.3	8359
	14	2500	3	15	15	-30	65	VMQ	U331X2309$_1$	-	492310	1-21	Ex mb II T4 to T5	9	8	9.0/10.1/10.2/10.3	8360
	14	2500	3	15	15	-30	65	VMQ	U331X2309$_1$	-	496555	1-21	Ex db mb IIC T4 to T6	6	6	9.0/10.1/10.2/10.3	8317
	14	2500	3	15	15	-30	65	VMQ	U331X2309$_1$	-	496565	0-20	Ex ia IIB/IIC T4 to T6	-	0.3	9.0/10.1/10.2/10.3	8317

Notes:

1. Valve delivered with an individual material traceability certificate (3.1 following EN10204)

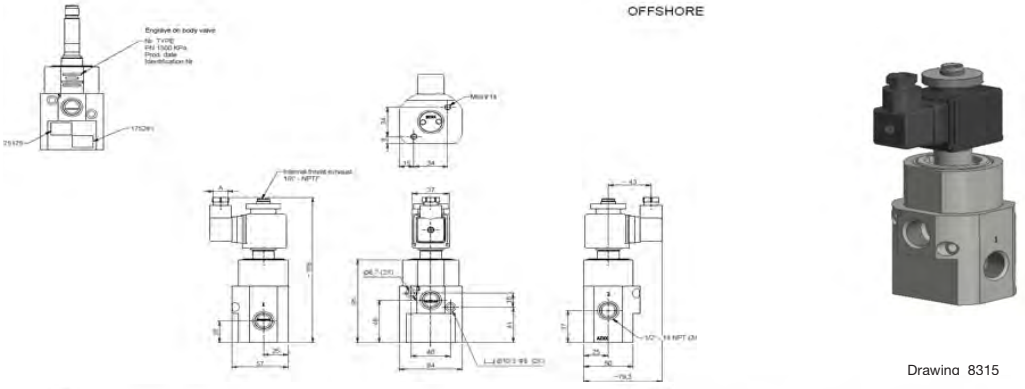

Drawing 8315

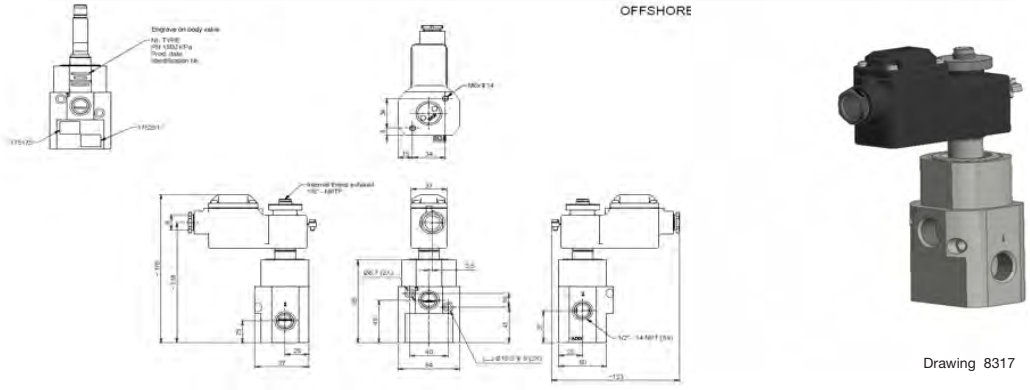

Drawing 8317

IECEx certified

For this page	Port size	Orifice (mm)	Qn (l/min)	MOPD (bar)	Fluid Temp (°C)	Amb Temp (°C)
From	1/2''	14	2500	15	-30	-30
To	1/2''	14	2500	15	65	65

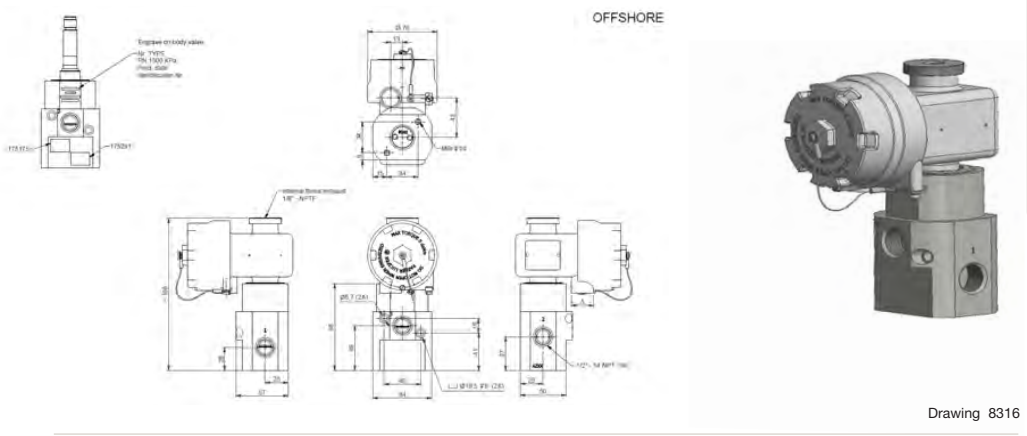

Drawing 8316

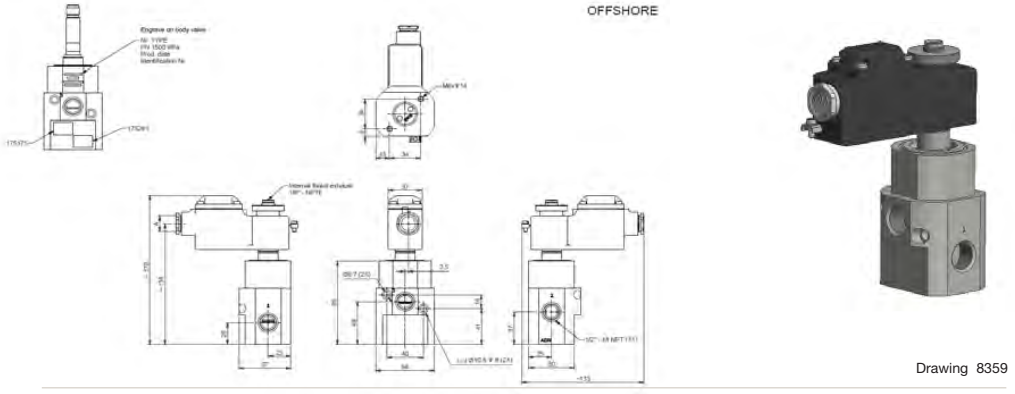

Drawing 8359

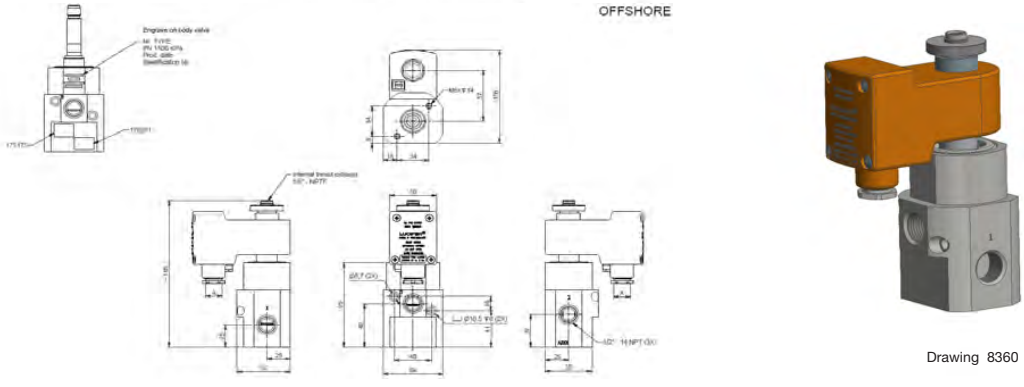

Drawing 8360

Tel: +45 63 12 83 00 | Email: ps@hymatik.com | www.hymatik.com | Hvidkaervej 27a, DK-5250 Odense SV, Denmark

Tel: +45 63 12 83 00 | Email: ps@hymatik.com | www.hymatik.com | Hvidkaervej 27a, DK-5250 Odense SV, Denmark



3 AND 5 WAY VALVES NAMUR DIRECT OPERATED

X SERIES - ALUMINIUM, STAINLESS STEEL VALVES WITH NAMUR INTERFACE



3/2
5/2

Actuation	Body	Function	Port Size	Orifice (mm)	Flow Factor Qn(l/min)	MOPD (bar)	Max Fluid Temp. (°C)	Page
Direct Operated	316L Stainless St./NAMUR	Normally Closed	3/8"	6	680	12	65	186
	Anodized Aluminium/NAMUR	Normally Closed	1/4"	6	680	12	75	188

3/2 5/2

3 AND 5 WAY VALVES NAMUR DIRECT OPERATED

X SERIES - ALUMINIUM, STAINLESS STEEL VALVES WITH NAMUR INTERFACE

316L STAINLESS ST.

NAMUR

NORMALLY CLOSED

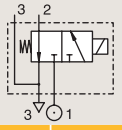

Port size	Orifice Ø	Flow factor	Operating Pressure Differential Min	Operating Pressure Differential Max(MOPD)		Fluid Temp. Min	Fluid Temp. Max	Seat Seal	Valve Ref.	Housing Ref.	Coil Ref.	ATEX Zone	Protection Mode	Power		Coil Group	Dwg. No.
	mm	Qn l'/min	bar	AC bar	DC bar	°C	°C							AC W	DC W		
3/8" NPT	6	680	0	-	12	-25	65	NBR	U131X1201 [1]	-	496565	0-20	Ex ia IIB/IIC T4 to T6	-	0.3	9.0/10.1/10.2	8352
	6	680	0	12	12	-25	65	NBR	U131X1201 [1]	-	492310	1-21	Ex mb II T4 to T5	6	6	9.0/10.1/10.2	7668
	6	680	0	12	12	-25	65	NBR	U131X1201 [1]	-	496700	1-21	Ex db mb IIC T4 to T6	6	6	9.0/10.1/10.2	8352
	6	680	0	-	12	-25	65	NBR	U131X1201 [1]	-	492210	1-21	Ex eb mb IIC T5 to T6	-	1 to 1.8	9.0/10.1/10.2	7668
	6	680	0	12	12	-25	65	NBR	U131X1201 [1]	-	496555	1-21	Ex db mb IIC T4 to T6	6	6	9.0/10.1/10.2	8352
	6	680	0	12	12	-25	50	NBR	U131X1201 [1]	-	496895	-	-	8	8	9.0/10.1/10.2	7668

Notes:
1.Valve delivered with an individual material traceability certificate (3.1 following EN10204)

Tel: +45 63 12 83 00 | Email: ps@hymatik.com | www.hymatik.com | Hvidkaervej 27a, DK-5250 Odense SV, Denmark

For this page	Port size	Orifice (mm)	Qn (l/min)	MOPD (bar)	Fluid Temp (°C)	Amb Temp (°C)
From	3/8"	6	680	12	-25	-25
To	3/8"	6	680	12	65	65

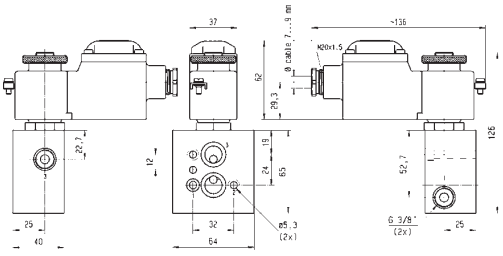



Drawing 8352

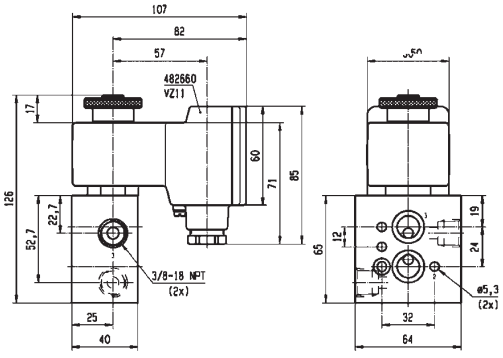

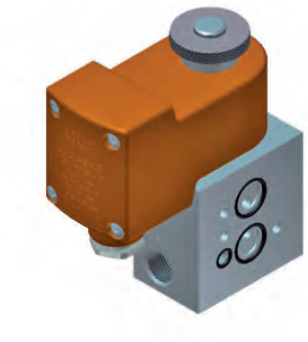

Drawing 7668

3/2 5/2

3 AND 5 WAY VALVES NAMUR DIRECT OPERATED

X SERIES - ALUMINIUM, STAINLESS STEEL VALVES WITH NAMUR INTERFACE

ANODIZED ALUMINIUM NAMUR

NORMALLY CLOSED

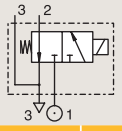

Port size	Orifice Ø	Flow factor	Operating Pressure Differential Min	Operating Pressure Differential Max(MOPD)		Fluid Temp. Min	Fluid Temp. Max	Seat Seal	Valve Ref.	Housing Ref.	Coil Ref.	ATEX Zone	Protection Mode	Power		Coil Group	Dwg. No.
BSP	mm	Qn l/min	bar	AC bar	DC bar	°C	°C							AC W	DC W		
1/4"	6	680	0	-	12	-25	65	NBR	131X1101	-	496565	0-20	Ex ia IIB/IIC T4 to T6	-	0.3	9.0/10.1/10.2	8346
	6	680	0	12	12	-25	65	NBR	131X1101	-	496700	1-21	Ex db mb IIC T4 to T6	6	6	9.0/10.1/10.2	8346
	6	680	0	12	12	-25	75	NBR	131X1101	-	492310	1-21	Ex mb II T4 to T5	6	6	9.0/10.1/10.2	8346
	6	680	0	-	12	-25	75	NBR	131X1101	-	492210	1-21	Ex eb mb IIC T5 to T6	-	1 to 1.8	9.0/10.1/10.2	8346
	6	680	0	12	12	-25	65	NBR	131X1101	-	496555	1-21	Ex db mb IIC T4 to T6	6	6	9.0/10.1/10.2	8346
	6	680	0	12	12	-25	50	NBR	131X1101	-	496895	-	-	8	8	9.0/10.1/10.2	8346
	6	680	0	-	12	-25	65	NBR	131X1131	-	496565	0-20	Ex ia IIB/IIC T4 to T6	-	0.3	9.0/10.1/10.2	8346
	6	680	0	12	12	-25	65	NBR	131X1131	-	496555	1-21	Ex db mb IIC T4 to T6	6	6	9.0/10.1/10.2	8346
	6	680	0	12	12	-25	65	NBR	131X1131	-	496700	1-21	Ex db mb IIC T4 to T6	6	6	9.0/10.1/10.2	8346
	6	680	0	12	12	-25	65	NBR	131X1131	-	492310	1-21	Ex mb II T4 to T5	6	6	9.0/10.1/10.2	8346
	6	680	0	-	12	-25	65	NBR	131X1131	-	492210	1-21	Ex eb mb IIC T5 to T6	-	1 to 1.8	9.0/10.1/10.2	8346
	6	680	0	12	12	-25	50	NBR	131X1131	-	496895	-	-	8	8	9.0/10.1/10.2	8346
1/4" NPT	6	680	0	-	12	-25	55	NBR	U131X1101	-	496565	0-20	Ex ia IIB/IIC T4 to T6	-	0.3	9.0/10.1/10.2	8353
	6	680	0	12	12	-25	65	NBR	U131X1101	-	496555	1-21	Ex db mb IIC T4 to T6	6	6	9.0/10.1/10.2	8353
	6	680	0	12	12	-25	65	NBR	U131X1101	-	496700	1-21	Ex db mb IIC T4 to T6	6	6	9.0/10.1/10.2	8353
	6	680	0	12	12	-25	65	NBR	U131X1101	-	492310	1-21	Ex mb II T4 to T5	6	6	9.0/10.1/10.2	7336
	6	680	0	-	12	-25	65	NBR	U131X1101	-	492210	1-21	Ex eb mb IIC T5 to T6	-	1 to 1.8	9.0/10.1/10.2	7336
	6	680	0	12	12	-25	50	NBR	U131X1101	-	496895	-	-	8	8	9.0/10.1/10.2	8353

For this page	Port size	Orifice (mm)	Qn (l/min)	MOPD (bar)	Fluid Temp (°C)	Amb Temp (°C)
From	1/4"	6	680	12	-25	-25
To	1/4"	6	680	12	65	65

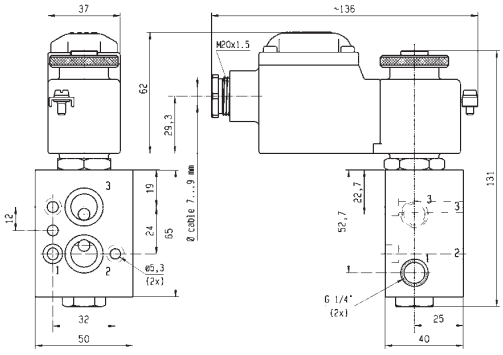



Drawing 8346

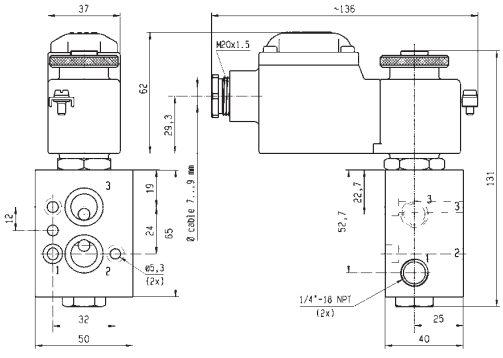



Drawing 8353

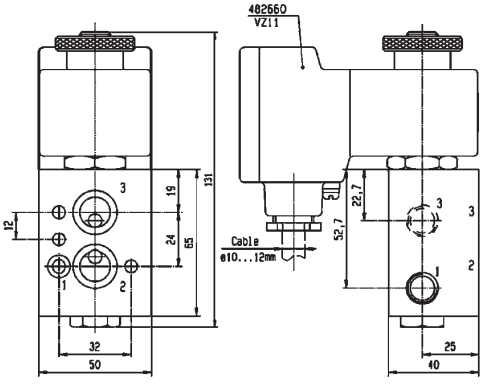

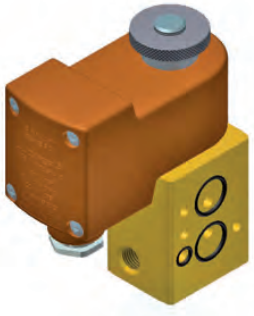

Drawing 7336

Parker Hannifin Corporation
Fluid Control Solutions Europe
Process Catalogue FCSE/1121/UK/V1.0

Tel: +45 63 12 83 00 | Email: ps@hymatik.com | www.hymatik.com | Hvidkaervej 27a, DK-5250 Odense SV, Denmark



3 AND 5 WAY VALVES NAMUR PILOT OPERATED

N03-N04-N05 SERIES - HIGH FLOW ALUMINIUM SPOOL VALVES WITH NAMUR INTERFACE



3/2
5/2
5/3

Way	Actuation	Body	Function	Port Size	Orifice (mm)	Flow Factor Qn(l/min)	MOPD (bar)	Max Fluid Temp. (°C)	Page
3/2	Pilot Operated	Anodized Aluminium/NAMUR	Solenoid operated - spring return	1/2"	12	3000	10	50	192
				1/4"	7	1250	10	50	192
	Externally Operated	Anodized Aluminium/NAMUR	Air operated - spring return	1/2"	12	3000	10	50	196
				1/4"	7	1250	10	50	196
3/2 - 5/2	Pilot Operated	Anodized Aluminium/NAMUR	Solenoid operated - spring return	1/4"	7	1250	10	50	200
5/2	Pilot Operated	Anodized Aluminium/NAMUR	Solenoid operated - spring return	1/2"	12	3000	10	50	202
				1/4"	7	1250	10	50	202
			Dual Solenoids	1/2"	12	3000	10	50	206
				1/4"	7	1250	10	50	204
	Externally Operated	Anodized Aluminium/NAMUR	Air operated - spring return	1/2"	12	3000	10	50	208
				1/4"	7	1250	10	50	208
			Air operated and return	1/4"	7	1250	10	50	208
5/3	Pilot Operated	Anodized Aluminium/NAMUR	W1 closed center position	1/4"	7	1250	10	50	210
			W3 exhausted in center position	1/4"	7	1250	10	50	212

Tel: +45 63 12 83 00 | Email: ps@hymatik.com | www.hymatik.com | Hvidkaervej 27a, DK-5250 Odense SV, Denmark

3/2 3 AND 5 WAY VALVES NAMUR PILOT OPERATED

N03-N04-N05 SERIES - HIGH FLOW ALUMINIUM SPOOL VALVES WITH NAMUR INTERFACE

ANODIZED ALUMINIUM NAMUR

SOLENOID OPERATED - SPRING RETURN

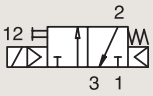

Port size	Orifice Ø	Flow factor	Operating Pressure Differential Min	Operating Pressure Differential Max(MOPD)		Fluid Temp. Min	Fluid Temp. Max	Seat Seal	Valve Ref.	Housing Ref.	Coil Ref.	ATEX Zone	Protection Mode	Power		Coil Group	Dwg. No.
BSP	mm	Qn l/min	bar	AC bar	DC bar	°C	°C							AC W	DC W		
1/4"	7	1250	2.5	10	10	-20	50	NBR	331N03 [1]	-	496131	-	-	3	3	1.2	8056
	7	1250	2.5	10	10	-20	50	NBR	331N03 [1]	-	496482	-	-	3	3	1.2	8056
	7	1250	2.5	10	10	-20	50	NBR	331N03 [1]	-	496637	22	Ex tD A22 IP65 - T95°C	3	3	1.2	8056
1/2"	12	3000	2	10	10	-20	50	NBR	331N04 [1]	-	496131	-	-	3	3	1.2	8060
	12	3000	2	10	10	-20	50	NBR	331N04 [1]	-	496482	-	-	3	3	1.2	8060
	12	3000	2	10	10	-20	50	NBR	331N04 [1]	-	496637	22	Ex tD A22 IP65 - T95°C	3	3	1.2	8060
	12	3000	2	10	10	-20	50	NBR	331N0402	-	496131	-	-	3	3	1.2	8251
	12	3000	2	10	10	-20	50	NBR	331N0402	-	496482	-	-	3	3	1.2	8251
	12	3000	2	10	10	-20	50	NBR	331N0402	-	496637	22	Ex tD A22 IP65 - T95°C	3	3	1.2	8251

Notes:
1. With manual override

Tel: +45 63 12 83 00 | Email: ps@hymatik.com | www.hymatik.com | Hvidkaervej 27a, DK-5250 Odense SV, Denmark

IECEx certified

For this page	Port size	Orifice (mm)	Qn (l/min)	MOPD (bar)	Fluid Temp (°C)	Amb Temp (°C)
From	1/4"	7	1250	10	-20	-20
To	1/2"	12	3000	10	50	50

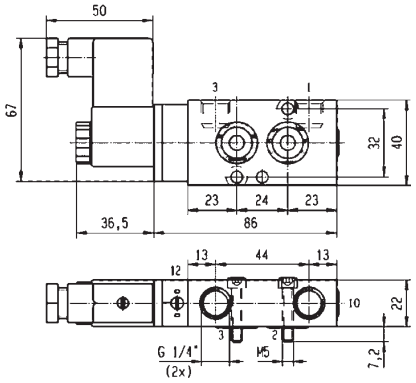



Drawing 8056

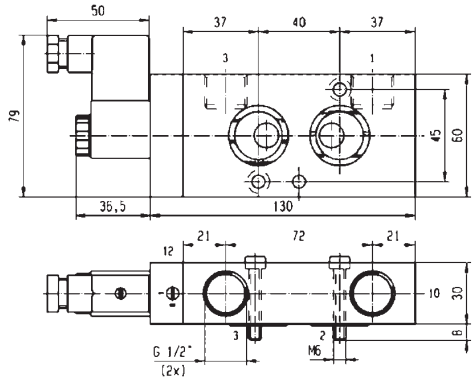



Drawing 8060

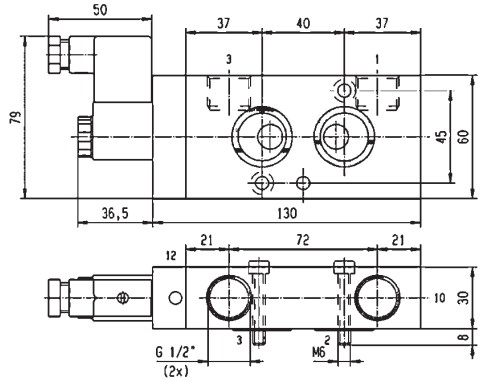



Drawing 8251

Parker Hannifin Corporation
Fluid Control Solutions Europe
Process Catalogue FCSE/1121/UK/V1.0

3/2

3 AND 5 WAY VALVES NAMUR PILOT OPERATED

N03-N04-N05 SERIES - HIGH FLOW ALUMINIUM SPOOL VALVES WITH NAMUR INTERFACE

ANODIZED ALUMINIUM NAMUR

SOLENOID OPERATED - SPRING RETURN

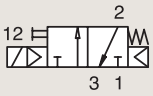

Port size	Orifice Ø	Flow factor	Operating Pressure Differential Min	Operating Pressure Differential Max(MOPD) AC	Operating Pressure Differential Max(MOPD) DC	Fluid Temp. Min	Fluid Temp. Max	Seat Seal	Valve Ref.	Housing Ref.	Coil Ref.	ATEX Zone	Protection Mode	Power AC	Power DC	Coil Group	Dwg. No.
BSP	mm	Qn l/min	bar	bar	bar	°C	°C							W	W		
1/2"	12	3000	2.5	10	10	-20	50	NBR	331N34 $_{12}$	-	495905	1-21	Ex db mb IIC T4	8	8	2.1	8210
	12	3000	2.5	10	10	-20	50	NBR	331N34 $_{12}$	2995	495870	2-22	Ex nc AC IIC T3/T4	8	9	2.1	8210
	12	3000	2.5	10	10	-20	50	NBR	331N34 $_{12}$	2995	481865	-	-	8	9	2.1	8210
	12	3000	2.5	10	10	-20	50	NBR	331N3402	-	495905	1-21	Ex db mb IIC T4	8	8	2.1	8252
	12	3000	2.5	10	10	-20	50	NBR	331N3402	2995	495870	2-22	Ex nc AC IIC T3/T4	8	9	2.1	8252
	12	3000	2.5	10	10	-20	50	NBR	331N3402	2995	481865	-	-	8	9	2.1	8252

Notes:
1. With manual override
2. Pilot seat in FKM

Tel: +45 63 12 83 00 | Email: ps@hymatik.com | www.hymatik.com | Hvidkaervej 27a, DK-5250 Odense SV, Denmark

For this page	Port size	Orifice (mm)	Qn (l/min)	MOPD (bar)	Fluid Temp (°C)	Amb Temp (°C)
From	1/2"	12	3000	10	-20	-20
To	1/2"	12	3000	10	65	50

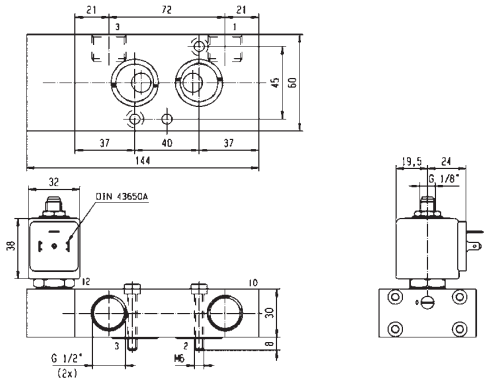



Drawing 8210

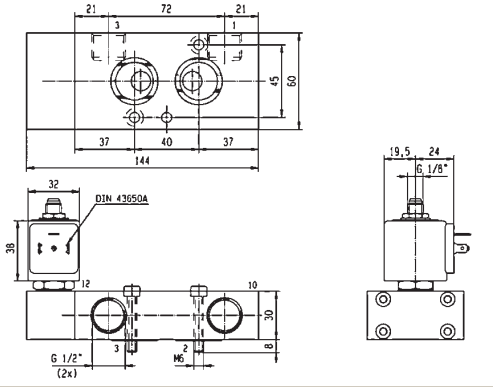



Drawing 8252

Parker Hannifin Corporation
Fluid Control Solutions Europe
Process Catalogue FCSE/1121/UK/V1.0

3/2 3 AND 5 WAY VALVES NAMUR PILOT OPERATED

N03-N04-N05 SERIES - HIGH FLOW ALUMINIUM SPOOL VALVES WITH NAMUR INTERFACE

ANODIZED ALUMINIUM NAMUR

AIR OPERATED - SPRING RETURN

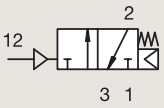

Port size	Orifice Ø	Flow factor	Operating Pressure Differential Min	Operating Pressure Differential Max(MOPD)		Fluid Temp. Min	Fluid Temp. Max	Seat Seal	Valve Ref.	Housing Ref.	Coil Ref.	ATEX Zone	Protection Mode	Power		Coil Group	Dwg. No.
BSP	mm	Qn l/min	bar	AC bar	DC bar	°C	°C							AC W	DC W		
1/4"	7	1250	2.5	10	10	-20	50	NBR	**531N03**	**-**	**-**	-	-	-	-	-	8058
1/2"	12	3000	2.5	10	10	-20	50	NBR	**531N04**	**-**	**-**	-	-	-	-	-	8061

Tel: +45 63 12 83 00 | Email: ps@hymatik.com | www.hymatik.com | Hvidkaervej 27a, DK-5250 Odense SV, Denmark

For this page	Port size	Orifice (mm)	Qn (l/min)	MOPD (bar)	Fluid Temp (°C)	Amb Temp (°C)
From	1/4"	7	1250	10	-20	-20
To	1/2"	12	3000	10	50	50

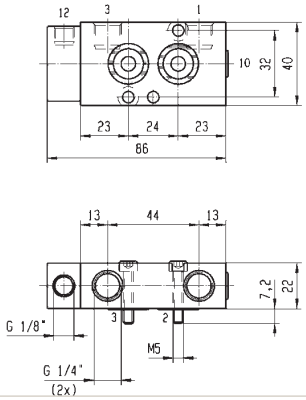



Drawing 8058

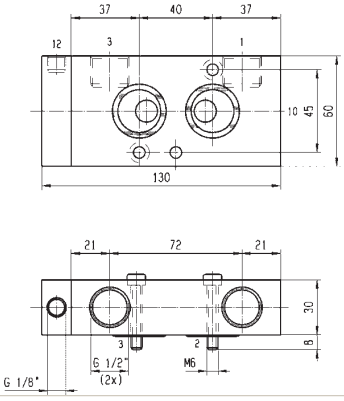



Drawing 8061

Parker Hannifin Corporation
Fluid Control Solutions Europe
Process Catalogue FCSE/1121/UK/V1.0

3/2 5/2

3 AND 5 WAY VALVES NAMUR PILOT OPERATED

N03-N04-N05 SERIES - HIGH FLOW ALUMINIUM SPOOL VALVES WITH NAMUR INTERFACE

ANODIZED ALUMINIUM NAMUR

SOLENOID OPERATED - SPRING RETURN

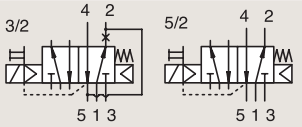

Port size	Orifice Ø	Flow factor	Operating Pressure Differential Min	Operating Pressure Differential Max(MOPD) AC	Operating Pressure Differential Max(MOPD) DC	Fluid Temp. Min	Fluid Temp. Max	Seat Seal	Valve Ref.	Housing Ref.	Coil Ref.	ATEX Zone	Protection Mode	Power AC	Power DC	Coil Group	Dwg. No.
BSP	mm	Qn l/min	bar	AC bar	DC bar	°C	°C							W	W		
1/4"	7	1250	2.5	10	10	-20	50	NBR	341N05 $_{12}$	-	496131	-	-	3	3	1.2	8162
	7	1250	2.5	10	10	-20	50	NBR	341N05 $_{12}$	-	496482	-	-	3	3	1.2	8162
	7	1250	2.5	10	10	-20	50	NBR	341N05 $_{12}$	-	496637	22	Ex tD A22 IP65 - T95°C	3	3	1.2	8162
	7	1200	2.5	10	10	-20	50	NBR	341N0502 $_{2}$	-	496131	-	-	3	3	1.2	8253
	7	1200	2.5	10	10	-20	50	NBR	341N0502 $_{2}$	-	496482	-	-	3	3	1.2	8253
	7	1200	2.5	10	10	-20	50	NBR	341N0502 $_{2}$	-	496637	22	Ex tD A22 IP65 - T95°C	3	3	1.2	8253

Notes:
1. With manual override
2. Valve delivered with the 3/2 - 5/2 convertion plate

Tel: +45 63 12 83 00 | Email: ps@hymatik.com | www.hymatik.com | Hvidkaervej 27a, DK-5250 Odense SV, Denmark

For this page	Port size	Orifice (mm)	Qn (l/min)	MOPD (bar)	Fluid Temp (°C)	Amb Temp (°C)
From	1/4"	7	1200	10	-20	-20
To	1/4"	7	1250	10	50	50

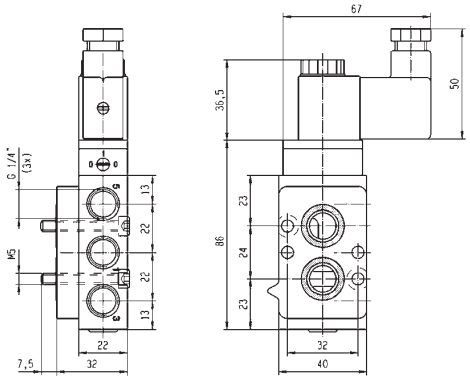

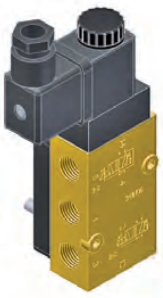

Drawing 8162

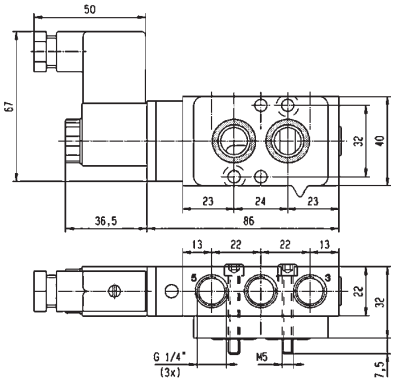



Drawing 8253

Parker Hannifin Corporation
Fluid Control Solutions Europe
Process Catalogue FCSE/1121/UK/V1.0

3/2 5/2

3 AND 5 WAY VALVES NAMUR PILOT OPERATED

N03-N04-N05 SERIES - HIGH FLOW ALUMINIUM SPOOL VALVES WITH NAMUR INTERFACE

ANODIZED ALUMINIUM NAMUR

SOLENOID OPERATED - SPRING RETURN

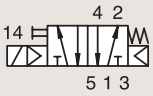

Port size	Orifice Ø	Flow factor	Operating Pressure Differential			Fluid Temp.		Seat Seal	Valve Ref.	Housing Ref.	Coil Ref.	ATEX Zone	Protection Mode	Power		Coil Group	Dwg. No.
			Min	Max(MOPD)		Min	Max										
BSP	mm	Qn l/min	bar	AC bar	DC bar	°C	°C							AC W	DC W		
	7	1200	2.5	10	10	-20	50	NBR	**341N35** [123]	**-**	**495905**	1-21	Ex db mb IIC T4	8	8	2.1	8213
	7	1200	2.5	10	10	-20	50	NBR	**341N35** [123]	**2995**	**495870**	2-22	Ex nc AC IIC T3/T4	8	9	2.1	8213
	7	1200	2.5	10	10	-20	50	NBR	**341N35** [123]	**2995**	**481865**	-	-	8	9	2.1	8213
	7	1200	2.5	10	10	-20	50	NBR	**341N3502** [23]	**-**	**495905**	1-21	Ex db mb IIC T4	8	8	2.1	8254
1/4"	7	1200	2.5	10	10	-20	50	NBR	**341N3502** [23]	**2995**	**495870**	2-22	Ex nc AC IIC T3/T4	8	9	2.1	8254
	7	1200	2.5	10	10	-20	50	NBR	**341N3502** [23]	**2995**	**481865**	-	-	8	9	2.1	8254
	7	1200	2	-	10	-20	50	NBR	**341N3590** [3]	**2995**	**483580.01**	0-20	Ex ia IIC T6	-	0.5 to 3	8.0	8254
	7	1200	2	-	10	-20	50	NBR	**341N3590** [3]	**-**	**495910**	0-20	Ex ia IIC T4 to T6	-	0.3 to 3	8.0	8254
	7	1200	2	10	10	-20	50	NBR	**341N3590** [3]	**-**	**495900**	1-21	Ex db mb IIC T4 to T6	2.5	2	8.0	8254

Notes:
1. With manual override
2. Pilot seat in FKM
3. Valve delivered with the 3/2 - 5/2 convertion plate

Tel: +45 63 12 83 00 | Email: ps@hymatik.com | www.hymatik.com | Hvidkaervej 27a, DK-5250 Odense SV, Denmark

IECEx certified

For this page	Port size	Orifice (mm)	Qn (l/min)	MOPD (bar)	Fluid Temp (°C)	Amb Temp (°C)
From	1/4"	7	1200	10	-20	-20
To	1/4"	7	1200	10	50	50

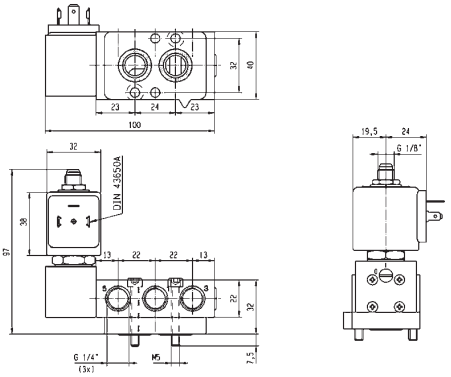



Drawing 8213

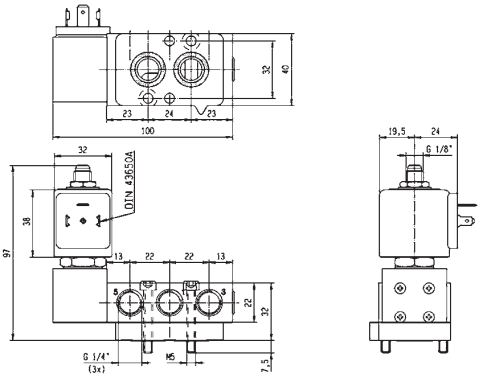



Drawing 8254

Parker Hannifin Corporation
Fluid Control Solutions Europe
Process Catalogue FCSE/1121/UK/V1.0

5/2 3 AND 5 WAY VALVES NAMUR PILOT OPERATED

N03-N04-N05 SERIES - HIGH FLOW ALUMINIUM SPOOL VALVES WITH NAMUR INTERFACE

ANODIZED ALUMINIUM NAMUR

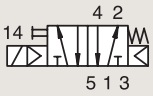

SOLENOID OPERATED - SPRING RETURN

Port size	Orifice Ø	Flow factor	Operating Pressure Differential Min	Max(MOPD)		Fluid Temp. Min	Max	Seat Seal	Valve Ref.	Housing Ref.	Coil Ref.	ATEX Zone	Protection Mode	Power		Coil Group	Dwg. No.
BSP	mm	Qn l/min	bar	AC bar	DC bar	°C	°C							AC W	DC W		
1/4"	7	1250	2.5	10	10	-20	50	NBR	341N03 [1]	-	496131	-	-	3	3	1.2	8063
	7	1250	2.5	10	10	-20	50	NBR	341N03 [1]	-	496482	-	-	3	3	1.2	8063
	7	1250	2.5	10	10	-20	50	NBR	341N03 [1]	-	496637	22	Ex tD A22 IP65 - T95°C	3	3	1.2	8063
1/2"	12	3000	2	10	10	-20	50	NBR	341N04 [1]	-	496131	-	-	3	3	1.2	8065
	12	3000	2	10	10	-20	50	NBR	341N04 [1]	-	496482	-	-	3	3	1.2	8065
	12	3000	2	10	10	-20	50	NBR	341N04	-	496637	22	Ex tD A22 IP65 - T95°C	3	3	1.2	8065
	12	3000	2.5	10	10	-20	50	NBR	341N34 [12]	-	495905	1-21	Ex db mb IIC T4	8	8	2.1	8211
	12	3000	2.5	10	10	-20	50	NBR	341N34 [12]	2995	495870	2-22	Ex nc AC IIC T3/T4	8	9	2.1	8211
	12	3000	2.5	10	10	-20	50	NBR	341N34 [12]	2995	481865	-	-	8	9	2.1	8211

Notes:
1. With manual override
2. Pilot with FKM seal

Tel: +45 63 12 83 00 | Email: ps@hymatik.com | www.hymatik.com | Hvidkaervej 27a, DK-5250 Odense SV, Denmark

For this page	Port size	Orifice (mm)	Qn (l/min)	MOPD (bar)	Fluid Temp (°C)	Amb Temp (°C)
From	1/4"	7	1250	10	-20	-20
To	1/2"	12	3000	10	50	50

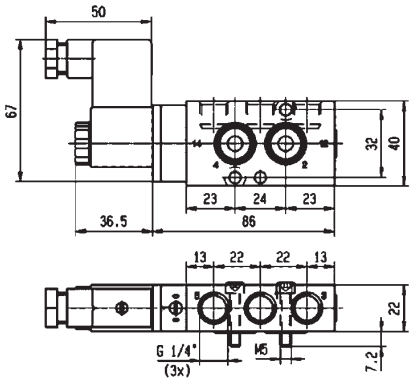



Drawing 8063

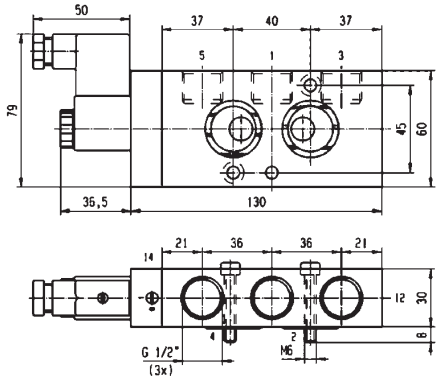



Drawing 8065

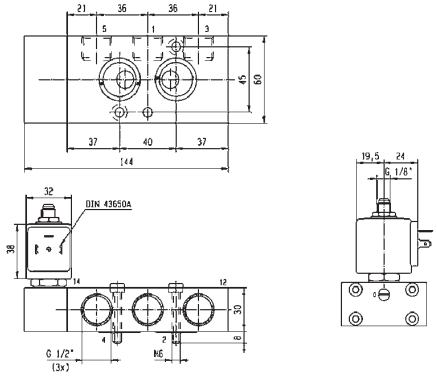

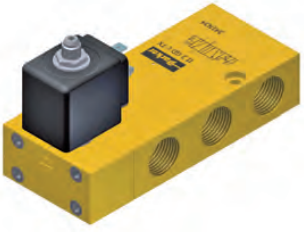

Drawing 8211

Parker Hannifin Corporation
Fluid Control Solutions Europe
Process Catalogue FCSE/1121/UK/V1.0

5/2 3 AND 5 WAY VALVES NAMUR PILOT OPERATED

N03-N04-N05 SERIES - HIGH FLOW ALUMINIUM SPOOL VALVES WITH NAMUR INTERFACE

ANODIZED ALUMINIUM NAMUR

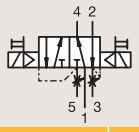

DUAL SOLENOIDS

Port size	Orifice Ø	Flow factor	Operating Pressure Differential Min	Max(MOPD)		Fluid Temp. Min	Max	Seat Seal	Valve Ref.	Housing Ref.	Coil Ref.	ATEX Zone	Protection Mode	Power		Coil Group	Dwg. No.
BSP	mm	Qn l/min	bar	AC bar	DC bar	°C	°C							AC W	DC W		
1/4"	7	1250	1.5	10	10	-20	50	NBR	**347N03** [1]	**-**	**496131**	-	-	3	3	1.2	8057
	7	1250	1.5	10	10	-20	50	NBR	**347N03** [1]	**-**	**496482**	-	-	3	3	1.2	8057
	7	1250	1.5	10	10	-20	50	NBR	**347N03** [1]	**-**	**496637**	22	Ex tD A22 IP65 - T95°C	3	3	1.2	8057
	7	1250	2.5	10	10	-20	50	NBR	**347N33** [12]	**-**	**495905**	1-21	Ex db mb IIC T4	8	8	2.1	8209
	7	1250	2.5	10	10	-20	50	NBR	**347N33** [12]	**2995**	**495870**	2-22	Ex nc AC IIC T3/T4	8	9	2.1	8209
	7	1250	2.5	10	10	-20	50	NBR	**347N33** [12]	**2995**	**481865**	-	-	8	9	2.1	8209

Notes:
1. With manual override
2. Pilot seat in FKM

Tel: +45 63 12 83 00 | Email: ps@hymatik.com | www.hymatik.com | Hvidkaervej 27a, DK-5250 Odense SV, Denmark

For this page	Port size	Orifice (mm)	Qn (l/min)	MOPD (bar)	Fluid Temp (°C)	Amb Temp (°C)
From	1/4"	7	1250	10	-20	-20
To	1/4"	7	1250	10	50	50

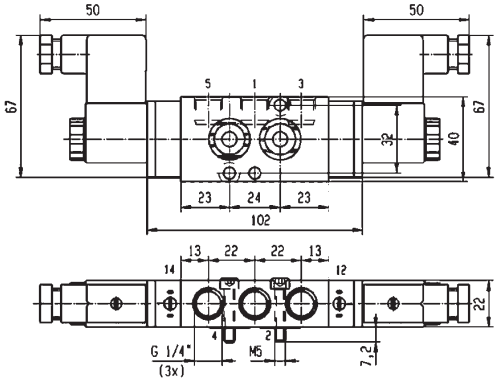

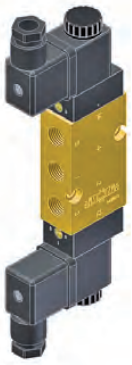

Drawing 8057

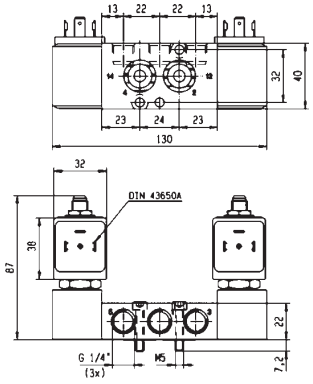

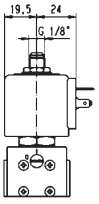



Drawing 8209

Parker Hannifin Corporation
Fluid Control Solutions Europe
Process Catalogue FCSE/1121/UK/V1.0

5/2

3 AND 5 WAY VALVES NAMUR PILOT OPERATED

N03-N04-N05 SERIES - HIGH FLOW ALUMINIUM SPOOL VALVES WITH NAMUR INTERFACE

ANODIZED ALUMINIUM

NAMUR

DUAL SOLENOIDS

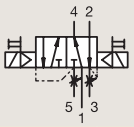

Port size	Orifice Ø	Flow factor	Operating Pressure Differential			Fluid Temp.		Seat Seal	Valve Ref.	Housing Ref.	Coil Ref.	ATEX Zone	Protection Mode	Power		Coil Group	Dwg. No.
			Min	Max(MOPD)		Min	Max										
BSP	mm	Qn l/min	bar	AC bar	DC bar	°C	°C							AC W	DC W		
1/2"	12	3000	2	10	10	-20	50	NBR	**347N04** [1]	**-**	**496131**	-	-	3	3	1.2	8154
	12	3000	2	10	10	-20	50	NBR	**347N04** [1]	**-**	**496482**	-	-	3	3	1.2	8154
	12	3000	2	10	10	-20	50	NBR	**347N04** [1]	**-**	**496637**	22	Ex tD A22 IP65 - T95°C	3	3	1.2	8154
	12	3000	2.5	10	10	-20	50	NBR	**347N34** [12]	**-**	**495905**	1-21	Ex db mb IIC T4	8	8	2.1	8212
	12	3000	2.5	10	10	-20	50	NBR	**347N34** [12]	**2995**	**495870**	2-22	Ex nc AC IIC T3/T4	8	9	2.1	8212
	12	3000	2.5	10	10	-20	50	NBR	**347N34** [12]	**2995**	**481865**	-	-	8	9	2.1	8212

Notes:
1. With manual override
2. Pilot seat in FKM

Tel: +45 63 12 83 00 | Email: ps@hymatik.com | www.hymatik.com | Hvidkaervej 27a, DK-5250 Odense SV, Denmark

IECEx certified

For this page	Port size	Orifice (mm)	Qn (l/min)	MOPD (bar)	Fluid Temp (°C)	Amb Temp (°C)
From	1/2"	12	3000	10	-20	-20
To	1/2"	12	3000	10	50	50

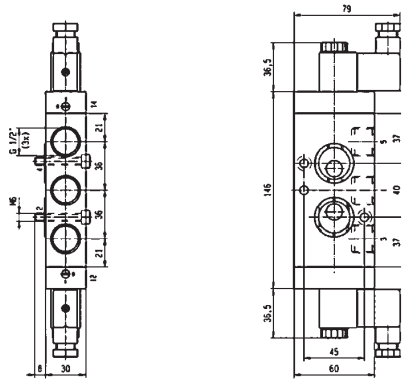



Drawing 8154

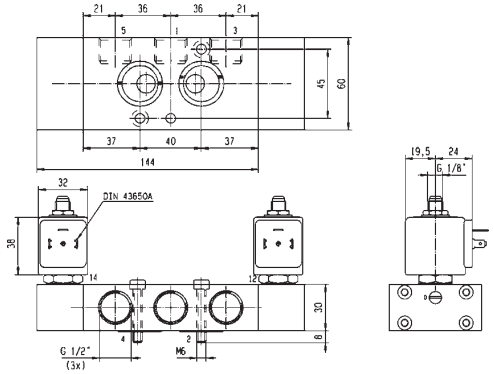

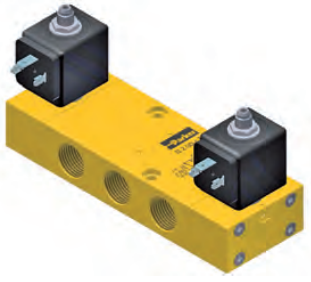

Drawing 8212

Parker Hannifin Corporation
Fluid Control Solutions Europe
Process Catalogue FCSE/1121/UK/V1.0

5/2 3 AND 5 WAY VALVES NAMUR PILOT OPERATED

N03-N04-N05 SERIES - HIGH FLOW ALUMINIUM SPOOL VALVES WITH NAMUR INTERFACE

ANODIZED ALUMINIUM NAMUR

AIR OPERATED - SPRING RETURN

5/2 FUNCTION

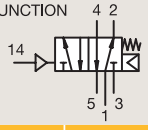

Port size	Orifice Ø	Flow factor	Operating Pressure Differential			Fluid Temp.		Seat Seal	Valve Ref.	Housing Ref.	Coil Ref.	ATEX Zone	Protection Mode	Power		Coil Group	Dwg. No.
			Min	Max(MOPD)		Min	Max										
BSP	mm	Qn l/min	bar	AC bar	DC bar	°C	°C							AC W	DC W		
1/4"	7	1250	2.5	10	10	-20	50	NBR	541N03	-	-	-	-	-	-	-	8064
1/2"	12	3000	2.5	10	10	-20	50	NBR	541N04	-	-	-	-	-	-	-	8066

ANODIZED ALUMINIUM NAMUR

AIR OPERATED AND RETURN

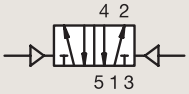

Port size	Orifice Ø	Flow factor	Operating Pressure Differential			Fluid Temp.		Seat Seal	Valve Ref.	Housing Ref.	Coil Ref.	ATEX Zone	Protection Mode	Power		Coil Group	Dwg. No.
			Min	Max(MOPD)		Min	Max										
BSP	mm	Qn l/min	bar	AC bar	DC bar	°C	°C							AC W	DC W		
1/4"	7	1250	1.5	10	10	-20	50	NBR	547N03	-	-	-	-	-	-	-	8059

Parker Hannifin Corporation
Fluid Control Solutions Europe
Process Catalogue FCSE/1121/UK/V1.0

For this page	Port size	Orifice (mm)	Qn (l/min)	MOPD (bar)	Fluid Temp (°C)	Amb Temp (°C)
From	1/4"	7	1250	10	-20	-20
To	1/2"	12	3000	10	50	50

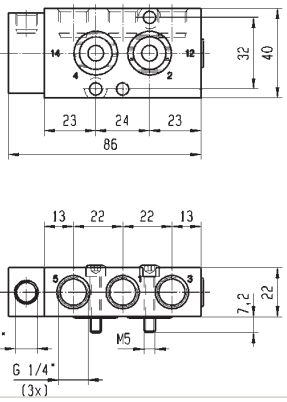



Drawing 8064

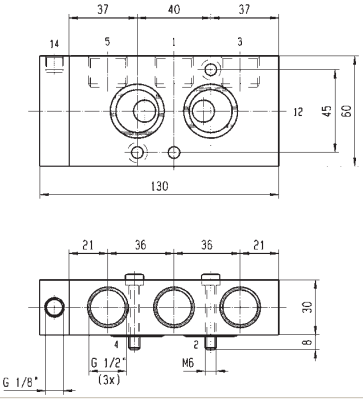



Drawing 8066

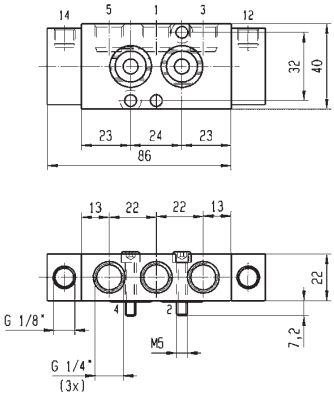



Drawing 8059

Parker Hannifin Corporation
Fluid Control Solutions Europe
Process Catalogue FCSE/1121/UK/V1.0

5/3 3 AND 5 WAY VALVES NAMUR PILOT OPERATED

N03-N04-N05 SERIES - HIGH FLOW ALUMINIUM SPOOL VALVES WITH NAMUR INTERFACE

ANODIZED ALUMINIUM NAMUR

W1 CLOSED CENTER POSITION

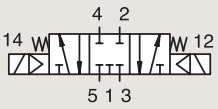

Port size	Orifice Ø	Flow factor	Operating Pressure Differential			Fluid Temp.		Seat Seal	Valve Ref.	Housing Ref.	Coil Ref.	ATEX Zone	Protection Mode	Power		Coil Group	Dwg. No.
			Min	Max(MOPD)		Min	Max										
BSP	mm	Qn l/min	bar	AC bar	DC bar	°C	°C							AC W	DC W		
1/4"	7	1250	3	10	10	-20	50	NBR	342N03 [1]	-	496131	-	-	3	3	1.2	8057
	7	1250	3	10	10	-20	50	NBR	342N03 [1]	-	496482	-	-	3	3	1.2	8057
	7	1250	3	10	10	-20	50	NBR	342N03 [1]	-	496637	22	Ex tD A22 IP65 - T95°C	3	3	1.2	8057
	7	1250	2.5	10	10	-20	50	NBR	342N33 [12]	-	495905	1-21	Ex db mb IIC T4	8	8	2.1	8209
	7	1250	2.5	10	10	-20	50	NBR	342N33 [12]	2995	495870	2-22	Ex nc AC IIC T3/T4	8	9	2.1	8209
	7	1250	2.5	10	10	-20	50	NBR	342N33 [12]	2995	481865	-	-	8	9	2.1	8209

Notes:
1. With manual override
2. Pilot seat in FKM

ANODIZED ALUMINIUM NAMUR

AIR OPERATED W1 CLOSED CENTER

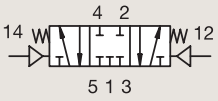

Port size	Orifice Ø	Flow factor	Operating Pressure Differential			Fluid Temp.		Seat Seal	Valve Ref.	Housing Ref.	Coil Ref.	ATEX Zone	Protection Mode	Power		Coil Group	Dwg. No.
			Min	Max(MOPD)		Min	Max										
BSP	mm	Qn l/min	bar	AC bar	DC bar	°C	°C							AC W	DC W		
1/4"	7	1250	2.5	10	10	-20	50	NBR	542N03	-	-	-	-	-	-	-	8059

Tel: +45 63 12 83 00 | Email: ps@hymatik.com | www.hymatik.com | Hvidkaervej 27a, DK-5250 Odense SV, Denmark

For this page	Port size	Orifice (mm)	Qn (l/min)	MOPD (bar)	Fluid Temp (°C)	Amb Temp (°C)
From	1/4"	7	1250	10	-20	-20
To	1/4"	7	1250	10	50	50

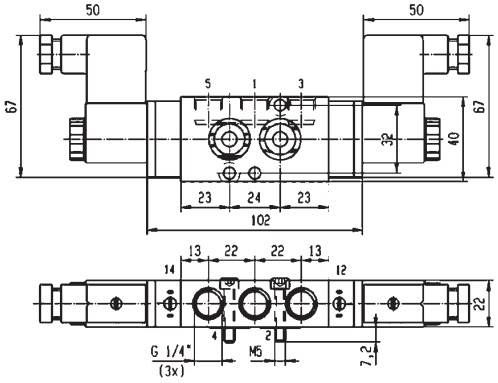



Drawing 8057

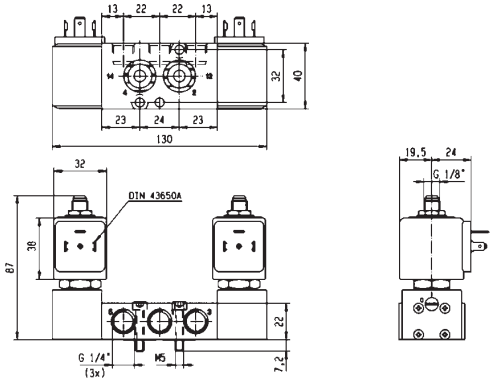



Drawing 8209

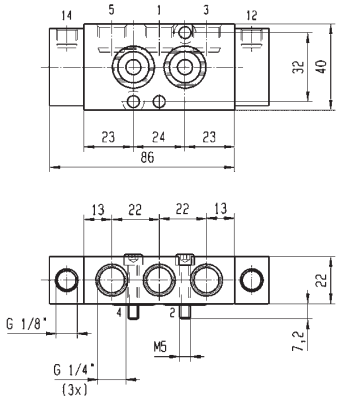



Drawing 8059

Parker Hannifin Corporation
Fluid Control Solutions Europe
Process Catalogue FCSE/1121/UK/V1.0

5/3

3 AND 5 WAY VALVES NAMUR PILOT OPERATED

N03-N04-N05 SERIES - HIGH FLOW ALUMINIUM SPOOL VALVES WITH NAMUR INTERFACE

ANODIZED ALUMINIUM NAMUR

W3 EXHAUSTED IN CENTER POSITION

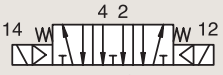

Sur valve

Port size	Orifice Ø	Flow factor	Operating Pressure Differential Min	Operating Pressure Differential Max(MOPD)		Fluid Temp. Min	Fluid Temp. Max	Seat Seal	Valve Ref.	Housing Ref.	Coil Ref.	ATEX Zone	Protection Mode	Power		Coil Group	Dwg. No.
BSP	mm	Qn l/min	bar	AC bar	DC bar	°C	°C							AC W	DC W		
1/4"	7	1250	3	10	10	-20	50	NBR	**343N03** [1]	-	**496131**	-	-	3	3	1.2	8057
	7	1250	3	10	10	-20	50	NBR	**343N03** [1]	-	**496482**	-	-	3	3	1.2	8057
	7	1250	3	10	10	-20	50	NBR	**343N03** [1]	-	**496637**	22	Ex tD A22 IP65 - T95°C	3	3	1.2	8057

Notes:
1. With manual override

For this page	Port size	Orifice (mm)	Qn (l/min)	MOPD (bar)	Fluid Temp (°C)	Amb Temp (°C)
From	1/8"-1/4"	4	355	10	-20	-20
To	1/4"	7	1250	10	50	50

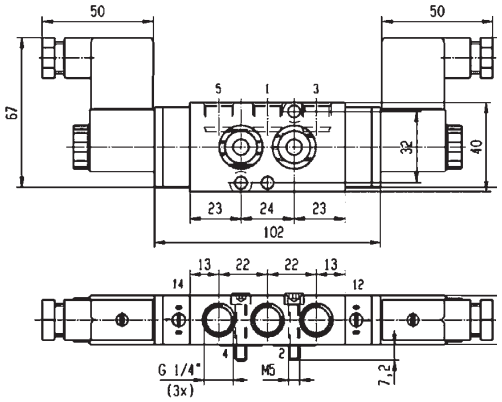

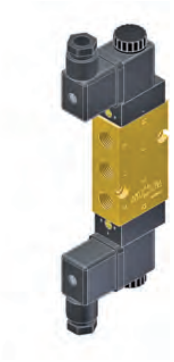

Drawing 8057

Tel: +45 63 12 83 00 | Email: ps@hymatik.com | www.hymatik.com | Hvidkaervej 27a, DK-5250 Odense SV, Denmark

Tel: +45 63 12 83 00 | Email: ps@hymatik.com | www.hymatik.com | Hvidkaervej 27a, DK-5250 Odense SV, Denmark



3 AND 5 WAY VALVES NAMUR PILOT OPERATED

L95 SERIES - ALUMINIUM POPPET VALVES WITH NAMUR INTERFACE



3/2
5/2

Actuation	Body	Function	Port Size	Orifice (mm)	Flow Factor Qn(l/min)	MOPD (bar)	Max Fluid Temp. (°C)	Page
Pilot Operated	**Anodized Aluminium/NAMUR**	**Solenoid operated - spring return**	1/8"-1/4"	4	355	10	75	**216**

Parker Hannifin Corporation
Fluid Control Solutions Europe
Process Catalogue FCSE/1121/UK/V1.0

3/2 5/2

3 AND 5 WAY VALVES NAMUR PILOT OPERATED

L95 SERIES - ALUMINIUM POPPET VALVES WITH NAMUR INTERFACE

ANODIZED ALUMINIUM NAMUR

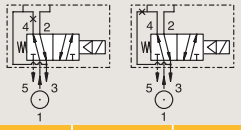

SOLENOID OPERATED - SPRING RETURN

Port size	Orifice Ø	Flow factor	Operating Pressure Differential Min	Max (MOPD)		Fluid Temp. Min	Max	Seat Seal	Valve Ref.	Housing Ref.	Coil Ref.	ATEX Zone	Protection Mode	Power		Coil Group	Dwg. No.
BSP	mm	Qn l'min	bar	AC bar	DC bar	°C	°C							AC W	DC W		
1/8"-1/4"	4	355	1	10	10	-10	50	NBR	341L9504 123	-	482606	1-21	Ex mb IIC T4/T5	2	2.5	1.1	7009
	4	355	1	10	10	-10	75	NBR	341L9504 123	8993	488980	-	-	2	2.5	1.1	7009
	4	355	1	10	10	-10	65	NBR	341L9534 123	-	495905	1-21	Ex db mb IIC T4	8	8	2.1	3990
	4	355	1	10	10	-10	60	NBR	341L9534 123	2995	495870	2-22	Ex nc AC IIC T3/T4	8	9	2.1	3990
	4	355	1	10	10	-10	75	NBR	341L9534 123	2995	481865	-	-	8	9	2.1	3990
	4	355	2	-	10	-10	55	NBR	341L9594 23	2995	483580.01	0-20	Ex ia IIC T6	-	0.5 to 3	6.0/7.0/8.0	3992
	4	355	1	-	10	-10	65	NBR	341L9594 23	-	495910	0-20	Ex ia IIC T4 to T6	-	0.3 to 3	6.0/7.0/8.0	8354
	4	355	1	10	10	-10	65	NBR	341L9594 23	-	495900	1-21	Ex db mb IIC T4 to T6	2.5	2	6.0/7.0/8.0	8354

Notes:
1. With manual override
2. Pilot seat in FKM
3. Valve delivered with the 3/2 - 5/2 convertion plate

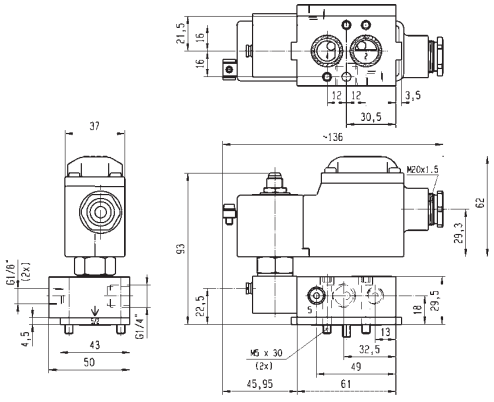



Drawing 8354

Tel: +45 63 12 83 00 | Email: ps@hymatik.com | www.hymatik.com | Hvidkaervej 27a, DK-5250 Odense SV, Denmark

IECEx certified

For this page	Port size	Orifice (mm)	Qn (l/min)	MOPD (bar)	Fluid Temp (°C)	Amb Temp (°C)
From	1/8"-1/4"	4	355	10	-10	-10
To	1/8"-1/4"	4	355	10	75	50

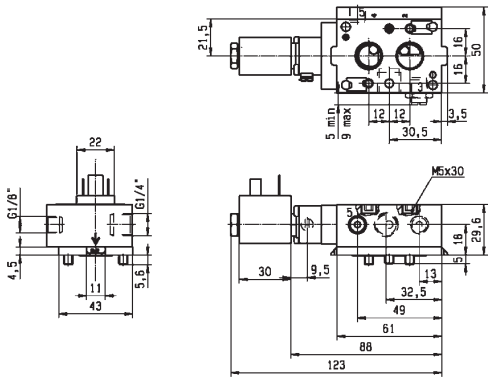



Drawing 7009

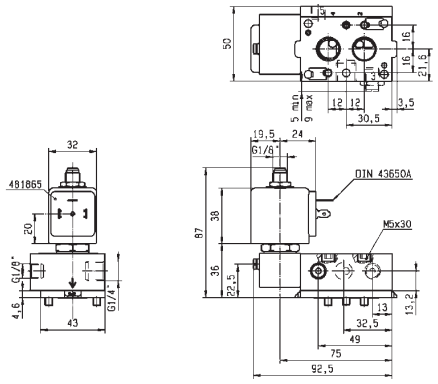



Drawing 3990

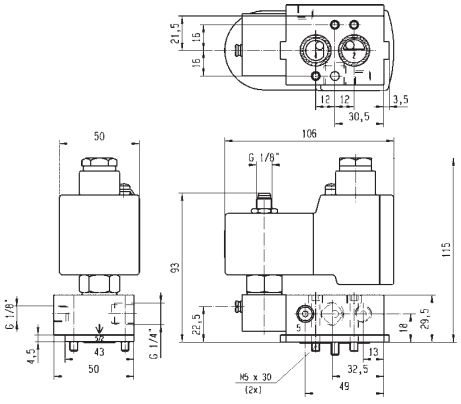



Drawing 3992

Parker Hannifin Corporation
Fluid Control Solutions Europe
Process Catalogue FCSE/1121/UK/V1.0

Tel: +45 63 12 83 00 | Email: ps@hymatik.com | www.hymatik.com | Hvidkaervej 27a, DK-5250 Odense SV, Denmark

3/2 5/2

3 AND 5 WAY VALVES NAMUR PILOT OPERATED

L95 SERIES - ALUMINIUM POPPET VALVES WITH NAMUR INTERFACE

ANODIZED ALUMINIUM NAMUR

SOLENOID OPERATED - SPRING RETURN

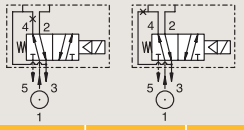

Port size	Orifice Ø	Flow factor	Operating Pressure Differential Min	Max (MOPD)		Fluid Temp. Min	Max	Seat Seal	Valve Ref.	Housing Ref.	Coil Ref.	ATEX Zone	Protection Mode	Power		Coil Group	Dwg. No.
BSP	mm	Qn l'min	bar	AC bar	DC bar	°C	°C							AC W	DC W		
1/8"-1/4"	4	355	2	-	10	-10	65	NBR	**341L9597** [123]	-	**495910**	0-20	Ex ia IIC T4 to T6	-	0.3 to 3	6.0/8.0	8025
	4	355	2	10	10	-10	65	NBR	**341L9597** [123]	-	**495900**	1-21	Ex db mb IIC T4 to T6	2.5	2	6.0/8.0	8025
	4	355	2	-	10	-10	65	NBR	**341L9597** [123]	**2995**	**496125**	2-22	Ex nAC IIC T5/T6	-	1.6	6.0/8.0	8025
	4	355	2	-	10	-10	75	NBR	**341L9597** [123]	**2995**	**482740**	-	-	-	1.6	6.0/8.0	8025
	4	355	2	-	10	-25	55	NBR	**341L9598** [23]	**2995**	**483580.01**	0-20	Ex ia IIC T6	-	0.5 to 3	6.0/7.0/8.0	3992
	4	355	2	-	10	-25	65	NBR	**341L9598** [23]	-	**495910**	0-20	Ex ia IIC T4 to T6	-	0.3 to 3	6.0/7.0/8.0	8354
	4	355	2	10	10	-25	65	NBR	**341L9598** [23]	-	**495900**	1-21	Ex db mb IIC T4 to T6	2.5	2	6.0/7.0/8.0	8354

Notes:
1. With manual override
2. Valve delivered with the 3/2 - 5/2 convertion plate
3. Pilot seat in PUR

Tel: +45 63 12 83 00 | Email: ps@hymatik.com | www.hymatik.com | Hvidkaervej 27a, DK-5250 Odense SV, Denmark

IECEx certified

For this page	Port size	Orifice (mm)	Qn (l/min)	MOPD (bar)	Fluid Temp (°C)	Amb Temp (°C)
From	1/8"-1/4"	4	355	10	-10	-10
To	1/8"-1/4"	4	355	10	75	50

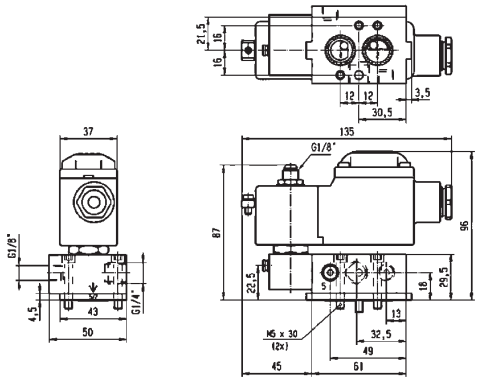



Drawing 8025

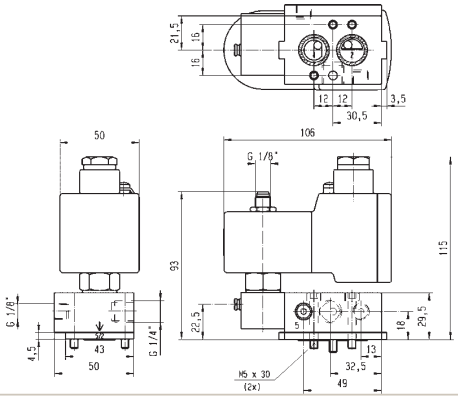



Drawing 3992

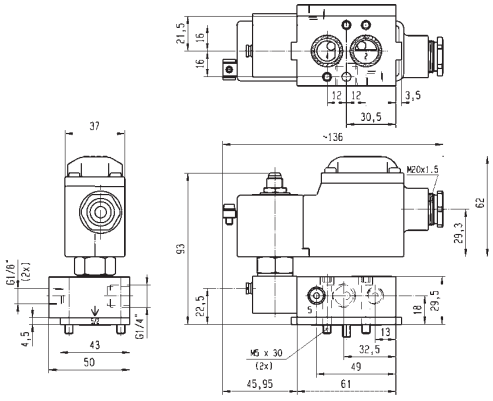



Drawing 8354

Parker Hannifin Corporation
Fluid Control Solutions Europe
Process Catalogue FCSE/1121/UK/V1.0

Tel: +45 63 12 83 00 | Email: ps@hymatik.com | www.hymatik.com | Hvidkaervej 27a, DK-5250 Odense SV, Denmark



3 AND 5 WAY VALVES NAMUR PILOT OPERATED

N01 N02 SERIES - SPOOL VALVES WITH NAMUR INTERFACE



3/2
5/2
5/3

Way	Actuation	Body	Function	Port Size	Orifice (mm)	Flow Factor Qn(l/min)	MOPD (bar)	Max Fluid Temp. (°C)	Page
3/2 - 5/2	Pilot Operated	316L Stainless St./NAMUR	Normally Closed	3/8"-1/4"	8	1400	10	80	222
			Solenoid operated - spring return	3/8"-1/4"	8	1400	10	80	224
	Pilot Operated	Anodized Aluminium/NAMUR	Solenoid operated - spring return	1/4"	8	1400	10	80	226
				1/8"-1/4"	4 to 8	1400	10	80	228
	External Operated	Anodized Aluminium/NAMUR	Air operated - spring return	1/8"-1/4"	4	1400	10	80	236
	Pilot Operated	Anodized Aluminium/NAMUR	Control by Electric Impulse	1/8"-1/4"	4	1400	10	80	236
5/2	Pilot Operated	316L Stainless St./NAMUR	Dual Solenoids	3/8"-1/4"	8	1400	10	80	238
		Anodized Aluminium/NAMUR	Dual Solenoids	1/4"	8	1400	10	80	240
				1/8"-1/4"	4	1400	10	80	242
5/3	Pilot Operated	Anodized Aluminium/NAMUR	W1 closed center position	1/4"	4	1400	10	65	244
				1/8"-1/4"	4	1400	10	80	244

Tel: +45 63 12 83 00 | Email: ps@hymatik.com | www.hymatik.com | Hvidkaervej 27a, DK-5250 Odense SV, Denmark

3/2-5/2

3 AND 5 WAY VALVES NAMUR PILOT OPERATED

N01 N02 SERIES - SPOOL VALVES WITH NAMUR INTERFACE

316L STAINLESS ST.

NAMUR

NORMALLY CLOSED

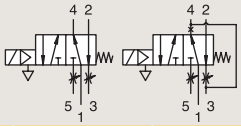

Port size	Orifice Ø	Flow factor	Operating Pressure Differential Min	Operating Pressure Differential Max(MOPD) AC	Operating Pressure Differential Max(MOPD) DC	Fluid Temp. Min	Fluid Temp. Max	Seat Seal	Valve Ref.	Housing Ref.	Coil Ref.	ATEX Zone	Protection Mode	Power AC	Power DC	Coil Group	Dwg. No.
NPT	mm	Qn l/min	bar	AC bar	DC bar	°C	°C							W	W		
	8	1400	2	10	10	-25	65	NBR	U341N3250 [1]	-	495905	1-21	Ex db mb IIC T4	8	8	2.1	7554
	8	1400	2	10	10	-25	60	NBR	U341N3250 [1]	2995	495870	2-22	Ex nc AC IIC T3/T4	8	9	2.1	7554
	8	1400	2	10	10	-25	80	NBR	U341N3250 [1]	2995	481865	-	-	8	9	2.1	7554
	8	1400	2	-	10	-25	55	NBR	U341N3292 [1]	2995	483580.01	0-20	Ex ia IIC T6	-	0.5 to 3	6.0/7.0	7556
	8	1400	2	10	10	-25	65	NBR	U341N3292 [1]	-	495900	1-21	Ex db mb IIC T4 to T6	2.5	2	6.0/7.0	7556
3/8"-1/4"	8	1400	2	10	10	-25	65	NBR	U341N3292 [1]	-	495910	1-21	Ex db mb IIC T4 to T6	2.5	2	6.0/7.0	7556
	8	1400	2	-	10	-25	80	NBR	U341N3295 [1]	-	496565	0-20	Ex ia IIB/IIC T4 to T6	-	0.3	9.0/10.1	7554
	8	1400	2	10	10	-25	75	NBR	U341N3295 [1]	-	492310	1-21	Ex mb II T4 to T5	6	6	9.0/10.1	7696
	8	1400	2	10	10	-25	65	NBR	U341N3295 [1]	-	496800	1-21	Ex db mb IIC T4	8	8	9.0/10.1	7554
	8	1400	2	-	10	-25	75	NBR	U341N3295 [1]	-	492210	1-21	Ex eb mb IIC T5 to T6	-	1 to 1.8	9.0/10.1	7696
	8	1400	2	10	10	-25	80	NBR	U341N3295 [1]	-	496555	1-21	Ex db mb IIC T4 to T6	6	6	9.0/10.1	7554
	8	1400	2	10	10	-25	75	NBR	U341N3295 [1]	-	496895	-	-	8	8	9.0/10.1	7554

Notes:
1. Pilot seal in FKM

Tel: +45 63 12 83 00 | Email: ps@hymatik.com | www.hymatik.com | Hvidkaervej 27a, DK-5250 Odense SV, Denmark

IECEx certified

For this page	Port size	Orifice (mm)	Qn (l/min)	MOPD (bar)	Fluid Temp (°C)	Amb Temp (°C)
From	3/8"-1/4"	8	0	10	-25	-25
To	3/8"-1/4"	8	1400	10	80	0

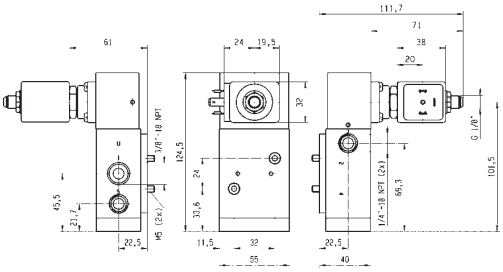



Drawing 7554

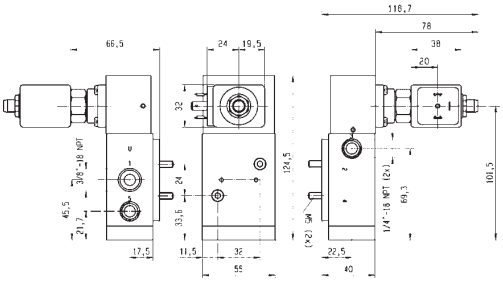



Drawing 7556

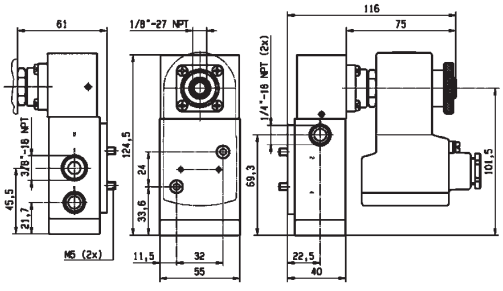

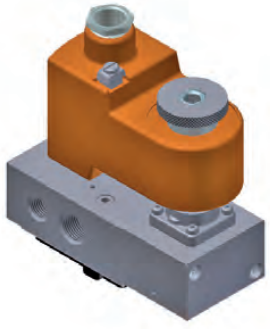

Drawing 7696

Parker Hannifin Corporation
Fluid Control Solutions Europe
Process Catalogue FCSE/1121/UK/V1.0

3/2-5/2 3 AND 5 WAY VALVES NAMUR PILOT OPERATED

N01 N02 SERIES - SPOOL VALVES WITH NAMUR INTERFACE

316L STAINLESS ST.

NAMUR

SOLENOID OPERATED - SPRING RETURN

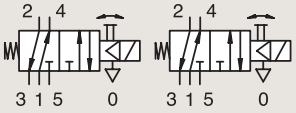

Port size	Orifice Ø	Flow factor	Operating Pressure Differential Min	Operating Pressure Differential Max(MOPD) AC	Operating Pressure Differential Max(MOPD) DC	Fluid Temp. Min	Fluid Temp. Max	Seat Seal	Valve Ref.	Housing Ref.	Coil Ref.	ATEX Zone	Protection Mode	Power AC	Power DC	Coil Group	Dwg. No.
NPT	mm	Qn l/min	bar	bar	bar	°C	°C							W	W		
3/8"-1/4"	8	1400	2	10	10	-25	50	NBR	U341N0250 123	-	482606	1-21	Ex mb IIC T4/T5	2	2.5	1.1	7577
	8	1400	2	10	10	-25	80	NBR	U341N0250 123	8993	488980	-	-	2	2.5	1.1	7577

Notes:
1. With manual override
2. With captured exhaust
3. Pilot seal in FKM

Tel: +45 63 12 83 00 | Email: ps@hymatik.com | www.hymatik.com | Hvidkaervej 27a, DK-5250 Odense SV, Denmark

IECEx certified

For this page	Port size	Orifice (mm)	Qn (l/min)	MOPD (bar)	Fluid Temp (°C)	Amb Temp (°C)
From	3/8"-1/4"	8	1400	10	-25	-25
To	3/8"-1/4"	8	1400	10	80	50

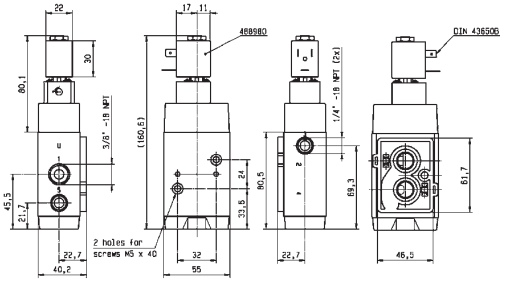



Drawing 7577

Parker Hannifin Corporation
Fluid Control Solutions Europe
Process Catalogue FCSE/1121/UK/V1.0

3/2-5/2 3 AND 5 WAY VALVES NAMUR PILOT OPERATED

N01 N02 SERIES - SPOOL VALVES WITH NAMUR INTERFACE

ANODIZED ALUMINIUM NAMUR

SOLENOID OPERATED - SPRING RETURN

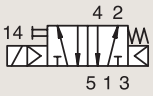

Port size	Orifice Ø	Flow factor	Operating Pressure Differential Min	Max(MOPD)		Fluid Temp. Min	Max	Seat Seal	Valve Ref.	Housing Ref.	Coil Ref.	ATEX Zone	Protection Mode	Power		Coil Group	Dwg. No.
BSP	mm	Qn l/min	bar	AC bar	DC bar	°C	°C							AC W	DC W		
	8	1400	2	10	10	-25	50	NBR	**341N02** $_{123}$	-	**482606**	1-21	Ex mb IIC T4/T5	2	2.5	1.1	7313
	8	1400	2	10	10	-25	80	NBR	**341N02** $_{123}$	**8993**	**488980**	-	-	2	2.5	1.1	7313
	8	1400	2	10	10	-25	50	NBR	**341N12** $_{123}$	-	**482606**	1-21	Ex mb IIC T4/T5	2	2.5	1.1	7312
	8	1400	2	10	10	-25	80	NBR	**341N12** $_{123}$	**8993**	**488980**	-	-	2	2.5	1.1	7312
	8	1400	2	10	10	-25	65	NBR	**341N22** $_{123}$	-	**495905**	1-21	Ex db mb IIC T4	8	8	2.1	7318
	8	1400	2	10	10	-25	60	NBR	**341N22** $_{123}$	**2995**	**495870**	2-22	Ex nc AC IIC T3/T4	8	9	2.1	7318
1/4"	8	1400	2	10	10	-25	80	NBR	**341N22** $_{123}$	**2995**	**481865**	-	-	8	9	2.1	7318
	8	1400	2	10	10	-25	65	NBR	**341N32** $_{13}$	-	**495905**	1-21	Ex db mb IIC T4	8	8	2.1	7317
	8	1400	2	10	10	-25	60	NBR	**341N32** $_{13}$	**2995**	**495870**	2-22	Ex nc AC IIC T3/T4	8	9	2.1	7317
	8	1400	2	10	10	-25	80	NBR	**341N32** $_{13}$	**2995**	**481865**	-	-	8	9	2.1	7317
	8	1400	2	10	10	-25	65	NBR	**341N3202** $_{3}$	-	**495905**	1-21	Ex db mb IIC T4	8	8	2.1	7317
	8	1400	2	10	10	-25	60	NBR	**341N3202** $_{3}$	**2995**	**495870**	2-22	Ex nc AC IIC T3/T4	8	9	2.1	7317
	8	1400	2	10	10	-25	80	NBR	**341N3202** $_{3}$	**2995**	**481865**	-	-	8	9	2.1	7317

Notes:
1. With manual override
2. With captured exhaust
3. Pilot seal in FKM

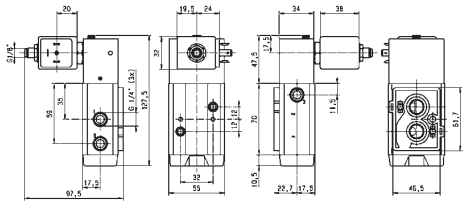



Drawing 7317

Parker Hannifin Corporation
Fluid Control Solutions Europe
Process Catalogue FCSE/1121/UK/V1.0

For this page	Port size	Orifice (mm)	Qn (l/min)	MOPD (bar)	Fluid Temp (°C)	Amb Temp (°C)
From	1/4"	8	1400	10	-25	-25
To	1/4"	8	1400	10	80	50

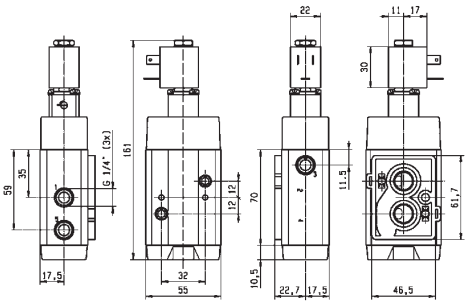



Drawing 7313

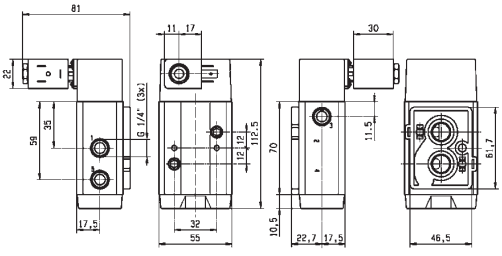

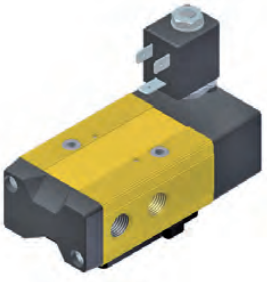

Drawing 7312

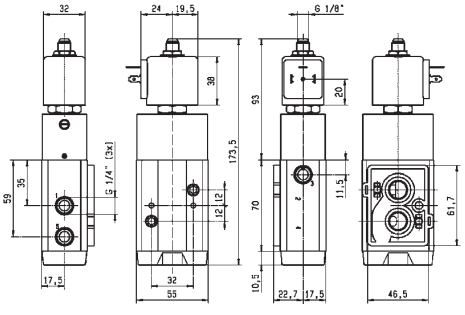



Drawing 7318

Parker Hannifin Corporation
Fluid Control Solutions Europe
Process Catalogue FCSE/1121/UK/V1.0

3/2-5/2

3 AND 5 WAY VALVES NAMUR PILOT OPERATED

N01 N02 SERIES - SPOOL VALVES WITH NAMUR INTERFACE

ANODIZED ALUMINIUM NAMUR

SOLENOID OPERATED - SPRING RETURN

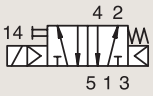

Port size	Orifice Ø	Flow factor	Operating Pressure Differential			Fluid Temp.		Seat Seal	Valve Ref.	Housing Ref.	Coil Ref.	ATEX Zone	Protection Mode	Power		Coil Group	Dwg. No.
			Min	Max(MOPD)		Min	Max										
BSP	mm	Qn l/min	bar	AC bar	DC bar	°C	°C							AC W	DC W		
1/8"-1/4"	4	600	2	10	10	-25	50	NBR	**341N01** 123	-	**482606**	1-21	Ex mb IIC T4/T5	2	2.5	1.1	7301
	4	600	2	10	10	-25	80	NBR	**341N01** 123	**8993**	**488980**	-	-	2	2.5	1.1	7301
	4	600	2	10	10	-25	50	NBR	**341N11** 123	-	**482606**	1-21	Ex mb IIC T4/T5	2	2.5	1.1	7300
	4	600	2	10	10	-25	80	NBR	**341N11** 123	**8993**	**488980**	-	-	2	2.5	1.1	7300
	4	600	2	10	10	-25	65	NBR	**341N21** 13	-	**495905**	1-21	Ex db mb IIC T4	8	8	2.1	7311
	4	600	2	10	10	-25	60	NBR	**341N21** 13	**2995**	**495870**	2-22	Ex nc AC IIC T3/T4	8	9	2.1	7311
	4	600	2	10	10	-25	80	NBR	**341N21** 13	**2995**	**481865**	-	-	8	9	2.1	7311

Notes:
1. With manual override
2. With captured exhaust
3. Pilot with FKM seal

Tel: +45 63 12 83 00 | Email: ps@hymatik.com | www.hymatik.com | Hvidkaervej 27a, DK-5250 Odense SV, Denmark

IECEx certified

For this page	Port size	Orifice (mm)	Qn (l/min)	MOPD (bar)	Fluid Temp (°C)	Amb Temp (°C)
From	1/8"-1/4"	4	600	10	-25	-25
To	1/8"-1/4"	4	600	10	80	50

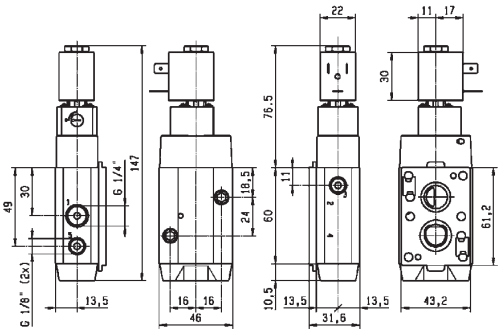



Drawing 7301

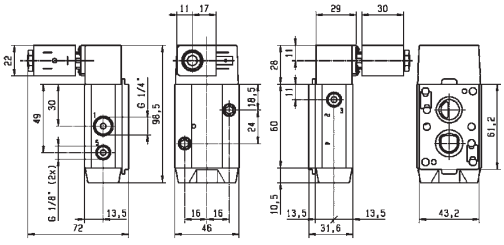



Drawing 7300

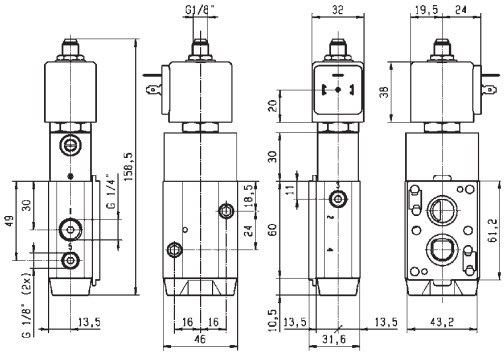



Drawing 7311

Parker Hannifin Corporation
Fluid Control Solutions Europe
Process Catalogue FCSE/1121/UK/V1.0

3/2-5/2

3 AND 5 WAY VALVES NAMUR PILOT OPERATED

N01 N02 SERIES - SPOOL VALVES WITH NAMUR INTERFACE

ANODIZED ALUMINIUM NAMUR

SOLENOID OPERATED - SPRING RETURN

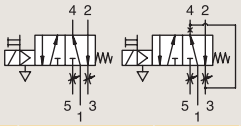

Port size	Orifice Ø	Flow factor	Operating Pressure Differential Min	Max(MOPD) AC	Max(MOPD) DC	Fluid Temp. Min	Fluid Temp. Max	Seat Seal	Valve Ref.	Housing Ref.	Coil Ref.	ATEX Zone	Protection Mode	Power AC	Power DC	Coil Group	Dwg. No.
BSP	mm	Qn l/min	bar	AC bar	DC bar	°C	°C							W	W		
1/8"-1/4"	4	600	2	-	10	-25	55	NBR	341N2190 [2]	2995	483580.01	0-20	Ex ia IIC T6	-	0.5 to 3	6.0/7.0/8.0	7874
	4	600	2	-	10	-25	55	NBR	341N2190 [2]	-	495910	0-20	Ex ia IIC T4 to T6	-	0.3 to 3	6.0/7.0/8.0	7874
	4	600	2	10	10	-25	55	NBR	341N2190 [2]	-	495900	1-21	Ex db mb IIC T4 to T6	2.5	2	6.0/7.0/8.0	7874
	4	600	2	10	10	-25	65	NBR	341N31 [12]	-	495905	1-21	Ex db mb IIC T4	8	8	2.1	7295
	4	600	2	10	10	-25	60	NBR	341N31 [12]	2995	495870	2-22	Ex nc AC IIC T3/T4	8	9	2.1	7295
	4	600	2	10	10	-25	80	NBR	341N31 [12]	2995	481865	-	-	8	9	2.1	7295
	4	600	2	10	10	-25	65	NBR	341N3102 [2]	-	495905	1-21	Ex db mb IIC T4	8	8	2.1	7295
	4	600	2	10	10	-25	60	NBR	341N3102 [2]	2995	495870	2-22	Ex nc AC IIC T3/T4	8	9	2.1	7295
	4	600	2	10	10	-25	80	NBR	341N3102 [2]	2995	481865	-	-	8	9	2.1	7295
	4	600	2	10	10	-40	65	NBR	341N3108 [13]	-	495905	1-21	Ex db mb IIC T4	8	8	2.1	7295
	4	600	2	10	10	-40	60	NBR	341N3108 [13]	2995	495870	2-22	Ex nc AC IIC T3/T4	8	9	2.1	7295
	4	600	2	10	10	-40	65	NBR	341N3108 [3]	2995	481865	-	-	8	9	2.1	7295
	4	600	2	10	10	-40	65	NBR	341N3128 [3]	-	495905	1-21	Ex db mb IIC T4	8	8	2.1	7295
	4	600	2	10	10	-40	60	NBR	341N3128 [3]	2995	495870	2-22	Ex nc AC IIC T3/T4	8	9	2.1	7295
	4	600	2	10	10	-40	65	NBR	341N3128 [3]	2995	481865	-	-	8	9	2.1	7295
	4	600	2	-	10	-25	65	NBR	341N3130 [12]	-	495905	1-21	Ex db mb IIC T4	-	8	2.1	7295
	4	600	2	-	10	-25	60	NBR	341N3130 [12]	2995	495870	2-22	Ex nc AC IIC T3/T4	-	9	2.1	7295
	4	600	2	-	10	-25	80	NBR	341N3130 [12]	2995	481865	-	-	-	9	2.1	7295

Notes:
1. With manual override
2. Pilot with FKM seal
3. Pilot with PUR seal

Tel: +45 63 12 83 00 | Email: ps@hymatik.com | www.hymatik.com | Hvidkaervej 27a, DK-5250 Odense SV, Denmark

For this page	Port size	Orifice (mm)	Qn (l/min)	MOPD (bar)	Fluid Temp (°C)	Amb Temp (°C)
From	1/8"-1/4"	4	600	10	-40	-25
To	1/8"-1/4"	4	600	10	80	50

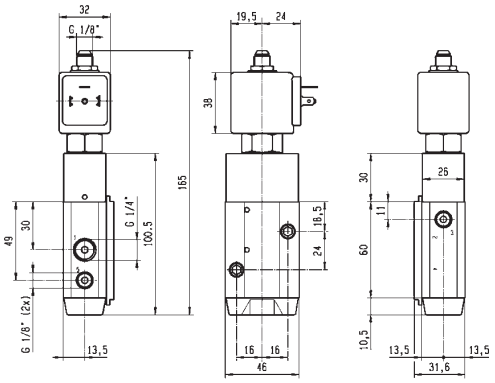



Drawing 7874

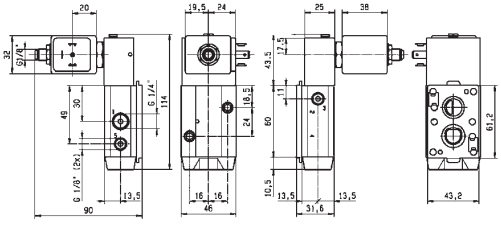



Drawing 7295

Parker Hannifin Corporation
Fluid Control Solutions Europe
Process Catalogue FCSE/1121/UK/V1.0

3/2-5/2 3 AND 5 WAY VALVES NAMUR PILOT OPERATED

N01 N02 SERIES - SPOOL VALVES WITH NAMUR INTERFACE

ANODIZED ALUMINIUM NAMUR

SOLENOID OPERATED - SPRING RETURN

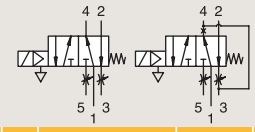

Port size	Orifice Ø	Flow factor	Operating Pressure Differential Min	Operating Pressure Differential Max(MOPD) AC	Operating Pressure Differential Max(MOPD) DC	Fluid Temp. Min	Fluid Temp. Max	Seat Seal	Valve Ref.	Housing Ref.	Coil Ref.	ATEX Zone	Protection Mode	Power AC	Power DC	Coil Group	Dwg. No.
BSP	mm	Qn l/min	bar	AC bar	DC bar	°C	°C							W	W		
1/8"-1/4"	4	600	2	-	10	-10	55	NBR	341N3190 [3]	2995	483580.01	0-20	Ex ia IIC T6	-	0.5 to 3	6.0/7.0/8.0	7349
	4	600	2	-	10	-10	65	NBR	341N3190 [3]	-	495910	0-20	Ex ia IIC T4 to T6	-	0.3 to 3	6.0/7.0/8.0	7349
	4	600	2	10	10	-10	65	NBR	341N3190 [3]	-	495900	1-21	Ex db mb IIC T4 to T6	2.5	2	6.0/7.0/8.0	7349
	4	600	2	-	10	-25	65	NBR	341N3196 [2]	-	495910	0-20	Ex ia IIC T4 to T6	-	0.3 to 3	6.0/7.0/8.0	8017
	4	600	2	-	10	-25	55	NBR	341N3196 [2]	2995	483580.01	0-20	Ex ia IIC T6	-	0.5 to 3	6.0/7.0/8.0	8017
	4	600	2	10	10	-25	65	NBR	341N3196 [2]	-	495900	1-21	Ex db mb IIC T4 to T6	2.5	2	6.0/7.0/8.0	8017
	4	600	2	-	10	-25	65	NBR	341N3197 [12]	-	495910	0-20	Ex ia IIC T4 to T6	-	0.3 to 3	6.0/7.0/8.0	8017
	4	600	2	10	10	-25	65	NBR	341N3197 [12]	-	495900	1-21	Ex db mb IIC T4 to T6	2.5	2	6.0/7.0/8.0	8017
	4	600	2	-	10	-25	65	NBR	341N3197 [12]	2995	496125	2-22	Ex nAC IIC T5/T6	-	1.6	6.0/7.0/8.0	8017
	4	600	2	-	10	-25	65	NBR	341N3197 [12]	2995	482740	-	-	-	1.6	6.0/7.0/8.0	8017

Notes:
1. With manual override
2. Pilot seal in FKM
3. Pilot seal in PUR

IECEx certified

For this page	Port size	Orifice (mm)	Qn (l/min)	MOPD (bar)	Fluid Temp (°C)	Amb Temp (°C)
From	1/8"-1/4"	4	600	10	-25	-25
To	1/8"-1/4"	4	600	10	65	50

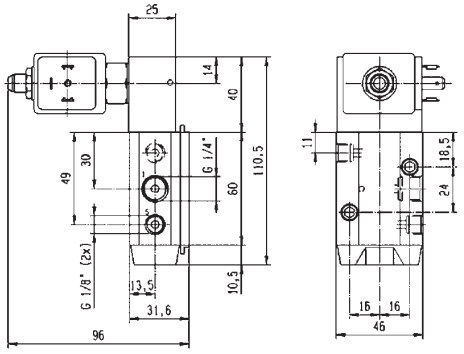



Drawing 7349

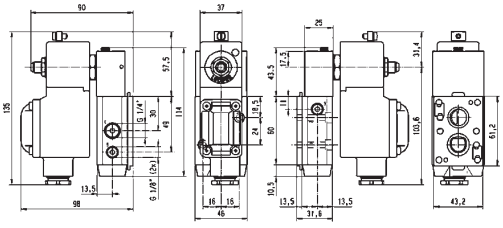



Drawing 8017

Parker Hannifin Corporation
Fluid Control Solutions Europe
Process Catalogue FCSE/1121/UK/V1.0

3/2-5/2 3 AND 5 WAY VALVES NAMUR PILOT OPERATED

N01 N02 SERIES - SPOOL VALVES WITH NAMUR INTERFACE

ANODIZED ALUMINIUM NAMUR

SOLENOID OPERATED - SPRING RETURN

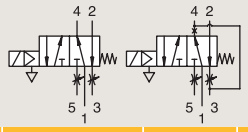

Port size	Orifice Ø	Flow factor	Operating Pressure Differential Min	Max(MOPD) AC	Max(MOPD) DC	Fluid Temp. Min	Fluid Temp. Max	Seat Seal	Valve Ref.	Housing Ref.	Coil Ref.	ATEX Zone	Protection Mode	Power AC	Power DC	Coil Group	Dwg. No.
BSP	mm	Qn l/min	bar	bar	bar	°C	°C							W	W		
1/8"-1/4"	8	1400	2	-	10	-25	55	NBR	**341N3290** [3]	**2995**	**483580.01**	0-20	Ex ia IIC T6	-	0.5 to 3	6.0/7.0/8.0	7350
	8	1400	2	-	10	-25	65	NBR	**341N3290** [3]	**-**	**495910**	0-20	Ex ia IIC T4 to T6	-	0.3 to 3	6.0/7.0/8.0	7350
	8	1400	2	10	10	-25	65	NBR	**341N3290** [3]	**-**	**495900**	1-21	Ex db mb IIC T4 to T6	2.5	2	6.0/7.0/8.0	7350
	8	1400	2	-	10	-25	65	NBR	**341N3296** [2]	**-**	**495910**	0-20	Ex ia IIC T4 to T6	-	0.3 to 3	6.0/7.0/8.0	8029
	8	1400	2	-	10	-25	55	NBR	**341N3296** [2]	**2995**	**483580.01**	0-20	Ex ia IIC T6	-	0.5 to 3	6.0/7.0/8.0	8029
	8	1400	2	10	10	-25	65	NBR	**341N3296** [2]	**-**	**495900**	1-21	Ex db mb IIC T4 to T6	2.5	2	6.0/7.0/8.0	8029
	8	1400	2	-	10	-25	65	NBR	**341N3297** [12]	**-**	**495910**	0-20	Ex ia IIC T4 to T6	-	0.3 to 3	6.0/7.0/8.0	8029
	8	1400	2	10	10	-25	65	NBR	**341N3297** [12]	**-**	**495900**	1-21	Ex db mb IIC T4 to T6	2.5	2	6.0/7.0/8.0	8029
	8	1400	2	-	10	-25	65	NBR	**341N3297** [12]	**2995**	**496125**	2-22	Ex nAC IIC T5/T6	-	1.6	6.0/7.0/8.0	8029
	8	1400	2	-	10	-25	65	NBR	**341N3297** [12]	**2995**	**482740**	-	-	-	1.6	6.0/7.0/8.0	8029

Notes:
1. With manual override
2. Pilot with PUR seal
3. Pilot with FKM seal

Tel: +45 63 12 83 00 | Email: ps@hymatik.com | www.hymatik.com | Hvidkaervej 27a, DK-5250 Odense SV, Denmark

IECEx certified

For this page	Port size	Orifice (mm)	Qn (l/min)	MOPD (bar)	Fluid Temp (°C)	Amb Temp (°C)
From	1/8"-1/4"	8	1400	10	-25	-25
To	1/8"-1/4"	8	1400	10	65	50

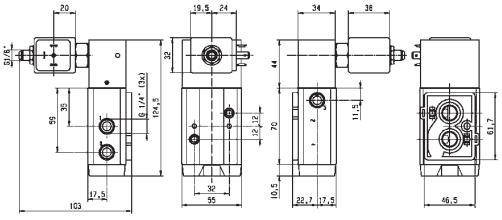



Drawing 7350

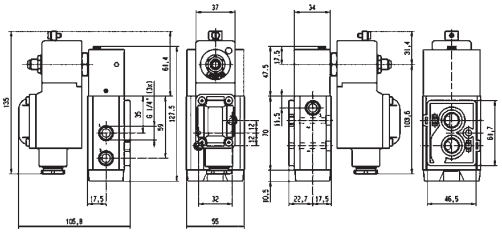



Drawing 8029

Parker Hannifin Corporation
Fluid Control Solutions Europe
Process Catalogue FCSE/1121/UK/V1.0

3/2-5/2 3 AND 5 WAY VALVES NAMUR PILOT OPERATED

N01 N02 SERIES - SPOOL VALVES WITH NAMUR INTERFACE

ANODIZED ALUMINIUM NAMUR

AIR OPERATED - SPRING RETURN

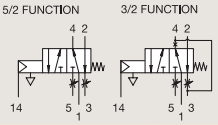

Port size BSP	Orifice Ø mm	Flow factor Qn l/min	Operating Pressure Differential Min bar	Operating Pressure Differential Max(MOPD) AC bar	Operating Pressure Differential Max(MOPD) DC bar	Fluid Temp. Min °C	Fluid Temp. Max °C	Seat Seal	Valve Ref.	Housing Ref.	Coil Ref.	ATEX Zone	Protection Mode	Power AC W	Power DC W	Coil Group	Dwg. No.
1/8"-1/4"	4	600	2	10	10	-25	80	NBR	**541N01**	**-**	**-**	-	-	-	-	-	7309
1/8"-1/4"	4	600	2	10	10	-40	50	NBR	**541N0108**	**-**	**-**	-	-	-	-	-	7309

ANODIZED ALUMINIUM NAMUR

CONTROL BY ELECTRIC IMPULSE

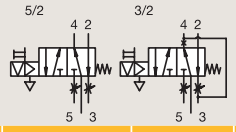

Port size BSP	Orifice Ø mm	Flow factor Qn l/min	Operating Pressure Differential Min bar	Operating Pressure Differential Max(MOPD) AC bar	Operating Pressure Differential Max(MOPD) DC bar	Fluid Temp. Min °C	Fluid Temp. Max °C	Seat Seal	Valve Ref.	Housing Ref.	Coil Ref.	ATEX Zone	Protection Mode	Power AC W	Power DC W	Coil Group	Dwg. No.
1/8"-1/4"	4	600	2	-	10	-25	80	NBR	**345N31** [12]	**4269**	**485400**	-	-	-	13	4.0	7295

Notes:
1. With manual override
2. Pilot seal in FKM

Parker Hannifin Corporation
Fluid Control Solutions Europe
Process Catalogue FCSE/1121/UK/V1.0

Tel: +45 63 12 83 00 | Email: ps@hymatik.com | www.hymatik.com | Hvidkaervej 27a, DK-5250 Odense SV, Denmark

For this page	Port size	Orifice (mm)	Qn (l/min)	MOPD (bar)	Fluid Temp (°C)	Amb Temp (°C)
From	1/8"-1/4"	4	600	10	-25	-25
To	1/8"-1/4"	4	600	10	80	50

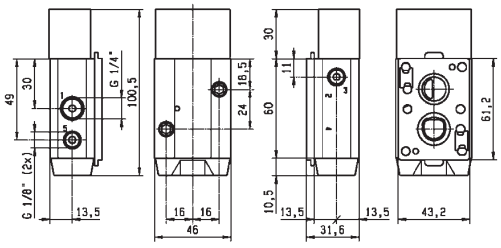



Drawing 7309

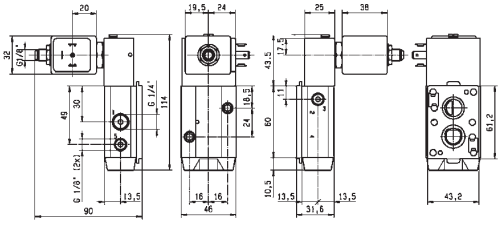



Drawing 7295

Parker Hannifin Corporation
Fluid Control Solutions Europe
Process Catalogue FCSE/1121/UK/V1.0

5/2

3 AND 5 WAY VALVES NAMUR PILOT OPERATED

N01 N02 SERIES - SPOOL VALVES WITH NAMUR INTERFACE

316L STAINLESS ST.

NAMUR

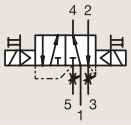

DUAL SOLENOIDS

Port size	Orifice Ø	Flow factor	Operating Pressure Differential Min	Operating Pressure Differential Max(MOPD)		Fluid Temp. Min	Fluid Temp. Max	Seat Seal	Valve Ref.	Housing Ref.	Coil Ref.	ATEX Zone	Protection Mode	Power		Coil Group	Dwg. No.
NPT	mm	Qn l'min	bar	AC bar	DC bar	°C	°C							AC W	DC W		
3/8"-1/4"	8	1400	2	10	10	-25	65	NBR	U347N3250 [1]	-	495905	1-21	Ex db mb IIC T4	8	8	2.1	7557
	8	1400	2	10	10	-25	60	NBR	U347N3250 [1]	2995	495870	2-22	Ex nc AC IIC T3/T4	8	9	2.1	7557
	8	1400	2	10	10	-25	80	NBR	U347N3250 [1]	2995	481865	-	-	8	9	2.1	7557

Notes:
1. Pilot seal in FKM

For this page	Port size	Orifice (mm)	Qn (l/min)	MOPD (bar)	Fluid Temp (°C)	Amb Temp (°C)
From	3/8"-1/4"	8	1400	10	-25	-25
To	3/8"-1/4"	8	1400	10	80	50

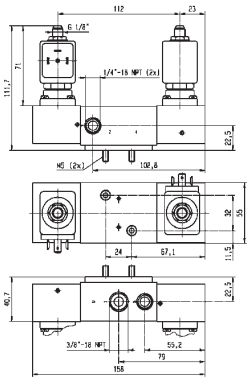



Drawing 7557

5/2

3 AND 5 WAY VALVES NAMUR PILOT OPERATED

N01 N02 SERIES - SPOOL VALVES WITH NAMUR INTERFACE

ANODIZED ALUMINIUM

NAMUR

DUAL SOLENOIDS

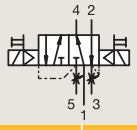

Port size	Orifice Ø	Flow factor	Operating Pressure Differential Min	Operating Pressure Differential Max(MOPD)		Fluid Temp. Min	Fluid Temp. Max	Seat Seal	Valve Ref.	Housing Ref.	Coil Ref.	ATEX Zone	Protection Mode	Power		Coil Group	Dwg. No.
BSP	mm	Qn l/min	bar	AC bar	DC bar	°C	°C							AC W	DC W		
1/4"	8	1400	2	10	10	-25	50	NBR	347N12 $_{123}$	-	482606	1-21	Ex mb IIC T4/T5	2	2.5	1.1	7315
	8	1400	2	10	10	-25	80	NBR	347N12 $_{123}$	8993	488980	-	-	2	2.5	1.1	7315
	8	1400	2	10	10	-25	65	NBR	347N32 $_{13}$	-	495905	1-21	Ex db mb IIC T4	8	8	2.1	7320
	8	1400	2	10	10	-25	60	NBR	347N32 $_{13}$	2995	495870	2-22	Ex nc AC IIC T3/T4	8	9	2.1	7320
	8	1400	2	10	10	-25	80	NBR	347N32 $_{13}$	2995	481865	-	-	8	9	2.1	7320

Notes:
1. With manual override
2. With captured exhaust
3. Pilot with FKM seal

Tel: +45 63 12 83 00 | Email: ps@hymatik.com | www.hymatik.com | Hvidkaervej 27a, DK-5250 Odense SV, Denmark

IECEx certified

For this page	Port size	Orifice (mm)	Qn (l/min)	MOPD (bar)	Fluid Temp (°C)	Amb Temp (°C)
From	1/4"	8	1400	10	-25	-25
To	1/4"	8	1400	10	80	50

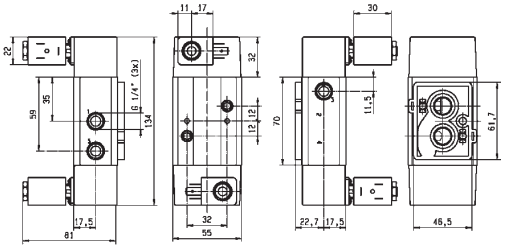

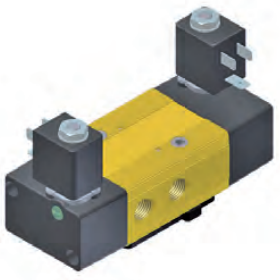

Drawing 7315

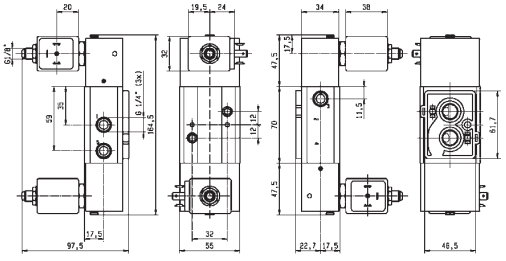

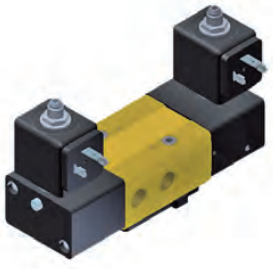

Drawing 7320

Tel: +45 63 12 83 00 | Email: ps@hymatik.com | www.hymatik.com | Hvidkaervej 27a, DK-5250 Odense SV, Denmark

5/2

3 AND 5 WAY VALVES NAMUR PILOT OPERATED

N01 N02 SERIES - SPOOL VALVES WITH NAMUR INTERFACE

ANODIZED ALUMINIUM

NAMUR

DUAL SOLENOIDS

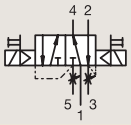

Port size	Orifice Ø	Flow factor	Operating Pressure Differential Min	Operating Pressure Differential Max(MOPD)		Fluid Temp. Min	Fluid Temp. Max	Seat Seal	Valve Ref.	Housing Ref.	Coil Ref.	ATEX Zone	Protection Mode	Power		Coil Group	Dwg. No.
BSP	mm	Qn l/min	bar	AC bar	DC bar	°C	°C							AC W	DC W		
1/8"-1/4"	4	400	2	10	10	-25	50	NBR	347N11 [124]	-	482606	1-21	Ex mb IIC T4/T5	2	2.5	1.1	7305
	4	400	2	10	10	-25	80	NBR	347N11 [124]	8993	488980	-	-	2	2.5	1.1	7305
	4	400	2	10	10	-25	65	NBR	347N31 [14]	-	495905	1-21	Ex db mb IIC T4	8	8	2.1	7297
	4	400	2	10	10	-25	60	NBR	347N31 [14]	2995	495870	2-22	Ex nc AC IIC T3/T4	8	9	2.1	7297
	4	400	2	10	10	-25	80	NBR	347N31 [14]	2995	481865	-	-	8	9	2.1	7297
	4	400	2	-	10	-25	55	NBR	347N3190 [4]	2995	483580.01	0-20	Ex ia IIC T6	-	0.5 to 3	7.0/8.0	8141
	4	400	2	-	10	-25	55	NBR	347N3190 [4]	-	495910	0-20	Ex ia IIC T4 to T6	-	0.3 to 3	7.0/8.0	8141
	4	400	2	10	10	-25	65	NBR	347N3190 [4]	-	495900	1-21	Ex db mb IIC T4 to T6	2.5	2	7.0/8.0	8141
	4	400	2	-	10	-25	55	NBR	347N3196 [3]	2995	483580.01	0-20	Ex ia IIC T6	-	0.5 to 3	8.0	7297
	4	400	2	-	10	-25	65	NBR	347N3196 [3]	-	495910	0-20	Ex ia IIC T4 to T6	-	0.3 to 3	8.0	7297
	4	400	2	10	10	-25	65	NBR	347N3196 [3]	-	495900	1-21	Ex db mb IIC T4 to T6	2.5	2	8.0	7297
	4	400	2	-	10	-25	65	NBR	347N3197 [13]	-	495910	0-20	Ex ia IIC T4 to T6	-	0.3 to 3	3.0/6.0/8.0	7297
	4	400	2	10	10	-25	65	NBR	347N3197 [13]	-	495900	1-21	Ex db mb IIC T4 to T6	2.5	2	3.0/6.0/8.0	7297
	4	400	2	-	10	-25	65	NBR	347N3197 [13]	2995	496125	2-22	Ex nAC IIC T5/T6	-	1.6	3.0/6.0/8.0	7297
	4	400	2	-	10	-25	65	NBR	347N3197 [13]	2995	482740	-	-	-	1.6	3.0/6.0/8.0	7297

Notes:
1. With manual override
2. With captured exhaust
3. Pilot with PUR seal
4. Pilot with FKM seal

For this page	Port size	Orifice (mm)	Qn (l/min)	MOPD (bar)	Fluid Temp (°C)	Amb Temp (°C)
From	1/8"-1/4"	4	400	10	-25	-25
To	1/8"-1/4"	4	400	10	80	50

IECEx certified

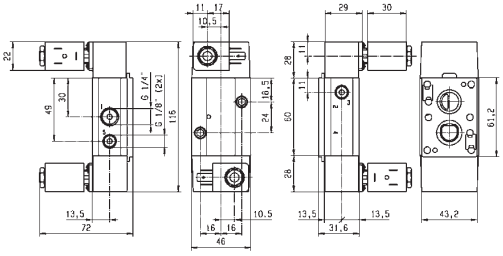

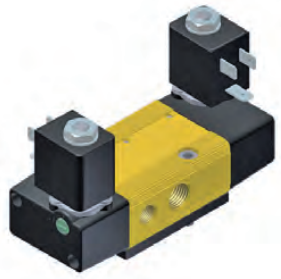

Drawing 7305

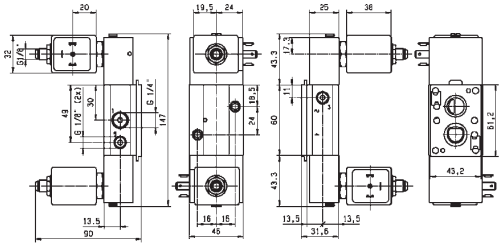



Drawing 7297

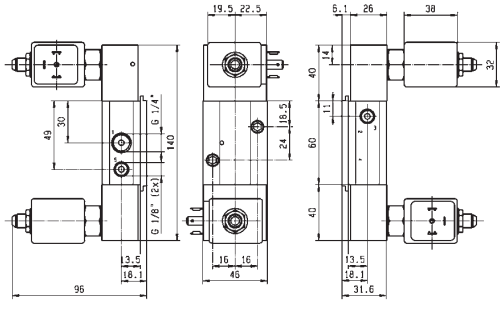

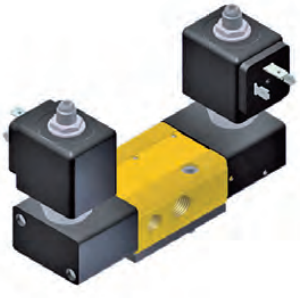

Drawing 8141

Parker Hannifin Corporation
Fluid Control Solutions Europe
Process Catalogue FCSE/1121/UK/V1.0

5/3 3 AND 5 WAY VALVES NAMUR PILOT OPERATED

N01 N02 SERIES - SPOOL VALVES WITH NAMUR INTERFACE

ANODIZED ALUMINIUM NAMUR

W1 CLOSED CENTER POSITION

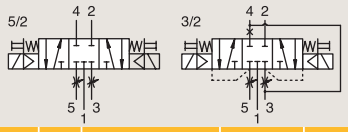

Port size BSP	Orifice Ø mm	Flow factor Qn l/min	Operating Pressure Differential Min bar	Max(MOPD) AC bar	Max(MOPD) DC bar	Fluid Temp. Min °C	Fluid Temp. Max °C	Seat Seal	Valve Ref.	Housing Ref.	Coil Ref.	ATEX Zone	Protection Mode	Power AC W	Power DC W	Coil Group	Dwg. No.
1/4"-1/8"	4	400	2	-	10	-25	65	NBR	342N3197 12	-	495910	0-20	Ex ia IIC T4 to T6	-	0.3 to 3	6.0/8.0	7297
	4	400	2	10	10	-25	65	NBR	342N3197 12	-	495900	1-21	Ex db mb IIC T4 to T6	2.5	2	6.0/8.0	7305
	4	400	2	-	10	-25	65	NBR	342N3197 12	2995	496125	2-22	Ex nAC IIC T5/T6	-	1.6	6.0/8.0	7305
	4	400	2	-	10	-25	65	NBR	342N3197 12	2995	482740	-	-	-	1.6	6.0/8.0	7305

Notes:
1. With manual override
2. Pilot seal in PUR

ANODIZED ALUMINIUM NAMUR

W1 CLOSED CENTER POSITION

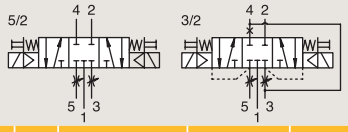

Port size BSP	Orifice Ø mm	Flow factor Qn l/min	Operating Pressure Differential Min bar	Max(MOPD) AC bar	Max(MOPD) DC bar	Fluid Temp. Min °C	Fluid Temp. Max °C	Seat Seal	Valve Ref.	Housing Ref.	Coil Ref.	ATEX Zone	Protection Mode	Power AC W	Power DC W	Coil Group	Dwg. No.
1/8"-1/4"	4	400	2	10	10	-25	50	NBR	342N11 123	-	482606	1-21	Ex mb IIC T4/T5	2	2.5	1.1	7305
	4	400	2	10	10	-25	80	NBR	342N11 123	8993	488980	-	-	2	2.5	1.1	7305

Notes:
1. With manual override
2. With captured exhaust
3. Pilot seal in FKM

IECEx certified

For this page	Port size	Orifice (mm)	Qn (l/min)	MOPD (bar)	Fluid Temp (°C)	Amb Temp (°C)
From	1/8"-1/4"	4	400	10	-25	-25
To	1/4"	4	400	10	80	50

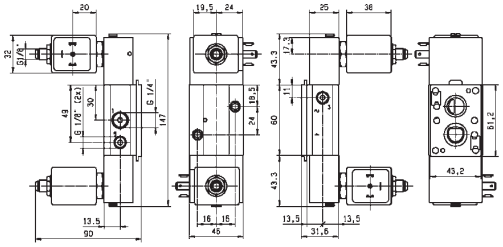



Drawing 7297

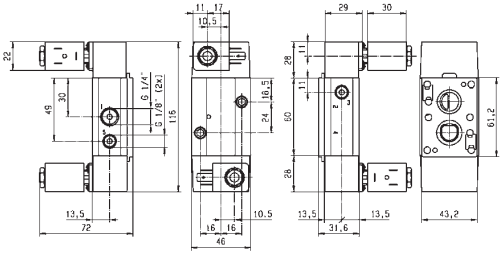

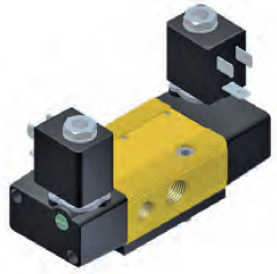

Drawing 7305

Tel: +45 63 12 83 00 | Email: ps@hymatik.com | www.hymatik.com | Hvidkaervej 27a, DK-5250 Odense SV, Denmark

A COMPLETE RANGE OF COILS, HOUSINGS AND ELECTRICAL PARTS FOR SOLENOID VALVES



Tel: +45 63 12 83 00 | Email: ps@hymatik.com | www.hymatik.com | Hvidkaervej 27a, DK-5250 Odense SV, Denmark

DEFINITIONS

HOUSINGS OR COIL ASSEMBLY KITS, COILS AND ELECTRICAL PARTS

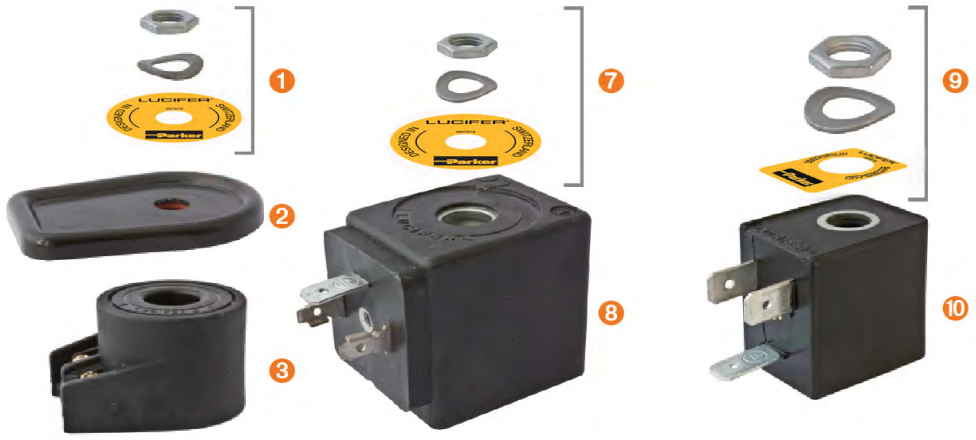



Housing:
We define a **housing** as the combination of the fixing elements including the nameplate 1, the cover 2 or the subplate 6 and the envelope itself 4 or 5 which protects the coil and its electrical components. The housings may be made of metal or plastic material.



Coil assembly kit:
The coil assembly kit 7 or 9 is the set comprising a plate, washer and nut. Sometimes coil assembly kits consist only of a nut or a special fixing device.

Coil:
This consists of the winding and its plastic moulding. There are three different types of coils distinguished by their shape and dimensions: 40 mm 3, 32 mm 8 and 22 mm 10.

Electric part:
The electric part is the set comprising the housing, the assembly kit and the coil.

Attention:
Any Parker FCSE coil or electrical part may be energised only when mounted on a valve.
Otherwise there is a risk of damaging the product and its surroundings (overheating, explosion, fire, etc.).

Tel: +45 63 12 83 00 | Email: ps@hymatik.com | www.hymatik.com | Hvidkaervej 27a, DK-5250 Odense SV, Denmark

TABLE OF CONTENT

INTRODUCTION

Index for Explosion Proof Electrical Parts 250

List of Coil Groups 251

COILS

Coils for DIN plug connection 254

Coils with flying leads 265

Coils with screw terminal 267

EXPLOSION PROOF ELECTRICAL PARTS

Level of protection "nc AC 272

Level of protection "db" 280

Level of protection "mb" 281

Level of protection "db mb" 286

Level of protection "eb" 291

Level of protection "eb mb" 292

Level of protection "ia" 295

HOUSINGS 302

COIL ACCESSORIES 306

COIL APPENDICES

Guidance chart for IS-Barriers 308

Table of voltage codes for coils and electrical parts 310

INDEX FOR EXPLOSION PROOF ELECTRICAL PARTS

Coil Reference	Coil Group	Designation	Power DC Pn (W)	Power AC Pn (W)	Ambient Temperature	UL	Degree of Protection	ATEX or NEMA 4X Protection (Gas)	Page
496637	1.2	Explosion proof electrical part "nc AC", 22 mm, double frequency	3.0	3.0	-40°C to +50°C	-	IP65	II 3 GD Ex tc IIIC T 95°C	273
495880	2.0/2.2	Explosion proof electrical part "nc AC", 32 mm	14.0	14.0	-40°C to +50°C	-	IP65	II 3 GD Ex nc AC IIC T3	277
496155	2.0/2.2	Explosion proof increased safety electrical part "nc AC", 50 mm	14.0	14.0	-40°C to +65°C	-	IP67	II 3 GD Ex nc AC IIC T3	279
495915	4.0	Explosion proof increased safety electrical part "nc AC", 50 mm	13.0	11.0	-40°C to +65°C	-	IP67	II 3 GD Ex nc AC IIC T3	278
495870	2.0/2.1	Explosion proof electrical part "nc AC", 32 mm	9.0	8.0	-40°C to +50°C	-	IP65	II 3 GD Ex nc AC IIC T3 / T4	274
495875	2.0/2.1	Explosion proof electrical part "nc AC", 32 mm	7.0	6.0	-40°C to +50°C	-	IP65	II 3 GD Ex nc AC IIC T3 / T4	276
496110	2.0/2.1	Explosion proof electrical part "nc AC", 32 mm	-	9.0	-40°C to +50°C	-	IP65	II 3 GD Ex nc AC IIC T3 / T4	274
495865	1.1	Explosion proof electrical part "nc AC", low power, 22 mm	2.5	2.0	-40°C to +50°C	-	IP65	II 3 GD Ex nc AC IIC T5	272
496125	6.0	Explosion proof electrical part "nc AC", low power, 32 mm	1.6	-	-40°C to +50°C	-	IP65	II 3 GD Ex nc AC IIC T5 / T6	275
492670	2.0/2.1	Explosion proof encapsulated electrical part "mb", 32 mm	9.0	8.0	-40°C to +50°C	-	IP65	II 2 GD Ex mb II T4	282
482605	1.1	Explosion proof encapsulated electrical part "mb", 32 mm	5.0	4.0	-40°C to +65°C	-	IP65	II 2 GD Ex mb II T4 / T5	281
482606	1.1	Explosion proof encapsulated electrical part "mb", low power, 32 mm	2.5	2.0	-40°C to +65°C	-	IP65	II 2 GD Ex mb II T4 / T5	281
492070	2.0/2.1	Explosion proof encapsulated electrical part "mb", with water proof metal housing, 50 mm	8.0	9.0	-40°C to +65°C	-	IP67	II 2 GD Ex mb II T4 / T5	283
HZ10	2.0/2.1	Explosion proof encapsulated electrical part "mb", double frequency	8.0	8.0	-40°C to +50°C	-	IP65	II 2 GD Ex mb II T3 / T5	284
HZ11	2.0/2.2	Explosion proof encapsulated electrical part "mb", double frequency	14.0	14	-40°C to +50°C	-	IP65	II 2 GD Ex mb II T3 / T5	285
497105	10.3	Flame proof electrical part "db", 50 mm	8.0	8.0	-50°C to +80°C	-	IP66	Ex db IIC T4 / T5 / T6	280
493640	2.0/2.1	Flame proof encapsulated electrical part "db mb", double frequency	8.0	8.0	-40°C to +75°C	-	IP65	II 2 GD Ex db mb IIC T4 / T5	290
495905	2.0/2.1	Flame proof encapsulated electrical part "db mb", 37 mm	8.0	8.0	-40°C to +65°C	-	IP67	II 2 GD Ex db mb IIC T4	287
496560	10.1	Flame proof encapsulated electrical part "db mb", 37 mm	8.0	8.0	-40°C to +65°C	-	IP67	II 2 GD Ex db mb IIC T4	288
496800	10.1	Flame proof encapsulated electrical part "db mb", 37 mm	8.0	8.0	-40°C to +65°C	-	IP67	II 2 GD Ex db mb IIC T4	289
495900	6.0	Flame proof encapsulated electrical part "db mb", low power, 37 mm	2.0	2.5	-40°C to +65°C	-	IP67	II 2 GD Ex db mb IIC T4 / T5 / T6	286
496555	10.2	Flame proof encapsulated electrical part "db mb", 37 mm	6.0	6.0	-40°C to +65°C	-	IP67	II 2 GD Ex db mb IIC T4 / T5 / T6	288
496700	10.2	Flame proof encapsulated electrical part "db mb", 37 mm	6.0	6.0	-40°C to +65°C	-	IP67	II 2 GD Ex db mb IIC T4 / T5 / T6	289
494040	2.0/2.1	Explosion proof increased safety electrical part "eb", 50 mm	8.0	8.0	-40°C to +90°C	-	IP67	II 2 GD Ex eb IIC T3 / T4	291
483371	2.0/2.1	Explosion proof increased safety electrical part "eb", 50 mm	8.0	8.0	-40°C to +65°C	-	IP67	II 2 GD Ex eb IIC T4	291
492190	2.0/2.1	Explosion proof increased safety and encapsulated elect. part "eb", 50 mm	9.0	11.0	-40°C to +75°C	-	IP66	II 2 GD Ex eb mb II T3 / T4	294
492310	10.1	Explosion proof increased safety and encapsulated electrical part "eb", 50 mm	6.0	6.0	-40°C to +75°C	-	IP66	II 2 GD Ex eb mb II T4 / T5	292
492210	9.0	Explosion proof increased safety and encapsulated electrical part "eb", " Booster", 50 mm	1.0 to 1.8	-	-40°C to +75°C	-	IP66	II 2 GD Ex eb mb II T5 / T6	293
495910	8.0	Explosion proof intrinsically safe electrical part "ia", "booster", 37 mm	0.3 to 1.2	-	-40°C to +80°C	-	IP67	II 1 GD Ex ia IIC T6 / T5 / T4	296
496565	9.0	Explosion proof intrinsically safe electrical part "ia", " Booster", 37 mm	0.77 to 2.58	-	-40°C to +80°C	-	IP67	II 1 GD Ex ia IIC T6 / T5 / T4	297
483580.01	7.0	Explosion proof intrinsically safe electrical part "ia", 32 mm	3.0	-	-40°C to +55°C	-	IP65	II 1 GD Ex ia IIC T6	295
488650.01	7.0	Explosion proof intrinsically safe electrical part "ia", 50 mm	0.3 to 3.0	-	-40°C to +65°C	-	IP66	II 1 GD Ex ia IIC T6	300
492965.01	9.0	Explosion proof intrinsically safe electrical part "ia", " Booster", 50 mm	0.3 to 2.3	-	-40°C to +65°C	-	IP66	II 1 GD Ex ia IIC T6	298
482870.01	12.0	Explosion proof intrinsically safe electrical part "ia", 50 mm	3.0	-	-40°C to +65°C	-	IP66	II 1 GD Ex ia IIC T6	299

Tel: +45 63 12 83 00 | Email: ps@hymatik.com | www.hymatik.com | Hvidkaervej 27a, DK-5250 Odense SV, Denmark

LIST OF COIL GROUPS

Parker coils and electrical parts are classified by groups determining their compatibility with Parker solenoid valves.

Group	For application with
1.1	Standard valves or on 2000 Series with standard pilot
1.2	Standard valves or on 2000 Series for high flow
2.0	Standard valves or on 7000 Series with standard pilot
2.1	Standard valves or on 7000 Series, for coils 8 - 9 W
2.2	Standard valves or on 7000 Series, for coils 14 W
3.0	Standard valves or on 7000 Series with reduced power
4.0	Standard valves or on 7000 Series, for bistable (Impulse) coils or electrical parts
6.0	Special valves "97" or on 7000 Series, for Intrinsicaly safe coils or electrical parts
7.0	Special valves "90", for coils and intrinsically safe electrical parts
8.0	Special valves "97" or on 7000 Series, for Intrinsicaly safe coils or electrical parts with booster
9.0	Special valves "xx" or on 9000 Series, for Intrinsicaly safe coils or electrical parts with booster
10.1	Standard valves or on 9000 Series with standard pilot
10.2	Standard valves or on 9000 Series "db mb"
10.3	Special valves or on 8000 Series "d"
12.0	Standard valves or on 9000 Series with manual reset

Tel: +45 63 12 83 00 | Email: ps@hymatik.com | www.hymatik.com | Hvidkaervej 27a, DK-5250 Odense SV, Denmark

Tel: +45 63 12 83 00 | Email: ps@hymatik.com | www.hymatik.com | Hvidkaervej 27a, DK-5250 Odense SV, Denmark

TABLE OF CONTENT

INTRODUCTION

Index for Explosion Proof Electrical Parts 250

List of Coil Groups 251

COILS

Coils for DIN plug connection 254

Coils with flying leads 265

Coils with screw terminal 267

EXPLOSION PROOF ELECTRICAL PARTS

Level of protection "nc AC 272

Level of protection "db" 280

Level of protection "mb" 281

Level of protection "db mb" 286

Level of protection "eb" 291

Level of protection "eb mb" 292

Level of protection "ia" 295

HOUSINGS 302

COIL ACCESSORIES 306

COIL APPENDICES

Guidance chart for IS-Barriers 308

Table of voltage codes for coils and electrical parts 310

COILS 32 mm

These coils can be mounted with every Parker solenoid valves corresponding to the specified Coil Group.
See column "Coil Group" within valve pages.

This is an encapsulated assembly comprising a coil, integral magnetic iron path and snap-on plug connection.

The synthetic material encapsulation provides an effective compact housing, offering full protection against dust, oil, water, etc.
Ease of mounting in confined space - offers shock and corrosion protection - simplifies conversion of existing equipment to other requirements, etc.
Coils conform to the IEC/CENELEC safety standards and complies with European low-voltage directive.



Specification			Standard				Double frequency	
Ref. (without DIN plug) Ref. (with DIN plug)			481865				483510	
Coil Group			2.0 / 2.1					
Degree of protection			**IP65** according to IEC / EN 60529 standards (with DIN plug).					
Class of insulation			F 155°C					
Electrical connection			The coil is connected with a 2 P + E plug according to EN 175301-803 type A					
Ambient temperature			-40°C to +50°C The application is limited also by the temperature range of the valve.					
Elect. Power	DC	**Pn** (hot)	9 W				-	
		P (cold) 20°C	12 W				-	
	AC	**Pn** (holding)	8 W				9 W	
		Attraction cold	26 VA (9 W)				32 VA (10 W)	
Weight			130 g (without plug)					
Voltages "Un"			VAC/Hz	Code	VDC	Code	VAC/Hz	Code
-10% to +10% of the Un			24/50 48/50 110/50 220-230/50	A2 A4 A5 3D	24 48 110	C2 C4 C5	24/50, 24/60 48/50, 48/60 110-115/50, 120/60 220-240/50, 240/60	P0 S4 S5 S6

To Order a Coil choose Coil Ref + Voltage Code, example: **481865** for **24 VDC = 481865C2**
More voltage possibilities can be found in the table of voltage codes at the end of the coil section.

These coils must be used with suitable housings, see example below:

The coil assembly kit **Ref. 2995** corresponds to the "housing".

It is composed of a nameplate giving details of the valve type, a round washer and a nut to ensure the fixing between 32 mm coil and the valve.



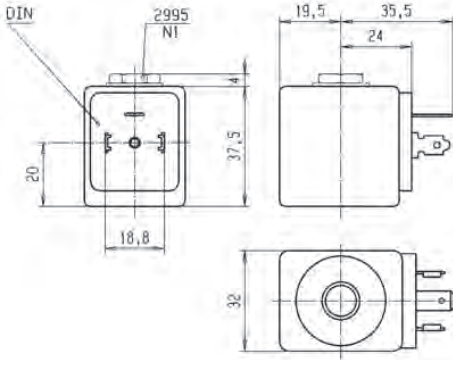

Parker Hannifin Corporation
Fluid Control Solutions Europe
Process Catalogue FCSE/1121/UK/V1.0

Tel: +45 63 12 83 00 | Email: ps@hymatik.com | www.hymatik.com | Hvidkaervej 27a, DK-5250 Odense SV, Denmark

COIL GROUP
2.0/2.1
2.2

COILS FOR DIN PLUG CONNECTION

RoHS CE

HIGH TEMPERATURE COILS 32 mm

These coils can be mounted with every Parker solenoid valves corresponding to the specified Coil Group.
See column "Coil Group" within valve pages.

This is an encapsulated assembly comprising a coil, integral magnetic iron path and snap-on plug connection.

The synthetic material encapsulation provides an effective compact housing, offering full protection against dust, oil, water, etc.
Ease of mounting in confined space - offers shock and corrosion protection - simplifies conversion of existing equipment to other requirements, etc.
Coils conform to the IEC/CENELEC safety standards and complies with European low-voltage directive.



Specification			High temperature				High temp. + high power			
Ref. (without DIN plug) Ref. (with DIN plug)			492453				492425			
Coil Group			2.0 / 2.1				2.0 / 2.2			
Degree of protection			**IP65** according to IEC / EN 60529 standards (with DIN plug).							
Class of insulation			H 180°C							
Electrical connection			The coil is connected with a 2 P + E plug according to EN 175301-803 type A							
Ambient temperature			-40°C to +50°C The application is limited also by the temperature range of the valve.							
Elect. Power	DC	**Pn** (hot)	9 W				14 W			
		P (cold) 20°C	12 W				21 W			
	AC	**Pn** (holding)	8 W				14 W			
		Attraction cold	26 VA (9 W)				55 VA (18 W)			
Weight			130 g (without plug)							
Voltages "Un"			VAC/Hz	Code	VDC	Code	VAC/Hz	Code	VDC	Code
-10% to +10% of the Un			24/50 110/50 220/50-230/50	A2 A5 3D	24 110	C2 C5	24/50 110/50 230/50	A2 A5 F4	24	C2

To Order a Coil choose Coil Ref + Voltage Code, example: **492453** for **24VDC= 492453C2**
More voltage possibilities can be found in the table of voltage codes at the end of the coil section.

These coils must be used with suitable housings, see example below:

The coil assembly kit **Ref. 2995** corresponds to the "housing".

It is composed of a nameplate giving details of the valve type, a round washer and a nut to ensure the fixing between 32 mm coil and the valve.



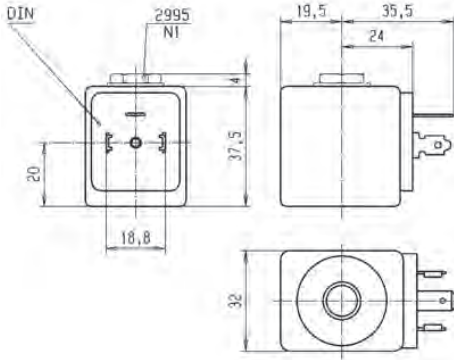

COILS FOR DIN PLUG CONNECTION

REDUCED POWER COIL 32 mm

These coils can be mounted with every Parker solenoid valves corresponding to the specified Coil Group.
See column "Coil Group" within valve pages.

This is an encapsulated assembly comprising a coil, integral magnetic iron path and snap-on plug connection.

The synthetic material encapsulation provides an effective compact housing, offering full protection against dust, oil, water, etc.
Ease of mounting in confined space - offers shock and corrosion protection - simplifies conversion of existing equipment to other requirements, etc.
Coils conform to the IEC/CENELEC safety standards and complies with European low-voltage directive.



Specification			Reduced power			
Ref. (without DIN plug) Ref. (with DIN plug)			482730 482735			
Coil Group			3.0			
Degree of protection			**IP65** according to IEC / EN 60529 standards (with DIN plug).			
Class of insulation			F 155°C			
Electrical connection			The coil is connected with a 2 P + E plug according to EN 175301-803 type A			
Ambient temperature			-40°C to +50°C The application is limited also by the temperature range of the valve.			
Elect. Power	DC	**Pn** (hot)	7 W			
		P (cold) 20°C	9 W			
	AC	**Pn** (holding)	6 W			
		Attraction cold	20 VA (7 W)			
Weight			130 g (without plug)			
Voltages "Un" -10% to +10% of the Un			VAC/Hz	Code	VDC	Code
			220-230/50	3D	24	C2

To Order a Coil choose Coil Ref + Voltage Code, example: **482730** for **24VDC** = **482730C2**
More voltage possibilities can be found in the table of voltage codes at the end of the coil section.

These coils must be used with suitable housings, see example below:

The coil assembly kit **Ref. 2995** corresponds to the "housing".

It is composed of a nameplate giving details of the valve type, a round washer and a nut to ensure the fixing between 32 mm coil and the valve.



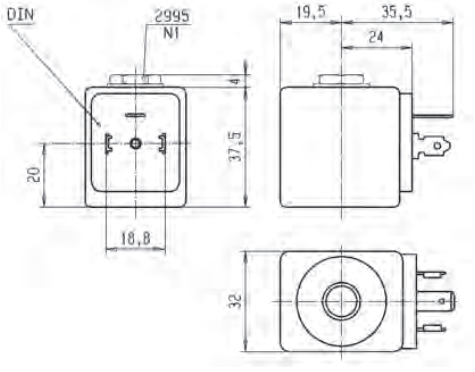

Parker Hannifin Corporation
Fluid Control Solutions Europe
Process Catalogue FCSE/1121/UK/V1.0

Tel: +45 63 12 83 00 | Email: ps@hymatik.com | www.hymatik.com | Hvidkaervej 27a, DK-5250 Odense SV, Denmark

COIL GROUP

6.0

COILS FOR DIN PLUG CONNECTION

RoHS CE

LOW POWER COIL 32 mm

These coils can be mounted with every Parker solenoid valves corresponding to the specified Coil Group.
See column "Coil Group" within valve pages.

This is an encapsulated assembly comprising a coil, integral magnetic iron path and snap-on plug connection.

The synthetic material encapsulation provides an effective compact housing, offering full protection against dust, oil, water, etc.
Ease of mounting in confined space - offers shock and corrosion protection - simplifies conversion of existing equipment to other requirements, etc.
Coils conform to the IEC/CENELEC safety standards and complies with European low-voltage directive.



Specification			Miniwatt	
Reference (without DIN plug) Reference (with DIN plug)			**482740**	
Coil Group			**6.0**	
Degree of protection			**IP65** according to IEC / EN 60529 standards (with DIN plug).	
Class of insulation			F 155°C	
Electrical connection			The coil is connected with a 2 P + E plug according to EN 175301-803 type A	
Ambient temperature			-40°C to +50°C The application is limited also by the temperature range of the valve.	
Elect. Power	DC	**Pn** (hot)	1.6 W	
		P (cold) 20°C	2.1 W	
	AC	**Pn** (holding)	-	
		Attraction cold	-	
Weight			130 g (without plug)	
Voltages "Un" -10% to +10% of the Un			VDC 24	Code C2

To Order a Coil choose Coil Ref + Voltage Code, example: **482740** for **24VDC** = **482740C2**
More voltage possibilities can be found in the table of voltage codes at the end of the coil section.

These coils must be used with suitable housings, see example below:

The coil assembly kit **Ref. 2995** corresponds to the "housing".

It is composed of a nameplate giving details of the valve type, a round washer and a nut to ensure the fixing between 32 mm coil and the valve.



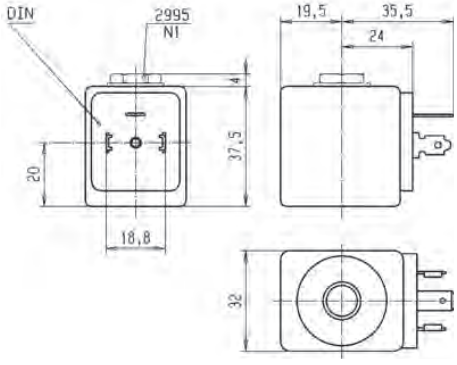

UL COIL 32 mm

This coil can be mounted with every Parker solenoid valves corresponding to the specified Coil Group.
See column "Coil Group" within valve pages.

This is an encapsulated assembly comprising a coil, integral magnetic iron path and snap-on plug connection.

The synthetic material encapsulation provides an effective compact housing, offering full protection against dust, oil, water, etc.
Ease of mounting in confined space - offers shock and corrosion protection - simplifies conversion of existing equipment to other requirements, etc.
Coils conform to the IEC/CENELEC safety standards and complies with European low-voltage directive.
DIN plug connector to be ordered separately (see coil accessories section)



Specification			UL-recognized coil - UL File E200N - designation AMIF			
Reference (without DIN plug)			491514			
Coil Group			2.0 / 2.1			
Degree of protection			**IP65** according to IEC / EN 60529 standards (with DIN plug).			
Class of insulation			F (155°C)			
Electrical connection			The coil is connected with a 2 P + E plug according to EN 175301-803 type A			
Ambient temperature			-40°C to 50°C The application is limited also by the temperature range of the valve.			
Elect. Power	DC	**Pn** (hot)	-		12 W	
		P (cold) 20°C	-		16 W	
	AC	**Pn** (holding)	11 W		-	
		Attraction cold	40 VA (13 W)		-	
Weight			130 g (without plug)			
Voltages "Un"			VAC/Hz	Code	VDC	Code
- 15% to +10% of the Un			110/50-120/60 220/50-240/60	P3 Q3	24	C2

To Order a Coil choose Coil Ref + Voltage Code, example: **491514** for **24VDC** = **491514C2**
More voltage possibilities can be found in the table of voltage codes at the end of the coil section.

These coils must be used with suitable housings, see example below:

The coil assembly kit **Ref. 2995** with non UL valve and Ref. 2995.03 with UL valve correspond to the "housing". It is composed of a nameplate giving details of the valve type,

a round washer and a nut to ensure the fixing between 32 mm coil and the valve.



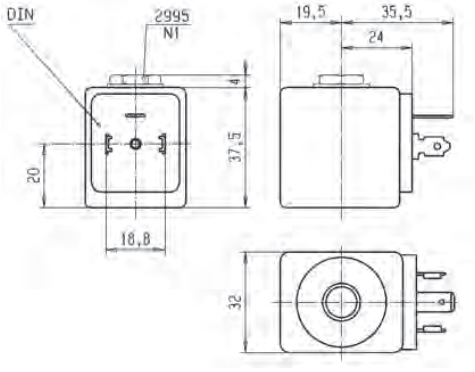

Parker Hannifin Corporation
Fluid Control Solutions Europe
Process Catalogue FCSE/1121/UK/V1.0

Tel: +45 63 12 83 00 | Email: ps@hymatik.com | www.hymatik.com | Hvidkaervej 27a, DK-5250 Odense SV, Denmark

COIL GROUP

1.1

COILS FOR DIN PLUG CONNECTION

RoHS CE

COILS 22 mm

These coils can be mounted with every Parker solenoid valves corresponding to the specified Coil Group.
See column "Coil Group" within valve pages.

This coil is designed for valves equipped with a miniature tube assembly (2000 series valves). This is an encapsulated assembly comprising a coil, integral magnetic iron path and snap-on plug connection.

The synthetic material encapsulation provides an effective compact housing, offering full protection against dust, oil, water, etc.
Ease of mounting in confined space - offers shock and corrosion protection - simplifies conversion of existing equipment to other requirements, etc.
Coil conforms to the IEC/CENELEC safety standards and complies with European low-voltage directive.



Specification			Low power			High power			
Ref. (without DIN plug) Ref. (with DIN plug)			488980			481180			
Coil Group			1.1						
Degree of protection			**IP65** according to IEC / EN 60529 standards (with DIN plug).						
Class of insulation			F 155°C						
Electrical connection			The coil is connected with a 2 P + E plug according to EN 175301-803 type B.						
Ambient temperature			-40°C to +50°C The application is limited also by the temperature range of the valve.						
Elect. Power	DC	**Pn** (hot)	2.5 W			5 W			
		P (cold) 20°C	3 W			6.5 W			
	AC	**Pn** (holding)	2 W			4 W			
		Attraction cold	5.7 VA (2.5 W)			8.9 VA (5 W)			
Weight			100 g with DIN Plug						
Voltages "Un"			VAC/Hz	Code	VDC	Code	VAC/Hz	Code	VDC	Code
-10% to +10% of the Un			24/50 48/50 110/50-115/50 220/50-230/50	A2 A4 0A 3D	24 48 110	C2 C4 C5	24/50 110/50-115/50 220/50-230/50	A2 0A 3D	24	C2

To Order a Coil choose Coil Ref + Voltage Code, example: **488980** for **24VDC** = **488980C2**
More voltage possibilities can be found in the table of voltage codes at the end of the coil section.

These coils must be used with suitable housings, see example below:

The coil assembly kit **Ref. 8993** corresponds to the valve housings. It is composed of a nameplate with the details of the valve type, a washer and a nut to secure the 22 mm coil to the valve.



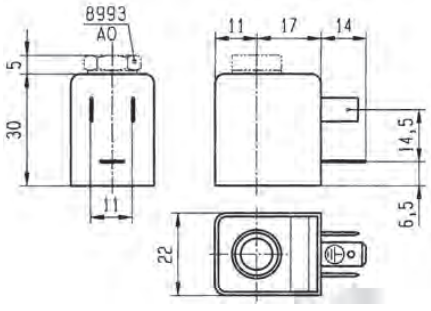

Tel: +45 63 12 83 00 | Email: ps@hymatik.com | www.hymatik.com | Hvidkaervej 27a, DK-5250 Odense SV, Denmark

COILS FOR DIN PLUG CONNECTION

UL COIL 22 mm

These coils can be mounted with every Parker solenoid valves corresponding to the specified Coil Group.
See column "Coil Group" within valve pages.

This coil is designed for valves equipped with a miniature tube assembly (2000 series valves). This is an encapsulated assembly comprising a coil, integral magnetic iron path and snap-on plug connection.

The synthetic material encapsulation provides an effective compact housing, offering full protection against dust, oil, water, etc.
Ease of mounting in confined space - offers shock and corrosion protection - simplifies conversion of existing equipment to other requirements, etc.
Coil conforms to the IEC/CENELEC safety standards and complies with European low-voltage directive.



Specification			Standard UL (only if used with 321K, 121M, 131M valves)			
Reference (without DIN plug) Reference (with DIN plug)			492912			
Coil Group			1.1			
Degree of protection			**IP65** according to IEC / EN 60529 standards (with DIN plug).			
Class of insulation			A 105°C for UL/CSA			
Electrical connection			The coil is connected with a 2 P + E plug according to EN 175301-803 type B.			
Ambient temperature			-40°C to +50°C The application is limited also by the temperature range of the valve.			
Elect. Power	DC	**Pn** (hot)	4 W			
		P (cold) 20°C	4.5 W			
	AC	**Pn** (holding)	3 W			
		Attraction cold	7.5 VA (4 W)			
Weight			100 g with DIN Plug			
Voltages "Un" - 15% to +10% of the Un			VAC/Hz	Code	VDC	Code
			230/50-240/60	T1	24	C2

To Order a Coil choose Coil Ref + Voltage Code, example: **492912** for **24VDC** = **492912C2**
More voltage possibilities can be found in the table of voltage codes at the end of the coil section.

These coils must be used with suitable housings, see example below:

The coil assembly kit **Ref. 8993** corresponds to the valve housings. It is composed of a nameplate with the details of the valve type, a washer and a nut to secure the 22 mm coil to the valve.



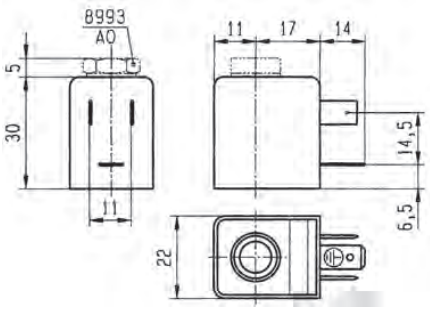

Parker Hannifin Corporation
Fluid Control Solutions Europe
Process Catalogue FCSE/1121/UK/V1.0

Tel: +45 63 12 83 00 | Email: ps@hymatik.com | www.hymatik.com | Hvidkaervej 27a, DK-5250 Odense SV, Denmark

COIL GROUP
1.1

COILS FOR DIN PLUG CONNECTION

RoHS CE

DOUBLE FREQUENCY COIL 22 mm

This coil can be mounted with every Parker solenoid valves corresponding to the specified Coil Group.
See column "Coil Group" within valve pages.

This coil is designed for valves equipped with a miniature tube assembly (2000 series valves). This is an encapsulated assembly comprising a coil, integral magnetic iron path and snap-on plug connection.

The synthetic material encapsulation provides an effective compact housing, offering full protection against dust, oil, water, etc.
Ease of mounting in confined space - offers shock and corrosion protection - simplifies conversion of existing equipment to other requirements, etc.
Coil conforms to the IEC/CENELEC safety standards and complies with European low-voltage directive.

DIN plug connector to be ordered separately (see coil accessories section).



Specification			Double frequency	
Reference (without DIN plug)			483590	
Coil group			1.1	
Degree of protection			**IP65** according to IEC / EN 60529 standards (with DIN plug).	
Class of insulation			F 155°C	
Electrical connection			The coil is connected with a 2 P + E plug according to EN 175301-803 type B.	
Ambient temperature			-40°C to +50°C The application is limited also by the temperature range of the valve.	
Elect. Power	DC	**Pn** (hot)	-	
		P (cold) 20°C	-	
	AC	**Pn** (holding)	3 W	
		Attraction cold	7.5 VA (4 W)	
Weight			100 g with DIN Plug	
Voltages "Un"			VAC/Hz	Code
-10% to +10% of the Un			24/50-60 48/50-60 110-115/50, 120/60 220-240/50, 240/60	P0 S4 S5 S6

To Order a Coil choose Coil Ref + Voltage Code, example: **483590** for **24/50,24/60** = **483590P0**
More voltage possibilities can be found in the table of voltage codes at the end of the coil section.

These coils must be used with suitable housings, see example below:

The coil assembly kit **Ref. 8993** corresponds to the valve housings. It is composed of a nameplate with the details of the valve type, a washer and a nut to secure the 22 mm coil to the valve.



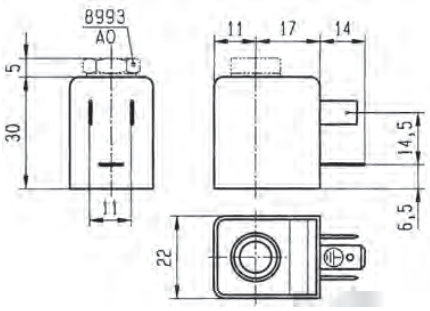

Parker Hannifin Corporation
Fluid Control Solutions Europe
Process Catalogue FCSE/1121/UK/V1.0

DOUBLE FREQUENCY COIL 22 mm

This coil can be mounted with every Parker solenoid valves corresponding to the specified Coil Group.
See column "Coil Group" within valve pages.

This coil is designed for valves equipped with a miniature tube assembly (2000 series valves). This is an encapsulated assembly comprising a coil, integral magnetic iron path and snap-on plug connection.

The synthetic material encapsulation provides an effective compact housing, offering full protection against dust, oil, water, etc.
Ease of mounting in confined space - offers shock and corrosion protection - simplifies conversion of existing equipment to other requirements, etc.
Coil conforms to the IEC/CENELEC safety standards and complies with European low-voltage directive.
DIN plug connector to be ordered separately (see coil accessories section).



Specification			Double frequency			
Reference (without DIN Plug)			496131			
Coil group			1.2			
Degree of protection			**IP65** according to IEC / EN 60529 standards (with DIN plug).			
Class of insulation			F 155°C			
Electrical connection			The coil is connected with a 2 P + E plug according to EN 175301-803 type B.			
Ambient temperature			-40°C to +50°C The application is limited also by the temperature range of the valve.			
Elect. Power	DC	**Pn** (hot)	3 W			
		P (cold) 20°C	-			
	AC	**Pn** (holding)	3 W			
		Attraction cold	-			
Weight			60 g			
Voltages "Un"			VAC/Hz	Code	VDC	Code
-10% to +10% of the Un			24/50-60	P0	24 V	C2
			110/50-60	P2	48 V	C4
			230/50-60	P9	110 V	C5
			48/50-60	S4		

To Order a Coil choose Coil Ref + Voltage Code, example: **496131** for **24VDC** = **496131C2**
More voltage possibilities can be found in the table of voltage codes at the end of the coil section.

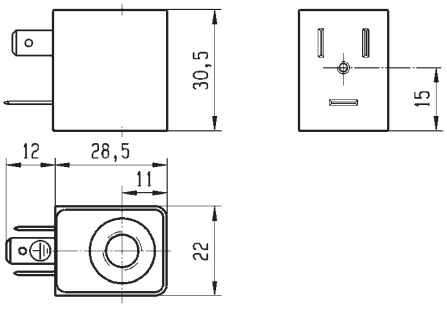

Parker Hannifin Corporation
Fluid Control Solutions Europe
Process Catalogue FCSE/1121/UK/V1.0

Tel: +45 63 12 83 00 | Email: ps@hymatik.com | www.hymatik.com | Hvidkaervej 27a, DK-5250 Odense SV, Denmark

COIL GROUP

1.2

COILS FOR DIN PLUG CONNECTION

RoHS CE

DOUBLE FREQUENCY COIL 22 mm

This coil can be mounted with every Parker solenoid valves corresponding to the specified Coil Group.
See column "Coil Group" within valve pages.

This coil is designed for valves equipped with a miniature tube assembly (2000 series valves). This is an encapsulated assembly comprising a coil, integral magnetic iron path and snap-on plug connection.

The synthetic material encapsulation provides an effective compact housing, offering full protection against dust, oil, water, etc.
Ease of mounting in confined space - offers shock and corrosion protection - simplifies conversion of existing equipment to other requirements, etc.
Coil conforms to the IEC/CENELEC safety standards and complies with European low-voltage directive.

DIN plug connector included.



Specification			Double frequency			
Reference			496482			
Coil group			1.2			
Degree of protection			**IP65** according to IEC / EN 60529 standards (with DIN plug).			
Class of insulation			F 155°C			
Electrical connection			The coil is connected with a 2 P + E plug according to EN 175301-803 type B.			
Ambient temperature			-40°C to +50°C The application is limited also by the temperature range of the valve.			
Elect. Power	DC	**Pn** (hot)	3 W			
		P (cold) 20°C	-			
	AC	**Pn** (holding)	3 W			
		Attraction cold	-			
Weight			75 g			
Voltages "Un"			VAC/Hz	Code	VDC	Code
-10% to +10% of the Un			24/50-60	P0	24 V	C2
			110/50-60	P2	48 V	C4
			230/50-60	P9	110 V	C5
			48/50-60	S4		

To Order a Coil choose Coil Ref + Voltage Code, example: **496482** for **24VDC** = **496482C2**
More voltage possibilities can be found in the table of voltage codes at the end of the coil section.

"The housing kit is already included in the valve reference, it is not needed to order it separately."

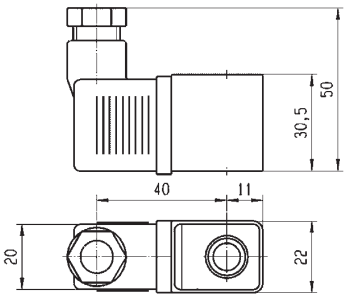

COIL FOR OIL AND GAS 37 mm

This coil can be mounted with every Parker solenoid valves corresponding to the specified Coil Group.
See column "Coil Group" within valve pages.
This is an encapsulated assembly comprising a coil, integral magnetic iron path and snap-on plug connection.
The synthetic material encapsulation provides an effective compact housing, offering full protection against dust, oil, water, etc.
Ease of mounting in confined space - offers shock and corrosion protection - simplifies conversion of existing equipment to other requirements, etc.
Coils conform to the IEC/CENELEC safety standards and complies with European low-voltage directive.
DIN plug connector included.



Specification			Coil for Oil and Gas			
Reference (with DIN plug)			496895			
Coil group			10.1			
Degree of protection			**IP65** according to IEC / EN 60529 standards			
Class of insulation			H 180°C			
Electrical connection			With DIN plug 492459 (AC) or 486586 (DC)			
Ambient temperature			-40°C to +50°C The application is limited also by the temperature range of the valve.			
Elect. Power	DC	**Pn** (hot)	8 W			
		P (cold) 20°C	-			
	AC	**Pn** (holding)	8 W			
		Attraction cold	-			
Weight			273 g			
Voltages "Un"			VAC/Hz	Code	VDC	Code
-10% to +10% of the Un			230/50-60 24/50-60	P9 P0	24 48	C2 C4 C5

To Order a Coil choose Coil Ref + Voltage Code, example: **496895** for **24VDC** = **496895C2**
More voltage possibilities can be found in the table of voltage codes at the end of the coil section.
The fixing nut (housing kit) is already inclued in the coil kit.

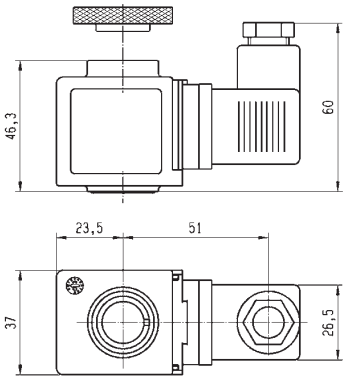

Parker Hannifin Corporation
Fluid Control Solutions Europe
Process Catalogue FCSE/1121/UK/V1.0

Tel: +45 63 12 83 00 | Email: ps@hymatik.com | www.hymatik.com | Hvidkaervej 27a, DK-5250 Odense SV, Denmark

COIL 32 mm IP67

This coil can be mounted with every Parker solenoid valves corresponding to the specified Coil Group.
See column "Coil Group" within valve pages.

This is an encapsulated assembly comprising a coil, integral magnetic iron path and snap-on plug connection.

The synthetic material encapsulation provides an effective compact housing, offering full protection against dust, oil, water, etc.
Ease of mounting in confined space - offers shock and corrosion protection - simplifies conversion of existing equipment to other requirements, etc.
Coils conform to the IEC/CENELEC safety standards and complies with European low-voltage directive.



Specification			Coil with two 500 mm flying leads			
Reference			496081			
Coil Group			2.0 / 2.1			
Degree of protection			**IP67** according to IEC / EN 60529 standards			
Class of insulation			F 155°C			
Ambient temperature			- 10 °C to +50°C The application is limited also by the temperature range of the valve.			
Elect. Power	DC	**Pn** (hot)	9 W			
		P (cold) 20°C	-			
	AC	**Pn** (holding)	9 W			
		Attraction cold	32 VA			
Weight			180 g			
Voltages "Un"			VAC/Hz	Order Number	VDC	Order Number
-10% to +10% of Un for AC - 5 % to + 10 % for Un DC			24/50 - 24/60 110-115/50 - 120/60 220-240/50 - 240/60	P0 S5 S6	24 12	C2 C1

To Order a Coil: Use 6 digits ordering number **- Code Example:** 496081 for 24VDC = **496081C2**
More voltage possibilities can be found in the table of voltage codes at the end of the coil section.

Please order housing Ref: 2995

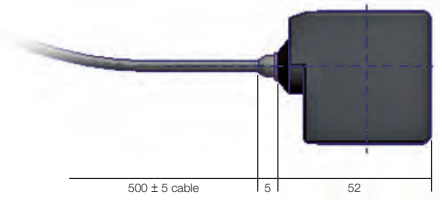

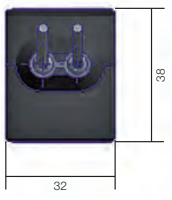

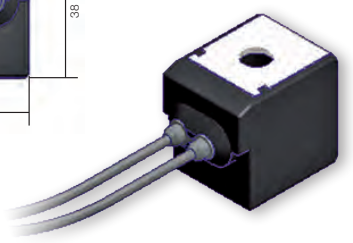

Tel: +45 63 12 83 00 | Email: ps@hymatik.com | www.hymatik.com | Hvidkaervej 27a, DK-5250 Odense SV, Denmark

COIL 32 mm IP67 UL

This coil can be mounted with every Parker solenoid valves corresponding to the specified Coil Group.
See column "Coil Group" within valve pages.

This is an encapsulated assembly comprising a coil, integral magnetic iron path and snap-on plug connection.

The synthetic material encapsulation provides an effective compact housing, offering full protection against dust, oil, water, etc.
Ease of mounting in confined space - offers shock and corrosion protection - simplifies conversion of existing equipment to other requirements, etc.
Coils conform to the IEC/CENELEC safety standards and complies with European low-voltage directive.



Specification			UL Coil with two 500 mm flying leads			
Reference			496082			
Coil Group			2.0 / 2.2			
Degree of protection			**IP67** according to IEC / EN 60529 standards			
Class of insulation			F 155°C			
Ambient temperature			-40°C to +50°C The application is limited also by the temperature range of the valve.			
Elect. Power	DC	**Pn** (hot)	12 W			
		P (cold) 20°C	16 W			
	AC	**Pn** (holding)	13-14 W			
		Attraction cold	40 VA			
Weight			180 g			
Voltages "Un"			**VAC/Hz**	**Order Number**	**VDC**	**Order Number**
-10% to +10% of Un for AC - 5 % to + 10 % for Un DC			220/50 - 240/60	Q3	24 12	C1 C2

To Order a Coil: Use 6 digits ordering number **- Code Example:** 496082 for 24VDC= **496082C2**
More voltage possibilities can be found in the table of voltage codes at the end of the coil section.

Valves please order housing Ref: 2995

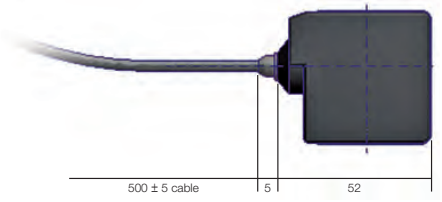

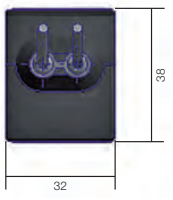

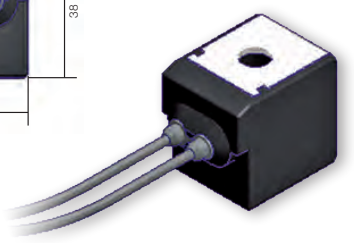

Tel: +45 63 12 83 00 | Email: ps@hymatik.com | www.hymatik.com | Hvidkaervej 27a, DK-5250 Odense SV, Denmark

COIL GROUP
2.0/2.1

COILS WITH SCREW TERMINALS

STANDARD COILS 40 mm

These coils can be mounted with every Parker Solenoid Valves corresponding to the specified Coil Group.
See column "Coil Group" within valve pages.

They can be mounted with all metal housings.

The coil winding is completely encapsulated in synthetic material.

Easy mounting in confined spaces. Electrical connection with screw terminals for wire up to 1.5 mm².

Coils conform to the IEC/CENELEC safety standards and complies with European low-voltage directive.



Specification			Standard				Double Frequency	
Reference			481000				483520	
Coil Group			2.0 / 2.1					
Class of insulation			F 155°C					
Ambient temperature			-40°C to +50°C The application is limited also by the temperature range of the valve..					
Elect. Power	DC	**Pn** (hot)	8W				-	
		P (cold) 20°C	9W				-	
	AC	**Pn** (holding)	8W				9W	
		Attraction cold	32 VA (9 W)				36 VA (10 W)	
Weight			130 g				130 g	
Voltages "Un"			VAC/Hz	Code	VDC	Code	VAC/Hz	Code
-10% to +10% of the Un (-15 % to +5 % for double-frequency coil with voltage code S6 if 240 V/50/Hz is used).			24/50 110/50-115/50 220/50-230/50	A2 A4 3D	24 48 110	C2 C4 C5	24/50-60 220-240/50-240/60	P0 S6

To Order a Coil choose Coil Ref + Voltage Code, example: **481000** for **24VDC** = **481000C2**
More voltage possibilities can be found in the table of voltage codes at the end of the coil section.

These coils must be used with suitable housings, see examples below:

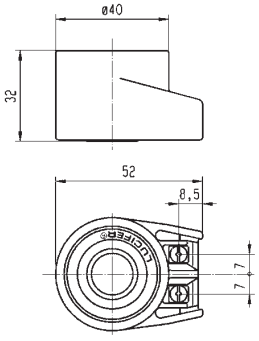



Ref. 4270 - Protectio **IP 44** according to IEC / EN 60529 standard (with cable gland)



Ref. 4538 - Protectio **IP 67** according to IEC / EN 60529 standard

HIGH POWER COILS 40 mm

This coil can be mounted with every Parker Solenoid Valves corresponding to the specified Coil Group.
See column "Coil Group" within valve pages.

They can be mounted with all metal housings.

The coil winding is completely encapsulated in synthetic material.

Easy mounting in confined spaces. Electrical connection with screw terminals for wire up to 1.5 mm².

Coils conform to the IEC/CENELEC safety standards and complies with European low-voltage directive.



Specification			High Power	
Reference			481044	
Coil Group			2.0 / 2.2	
Class of insulation			F 155°C	
Ambient temperature			-40°C to +50°C The application is limited also by the temperature range of the valve.	
Elect. Power	DC	Pn (hot)	-	
		P (cold) 20°C	-	
	AC	Pn (holding)	14 W	
		Attraction cold	56 VA (20 W)	
Weight			130 g	
Voltages "Un"			VAC/Hz	Code
-10% to +10% of the Un			24/50 110/50 220/50 230/50	A2 A5 A7 F4

To Order a Coil choose Coil Ref + Voltage Code, example: **481044** for **24VAC/50Hz** = **481044A2**
More voltage possibilities can be found in the table of voltage codes at the end of the coil section.

These coils must be used with suitable housings, see examples below:

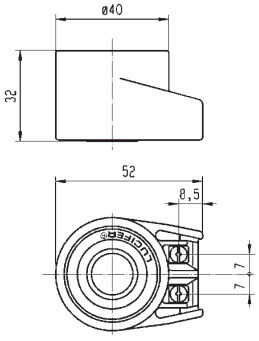



Ref. 4270 - Protectio **IP 44** according to IEC / EN 60529 standard (with cable gland)



Ref. 8520 - Protectio **IP 67** according to IEC / EN 60529 standard

Tel: +45 63 12 83 00 | Email: ps@hymatik.com | www.hymatik.com | Hvidkaervej 27a, DK-5250 Odense SV, Denmark

COIL GROUP
2.0/2.1
2.2

COILS WITH SCREW TERMINALS

HIGH TEMPERATURE COILS 40 mm

These coils can be mounted with every Parker Solenoid Valves corresponding to the specified Coil Group.
See column "Coil Group" within valve pages.

They can be mounted with all metal housings.

The coil winding is completely encapsulated in synthetic material.

Easy mounting in confined spaces. Electrical connection with screw terminals for wire up to 1.5 mm².

Coils conform to the IEC/CENELEC safety standards and complies with European low-voltage directive.



Specification			High Temperature				High Temperature & High Power			
Reference			485100				486265			
Coil Group			2.0 / 2.1				2.0 / 2.2			
Class of insulation			H 180°C							
Ambient temperature			-40°C to +50°C The application is limited also by the temperature range of the valve.							
Elect. Power	DC	Pn (hot)	8 W				14 W			
		P (cold) 20°C	9 W				21 W			
	AC	Pn (holding)	8 W				14 W			
		Attraction cold	32 VA (9 W)				56 VA (20 W)			
Weight			140 g							
Voltages "Un"			VAC/Hz	Code	VDC	Code	VAC/Hz	Code	VDC	Code
-10% to +10% of the Un			24/50 220/50-230/50	A2 3D	24	C2	24/50 110/50 220/50 230/50	A2 A5 A7 F4	24	C2

To Order a Coil choose Coil Ref + Voltage Code, example: **485100** for **24VAC/50Hz** = **485100A2**
More voltage possibilities can be found in the table of voltage codes at the end of the coil section.

These coils must be used with suitable housings, see examples below:

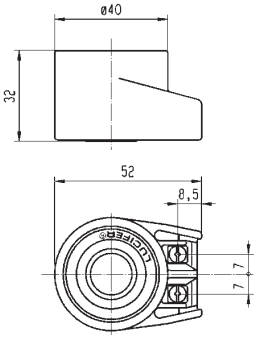



Ref. 4270 - Protectio **IP 44** according to IEC / EN 60529 standard (with cable gland)



Ref. 8520 - Protectio **IP 67** according to IEC / EN 60529 standard

BISTABLE COILS 40 mm FOR IMPULSE APPLICATIONS

These coils can be mounted with every Parker solenoid valves corresponding to the specified Coil Group.

See column "Coil Group" within valve pages.

These coils are specially designed for bistable (or impulse or magnetic latch) solenoid valves for Heating Applications.



Specification			Bistable (Impulse)	
Reference			484990	485400
Coil Group			4.0	
Class of insulation			F 155°C	
Ambient temperature			-40°C to +50°C The application is limited also by the temperature range of the valve.	
Length of impulses			Switch on (terminals A-B): minimum 50 ms Switch off (terminals A-C): minimum 35 ms	
Electr. Power consuption	DC	Attraction (hot)	-	13 W
		Attraction (cold)	-	19 W
		Release (hot)	-	8 W
		Release (cold)	-	10 W
	AC	Attraction (hot)	11 W	-
		Attraction (cold)	17 W	-
		Release (hot)	4 W	-
		Release (cold)	7 W	-
Weight			150 g	

Voltages "Un"	VAC/Hz	Code	VDC	Code
-10% to +10% of the Un	24/50-24/60	P0	24	C2
	48/50-48/60	S4	48	C4
	110-115/50-115/60	1P	110	C5
	220-230/50-60	3P		

To Order a Coil choose Coil Ref + Voltage Code, example: **485400** for **24VDC** = **485400C2**
More voltage possibilities can be found in the table of voltage codes at the end of the coil section.

These coils must be used with suitable housings, see examples below:

DIAGRAM

Alternating Current

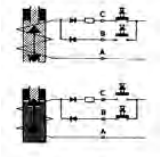

Direct Current

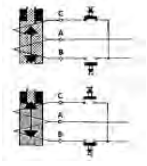

Only an electrical impulse given to terminals A-C reverses the magnetic field. This magnetic field demagnetises the reversible magnet enough to allow the return spring to bring the plunger back to its initial position and close the valve.



Ref. 4269 - Protection IP 44



Ref. 4538 - Protection IP 67

Tel: +45 63 12 83 00 | Email: ps@hymatik.com | www.hymatik.com | Hvidkaervej 27a, DK-5250 Odense SV, Denmark

TABLE OF CONTENT

INTRODUCTION

Index for Explosion Proof Electrical Parts 250

List of Coil Groups 251

COILS

Coils for DIN plug connection 254

Coils with flying leads 265

Coils with screw terminal 267

EXPLOSION PROOF ELECTRICAL PARTS

Level of protection "nc AC 272

Level of protection "db" 280

Level of protection "mb" 281

Level of protection "db mb" 286

Level of protection "eb" 291

Level of protection "eb mb" 292

Level of protection "ia" 295

HOUSINGS 302

COIL ACCESSORIES 306

COIL APPENDICES

Guidance chart for IS-Barriers 308

Table of voltage codes for coils and electrical parts 310

Tel: +45 63 12 83 00 | Email: ps@hymatik.com | www.hymatik.com | Hvidkaervej 27a, DK-5250 Odense SV, Denmark

ELECTRICAL PART LOW POWER 22 mm

This coil can be mounted with every Parker ATEX solenoid valves corresponding to the specified Coil Group.

See column "Coil Group" within valve pages.

Application:
Control of solenoid valves in dangerous areas where explosion-proof protection Ex nc AC IIC T5 is required.

Benefits:
The synthetic material encapsulation of the coil provides an effective compact housing, offering full protection against dust, oil, water, etc.
Small size for ease of mounting in confined spaces.



Reference			495865			
Certificate			LCIE 05 ATEX 6003 X			
Coil Group			1.1			
Type of protection		Gas	II 3 G - Ex nc AC IIC T5			
		Dust	II 3 D - Ex tc IIIC - T 95°C			
Degree of protection			**IP65** (with plug) according to IEC/EN 60529 Standards			
Ambiant temperature			-40°C to +50°C The application is limited also by the temperature range of the valve.			
Insulation Class			F 155°C			
Electrical connection			These coils with connection 2P + G - when mounted together with the supplied Pg 9 plug (delivered with the coil),			
Elect. Power	DC	**Pn** (hot)	2.5 W			
		P (cold) 20°C	3 W			
	AC	**Pn** (holding)	2 W			
		Attraction cold	5.7 VA (2.5 W)			
Weight			120 g			
Voltages "Un"			VAC/Hz	Code	VDC	Code
-10% to +10% of the Un			24/50 48/50 110/50-115/50 220/50-230/50	A2 A4 0A 3D	24 48 110	C2 C4 C5

To Order a Coil choose Coil Ref + Voltage Code, example: **495865** for **24VDC** = **495865C2**

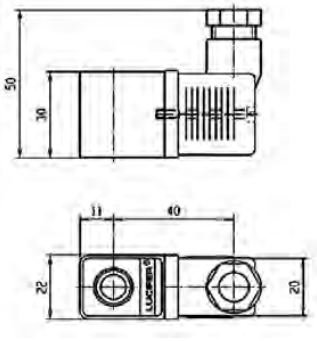

ELECTRICAL PART DOUBLE FREQUENCY 22 mm

This coil can be mounted with every Parker ATEX solenoid valves corresponding to the specified Coil Group.

See column "Coil Group" within valve pages.

Application:
Control of solenoid valves in dangerous areas where explosion-proof protection Ex nc AC IIC T5 is required.

Benefits:
The synthetic material encapsulation of the coil provides an effective compact housing, offering full protection against dust, oil, water, etc.
Small size for ease of mounting in confined spaces.



Specification			Double Frequency			
Reference			496637			
Certificate			ATEX			
Coil group			1.2			
Type of protection		Gas	II 3 G - Ex nc AC IIC T5			
		Dust	II 3 D - Ex tc IIIC - T 95°C			
Degree of protection			**IP65** (with plug) according to IEC/EN 60529 Sandards			
Ambiant temperature			-20°C to +50°C The application is limited also by the temperature range of the valve.			
Insulation Class			F 155°C			
Elect. Power	DC	**Pn** (hot)	3 W			
		P (cold) 20°C	-			
	AC	**Pn** (holding)	3 W			
		Attraction cold	5.7 VA (2.5 W)			
Weight			75 g			
Voltages "Un"			**VAC/Hz**	**Code**	**VDC**	**Code**
-10% to +10% of the Un			24/50-60 110/50-60 230/50-60 48/50-60	P0 P2 P9 S4	24 V 48 V 110 V	C2 C4 C5

To Order a Coil choose Coil Ref + Voltage Code, example: **496637** for **24VDC** = **496637C2**

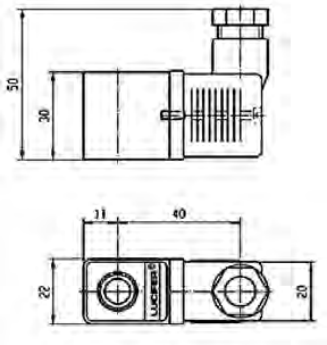

ELECTRICAL PART 32 mm

These coils can be mounted with every Parker ATEX solenoid valves corresponding to the specified Coil Group.
See column "Coil Group" within valve pages.

Application: Control of solenoid valves in dangerous areas where explosion-proof protection Ex nc AC IIC T3 to T4 is required.
Ease of mounting in confined space - offers shock and corrosion protection-simplifies conversion of existing equipment to other requirements, etc.

Benefits:
The synthetic material encapsulation of the coil provides an effective compact housing, offering full protection against dust, oil, water, etc.
Small size for ease of mounting in confined spaces.



Reference			495870		496110	
Certificate			LCIE 05 ATEX 6003 X			
Coil Group			2.0 / 2.1			
Type of protection		Gas	II 3 G - Ex nc AC IIC T3 / T4		II 3 G - Ex nc AC IIC T3 / T4	
		Dust	II 3 D - Ex tc IIIC - T195°C / T130°C		II 3 D - Ex tc IIIC - T195°C / T130°C	
Degree of protection			**IP65** (with plug) according to IEC/EN 60529 Standards			
Insulation Class			F (155°C)			
Duty cycle			100%			
Ambiant temperature			-40°C to +65°C / 50°C The application is limited also by the temperature range of the valve.			
Elect. Power	DC	**Pn** (hot)	9 W		-	
		P (cold) 20°C	12 W		-	
	AC	**Pn** (holding)	8 W		9 W	
		Attraction cold	26 VA (9 W)		32 VA (10 W)	
Weight			150 g			
Voltages "Un"			VAC/Hz	Code	VDC	Code
-10% to +10% of the Un			24/50 48/50 110/50 220-230/50	A2 A4 A5 3D	24 48 110	C2 C4 C5

Reference			496110	
Voltages "Un"			VAC/Hz	Code
-10% to +10% of the Un			24/50-60 48/50-60 110/50-60 220/50-60	P0 S4 S5 S6

To Order a Coil choose Coil Ref + Voltage Code495870 24VDC = 495870C2

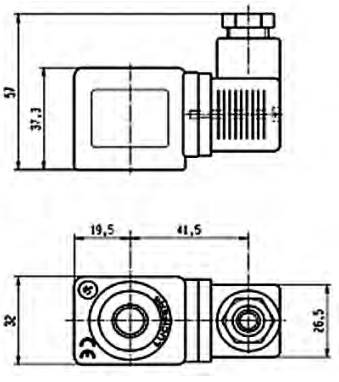

ELECTRICAL PART LOW POWER 32 mm

This coil can be mounted with every Parker ATEX solenoid valves corresponding to the specified Coil Group.
See column "Coil Group" within valve pages.

Application: Control of solenoid valves in dangerous areas where explosion-proof protection Ex nc AC IIC T5 to T6 is required.
Ease of mounting in confined space - offers shock and corrosion protection-simplifies conversion of existing equipment to other requirements, etc. **Benefits:**

The synthetic material encapsulation of the coil provides an effective compact housing, offering full protection against dust, oil, water, etc.
Small size for ease of mounting in confined spaces.



Reference			496125	
Certificate			LCIE 05 ATEX 6003 X	
Coil group			6.0	
Type of protection		Gas	II 3 G - Ex nc AC IIC T5 / T6	
		Dust	II 3 D - Ex tc IIIC - T80°C /T95°C	
Degree of protection			**IP65** (with plug) according to IEC/EN 60529 Standards	
Insulation Class			F (155°C)	
Duty cycle			100%	
Ambiant temperature			-40°C to +65°C / 50°C The application is limited also by the temperature range of the valve.	
Elect. Power	DC	**Pn** (hot)	1.6 W	
		P (cold) 20°C	2.1 W	
	AC	**Pn** (holding)	-	
		Attraction cold	-	
Weight			150 g	
Voltages "Un"			VDC	Code
-10% to +10% of the Un			24 48 110	C2 C4 C5

To Order a Coil choose Coil Ref + Voltage Code, example: **496125** for **24VDC** = **496125C2**

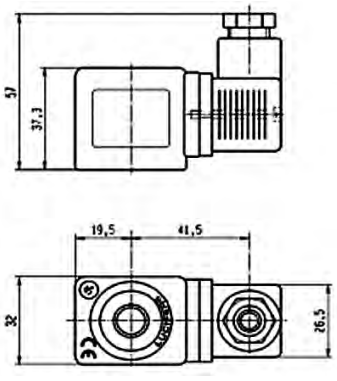

ZONE 2/22

ELECTRICAL PART 32 mm

This coil can be mounted with every Parker ATEX solenoid valves corresponding to the specified Coil Group.
See column "Coil Group" within valve pages.

Application: Control of solenoid valves in dangerous areas where explosion-proof protection Ex nc AC IIC T3 to T4 is required.
Ease of mounting in confined space - offers shock and corrosion protection-simplifies conversion of existing equipment to other requirements, etc.

Benefits:
The synthetic material encapsulation of the coil provides an effective compact housing, offering full protection against dust, oil, water, etc.
Small size for ease of mounting in confined spaces.



Specification			32 mm Coil "nc AC"			
Reference			495875			
Certificate			LCIE 05 ATEX 6003 X			
Coil Group			2.0 / 2.1			
Type of protection		Gas	II 3 G - Ex nc AC IIC T3 / T4			
		Dust	II 3 D - Ex tc IIIC - T195°C / T130°C			
Degree of protection			**IP65** (with plug) according to IEC/EN 60529 Standards			
Insulation Class			F 155°C			
Duty cycle			100%			
Ambiant temperature			-40°C to +65°C / 50°C The application is limited also by the temperature range of the valve.			
Elect. Power	DC	**Pn** (hot)	7 W			
		P (cold) 20°C	-			
	AC	**Pn** (holding)	6 W			
		Attraction cold	-			
Weight			180 g			
Voltages "Un"			VAC/Hz	Code	VDC	Code
-10% to +10% of the Un			220-230/50	3D	24	C2

To Order a Coil choose Coil Ref + Voltage Code, example: **495875** for **24VDC** = **495875C2**

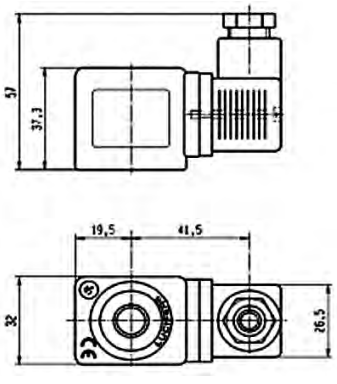

Tel: +45 63 12 83 00 | Email: ps@hymatik.com | www.hymatik.com | Hvidkaervej 27a, DK-5250 Odense SV, Denmark

ELECTRICAL PART 32 mm

This coil can be mounted with every Parker ATEX solenoid valves corresponding to the specified Coil Group.
See column "Coil Group" within valve pages.

Application: Control of solenoid valves in dangerous areas where explosion-proof protection Ex nc AC IIC T3 is required.
Ease of mounting in confined space - offers shock and corrosion protection - simplifies conversion of existing equipment to other requirements, etc.

Benefits:
The synthetic material encapsulation of the coil provides an effective compact housing, offering full protection against dust, oil, water, etc.
Small size for ease of mounting in confined spaces.



Specification			32 mm Coil "nc AC"			
Reference			495880			
Certificate			LCIE 05 ATEX 6003X			
Coil Group			2.0 / 2.2			
Type of protection		Gas	II 3 G - Ex nc AC IIC T3			
		Dust	II 3D - Ex tc IIIC - T195°C			
Degree of protection			**IP65** (with plug) according to IEC/EN 60529 Standards			
Insulation Class			H 180°C			
Duty cycle			100%			
Ambiant temperature			-40°C to +65°C The application is limited also by the temperature range of the valve.			
Elect. Power	DC	**Pn** (hot)	14 W			
		P (cold) 20°C	-			
	AC	**Pn** (holding)	14 W			
		Attraction cold	-			
Weight			180 g			
Voltages "Un"			VAC/Hz	Code	VDC	Code
-10% to +10% of the Un			24/50 110/50 230/50	A2 A5 F4	24	C2

To Order a Coil choose Coil Ref + Voltage Code, example: **495880** for **24VDC** = **495880C2**

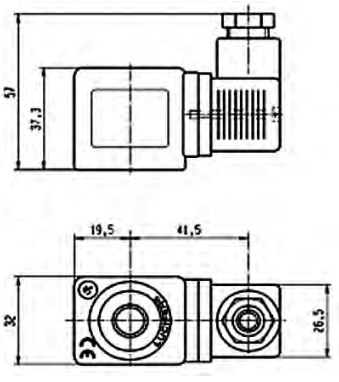

EXPLOSION PROOF ELECTRICAL PARTS

COIL GROUP 4.0

INCREASED SAFETY ELECTRICAL PARTS "nc AC"

ZONE 2/22

495915 - ELECTRICAL PARTS 50 mm

This coil can be mounted with every Parker ATEX solenoid valves corresponding to the specified Coil Group.
See column "Coil Group" within valve pages.

Application: Control of solenoid valves in dangerous areas where explosion-proof protection - Ex nc AC IIC T3 is required.

Benefits: Rotatable housing 360°, epoxy vernished steel with internal and external screw terminals for earth connection.

Small size for ease of mounting in confined space. Simplifies conversion of existing equipment to hazardous area requirements.



Reference			495915	
Certificate			LCIE 05 ATEX 6010 X	
Coil group			4.0	
Type of protection		Gas	II 3 G - Ex nc AC IIC T3	
		Dust	II 3 D - Ex tc IIIC - T 195°C	
Degree of protection			**IP67** according to IEC/EN 60529 Standards	
Ambient temperature			-40°C to +65°C The application is limited also by the temperature range of the valve.	
Insulation Class			F 155°C	
Electrical connection			By special cable gland M20 x 1.5 on screw terminals for wires up to 1.5 mm². Cable with outside diameter 6.5 mm to 13.5 mm can be simply sealed using the rubber gland with resilient sealing rings supplied	
Consomation Electrique	AC	Attraction (hot)	11 W	-
		Attraction (cold) 20°C	17 W	-
		Release (hot)	4 W	-
		Release (cold) 20°C	7 W	-
	DC	Attraction (hot)	-	13 W
		Attraction (cold) 20°C	-	19 W
		Release (hot)	-	8 W
		Release (cold) 20°C	-	10 W
Weight			320 g	
Duty cycle			Continuous duty solenoid (ED 100%)	

Voltages "Un"	VAC/Hz	Code	VDC	Code
-10% to +10% of the Un	110-115/50-60	1P	24	C2
	220-230/50-60	3P	48	C4
	48/50-60	S4		
	24/50-60	P0		

To Order a Coil choose Coil Ref + Voltage Code,
example: **495915** for **24VDC** = **495915C2**

Schema

AC

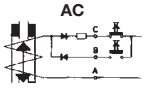

DC

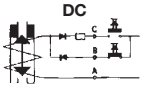

As soon as an electrical impulse is given to the terminals A-B, the electromagnetical force attracts the plunger and simultneously magnetizes a reversible permanent magnet ring. This magnet retains the plunger in place. It stays in position even without current. Only an electrical impulse given to terminals A-C reserves the magnetic field. This magnetic field demagnetises the reversible magnet enough to allow the return spring to bring the plunger back to its initial position and close the valve.

Switch: Switch on (terminals A-B): Minimum 50 ms (maximum 1 s)
AC: Switch off (terminals A-C): Minimum 35 ms (maximum 1 s)

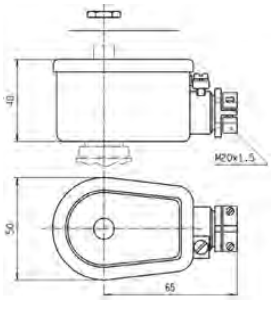

Parker Hannifin Corporation
Fluid Control Solutions Europe
Process Catalogue FCSE/1121/UK/V1.0

3.5.1 ELECTRICAL PARTS 496155

These coils can be mounted with every Parker solenoid valves corresponding to the specified Coil Group.
See column "Coil Compatibility Group" within valve pages.

Application: Control of solenoid valves in dangerous areas where explosion-proof protection Ex nAC IIC T3 is required.

Benefits: Rotatable housing 360°, epoxy vernished steel with internal and external screw terminals for earth connection.

Small size for ease of mounting in confined space.Simplifies conversion of existing equipment to hazardous area requirements.



Reference			496155			
Certificate			LCIE 05 ATEX 6010 X			
Coil Group			2.0/2.2			
Type of protection		Gas	II 3 G D - Ex nc AC IIC T3			
		Dust	II 3 G D - Ex tc IIIC - T 195 °C			
Degree of protection			**IP67** according to IEC/EN 60529 Standards			
Ambiant temperature			-40°C to +65°C The application is limited also by the temperature range of the valve.			
Insulation Class			F 155°C			
Electrical connection			By special cable gland or M20x1.5 on screw terminals for wires up to 1.5 mm². Cables with outside diameter 6.5 mm to 13.5 mm can be simply sealed using the rubber gland with resilient sealing rings supplied.			
Elect. Power	DC	**Pn** (hot)	14 W			
		P (cold) 20°C	21 W			
	AC	**Pn** (holding)	14 W			
		Attraction cold	56 VA (20 W)			
Weight			320 g			
Voltages "Un"			**VAC/Hz**	**Code**	**VDC**	**Code**
-10% to +10% of the Un			24/50 110/50 230/50	A2 A5 F4	24 48	C2 C4

To Order a Coil choose Coil Ref + Voltage Code, example: **496155** for **24VAC/50Hz** = **496155A2**

Fuses:

Both electrical parts have to be connected in series with a safety fuse according to IEC 60127-3.

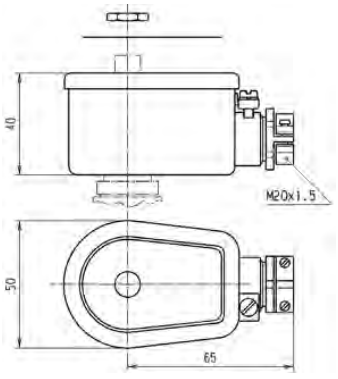

497105 & 497105.02 - ELECTRICAL PARTS

These coils can be mounted with every Parker ATEX solenoid valves corresponding to the specified Coil Group.
See column "Coil Group" within valve pages.

Application: Control of solenoid valves in dangerous areas where explosion-proof protection Ex db IIC T4 / T5 / T6 is required.

Benefits: Rotatable 360°, stainless steel with internal and external screw terminals for earth connection.

Small size for ease of mounting in confined space. Simplifies conversion of existing equipement to hazardous area requirements.



Reference			497105 (M20x1.5) 497105.02 (NPT 1/2")
Certificate			INERIS 12ATEX0041X - IECEx INE 12.0034X
Coil Group			10.3
Type of protection		Gas	II 2 G - Ex db IIC T4 / T5 / T6
		Dust	II 2 D - Ex tb IIIC - 130°C / 95°C / 80°C
Degree of protection			**IP66** (with relevant cable gland) according to IEC/EN 60529 Standards
Ambient temperature			-50°C to +80°C / +60°C / +40°C The operating temperature of the valve/coil can be limited by that of the valve
Insulation Class			F 155°C
Electrical connection			Electric connection is done in the connection chamber on an easily accessible connector terminals. The cable entry to the connection chamber is made through a 1/2" NPT or M20x1.5 thread in which an approved Exdb IIC cable gland must be installed.
Electrical consumption	DC	**Pn** (hot)	8 W
		P (cold) 20°C	9 W
	AC	**Pn** (holding)	8 W
		Attraction cold	9 W
Voltage Tolerance			+/- 10% of nominal voltage
Emergising Cuty			ED 100%

Voltages	VAC/Hz	Code	VDC	Code
	24/50-60	P0	12	C1
	110-115 / 50-60	1P	24	C2
	220-230 / 50-60	3P	48	C4
			110	C5

To Order a Coil choose Coil Ref + Voltage Code, example: **497105** for **24VDC** = **497105C2**

Coil delivered with an individual material traceability certificate (3.1 following EN10204)

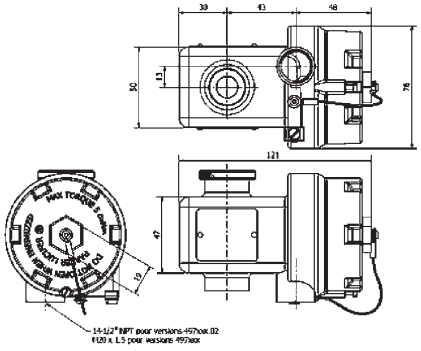

ELECTRICAL PART LOW POWER 22 mm

These coils can be mounted with every Parker ATEX solenoid valves corresponding to the specified Coil Group.
See column "Coil Group" within valve pages.

Application:
Control of solenoid valves in dangerous areas where explosion-proof protection Ex mb II T4 or T5 is required.

Benefits:
Coil and magnetic circuit encapsulated in synthetic material - offering shock and corrosion protection. AC coils with integrated thermal fuse. Small size for ease of mounting in confined spaces.



Reference			482605	482606 or 482606.160*
Certificate			LCIE 02 ATEX 6014 X - IECEx LCI 07.0026 X	
Coil Group			1.1	
Type of protection		Gas	II 2 G - Ex mb IIC T4 / T5	
		Dust	II 2 D - Ex tb IIIC - T130°C / 95°C	
Degree of protection			**IP65** (with plug) according to IEC/EN 60529 Standards	
Ambiant temperature			-40°C to +65°C / +40°C	-40°C to +65°C / +35°C
			The application is limited also by the temperature range of the valve.	
Insulation Class			F 155°C	
Electrical connection			Cable connection (3 x 0.75 mm²) encapsulated with coil, cable material according to application	
Elect. Power	DC	**Pn** (hot)	5 W	2.5 W
		P (cold) 20°C	6.5 W	3 W
	AC	**Pn** (holding)	4 W	2 W
		Attraction cold	8.9 VA (5 W)	5.7 VA (2.5 W)
Weight			150 g	

Voltages "Un"	VDC	Code	VAC/Hz	Code	VDC	Code
-10% to +10% of the Un	12 24	C1 C2	24/50 48/50 110/50-115/50 220/50-230/50	A2 A4 0A 3D	24 48 110	C2 C4 C5

To Order a Coil choose Coil Ref + Voltage Code, example: **482605** for **24VDC** = **482605C2**

* 482606.160 - 6 m cable length

Fuses:
Both electrical parts 482605 & 482606 have to be connected in series with a safety fuse according to CEI 60127-3. Indicating example bellow:

482605:

DC: 12 V, 1000 mA - 24 V, 500 mA - 48 V, 200 mA - 110 V, 100 mA
AC 50 HZ: 24 V, 500 mA - 48 V, 250 mA - 110/115 V, 100 mA - 220/230 V, 3 mA
AC 60 Hz: 24 V, 630 mA - 110/115 V, 125 mA - 220/230 V, 63 mA

482606:

DC: 12 V, 400 mA - 24 V, 200 mA - 48 V, 100 mA - 110 V, 50 mA
AC 50 HZ: 24 V, 250 mA - 48 V, 125 mA - 110/115 V, 63 mA - 220/230 V, 32 mA
AC 60 Hz: 24 V, 315 mA - 110/115 V, 63 mA - 220/230 V, 32 mA

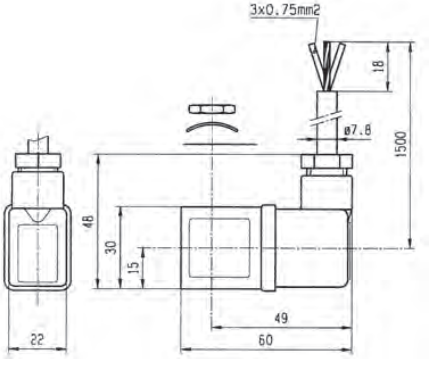

ELECTRICAL PART 32 mm

This coil can be mounted with every Parker ATEX solenoid valves corresponding to the specified Coil Group.
See column "Coil Group" within valve pages.

Application: Control of solenoid valves in dangerous areas where explosion-proof protection Ex mb II T4 is required.

Benefits: Coil and magnetic circuit encapsulated in synthetic material offering shock and corrosion protection. AC/DC coils with integrated thermal fuse. DC coils with integrated surge suppression diode.

Small size for ease of mounting in confined spaces. This electrical



Reference			492670			
Certificate			LCIE 02 ATEX 6015 X			
Coil Group			2.0 / 2.1			
Type of protection		Gas	II 2 G - Ex mb IIC T4			
		Dust	II 2 D - Ex tb IIIC - T130°C			
Degree of protection			**IP65** (With DIN Plug connector) according to IEC/EN 60529 standards			
Ambiant temperature			-40°C to +40°C The application is limited also by the temperature range of the valve.			
Class of insulation			F 155°C			
Electrical connection			Cable connection (3 x 1.5 mm²) encapsulated with coil, cable material according to application			
Elect. Power	DC	**Pn** (hot)	9 W			
		P (cold) 20°C	12 W			
	AC	**Pn** (holding)	8 W			
		Attraction cold	26 VA (9 W)			
Weight			320 g			
Voltages "Un"			**VAC/Hz**	**Code**	**VDC**	**Code**
-10% to +10% of the Un			48/50 230/50	A4 F4	24 48 110	C2 C4 C5

To Order a Coil choose Coil Ref + Voltage Code, example: **492670** for **24VDC** = **492670C2**

* 492670 3 m cable length
** 492670.160 - 6 m cable length

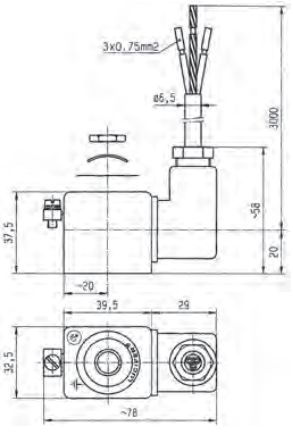

Special conditions:

The supply connection lines have to be fixed and positioned in such a way that they are protected against mechanical damages.

It is necessary to use a safety fuse with a nominal current corresponding to the coil current (max. 3 x nominal according to IEC 60127 and IEC 60269) against short-circuits.

Recommended values:

DC: 12 V, 1250 mA - 24 V, 630 mA - 48 V, 315 mA - 110 V, 125 mA
AC 50 HZ: 24 V, 1000 mA - 48 V, 500 mA - 110 V, 250 mA - 230 V, 100 mA
AC 60 Hz: 240 V, 100 mA

COIL GROUP
2.0/2.1

ENCAPSULATED ELECTRICAL PARTS "mb"

RoHS IECEx certified

WITH WATER PROOF METAL HOUSING 50 mm

These coils can be mounted with every Parker ATEX solenoid valves corresponding to the specified Coil Group.
See column "Coil Group" within valve pages.

Application: Control of solenoid valves in dangerous areas where explosion-proof protection Ex mb II T4 or T5 is required.

Benefits: Epoxy-vernished steel housing - solenoid coil, rectifier (silicium diodes), fuse and varistor protection element are completely encapsulated in the coil housing by means of epoxy resin.

Small size for ease of mounting in confined space. Simplifies conversion of existing equipment to hazardous area requirements.



Reference			**492070 (with 3m cable length)** **492070.160 (with 6m cable length)**			
Certificate			**LCIE 02 ATEX 6017 X - IECEx LCI 09.0024 X**			
Coil Group			**2.0 / 2.1**			
Type of protection		**Gas**	II 2 G - Ex mb IIC T4/ T5			
		Dust	II 2 D - Ex tb IIIC - T130 / 95°C			
Degree of protection			**IP67** according to IEC/EN 60529 standards			
Ambient temperature			-40°C to +65°C / 40°C The application is limited also by the temperature range of the valve.			
Insulation Class			F 155°C			
Electrical connection			Cable connection (3 x 1.5 mm²) with cable gland M20 x 1.5, external earth screw connection.			
Elect. Power	**DC**	**Pn** (hot)	8 W			
		P (cold) 20°C	10 W			
	AC	**Pn** (holding)	9 W			
		Attraction cold	11 W			
Weight			500 g			
Voltages "Un"			**VAC/Hz**	**Code**	**VDC**	**Code**
-10% to +10% of the Un			24/50-60	P0	24	C2
			110/50-60	P2	48	C4
			220/50-60	R5	110	C5
			230/50-60	P9		
			240/50-60	Q1		

To Order a Coil choose Coil Ref + Voltage Code, example: **492070** for **24VDC** = **492070C2**

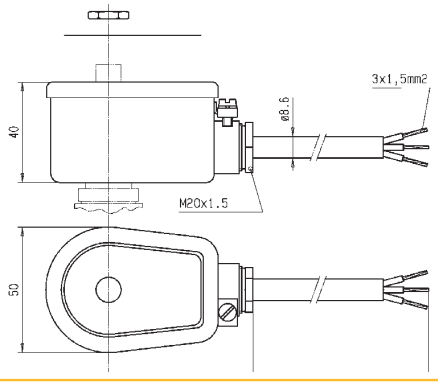

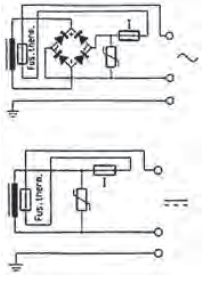

Parker Hannifin Corporation
Fluid Control Solutions Europe
Process Catalogue FCSE/1121/UK/V1.0

HZ10 COIL DOUBLE FREQUENCY

This coil can be mounted with every Parker ATEX solenoid valves corresponding to the specified Coil Group.
See column "Coil Group" within valve pages.

Application: Control of solenoid valves in dangerous areas where explosion-proof protection Ex mb II T4 or T5 is required.

The coil is delivered with a 3m cable.



Specification			Double Frequency			
Reference			HZ10			
Certificate			LCIE 02 ATEX 6020 X - IECEx LCI 08.0027 X			
Coil Group			2.0 / 2.1			
Type of protection		Gas	II 2 G - Ex mb IIC T3/T4/T5			
		Dust	II 2 D - Ex tb IIIC T195°C / 130°C / 95°C			
Degree of protection			**IP65** (with plug) according to IEC/EN 60529 Standards			
Ambient temperature			-40°C to +80°C / 65°C / 40°C The application is limited also by the temperature range of the valve.			
Insulation Class			H 180°C			
Duty cycle			100% continuous			
Electrical connection			Cable connection (3 x 1.5 mm²) with cable gland M20 x 1.5, external earth screw connection.			
Elect. Power	DC	**Pn** (hot)	8 W			
		P (cold) 20°C	-			
	AC	**Pn** (holding)	8 W			
		Attraction cold	-			
Weight			299 g			
Voltages "Un"			VAC/Hz	Code	VDC	Code
-10% to +10% of the Un			110/50-120/60 220/50-240/60	P3 Q3	12 24 120	C1 C2 C6

To Order a Coil choose Coil Ref + Voltage Code, example: **HZ10** for **24VDC** = **HZ10C2**

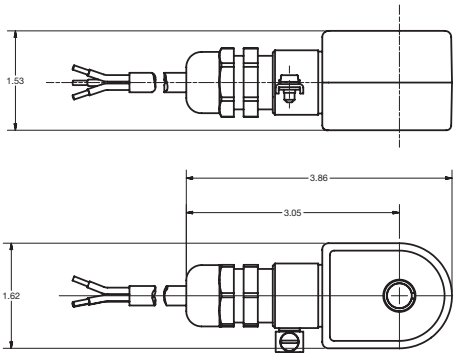

Dimensions in Inches.

COIL GROUP
2.0/2.2

ENCAPSULATED ELECTRICAL PARTS "mb"

RoHS CE Ex IECEx certified

HZ11 COIL DOUBLE FREQUENCY

This coil can be mounted with every Parker ATEX solenoid valves corresponding to the specified Coil Group.

See column "Coil Group" within valve pages.

Application: Control of solenoid valves in dangerous areas where explosion-proof protection Ex mb II T4 or T5 is required.

The coil is delivered with a 3m cable.



Specification			Double Frequency			
Reference			HZ11			
Certificate			LCIE 02 ATEX 6020 X - IECEx LCI 08.0027 X			
Coil Group			2.0 / 2.2			
Type of protection		Gas	II 2 G - Ex mb IIC T4/T5			
		Dust	II 2 D - Ex tb IIIC T130°C / 95°C			
Degree of protection			**IP65** (with plug) according to IEC/EN 60529 Standards			
Ambient temperature			-40°C to + 65°C / 40°C The application is limited also by the temperature range of the valve.			
Insulation Class			H 180 °C			
Duty cycle			100% continuous			
Elect. Power	DC	**Pn** (hot)	14 W			
		P (cold) 20°C	-			
	AC	**Pn** (holding)	14 W			
		Attraction cold	-			
Weight			299 g			
Voltages "Un"			VAC/Hz	Code	VDC	Code
-10% to +10% of the Un			110/50-120/60 220/50-240/60	P3 Q3	24	C2

To Order a Coil: **Coil Ref** + **Voltage Code**, example: **HZ11** for **24VDC** = **HZ11C2**

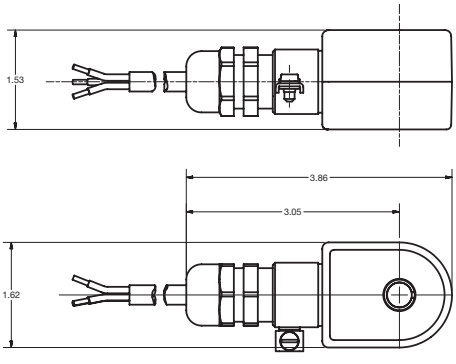

Dimensions in Inches.

Parker Hannifin Corporation
Fluid Control Solutions Europe
Process Catalogue FCSE/1121/UK/V1.0

495900 - LOW POWER ELECTRICAL PARTS 37 mm

This coil can be mounted with every Parker ATEX solenoid valves corresponding to the specified Coil Group.
See column "Coil Group" within valve pages.

Application: Control of solenoid valves in dangerous areas where explosion-proof protection Ex db mb IIC T4 to T6 is required.

Benefits: Rotatable 360° fibreglass-reinforced plastic housing (class H). Solenoid coil, rectifier (silicium diodes), fuses and varistor protection are completely encapsulated into the coil housing by epoxy resin for shock and corrosion protection.

The plastic housing is delivered with M20 x 1.5 cable gland certified for use "db" protection. Small size for ease of mounting in confined space.



Reference			495900 VAC		495900 VDC	
Certificate			LCIE 03 ATEX 6451 X - IECEx LCI 06.0004 X			
Coil Group			6.0			
Type of protection		Gas	II 2 G - Ex db mb IIC T4 / T5 / T6		II 2 G - Ex db mb IIC T4 / T5 / T6	
		Dust	II 2 D Ex tb IIIC - 130°C / 95°C / 80°C		II 2 D Ex tb IIIC - T130°C / 95°C / 80°C	
Degree of protection			**IP67** according to IEC/EN 60529 Standards			
Ambient temperature			-40°C to +80°C / 55°C / 40°C The application is limited also by the temperature range of the valve.		-40°C to +80°C / 65°C / 55°C	
Class of insulation			H (180 °)			
Electrical connection			Electric connection is done in the connection box on an easily accessible connector terminals. The introduction of the cable (Ø min 5 mm, Ømax. 11 mm, section max. 2.5 mm²) in the connection box passes by the built in M20 x 1.5 cable gland			
Elect. Power	DC	**Pn** (hot)	-		2 W	
		P (cold) 20°C	-		2.5 W	
	AC	**Pn** (holding)	2.5 W		-	
		Attraction cold	3 W		-	
Voltages "Un"			**VAC/Hz**	**Code**	**VDC**	**Code**
-10% to +10% of Un for AC - 10 % to + 10 % for Un DC.			24/50 48/50 115/50 230/50	A2 A4 E5 F4	24 48 110	C2 C4 C5

To Order a Coil: Coil Ref + Voltage Code495900 24VDC = **495900C2**

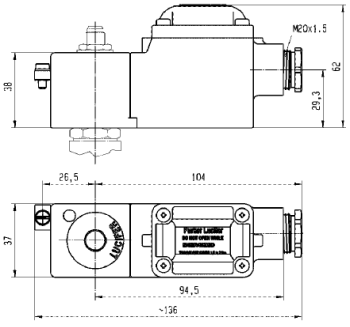

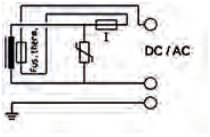

495905 - ELECTRICAL PARTS 37 mm

These coils can be mounted with every Parker ATEX solenoid valves corresponding to the specified Coil Group.
See column "Coil Group" within valve pages.

Application: Control of solenoid valves in dangerous areas where explosion-proof protection Ex db mb IIC T4 is required.

Benefits: Rotatable 360° fibreglass-reinforced plastic housing (class H). Solenoid coil, rectifier (silicium diodes), fuses and varistor protection are completely encapsulated into the coil housing by epoxy resin for shock and corrosion protection.

The plastic housing is delivered with M20 x 1.5 cable gland certified for use "db" protection. Small size for ease of mounting in confined space.



Reference			495905	495905.05
Certificate			LCIE 03 ATEX 6451 X - IECEx LCI 06.0004 X	
Coil Group			2.0 / 2.1	
Type of protection		Gas	II 2 G - Ex db mb IIC T4	
		Dust	II 2 D - Ex tb IIIC - 130°C	
Degree of protection			**IP67** according to IEC/EN 60529 Standards	
Ambient temperature			-40°C to +80°C The application is limited also by the temperature range of the valve.	
Class of insulation			H (180 °)	
Electrical connection			Electric connection is done in the connection box on an easily accessible connector terminals. The introduction of the cable (Ø min 5 mm, Ømax. 11 mm, section max. 2.5 mm²) in the connection box passes by the built in M20 x 1.5 cable gland.	
Elect. Power	DC	**Pn** (hot)	8 W	
		P (cold) 20°C	9 W	
	AC	**Pn** (holding)	8 W	
		Attraction cold	9 W	

Voltages "Un"	VAC/Hz	Code	VDC	Code
-10% to +10% of Un for AC - 10 % to + 10 % for Un DC.	24/50	A2	24	C2
	48/50	A4	48	C4
	115/50	E5	110	C5
	230/50	F4		

To Order a Coil choose Coil Ref + Voltage Code, example: **495905** for **24VDC** = **495905C2**

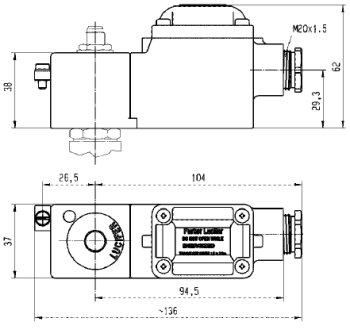

495905

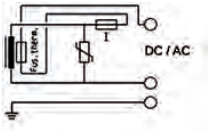

***495905.05**

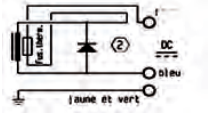

COIL GROUP
10.2/10.1

FLAME PROOF ENCAPSULATED ELECTRICAL PARTS "db mb"

RoHS IECEx certified

ZONE 1/21

496555 & 496560 - ELECTRICAL PARTS 37 mm

These coils can be mounted with every Parker ATEX solenoid valves corresponding to the specified Coil Group.
See column "Coil Group" within valve pages.

Application: Control of solenoid valves in dangerous areas where explosion-proof protection Ex db mb IIC T4 to T6 is required.

Benefits: Rotatable 360° fibreglass-reinforced plastic housing (class H). Solenoid coil, rectifier (silicium diodes), fuses and varistor protection are completely encapsulated into the coil housing by epoxy resin for shock and corrosion protection.

The plastic housing is delivered with M20 x 1.5 cable gland certified for use "db" protection. Small size for ease of mounting in confined space.



Reference			496555		496560	
Certificate			LCIE 07 ATEX 6075 X - IECEx LCI 07.0014X			
Coil Group			10.2		10.1	
Type of protection		Gas	II 2 G - Ex db mb IIC T4 / T5 / T6		II 2 G - Ex db mb IIC T4	
		Dust	II 2 D - Ex tb IIIC - T130°C / 95°C / 80°C		II 2 D - Ex tb IIIC - T130°C	
Degree of protection			**IP 67** according to IEC/EN 60529 Standards			
Ambiant temperature			-40°C to +65 / 50 / 35°C The application is limited also by the temperature range of the valve.		-40°C to +65°C	
Class of insulation			H (180 °)			
Electrical connection			Electric connection is done in the connection box on an easily accessible connector terminals. The introduction of the cable (Ø min 5 mm, Ømax. 11 mm, section max. 2.5 mm²) in the connection box passes by the built in M20 x 1.5 cable gland.			
Elect. Power	DC	**Pn** (hot)	-	6 W	-	8 W
		P (cold) 20°C	-	7.5 W	-	10.5 W
	AC	**Pn** (holding)	6 W	-	8 W	-
		Attraction cold	7.5 W	-	10.5 W	-

Voltages "Un"	VAC/Hz	Code	VDC	Code	VAC/Hz	Code	VDC	Code
-10% to +10% of the Un	230/50-60	P9	24	C2	230/50-60	P9	24	C2
	110/50-60	P2	48	C4	110/50-60	P2	48	C4
	24/50-60	P0	110	C5	24/50-60	P0	110	C5
	48/50-60	S4			48/50-60	S4		

To Order a Coil choose Coil Ref + Voltage Code, example: **496555** for **24VDC** = **496555C2**

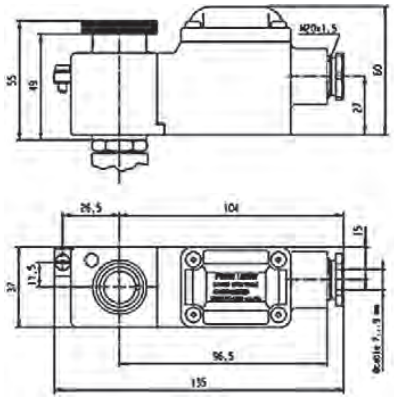

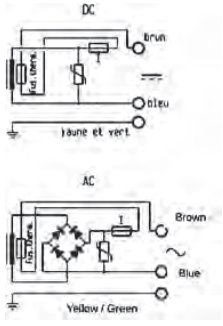

Parker Hannifin Corporation
Fluid Control Solutions Europe
Process Catalogue FCSE/1121/UK/V1.0

496700 & 496800 - ELECTRICAL PARTS 37 mm

These coils can be mounted with every Parker ATEX solenoid valves corresponding to the specified Coil Group.
See column "Coil Group" within valve pages.

Application: Control of solenoid valves in dangerous areas where explosion-proof protection Ex db mb IIC T4 to T6 is required.

Benefits: Rotatable 360° fibreglass-reinforced plastic housing (class H). Solenoid coil, rectifier (silicium diodes), fuses and varistor protection are completely encapsulated into the coil housing by epoxy resin for shock and corrosion protection.

The plastic housing is delivered with 1/2" NPT or M20 x 1.5 threaded hole for wide range of cable glands. Small size for ease of mounting in confined space.



Reference			496700 or 496700.02 (NPT)		496800 or 496800.02 (NPT)	
Certificate			LCIE 10 ATEX 3059 X - IECEx LCI 10.0023X			
Coil Group			10.2		10.1	
Type of protection		Gas	II 2 G - Ex db mb IIC T4 / T5 / T6		II 2 G - Ex db mb IIC T4	
		Dust	II 2 D - Ex tb IIIC - T130 / 95 / 80°C		II 2 D - Ex tb IIIC - T130°C	
Degree of protection			**IP67** according to IEC/EN 60529 Standards			
Ambiant temperature			-40°C to +35°C / +50°C / +65°C The application is limited also by the temperature range of the valve.		-40°C to +65°C	
Class of insulation			H (180°)			
Electrical connection			Electric connection is done in the connection box passes through a 1/2 NPT or M20x1.5 thread in which a certified Ex dBIIC cable gland must be installed			
Elect. Power	DC	**Pn** (hot)	-	6 W	-	8 W
		P (cold) 20°C	-	7.5 W	-	10.5 W
	AC	**Pn** (holding)	6 W	-	8 W	-
		Attraction cold	7.5 W	-	10.5 W	-

Voltages "Un"	VAC/Hz	Code	VDC	Code	VAC/Hz	Code	VDC	Code
-10% to +10% of the Un	230/50-60	P9	24	C2	230/50-60	P9	24	C2
	110/50-60	P2	48	C4	110/50-60	P2	48	C4
	24/50-60	P0	110	C5	24/50-60	P0	110	C5
	48/50-60	S4			48/50-60	S4		

To Order a Coil choose Coil Ref + Voltage Code, example: **496700** for **24VDC** = **496700C2**

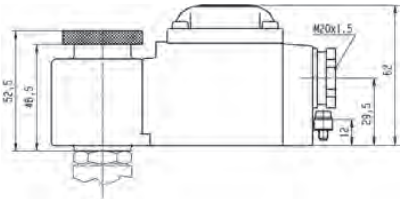

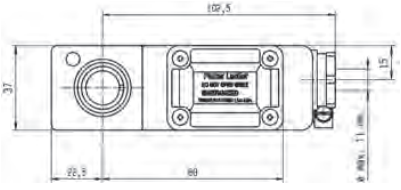

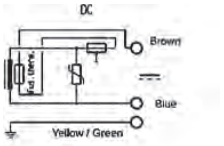

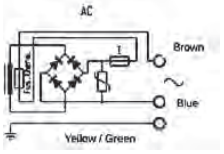

COIL GROUP

2.0/2.1

FLAME PROOF ENCAPSULATED ELECTRICAL PART "db mb"

ZONE 1/21

493640 OR HZ09 - ELECTRICAL PARTS

This coil can be mounted with every Parker ATEX solenoid valves corresponding to the specified Coil Group.
See column "Coil Group" within valve pages.

Application: Control of solenoid valves in dangerous areas where explosion-proof protection Ex db mb II 2 G/D T4 to T5 is required.

Benefits: Metal armature encapsulated in synthetic material provides high shock and corrosion protection.

Small size for ease of mounting in confined space.



Reference			493640 493640.60*			
Certificate			LCIE 02 ATEX 6009 X			
Coil Group			2.0 / 2.1			
Type of protection		Gas	II 2 G - Ex db mb T4/T5			
		Dust	II 2 D - Ex tb IIIC - T130°C / T95°C			
Degree of protection			IP65 according to IEC/EN 60529 Standards			
Ambiant temperature			- 40°C to +100°C / +75°C The application is limited also by the temperature range of the valve.			
Class of insulation			F (155 °)			
Electrical connection			Special "Ex db" cable gland, galvanized steel, with EPDM sealing. (EPR) cable, outside diameter 7.3 ± 0.5 mm and 3000 mm long.			
Elect. Power	DC	Pn (hot)	8 W			
		P (cold) 20°C	9 W			
	AC	Pn (holding)	8 W			
		Attraction cold	32 VA (9 W)			
Weight			500 g			
Voltages "Un"			VAC/Hz	Code	VDC	Code
- 15% to +10% of the Un			110-120/50-60 220-240/50-60	P3 Q3	24 120	C2 C6

To Order a Coil choose Coil Ref + Voltage Code, example: **493640** for **24VDC** = **493640C2**

* 493640.60 - 6 m cable length

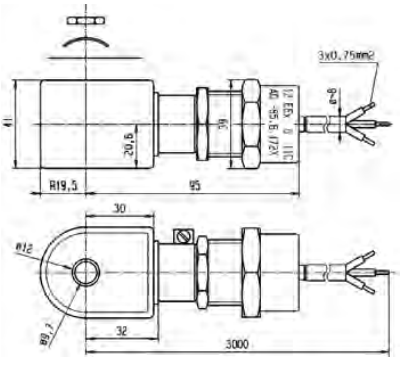

Fuses

This electrical part is equipped with a standard thermal cut-off fuse on all models and voltages

This electrical part must be connected in series with a safety fuse according to IEC 60127-3.

DC: 24V, 400 mA

AC: 110/50-120/60, 200 mA
220/50-240/60, 100 mA
230/50, 95 mA

COIL GROUP
2.0/2.1

INCREASED SAFETY ELECTRICAL PARTS "eb"

483371 & 494040 - ELECTRICAL PARTS 50 mm

This coil can be mounted with every Parker ATEX solenoid valves corresponding to the specified Coil Group.
See column "Coil Group" within valve pages.

Application: Control of solenoid valves in dangerous areas where explosion-proof protection Ex eb IIC T3 orT4 is required.

Benefits: Rotatable housing 360°, epoxy vernished steel with internal and external screw terminals for earth connection.

Small size for ease of mounting in confined space.Simplifies conversion of existing equipment to hazardous area requirements.



Reference			483371	494040
Certificate			LCIE 02 ATEX 6011 X	LCIE 02 ATEX 6013 X
Coil Group			2.0 / 2.1	
Type of protection		Gas	II 2 G - Ex eb IIC T4	II 2 G - Ex eb IIC T3 / T4
		Dust	II 2 D - Ex tb IIIC - T130°C	II 2 D - Ex tb IIIC - T195°C / T130 °C
Degree of protection			**IP67** according to IEC/EN 60529 Standards	
Ambiant temperature			-40°C to +65°C The application is limited also by the temperature range of the valve.	-40°C to +90°C / to +65°C
Class of insulation			F 155°C	F (180°)
Electrical connection			By special cable gland or M20 x 1.5 "Ex eb" on screw terminals for wires up to 1.5 mm². Cables with outside diameter 6.5 mm to 13.5 mm can be simply sealed using the ru bber gland with resilient sealing rings supplied.	
Elect. Power	DC	**Pn** (hot)	8 W	8 W
		P (cold) 20°C	9 W	9 W
	AC	**Pn** (holding)	8 W	8 W
		Attraction cold	32 VA (9 W)	32 VA (9 W)
Weight			320 g	

Voltages "Un"	VAC/Hz	Code	VDC	Code	VAC/Hz	Code	VDC	Code
-10% to +10% of the Un	24/50 48/50 110-115/50	A2 A4 0A 3D	24 48 110	C2 C4 C5	220-230/50	3D	24	C2

To Order a Coil choose Coil Ref + Voltage Code, example: **483371** for **24VDC** = **483371C2**

Fuses:
Both electrical parts have to be connected in series
with a safety fuse according to IEC 60127-3.

483371:
DC: 24 V, 400 mA - 48V, 250 mA - 110 V, 100 mA
AC 50HZ: 24 V, 630 mA - 48V, 315 mA - 110 V, 160 mA - 220/230 V, 80 mA

494040:
DC: 12 V, 400 mA - 24V, 200 mA - 48 V, 100 mA - 110V, 50 mA
AC 50HZ: 24 V, 250 mA - 48V, 125 mA - 110/115 V, 63 mA - 220/230 V, 32 mA

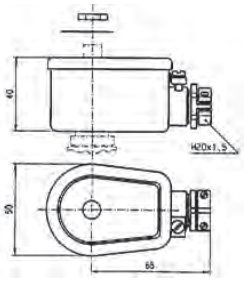

492310 - ELECTRICAL PARTS 50 mm

This coil can be mounted with every Parker ATEX solenoid valves corresponding to the specified Coil Group.
See column "Coil Group" within valve pages.

Application: Control of solenoid valves in dangerous areas where explosion-proof protection Ex eb mb II T4 to T5 is required.

Benefits: Rotatable 360° fibreglass-reinforced plastic housing. Solenoid coil, rectifier (silicium diodes), fuses and varistor protection are completely encapsulated into the coil housing by epoxy resin for shock and corrosion protection.

Small size for ease of mounting in confined space.



Reference			492310			
Certificate			LCIE 02 ATEX 6023 X - IECEx LCI 06.0011 X			
Coil group			10.1			
Type of protection		Gas	II 2 G - Ex eb mb II T4 / T5			
		Dust	II 2 D - Ex tb IIIC - T130°C / T95°C			
Degree of protection			IP66 according to IEC/EN 60529 Standards			
Ambiant temperature			-40°C to +75°C / to +40°C The operating temperature of the valve/coil can be limited by that of the valve			
Class of insulation			F 155°C			
Electrical connection			Connection box with terminals and cable entry via gland M20 x 1.5 - Possibility for additional earth via external screw.			
Elect. Power	DC	Pn (hot)	6 W			
		P (cold) 20°C	7.5 W			
	AC	Pn (holding)	6 W			
		Attraction cold	7.5 W			
Weight			500 g			
Voltages "Un"			VAC/Hz	Code	VDC	Code
-10% to +10% of the Un			110/50-60 230/50-60	P2 P9	24 48	C2 C4

To Order a Coil choose Coil Ref + Voltage Code, example: **492310** for **24VDC** = **492310C2**

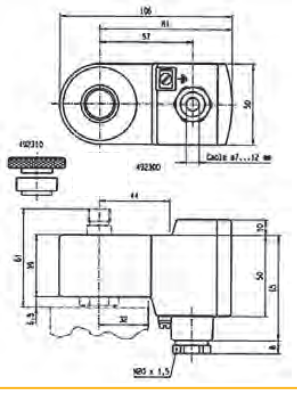

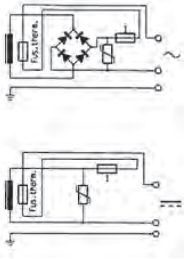

492210 - ELECTRICAL PARTS "BOOSTER" 50 mm

These coils can be mounted with every Parker ATEX solenoid valves corresponding to the specified Coil Group.
See column "Coil Group" within valve pages.

Application: Control of solenoid valves in dangerous areas where explosion-proof protection - Ex eb mb IIC T5/T6 is required.

Benefits: Rotatable 360° fibreglass-reinforced plastic housing. Solenoid coil, fuses and varistor protection are completely encapsulated into the coil housing by epoxy resin for shock and corrosion protection.Small size for ease of mounting in confined space. Simplifies conversion of existing equipment to hazardous area requirements.

Available only in 24VDC (suffix code : C2)



Reference		492210
Certificate		LCIE 02 ATEX 6023 X - IECEx LCI 06.0011 X
Coil group		9.0
Type of protection	Gas	II 2 G - Ex eb mb IIC T5 / T6
	Dust	II 2 D - Ex tb IIIC - T95°C / T80°C
Degree of protection		IP66 according to IEC/EN 60529 Standards
Ambient temperature		-40°C to +75°C / +40°C The operating temperature of the valve/coil can be limited by that of the valve
Insulation Class		F 155°C
Electrical connection		Connection box with terminals and cable entry via gland M20 x 1.5 Possibility for additional earth via external screw
Power consumption DC		1 to 1.8 W according to length of cable
Attraction current		I min = 60 mA (I nominal = 75 mA)
Voltage DC		U nominal = 24 VDC (C2), Umin = 21.6 VDC
Resistance		23 Ω + (R = 270 Ω)
Inductance		0 mH
Capacitance		0 µF
Response time		2 - 4 s
Weight		500 g

To Order a Coil choose Coil Ref + Voltage Code, example: **492210** for **24VDC** = **492210C2**

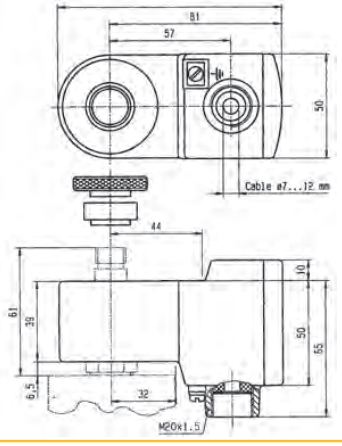

Indications:

Booster for Offshore valves

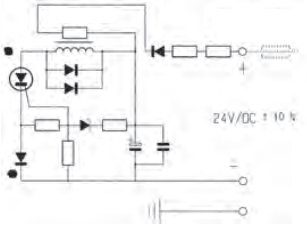

These electrical parts need an external fuse of I = 100 mA

492190 - ELECTRICAL PARTS 50 mm

This coil can be mounted with every Parker ATEX solenoid valves corresponding to the specified Coil Group.
See column "Coil Group" within valve pages.

Application: Control of solenoid valves in dangerous areas where explosion-proof protection Ex eb mb IIC T3 to T4 is required.

Benefits: Rotatable 360°, fiberglass -reinforced plastic housing. Solenoid coil, rectifier (silicium diodes), fuses and varistor protection are completely encapsulated into the coil housing by epoxy resin for shock and corrosion protection.

Small size for ease of mounting in confined space.



Reference			492190			
Certificate			LCIE 02 ATEX 6023 X - IECEx LCI 06.0011 X			
Coil Group			2.0 / 2.1			
Type of protection		Gas	II 2 G - Ex eb mb IIC T3 / T4			
		Dust	II 2 D - Ex tb IIIC - 195°C / 130°C			
Degree of protection			**IP66** according to IEC/EN 60529 Standards			
Ambient temperature			-40°C to +75°C / +40°C The operating temperature of the valve/coil can be limited by that of the valve			
Insulation Class			F 155°C			
Electrical connection			Connection box with terminals and cable entry via gland M20 x 1.5 Possibility for additional earth via external screw			
Electrical consumption	DC	**Pn** (hot)	9 W			
		P (cold) 20°C	11 W			
	AC	**Pn** (holding)	11 W			
		Attraction cold	13 W			
Weight			320 g			
Voltages "Un"			**VAC/Hz**	**Code**	**VDC**	**Code**
-10% to +10% of the Un			24/50-60	P0	24	C2
			110/50-60	P2	48	C4
			230/50-60	P9	110	C5
			240/50-60	Q1	220	C7

To Order a Coil choose Coil Ref + Voltage Code, example: **492190** for **24VDC** = **492190C2**

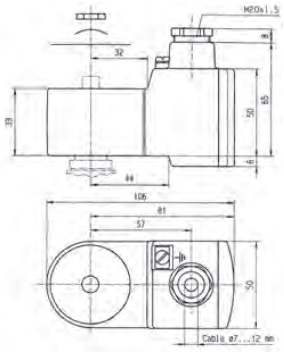

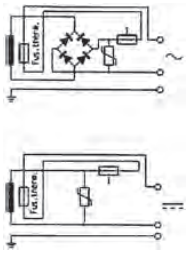

483580 - 483960 ELECTRICAL PARTS 32 mm "IS"

These coils can be mounted with every Parker ATEX solenoid valves corresponding to the specified Coil Group.
See column "Coil Group" within valve pages.

Application: Control of solenoid valves in dangerous areas where explosion-proof protection Ex ia or ib IIC T6 is required.

Benefits: Fully encapsulated assembly comprising a coil, metal armature, three diodes circuit and DIN plug connection.

The encapsulation provides an effective compact housing offering full protection against dust, oil, water, etc.

Small size for ease of mounting in confined space. Available only in 28VDC (suffix code : N7)



Reference (without plug) (with plug)			483580.01 483960.01
Certificate			LCIE 02 ATEX 6065 X - IECEx LCI 07.0025 X
Coil Group			7.0
Type of protection		Gas	II 1 G - Ex ia IIC - T6
		Dust	II 1 D - Ex ta IIIC - T80°C
Degree of protection			**IP65** with plug according to IEC/EN 60529 Standards
Ambiant temperature			- 40°C à + 55°C The operating temperature of the valve/coil can be limited by that of the valve.
Class of insulation			F 155°C
Electrical connection			The coil is connected with a 2P + E plug according to EN 175301-803 type A Contact 1 is marked as the positive pole ⊕.
Maximum supply voltage			28 VDC (N7) - 110 mA The minimum operating voltage at maximum 60°C is 14 VDC.
Power	DC	Minimum	500 mW
		Maximum	3 W
			Depending on applied voltage, IS barrier type and resistance of connected cable
Coil resistance at 20°C Impedance Apparent inductance Apparent capacitance			340 Ω 340 Ω 0 mH 0 µF
Weight			160 g (with plug)

To Order a Coil choose Coil Ref + Voltage Code, example: **483580** for **28VDC** = **483580N7**

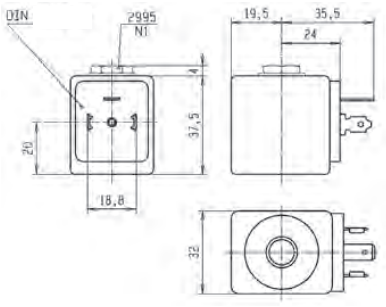

Important

The intrinsically safe supply circuit should have enough capacity in all environmental conditions to assure a **minimum operating current of 35 mA** through the coil.

The minimal holding current is 20 mA.

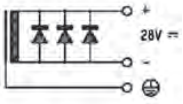

For the barrier compatibility see the corresponding table in in appendix section.

These coil must be used with suitable housing : **Ref. 2995**

495910 - MINIWATT - 0.3 W
ELECTRICAL PARTS "IS" "BOOSTER" 37 mm

These coils can be mounted with every Parker ATEX solenoid valves corresponding to the specified Coil Group.
See column "Coil Group" within valve pages.

Application: Control of solenoid valves in dangerous areas where explosion-proof protection Ex ia IIC T4 to T6 is required.

Benefits: Rotatable 360° fibreglass-reinforced plastic housing (class H). Solenoid coil, rectifier (silicium diodes), fuses and varistor protection are completely encapsulated into the coil housing by epoxy resin for shock and corrosion protection.

The plastic housing is delivered with M20 x 1.5 cable gland. Small size for ease of mounting in confined space. Available only in 28VDC (code : N7)



Reference			495910	495910.02 (Blue Cable Gland)
Certificate			LCIE 03 ATEX 6464 X - IECEx LCI 07.0006 X	
Coil Group			8.0	
Type of protection		Gas	II 1 G - Ex ia IIC - T4 / T5 / T6	
		Dust	II 1 D - Ex ta IIIC T80 / 95 / 130°C	
Degree of protection			**IP67** according to IEC/EN 60529 Standards	
Ambiant temperature			- 40°C to +80°C / 75°C / 65°C The application is limited also by the temperature range of the valve..	
Class of insulation			H 180°C	
Electrical connection			Electric connection is done in the connection box on an easily accessible connector terminals. The introduction of the cable (Ø min 7 mm, Ømax. 11 mm, section max. 2.5 mm²) in the connection box passes by the built in M20 x 1.5 cable gland	
Maximum supply voltage			28 VDC (N7) - 110 mA	28 VDC (N7) - 280 mA
Power	DC	Minimum	0.3 W (with 13 VDC)	0.3 W (with 13 VDC)
		Maximum	1.2 W (with 24 VDC)	2.58 W (with 24 VDC)
			Depending on applied voltage, IS barrier type and resistance of connected cable	
Line check			4 mA or 5 VDC max	
Coil resistance at 20°C Impedance Apparent inductance Apparent capacitance			Charge ~ 550 Ω - Holding ~ 500 Ω 0 mH 0 µF	
Response time			2 - 3 s	
Weight			500 g	

To Order a Coil choose Coil Ref + Voltage Code, example: **495910** for **28VDC** = **495910N7**

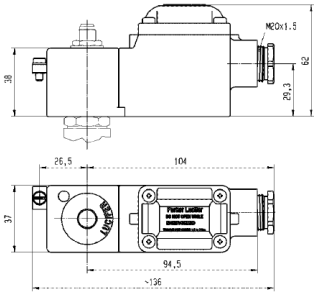

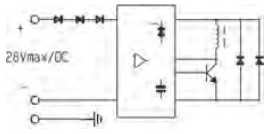

Tel: +45 63 12 83 00 | Email: ps@hymatik.com | www.hymatik.com | Hvidkaervej 27a, DK-5250 Odense SV, Denmark

496565 ELECTRICAL PARTS "BOOSTER" "IS" 37 mm

This coil can be mounted with every Parker ATEX solenoid valves corresponding to the specified Coil Group.
See column "Coil Group" within valve pages.

Application: Control of solenoid valves in dangerous areas where explosion-proof protection Ex ia IIC T4 to T6 is required.

Benefits: Rotatable 360° fibreglass-reinforced plastic housing (class H). Solenoid coil, rectifier (silicium diodes), fuses and varistor protection are completely encapsulated into the coil housing by epoxy resin for shock and corrosion protection.

The plastic housing is delivered with M20 x 1.5 cable gland. Small size for ease of mounting in confined space. Available only in 28VDC (code : N7)



Reference		496565	
Certificate		LCIE 08 ATEX 6071 X - IECEx LCI 08.0030 X	
Coil group		9.0	
Type of protection	Gas	II 1 G - Ex ia IIC - T4 / T5 / T6	
	Dust	II 1 D - Ex ta IIIC - T80 / T95 T130°C	
Degree of protection		**IP67** according to IEC/EN 60529 Standards	
Ambiant temperature		- 40°C to +80 / 75 / 65°C The application might also be limited by the temperature range of the valve.	
Electrical connection		Cable connection through a plastic cable gland M20 x 1.5 allowing use of cable diameter from 7 to 12 mm. Additional earth connection possible with external screw terminal.	
Class of insulation		H180°C	
Minimum Courant of function		20 mA	
Minimum voltage of function at 60°C		28 VDC (N7)	
Safety parameters Maximum acceptable values: Ui (V) / Ii (mA) / Pi (W)		28 V / 110 mA / 0.77 W 27 V / 120 mA / 0.81 W 26 V / 135 mA / 0.88 W 25 V / 150 mA / 0.94 W 24 V / 170 mA/ 1.02 W	28 V / 280 mA / 1.96 W 27 V / 320 mA / 2.16 W 26 V / 350 mA / 2.27 W 25 V / 390 mA / 2.43 W 24 V / 430 mA/ 2.58 W
Line check		4 mA or 5 VDC max	
Apparent Impedance Typ. Apparent Inductance Apparent Capacitance		Attraction ~ 600 Ω - Holding ~ 570 Ω 0 mH 0 µF	
Response Time Typ.		2 - 4 s	
Weight		500 g	

To Order a Coil choose Coil Ref + Voltage Code,
example: **496565** for **28VDC** = **496565N7**

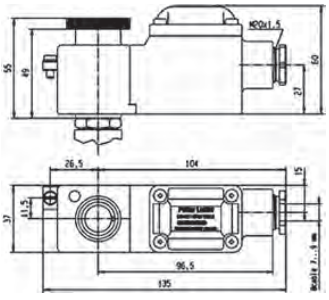

492965 ELECTRICAL PART "BOOSTER" "IS" 50 mm

This coil can be mounted with every Parker ATEX solenoid valves corresponding to the specified Coil Group.
See column "Coil Group" within valve pages.

Application: Control of solenoid valves in dangerous areas where explosion-proof protection Ex ia or ib IIC T6 is required.

Benefits: Rotatable 360° fibreglass-reinforced plastic housing. Solenoid coil, fuses and varistor protection are completely encapsulated into the coil housing by epoxy resin for shock and corrosion protection.Small size for ease of mounting in confined space. Simplifies conversion of existing equipment to hazardous area requirements.

Small size for ease of mounting in confined space. Available only in 28VDC.



Reference			492965.01 - (Stainless steel fixation) 492965.02 - (Plastic fixation)
Certificate			LCIE 02 ATEX 6066 X - IECEx LCI 07.0007 X
Coil Group			9.0
Type of protection		Gas	II 1 G - Ex ia IIC - T6
		Dust	II 1 D - Ex ta IIIC - T80°C
Degree of protection			**IP66** according to IEC/EN 60529 Standards
Ambiant temperature			- 40°C to +65°C The application is limited also by the temperature range of the valve.
Electrical connection			Cable connection through a plastic or stainless steel cable gland M20 x 1.5 allowing use of cable diameter from 10 to 12 mm. Additional earth connection possible with external screw terminal.
Class of insulation			H180°C
Maximum supply voltage			28 VDC (N7) - 110 mA
Power	DC	Minimum	0.3 W (with 13 VDC)
		Maximum	2.3 W (with 24 VDC)
			Depending on applied voltage, IS barrier type and resistance of connected cable
Line check			4 mA or 5 VDC max
Coil resistance at 20°C Impedance Apparent inductance Apparent capacitance			85 Ω 275 Ω (with 13 VDC) - 260 Ω (with 24 VDC) 0 mH 0 µF
Response time			2 - 4 s
Weight			500 g

To Order a Coil choose Coil Ref + Voltage Code, example: **492965.01** for **28VDC** = **492965.01N7**

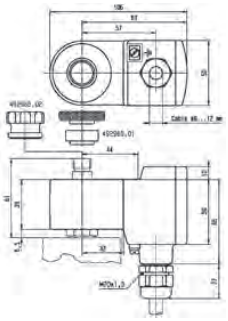

Important

The intrinsically safe supply circuit should have enough capacity in all environmental conditions to assure a **minimum operating current of 29 mA** through the coil.

The minimal holding current is 20 mA.

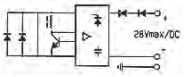

For the barrier compatibility see the corresponding table in appendix section.

COIL GROUP
12.0

INTRINSICALLY SAFE ELECTRICAL PARTS "ia"

482870.01 & 492335 "NEMA" ELECTRICAL PARTS "IS" 50 mm



These coils can be mounted with every Parker ATEX solenoid valves corresponding to the specified Coil Group.
See column "Coil Group" within valve pages.

Application: Control of solenoid valves in dangerous areas where an explosion-proof protection Ex ia IIC or IIB T6 is required.

Benefits: Rotatable 360° housing, polyamid with fibreglass housing and cover. Coil, electronic circuits and other elements required for intrinsic safety are completely encapsulated in the housing with epoxy material for shock and corrosion protection.

Small size for ease of mounting in confined space.

Reference			482870.01
Certificate			LCIE 02 ATEX 6024 X
Coil Group			12.0
Type of protection		Gas	II 1 G - Ex ia IIC - T6
		Dust	II 1 D - Ex ta IIIC - T80°C
Degree of protection			**IP66** according to IEC/EN 60529 Standards
Ambiant temperature			- 40°C to +65°C The application is limited also by the temperature range of the valve.
Class of insulation			H180°C
Electrical connection			Cable connection through a stainless steel cable gland M20 x 1.5 allowing use of cable diameter from 10 to 12 mm. Additional earth connection possible with external screw terminal.
Maximum supply voltage			28 VDC (N7) - 110 mA
Power	DC	Minimum	300 mW
		Maximum	3 W
			Depending on applied voltage, IS barrier type and resistance of connected cable
Coil resistance at 20°C Impedance Apparent inductance Apparent capacitance			295 Ω 345 Ω 0 mH 0 µF
Weight			500 g

To Order a Coil choose Coil Ref + Voltage Code, example: **482870.01** for **28VDC** = **482870.01N7**

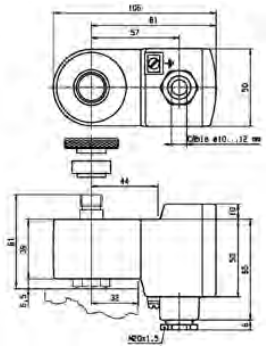

Important

The intrinsic safety supply circuit must have sufficient capacitance in all ambient conditions to guarantee a minimum operating current in excess of **29 mA** across the coil.

The minimum current for holding in the energised position is 20 mA

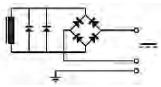

For the barrier compatibility see the corresponding table in appendix section.

Tel: +45 63 12 83 00 | Email: ps@hymatik.com | www.hymatik.com | Hvidkaervej 27a, DK-5250 Odense SV, Denmark

488650.01 & 490885 "NEMA" ELECTRICAL PARTS "IS" 50 mm



This coil can be mounted with every Parker ATEX solenoid valves corresponding to the specified Coil Group.
See column "Coil Group" within valve pages.

Application: Control of solenoid valves in dangerous areas where explosion-proof protection Ex ia or ib IIC T6 is required.

Benefits: Rotatable 360° housing, polyamid with fibreglass housing and cover. Coil, electronic circuits and other elements required for intrinsic safety are completely encapsulated in the housing with epoxy material for shock and corrosion protection.
Small size for ease of mounting in confined space.

Reference			488650.01
Certificate			LCIE 02 ATEX 6024 X
Coil Group			7.0
Type of protection		Gas	II 1 G - Ex ia IIC - T6
		Dust	II 1 D - Ex ta IIIC - T80°C
Degree of protection			**IP66** according to IEC/EN 60529 Standards
Ambiant temperature			- 40°C to +65°C The operating temperature of the valve/coil can be limited by that of the valve.
Electrical connection			Cable entry through a cable gland M20 x1.5. Screw terminals for leads 3 x 1.5 mm² max. Additional earth connection possible with external screw terminal
Class of insulation			H180°C
Maximum supply voltage			28 VDC (N7) - 110 mA The minimum operating voltage at maximum 60°C is 11.5 VDC.
Power	DC	Minimum	300 mW
		Maximum	3 W
			Dependent on the applied voltage, type of barrier IS and the resistance of the connected cable
Coil resistance at 20°C Impedance Apparent inductance Apparent capacitance			295 Ω 345 Ω 0 mH 0 µF
Weight			500 g

To Order a Coil choose Coil Ref + Voltage Code, example: **4488650.01** for **30VDC** = **488650.01L8**

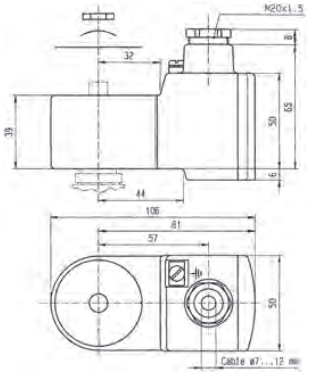

Important

The intrinsically safe supply circuit should have enough capacity in all environmental conditions to assure a **minimum operating current of 29 mA** through the coil.

The minimal holding current is 20 mA.

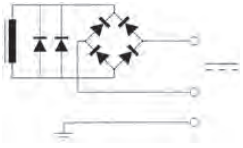

For the barrier compatibility see the corresponding table in appendix section.

TABLE OF CONTENT

INTRODUCTION

Index for Explosion Proof Electrical Parts 250

List of Coil Groups 251

COILS

Coils for DIN plug connection 254

Coils with flying leads 265

Coils with screw terminal 267

EXPLOSION PROOF ELECTRICAL PARTS

Level of protection "nc AC 272

Level of protection "db" 280

Level of protection "mb" 281

Level of protection "db mb" 286

Level of protection "eb" 291

Level of protection "eb mb" 292

Level of protection "ia" 295

HOUSINGS 302

COIL ACCESSORIES 306

COIL APPENDICES

Guidance chart for IS-Barriers 308

Table of voltage codes for coils and electrical parts 310

HOUSING

4270 COIL STANDARD HOUSING WITH SCREW TERMINALS

Standard housing:

Reference:	4270
Material:	Epoxy vernished steel with cataphoresis traitement
Degree of protection:	**IP** according to IEC/EN 60529 **IP 10** with armoured conduit **IP 44** with cable gland
Electrical connection:	Can be made with armoured conduit or cable gland M12x1.5. Parts No. 495740 (cable gland M12x1.5) and 484093 to be ordered separately. Grounding connection by screw M3 on the inside of housing base plate.
Weight:	120 g



Benefits:

This metal housing offers the ideal protection against shocks and corrosion- rotatable 360° - easy mounting in confined spaces - single-nut mounting - light weight - simplifies conversion of existing equipment to other requirements.

Application:

The majority of the valves can be fitted with this standard housing, and can be mounted with several compatible coils group.

Compatible coils:

- **481000 - Standard Coil**
  8 W Class F (155°C)
- **483520 - Double-Frequency Coil**
  9 W Class F (155°C)
- **481044 - Standard High-Power Coil**
  14 W Class F (155°C)
- **485100 - Standard High-Temperature Coil**
  8 W Class H (180°C)
- **486265 - High-Temperature and High-Power Coil**
  14 W Class H (180°C)

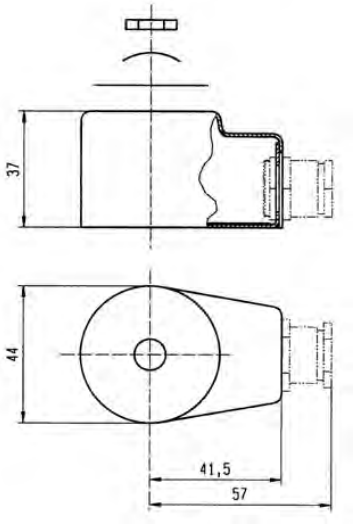

Parker Hannifin Corporation
Fluid Control Solutions Europe
Process Catalogue FCSE/1121/UK/V1.0

Tel: +45 63 12 83 00 | Email: ps@hymatik.com | www.hymatik.com | Hvidkaervej 27a, DK-5250 Odense SV, Denmark

HOUSING

4269 HOUSING FOR BISTABLE (IMPULSE) COILS

Housing for bistable coil:

Reference:	4269
Material:	Epoxy vernished steel
Degree of protection:	**IP** according to IEC/EN 60529 **IP 10** with armoured conduit **IP 44** with cable gland
Electrical connection:	Can be made with armoured conduit or cable gland M12x1.5. Parts No. 484092 and 484093 to be ordered separately. Grounding connection by screw M3 on the inside of housing base plate.
Weight:	120 g



Benefits:

This metal housing offers the ideal protection against shocks and corrosion- rotatable 360° - easy mounting in confined spaces - single-nut mounting - light weight - simplifies conversion of existing equipment to other requirements.

Application:

This housing is specially designed for group 706 coils and can be mounted only with valves controlled by electrical impulses.

Compatible coils:

- **484990 - Impulse coil for AC**
  11 W Class F (155°C)
- **485400 - Impulse coil for DC**
  13 W Class F (155°C)

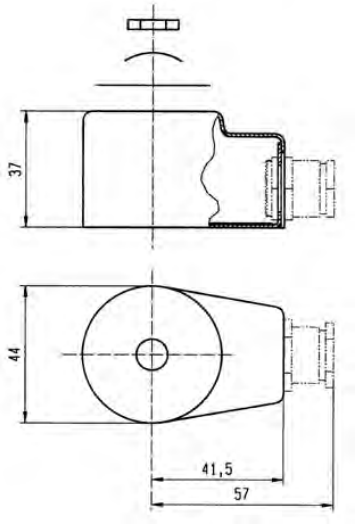

Tel: +45 63 12 83 00 | Email: ps@hymatik.com | www.hymatik.com | Hvidkaervej 27a, DK-5250 Odense SV, Denmark

HOUSING

4538 WATERPROOF AND DUSTPROOF HOUSING

Waterproof housing:

Reference:	4538
Material:	Epoxy vernished steel
Degree of protection:	**IP** according to IEC/EN 60529 **IP 67** with cable gland
Electrical connection:	Cable connection by cable gland M12x1.5 according to DIN 46320. Cable with outer diameter 6.5 - 13.5 mm can be simply sealed using a rubber gland with resilient sealing rings. The enclosure is internally and externally fitted with grounding and earthing screw terminals.
Weight:	180 g



Benefits:

This enclosure is dust- and waterproof. It corresponds to the degree of "International Protection" IP 67 according to IEC / EN 60529. Corrosion resistant, the metal housing offers good protection for the coil against shocks and other outside influences - rotatable 360° - easy mounting in confined spaces - easy access to the screw terminals - single-nut mounting - light weight - simple conversion of existing electrical equipment to other requirements without interruption of fluid passage in the valve.

Application:

This housing can be equipped with several coils of our programme, like the standard, double-frequency and magnetic latch coils.

Compatible coils:

- **481000 - Standard Coil**
  8 W Class F (155°C)
- **483520 - Double-Frequency Coil**
  9 W Class F (155°C)
- **484990 - Impulse Coil for AC**
  11 W Class F (155°C)
- **485400 - Impulse Coil for DC**
  13 W Class H (180°C)

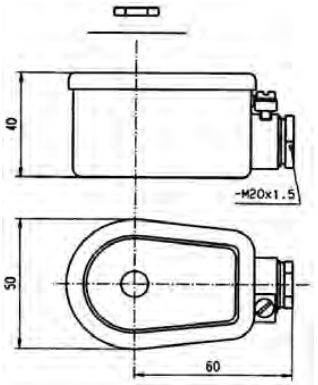

Parker Hannifin Corporation
Fluid Control Solutions Europe
Process Catalogue FCSE/1121/UK/V1.0

Tel: +45 63 12 83 00 | Email: ps@hymatik.com | www.hymatik.com | Hvidkaervej 27a, DK-5250 Odense SV, Denmark

HOUSING

8520 WATERPROOF HOUSING FOR HIGH-TEMPERATURE COILS

Waterproof housing:

Reference:	8520
Material:	Epoxy vernished steel
Degree of protection:	**IP** according to IEC/EN 60529 **IP 67** with cable gland
Electrical connection:	Cable connection by cable gland M12x1.5 according to European standards. Cable with outer diameter 6.5 - 13.5 mm can be simply sealed using a rubber gland with resilient sealing rings. The enclosure is internally and externally fitted with grounding and earthing screw terminals.
Weight:	180 g



Benefits:

This enclosure is dust- and waterproof. It corresponds to the degree of "International Protection" IP 67 according to IEC / EN 60529. Corrosion resistant, the metal housing offers good protection for the coil against shocks and other outside influences - rotatable 360° - easy mounting in confined spaces - easy access to the screw terminals - single-nut mounting - light weight - simple conversion of existing electrical equipment to other requirements without interruption of fluid passage in the valve.

Application:

The majority of the valves can be fitted with this housing and can be mounted with several compatible coils for high temperature (14 W, 8 W Class F or H).

Compatible coils:

- **481044 - High Power Coil**
  14 W Class F (155°C)
- **486265 - High Power Coil**
  14 W Class H (180°C)
- **485100 - Coil for High Temperature**
  8 W Class H (180°C)

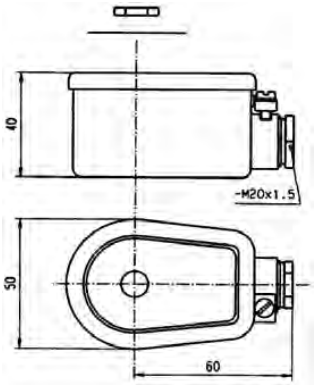

Parker Hannifin Corporation
Fluid Control Solutions Europe
Process Catalogue FCSE/1121/UK/V1.0

Tel: +45 63 12 83 00 | Email: ps@hymatik.com | www.hymatik.com | Hvidkaervej 27a, DK-5250 Odense SV, Denmark

COIL ASSEMBLY KITS

COIL ASSEMBLY KIT FOR 22 mm COIL



The coil assembly kit corresponds to the numbering system for valve housings (Valve - housing - coil/voltage).

It is composed of a nameplate with the details of the valve type, a washer and a nut to secure the 22 mm coil to the valve.

Caution: these coil assembly kits for 22 mm coils are not adapted for high flow valves, ask your distributor for the adapted kit.

Reference	Specification	Application
8993	Standard - aluminium nameplate - passivated washer and nut - pressure indication in [bar]	Standard valves
8993.03	Standard - aluminium nameplate - passivated washer and nut - pressure indication in [psi]	Standard valves
8122	Special - aluminium nameplate - stainless steel washer and nut - pressure indication in [psi]	316L St. Steel Valves
8567	Special - knurled flat aluminium nut	Valves- series 321K3…

COIL ASSEMBLY KIT FOR 32 mm COIL



The coil assembly kit corresponds to the "housing" of valve numbering system (Valve - housing - coil/voltage).

It is composed of a nameplate giving details of the valve type, a round washer and a nut to ensure the fixing between 32 mm coil and the valve.

Reference	Specification	Application
2995	Standard - Aluminium nameplate - Passivated iron washer and nut - Pressure indication in [bar]	Standards valves
2995.03	Standard - Aluminium nameplate - Passivated iron washer and nut - Pressure indication in [psi]§q	UL / CSA valves
8132	Special - Aluminium nameplate - Stainless steel washer and nut - Pressure indication in [psi]	316L St. Steel valves
2161	Special - Aluminium nameplate - Passivated iron washer and nut - Pressure indication in [bar]	Transportation valves
2168	Special AD Blue - Aluminium nameplate - Passivated iron washer and nut - Pressure indication in [bar]	Transportation valves
2169	Special AD Blue - Aluminium nameplate - Passivated iron washer and nut - Pressure indication in [bar]	Transportation valves

ACCESSORIES

DIN PLUG CONNECTOR ACCORDING TO EN 175301-803 -B

No. 481043 for Parker coil
No. 600040 for Parker coil

Electrical connection suitable for all 22 mm coils
(e.g. 488980, 481180)



DIN PLUG CONNECTOR ACCORDING TO EN 175301-803 - A

No. 486586 for standard Parker version
No. 492645 for high temperature Parker version
No. 600004 for Parker version

Electrical connection suitable for all 32 mm coils
(e.g. 481865, 492425)



METALIC ASSEMBLY KIT

Nut No. 482213 M14 x 1+ Ring No. 482214 +
O-Ring No. 483917

Coil assembly kit for offshore electrical parts
(e.g. 482870.01, 492210, 492965.01, 496565, 496700)



CABLE GLAND

No. 493426 - 1/2"-14 NPT

Electrical connection and mooring cable with 6 to 12 mm diameter,
for flameproof approved electrical parts
(e.g. 493640)



GUIDANCE CHART FOR IS-BARRIERS

Manufacturer	Reference	Ex	IS Standard Electrical Parts							IS Booster Electrical Parts		
			Ex ia IIC T6 488650.01/02 488660,01 488670,01 LCIE/AUS	Ex ia IIC T6 490885 (490895) LCIE/FM/CSA	Ex ia IIC T6 483580.01/03 483960.01/03 LCIE/AUS	Ex ia 490880 (493997) LCIE/FM/CSA	Ex ia IIB T6 482160,01 LCIE	Ex ia IIC T6 482870,01 LCIE	Ex ia 492335 LCIE/FM/CSA	Ex ia IIC T6 492965.01/02 LCIE	Ex ia IIC T6 496565 LCIE	Ex ia IIC T6 495910 LCIE
A puissance 3	NAEV 22-140	ia	●	-	●	-	●	●	-	●	●	●
	NAEV 26-100	ia	●	-	●	-	●	●	-	●	●	●
ABB	V171132-54	ib	●	-	●	-	●	●	-	●	●	●
	V171132-55	ib	●	-	-	-	●	●	-	●	●	●
	V171132-61	ia	●	-	-	-	●	●	-	●	●	●
	DO 890	ib	●	-	●	-	●	●	-	●	●	●
	S900-D04-EX	ib	●	-	●	-	●	●	-	●	●	●
BRADLEY	FEX-EX 24V	ia	●	●	●	●	●	●	-	●	●	●
COOPER	LB 2101	ia	●	●	●	●	●	●	●	●	●	●
	LB 2105	ia	●	●	●	●	●	●	●	●	●	●
	LB 2112	ia	●	●	●	●	●	●	●	●	●	●
ELCON	1881 / 1882	ia	●	●	●	●	●	●	●	●	●	●
	471 / 472	ia	●	●	●	●	●	●	●	●	●	●
	2871/2872	ia	●	●	●	●	●	●	●	●	●	●
	2874/2875/2876	ia	●	●	●	●	●	●	●	●	●	●
GEORGIN	AVB 122	ia	●	-	●	-	●	●	-	●	●	●
	AVB 125	ia	●	-	●	-	●	●	-	●	●	●
	AVB 128	ia	●	-	●	-	●	●	-	●	●	●
Hima	F3328A	ib	●	-	●	-	●	●	-	●	●	●
	F3335	ib	●	-	-	-	●	●	-	●	●	●
	H4007	ib	●	-	●	-	●	●	-	●	●	●
MTL	728P, 7128P, 7728P	ia	-	-	-	-	●	-	-	●	●	●
	728, 7028, 7128, 7728	ia	●	●	●	●	●	●	●	●	●	●
	3021, 4021, 4021S	ia	●	-	●	-	●	●	-	●	●	●
	3022	ia	-	-	-	-	●	-	-	-	-	-
	4023	ia	-	-	-	-	●	-	-	-	-	-
	4024	ia	●	-	●	-	●	●		●	●	●
	4025	ia	●	●	●	●	●	●	●	●	●	●
	5021, 5023, 5024	ia	●	-	●	-	●	●	-	●	●	●
	5025	ia	●	-	●	-	●	●	●	●	●	●
	4521 / 4523 / 4524	ia	●	-	-	-	●	●	●	●	●	●
	5521 / 5523 / 5524	ia	●	-	-	-	●	●	●	●	●	●
Pepperl & Fuchs	Z 728	ia	●	●	●	●	●	●	●	●	●	●
	Z 779	ia	●	●	●	●	●	●	●	●	●	●
	EGA-041-3	ia	-	●	●	●	●	●	●	●	●	●
	KFD2-SD-EX1.36	ia	-	-	-	-	-	●	-	-	-	-
	KFD2-SL-EX1.36	ia	-	-	-	-	-	●	-	-	-	-
	KFD2-SD-EX1.48	ia	-	●	-	●	-	●	●	●	●	●
	KFD2-SL-EX1.48	ia	-	●	-	●	-	●	●	●	●	●
	KFD2-SL-EX1.48.90A	ia	-	-	-	-	-	-	-	●	●	●
	KFD2-SL-EX1.48.90A	ia	-	-	-	-	-	-	-	●	●	●
	KFD2-SL2-EX1.LK	ia	-	●	-	●	-	●	●	●	●	●
	KFD2-SL2-EX2	ia	-	●	-	●	-	●	●	●	●	●
	KSD2-BO-EX	ia	-	●	●	●	●	●	●	●	●	●
	RSD-BO-EX4	ib	-	●	-	●	-	●	●	●	●	●
	RSD-VO-EX8	ib	-	-	-	-	-	-	-	●	●	●

Tel: +45 63 12 83 00 | Email: ps@hymatik.com | www.hymatik.com | Hvidkaervej 27a, DK-5250 Odense SV, Denmark

GUIDANCE CHART FOR IS-BARRIERS

Manufacturer	Reference	Ex	IS Standard Electrical Parts							IS Booster Electrical Parts		
			Ex ia IIC T6 488650.01/02 488660,01 488670,01 LCIE/AUS	Ex ia IIC T6 490885 (490895) LCIE/FM/CSA	Ex ia IIC T6 483580.01/03 483960.01/03 LCIE/AUS	Ex ia 490880 (493997) LCIE/FM/CSA	Ex ia IIB T6 482160,01 LCIE	Ex ia IIC T6 482870,01 LCIE	Ex ia 492335 LCIE/FM/CSA	Ex ia IIC T6 492965.01/02 LCIE	Ex ia IIC T6 496565 LCIE	Ex ia IIC T6 495910 LCIE
SIEMENS	5RD00-0AB0	ib	-	-	-	-	-	-	-	●	-	-
	7RD00-0AB0	ia	-	-	-	-	-	-	-	●	●	●
	7RD01-0AB0	ia	-	-	-	-	-	-	-	●	●	●
	7RD10-0AB0	ia	-	-	-	-	-	-	-	●	●	●
	7RD11-0AB0	ia	-	-	-	-	-	-	-	●	●	●
	7RD20-0AB0	ia	-	-	-	-	-	-	-	●	●	●
	7RD21-0AB0	ia	-	-	-	-	-	-	-	●	●	●
STAHL	9001/01-252-100-14	ia	●	●	27 V	27 V	●	●	●	●	●	●
	9001/01-280-100-10	ia	●	●	24 V	24 V	●	●	●	●	●	●
	9001/01-280-110-10	ia	●	-	24 V	-	●	●	-	●	●	●
	9002/13-280-100-04	ia	24 V	24 V	27 V	27 V	24 V	24 V	24 V	17 V	17 V	17 V
	9311/52-11-10	ia	-	●	●	25 V	25 V	●	●	15 V	15 V	15 V
	9111/63-11-00	ia	-	●	●	25 V	25 V	●	●	15 V	15 V	15 V
	9351/10-15-10	ia	-	●	●	-	-	●	●	●	●	●
	9351/10-16-10	ia	-	●		●	-	●	●	●	●	●
	9351/10-17-10	ia	-	-	-	-	-	●	-	-	-	-
	9381/10-187-050-10	ib	-	●	●	●	●	●	●	●	●	●
	9381/10-246-055-10	ib	-	●	●	●	●	●	●	●	●	●
	9381/10-246-070-10	ib	-	●	●	●	●	●	●	●	●	●
	9465/12-04-11	ib	-	●	●	-	-	●	●	●	●	●
	9475/12-04-21	ia/ib	-	●	-	●	-	●	●	●	●	●
	9475/12-04-31	ia/ib	-	-	-	-	-	-	-	●	●	●
	9475/12-08-41	ia/ib	-	-	-	-	-	-	-	-	-	-
	9475/12-08-51	ib	-	-	-	-	-	-	-	●	●	●
	9475/12-08-61	ia/ib	-	-	-	-	-	-	-	-	●	●
Turck	MK72-S01-EX	ib	-	-	-	-	●	●	-	●	●	●
	MK72-S02-EEX	ib	-	-	-	-	●	●	-	●	●	●
	MK72-S04-EEX	ib	●	-	●	-	●	●	-	●	●	●
	MK72-S05-EEX	ib	●	-		-	●	●	-	●	●	●
	MK72-S06-EEX	ib	●	-	●	-	●	●	-	●	●	●
	MK72-S07-EEX	ib	●	-		-	●	●	-	●	●	●
	MK72-S09-EEX	ia		-		-			-	-	-	-
	MK72-S12-EEX	ia	●	-	●	-	●	●	-	●	●	●
	MC72 - 41	ia	●	-	●	-	●	●	-	●	●	●
	MC72 - 43	ia	●	-	●	-	●	●	-	●	●	●
	MC72 - 44	ia		-	-	-			-	●	●	●
BARTEC	07-7331-2301/1000	ia	●	-	-	-	●	●	-	●	-	-
	07-7331-2301/1100	ia	●		●		●	●		●	-	-

If barrier reference not listed, consult factory for compatibility (tech.support.fcse@parker.com)

Tel: +45 63 12 83 00 | Email: ps@hymatik.com | www.hymatik.com | Hvidkaervej 27a, DK-5250 Odense SV, Denmark

TABLE OF VOLTAGE CODES FOR COILS AND ELECTRICAL PARTS

This table is showing the most commonly used voltage codes, for other voltages, please ask us.

VOLTAGE CODES			C1	C2	N7	L8	C4	C5	C7	P1	A5	0A	S5	P2	1P	6J	0P	P3	K8
Coil	Group	Sub-Group	12 DC	24 DC	28 DC	30 DC	48 DC	110 DC	220 DC	100/50-60	110/50	110-115/50	110-115/50 120/60	110/50-60	110-115/50-60	110-115/60	100/50-115/60	110/50-120/60	115/60
481180	1.1	-	●	●								●							
482605	1.1	-	●	●															
482606	1.1	-	●	●			●	●				●							
483590	1.1	-											●						
488980	1.1	-	●	●			●	●				●				●			
492912	1.1	-		●															
496131	1.2	-	●	●			●	●						●					●
496482	1.2	-	●	●			●	●						●					●
496637	1.2	-	●	●			●							●					●
481000	2.0	2.1	●	●			●	●	●			●				●			
481865	2.0	2.1	●	●			●	●			●								●
483371	2.0	2.1	●	●			●	●	●			●				●			
483510	2.0	2.1											●						
483520	2.0	2.1																	
485100	2.0	2.1		●	●				●										
488553	2.0	2.1																	
491514	2.0	2.1		●														●	
492070	2.0	2.1	●	●			●	●						●					
492190	2.0	2.1	●	●			●	●	●					●					
492453	2.0	2.1	●	●			●	●			●								
492670	2.0	2.1	●	●			●	●			●								
493640	2.0	2.1		●			●				●							●	
494040	2.0	2.1		●					●			●							
495870	2.0	2.1		●			●	●			●								
495875	2.0	2.1		●															
495905	2.0	2.1		●			●	●											●
496081	2.0	2.1	●	●									●						
496110	2.0	2.1											●						
HZ10	2.0	2.1																●	

Tel: +45 63 12 83 00 | Email: ps@hymatik.com | www.hymatik.com | Hvidkaervej 27a, DK-5250 Odense SV, Denmark

A1	P6	S2	A7	B7	R5	3D	7J	3P	4K	Q3	S6	F4	J3	P9	A2	B2	P0	B8	Q1	A9	5P	A4	S4
12/50	200/50-60	200-230/60	220/50	220/60	220/50-60	220-230/50	220-230/60	220-230/50-60	220-240/60	220/50-240/60	220-240/50	230/50	230/60	230/50-60	24/50	24/60	24/50-60	240/60	240/50-60	380/50	380/50-440/60	48/50	48/50-60
						•									•								
						•	•								•	•						•	
											•						•						•
						•	•								•	•						•	
														•			•						•
														•			•						•
														•			•						
•						•			•			•			•	•					•	•	
						•							•		•	•				•		•	
•						•			•						•	•						•	
											•						•						•
											•					•	•							
						•									•						•		
										•													
					•									•			•		•				
					•									•			•		•				•
						•									•					•		•	
												•			•			•				•	
										•		•				•							
						•									•						•		
						•									•								
						•																	
												•			•			•				•	
											•						•	•					
											•						•						•
										•						•							

TABLE OF VOLTAGE CODES FOR COILS AND ELECTRICAL PARTS

This table is showing the most commonly used voltage codes, for other voltages, please ask us.

VOLTAGE CODES			C1	C2	N7	L8	C4	C5	C7	P1	A5	0A	S5	P2	1P	6J	0P	P3	K8
Coil	Group	Sub-Group	12 DC	24 DC	28 DC	30 DC	48 DC	110 DC	220 DC	100/50-60	110/50	110-115/50	110-115/50 120/60	110/50-60	110-115/50-60	110-115/60	100/50-115/60	110/50-120/60	115/60
481044	2.0	2.2									●						●		
486265	2.0	2.2	●	●			●				●						●		
492425	2.0	2.2	●	●							●								
495880	2.0	2.2		●							●								
496155	2.0	2.2		●			●				●								
HZ11	2.0	2.2	●	●			●											●	
482730	3.0	-		●			●				●								●
484990	4.0	-													●				
485400	4.0	-	●	●			●	●											
495915	4.0	-		●			●								●				
482740	6.0	-		●			●	●											
495900	6.0	-	●	●			●	●											●
496125	6.0	-		●			●	●											
483580.01	7.0	-			●														
488650.01	7.0	-			●														
495910	8.0	-			●														
492210	9.0	-		●															
492965.01	9.0	-			●														
496565	9.0	-			●														
492310	10.1	-	●	●			●	●	●					●					
496560	10.1	-		●			●												
496800	10.1	-		●			●												
496895	10.1	-		●			●												
496555	10.2	-		●			●												
496700	10.2	-		●			●												
497105	10.3	-	●	●			●	●							●				

A1	P6	S2	A7	B7	R5	3D	7J	3P	4K	Q3	S6	F4	J3	P9	A2	B2	P0	B8	Q1	A9	5P	A4	S4
12/50	200/50-60	200-230/60	220/50	220/60	220/50-60	220-230/50	220-230/60	220-230/50-60	220-240/60	220/50-240/60	220-240/50	230/50	230/60	230/50-60	24/50	24/60	24/50-60	240/60	240/50-60	380/50	380/50-440/60	48/50	48/50-60
		•	•	•								•			•	•				•			
		•	•	•								•			•					•			
												•			•								
												•			•								
												•			•								
										•		•			•	•							
						•																•	
								•									•						•
								•									•						•
												•			•			•				•	
					•									•			•		•				•
														•									
														•									
														•									
														•									
								•									•						

TECHNICAL INFORMATION ABOUT SOLENOID VALVES

General Information

Solenoid valves are electro-mechanical devices used for interrupting or diverting the flow of fluids by opening or closing one or more orifices.

The solenoid valve is a combination of three basic components:

1. An electromagnet consisting of a solenoid (windings) and a magnetic yoke.
2. A pilot with a moveable plunger (which, in some cases directly opens and closes the valve).
3. A valve body with an orifice opened or closed by plunger or diaphragm to enable or prevent flow of the medium.

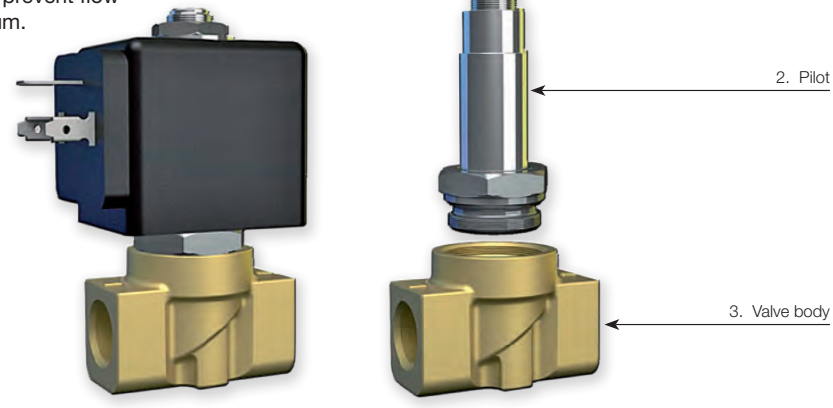

Operating principles

The term solenoid refers to operator and coil, also known as pilot or magnetic actuator.

The coil consists of copper wire wound on a support reel. When electric current is applied into the coil, magnetic flow lines are generated which are stronger in the coil center.

This magnetic flow raises the moveable plunger in the coil until it brings it into contact with the pole piece. The valve body has an orifice through which the fluid flows when the valve is open.

The moveable plunger has an integral seat which when the solenoid coil is energised, moves off the valve (direct operated) orifice or diaphragm (pilot operated) orifice opening the valve.

When the coil is de-energised, a return spring brings the plunger back to the original closing position, thus cutting off the flow of the fluid.

Tel: +45 63 12 83 00 | Email: ps@hymatik.com | www.hymatik.com | Hvidkaervej 27a, DK-5250 Odense SV, Denmark

BASIC COMPONENTS OF A SOLENOID VALVE

Valve body: Main part of the solenoid valve including ports, seat and orifices.

Solenoid tube assembly: Cylinder, in stainless steel, hermetically sealed and closed at one extremity. It is the guide channel of the moveable plunger which is moved magnetically. The solenoid coil is fitted on the external side of the enclosing tube.

Moveable plunger: Made by ferritic stainless steel, it is attracted by the solenoid magnetic field and slides inside the tube.

Plunger spring (or return spring): Used to hold the moveable plunger in position and to return it when de-energized.

Seat seal: Part of the moveable plunger, it is used to close a valves main orifice or pilot orifice.

Electromagnet (or solenoid coil): Electrical part consisting of a copper windings (solenoid) along, with a magnetic yoke (armature), when electric current flows through, it generates a magnetic field atracting the moveable plunger.

Housing: Part that contains and protects the coil.

Yoke: Metalic case surounding the coil and concentring electro-magnetic force on the moveable plunger.

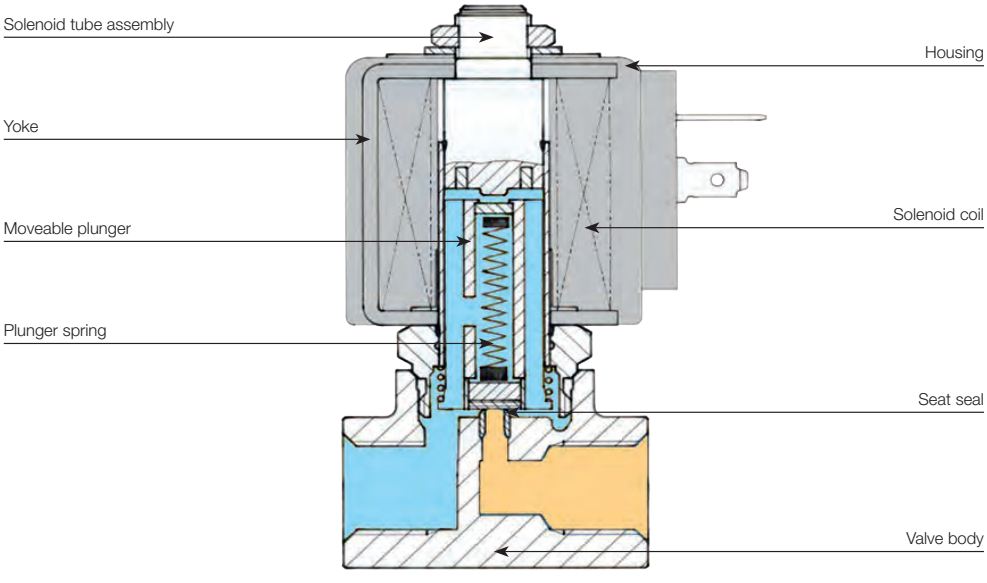

TECHNICAL VOCABULARY USED IN TABLES

Actuation	Body	Function	Port Size	Orifice (mm)	Flow Factor Kv(l/min)	MOPD (bar)	Max Fluid Temp. (°C)	Page

NORMALLY CLOSED

Port size	Orifice Ø	Flow factors			Operating Pressure Differential			Fluid Temp.		Seat Seal				Power		Coil Group	Dwg. No.
					Min	Max(MOPD)		Min	Max		Valve Ref.	Housing Ref.	Coil Ref.				
BSP	mm	Kv l/min	KV m^3/h	Qn l/min	bar	AC bar	DC bar	°C	°C					AC W	DC W		

The basic technical features of each solenoid valve are indicated in the tables, the terminology used is shown and explained below. Please notice that in certain sections you will have the choice between two product ranges: Parker valves, within blue tables and the Parker Lucifer valves, within orange tables.

Actuation: The mechianical method used to control the flow.

Body: Main part of the solenoid valve with the ports, seats and orifice needed.

Function: The way the valve operates when de-energised.

Port Size: Fitting dimensions are defined as threaded in inches (G), in BSP or Sub-base, when a flat interface for ports is adopted.

Orifice (mm): Main orifice diameter in millimetres (nominal diameter).

Flow Factors: Define the quantity of water which flows through the solenoid valve with a pressure drop of 1 bar during one minute. Expressed in l/min and m^3/h.

Max Fluid Temperature: Maximum fluid temperature the valve can withstand.

Max Ambient Temperature: Maximum ambient temperature the valve can withstand.

Minimum Operating Pressure Differential: The lowest differential pressure required for operation (bar).

Maximum Operating Pressure Differential (MOPD): The highest working differential pressure with 90% of the rated voltage (-10% Vn) applied to the solenoid coil (for AC) and 95% of the rated voltage (-5% Vn)(for DC).

Tel: +45 63 12 83 00 | Email: ps@hymatik.com | www.hymatik.com | Hvidkaervej 27a, DK-5250 Odense SV, Denmark

Fluid Temperature:	Minimum and Maximum admissible temperature for the media used (°C).
Seat seal:	Material used for the seat discs.
Valve ref.:	It identify the pressure vessel
Valve type:	Refers to the Parker valve type
Housing ref.:	Element to fix the coil on the valve
Coil Ref.:	Compatible coil reference.
Coil type:	Compatible coil advised.
Power:	Power consumption of a specific electrical part on selected pressure vessel, rated by AC and DC (W). Power consumption must be considered in cold conditions for the coil, at TAmb: +20°C. For 483510, 481865 and 496081 series, power consumption indicated in the tables must be considered in warm conditions.
Coil group:	Please refer to the specific section for the coil compatibility groups.
Dwg. No.:	Drawing number.

Tel: +45 63 12 83 00 | Email: ps@hymatik.com | www.hymatik.com | Hvidkaervej 27a, DK-5250 Odense SV, Denmark

TECHNICAL INFORMATION

Solenoid valves are highly engineered products that can be used in many diverse applications.

In addition to operational functionality, media compatibility and suitability for the operating environement when selecting the best product for a given application.

This section provides a brief overview of the components, actuation and function modes of solenoid valves avaible from Parker Hanninfin - FCSE.

Different Technologies:

Solenoid valves are electrically operated devices used to control flow.
The most common types of solenoid valve are:



Direct Operated Valves



Magnalift Valves

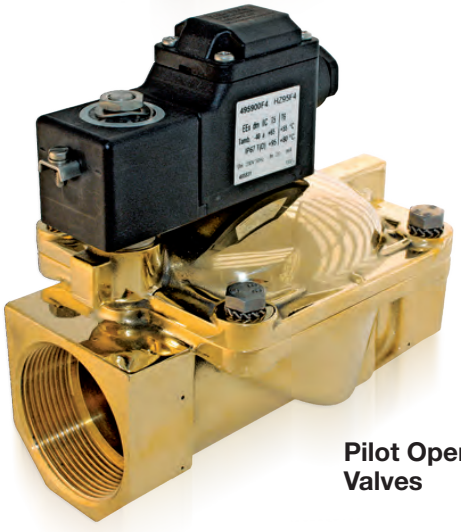

Pilot Operated Valves

Parker Hannifin Corporation
Fluid Control Solutions Europe
Process Catalogue FCSE/1121/UK/V1.0

Tel: +45 63 12 83 00 | Email: ps@hymatik.com | www.hymatik.com | Hvidkaervej 27a, DK-5250 Odense SV, Denmark

Magnetic force is used directly to open or close the plunger which controls the passage of the fluid. Performances are limited by the coil, the pressure, and the valve orifice size. For direct operated valves, the minimum working pressure is 0 bar and the maximum pressure relies on the combination (valve/coil) chosen.

Direct Operated Valve

De-energised

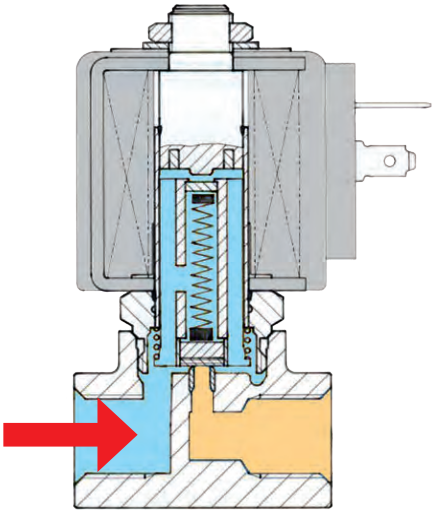

Energised

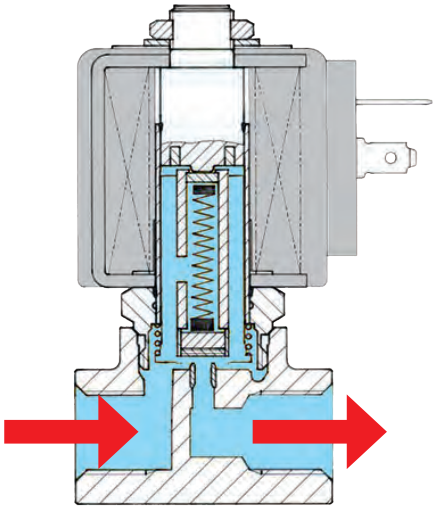

Example:

- 121 Series

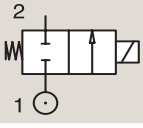

Parker Hannifin Corporation
Fluid Control Solutions Europe
Process Catalogue FCSE/1121/UK/V1.0

Tel: +45 63 12 83 00 | Email: ps@hymatik.com | www.hymatik.com | Hvidkaervej 27a, DK-5250 Odense SV, Denmark

TECHNICAL INFORMATION

PILOT OPERATED VALVE

To control a higher flow, it is necessary to use pilot operated valves. The supply pressure enters the direct operated "pilot stage" which directs the flow to a "pilot chamber" which,in turn, applies the pilot pressure over a large area (generally a diaphragm or piston). Therefore, a large force is generated to move the main sealing elements against higher pressure or over a large orifice.
One condition of operation is to have a minimum pressure available to shift the valve (indicated in the catalogue). In most applications, this presents no particular problems (refer to magnalift valve section). The pressure rating of the valve starts between 0.1 to 0.5 bar (depending on the valve).
(NB. Pilote Operated Valves are also called Servo Operated Valves).

Pilot Operated Valve

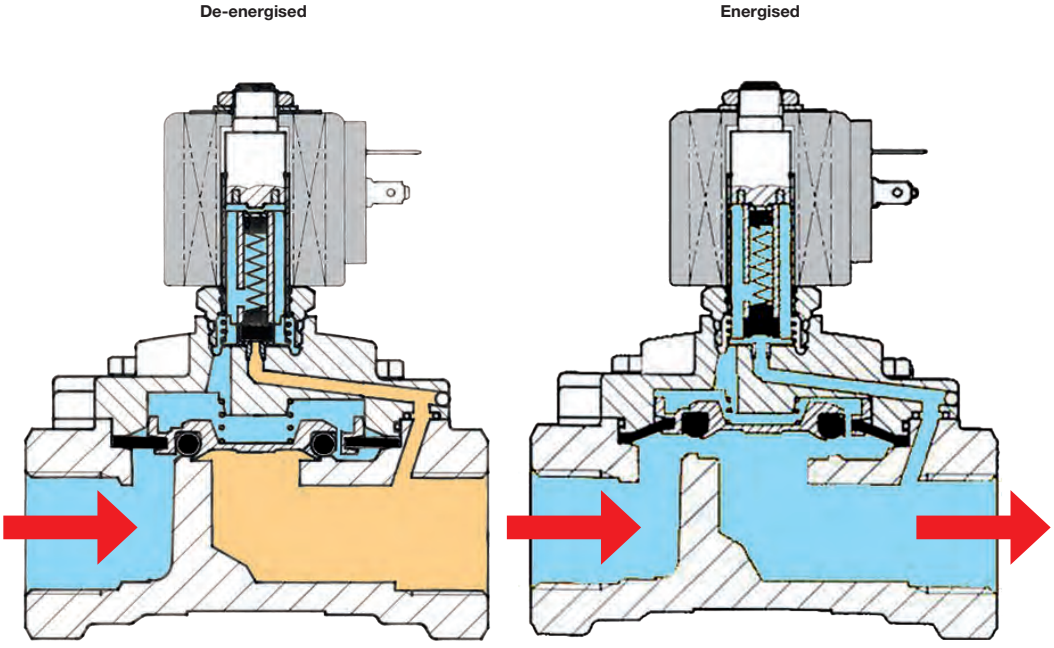

Example:

- 321 Series
- 7321B Series

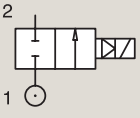

Parker Hannifin Corporation
Fluid Control Solutions Europe
Process Catalogue FCSE/1121/UK/V1.0

The magnalift valves combine the features of the direct operated and pilot operated valves. A mechanical link between the plunger and diaphragm retainer allows the valve to operate as a direct operated valve at low pressures and as a pilot operated valve at higher pressures. Magnalift valves are specially designed for applications where 0 pressure is needed to operate the valve, as well as bigger flow than a direct operated valve.

Magnalift Operated Valve

De-energised **Energised**

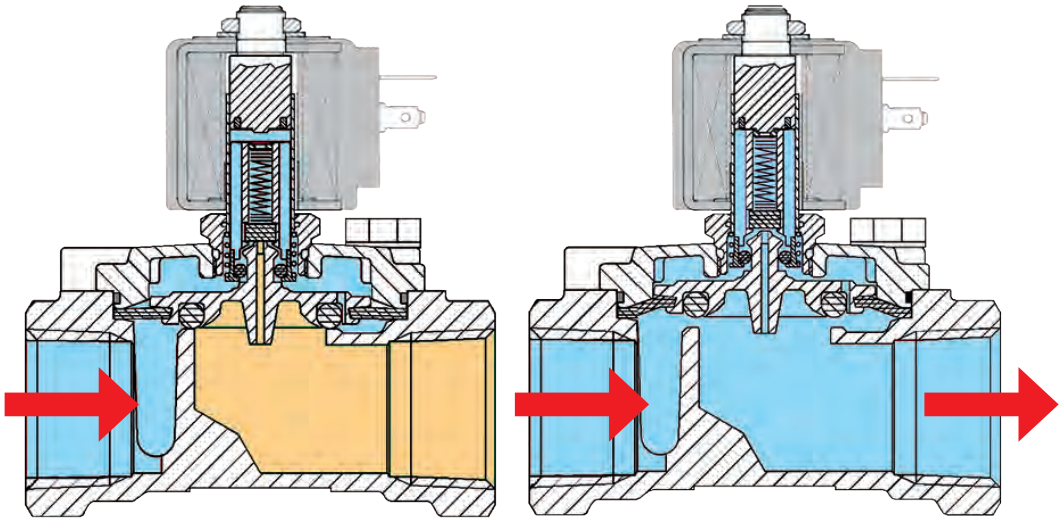

Example:

- 221 Series

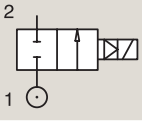

Parker Hannifin Corporation
Fluid Control Solutions Europe
Process Catalogue FCSE/1121/UK/V1.0

NORMALLY CLOSED VALVE

Most of our valves are available in normally closed and normally open configuration when not energized. In certain applications, you may require a normally open valve (open function in case of current failure). The differentiating factor of design of this technology, is based upon the design of the seat seal, which is reversed in comparaison to a normally closed valve.

Normally Closed Valve

De-energised

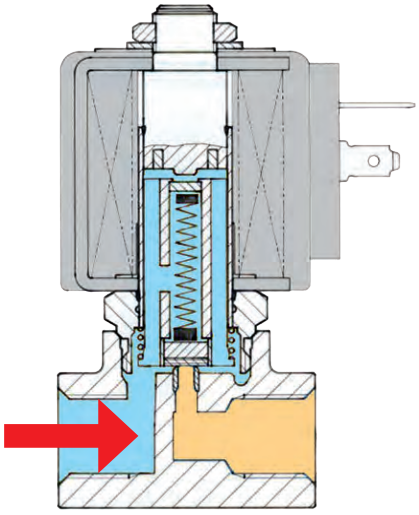

Energised

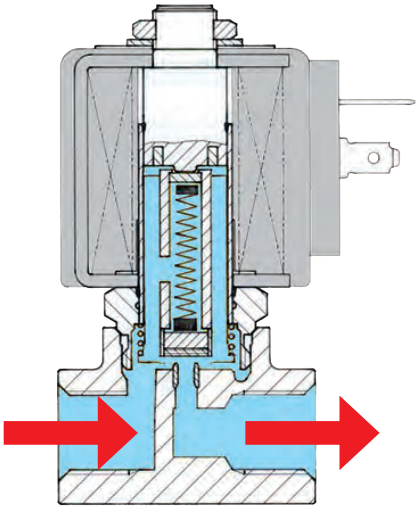

Example:
- 121 Series

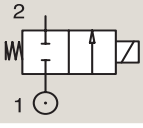

Parker Hannifin Corporation
Fluid Control Solutions Europe
Process Catalogue FCSE/1121/UK/V1.0

Tel: +45 63 12 83 00 | Email: ps@hymatik.com | www.hymatik.com | Hvidkaervej 27a, DK-5250 Odense SV, Denmark

Normally Open Valve

De-energised

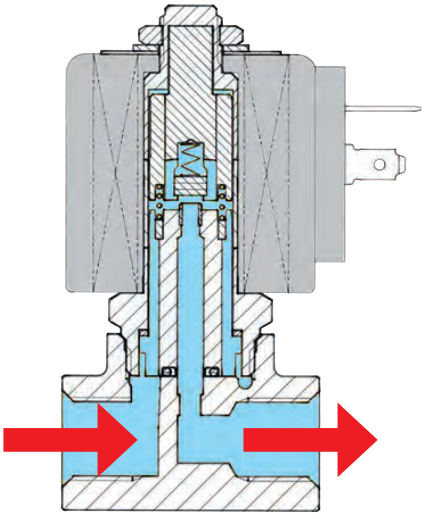

Energised

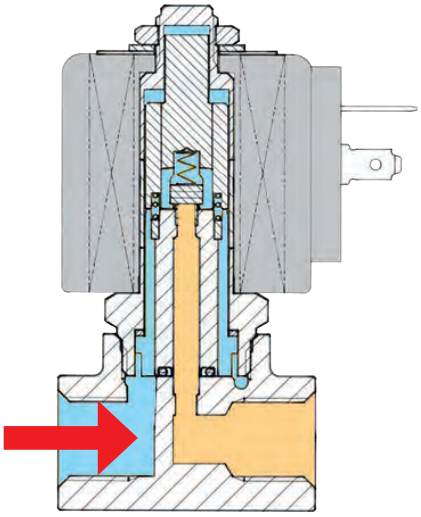

Example:

- 122 Series

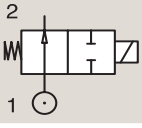

FLOW AND PRESSURE RANGES

Area of operation:

Each valve principle, as described in the previous pages, has a defined area of operation related to its pressure and flow capabilities. The following graph shows which type of valve is suitable for a certain situation.

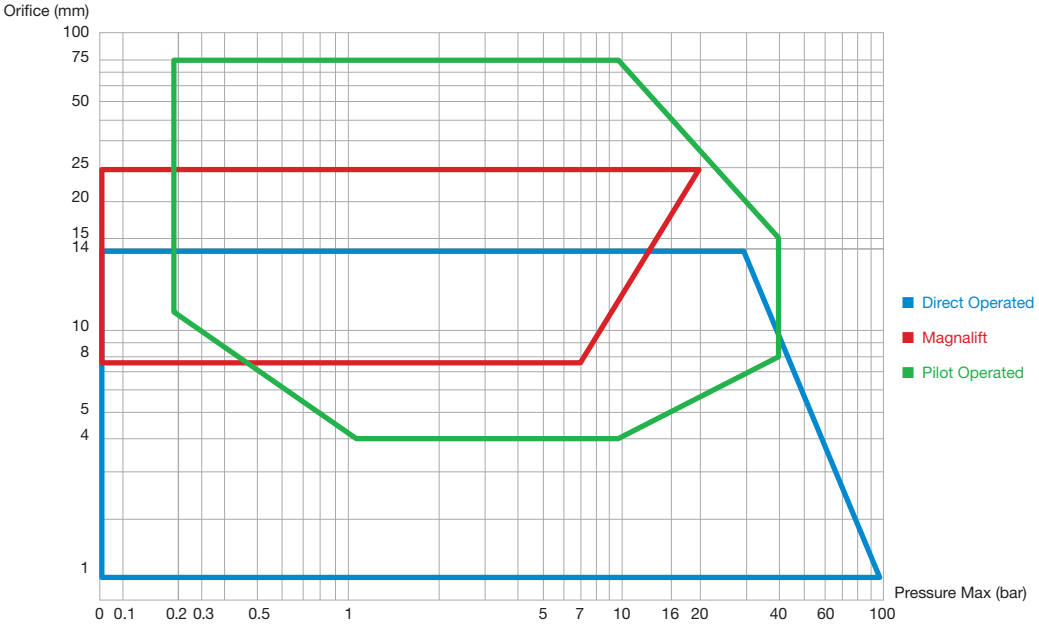

Areas of operation of Parker solenoid valves.

Parker Hannifin Corporation
Fluid Control Solutions Europe
Process Catalogue FCSE/1121/UK/V1.0

Tel: +45 63 12 83 00 | Email: ps@hymatik.com | www.hymatik.com | Hvidkaervej 27a, DK-5250 Odense SV, Denmark

SIZING SOLENOID VALVES

The correct choice of solenoid valve is essential as it determines the regulation and performance required for practical application on a system. In order to decide on the exact type of solenoid valve, various parameters have to be known.
However the calculation method, based on the flow coefficient Kv, has proved highly practical as it can be determined on the basis of:

- Required flow rate
- Type of fluid and relative viscosity
- Flow resistance
- Specific gravity and temperature

This flow coefficient Kv is determined as defined in the VDI/VDE 2173 standards.
It represents the flow of water in m3/h or L/min with a temperature from 5 to 30°C which passes through the solenoid valve with a pressure drop of 1 bar.

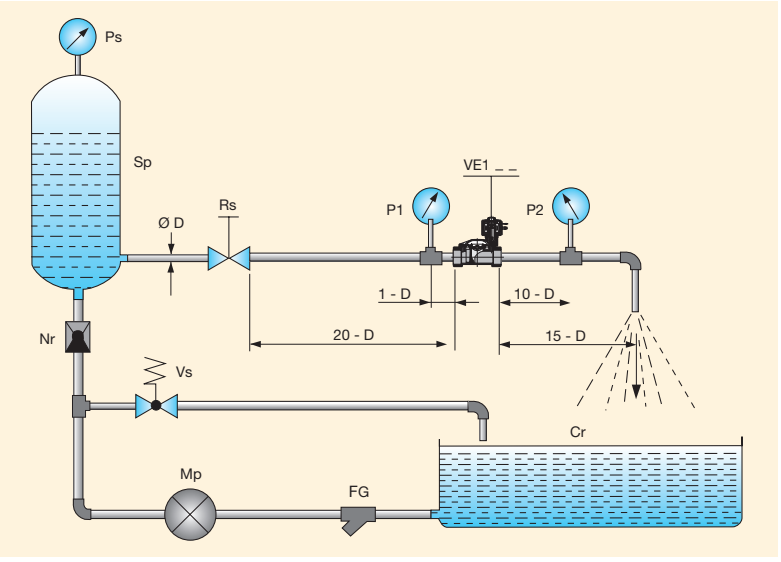

Note:

The flow coefficient used in the USA is known as Cv and represents the water flow rate in US gallons per minute with a pressure drop ΔP of 1 psi.

To convert **C_V** in **Kv** and vice versa use:

1 K_V = 0.862 C_V
1 C_V = 1.16 K_V

FG = Grid Filter **Mp** = Pump **Vs** = Safety Valve **Nr** = Check Valve **Sp** = Pressure Tank **Ps** = Static Pressure Manometer

After existing conditions have been converted into this factor Kv, the type of valve is found by referring to the pages in the related sections in this catalogue.

Parameters used for selecting the solenoid valve are in the table next page.

Consult conversion tables of the various units of measurement as defined by the ISO (International Standards Organisation) - I.S. (International System) set out in this catalogue.

Tel: +45 63 12 83 00 | Email: ps@hymatik.com | www.hymatik.com | Hvidkaervej 27a, DK-5250 Odense SV, Denmark

FLOW AND PRESSURE RANGES

Pressure
symbol **(P)**
unit of measurement **[bar]**
Working pressure

Pressure drop
symbol **(ΔP)**
unit of measurement **[bar]**
Pressure difference between inlet (P_1) and outlet (P_2) of the solenoid valve when a medium is flowing through the valve ($\Delta P = P_1 - P_2$).

Flow cœfficient
symbol **(Kv)**
unit of measurement **[m³/h]**

Specific gravity of the medium
symbol **(γ)**
unit of measurement **[Kg/dm³]**

Temperature of the medium
symbol **(t)**
unit of measurement **[°C]**

Flow rate

- for liquids
  symbol **(Q)**
  unit of measurement **[m³/h]**
- for gases
  symbol **(Qn)**
  unit of measurement **[Nm³/h]**
- for steam
  symbol **(Qv)**
  unit of measurement **[Kg/h]**

Specific volume
symbol **(Vs)**
unit of measurement **[m³/Kg]**

a) Solenoid valves for liquids:

Flow rate: $Q = Kv \cdot \sqrt{\frac{\Delta P}{\gamma}}$ where: $Q = m^3/h$, $\Delta P = bar$, $\gamma = Kg/dm^3$

Flow coefficient:

$$Kv = Q \cdot \sqrt{\frac{\gamma}{\Delta P}}$$

In the case of liquids with viscosity greater than 3°E (22 cStokes) the Kv is modified according to the formula:

$$Kv_1 = Kv + C \qquad C = \frac{\delta \cdot \sqrt{Kv}}{200 \cdot Q} + 1$$

where C is the viscosity correction factor calculated by means of the formula:
where:
δ = kinematic viscosity of the fluid expressed in centistokes
Kv = flow rate factor of the solenoid valve
Q = flow rate in m^3/h.

Pressure drop:

$$\Delta P = \gamma \cdot \left(\frac{Q}{Kv}\right)^2$$

Tel: +45 63 12 83 00 | Email: ps@hymatik.com | www.hymatik.com | Hvidkaervej 27a, DK-5250 Odense SV, Denmark

b) Solenoid valves for gases:

If $\Delta P \leq 1/2\ P_1$ use the following formulae:

Flow rate: $Qn = 514 \cdot Kv \cdot \sqrt{\frac{\Delta P \cdot P_2}{\gamma n \cdot (273 + t)}}$

where: $Qn = Nm^3/h$ $P_1 = bar$ $P_2 = bar$

Flow coefficient: $Kv = \frac{Qn}{514} \cdot \sqrt{\frac{(273+t) \cdot \gamma n}{\Delta P \cdot P_2}}$

$t = °C$
$\gamma n = Kg/m^3$

Pressure drop: $\Delta P = \frac{(273 + t) \cdot \gamma n}{P_2} \cdot \frac{Qn^2}{(514 \cdot Kv)^2}$

If $\Delta P > 1/2\ P_1$ use the following formula:

$$Qn = 757 \cdot Kv \cdot \sqrt{\frac{\Delta P \cdot P_2}{(273 + t) \cdot \gamma n}}$$

c) Solenoid valves for steam:

If $\Delta P \leq 1/2\ P_1$ use the following formulae:

Flow rate: $Qv = 31,7 \cdot Kv \cdot \sqrt{\frac{\Delta P}{Vs}}$

where: $Qv = Kg/h$ $\Delta P = bar$ $Vs = m^3/Kg$

Flow coefficient: $Kv = \frac{Qv}{31,7} \cdot \sqrt{\frac{Vs}{\Delta P}}$

Pressure drop: $\Delta P = Vs \cdot \frac{Qv^2}{(31,7 \times Kv)^2}$

If $\Delta P > 1/2\ P_1$ use the following formula:

$$Qv = 22,4 \cdot Kv \sqrt{\frac{P_1}{Vs}}$$

Notes:

1) Should the value ΔP not be specified, use the following, which is based on experience:

- For liquids only in the case of free discharge ΔP = 90% of the input pressure (P_1).
- For gases never use a ΔP of more than 50% of the absolute inlet pressure, since the excessive pressure drop may cause an irregular flow rate. In most cases, ΔP can be considered as 10% of the input pressure.

2) Specific volume value (Vs) for dry saturated steam, see the table in diagram 3.

Tel: +45 63 12 83 00 | Email: ps@hymatik.com | www.hymatik.com | Hvidkaervej 27a, DK-5250 Odense SV, Denmark

FLOW RATE FOR LIQUIDS

The liquid flow through a pipe or a valve is given by:

$$Q = Kv \cdot \sqrt{\frac{\Delta P}{\gamma}}$$

Where **Q** = Flow **[l/min]**

ΔP = Differential Pressure **[bar]**

γ = Density of the fluid **[kg/dm³]** (water **γ = 1 [kg/d m³]**)

kv = Flow Factor **[m³/h]**

Flow factor kv:

The kv flow factor of a valve is defined as the flow rate of water in litres per minute with a pressure drop of 1 bar across the valve.

Valve manufactuerers use different definitions for kv. It may be expressed in l/h or m³/h.

Care should therefore be taken when comparing values.

Maximum flow rate Qmax.

For particular 2-way valves the maximum flow must be limited for reasons of mechanical resistance and durability.

A very high flow velocity may dislocate a popet sealing or a diaphragm.

Maximum flow rates are indicated in the catalogue.

Flow factors

Kv l/min	KV m³/h	Qn l/min

NORMALLY CLOSED

Port size	Orifice Ø	Flow factors			Operating Pressure Differential Min	Max(MOPD)		Fluid Temp. Min	Max	Seat Seal	Valve Ref.	Housing Ref.	Coil Ref.	Power		Coil Group	Dwg. No.
BSP	mm	Kv l/min	KV m³/h	Qn l/min	bar	AC bar	DC bar	°C	°C					AC W	DC W		

Parker Hannifin Corporation
Fluid Control Solutions Europe
Process Catalogue FCSE/1121/UK/V1.0

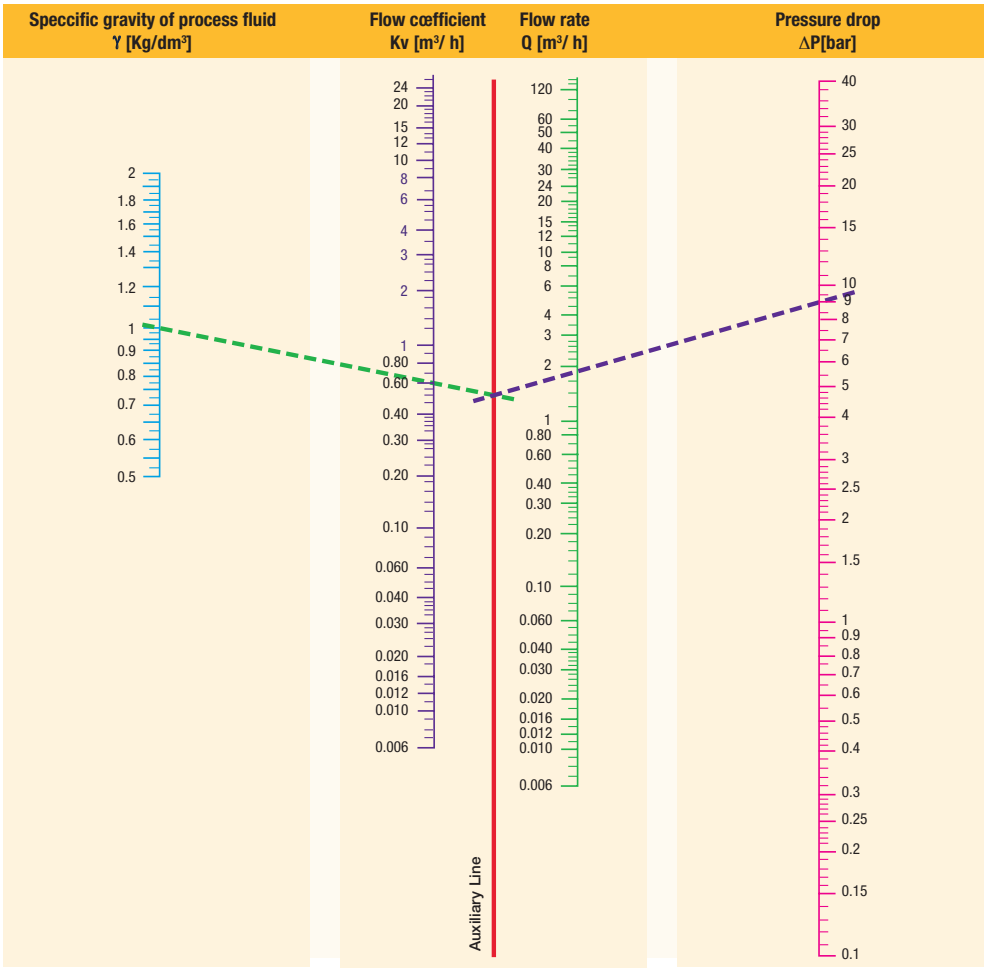

Monogram for liquid flow calculation

Specific gravity of the most common fluids (ϒ = Kg/dm³) - (t = 15°C - P = 760 mm Hg)					
Acetone	0.76	**Benzenol**	0.90	**Naphtha**	0.76
Water	1.00	**Beer**	1.02	**Pentane**	0.63
Sea water	1.02	**Hexane**	0.66	**Vegetable oil**	0.92
Ethyl alcohol	0.79	**Ethane**	0.68	**Hydraulic oil**	0.92
Methyl alcohol	0.81	**Diesel oil**	0.70	**Wine**	0.95
Petrol	0.68	**Milk**	1.03		

Tel: +45 63 12 83 00 | Email: ps@hymatik.com | www.hymatik.com | Hvidkaervej 27a, DK-5250 Odense SV, Denmark

FLOW RATE FOR GASES

The gas flow through a valve is given by:

$$Q = C \cdot P_1 \cdot k_T \cdot \omega \cdot \gamma_{air} / \gamma_{gas}$$

Where
- **Q** = Flow Rate **[dm³/s]**
- **C** = Conductance **[dm³/s.bar]**
- P_1 = Inlet Pressure **[bar abs]**
- γ = Specific Weight **[kg/m³]**
- k_T = Temperature Correction Factor

$$\omega = \sqrt{1 - \frac{P_2/P_1 - b}{1 - b}} \qquad k_T = \sqrt{\frac{293}{273 + \text{Temp. °C}}}$$

Nominal Flow Qn:

Calculations can be made with specific flow factors based on the CETOP RP 50P standard.

For practical purposes and ease of valve selection the catalogue shows the nominal flow Qn.

The nominal flow Qn is defined as the flow rate (L/min) of air across the valve when the inlet pressure P_1 = 6 bar and the pressure drop ΔP = 1 bar.

N.B.
The values of the flow factors and flow rates mentioned in catalogues are subjet to +/-15% tolerances.

Pneumatic application: $\gamma_{air} / \gamma_{gas} = 1$

a) Choked flow conditions $P_2 \leq b.P_1$
in this case $\omega = 1$ --> $Q = C \cdot P_1 \cdot kT$

b) Free flow conditions $P_2 > b.P_1$
in this case --> $Q = C \cdot P_1 \cdot kT \cdot \omega$

Tel: +45 63 12 83 00 | Email: ps@hymatik.com | www.hymatik.com | Hvidkaervej 27a, DK-5250 Odense SV, Denmark

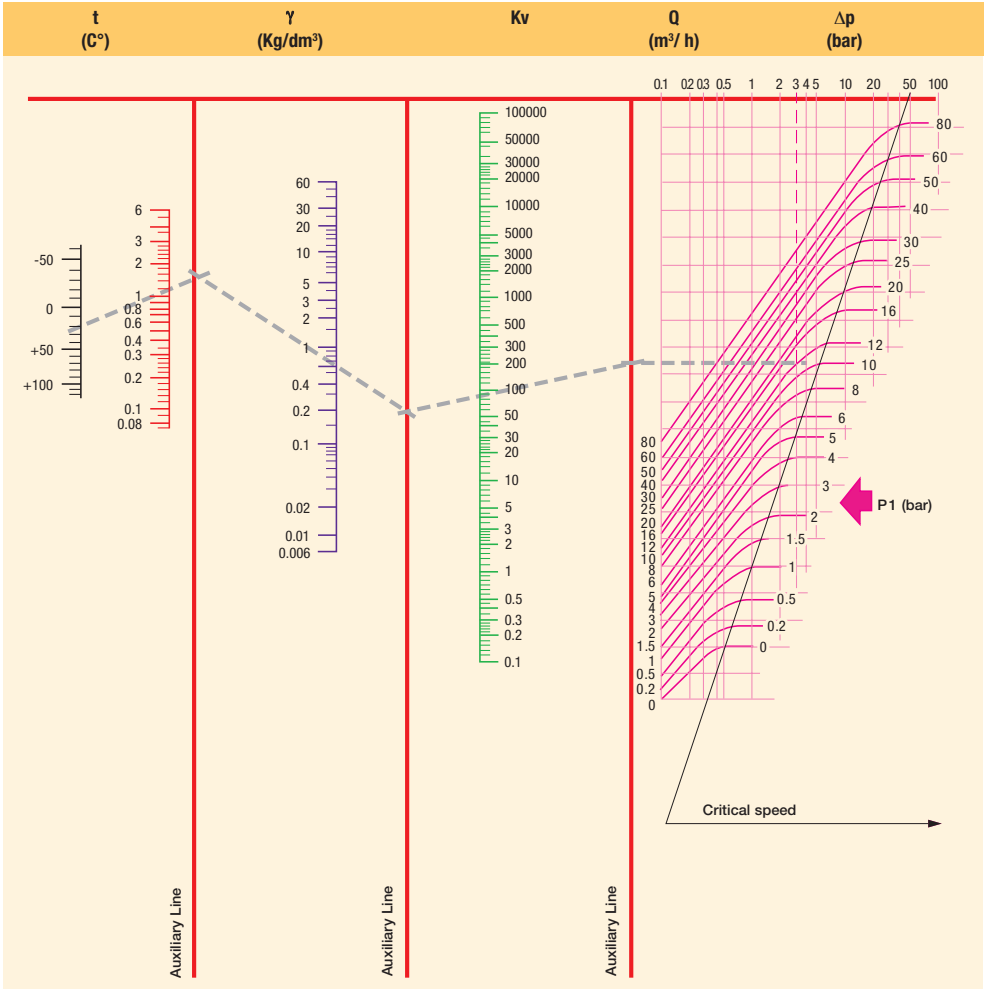

t = Fluid Temperature **γN** = Specific Gravity **Kv** = Flow Cœfficient **Qn** = Flow Rate **Δp** = Pressure Drop **P_1** = Inlet Pressure

Specific gravity of the most common gases (γ = Kg/m³) - (t = 0°C - P = 760mm Hg)					
Acetylene	1.176	**Helium**	0.179	**Natural gas**	0.723
Carbon dioxide	1.965	**Ethane**	1.035	**Methane**	0.722
Air	1.293	**Ethylene**	1.259	**Carbon monoxide**	1.250
Argon	1.780	**Hydrogen**	0.089	**Oxygen**	1.429
Nitrogen	1.255			**Propane**	1.520
Butane	2.000			**Steam**	0.805

TECHNICAL INFORMATION

Diagram 3 for Dry Satured Steam

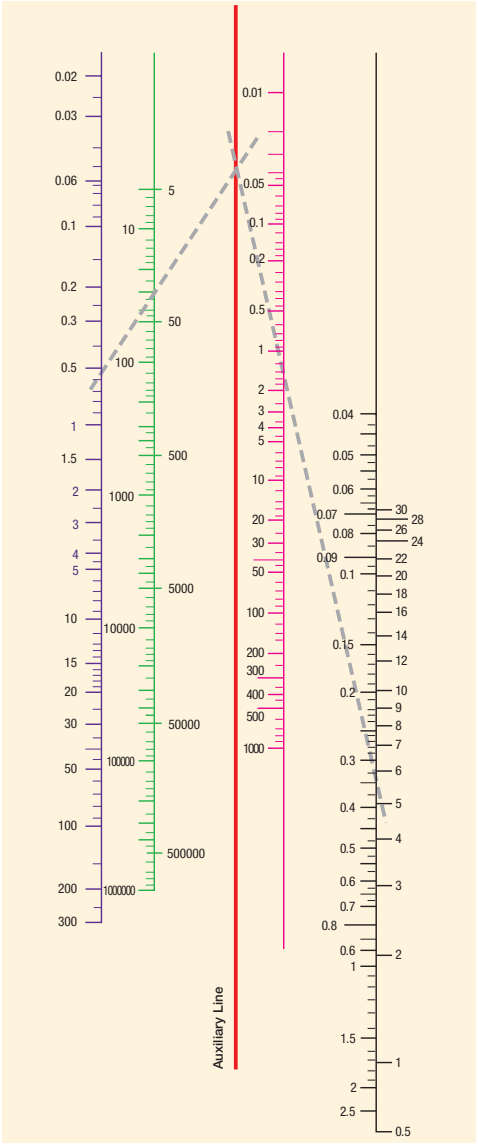

Steam (Dry Satured) Data

P_2 bar	Temp. °C	Vs m³/Kg	P_2 bar	Temp. °C	Vs m³/Kg
0.01	6.6	131.600	10.00	179.0	0.200
0.02	17.1	68.300	110.00	183.2	0.181
0.03	23.7	46.500	120.00	187.1	0.176
0.04	28.6	35.500	13.00	190.7	0.155
0.05	32.5	28.700	14.00	194.1	0.144
0.06	35.8	24.200	15.00	197.4	0.135
0.08	41.1	18.500	16.00	200.4	0.126
0.10	45.4	15.000	17.00	203.4	0.119
0.20	5 9.7	7.800	18.00	206.2	0.113
0.30	68.7	5.330	19.00	208.8	0.107
0.40	75.4	4.070	20.00	211.4	0.102
0.50	80.9	3.300	22.00	216.2	0.093
0.60	85.5	2.790	24.00	220.8	0.085
0.70	89.5	2.410	26.00	225.0	0.079
0.80	93.0	2.130	28.00	229.0	0.073
0.90	96.2	1.910	30.00	232.8	0.068
1.00	99.1	1.730	32.00	236.4	0.064
1.50	110.8	1.180	34.00	239.8	0.060
2.00	119.6	0.900	36.00	243.1	0.057
2.50	126.8	0.730	38.00	246.2	0.053
3.00	132.9	0.620	40.00	249.2	0.051
3.50	138.2	0.530	45.00	256.2	0.045
4.00	142.9	0.470	50.00	262.7	0.040
4.50	147.2	0.420	55.00	268.7	0.036
5.00	151.1	0.380	60.00	274.3	0.033
5.50	154.7	0.350	65.00	279.6	0.030
6.00	158.1	0.320	70.00	284.5	0.028
6.50	161.2	0.300	80.00	293.6	0.024
7.00	164.2	0.280	90.00	301.9	0.021
7.50	167.0	0.260	100.00	309.5	0.018
8.00	169.6	0.250	150.00	340.5	0.011
8.50	172.1	0.230	200.00	364.2	0.006
9.00	174.5	0.220	225.00	374.0	0.003
9.50	176.8	0.210			

Kv = Flow Coefficient **Qv** = Flow Rate **Δp** = Pressure Drop **Vs** = Specific Volume P_2 = Outlet Pressure

Tel: +45 63 12 83 00 | Email: ps@hymatik.com | www.hymatik.com | Hvidkaervej 27a, DK-5250 Odense SV, Denmark

VISCOSITY CONVERSION TABLE

Centistokes cStokes mm²/S	°Engler °E	Saybolt Universal Second SSU	Rewood Second N°1 SRW N°1
1	1	-	-
12	2	65	55
22	3	100	90
30	4	140	120
28	5	175	155
45	6	210	185
60	8	275	245
75	10	345	305
90	12	415	370
115	15	525	465
150	20	685	610
200	26	910	810
300	39	1 385	1 215
400	53	1 820	1 620
500	66	2 275	2 025
750	97	3 365	2 995
1 500	197	6 820	6 075

OTHER USEFUL FORMULAS

Formulas:

°C	=	(°F - 32) x 5/9
°F	=	(°C x 9/5) + 32
m³/h	=	l/min x 0.06
l/min	=	m³/h x 16,67
m³/sec	=	m³/h x 2,778 x 10^{-4}
m³/sec	=	l/min x 1,667 x 10^{-5}

Examples:

(**167°F**-32) x 5/9	=	**75°C**
(**30°C** x 9/5) + 32	=	**86°F**
100 l/min x 0.06	=	**6 m³/h**
9 m³/h x 16,67	=	**150 l/min**
18.000 m³/h x 2.778 x 10 -4	=	**5 m³/sec**
479.904 l/min x 1.667 x 10-5	=	**8 m³/sec**

NOTES

Tel: +45 63 12 83 00 | Email: ps@hymatik.com | www.hymatik.com | Hvidkaervej 27a, DK-5250 Odense SV, Denmark

APPENDIX

NOTES

Tel: +45 63 12 83 00 | Email: ps@hymatik.com | www.hymatik.com | Hvidkaervej 27a, DK-5250 Odense SV, Denmark

INDEX FOR EXPLOSION PROOF ELECTRICAL PARTS

Coil Reference	Coil Group	Designation	Power DC Pn (W)	Power AC Pn (W)	Ambient Temperature	UL	Degree of Protection	ATEX or NEMA 4X Protection (Gas)	Page
496637	1.2	Explosion proof electrical part "nc AC", 22 mm, double frequency	3.0	3.0	-40°C to +50°C	-	IP65	II 3 GD Ex tc IIIC T 95°C	273
495880	2.0/2.2	Explosion proof electrical part "nc AC", 32 mm	14.0	14.0	-40°C to +50°C	-	IP65	II 3 GD Ex nc AC IIC T3	277
496155	2.0/2.2	Explosion proof increased safety electrical part "nc AC", 50 mm	14.0	14.0	-40°C to +65°C	-	IP67	II 3 GD Ex nc AC IIC T3	279
495915	4.0	Explosion proof increased safety electrical part "nc AC", 50 mm	13.0	11.0	-40°C to +65°C	-	IP67	II 3 GD Ex nc AC IIC T3	278
495870	2.0/2.1	Explosion proof electrical part "nc AC", 32 mm	9.0	8.0	-40°C to +50°C	-	IP65	II 3 GD Ex nc AC IIC T3 / T4	274
495875	2.0/2.1	Explosion proof electrical part "nc AC", 32 mm	7.0	6.0	-40°C to +50°C	-	IP65	II 3 GD Ex nc AC IIC T3 / T4	276
496110	2.0/2.1	Explosion proof electrical part "nc AC", 32 mm	-	9.0	-40°C to +50°C	-	IP65	II 3 GD Ex nc AC IIC T3 / T4	274
495865	1.1	Explosion proof electrical part "nc AC", low power, 22 mm	2.5	2.0	-40°C to +50°C	-	IP65	II 3 GD Ex nc AC IIC T5	272
496125	6.0	Explosion proof electrical part "nc AC", low power, 32 mm	1.6	-	-40°C to +50°C	-	IP65	II 3 GD Ex nc AC IIC T5 / T6	275
492670	2.0/2.1	Explosion proof encapsulated electrical part "mb", 32 mm	9.0	8.0	-40°C to +50°C	-	IP65	II 2 GD Ex mb II T4	282
482605	1.1	Explosion proof encapsulated electrical part "mb", 32 mm	5.0	4.0	-40°C to +65°C	-	IP65	II 2 GD Ex mb II T4 / T5	281
482606	1.1	Explosion proof encapsulated electrical part "mb", low power, 32 mm	2.5	2.0	-40°C to +65°C	-	IP65	II 2 GD Ex mb II T4 / T5	281
492070	2.0/2.1	Explosion proof encapsulated electrical part "mb", with water proof metal housing, 50 mm	8.0	9.0	-40°C to +65°C	-	IP67	II 2 GD Ex mb II T4 / T5	283
HZ10	2.0/2.1	Explosion proof encapsulated electrical part "mb", double frequency	8.0	8.0	-40°C to +50°C	-	IP65	II 2 GD Ex mb II T3 / T5	284
HZ11	2.0/2.2	Explosion proof encapsulated electrical part "mb", double frequency	14.0	14	-40°C to +50°C	-	IP65	II 2 GD Ex mb II T3 / T5	285
497105	10.3	Flame proof electrical part "db", 50 mm	8.0	8.0	-50°C to +80°C	-	IP66	Ex db IIC T4 / T5 / T6	280
493640	2.0/2.1	Flame proof encapsulated electrical part "db mb", double frequency	8.0	8.0	-40°C to +75°C	-	IP65	II 2 GD Ex db mb IIC T4 / T5	290
495905	2.0/2.1	Flame proof encapsulated electrical part "db mb", 37 mm	8.0	8.0	-40°C to +65°C	-	IP67	II 2 GD Ex db mb IIC T4	287
496560	10.1	Flame proof encapsulated electrical part "db mb", 37 mm	8.0	8.0	-40°C to +65°C	-	IP67	II 2 GD Ex db mb IIC T4	288
496800	10.1	Flame proof encapsulated electrical part "db mb", 37 mm	8.0	8.0	-40°C to +65°C	-	IP67	II 2 GD Ex db mb IIC T4	289
495900	6.0	Flame proof encapsulated electrical part "db mb", low power, 37 mm	2.0	2.5	-40°C to +65°C	-	IP67	II 2 GD Ex db mb IIC T4 / T5 / T6	286
496555	10.2	Flame proof encapsulated electrical part "db mb", 37 mm	6.0	6.0	-40°C to +65°C	-	IP67	II 2 GD Ex db mb IIC T4 / T5 / T6	288
496700	10.2	Flame proof encapsulated electrical part "db mb", 37 mm	6.0	6.0	-40°C to +65°C	-	IP67	II 2 GD Ex db mb IIC T4 / T5 / T6	289
494040	2.0/2.1	Explosion proof increased safety electrical part "eb", 50 mm	8.0	8.0	-40°C to +90°C	-	IP67	II 2 GD Ex eb IIC T3 / T4	291
483371	2.0/2.1	Explosion proof increased safety electrical part "eb", 50 mm	8.0	8.0	-40°C to +65°C	-	IP67	II 2 GD Ex eb IIC T4	291
492190	2.0/2.1	Explosion proof increased safety and encapsulated elect. part "eb", 50 mm	9.0	11.0	-40°C to +75°C	-	IP66	II 2 GD Ex eb mb II T3 / T4	294
492310	10.1	Explosion proof increased safety and encapsulated electrical part "eb", 50 mm	6.0	6.0	-40°C to +75°C	-	IP66	II 2 GD Ex eb mb II T4 / T5	292
492210	9.0	Explosion proof increased safety and encapsulated electrical part "eb", " Booster", 50 mm	1.0 to 1.8	-	-40°C to +75°C	-	IP66	II 2 GD Ex eb mb II T5 / T6	293
495910	8.0	Explosion proof intrinsically safe electrical part "ia", "booster", 37 mm	0.3 to 1.2	-	-40°C to +80°C	-	IP67	II 1 GD Ex ia IIC T6 / T5 / T4	296
496565	9.0	Explosion proof intrinsically safe electrical part "ia", " Booster", 37 mm	0.77 to 2.58	-	-40°C to +80°C	-	IP67	II 1 GD Ex ia IIC T6 / T5 / T4	297
483580.01	7.0	Explosion proof intrinsically safe electrical part "ia", 32 mm	3.0	-	-40°C to +55°C	-	IP65	II 1 GD Ex ia IIC T6	295
488650.01	7.0	Explosion proof intrinsically safe electrical part "ia", 50 mm	0.3 to 3.0	-	-40°C to +65°C	-	IP66	II 1 GD Ex ia IIC T6	300
492965.01	9.0	Explosion proof intrinsically safe electrical part "ia", " Booster", 50 mm	0.3 to 2.3	-	-40°C to +65°C	-	IP66	II 1 GD Ex ia IIC T6	298
482870.01	12.0	Explosion proof intrinsically safe electrical part "ia", 50 mm	3.0	-	-40°C to +65°C	-	IP66	II 1 GD Ex ia IIC T6	299

Tel: +45 63 12 83 00 | Email: ps@hymatik.com | www.hymatik.com | Hvidkaervej 27a, DK-5250 Odense SV, Denmark

NOTES

Tel: +45 63 12 83 00 | Email: ps@hymatik.com | www.hymatik.com | Hvidkaervej 27a, DK-5250 Odense SV, Denmark

INDEX BY COIL REFERENCE

Coil Reference	Coil Group	Designation	Power DC Pn (W)	Power AC Pn (W)	Ambient Temperature	UL	Degree of Protection	ATEX or NEMA 4X Protection (Gas)	Page
481000	2.0/2.1	Coil with screw terminal, 40 mm	8.0	8.0	-40°C to +50°C	-	IP 44 to 67	-	267
481044	2.0/2.2	Coil with screw terminal High power, 40 mm	-	14.0	-40°C to +50°C	-	IP 44 to 67	-	268
481180	1.1	Coil for DIN plug connection, 22 mm	5.0	4.0	-40°C to +50°C	-	IP65	-	259
481865	2.0/2.1	Coil for DIN plug connection, 32 mm	9.0	8.0	-40°C to +50°C	-	IP65	-	254
482605	1.1	Explosion proof encapsulated electrical part "mb", 22 mm	5.0	4.0	-40°C to +65°C	-	IP65	II 2 GD Ex mb II T4 / T5	281
482606	1.1	Explosion proof encapsulated electrical part "mb", low power, 22 mm	2.5	2.0	-40°C to +65°C	-	IP65	II 2 GD Ex mb II T4 / T5	281
482730	3.0	Coil for DIN plug connection, reduced power, 32 mm	7.0	6.0	-40°C to +50°C	-	IP65	-	256
482740	6.0	Coil for DIN plug connection, low power, 32 mm	1.6	-	-40°C to +50°C	-	IP65	-	257
482870.01	12.0	Explosion proof intrinsically safe electrical part "ia", 50 mm	3.0	-	-40°C to +65°C	-	IP66	II 1 GD Ex ia IIC T6	299
483371	2.0/2.1	Explosion proof increased safety electrical part "eb", 50 mm	8.0	8.0	-40°C to +65°C	-	IP67	II 2 GD Ex eb IIC T4	291
483510	2.0/2.1	Coil for DIN plug connection, 32 mm	-	9.0	-40°C to +50°C	-	IP65	-	254
483520	2.0/2.1	Coil with screw terminal, double frequency, 40 mm	-	9.0	-40°C to +50°C	-	IP 44 to 67	-	267
483580.01	7.0	Explosion proof intrinsically safe electrical part "ia", 32 mm	3.0	-	-40°C to +55°C	-	IP65	II 1 GD Ex ia IIC T6	295
483590	1.1	Coil for DIN plug connection,double frequency, 22 mm	-	3.0	-40°C to +50°C	-	IP65	-	261
484990	4.0	Coil with screw terminal,bistable,for impulse applications, 40 mm	-	11.0	-40°C to +50°C	-	IP44	-	270
485100	2.0/2.1	Coil with screw terminal,high temperature, 40 mm	8.0	8.0	-40°C to +50°C	-	IP 44 to 67	-	269
485400	4.0	Coil with screw terminal,bistable,for impulse applications, 40 mm	13.0	-	-40°C to +50°C	-	IP44	-	270
486265	2.0/2.2	Coil with screw terminal,high temperature-high power, 40 mm	14.0	14.0	-40°C to +50°C	-	IP 44 to 67	-	269
488650.01	7.0	Explosion proof intrinsically safe electrical part "ia", 50 mm	0.3 to 3.0	-	-40°C to +65°C	-	IP66	II 1 GD Ex ia IIC T6	300
488980	1.1	Coil for DIN plug connection, low power, 22 mm	2.5	2.0	-40°C to +50°C	-	IP65	-	259
491514	2.0/2.1	Coil for DIN plug connection, 32 mm, UL class F	-	11.0	-40°C to +50°C	●	IP65	-	258
492070	2.0/2.1	Explosion proof encapsulated electrical part "mb", with water proof metal housing, 50mm	8.0	9.0	-40°C to +65°C	-	IP67	II 2 GD Ex mb II T4 / T5	283
492190	2.0/2.1	Explosion proof increased safety and encapsulated electrical part "eb", 50 mm	9.0	11.0	-40°C to +75°C	-	IP66	II 2 GD Ex eb mb II T3 / T4	294
492210	9.0	Explosion proof increased safety and encapsulated electrical part "eb", "Booster", 50 mm	1.0 to 1.8	-	-40°C to +75°C	-	IP66	II 2 GD Ex eb mb II T5 / T6	293
492310	10.1	Explosion proof increased safety and encapsulated electrical part "eb", 50 mm	6.0	6.0	-40°C to +75°C	-	IP66	II 2 GD Ex eb mb II T4 / T5	292
492425	2.0/2.2	Coil for DIN plug connection, high temperature, 32 mm	14.0	14.0	-40°C to +50°C	-	IP65	-	255
492453	2.0/2.1	Coil for DIN plug connection, high temperature, 32 mm	9.0	8.0	-40°C to +50°C	-	IP65	-	255
492670	2.0/2.1	Explosion proof encapsulated electrical part "mb", 32 mm	9.0	8.0	-40°C to +50°C	-	IP65	II 2 GD Ex mb II T4	282
492912	1.1	Coil for DIN plug connection, 22 mm, UL	4.0	3.0	-40°C to +50°C	●	IP65	-	260
492965.01	9.0	Explosion proof intrinsically safe electrical part "ia", " Booster", 50 mm	0.3 to 2.3	-	-40°C to +65°C	-	IP66	II 1 GD Ex ia IIC T6	298
493640	2.0/2.1	Flame proof encapsulated electrical part "db mb", double frequency	8.0	8.0	-40°C to +75°C	-	IP65	II 2 GD Ex db mb IIC T4	290

INDEX BY COIL REFERENCE

Coil Reference	Coil Group	Designation	Power DC Pn (W)	Power AC Pn (W)	Ambient Temperature	UL	Degree of Protection	ATEX or NEMA 4X Protection (Gas)	Page
494040	2.0/2.1	Explosion proof increased safety electrical part "eb", 50 mm	8.0	8.0	-40°C to +90°C	-	IP67	II 2 GD Ex eb IIC T3 / T4	291
495870	2.0/2.1	Explosion proof electrical part "nc AC", 32 mm	9.0	8.0	-40°C to +50°C	-	IP65	II 3 GD Ex nc AC IIC T3 / T4	274
495875	2.0/2.1	Explosion proof electrical part "nc AC", 32 mm	7.0	6.0	-40°C to +50°C	-	IP65	II 3 GD Ex nc AC IIC T3 / T4	276
495880	2.0/2.2	Explosion proof electrical part "nc AC", 32 mm	14.0	14.0	-40°C to +50°C	-	IP65	II 3 GD Ex nc AC IIC T3	277
495900	6.0	Flame proof encapsulated electrical part "db mb", low power, 37 mm	2.0	2.5	-40°C to +65°C	-	IP67	II 2 GD Ex db mb IIC T4 / T5 / T6	286
495905	2.0/2.1	Flame proof encapsulated electrical part "db mb", 37 mm	8.0	8.0	-40°C to +65°C	-	IP67	II 2 GD Ex db mb IIC T4	287
495910	8.0	Explosion proof intrinsically safe electrical part "ia", "booster", 37 mm	0.3 to 1.2	-	-40°C to +80°C	-	IP67	II 1 GD Ex ia IIC T6 / T5 / T4	296
495915	4.0	Explosion proof increased safety electrical part "nc AC", 50 mm	13.0	11.0	-40°C to +65°C	-	IP67	II 3 GD Ex nc AC IIC T3	278
496081	2.0/2.1	Coil with flying leads,IP 67, 32 mm	9.0	9.0	-40°C to +50°C		IP67	-	265
496082	2.0/2.2	Coil with flying leads, IP 67, 32 mm, UL	16.0	13.0-14.0	-40°C to +120°C	●	IP67	-	266
496110	2.0/2.1	Explosion proof electrical part "nc AC", 32 mm	-	9.0	-40°C to +50°C	-	IP65	II 3 GD Ex nc AC IIC T3 / T4	274
496125	6.0	Explosion proof electrical part "nc AC", low power, 32 mm	1.6	-	-40°C to +50°C	-	IP65	II 3 GD Ex nc AC IIC T5 / T6	275
496131	1.2	Coil for DIN plug connection, double frequency, 22 mm	3.0	3.0	-40°C to +50°C	-	IP65	-	262
496155	2.0/2.2	Explosion proof increased safety electrical part "nc AC", 50 mm	14.0	14.0	-40°C to +65°C	-	IP67	II 3 GD Ex nc AC IIC T3	279
496482	1.2	Coil for DIN plug connection, double frequency coil, 22 mm	3.0	3.0	-40°C to +50°C	-	IP65	-	263
496555	10.2	Flame proof encapsulated electrical part "db mb", 37 mm	6.0	6.0	-40°C to +65°C	-	IP67	II 2 GD Ex db mb IIC T4 / T5 / T6	288
496560	10.1	Flame proof encapsulated electrical part "db mb", 37 mm	8.0	8.0	-40°C to +65°C	-	IP67	II 2 GD Ex db mb IIC T4	288
496565	9.0	Explosion proof intrinsically safe electrical part "ia", " Booster", 37 mm	0.77 to 2.58	-	-40°C to +80°C	-	IP67	II 1 GD Ex ia IIC T6 / T5 / T4	297
496637	1.2	Explosion proof electrical part "nc AC", double frequency, 22 mm	3.0	3.0	-40°C to +50°C	-	IP65	II 3 D Ex TC IIIC T 95°C	273
496700	10.2	Flame proof encapsulated electrical part "db mb", 37 mm	6.0	6.0	-40°C to +65°C	-	IP67	II 2 G Ex db mb IIC T4 / T5 / T6	289
496800	10.1	Flame proof encapsulated electrical part "db mb", 37 mm	8.0	8.0	-40°C to +65°C	-	IP67	II 2 GD Ex db mb IIC T4	289
496895	10.1	Coil for DIN plug connection for oil and gas, 37 mm	8.0	8.0	-40°C to +50°C	-	IP65	-	264
497105	10.3	Flame proof stainless steel electrical part "db"	8.0	8.0	-50°C to +80°C	-	IP66	II 2 GD Ex db IIC T4 / T5 / T6	280
HZ10	2.0/2.1	Explosion proof encapsulated electrical part "mb", double frequency	8.0	8.0	-40°C to +50°C	-	IP65	II 2 GD Ex mb II T4 / T5	284
HZ11	2.0/2.2	Explosion proof encapsulated electrical part "mb", double frequency	14.0	14.0	-40°C to +50°C	-	IP65	II 2 GD Ex mb II T4 / T5	285

Tel: +45 63 12 83 00 | Email: ps@hymatik.com | www.hymatik.com | Hvidkaervej 27a, DK-5250 Odense SV, Denmark

INDEX BY COIL GROUP

Coil Group	Coil Reference	Designation	Power DC Pn (W)	Power AC Pn (W)	Ambient Temperature	UL	Degree of Protection	ATEX or NEMA 4X Protection (Gas)	Page
1.1	488980	Coil for DIN plug connection, low power,22 mm	2.5	2.0	-40°C to +50°C	-	IP65	-	259
1.1	492912	Coil for DIN plug connection, UL 22 mm	4.0	3.0	-40°C to +50°C	●	IP65	-	260
1.1	481180	Coil for DIN plug connection, 22 mm	5.0	4.0	-40°C to +50°C	-	IP65	-	259
1.1	483590	Coil for DIN plug connection,double frequency, 22 mm	-	3.0	-40°C to +50°C	-	IP65	-	261
1.1	482606	Explosion proof encapsulated electrical part "mb", low power, 22 mm	2.5	2.0	-40°C to +65°C	-	IP65	II 2 GD Ex mb II T4 / T5	281
1.1	482605	Explosion proof encapsulated electrical part "mb", 22 mm	5.0	4.0	-40°C to +65°C	-	IP65	II 2 GD Ex mb II T4 / T5	281
1.2	496131	Coil for DIN plug connection, double frequency, 22 mm	3.0	3.0	-40°C to +50°C	-	IP65	-	262
1.2	496482	Coil for DIN plug connection,double frequency coil, 22 mm	3.0	3.0	-40°C to +50°C	-	IP65	-	263
1.2	496637	Explosion proof electrical part "nc AC", 22 mm, double frequency	3.0	3.0	-40°C to +50°C	-	IP65	II 3 D Ex tc IIC T 95°C	273
2.0/2.1	481000	Coil with screw terminal, 40 mm	8.0	8.0	-40°C to +50°C	-	IP 44 to 67	-	267
2.0/2.1	485100	Coil with screw terminal,high temperature, 40 mm	8.0	8.0	-40°C to +50°C	-	IP 44 to 67	-	269
2.0/2.1	481865	Coil for DIN plug connection, 32 mm	9.0	8.0	-40°C to +50°C	-	IP65	-	254
2.0/2.1	492453	Coil for DIN plug connection, high temperature, 32 mm	9.0	8.0	-40°C to +50°C	-	IP65	-	255
2.0/2.1	496081	Coil with flying leads, IP 67, 32 mm	9.0	9.0	-10°C to +50°C	-	IP67	-	265
2.0/2.1	483510	Coil for DIN plug connection, 32 mm	-	9.0	-40°C to +50°C	-	IP65	-	254
2.0/2.1	483520	Coil with screw terminal, double frequency, 40 mm	-	9.0	-40°C to +50°C	-	IP 44 to 67	-	267
2.0/2.1	491514	Coil for DIN plug connection, 32 mm, UL	-	11.0	-40°C to +50°C	●	IP65	-	258
2.0/2.1	495875	Explosion proof electrical part "nc AC", 32 mm	7.0	6.0	-40°C to +50°C	-	IP65	II 3 GD Ex nc AC IIC T3 / T4	276
2.0/2.1	495870	Explosion proof electrical part "nc AC", 32 mm	9.0	8.0	-40°C to +50°C	-	IP65	II 3 GD Ex nc AC IIC T3 / T4	274
2.0/2.1	496110	Explosion proof electrical part "nc AC", 32 mm	-	9.0	-40°C to +50°C	-	IP65	II 3 GD Ex nc AC IIC T3 / T4	274
2.0/2.1	492670	Explosion proof encapsulated electrical part "mb", 32 mm	9.0	8.0	-40°C to +50°C	-	IP65	II 2 GD Ex mb II T4	282
2.0/2.1	492070	Explosion proof encapsulated electrical part "mb", with water proof metal housing, 50 mm	8.0	9.0	-40°C to +65°C	-	IP67	II 2 GD Ex mb II T4 / T5	283
2.0/2.1	493640	Flame proof encapsulated electrical part "db mb", double frequency	8.0	8.0	-40°C to +75°C	-	IP65	II 2 GD Ex db mb IIC T4	290
2.0/2.1	495905	Flame proof encapsulated electrical part "db mb", 37 mm	8.0	8.0	-40°C to +65°C	-	IP67	II 2 GD Ex db mb IIC T4	287
2.0/2.1	494040	Explosion proof increased safety electrical part "eb", 50 mm	8.0	8.0	-40°C to +90°C	-	IP67	II 2 GD Ex eb IIC T3 / T4	291
2.0/2.1	483371	Explosion proof increased safety electrical part "eb", 50 mm	8.0	8.0	-40°C to +65°C	-	IP67	II 2 GD Ex eb IIC T4	291
2.0/2.1	492190	Explosion proof increased safety and encapsulated electrical part "eb", 50 mm	9.0	11.0	-40°C to +75°C	-	IP66	II 2 GD Ex eb mb II T3 / T4	294
2.0/2.1	HZ10	Explosion proof encapsulated electrical part "mb", double frequency	8.0	8.0	-40°C to +50°C	-	IP65	II 2 GD Ex mb II T4 / T5	284
2.0/2.2	486265	Coil with screw terminal,high temperature-high power, 40 mm	14.0	14.0	-40°C to +50°C	-	IP 44 to 67	-	269
2.0/2.2	492425	Coil for DIN plug connection, high temperature, 32 mm	14.0	14.0	-40°C to +50°C	-	IP65	-	255

Tel: +45 63 12 83 00 | Email: ps@hymatik.com | www.hymatik.com | Hvidkaervej 27a, DK-5250 Odense SV, Denmark

INDEX BY COIL GROUP

Coil Group	Coil Reference	Designation	Power DC Pn (W)	Power AC Pn (W)	Ambient Temperature	UL	Degree of Protection	ATEX or NEMA 4X Protection (Gas)	Page
2.0/2.2	481044	Coil with screw terminal High power, 40 mm	-	14.0	-40°C to +50°C	-	IP 44 to 67	-	268
2.0/2.2	495880	Explosion proof electrical part "nc AC", 32 mm	14.0	14.0	-40°C to +50°C	-	IP65	II 3 GD Ex nc AC IIC T3	277
2.0/2.2	496082	Coil with flying leads,IP 67, 32 mm, UL	16.0	13.0-14.0	-40°C to +120°C	●	IP67	-	266
2.0/2.2	496155	Explosion proof increased safety electrical part "nc AC", 50 mm	14.0	14.0	-40°C to +65°C	-	IP67	II 3 GD Ex nc AC IIC T3	279
2.0/2.2	HZ11	Explosion proof encapsulated electrical part "mb", double frequency	14.0	14.0	-40°C to +50°C	-	IP65	II 2 GD Ex mb II T4 / T5	285
3.0	482730	Coil for DIN plug connection, reduced power, 32 mm	7.0	6.0	-40°C to +50°C	-	IP65	-	256
4.0	485400	Coil with screw terminal,bistable, for impulse applications, 40 mm	13.0	-	-40°C to +50°C	-	IP44	-	270
4.0	484990	Coil with screw terminal,bistable, for impulse applications, 40 mm	-	11.0	-40°C to +50°C	-	IP44	-	270
4.0	495915	Explosion proof increased safety electrical part "nc AC", 50 mm	13.0	11.0	-40°C to +65°C	-	IP67	II 3 GD Ex nc AC IIC T3	278
6.0	482740	Coil for DIN plug connection, low power, 32 mm	1.6	-	-40°C to +50°C	-	IP65	-	257
6.0	496125	Explosion proof electrical part "nc AC", low power, 32 mm	1.6	-	-40°C to +50°C	-	IP65	II 3 GD Ex nc AC IIC T5 / T6	275
6.0	495900	Flame proof encapsulated electrical part "db mb", low power, 37 mm	2.0	2.5	-40°C to +65°C	-	IP67	II 2 GD Ex db mb IIC T4 / T5 / T6	286
7.0	483580.01	Explosion proof intrinsically safe electrical part "ia", 32 mm	3.0	-	-40°C to +55°C	-	IP65	II 1 GD Ex ia IIC T6	295
7.0	488650.01	Explosion proof intrinsically safe electrical part "ia", 50 mm	0.3 to 3.0	-	-40°C to +65°C	-	IP66	II 1 GD Ex ia IIC T6	300
8.0	495910	Explosion proof intrinsically safe electrical part "ia", "booster", 37 mm	0.3 to 1.2.0	-	-40°C to +80°C	-	IP67	II 1 GD Ex ia IIC T6 / T5 / T4	296
9.0	492210	Explosion proof increased safety and encapsulated electrical part "eb", " Booster", 50 mm	1.0 to 1.8	-	-40°C to +75°C	-	IP66	II 2 GD Ex eb mb II T5 / T6	293
9.0	496565	Explosion proof intrinsically safe electrical part "ia", " Booster", 37 mm	0.77 to 2.58	-	-40°C to +80°C	-	IP67	II 1 GD Ex ia IIC T6 / T5 / T4	297
9.0	492965.01	Explosion proof intrinsically safe electrical part "ia", " Booster", 50 mm	0.3 to 2.3	-	-40°C to +65°C	-	IP66	II 1 GD Ex ia IIC T6	298
10.1	496895	Coil for DIN plug connection for oil and gas, 37 mm	8.0	8.0	-40°C to +50°C	-	IP65	-	264
10.1	496560	Flame proof encapsulated electrical part "db mb", 37 mm	8.0	8.0	-40°C to +65°C	-	IP67	II 2 GD Ex db mb IIC T4	288
10.1	496800	Flame proof encapsulated electrical part "db mb", 37 mm	8.0	8.0	-40°C to +65°C	-	IP67	II 2 GD Ex db mb IIC T4	289
10.1	492310	Explosion proof increased safety and encapsulated electrical part "eb", 50 mm	6.0	6.0	-40°C to +75°C	-	IP66	II 2 GD Ex eb mb II T4 / T5	292
10.2	496555	Flame proof encapsulated electrical part "db mb", 37 mm	6.0	6.0	-40°C to +65°C	-	IP67	II 2 GD Ex db mb IIC T4 / T5 / T6	288
10.2	496700	Flame proof encapsulated electrical part "db mb", 37 mm	6.0	6.0	-40°C to +65°C	-	IP67	II 2 GD Ex db mb IIC T4 / T5 / T6	289
10.3	497105	Flame proof electrical part "d"	8.0	8.0	-50°C to +80°C		IP66	Ex db IIC T4 / T5 / T6	280
12.0	482870.01	Explosion proof intrinsically safe electrical part "ia", 50 mm	3.0	-	-40°C to +65°C	-	IP66	II 1 GD Ex ia IIC T6	299

Tel: +45 63 12 83 00 | Email: ps@hymatik.com | www.hymatik.com | Hvidkaervej 27a, DK-5250 Odense SV, Denmark

INDEX FOR VALVES

	Valve Reference	Page
U	033X0111	112
U	033X5156	112
U	033X5195	114
U	033X5256	114
U	033X77591	114
A	03R*24**-L	120
A	03R*24**-R	120
E	121K03	36
E	121K0302	36
	121K0397	36
E	121K04	36
E	121K0402	36
U	121K0490	36
	121K0497	36
U	121K0690	36
	121V5306	40
	121V5397	40
	121V5406	40
	121V5497	40
U	121V5595	42
U	121V7595	42
U	121VS3750A	42
U	121VS3750A	42
	131B04	124
	131B14	124
E	131E03	52
E	131F26	84
E	131F43	74
	131F4310	74
E	131F4350	74
	131F4397	74
E	131F44	72
	131F4410	72
E	131F4450	72
	131F4490	72
	131F4497	72
	131F46	72
	131F4650	72
U	131F5295	82
	131F5406	80
U	131F5695	80
U	131F7695	82
E	131K03	52
E	131K0308	52
E	131K0350	52
E	131K0358	52
	131K0397	52
E	131K04	48
E	131K0450	48
	131K0490	48
	131K0497	48
E	131K06	50
	131K0608	50
E	131K0650	52
E	131K13	46
E	131K14	46
	131K16	46
	131K1650	46
E	131K63	52
E	131K6350	52
E	131K64	48
E	131K6450	48
	131T21	64
	131T2101	64
	131T22	64
	131T23	64
	131T2301	64
	131T29	64
	131T2901	64
	131V5306	92
	131V5363	92
	131V5397	92
	131V5406	90
	131V5463	90
	131V5490	90
	131V5497	90
	131X1101	188
U	131X1101	188
	131X1131	188
U	131X1201	186
	132F43	76
	132F4301	76
	132F44	76
	132F46	76
	132K03	54
	132K04	54
	132K06	54
	132T22	66
	132T23	66
	132T2301	66
	132T29	66
E	133F43	78
E	133F44	78
E	133F4450	78
	133F46	78
	133F4650	78
E	133K03	58
E	133K0350	58
E	133K04	58
E	133K0450	58
	133K0497	58
E	133K05	58
E	133K06	58
E	133K0650	58
E	133K13	56
E	133K14	56
E	133K16	56
	133T21	68
	133T2101	68
	133T23	68
	133T2301	68
	133T2301	68
	133V5306	94
	133V5363	94
	133V5406	94
	133V5463	94
U	133V5595	88
U	133V5695	88
U	133V7595	88
U	133V7695	88
	133X01	108
U	133X01	108
U	133X0111	98
U	133X5156	100
U	133X5195	106
U	133X5196	100
U	133X5296	102
U	133X7709	102
U	133X7759	102
	135K03	60
	135K04	60
E	331B01	140
	331B02	138
E	331B21	142
E	331B74	136
	331B7490	136
U	331BS9369	180
	331N03	192
	331N04	192
	331N0402	192
	331N34	194
	331N3402	194
U	331X2309	182
E	332B01	144

INDEX FOR VALVES

	Valve Reference	Page
	332B02	144
E	332B21	146
E	341B01	140
	341B02	138
E	341B21	142
	341B34	134
	341B3403	134
	341B3440	136
	341B3490	134
	341F34	130
	341F3403	130
	341F3440	130
	341L9504	216
	341L9534	216
	341L9594	216
	341L9597	218
	341L9598	218
	341N01	228
	341N02	226
U	341N0250	224
	341N03	202
	341N04	202
	341N05	198
	341N0502	198
	341N11	228
	341N12	226
	341N21	228
	341N2190	230
	341N22	226
	341N31	230
	341N3102	230
	341N3108	230
	341N3128	230
	341N3130	230
	341N3190	232
	341N3196	232

	Valve Reference	Page
	341N3197	232
	341N32	226
	341N3202	226
U	341N3250	222
	341N3290	234
U	341N3292	222
U	341N3295	222
	341N3296	234
	341N3297	234
	341N34	202
	341N35	200
	341N3502	200
	341N3590	200
	341P01	166
	341P02	170
U	341P0250	162
	341P03	152
	341P04	154
	341P21	166
	341P2108	166
	341P2190	168
	341P2197	168
	341P22	170
	341P2290	170
	341P2297	170
U	341P3250	162
U	341P3295	162
	341P33	152
	341P34	154
	342N03	210
	342N11	244
	342N3197	244
	342N33	210
	343N03	212
	345B04	148
	345B24	148

	Valve Reference	Page
	345B34	148
	345F34	130
	345N31	236
	345P21	172
	347N03	204
	347N04	206
	347N11	242
	347N12	240
	347N31	242
	347N3190	242
	347N3196	242
	347N3197	242
	347N32	240
U	347N3250	238
	347N33	204
	347N34	206
	347P01	172
	347P02	176
	347P03	156
	347P04	158
	347P21	172
	347P2190	174
	347P2197	174
	347P22	176
U	347P3250	164
U	347P3295	164
	347P33	156
	347P34	158
	421F35	128
U	441P3250	162
	531N03	196
	531N04	196
	541N01	236
	541N0108	236
	541N03	208
	541N04	208

NOTES

Tel: +45 63 12 83 00 | Email: ps@hymatik.com | www.hymatik.com | Hvidkaervej 27a, DK-5250 Odense SV, Denmark

NOTES

WARNING - USER RESPONSIBILITY

FAILURE OR IMPROPER SELECTION OR IMPROPER USE OF THE PRODUCTS DESCRIBED HEREIN OR RELATED ITEMS CAN CAUSE DEATH, PERSONAL INJURY AND PROPERTY DAMAGE.

- This document and other information from Parker-Hannifin Corporation, its subsidiaries and authorized distributors provide product or system options for further investigation by users having technical expertise.
- The user, through its own analysis and testing, is solely responsible for making the final selection of the system and components and assuring that all performance, endurance, maintenance, safety and warning requirements of the application are met. The user must analyze all aspects of the application, follow applicable industry standards, and follow the information concerning the product in the current product catalog and in any other materials provided from Parker or its subsidiaries or authorized distributors.
- To the extent that Parker or its subsidiaries or authorized distributors provide component or system options based upon data or specifications provided by the user, the user is responsible for determining that such data and specifications are suitable and sufficient for all applications and reasonably foreseeable uses of the components or systems.

Tel: +45 63 12 83 00 | Email: ps@hymatik.com | www.hymatik.com | Hvidkaervej 27a, DK-5250 Odense SV, Denmark

Parker's Motion & Control Technologies

At Parker, we're guided by a relentless drive to help our customers become more productive and achieve higher levels of profitability by engineering the best systems for their requirements.
It means looking at customer applications from many angles to find new ways to create value.
Whatever the motion and control technology need, Parker has the experience, breadth of product and global reach to consistently deliver.
No company knows more about motion and control technology than Parker.

For further info call
00800 27 27 5374



Aerospace

Key Markets

- Aftermarket services
- Commercial transports
- Engines
- General & business aviation
- Helicopters
- Launch vehicles
- Military aircraft
- Missiles
- Power generation
- Regional transports
- Unmanned aerial vehicles

Key Products

- Control systems & actuation products
- Engine systems & components
- Fluid conveyance systems & components
- Fluid metering, delivery & atomization devices
- Fuel systems & components
- Fuel tank inerting systems
- Hydraulic systems & components
- Thermal management
- Wheels & brakes



Climate Control

Key Markets

- Agriculture
- Air conditioning
- Construction Machinery
- Food & beverage
- Industrial machinery
- Life sciences
- Oil & gas
- Precision cooling
- Process
- Refrigeration
- Transportation

Key Products

- Accumulators
- Advanced actuators
- CO_2 controls
- Electronic controllers
- Filter driers
- Hand shut-off valves
- Heat exchangers
- Hose & fittings
- Pressure regulating valves
- Refrigerant distributors
- Safety relief valves
- Smart pumps
- Solenoid valves
- Thermostatic expansion valves



Hydraulics

Key Markets

- Aerial lift
- Agriculture
- Alternative energy
- Construction machinery
- Forestry
- Industrial machinery
- Machine tools
- Marine
- Material handling
- Mining
- Oil & gas
- Power generation
- Refuse vehicles
- Renewable energy
- Truck hydraulics
- Turf equipment

Key Products

- Accumulators
- Cartridge valves
- Electrohydraulic actuators
- Human machine interfaces
- Hybrid drives
- Hydraulic cylinders
- Hydraulic motors & pumps
- Hydraulic systems
- Hydraulic valves & controls
- Hydrostatic steering
- Integrated hydraulic circuits
- Power take-offs
- Power units
- Rotary actuators
- Sensors



Pneumatics

Key Markets

- Aerospace
- Conveyor & material handling
- Factory automation
- Life science & medical
- Machine tools
- Packaging machinery
- Transportation & automotive

Key Products

- Air preparation
- Brass fittings & valves
- Manifolds
- Pneumatic accessories
- Pneumatic actuators & grippers
- Pneumatic valves & controls
- Quick disconnects
- Rotary actuators
- Rubber & thermoplastic hose & couplings
- Structural extrusions
- Thermoplastic tubing & fittings
- Vacuum generators, cups & sensors



Electromechanical

Key Markets

- Aerospace
- Factory automation
- Life science & medical
- Machine tools
- Packaging machinery
- Paper machinery
- Plastics machinery & converting
- Primary metals
- Semiconductor & electronics
- Textile
- Wire & cable

Key Products

- AC/DC drives & systems
- Electric actuators, gantry robots & slides
- Electrohydrostatic actuation systems
- Electromechanical actuation systems
- Human machine interface
- Linear motors
- Stepper motors, servo motors, drives & controls
- Structural extrusions



Filtration

Key Markets

- Aerospace
- Food & beverage
- Industrial plant & equipment
- Life sciences
- Marine
- Mobile equipment
- Oil & gas
- Power generation & renewable energy
- Process
- Transportation
- Water Purification

Key Products

- Analytical gas generators
- Compressed air filters & dryers
- Engine air, coolant, fuel & oil filtration systems
- Fluid condition monitoring systems
- Hydraulic & lubrication filters
- Hydrogen, nitrogen & zero air generators
- Instrumentation filters
- Membrane & fiber filters
- Microfiltration
- Sterile air filtration
- Water desalination & purification filters & systems



Fluid & Gas Handling

Key Markets

- Aerial lift
- Agriculture
- Bulk chemical handling
- Construction machinery
- Food & beverage
- Fuel & gas delivery
- Industrial machinery
- Life sciences
- Marine
- Mining
- Mobile
- Oil & gas
- Renewable energy
- Transportation

Key Products

- Check valves
- Connectors for low pressure fluid conveyance
- Deep sea umbilicals
- Diagnostic equipment
- Hose couplings
- Industrial hose
- Mooring systems & power cables
- PTFE hose & tubing
- Quick couplings
- Rubber & thermoplastic hose
- Tube fittings & adapters
- Tubing & plastic fittings



Process Control

Key Markets

- Alternative fuels
- Biopharmaceuticals
- Chemical & refining
- Food & beverage
- Marine & shipbuilding
- Medical & dental
- Microelectronics
- Nuclear Power
- Offshore oil exploration
- Oil & gas
- Pharmaceuticals
- Power generation
- Pulp & paper
- Steel
- Water/wastewater

Key Products

- Analytical Instruments
- Analytical sample conditioning products & systems
- Chemical injection fittings & valves
- Fluoropolymer chemical delivery fittings, valves & pumps
- High purity gas delivery fittings, valves, regulators & digital flow controllers
- Industrial mass flow meters/controllers
- Permanent no-weld tube fittings
- Precision industrial regulators & flow controllers
- Process control double block & bleeds
- Process control fittings, valves, regulators & manifold valves



Sealing & Shielding

Key Markets

- Aerospace
- Chemical processing
- Consumer
- Fluid power
- General industrial
- Information technology
- Life sciences
- Microelectronics
- Military
- Oil & gas
- Power generation
- Renewable energy
- Telecommunications
- Transportation

Key Products

- Dynamic seals
- Elastomeric o-rings
- Electro-medical instrument design & assembly
- EMI shielding
- Extruded & precision-cut, fabricated elastomeric seals
- High temperature metal seals
- Homogeneous & inserted elastomeric shapes
- Medical device fabrication & assembly
- Metal & plastic retained composite seals
- Shielded optical windows
- Silicone tubing & extrusions
- Thermal management
- Vibration dampening

ENGINEERING **YOUR** SUCCESS.

Tel: +45 63 12 83 00 | Email: ps@hymatik.com | www.hymatik.com | Hvidkaervej 27a, DK-5250 Odense SV, Denmark

Parker Worldwide

Europe, Middle East, Africa

AE – United Arab Emirates, Dubai
Tel: +971 4 8127100
parker.me@parker.com

AT – Austria, St. Florian
Tel: +43 (0)7224 66201
parker.austria@parker.com

AZ – Azerbaijan, Baku
Tel: +994 50 2233 458
parker.azerbaijan@parker.com

BE/NL/LU – Benelux, Hendrik Ido Ambacht
Tel: +31 (0)541 585 000
parker.nl@parker.com

BG – Bulgaria, Sofia
Tel: +359 2 980 1344
parker.bulgaria@parker.com

BY – Belarus, Minsk
Tel: +48 (0)22 573 24 00
parker.poland@parker.com

CH – Switzerland, Etoy
Tel: +41 (0)21 821 87 00
parker.switzerland@parker.com

CZ – Czech Republic, Klecany
Tel: +420 284 083 111
parker.czechrepublic@parker.com

DE – Germany, Kaarst
Tel: +49 (0)2131 4016 0
parker.germany@parker.com

DK – Denmark, Ballerup
Tel: +45 43 56 04 00
parker.denmark@parker.com

ES – Spain, Madrid
Tel: +34 902 330 001
parker.spain@parker.com

FI – Finland, Vantaa
Tel: +358 (0)20 753 2500
parker.finland@parker.com

FR – France, Contamine s/Arve
Tel: +33 (0)4 50 25 80 25
parker.france@parker.com

GR – Greece, Piraeus
Tel: +30 210 933 6450
parker.greece@parker.com

HU – Hungary, Budaörs
Tel: +36 23 885 470
parker.hungary@parker.com

IE – Ireland, Dublin
Tel: +353 (0)1 466 6370
parker.ireland@parker.com

IL – Israel
Tel: +39 02 45 19 21
parker.israel@parker.com

IT – Italy, Corsico (MI)
Tel: +39 02 45 19 21
parker.italy@parker.com

KZ – Kazakhstan, Almaty
Tel: +7 7273 561 000
parker.easteurope@parker.com

NO – Norway, Asker
Tel: +47 66 75 34 00
parker.norway@parker.com

PL – Poland, Warsaw
Tel: +48 (0)22 573 24 00
parker.poland@parker.com

PT – Portugal
Tel: +351 22 999 7360
parker.portugal@parker.com

RO – Romania, Bucharest
Tel: +40 21 252 1382
parker.romania@parker.com

RU – Russia, Moscow
Tel: +7 495 645-2156
parker.russia@parker.com

SE – Sweden, Borås
Tel: +46 (0)8 59 79 50 00
parker.sweden@parker.com

SK – Slovakia, Banská Bystrica
Tel: +421 484 162 252
parker.slovakia@parker.com

SL – Slovenia, Novo Mesto
Tel: +386 7 337 6650
parker.slovenia@parker.com

TR – Turkey, Istanbul
Tel: +90 216 4997081
parker.turkey@parker.com

UA – Ukraine, Kiev
Tel: +48 (0)22 573 24 00
parker.poland@parker.com

UK – United Kingdom, Warwick
Tel: +44 (0)1926 317 878
parker.uk@parker.com

ZA – South Africa, Kempton Park
Tel: +27 (0)11 961 0700
parker.southafrica@parker.com

North America

CA – Canada, Milton, Ontario
Tel: +1 905 693 3000

US – USA, Cleveland
Tel: +1 216 896 3000

Asia Pacific

AU – Australia, Castle Hill
Tel: +61 (0)2-9634 7777

CN – China, Shanghai
Tel: +86 21 2899 5000

HK – Hong Kong
Tel: +852 2428 8008

IN – India, Mumbai
Tel: +91 22 6513 7081-85

JP – Japan, Tokyo
Tel: +81 (0)3 6408 3901

KR – South Korea, Seoul
Tel: +82 2 559 0400

MY – Malaysia, Shah Alam
Tel: +60 3 7849 0800

NZ – New Zealand, Mt Wellington
Tel: +64 9 574 1744

SG – Singapore
Tel: +65 6887 6300

TH – Thailand, Bangkok
Tel: +662 186 7000

TW – Taiwan, Taipei
Tel: +886 2 2298 8987

South America

AR – Argentina, Buenos Aires
Tel: +54 3327 44 4129

BR – Brazil, Sao Jose dos Campos
Tel: +55 800 727 5374

CL – Chile, Santiago
Tel: +56 2 623 1216

MX – Mexico, Toluca
Tel: +52 72 2275 4200

© 2020 Parker Hannifin Corporation. All rights reserved.

Process Catalogue FCSE/1121/UK 01/2020

EMEA Product Information Centre
Free phone: 00 800 27 27 5374
(from AT, BE, CH, CZ, DE, DK, EE, ES, FI, FR, IE, IL, IS, IT, LU, MT, NL, NO, PL, PT, RU, SE, SK, UK, ZA)

US Product Information Centre
Toll-free number: 1-800-27 27 537

www.parker.com

Your local authorized Parker distributor