









X Series Solenoid Valves

Low Temperature Range



ENGINEERING YOUR SUCCESS.

Tel: +45 63 12 83 00 | Email: ps@hymatik.com | www.hymatik.com | Hvidkaervej 27a, DK-5250 Odense SV, Denmark

Introduction

Parker Fluid Control Solutions Europe has introduced an upgrade to it X Series range of solenoid valves in order to support the new challenges of the oil and gas industry.

Parker's existing X Series solenoid valve range for actuator control applications in upstream & CPR is upgraded to achieve -40°C ambient temperature and full material traceability.

The X Series unique design advantage is based on coil modularity: coils can in fact be removed from the pressure vessels. Such an option offers a key advantage when cabling, installing or replacing a valve or a coil is required. In case of failures, it minimizes cost of parts to be replaced (only pressure vessel or coils requiring service would be replaced).

For maintenance purposes, since different pressure vessels could share the same coil, entire operation sites could be maintained with few spares. Such advantage also provides improvement in reactiveness and service to customers. By stocking pressure vessels or coils separately having different voltage and ATEX requirements, our dealers would be able to configure a product based on customer demand.

By achieving the low temperature and material traceability features, in addition to the ease of configuration given by modularity (coils can be dismounted for any purpose including installation, maintenance, cabling), the X Series becomes the most flexible, reliable and easy to use product solution for valve actuation in the oil and gas industry.

Applications

- Pneumatic actuator control for the oil and gas
- Fail-safe function of main ON/OFF or modulating valves

Benefits

- Extensive range of ATEX and IECEx certified coils fully complying to stated EN and IEC standards
- A completely traceable manufacturing programme and 30 years field proven technology in the oil and gas industry
- Complete range of corrosion resistant valves together with cutting edge low temperature valves technology
- Product flexibility
- Low temperature resistant in extreme and harsh conditions

Tel: +45 63 12 83 00 | Email: ps@hymatik.com | www.hymatik.com | Hvidkaervej 27a, DK-5250 Odense SV, Denmark

Technical Data

Common features:
Poppet design, VMQ seat discs

Safe body working pressure:
10500 kPa /105 bar

Valve mounting:
direct pipe mounting

Mouting position:
Indifferent

Body material:
316L Stainless steel

Valve trim (gasket) material:
VMQ

Seat discs material:
polyamid-imid (valves X)

Medium:
Instrument or industrial air, dry or lubricated

Filtration:
50µm or better is recommended

Manual Reset function:
These valves close when the electrical signal fails. When the electrical signal comes back, the valve remains closed, it has to be reset manually.
If the coil is not energized, the valve can be opened by actuating the manual reset button (as for the manual override function), but the valve remains open **only** when the coil is energized while the reset button has been pushed.

X valves range:

ON/OFF, Mix & distrib. function, 3/2 solenoid valves, Direct operated, Universal
U133X7759*
U133X7709

Nominal diameter:	6.0 mm
Flow Qn:	680 NL/min. (Cv 0.63)
ΔP max.:	1200 kPa (12 bar)
Body Connection:	1/4 NPTF

DIN V 19251 AK7 certified valves, integrable in complete SIL 2 & 3 safety loops (IEC 61508).

ON/OFF, Mix & distrib. function, 3/2 Universal valves with manual reset
U033X7759

Nominal diameter:	6.0mm
Flow Qn: min.	680 NL/ (Cv 0.63)
ΔP max.:	1200 kPa (12 bar)
Body Connection:	1/4 NPTF

DIN V 19251 AK7 certified valves, integrable in complete SIL 2 safety loops (IEC 61508).

* Valve with Manual Override function

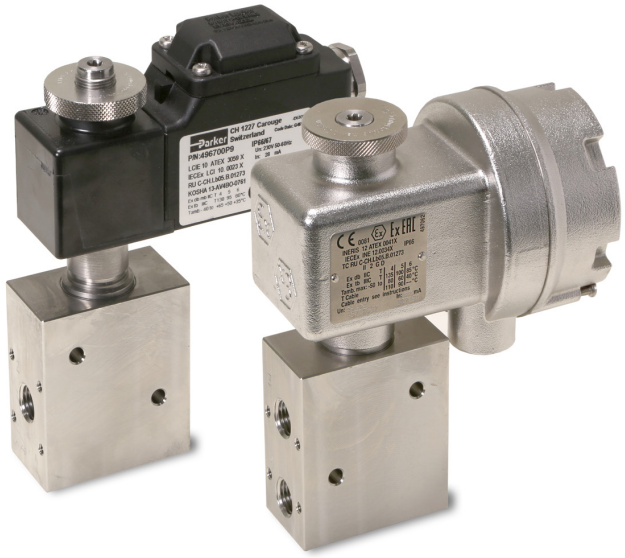

Tel: +45 63 12 83 00 | Email: ps@hymatik.com | www.hymatik.com | Hvidkaervej 27a, DK-5250 Odense SV, Denmark

Technical Specifications

316L STAINLESS ST.
PIPE MOUNTING
UNIVERSAL

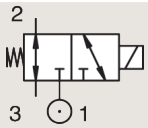

Port size	Orifice Ø	Flow factor	Operating Pressure Differential			Fluid Temp.		Seat Seal	Valve Ref.	Parker Valves		ATEX Zone	Protection Mode	Power		Coil Group	Dwg. No.
			Min	Max(MOPD)		Min	Max			Housing Ref.	Coil Ref.			AC W	DC W		
NPT	mm	Qn l/min	bar	AC bar	DC bar	°C	°C										
1/4"	6	680	0	12	12	-40	65	VMQ	U133X7759$_{1-2}$	-	496895	-	-	8	8	9.0; 10.1; 10.2; 10.3	8544
	6	680	0	-	12	-40	65	VMQ	U133X7759$_{1-2}$	-	496565	0-20	Ex ia IIB/IIC T4 to T6	-	0.3	9.0; 10.1; 10.2; 10.3	8539
	6	680	0	12	12	-40	65	VMQ	U133X7759$_{1-2}$	-	497105	1-21	Ex db IIC T4 to T6	8	8	9.0; 10.1; 10.2; 10.3	8537
	6	680	0	12	12	-40	65	VMQ	U133X7759$_{1-2}$	-	496700	1-21	Ex db mb IIC T4 to T6	6	6	9.0; 10.1; 10.2; 10.3	8545
	6	680	0	12	12	-40	65	VMQ	U133X7759$_{1-2}$	-	492310	1-21	Ex mb II T4 to T5	9	8	9.0; 10.1; 10.2; 10.3	8546
	6	680	0	-	12	-40	65	VMQ	U133X7759$_{1-2}$	-	492210	1-21	Ex eb mb IIC T5 to T6	-	1.8	9.0; 10.1; 10.2; 10.3	8546
	6	680	0	12	12	-40	65	VMQ	U133X7709$_{1}$	-	496895	-	-	8	8	9.0; 10.1; 10.2; 10.3	8551
	6	680	0	-	12	-40	65	VMQ	U133X7709$_{1}$	-	496565	0-20	Ex ia IIB/IIC T4 to T6	-	0.3	9.0; 10.1; 10.2; 10.3	8550
	6	680	0	12	12	-40	65	VMQ	U133X7709$_{1}$	-	497105	1-21	Ex db IIC T4 to T6	8	8	9.0; 10.1; 10.2; 10.3	8538
	6	680	0	12	12	-40	65	VMQ	U133X7709$_{1}$	-	496700	1-21	Ex db mb IIC T4 to T6	6	6	9.0; 10.1; 10.2; 10.3	8549
	6	680	0	12	12	-40	65	VMQ	U133X7709$_{1}$	-	492310	1-21	Ex mb II T4 to T5	9	8	9.0; 10.1; 10.2; 10.3	8548
	6	680	0	-	12	-40	65	VMQ	U133X7709$_{1}$	-	492210	1-21	Ex eb mb IIC T5 to T6	-	1.8	9.0; 10.1; 10.2; 10.3	8548

Note:
1. Valve delivered with an individual material traceability certificate (3.1 following EN10204)
2. With manual override

316L STAINLESS ST.
PIPE MOUNTING
UNIVERSAL - MANUAL RESET

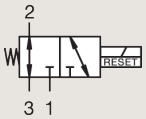

Port size	Orifice Ø	Flow factor	Operating Pressure Differential			Fluid Temp.		Seat Seal	Valve Ref.	Parker Valves		ATEX Zone	Protection Mode	Power		Coil Group	Dwg. No.
			Min	Max(MOPD)		Min	Max			Housing Ref.	Coil Ref.			AC W	DC W		
NPT	mm	Qn l/min	bar	AC bar	DC bar	°C	°C										
1/4"	6	680	0	12	12	-40	65	VMQ	U033X7759$_{1}$	-	496895	-	-	8	8	9.0; 10.1; 10.2; 10.3	8544
	6	680	0	12	12	-40	65	VMQ	U033X7759$_{1}$	-	497105	1-21	Ex db IIC T4 to T6	8	8	9.0; 10.1; 10.2; 10.3	8537
	6	680	0	12	12	-40	65	VMQ	U033X7759$_{1}$	-	496700	1-21	Ex db mb IIC T4 to T6	6	6	9.0; 10.1; 10.2; 10.3	8545
	6	680	0	12	12	-40	65	VMQ	U033X7759$_{1}$	-	492310	1-21	Ex mb II T4 to T5	9	8	9.0; 10.1; 10.2; 10.3	8546

Note:
1. Valve delivered with an individual material traceability certificate (3.1 following EN10204)

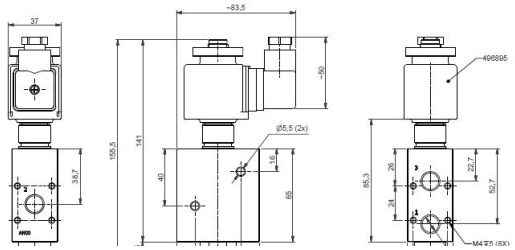

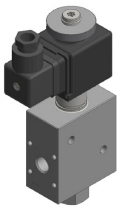

Dwg Number: 8544

Tel: +45 63 12 83 00 | Email: ps@hymatik.com | www.hymatik.com | Hvidkaervej 27a, DK-5250 Odense SV, Denmark

Technical Drawings

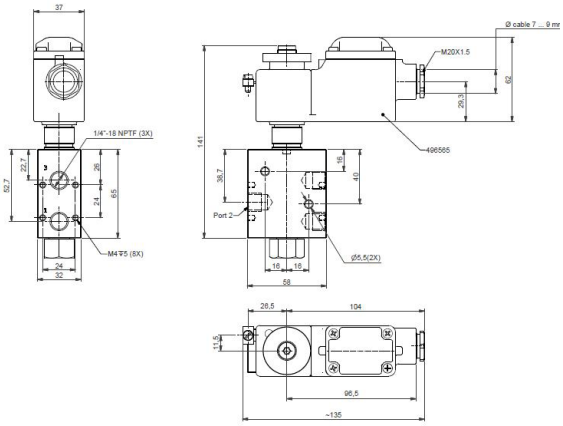

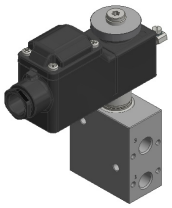

Dwg Number: 8539

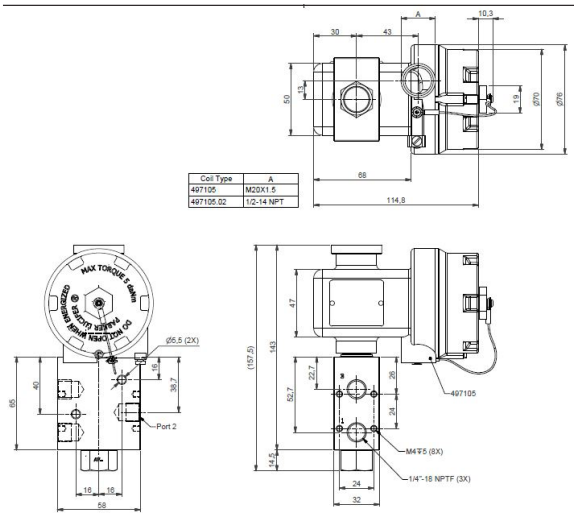

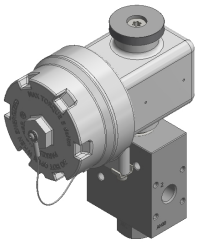

Dwg Number: 8537

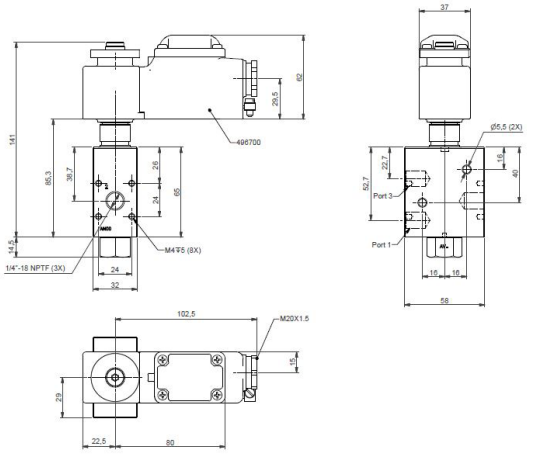

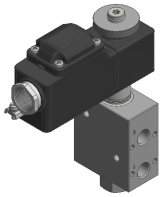

Dwg Number: 8545

Tel: +45 63 12 83 00 | Email: ps@hymatik.com | www.hymatik.com | Hvidkaervej 27a, DK-5250 Odense SV, Denmark

Technical Drawings

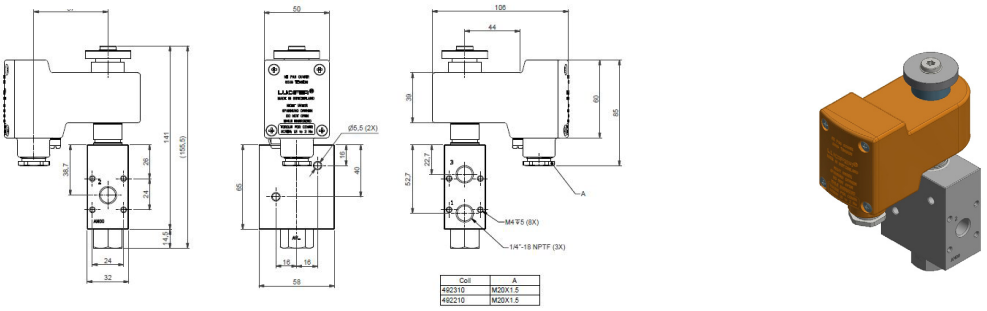

Dwg Number: 8546

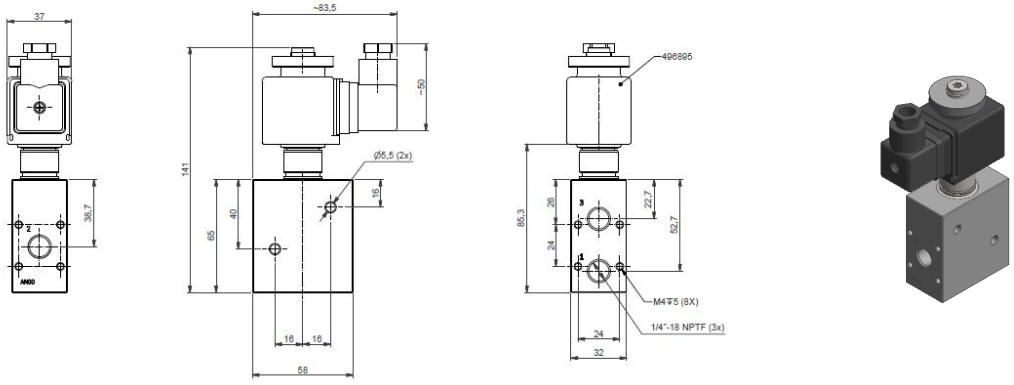

Dwg Number: 8551

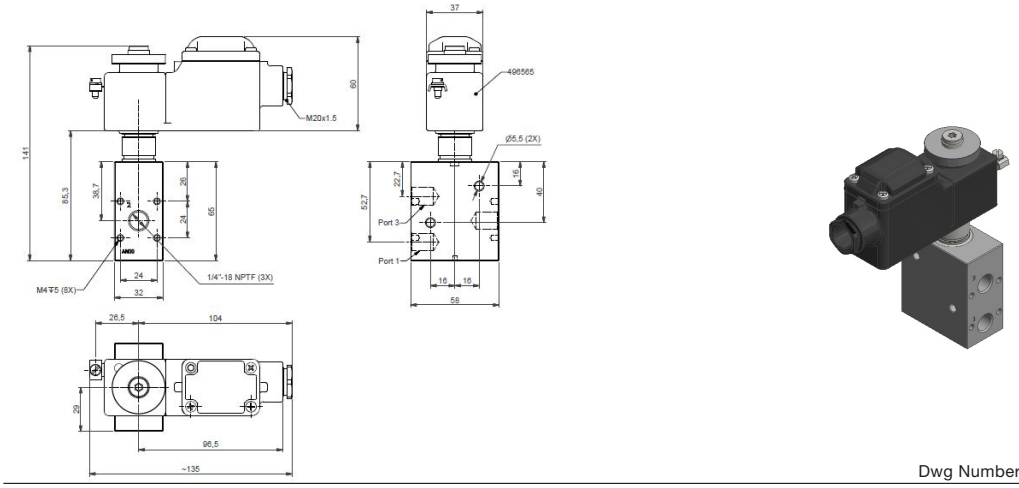

Dwg Number: 8550

Tel: +45 63 12 83 00 | Email: ps@hymatik.com | www.hymatik.com | Hvidkaervej 27a, DK-5250 Odense SV, Denmark

Technical Drawings

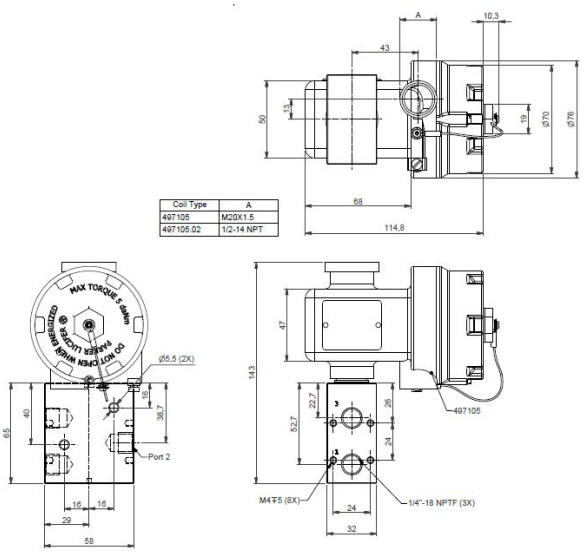

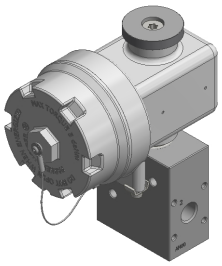

Dwg Number: 8538

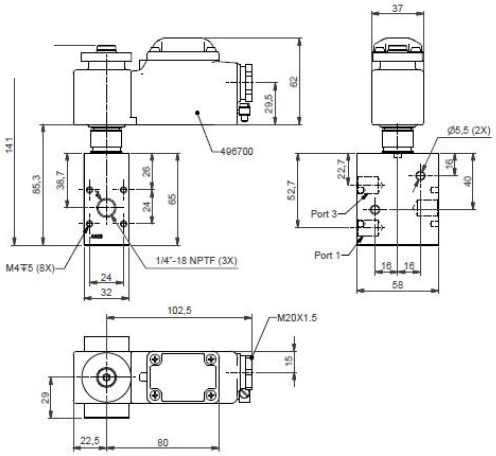

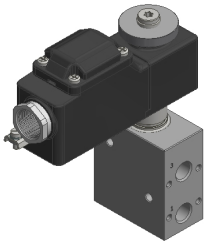

Dwg Number: 8549

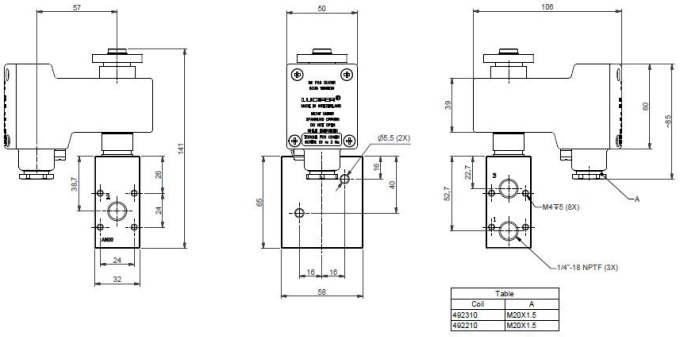

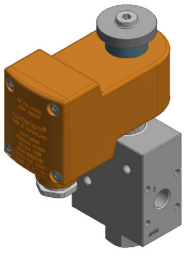

Dwg Number: 8548

Tel: +45 63 12 83 00 | Email: ps@hymatik.com | www.hymatik.com | Hvidkaervej 27a, DK-5250 Odense SV, Denmark

X Series - Coil Availability

COIL FOR OIL AND GAS 37 mm

This coil can be mounted with every Parker solenoid valves corresponding to the specified Coil Group.
See column "Coil Group" within valve pages.



This is an encapsulated assembly comprising a coil, integral magnetic iron path and snap-on plug connection.
The synthetic material encapsulation provides an effective compact housing, offering full protection against dust, oil, water, etc.

Ease of mounting in confined space - offers shock and corrosion protection - simplifies conversion of existing equipment to other requirements, etc.

Coils conform to the IEC/CENELEC safety standards and complies with European low-voltage directive. DIN plug connector included (The AC electrical connection is delivered with a rectifier bridge).

Specification			Coil for Oil and Gas			
Reference (with DIN plug)			496895			
Coil group			10.1			
Degree of protection			IP65 according to IEC / EN 60529 standards			
Class of insulation			H 180°C			
Electrical connection			With DIN plug 492459 (AC) or 486586 (DC)			
Ambient temperature			-40°C to +50°C The application is limited also by the temperature range of the valve.			
Elect. Power	DC	Pn (hot)	8 W			
		P (cold) 20°C	-			
	AC	Pn (holding)	8 W			
		Attraction cold	-			
Weight			273 g			
Voltages "Un"			VAC/Hz	Code	VDC	Code
-10% to +10% of the Un			230/50-60 24/50-60	P9 P0	24 48 110	C2 C4 C5

To Order a Coil choose Coil Ref + Voltage Code, example: **496895** for **24 VDC** = **496895C2**
More voltage possibilities can be found in the table of voltage codes at the end of the coil section.
The fixing nut (housing kit) is already inclued in the coil kit.

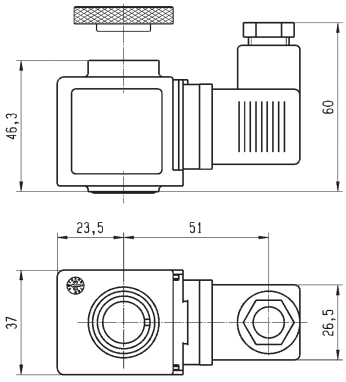

Tel: +45 63 12 83 00 | Email: ps@hymatik.com | www.hymatik.com | Hvidkaervej 27a, DK-5250 Odense SV, Denmark

X Series - Coil Availability

FLAMEPROOF
ELECTRICAL PARTS
"**db**"

ZONE 1/21

497105 & 497105.02 - ELECTRICAL PARTS



These coils can be mounted with every Parker ATEX solenoid valves corresponding to the specified Coil Group.
See column "Coil Group" within valve pages.

Application: Control of solenoid valves in dangerous areas where explosion-proof protection Ex db IIC T4 / T5 / T6 is required.

Benefits: Rotatable 360°, stainless steel with internal and external screw terminals for earth connection.

Small size for ease of mounting in confined space. Simplifies conversion of existing equipement to hazardous area requirements.

Reference			497105 (M20x1.5) 497105.02 (NPT 1/2")			
Certificate			INERIS 12ATEX0041X - IECEx INE 12.0034X			
Coil Group			10.3			
Type of protection		Gas	II 2 G - Ex db IIC T4 / T5 / T6			
		Dust	II 2 D - Ex tb IIIC - 130°C / 95°C / 80°C			
Degree of protection			**IP66** (with relevant cable gland) according to IEC/EN 60529 Standards			
Ambient temperature			-50°C to +80°C / +60°C / +40°C The operating temperature of the valve/coil can be limited by that of the valve			
Insulation Class			H 180°C			
Electrical connection			Electric connection is done in the connection chamber on an easily accessible connector terminals. The cable entry to the connection chamber is made through a 1/2" NPT or M20x1.5 thread in which an approved Exdb IIC cable gland must be installed.			
Electrical consumption	DC	**Pn** (hot)	8 W			
		P (cold) 20°C	9 W			
	AC	**Pn** (holding)	8 W			
		Attraction cold	9 W			
Voltage Tolerance			+/- 10% of nominal voltage			
Emergising Cuty			ED 100%			
Voltages			**VAC/Hz**	**Code**	**VDC**	**Code**
			24/50-60 110-115 / 50-60 220-230 / 50-60	P0 1P 3P	12 24 48 110	C1 C2 C4 C5

To Order a Coil choose Coil Ref + Voltage Code, example: **497105** for **24 VDC** = **497105C2**

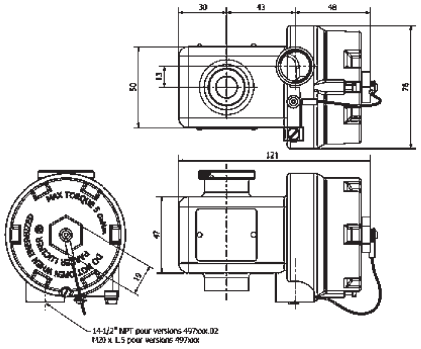

Tel: +45 63 12 83 00 | Email: ps@hymatik.com | www.hymatik.com | Hvidkaervej 27a, DK-5250 Odense SV, Denmark

X Series - Coil Availability

IECEx certified

FLAME PROOF ENCAPSULATED ELECTRICAL PARTS "db mb"

496700 & 496800 - ELECTRICAL PARTS 37 mm

ZONE 1/21

These coils can be mounted with every Parker ATEX solenoid valves corresponding to the specified Coil Group.
See column "Coil Group" within valve pages.

Application: Control of solenoid valves in dangerous areas where explosion-proof protection Ex db mb IIC T4 to T6 is required.

Benefits: Rotatable 360° fibreglass-reinforced plastic housing (class H). Solenoid coil, rectifier (silicium diodes), fuses and varistor protection are completely encapsulated into the coil housing by epoxy resin for shock and corrosion protection.

The plastic housing is delivered with 1/2" NPT or M20 x 1.5 threaded hole for wide range of cable glands. Small size for ease of mounting in confined space.



Reference			496700 or 49670002 (NPT)		496800 or 49680002 (NPT)	
Certificate			LCIE 10 ATEX 3059 X - IECEx LCI 10.0023X			
Coil Group			10.2		10.1	
Type of protection		Gas	II 2 G - Ex db mb IIC T4 / T5 / T6		II 2 G - Ex db mb IIC T4	
		Dust	II 2 D - Ex tb IIIC - T130 / 95 / 80°C		II 2 D - Ex tb IIIC - T130°C	
Degree of protection			**IP67** according to IEC/EN 60529 Standards			
Ambiant temperature			-40°C to +35°C / +50°C / +65°C The application is limited also by the temperature range of the valve.		-40°C to +65°C	
Class of insulation			H (180°)			
Electrical connection			Electric connection is done in the connection box passes through a 1/2 NPT or M20x1.5 thread in which a certified Ex dBIIC cable gland must be installed			
Elect. Power	DC	Pn (hot)	-	6 W	-	8 W
		P (cold) 20°C	-	7.5 W	-	10.5 W
	AC	Pn (holding)	6 W	-	8 W	-
		Attraction cold	7.5 W	-	10.5 W	-

Voltages "Un"	VAC/Hz	Code	VDC	Code	VAC/Hz	Code	VDC	Code
-10% to +10% of the Un	230/50-60	P9	24	C2	230/50-60	P9	24	C2
	110/50-60	P2	48	C4	110/50-60	P2	48	C4
	24/50-60	P0	110	C5	24/50-60	P0	110	C5
	48/50-60	S4			48/50-60	S4		

To Order a Coil choose Coil Ref + Voltage Code, example: **496700** for **24 VDC** = **496700C2**

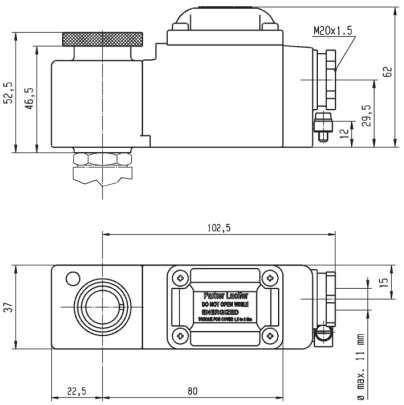

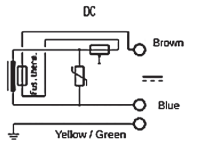

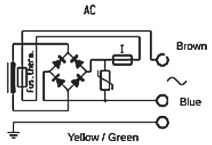

Tel: +45 63 12 83 00 | Email: ps@hymatik.com | www.hymatik.com | Hvidkaervej 27a, DK-5250 Odense SV, Denmark

Product Certifications

Each valve carries its own identification number. It is sent out from the factory with a Quality Assurance Certificate ensuring the following:

- Materials traceability of all identified parts is assured back to source

Identified stainless steel parts have either a EN10204.3.1B declaration or a supplier's attest

- **Final Test declaration**

Confirms correct valve function at minimum and maximum rated pressures, with specified mains supply rating and checks that the maximal external & internal leakage rates values respect the valves specifications

- **ATEX and IECEx certificates**

Each product is delivered with its ATEX compliance certificate.

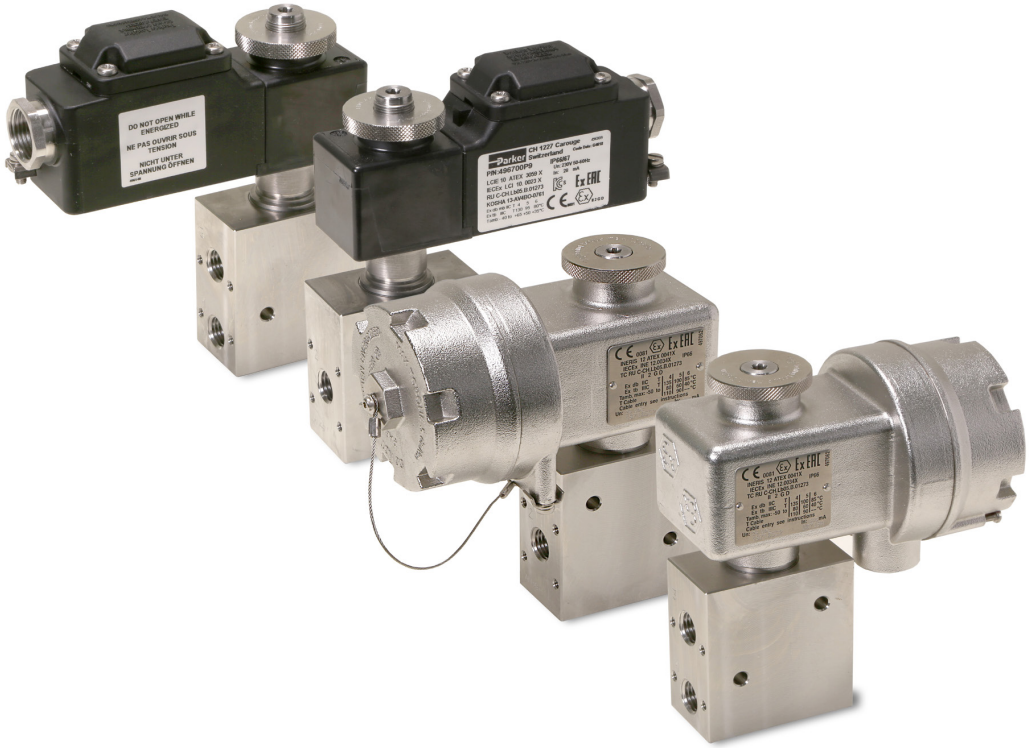

Tel: +45 63 12 83 00 | Email: ps@hymatik.com | www.hymatik.com | Hvidkaervej 27a, DK-5250 Odense SV, Denmark

Parker Worldwide

Europe, Middle East, Africa

AE – United Arab Emirates,
Dubai
Tel: +971 4 8127100
parker.me@parker.com

AT – Austria, St. Florian
Tel: +43 (0)7224 66201
parker.austria@parker.com

AZ – Azerbaijan, Baku
Tel: +994 50 2233 458
parker.azerbaijan@parker.com

BE/NL/LU – Benelux,
Hendrik Ido Ambacht
Tel: +31 (0)541 585 000
parker.nl@parker.com

BG – Bulgaria, Sofia
Tel: +359 2 980 1344
parker.bulgaria@parker.com

BY – Belarus, Minsk
Tel: +48 (0)22 573 24 00
parker.poland@parker.com

CH – Switzerland, Etoy
Tel: +41 (0)21 821 87 00
parker.switzerland@parker.com

CZ – Czech Republic, Klecany
Tel: +420 284 083 111
parker.czechrepublic@parker.com

DE – Germany, Kaarst
Tel: +49 (0)2131 4016 0
parker.germany@parker.com

DK – Denmark, Ballerup
Tel: +45 43 56 04 00
parker.denmark@parker.com

ES – Spain, Madrid
Tel: +34 902 330 001
parker.spain@parker.com

FI – Finland, Vantaa
Tel: +358 (0)20 753 2500
parker.finland@parker.com

FR – France, Contamine s/Arve
Tel: +33 (0)4 50 25 80 25
parker.france@parker.com

GR – Greece, Piraeus
Tel: +30 210 933 6450
parker.greece@parker.com

HU – Hungary, Budaörs
Tel: +36 23 885 470
parker.hungary@parker.com

IE – Ireland, Dublin
Tel: +353 (0)1 466 6370
parker.ireland@parker.com

IL – Israel
Tel: +39 02 45 19 21
parker.israel@parker.com

IT – Italy, Corsico (MI)
Tel: +39 02 45 19 21
parker.italy@parker.com

KZ – Kazakhstan, Almaty
Tel: +7 7273 561 000
parker.easteurope@parker.com

NO – Norway, Asker
Tel: +47 66 75 34 00
parker.norway@parker.com

PL – Poland, Warsaw
Tel: +48 (0)22 573 24 00
parker.poland@parker.com

PT – Portugal
Tel: +351 22 999 7360
parker.portugal@parker.com

RO – Romania, Bucharest
Tel: +40 21 252 1382
parker.romania@parker.com

RU – Russia, Moscow
Tel: +7 495 645-2156
parker.russia@parker.com

SE – Sweden, Borås
Tel: +46 (0)8 59 79 50 00
parker.sweden@parker.com

SK – Slovakia, Banská Bystrica
Tel: +421 484 162 252
parker.slovakia@parker.com

SL – Slovenia, Novo Mesto
Tel: +386 7 337 6650
parker.slovenia@parker.com

TR – Turkey, Istanbul
Tel: +90 216 4997081
parker.turkey@parker.com

UA – Ukraine, Kiev
Tel: +48 (0)22 573 24 00
parker.poland@parker.com

UK – United Kingdom, Warwick
Tel: +44 (0)1926 317 878
parker.uk@parker.com

ZA – South Africa, Kempton Park
Tel: +27 (0)11 961 0700
parker.southafrica@parker.com

North America

CA – Canada, Milton, Ontario
Tel: +1 905 693 3000

US – USA, Cleveland
Tel: +1 216 896 3000

Asia Pacific

AU – Australia, Castle Hill
Tel: +61 (0)2-9634 7777

CN – China, Shanghai
Tel: +86 21 2899 5000

HK – Hong Kong
Tel: +852 2428 8008

IN – India, Mumbai
Tel: +91 22 6513 7081-85

JP – Japan, Tokyo
Tel: +81 (0)3 6408 3901

KR – South Korea, Seoul
Tel: +82 2 559 0400

MY – Malaysia, Shah Alam
Tel: +60 3 7849 0800

NZ – New Zealand, Mt Wellington
Tel: +64 9 574 1744

SG – Singapore
Tel: +65 6887 6300

TH – Thailand, Bangkok
Tel: +662 186 7000

TW – Taiwan, Taipei
Tel: +886 2 2298 8987

South America

AR – Argentina, Buenos Aires
Tel: +54 3327 44 4129

BR – Brazil, Sao Jose dos Campos
Tel: +55 800 727 5374

CL – Chile, Santiago
Tel: +56 2 623 1216

MX – Mexico, Toluca
Tel: +52 72 2275 4200

Your local authorized Parker distributor

© 2019 Parker Hannifin Corporation. All rights reserved.

Catalogue 1111/UK- 11 04/2019 - FCSE

EMEA Product Information Centre
Free phone: 00 800 27 27 5374
(from AT, BE, CH, CZ, DE, DK, EE, ES, FI, FR, IE, IL, IS, IT, LU, MT, NL, NO, PL, PT, RU, SE, SK, UK, ZA)

US Product Information Centre
Toll-free number: 1-800-27 27 537

www.parker.com