

Parker Sporlan Refrigeration & Air Conditioning Catalogue

aerospace
climate control
electromechanical
filtration
fluid & gas handling
hydraulics
pneumatics
process control
sealing & shielding

Parker

SPORLAN

ENGINEERING YOUR SUCCESS.

MKC
Type Coils for High Pressure E Series Solenoid Valves

Parker Sporlan **MKC** solenoid coils are constructed with some finest materials available. The number 1 or 2 coils are Class F and are available in many voltage and cycle ratings.

The preferred coil should be selected depending on the application and based on the required: current, voltage and IP rating. If the coil with specifications different from those in the table is required, please contact your Parker Sporlan representative.

Technical Specification

Part Number	Coil Type	Power	Electrical Connection
310683	MKC-1E 24/50-60	10 W	DIN connector (not included)
310678	MKC-1E 120/50-60	10 W	DIN connector (not included)
310679	MKC-1E 220-240/50	10 W	DIN connector (not included)
310682	MKC-1E 208-240/50-60	10 W	DIN connector (not included)
310675	MKC-2E 24V 50-60HZ	15W	DIN connector (not included)
310677	MKC-2E 120/50-60	15W	DIN connector (not included)
310681	MKC-2E 220-240/50	15W	DIN connector (not included)
310674	MKC-2E 208-240/50-60	15W	DIN connector (not included)
310040	MKC-1E 12 DC	15W	DIN connector (not included)
310041	MKC-1E 24 DC	15W	DIN connector (not included)
310691	MKC-2E 24 DC	18W	DIN connector (not included)
600000R	PG 9/11 DIN connector for MKC-1E and MKC-2E coils		

5

MKC-1E

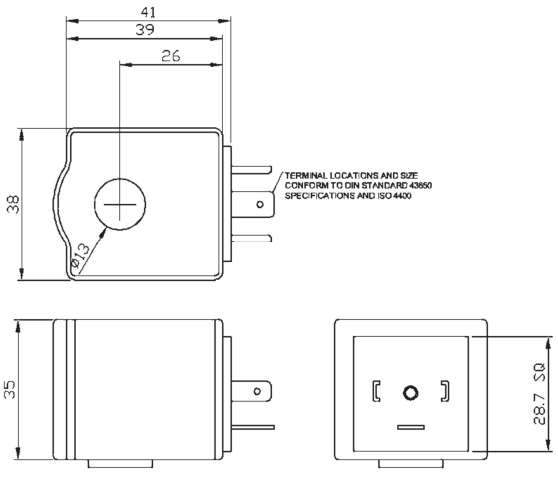

MKC-2E

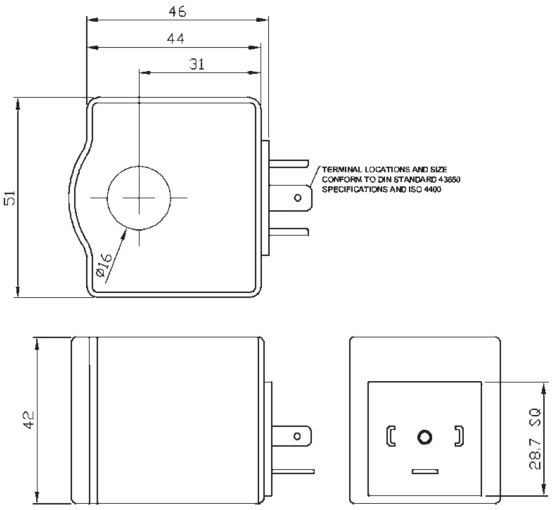

For all requests, consult your nearest Parker Sporlan Wholesaler or contact us on:
racecustomerservice@parker.com / www.parker.com/race

Accurate at the time of going to print.

Tel: +45 63 12 83 00 | Email: ps@hymatik.com | www.hymatik.com | Hvidkaervej 27a, DK-5250 Odense SV, Denmark