ENERPAC

INDUSTRIAL TOOLS

- Cylinders
- Lifting Products
- Pumps
- Control Valves
- System Components
- Presses
- Pullers
- Specialty Tools
- Cutters
- Bolting Tools
- Flange Maintenance
- Heavy Lifting Technology
- On-site Machining



400+ PAGES FILLED
WITH OVER 2000 TOOLS

GB E330e

Table of Contents

ENERPAC

Introduction
The Right Tool 2-3

Cylinders & Lifting Products 4 - 73
Introduction & Overview ..... 4 - 5
RC-Series, Single-Acting, General Purpose Cylinders ..... 6 - 9
A, CAT, JBI, RB, RE-Series,
Cylinder Accessories for RC-cylinders 10
RA-Series, Aluminium Cylinders, Introduction 11
RAC-Series, Single-Acting, Aluminium Cylinders .....12 - 13
RACL-Series, Single-Acting,
Aluminium Lock Nut Cylinders .....14 - 15
RACH-Series, Single-Acting,
Aluminium Hollow Plunger Cylinders .....16 - 17
RARH-Series, Double-Acting,
Aluminium Hollow Plunger Cylinders .....18 - 19
RAR-Series, Double-Acting,
Aluminium Cylinders .....20 - 21
CULP-Series, Ultra-Flat Cylinders with Stop Ring 22
CUSP-Series, Ultra-Flat Cylinders, High Tonnage 23
LPL-Series, Single-Acting,
Low-Height Lock Nut Cylinders ..... 24 - 25
RSM, RCS-Series,
Single-Acting, Low-Height Cylinders ..... 26 - 27
RLT-Series, Low-Height Telescopic Cylinders ..... 28 - 29
RT-Series, Telescopic Cylinders ..... 30 - 31
BRC, BRP-Series, Single-Acting, Pull Cylinders ..... 32 - 33
RCH-Series, Single-Acting,
Hollow Plunger Cylinders ..... 34 - 35
RRH-Series, Double-Acting,
Hollow Plunger Cylinders ..... 36 - 37
BRD-Series, Double-Acting,
Precision Production Cylinders ..... 38 - 39
RR-Series, Double-Acting,
Long Stroke Cylinders ..... 40 - 43
High Tonnage Cylinders,
HCG, HCR, HCL, HCRL-Series, Introduction ..... 44 - 45
Quick Selection ..... 46 - 47
HCG-Series, Single-Acting, High Tonnage Cylinders ..... 48 - 51
HCR-Series, Double-Acting,
High Tonnage Cylinders ..... 52 - 55
HCL-Series, Single-Acting,
High Tonnage Lock Nut Cylinders ..... 56 - 59
HCRL-Series, Double-Acting,
High Tonnage Lock Nut Cylinders ..... 60 - 61
SC-Series, Cylinder-Pump Sets ..... 62 - 63
P, RC, V-Series, Extreme Environment Products..... 64
SC, SL, SR, SW-Series, Power Box
Portable Tool Sets 65
JH, JHA-Series, Aluminium and Steel Jacks 66
GBJ-Series, Steel Bottle Jacks 67
PR-Series, POW'R-RISER® Mobile Lifting Jacks ..... 68 - 69
PL-Series, POW'R-LOCK® Mobile Lifting Systems ..... 70 - 71
Custom Hydraulic Cylinders 72
Overview Heavy Lifting Capabilities 73

Pumps & Directional Control Valves 74 - 125
Introduction & Overview ..... 74 - 75
P-Series, Lightweight Hand Pumps ..... 76 - 77
P-Series, Steel Hand Pumps ..... 78 - 79
P-Series, Low Pressure Hand Pumps ..... 80 - 81
MP-Series, Multifluid Hand Pumps 82
P-Series, Foot Pump 83
P, 11-Series, Ultra-High Pressure Hand Pumps ..... 84 - 85
XC-Series, Cordless Hydraulic Pumps, portable ..... 86 - 87
ZC-Series, Cordless Hydraulic Pumps ..... 88 - 89
PU-Series, Economy Electric Pumps ..... 90 - 91
ZE2-Series, Electric Pumps ..... 92 - 93
E-Series, E-Pulse® Electric Pumps ..... 94 - 95
Z-Class Power Pumps Introduction ..... 96 - 97
ZU4-Series, Portable Electric Pumps ..... 98 - 103
ZE-Series, Electric Pumps ..... 104 - 109
PA-Series, Air Hydraulic Foot Pumps 110
PAM-Series, Air Hydraulic Pumps 111
PATG-Series, Turbo II, Air Hydraulic Pumps ..... 112 - 113
XA-Series, Air Driven Foot Pumps ..... 114 - 115
ZA4-Series, Modular Air Hydraulic Pumps ..... 116 - 117
ZG-Series, Gasoline Hydraulic Pumps ..... 118 - 119
Custom Hydraulic Pumps 120

Directional Control Valves 121 - 125
Introduction & Overview 121
VM, VE-Series, Pump Mounted Valves ..... 122 - 123
VC-Series, Remote Mounted Valves ..... 124 - 125
VC, VM, VE-Series, Valve Dimensions 125

System Components & Control Valves 126 - 145
Introduction & Overview ..... 126 - 127
H700-Series, High Pressure Hoses ..... 128 - 129
A, C, F, T-Series, Hydraulic Couplers ..... 130 - 131
HF-Series, Hydraulic Oil 132
A, AM-Series, Manifolds 132
FZ, BFZ, XSC-Series, Fittings 133
SFM-Series, Split-Flow Manifolds ..... 134 - 135
GF, GP-Series, Force & Pressure Gauges ..... 136 - 137
G, H-Series, Pressure Gauges ..... 138 - 139
T-Series, Test System Gauges 140
DGR-Series, Digital Pressure Gauge 141
GA45GC-Series, Gauge Adaptor Assembly 142
AMGC-Series, 4-Way Manifold Assemblies 142
GA, NV, V-Series, Gauge Accessories 143
V-Series, Pressure and Flow Control Valves ..... 144 - 145

Hydraulic Presses 146 - 155
Introduction & Overview 146
Custom Hydraulic Presses 147
XLP, VLP-Series, Bench & Workshop Presses ..... 148 - 149
BPR-Series, Roll-Frame Presses..... 150 - 151
A-Series, C-Clamp and Arbor Presses ..... 152 - 153
A, BSS, IPL, VB, VHJ-Series, Press Accessories 154
XLP, Safety Cages & Safety Screen 154
TM-Series, Tension Meter 155
LH-Series, Load Cells 155

Pullers 156 - 171
Introduction & Overview ..... 156 - 157
BHP-Series, Master Puller Sets 158
BHP-Series, Grip Puller Sets 159
BHP-Series, Cross Bearing Puller Sets 160
BHP-Series, Bearing Cup and Bearing Pullers 161
LGM-Series, Mechanical Lock-Grip Pullers ..... 162 - 163
LGH-Series, Hydraulic Lock-Grip Pullers ..... 164 - 165
BHP-Series,
Hydraulic Master Lock-Grip Pullers 166
LGHMS-Series,
Hydraulic Master Lock-Grip Pullers 167
IPM-Series Internal Puller 168
SGH, GPS-Series,
100 ton Hydraulic Sync Grip Pullers & Sets 169
EPH-Series, Posi Lock®
100 ton Hydraulic Grip Pullers ..... 170 - 171

Specialty Tools 172 - 191
Introduction & Overview ..... 172 - 173
MS-Series, Maintenance Sets ..... 174 - 177
SP-Series, Lightweight 35 ton Hydraulic Punch ..... 178 - 179
SP-Series, 50 ton Double-Acting Punch ..... 180 - 181
LW-Series, Hydraulic Vertical Lifting Wedge 182
SOH-Series, Hydraulic Machine Lifts 183
ER-Series, Heavy Duty Load Skates ..... 184 - 185
CM-Series, Industrial Storage Cases 186
A, WR-Series, Wedgie & Spread Cylinders 187
STB-Series, Pipe Bender Sets ..... 188 - 189
RP-Series, Hydraulic Rail Stressor ..... 190 - 191

Cutters 192 - 209
Introduction & Overview ..... 192 - 193
EB-Series, Bar Cutters 194
EBH-Series, Hydraulic Bar Cutters 195
EBE-Series, Electric Bar Cutters 196
EBC-Series, Cordless Bar Cutters 197
EDCH-Series, Decommissioning Cutters 198
EFBE-Series, Electric Flat Bar Cutters 199
ECCE-Series, Electric Chain Cutters ..... 200 - 201
EWCH-Series, Hydraulic Wire and Cable Cutters ..... 202 - 203
EWCE-Series Electric Wire and Cable Cutters 204
ECSE-Series, Cutter/Spreader Combination Tools 205
WHC, WHR-Series, Hydraulic Cutterheads 206
WMC-Series, Self-Contained Hydraulic Cutters 207
ZC, ZE, CH-Series Pumps & Hoses for Cutters..... 208-209

Bolting Tools and Pumps 210 - 317
Introduction & Overview ..... 210 - 211
S-Series, Square Drive Torque Wrenches ..... 212 - 215
BSH-Series, Heavy-Duty Impact Sockets 216
BUS-Series, Back-Up Spanners 217
STTL-Series, Safe T™ Torque Lock ..... 218 -219
W-Series, Hexagon Hydraulic Torque Wrenches ..... 220 - 229
W-SL-Series, Ultra-Slim Bi-Hexagonal Cassettes ..... 230 - 231
TSP, WTE, WRP-Series, Accessories for W-Series 232
Custom Torque Wrenches & Bolt Tensioners 233
RSL-Series, Hydraulic Torque Wrenches ..... 234 - 245
RLP-Series, Hexagon Cassettes for RSL-Series ..... 236 - 240
ERA, ERT, TWM-Series, Accessories for RSL-Series 241
RLP-SL-Series, Slimline Hexagon Cassettes ..... 242 - 243
RSQ-Series, Square Drive Cassettes ..... 244 - 245
DSX-Series, Square Drive Torque Wrenches .....246 - 248
THQ-Series, Twin Hoses 249
HMT-Series, Modular Torque Wrenches ..... 250 - 255
HLP-Series, Hexagon Cassettes for HMT ..... 252 - 253
HSQ Square Drive Torque Wrenches .....254 - 255
E-Series, Manual Torque Multipliers ..... 256 - 257
PTW-Series, Pneumatic Torque Wrenches ..... 258 - 261
STTC-Series, Safe T™ Torque Checker ..... 262 - 263
MCS-Series, Mobile Calibration System 264

Optimum Wrench-Pump-Hose Combinations 265
XC-Series, Cordless Torque Pumps..... 266 - 267
E-Series, E-Pulse® Electric Torque Pumps ..... 268 - 269
TQ-Series, Electric Torque Pumps ..... 270 - 271
ZU4T-Series, Electric Torque Pumps ..... 272 - 275
ZET-Series, Electric Torque Pumps ..... 276 - 277
LAT-Series, Air Hydraulic Torque Pump ..... 278 - 279
ZA4T-Series, Air Driven Torque Pumps ..... 280 - 285

Tensioners & Pumps (1500 bar) 286 - 305
HM-Series, Hydramax Topside Bolt Tensioners ..... 286 - 289
GT-Series, Topside Bolt Tensioners ..... 290 - 291
EAJ-Series, Aquajack Subsea Tensioners ..... 292 - 293
PGT-Series, Power Generation Bolt Tensioners ..... 294 - 295
FTR-Series, Foundation Bolt Tensioners ..... 296 - 297
FTE-Series, Foundation Bolt Tensioners ..... 298 - 299
HPT-Series, Tensioning Hand Pump 300
HT, B-Series, Hoses, Couplers, Hose Reels,
T-Pieces, Y-Pipe Assembles 301
ZUTP-Series, Electric Tensioning Pump..... 302
ATP-Series, Ultra-High Pressure Air Pump 303
Multi Stud Tensioning (MST) 304
Hydraulic Nuts 305

Joint Assembly & Separation 306 - 317
ATM-Series, Flange Alignment Tools ..... 306 - 307
FSC, FSH, FSM-Series, Wedge Spreaders ..... 308 - 309
NC-Series, Hydraulic Nut Splitters ..... 310 - 311
NSC, NSH-Series, Hydraulic Nut Splitters ..... 312 - 313
NSH-Series, Hydraulic Nut Splitters ..... 314 - 315
FF-Series, Mechanical Pipe Flange Face Tool ..... 316 - 317

Flange Maintenance Tools 318 - 333
Introduction & Overview ..... 318 - 319
SWi-Series, Flange Spreading Tools ..... 320 - 323
SG-Series, Flange Spreading Tools ..... 324 - 327
VC-Series, Valve Change-Out Tools..... 328 - 329
MG-Series, Flange Spreading Tool 330
FC-Series, Flange Pulling & Closing Tools 331
TFA-Serie, Wind Tower Flange Alignment Tools 332
HP-Series, Hydraulic Sealed Hand Pumps 333
1440, 3027-Series, Hydraulic Hoses 333

Table of Contents

Section Index

Heavy Lifting Technology 334 - 373
Introduction & Overview ... 334 - 335
SFP-Series, Electric Split-Flow Pumps ... 336 - 339
EVO-Series, Synchronous Lifting Systems ... 340 - 341
SCJ-Series, Self-Locking Cube Jack ... 342 - 345
BLS-Series, Climbing Jacks ... 346 - 347
JS-Series, Jack-Up Systems ... 348 - 349
HSL-Series, Heavy Lifting Strand Jacks ... 350 - 351
SHC, SHP-Series, SyncHoist, Synchronous Hoisting Systems ... 352 - 353
ML-Serie, Mini-Lift Hydraulic Gantry ... 354 - 355
SL, SBL-Series, Hydraulic Gantries ... 356 - 357
LH-Series, Low-Height Skidding System ... 358 - 361
HSK-Series, Skidding Systems ... 362 - 363
ETR-Series, Trolley Systems ... 364 - 365
ETT-Series, Turntables ... 366
SPMT-Series, Self-Propelled Modular Transporter ... 367
Custom Heavy Lifting Solutions ... 368
Lifting Solutions from Enerpac ... 369
Solution Consultations ... 370
Design & Manufacturing ... 371
Testing and Training ... 372
On-Demand Support ... 373

On-site Machining Tools 374 - 393
Introduction & Overview ... 374 - 375
FF, MM-Series, Flange Facing Machines ... 376 - 377
DLR-Series, Clamshell Pipe Cutting and Beveling Machines ... 378 - 379
OM-Series, General Orbital Milling Machines ... 380
WP-Series, Wind Power Orbital Milling Machines ... 381
LMR, MR, MRY, GM-Series, Linear Milling Machines ... 382 - 383
HTM, LPH, MHT, CHT-Series, Hot Tapping Machines ... 384 - 385
LSA-Series, Line Stop Actuators ... 385
MWDS-Series, Decommissioning Diamond Wire Saws ... 386
BS-Series, On-site Band Saws ... 387
HT, T, DDU-Series, Drilling & Tapping Machines ... 388 - 389
GeniSYS IV Portable 3-axis CNC Mill ... 390 - 391
MITT-Series, Isolation & Test Tools ... 392 - 393

Yellow Pages 394 - 416
Introduction & Overview ... 394 - 395
Safety Instructions ... 396 - 397
Pump Selection ... 398
Selection Worksheet ... 399
Basic System Set-ups ... 400 - 401
Basic Hydraulics ... 402 - 403
Conversion Tables ... 404
Cylinder Speed Charts ... 405
Valve Information ... 406
Hexagon Nut and Bolt Sizes ... 407
Torque Tightening ... 408 - 409
Bolt Tensioning ... 410 - 411
INFORMATE Bolting Integrity Software ... 412 - 413
Enerpac Academy ... 414 - 415
Enerpac Maintenance Program (EMP) ... 415
Enerpac Worldwide Locations ... 416



Cylinders & Lifting Products
Page 4-73



Pumps & Directional Valves
Page 74-125



System Components & Control Valves
Page 126-145



Presses
Page 146-155



Pullers
Page 156-171



Specialty Tools
Page 172-191



Cutters
Page 192-209



Bolting Tools
Page 210-317



Flange Maintenance Tools
Page 318-333



Heavy Lifting Technology
Page 334-373



On-site Machining Tools
Page 374-393

All information in this catalogue can be changed due to product improvements without prior notice.

© Copyright 2021, Enerpac Tool Group.
All rights reserved. Any copying or other use of material in this catalogue (text, illustrations, drawings, photo's) without express written consent is prohibited.

CUSTOMER-DRIVEN INNOVATION

INDUSTRY LEADING TECHNOLOGY

CONTINUOUS IMPROVEMENT



ENDLESS INNOVATION RESULTS IN THE RIGHT TOOL

We believe it takes advanced technical expertise and ingenuity to develop the industry's most trusted solutions. Our relentless pursuit to deliver the highest standard of excellence means never compromising on quality. Yet, it all starts with a thorough understanding of our customer needs, the environments they work in and the ideas of tomorrow that help get jobs done faster, easier and safer.

SOLVING CUSTOMER PROBLEMS

One of our core values is to continually innovate and solve customer problems. That all begins with the discovery process. Through the efforts of a dedicated innovation team and several centers of excellence, new ideas are uncovered by listening to our customer's pain points and observing how they perform tasks in their own environments. These inputs lead to the forming of ideas and eventually prototypes that can be tested, refined and transformed into finished products.

FIND OUR NEWEST PRODUCTS AT...

enerpac.com/innovation

Continuous improvement means new products are introduced and made available to customers on a regular basis throughout the year. Find the newest Enerpac products at Enerpac.com/innovation.

THE RIGHT TOOL
MAKES ALL THE DIFFERENCE

Backed by a global legacy of ultra-reliable quality and superior precision, Enerpac is pushing the industry forward with a wide range of advanced industrial tools and services that first and foremost ensure our customers operate safely and productively every day. It isn't about being compliant. Or "as good" as the next guy; we outpace the competition by delivering technically superior solutions that are easy to get, safe to use and built to outlast.

NEVER COMPROMISE

Enerpac combines technical excellence with proven performance – every day, every year, year after year. We believe customers shouldn't have to compromise – they can rest easy knowing that even in the most complex situations, their reputations and productivity are protected by the most trusted industrial tools available.

SAFETY AND PRODUCTIVITY

Our customers put their physical well-being and reputations on the line each day they go to work; we take the fact that they put their trust in us very seriously. Enerpac team members are obsessively committed to developing solutions that keep the world's workers safe and productive in highly demanding working conditions.

ON-DEMAND ACCESS

For us, offering the ideal customer experience means working overtime to make sure our customers can be heroes when it matters most by providing on-demand access to a vast catalog of products and services, extensive training and mobilized field teams no matter where they are in the world.

As a global market leader in high-pressure hydraulic tools, controlled force products and solutions for precision positioning of heavy loads, Enerpac products have maintained and moved some of the largest structures on earth. They are the industry standard in aerospace, infrastructure, manufacturing, mining, oil & gas, power generation and much more.

110
YEARS OF HISTORY

~2600
EMPLOYEES

100+
COUNTRIES

2500+
DISTRIBUTORS

3500+
POINTS OF SALE



Hydraulic Cylinders and Lifting Products

ENERPAC

Enerpac hydraulic cylinders are available in hundreds of different configurations. Whatever the industrial application... lifting, pushing, pulling, bending, holding... whatever the force capacity, stroke length, or size restrictions... single- or double-acting, solid or hollow plunger, you can be sure that Enerpac has the cylinder to suit your high force application. Enerpac jacking cylinders fully comply to ASME B30.1 (except BRD-Series).



With the 3rd Generation comes a trio of key features

The next evolution of the legendary Enerpac RC-Series hydraulic cylinder. The driving force of the Enerpac cylinder range, the new **RC-TRIO** is as **versatile** as ever. Featuring a ne w Trio Bearing System for **enhanced durability** and a hybrid spring-return system for **faster retraction** and even **greater productivity**.

NEW RC-TRIO SERIES CYLINDERS



New TRIO Bearing System

- Includes up to 4 high-performance wear bands that offer increased resistance to damage, reducing bearing load and increasing cylinder lifespan.
- Hardened composite material wear bands increase bearing surface area for greater sideload resistance - Significantly improving cylinder life.
- New high-performance Polyethylene seals last longer than ever, improving lifespan and keep you working for longer.

New TRIO Stop Ring

- Part of the Trio Bearing System, the Trio Stop Ring includes an additional wear band or high-strength bronze to absorb greater side load
- Capable of taking full cylinder extension force
- Features durable wiper to help prevent contamination from entering the cylinder during retract cycles.

New TRIO Spring System

- Hybrid pre-tensioned return springs for up to 3x faster retraction and increased productivity.
- High-strength steel wire improves spring life
- Spring retention design improves serviceability while allowing higher pre-load during assembly
- Spring is easily removed without special tools.

Durable Piston Rod

- High-strength steel plunger for improved life and sideload resistance
- Nickel-plated plunger coating improves corrosion protection
- Internal plunger threads for easy tool fixturing.

Enhanced Ergonomics

- Standard carry handles on cylinders from 15 up to 25 kg. Sizes above include certified lifting eyes or optional handles.
- Collar threads, plunger threads and base mounting holes enable easy fixturing (on most models).

Improved Saddle Retention

- Hardened plunger saddle protects plunger end during all lifting operations
- Easily removable for access to plunger mounting threads
- Tilt and smooth saddles available as accessories (compatible with new range of CATS-Series Tilt Saddles).

Enduring Compatibility

- For full compatibility and peace of mind, the new RC-Series model numbers, external dimensions and threads remain unchanged from prior RC-Series cylinders. Ensuring compatibility with historical versions and systems.

Note: The cut-away drawing is representative of typical cylinder construction, and may not represent all cylinders in this section.



Hydraulic Cylinders and Lifting Products Section Overview

Capacity [1] ton (kN)	Stroke Range (mm)	Cylinder Type and Functions	Series	Page
5 - 95 (45 - 933)	16 - 362	General Purpose Cylinders, Single-Acting Accessories: Saddles, Base Plates, Mounting Blocks, Clevis Eyes	RC A, CATS JBI, RE	6 ▶ 10 ▶
10 - 150 (63 -1589)	50 - 250	Aluminium Cylinders, Single-Acting, Lock Nut, Hollow Plunger	RAC RACL RACH	12 ▶ 14 ▶ 16 ▶
20 - 150 (229 -1589)	50 - 250	Aluminium Cylinders, Double-Acting Hollow Punger & Solid Plunger	RARH RAR	18 ▶ 20 ▶
10 - 1000 (97 - 10.165)	6 - 17	Ultra-Flat Cylinders, Single-Acting, Load Return, with Stop Ring or Tilting Function	CULP CUSP	22 ▶ 23 ▶
60 - 500 (606 - 5114)	45 - 50	Low-Height Lock Nut Cylinders Single-Acting, Load Return	LPL	24 ▶
5 - 150 (45 - 1386)	6 - 62	Low-Height Cylinders, Single-Acting or spring-return	RSM RCS	26 ▶
4 - 74 (43 - 727)	17 - 600	Low-Height Telescopic Cylinders Multi-Stage Telescopic Cylinders	RLT RT	28 ▶ 30 ▶
2,5 - 50 (24 - 506)	127 - 154	Pull Cylinders, Single-Acting, Spring Return	BRC BRP	32 ▶
12 - 145 (125 - 1429)	8 - 258	Hollow Plunger Cylinders, Single- and Double-Acting	RCH RRH	34 ▶ 36 ▶
4 - 23 (35 - 222)	28 - 260	Precision Production Cylinders, Double-Acting (including Mounting Attachments)	BRD	38 ▶
10 - 520 (101 - 5108)	16 - 1219	Long Stroke Cylinders, Double-Acting	RR	40 ▶
50 - 1000 (550 - 10.644)	50 - 300	High Tonnage Cylinders, Single- and Double-Acting	HCG HCR	48 ▶ 52 ▶
50 - 1000 (550 - 10.644)	50 - 300	High Tonnage Lock Nut Cylinders, Single- and Double-Acting	HCL HCRL	56 ▶ 60 ▶
1 - 95 (8,9 - 933)	11 - 362	Cylinder - Pump Sets, Single-Acting Extreme Environment Products Power Box – Portable Tool Sets	SC RC, P, V SL, SR, SW	62 ▶ 64 ▶ 65 ▶
2 - 100 (20 - 980)	62 - 460	Aluminium and Steel Jacks Industrial Steel Bottle Jacks	JH, JHA GBJ	66 ▶ 67 ▶
54 - 181 (533 - 1778)	356 - 686	POW'R-RISER® Mobile Lifting Jacks POW'R-LOCK™ Mobile Lift System	PR PL	68 ▶ 70 ▶

[1] All ton values specified in this catalog are metric ton and are approximate for cylinder class identification only. Please refer to the kN data for calculations.

Tel: +45 63 12 83 00 | Email: ps@hymatik.com | www.hymatik.com | Hvidkaervej 27a, DK-5250 Odense SV, Denmark

RC-Trio Series, Single-Acting Cylinders

ENERPAC

▼ From left to right: **RC2510, RC53, RC1002, RC108, RC5010, RC156**



- **Trio Bearing system with hardened composite wear bands for optimal side load resistance**
- **Strengthened Trio Stop Ring improves durability and side load resistance**
- **Trio Hybrid pre-tensioned spring system provides faster retraction**
- **High-grade polyethylene seals for low wear and long service life**
- **Plunger wiper reduces contamination, extending cylinder life.**
- **Collar and plunger threads and base mounting holes enable easy fixturing (on most models)**
- **Standard certified lifting eyes on cylinder models above 25 kg weight. Interchangeable with optional CHM6 carrying handle**
- **Designed for use in all positions**
- **Baked enamel finish for increased corrosion resistance**
- **Includes CR400 coupler, dust cap and collar thread protector**
- **RC-Series model numbers, external dimensions and threads remain unchanged from prior RC-Series cylinders**

The Industry Standard General Purpose Cylinder



Saddles

All RC cylinders (except RC50 and RC101) have a hardened removable grooved saddle. For tilt and flat saddles, see the RC-Series accessory page. All CATS-Series Tilt Saddles use a nitrocarburization surface treatment for improved corrosion protection.

Page: 10



Base Plates

To ensure the stability of cylinders for lifting applications, base plates are available for 10, 25 and 50 ton RC cylinders.

Page: 10



Specialty Attachments

For solving all kinds of application problems, specialty attachments are available for 5, 10 and 25 ton RC cylinders.

Page: 176

▼ *Foundation repair: to re-stabilize the foundation, the 308 ton silo needed to be lifted, levelled and structurally supported. 25 ton RC-Series hydraulic jacks were attached to a bracket on the top of each steel pier. Powered by a Z-Class pump, the hydraulic jacks applied 20 ton of force at each placement to lift the silo 5,1 cm.*



▼ *Synchronous lifting set-up for 200 ton petrochemical process module using twelve RC2510 cylinders. To ensure the stability of the cylinders JBI25 base plates are installed.*



Single-Acting, General Purpose Cylinders



Optional Carrying Handle CHM6

Standard certified lifting eyes on cylinder models above 25 kg weight (RC5010 and heavier models). Interchangeable with optional carrying handle. Order model number **CHM6**.

▼ QUICK SELECTION CHART For complete technical information see next page.

Cylinder Capacity ton (kN)	Stroke (mm)	Model Number	Cylinder Effective Area (cm^2)	Oil Capacity (cm^3)	Collapsed Height (mm)	(kg)
5 (45)	16	**RC50**	6,4	10	41	1,0
	25	**RC51**	6,4	16	110	1,0
	79	**RC53**	6,4	50	165	1,5
	127	**RC55** *	6,4	83	216	1,9
	177	**RC57**	6,4	115	273	2,4
	232	**RC59**	6,4	151	324	2,8
10 (101)	26	**RC101**	14,4	38	90	1,8
	54	**RC102** *	14,4	78	121	2,3
	105	**RC104**	14,4	152	171	3,3
	156	**RC106** *	14,4	226	248	4,4
	203	**RC108**	14,4	294	298	5,4
	257	**RC1010** *	14,4	373	349	6,4
	304	**RC1012**	14,4	441	400	6,8
	356	**RC1014**	14,4	516	451	8,2
15 (142)	25	**RC151**	20,3	51	124	3,3
	51	**RC152**	20,3	104	149	4,1
	101	**RC154** *	20,3	205	200	5,0
	152	**RC156** *	20,3	308	271	6,8
	203	**RC158**	20,3	411	322	8,2
	254	**RC1510**	20,3	516	373	9,5
	305	**RC1512**	20,3	619	424	10,9
	356	**RC1514**	20,3	723	475	11,8
25 (232)	26	**RC251**	33,3	86	140	5,9
	50	**RC252** *	33,3	166	165	6,4
	102	**RC254** *	33,3	339	216	8,2
	158	**RC256** *	33,3	525	273	10,0
	210	**RC258**	33,3	697	324	12,2
	261	**RC2510**	33,3	867	375	14,1
	311	**RC2512**	33,3	1033	425	16,3
	362	**RC2514** *	33,3	1202	476	17,7
30 (295)	209	**RC308**	42,9	880	387	18,1
50 (498)	51	**RC502**	71,3	362	176	15,0
	101	**RC504**	71,3	719	227	19,1
	159	**RC506** *	71,3	1131	283	23,1
	260	**RC5010**	71,3	1855	384	31,8
	337	**RC5013**	71,3	2399	460	37,6
75 (718)	156	**RC756**	102,6	1601	286	29,5
	333	**RC7513**	102,6	3417	492	59,0
95 (933)	50	**RC1002**	133,1	676	219	36,7
	168	**RC1006**	133,1	2239	357	59,0
	260	**RC10010**	133,1	3466	449	72,6

* Available as set, see note on this page.

RC-Trio Series



Capacity:
5 - 95 ton

Stroke:
16 - 362 mm

Maximum Operating Pressure:
700 bar



Think Safety

Manufacturer's rating of load and stroke are maximum safe limits. Good practice encourages using only 80% of these ratings.

Page: 396



Lightweight Aluminium Cylinders

If you need a higher cylinder capacity-to-weight-ratio the **RAC-Series** are the perfect choice.

Page: 13



Gauges

Minimize the risk of overloading and ensure long, dependable service from your equipment. Refer to the System Components Section for a full range of gauges.

Page: 127

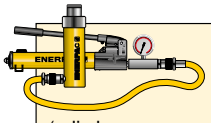

Cylinder-Pump Sets

All cylinders marked with an * are available as **sets** (cylinder, gauge, couplers, hose and pump) for your ordering convenience.

Page: 62

Tel: +45 63 12 83 00 | Email: ps@hymatik.com | www.hymatik.com | Hvidkaervej 27a, DK-5250 Odense SV, Denmark

RC-Trio Series, Single-Acting Cylinders

ENERPAC

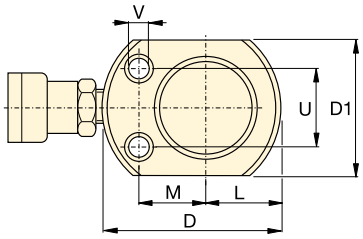

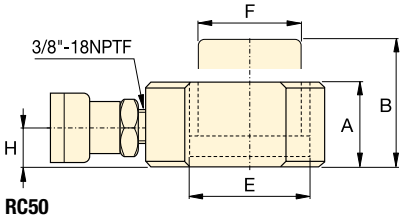

RC50

RC101 only
(U1 = 19 mm)

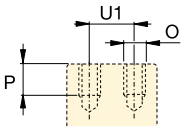

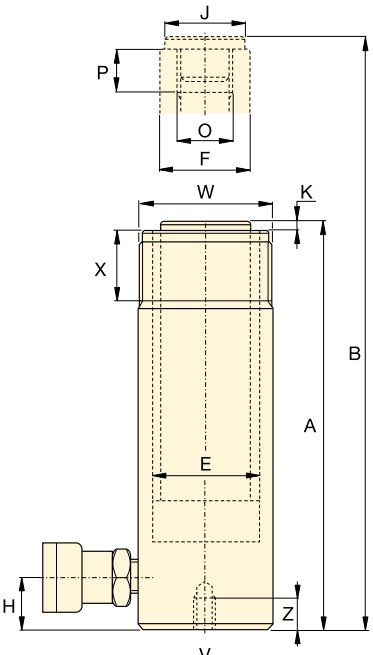

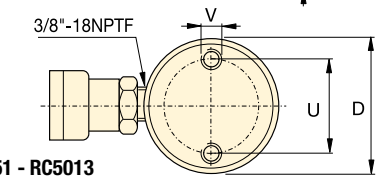

RC51 - RC5013

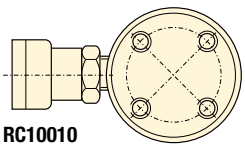

RC756 - RC10010

◀ For full features see previous page.

Speed Chart and Pump Selection Tool

See the Enerpac Cylinder Speed Chart in our 'Yellow Pages' to determine your approximate cylinder speed. See Pump Selection Tool on website for help to choose the most suitable pump for your application.

Page: 405

Cylinder Capacity ton (kN)	Stroke (mm)	Model Number	Cylinder Effective Area (cm^2)	Oil Capacity (cm^3)	Collapsed Height A (mm)	Extended Height B (mm)	Outside Dia. D (mm)
5 (45)	16	**RC50** [2]	6,4	10	41	57	58 [3]
	25	**RC51**	6,4	16	110	135	38
	79	**RC53**	6,4	50	165	244	38
	127	**RC55** [1]	6,4	83	216	343	38
	177	**RC57**	6,4	115	273	450	38
	232	**RC59**	6,4	151	324	556	38
10 (101)	26	**RC101** [4]	14,4	38	90	116	57
	54	**RC102** [1]	14,4	78	121	175	57
	105	**RC104**	14,4	152	171	276	57
	156	**RC106** [1]	14,4	226	248	404	57
	203	**RC108**	14,4	294	298	501	57
	257	**RC1010** [1]	14,4	373	349	606	57
	304	**RC1012**	14,4	441	400	704	57
	356	**RC1014**	14,4	516	451	807	57
15 (142)	25	**RC151**	20,3	51	124	149	70
	51	**RC152**	20,3	104	149	200	70
	101	**RC154** [1]	20,3	205	200	301	70
	152	**RC156** [1]	20,3	308	271	423	70
	203	**RC158**	20,3	411	322	525	70
	254	**RC1510**	20,3	516	373	627	70
	305	**RC1512**	20,3	619	424	729	70
	356	**RC1514**	20,3	723	475	831	70
25 (232)	26	**RC251**	33,3	86	140	166	86
	50	**RC252** [1]	33,3	166	165	215	86
	102	**RC254** [1]	33,3	339	216	318	86
	158	**RC256** [1]	33,3	525	273	431	86
	210	**RC258**	33,3	697	324	534	86
	261	**RC2510**	33,3	867	375	636	86
	311	**RC2512**	33,3	1033	425	736	86
	362	**RC2514** [1]	33,3	1202	476	838	86
30 (295)	209	**RC308**	42,9	880	387	596	102
50 (498)	51	**RC502**	71,3	362	176	227	127
	101	**RC504**	71,3	719	227	328	127
	159	**RC506** [1]	71,3	1131	283	442	127
	260	**RC5010**	71,3	1855	384	644	127
	337	**RC5013**	71,3	2399	460	797	127
75 (718)	156	**RC756**	102,6	1601	286	442	146
	333	**RC7513**	102,6	3417	492	825	146
95 (933)	51	**RC1002**	133,1	676	219	270	178
	168	**RC1006**	133,1	2239	357	525	178
	260	**RC10010**	133,1	3466	449	709	178

[1] Available as set, see note on page 7.
[2] RC50 cylinder has a non removable grooved saddle and no collar thread.
[3] RC50: D1 = 41 mm, L = 20 mm, M = 25 mm.
[4] RC101 has plunger with two thread holes and non-removable saddle.

Single-Acting, General Purpose Cylinders

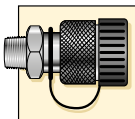

Couplers Included!
CR-400 couplers included on all models. Fits all HC-Series hoses.

Capacity:
5 - 95 ton

Stroke:
16 - 362 mm

Maximum Operating Pressure:
700 bar

RC-Trio Series



Cylinder Bore Dia. E (mm)	Plunger Dia. F (mm)	Base to Adv. Port H (mm)	Saddle Dia. J (mm)	Saddle Protr. from Plgr. K (mm)	Plunger Internal Thread O	Plunger Thread Length P (mm)	Base Mounting Holes			Collar Thread W	Collar Thread Length X (mm)	(kg)	Model Number
							Bolt Circle U (mm)	Thread V	Thd. Depth Z (mm)				
28,6	25,4	19	2)	2)	2)	2)	28,7	5,6 mm	—	—	—	1,0	RC50 2)
28,6	25,4	19	25	6	3/4" - 16 UN	14	25,4	1/4" - 20 UNC	14	1 1/2" - 16 UN	28	1,0	RC51
28,6	25,4	19	25	6	3/4" - 16 UN	14	25,4	1/4" - 20 UNC	14	1 1/2" - 16 UN	28	1,5	RC53
28,6	25,4	19	25	6	3/4" - 16 UN	14	25,4	1/4" - 20 UNC	14	1 1/2" - 16 UN	28	1,9	RC55 1)
28,6	25,4	19	25	6	3/4" - 16 UN	16	25,4	1/4" - 20 UNC	14	1 1/2" - 16 UN	28	2,4	RC57
28,6	25,4	19	25	6	3/4" - 16 UN	16	25,4	1/4" - 20 UNC	14	1 1/2" - 16 UN	28	2,8	RC59
42,8	38,1	19	–	–	#10 - 24 UN	6	39,6	5/16" - 18 UNC	12	2 1/4" - 14 UN	27	1,8	RC101 4)
42,8	38,1	19	35	6	1" - 8 UN	19	39,6	5/16" - 18 UNC	12	2 1/4" - 14 UN	27	2,3	RC102 1)
42,8	38,1	19	35	6	1" - 8 UN	19	39,6	5/16" - 18 UNC	12	2 1/4" - 14 UN	27	3,3	RC104
42,8	38,1	19	35	6	1" - 8 UN	19	39,6	5/16" - 18 UNC	12	2 1/4" - 14 UN	27	4,4	RC106 1)
42,8	38,1	19	35	6	1" - 8 UN	19	39,6	5/16" - 18 UNC	12	2 1/4" - 14 UN	27	5,4	RC108
42,8	38,1	19	35	6	1" - 8 UN	19	39,6	5/16" - 18 UNC	12	2 1/4" - 14 UN	27	6,4	RC1010 1)
42,8	38,1	19	35	6	1" - 8 UN	19	39,6	5/16" - 18 UNC	12	2 1/4" - 14 UN	27	6,8	RC1012
42,8	38,1	19	35	6	1" - 8 UN	19	39,6	5/16" - 18 UNC	12	2 1/4" - 14 UN	27	8,2	RC1014
50,8	41,3	19	38	9	1" - 8 UN	25	47,7	3/8" - 16 UNC	12	2 3/4" - 16 UN	30	3,3	RC151
50,8	41,3	19	38	9	1" - 8 UN	25	47,7	3/8" - 16 UNC	12	2 3/4" - 16 UN	30	4,1	RC152
50,8	41,3	19	38	9	1" - 8 UN	25	47,7	3/8" - 16 UNC	12	2 3/4" - 16 UN	30	5,0	RC154 1)
50,8	41,3	25	38	9	1" - 8 UN	25	47,7	3/8" - 16 UNC	12	2 3/4" - 16 UN	30	6,8	RC156 1)
50,8	41,3	25	38	9	1" - 8 UN	25	47,7	3/8" - 16 UNC	12	2 3/4" - 16 UN	30	8,2	RC158
50,8	41,3	25	38	9	1" - 8 UN	25	47,7	3/8" - 16 UNC	12	2 3/4" - 16 UN	30	9,5	RC1510
50,8	41,3	25	38	9	1" - 8 UN	25	47,7	3/8" - 16 UNC	12	2 3/4" - 16 UN	30	10,9	RC1512
50,8	41,3	25	38	9	1" - 8 UN	25	47,7	3/8" - 16 UNC	12	2 3/4" - 16 UN	30	11,8	RC1514
65,1	57,2	25	51	10	1 1/2" - 16 UN	25	58,7	1/2" - 13 UNC	19	3 5/16" - 12 UN	49	5,9	RC251
65,1	57,2	25	51	10	1 1/2" - 16 UN	25	58,7	1/2" - 13 UNC	19	3 5/16" - 12 UN	49	6,4	RC252 1)
65,1	57,2	25	51	10	1 1/2" - 16 UN	25	58,7	1/2" - 13 UNC	19	3 5/16" - 12 UN	49	8,2	RC254 1)
65,1	57,2	25	51	10	1 1/2" - 16 UN	25	58,7	1/2" - 13 UNC	19	3 5/16" - 12 UN	49	10,0	RC256 1)
65,1	57,2	25	51	10	1 1/2" - 16 UN	25	58,7	1/2" - 13 UNC	19	3 5/16" - 12 UN	49	12,2	RC258
65,1	57,2	25	51	10	1 1/2" - 16 UN	25	58,7	1/2" - 13 UNC	19	3 5/16" - 12 UN	49	14,1	RC2510
65,1	57,2	25	51	10	1 1/2" - 16 UN	25	58,7	1/2" - 13 UNC	19	3 5/16" - 12 UN	49	16,3	RC2512
65,1	57,2	25	51	10	1 1/2" - 16 UN	25	58,7	1/2" - 13 UNC	19	3 5/16" - 12 UN	49	17,7	RC2514 1)
73,0	57,2	29	51	10	1 1/2" - 16 UN	25	58,7	1/2" - 13 UNC	16	3 5/16" - 12 UN	49	18,1	RC308
95,2	79,4	33	71	2	—	—	95,3	1/2" - 13 UNC	19	5" - 12 UN	55	15,0	RC502
95,2	79,4	33	71	2	—	—	95,3	1/2" - 13 UNC	19	5" - 12 UN	55	19,1	RC504
95,2	79,4	35	71	2	—	—	95,3	1/2" - 13 UNC	19	5" - 12 UN	55	23,1	RC506 1)
95,2	79,4	35	71	2	—	—	95,3	1/2" - 13 UNC	19	5" - 12 UN	55	31,8	RC5010
95,2	79,4	35	71	2	—	—	95,3	1/2" - 13 UNC	19	5" - 12 UN	55	37,6	RC5013
114,3	95,3	30	71	2	—	—	114,3	5/8" - 13 UNC	16	5 3/4" - 12 UN	44	29,5	RC756
114,3	95,3	30	71	2	—	—	114,3	5/8" - 13 UNC	16	5 3/4" - 12 UN	44	59,0	RC7513
130,2	104,8	41	71	2	—	—	139,7	3/4" - 10 UNC	25	6 7/8" - 12 UN	44	36,7	RC1002
130,2	104,8	41	71	2	—	—	139,7	3/4" - 10 UNC	25	6 7/8" - 12 UN	44	59,0	RC1006
130,2	104,8	41	71	2	—	—	139,7	3/4" - 10 UNC	25	6 7/8" - 12 UN	44	72,6	RC10010

Tel: +45 63 12 83 00 | Email: ps@hymatik.com | www.hymatik.com | Hvidkaervej 27a, DK-5250 Odense SV, Denmark

Accessories for RC-Series Cylinders

ENERPAC

▼ SELECTION CHART

For use with Cylinder Capacity ton (kN)	Saddles			Base Plate	Mounting Block	Clevis Eyes	
	Flat	Grooved [1]	Tilt			Base [4]	Plunger
							
5 (45)	**A53F** [2]	**A53G** [2]	–	–	**RB5** [2], **AW51**[2], **AW53**[2]	**REB5** [2]	**REP5** [2]
10 (101)	**A12**[5], **A102F**[3]	**A102G** [3]	**CATS12** [3]	**JBI10** [3]	**RB10, AW102**	**REB10**	**REP10** [3]
15 (142)	–	**A152G**	**CATS12**	–	**RB15**	**REB15**	**REP10**
25 (232)	**A29** [5]	**A252G**	**CATS52**	**JBI25**	**RB25**	**REB25**	**REP25**
30 (295)	**A29** [5]	**A252G**	**CATS52**	–	**RB25**	–	**REP25**
50 (498)	–	–	**CATS100**	**JBI50**	–	–	–
75 (718)	–	–	**CATS100**	–	–	–	–
95 (933)	–	–	**CATS100**	–	–	–	–

[1] Standard on 5-30 ton RC-cylinders [2] Except RC50 [3] Except RC101 [4] Mounting screws are included. [5] Used with Bender Sets.

▼ DIMENSION CHARTS

Model Number	Saddle Dimensions (mm)		
	A	B	C
	Flat		
A53F	25	6	17
A102F	35	6	22
A12	51	48	1"-8 UNC
A29	51	48	1½"-16 UNC
	Grooved		
A53G	25	6	17
A102G	35	6	22
A152G	38	9	22
A252G	50	9	35

A53F, A102F

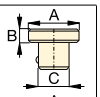

A12, A29





For Cylinder Capacity ton (kN)	Tilt Saddle Model Number	Addition to Collapsed Height A1 (mm)	Saddle Diameter J1 (mm)	
10 (101)	**CATS12**	14	35	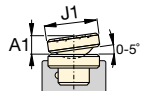
15 (142)	**CATS12**	11	35	
25 (232)	**CATS52**	15	50	
30 (295)	**CATS52**	15	50	
50 (498)	**CATS100**	15	71	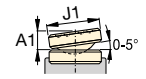
75 (718)	**CATS100**	15	71	
95 (933)	**CATS100**	15	71	

Model Number	Base Plate Dimensions Dimensions (mm)				
	A	B	C	D	E
JBI10	228	228	135	58	20
JBI25	279	279	140	86	26
JBI50	304	15	95	131	31

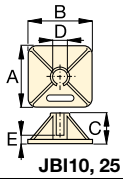

JBI10, 25

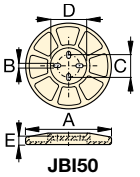

JBI50

Model Number	Mounting Block Dimensions (mm)							
	A	B	C	D	E	F	G	H
RB5	1½"-16UN	88	76	–	25	–	–	–
AW51	1½"-16UN	70	59	10	24	54	¼"-16 UN	41
AW53	1½"-16UN	72	7	7	19	57	¼"-20 UN	10
RB10	2¼"-14UN	114	88	–	25	–	–	–
AW102	2¼"-14UN	100	82	16	30	76	7/16"-20 UN	58
RB15	2¾"-16UN	101	114	–	38	–	–	–
RB25	3⁵⁄₁₆"-12UN	127	165	–	50	–	–	–

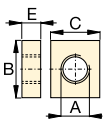

RB5, -10
RB15, -25

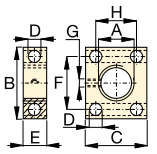

AW51

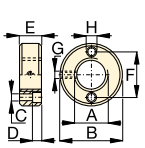

AW53

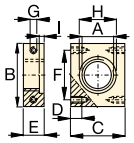

AW102 (l=4,8)

Type	Model Number	Clevis Eye Dimensions (mm)						Pin-to-Pin * (mm)
		A	B	C	D	E	F	
Base [4]	**REB5**	44	47	14	16	16	25	60,2
	REB10	63	66	25	22	25	35	78,0
	REB15	76	66	25	22	25	35	78,0
	REB25	95	79	38	31	31	41	87,6
Plunger	**REP5**	28	45	14	16	16	19	-
	REP10	42	61	25	22	25	28	-
	REP25	57	71	38	31	31	35	-

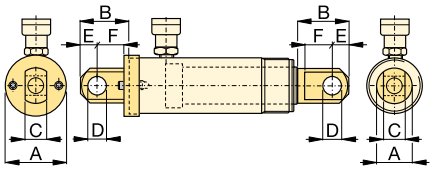

REB **REP**

[4] Mounting screws are included.

* Pin to Pin – REB and REP Clevises fitted. Add cylinder collapsed height.

The Enerpac Lightweight Aluminium Cylinders

▼ From left to right: **RAC, RACL, RACH, RAR**



RA Series

Capacity:
10 - 150 ton

Stroke:
50 - 250 mm

Maximum Operating Pressure:
700 bar

- **Lightweight, easy to carry and position to allow a higher cylinder capacity-to-weight-ratio**
- **Non-corrosive by design, aluminium has always been a good material for use in many caustic environments**
- **Composite Bearings on all moving surfaces guarantee no metal-to-metal contact, to resist side loads and increase cylinder life.**



Removable Hardened Saddle, protects plunger from being damaged by abrasive surface contact.

Stop Ring on all models absorbs eccentric loading and prevents plunger over-extension.

Composite Bearing material to prevent metal to metal contact, reducing side-load issues and increasing life.

Hard-coated Plunger and Base resist wear and prevent galling.

7075-T6 Aluminium Alloy Components for maximum strength and minimum weight.

Plunger Return Spring on all single-acting models for prompt cylinder return.

Composite Bearing material to prevent metal to metal contact, reducing side-load issues and increasing life.

Steel Base Plate protects cylinder base from abrasive surfaces and load-induced damage.



Think Safety

Manufacturer's rating of load and stroke are maximum safe limits.

Good practice encourages using only 80% of these ratings.

Page: 396



Aluminium versus Steel

Aluminium cylinders, while offering the most lightweight solution, also have some unique limitations due to material properties. It differs from steel in that it has a lower finite fatigue life. Aluminium cylinders should NOT be used in high-cycle applications such as production.

The Enerpac line of aluminium cylinders are designed to provide 5000 cycles at their recommended pressure. **This limit should not be exceeded.** In normal lifting and many maintenance applications, this should provide a lifetime of use.



Steel Base Plate

The steel base plate protects the cylinder from damage, it should not be removed.

The base holes in these aluminium cylinders are designed for securing the steel base plate. They will not withstand the capacity of the cylinder.

Do not use the base holes in these aluminium cylinders to attach any device to the cylinder.

RAC-Series, Aluminium Cylinders

ENERPAC

▼ Shown from left to right: **RAC5010, RAC15010, RAC304, RAC208**



Lightweight for Maximum Portability



Saddles

All RAC-cylinders are equipped with bolt-on removable hardened steel saddles. For Tilt Saddles see next page.

Page: 13



Lightweight Hand Pumps

The Enerpac composite lightweight hand pumps **P392** or **P802** make the optimal lightweight set.

Page: 76

- **Composite bearings prevent metal-to-metal contact, increasing cylinder life and resistance to side-loads of up to 10%**
- **Hard-Coat finish on all surfaces resists damage and extends cylinder life**
- **Handles included on all 30 - 150 ton models**
- **For protection against load-induced damage a saddle is standard on all models**
- **Steel base plate is standard on RAC 20 ton models and above. The steel base plate is optional only on RAC10 and 15 ton models**
- **Integral stop ring prevents plunger over-travel and is capable of withstanding the full cylinder capacity**
- **High strength return spring for rapid cylinder retraction**
- **CR400 coupler and dustcap included on all models**
- **All cylinders meet ASME B-30.1 standard.**

Cylinder Capacity at 700 bar ton (kN)	Stroke (mm)	Model Number	Cylinder Effective Area (cm^2)
10 (88)	50	**RAC102**	12,6
	100	**RAC104**	12,6
	150	**RAC106**	12,6
15 (137)	50	**RAC152**	19,6
	100	**RAC154**	19,6
	150	**RAC156**	19,6
20 (218)	50	**RAC202**	31,2
	100	**RAC204**	31,2
	150	**RAC206**	31,2
	200	**RAC208**	31,2
	250	**RAC2010**	31,2
30 (309)	50	**RAC302**	44,2
	100	**RAC304**	44,2
	150	**RAC306**	44,2
	200	**RAC308**	44,2
	250	**RAC3010**	44,2
50 (496)	50	**RAC502**	70,9
	100	**RAC504**	70,9
	150	**RAC506**	70,9
	200	**RAC508**	70,9
	250	**RAC5010**	70,9
100 (1002)	50	**RAC1002**	143,1
	100	**RAC1004**	143,1
	150	**RAC1006**	143,1
	200	**RAC1008**	143,1
	250	**RAC10010**	143,1
150 (1589)	50	**RAC1502**	227,0
	100	**RAC1504**	227,0
	150	**RAC1506**	227,0
	200	**RAC1508**	227,0
	250	**RAC15010**	227,0



◀ *The unique Enerpac RA-Series cylinders – lightweight and made of aluminium alloy – these RAC506 cylinders are ideal for the positioning of tunnel elements under the river (High Speed Train Line, The Netherlands).*

Single-Acting, Aluminium Cylinders

Optional Bolt-on Tilt Saddle Dimensions (mm)

For Cylinder Model / Capacity ton	Tilt Saddle * Model Number	Tilt Saddle Diameter J1	Addition to Collapsed Height A1
RAC20, 30	CATS30	55	11
RAC50	CATS50	71	14
RAC100	CATS150	97	19
RAC150	CATS200	126	18

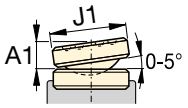

* Tilt saddles not available for 10 and 15 ton models

Optional Steel Base Plate

For Cylinder Model / Capacity ton	Base Plate [2] Model Number
RAC10	JBA10
RAC15	JBA15

[2] Base plate height of 6mm included on all 20-150 ton models. Base Plate is optional on 10-15 ton cylinders.

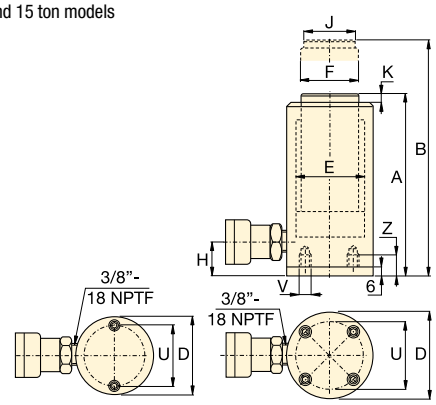

RAC102 - RAC156 RAC202 - RAC15010

RAC Series



Capacity:
10 - 150 ton

Stroke:
50 - 250 mm

Maximum Operating Pressure:
700 bar

Steel Base Plate
The steel base plate protects the cylinder from damage, it should not be removed.
See warning on page 11.

Oil Capacity (cm³)	Collapsed Height A (mm)	Extended Height B (mm)	Outside Diameter D (mm)	Cylinder Bore Diameter E (mm)	Plunger Diameter F (mm)	Bottom to Advance Port H (mm)	Saddle Diameter J (mm)	Saddle Protrusion from Plunger K (mm)	Bolt Circle U (mm)	Thread V (mm)	Thread Depth Z (mm)	(kg)	Model Number
60	154	201	58	40	32	23	24	3	39	M6	12	1,3	RAC102
130	204	304	58	40	32	23	24	3	39	M6	12	1,7	RAC104
190	254	404	58	40	32	23	24	3	39	M6	12	2,0	RAC106
100	161	211	70	50	40	23	29	3	48	M6	12	1,9	RAC152
200	211	311	70	50	40	23	29	3	48	M6	12	2,4	RAC154
290	261	411	70	50	40	23	29	3	48	M6	12	2,9	RAC156
156	174	224	85	63	50	27	40	3	70	M6	12	3,6	RAC202
312	224	324	85	63	50	27	40	3	70	M6	12	4,1	RAC204
468	274	424	85	63	50	27	40	3	70	M6	12	4,6	RAC206
624	324	524	85	63	50	27	40	3	70	M6	12	5,1	RAC208
780	374	624	85	63	50	27	40	3	70	M6	12	5,6	RAC2010
221	181	231	100	75	60	32	40	3	80	M6	12	4,5	RAC302
442	231	331	100	75	60	32	40	3	80	M6	12	5,2	RAC304
663	281	431	100	75	60	32	40	3	80	M6	12	5,9	RAC306
884	331	531	100	75	60	32	40	3	80	M6	12	6,6	RAC308
1105	381	631	100	75	60	32	40	3	80	M6	12	7,3	RAC3010
354	186	236	130	95	80	30	50	3	110	M6	12	8,5	RAC502
709	236	336	130	95	80	30	50	3	110	M6	12	9,8	RAC504
1063	286	436	130	95	80	30	50	3	110	M6	12	11,1	RAC506
1417	336	536	130	95	80	30	50	3	110	M6	12	12,4	RAC508
1771	386	636	130	95	80	30	50	3	110	M6	12	13,7	RAC5010
715	221	271	180	135	110	46	94	3	150	M10	12	17,3	RAC1002
1431	271	371	180	135	110	46	94	3	150	M10	12	19,6	RAC1004
2147	321	471	180	135	110	46	94	3	150	M10	12	21,9	RAC1006
2863	371	571	180	135	110	46	94	3	150	M10	12	24,2	RAC1008
3578	421	671	180	135	110	46	94	3	150	M10	12	26,5	RAC10010
1135	243	293	230	170	140	51	113	3	200	M10	12	25,3	RAC1502
2270	293	393	230	170	140	51	113	3	200	M10	12	29,3	RAC1504
3405	343	493	230	170	140	51	113	3	200	M10	12	33,3	RAC1506
4540	393	593	230	170	140	51	113	3	200	M10	12	37,3	RAC1508
5675	443	693	230	170	140	51	113	3	200	M10	12	41,3	RAC15010

Tel: +45 63 12 83 00 | Email: ps@hymatik.com | www.hymatik.com | Hvidkaervej 27a, DK-5250 Odense SV, Denmark

RACL-Series, Aluminium Lock Nut Cylinders

ENERPAC

▼ Shown from left to right: **RACL1006, RACL504, RACL5010**





Saddles

All RACL-cylinders are equipped with bolt-on removable hardened steel saddles. For Tilt Saddles see next page.

Page: 15



Hoses

Enerpac offers a complete line of high quality hydraulic hoses. To ensure the integrity of your system, specify only Enerpac hydraulic hoses.

Page: 128

- **Aluminium Lock Nut provides mechanical load holding for extended periods**
- **Hardened steel stop ring increasing cylinder life and resistance to side-loads of up to 5%**
- **Hard-Coat finish on all surfaces resists damage and extends cylinder life**
- **Composite bearings increase cylinder life and side load resistance**
- **Handles included on all models**
- **Steel base plate and saddle for protection against load-induced damage**
- **Integral stop ring prevents plunger over-travel and is capable of withstanding the full cylinder capacity**
- **High strength return spring for rapid cylinder retraction**
- **CR400 coupler and dustcap included on all models**
- **All cylinders meet ASME B-30.1 standards.**

Cylinder Capacity @ 700 bar ton (kN)	Stroke (mm)	Model Number	Cylinder Effective Area (cm^2)
20 (218)	50	**RACL202**	31,2
	100	**RACL204**	31,2
	150	**RACL206**	31,2
	200	**RACL208**	31,2
	250	**RACL2010**	31,2
30 (309)	50	**RACL302**	44,2
	100	**RACL304**	44,2
	150	**RACL306**	44,2
	200	**RACL308**	44,2
	250	**RACL3010**	44,2
50 (496)	50	**RACL502**	70,9
	100	**RACL504**	70,9
	150	**RACL506**	70,9
	200	**RACL508**	70,9
	250	**RACL5010**	70,9
100 (1002)	50	**RACL1002**	143,1
	100	**RACL1004**	143,1
	150	**RACL1006**	143,1
	200	**RACL1008**	143,1
	250	**RACL10010**	143,1
150 (1589)	50	**RACL1502**	227,0
	100	**RACL1504**	227,0
	150	**RACL1506**	227,0
	200	**RACL1508**	227,0
	250	**RACL15010**	227,0



◀ *The portable lock nut cylinder RACL1506 used for extended load supports during epoxy injection for bridge reinforcement.*

Single-Acting, Aluminium Lock Nut Cylinders

Optional Bolt-on Tilt Saddle Dimensions (mm)

For Cylinder Model / Capacity ton	Tilt Saddle Model Number	Tilt Saddle Diameter J1	Addition to Collapsed Height A1
RACL20, 30	CATS30	55	11
RACL50	CATS50	71	14
RACL100	CATS150	97	19
RACL150	CATS200	126	18

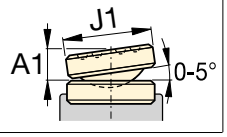

Steel Base Plate Mounting Holes

Cylinder Model / Capacity ton	Bolt Circle U (mm)	Thread V (mm)	Thread Depth [1] Z (mm)
RACL20	70	M6	12
RACL30	80	M6	12
RACL50	110	M6	12
RACL100	150	M10	12
RACL150	200	M10	12

[1] Including Base Plate Height of 6 mm and four (4) base plate bolts M6.

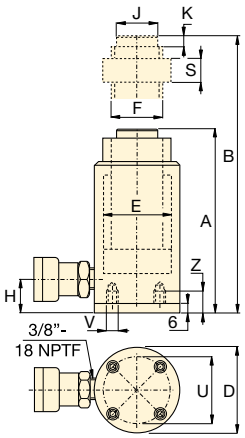

RACL Series



Capacity:
20 - 150 ton

Stroke:
50 - 250 mm

Maximum Operating Pressure:
700 bar

Oil Capacity (cm³)	Collapsed Height A (mm)	Extended Height B (mm)	Outside Diameter D (mm)	Cylinder Bore Diameter E (mm)	Plunger Diameter (Threaded) F (mm)	Bottom to Advance Port H (mm)	Saddle Diameter J (mm)	Saddle Protrusion from Plunger K (mm)	Lock Nut Height S (mm)	(kg)	Model Number
156	224	274	85	63	Tr 55 x 4	27	40	3	50	4,0	RACL202
312	274	374	85	63	Tr 55 x 4	27	40	3	50	4,6	RACL204
468	324	474	85	63	Tr 55 x 4	27	40	3	50	5,2	RACL206
624	374	574	85	63	Tr 55 x 4	27	40	3	50	5,8	RACL208
780	424	674	85	63	Tr 55 x 4	27	40	3	50	6,4	RACL2010
221	231	281	100	75	Tr 60 x 4	33	40	3	50	5,4	RACL302
442	281	381	100	75	Tr 60 x 4	33	40	3	50	6,1	RACL304
663	331	481	100	75	Tr 60 x 4	33	40	3	50	6,8	RACL306
883	381	581	100	75	Tr 60 x 4	33	40	3	50	7,5	RACL308
1105	431	681	100	75	Tr 60 x 4	33	40	3	50	8,2	RACL3010
354	236	286	130	95	Tr 80 x 4	30	50	3	50	9,3	RACL502
709	286	386	130	95	Tr 80 x 4	30	50	3	50	10,6	RACL504
1063	336	486	130	95	Tr 80 x 4	30	50	3	50	12,6	RACL506
1417	386	586	130	95	Tr 80 x 4	30	50	3	50	13,2	RACL508
1771	436	686	130	95	Tr 80 x 4	30	50	3	50	14,5	RACL5010
716	296	346	180	135	Tr 110 x 6	46	94	3	75	21,9	RACL1002
1431	346	446	180	135	Tr 110 x 6	46	94	3	75	24,2	RACL1004
2147	396	546	180	135	Tr 110 x 6	46	94	3	75	26,5	RACL1006
2863	446	646	180	135	Tr 110 x 6	46	94	3	75	28,8	RACL1008
3578	496	746	180	135	Tr 110 x 6	46	94	3	75	31,1	RACL10010
1135	323	373	230	170	Tr 140 x 6	51	113	3	80	32,2	RACL1502
2270	373	473	230	170	Tr 140 x 6	51	113	3	80	36,2	RACL1504
3405	423	573	230	170	Tr 140 x 6	51	113	3	80	40,2	RACL1506
4540	473	673	230	170	Tr 140 x 6	51	113	3	80	44,2	RACL1508
5675	523	773	230	170	Tr 140 x 6	51	113	3	80	48,2	RACL15010

Tel: +45 63 12 83 00 | Email: ps@hymatik.com | www.hymatik.com | Hvidkaervej 27a, DK-5250 Odense SV, Denmark

RACH, Aluminium Hollow Plunger Cylinders

ENERPAC

▼ Shown from left to right: **RACH1504, RACH15010, RACH206, RACH306**



The Lightweight Solution for Tensioning and Testing



Saddles

All RACH-cylinders are equipped with bolt-on hollow removable saddles of hardened steel.



Lightweight Hand Pumps

The Enerpac composite lightweight hand pumps **P392** or **P802** make the optimal lightweight set.

Page: 76

- **Hollow plunger design allows for both pull and push forces**
- **Composite bearings increase cylinder life and sideload resistance**
- **Hard-Coat finish on all surfaces resists damage and extends cylinder life**
- **Floating center tube increases seal and product life**
- **Handles standard on all models**
- **Steel base plate and saddle for protection against load-induced damage**
- **Integral stop ring prevents plunger over-travel and is capable of withstanding the full cylinder capacity**
- **High strength return spring for rapid cylinder retraction**
- **CR400 coupler and dustcap included on all models**
- **All cylinders meet ASME B-30.1 standards.**

Cylinder Capacity @ 700 bar ton (kN)	Stroke (mm)	Model Number	Cylinder Effective Area (cm^2)
20 (229)	50	**RACH202**	32,7
	100	**RACH204**	32,7
	150	**RACH206**	32,7
	200	**RACH208**	32,7
	250	**RACH2010**	32,7
30 (358)	50	**RACH302**	51,1
	100	**RACH304**	51,1
	150	**RACH306**	51,1
	200	**RACH308**	51,1
	250	**RACH3010**	51,1
60 (596)	50	**RACH602**	84,7
	100	**RACH604**	84,7
	150	**RACH606**	84,7
	200	**RACH608**	84,7
	250	**RACH6010**	84,7
100 (1157)	50	**RACH1002**	164,6
	100	**RACH1004**	164,6
	150	**RACH1006**	164,6
	200	**RACH1008**	164,6
	250	**RACH10010**	164,6
150 (1588)	50	**RACH1502**	225,8
	100	**RACH1504**	225,8
	150	**RACH1506**	225,8
	200	**RACH1508**	225,8
	250	**RACH15010**	225,8



◀ *An RACH306 powered by a P392 hand pump used to extract corroded carriage pins of refuse collection vehicles.*

Single-Acting, Aluminium Hollow Plunger Cylinders

Steel Base Plate Mounting Holes			
Cylinder Model / Capacity ton	Bolt Circle U (mm)	Thread V (mm)	Thread Depth [1] Z (mm)
RACH20	80	M6	12
RACH30	110	M6	12
RACH60	160	M6	12
RACH100	220	M10	12
RACH150	245	M10	12

[1] Including Base Plate Height of 6 mm and four (4) base plate bolts M6.

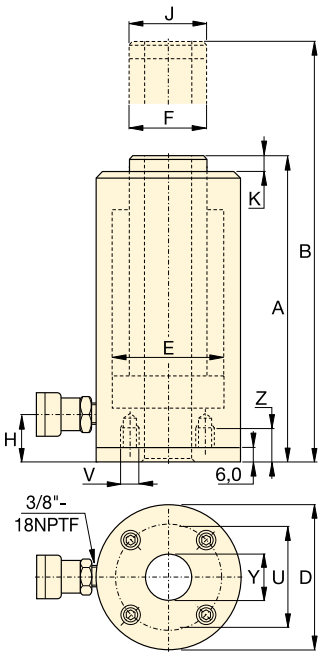

RACH Series



Capacity:
20 - 150 ton

Stroke:
50 - 250 mm

Center Hole Diameter:
27 - 79 mm

Maximum Operating Pressure:
700 bar

Oil Capacity (cm^3)	Collapsed Height A (mm)	Extended Height B (mm)	Outside Diameter D (mm)	Cylinder Bore Diameter E (mm)	Plunger Diameter F (mm)	Bottom to Advance Port H (mm)	Saddle Diameter J (mm)	Saddle Protrusion from Plunger K (mm)	Center Hole Diameter Y (mm)	(kg)	Model Number
164	188	238	100	75	55	29	55	10	27	5,2	**RACH202**
327	251	351	100	75	55	29	55	10	27	6,1	**RACH204**
491	315	465	100	75	55	29	55	10	27	7,1	**RACH206**
654	378	578	100	75	55	29	55	10	27	8,0	**RACH208**
818	442	692	100	75	55	29	55	10	27	9,0	**RACH2010**
256	208	258	130	95	70	29	70	10	34	8,0	**RACH302**
511	267	367	130	95	70	29	70	10	34	9,5	**RACH304**
766	333	483	130	95	70	29	70	10	34	11,2	**RACH306**
1022	395	595	130	95	70	29	70	10	34	12,9	**RACH308**
1277	458	708	130	95	70	29	70	10	34	14,5	**RACH3010**
423	251	301	180	130	100	61	100	12	54	16,2	**RACH602**
847	315	415	180	130	100	61	100	12	54	19,5	**RACH604**
1270	380	530	180	130	100	61	100	12	54	25,6	**RACH606**
1694	445	645	180	130	100	61	100	12	54	26,0	**RACH608**
2117	510	760	180	130	100	61	100	12	54	29,6	**RACH6010**
823	258	308	250	185	145	61	145	14	79	33,8	**RACH1002**
1646	325	425	250	185	145	61	145	14	79	39,8	**RACH1004**
2487	391	541	250	185	145	61	145	14	79	46,2	**RACH1006**
3291	459	659	250	185	145	61	145	14	79	52,2	**RACH1008**
4114	527	777	250	185	145	61	145	14	79	58,8	**RACH10010**
1129	280	330	275	205	150	61	145	14	79	48,9	**RACH1502**
2258	360	460	275	205	150	61	145	14	79	55,7	**RACH1504**
3387	430	580	275	205	150	61	145	14	79	63,0	**RACH1506**
4517	500	700	275	205	150	61	145	14	79	70,1	**RACH1508**
5646	570	820	275	205	150	61	145	14	79	77,2	**RACH15010**

RARH-Series, Hollow Plunger Cylinders

ENERPAC

▼ Shown from left to right: **RARH6010 and RARH306**



- **Lighter and shorter collapsed height than equivalent RACH models**
- **Double-acting for rapid retraction, regardless of hose lengths or system losses**
- **Built-in safety valve prevents accidental over-pressurization**
- **Hollow plunger design allows for both pull and push forces**
- **Hard coat finish on all surfaces resists damage and extends cylinder life**
- **Handles and CR400 couplers with dust caps included on all models**
- **Floating center tube increases seal life**
- **Steel baseplate and saddle for protection against load-induced damage**
- **Integral stop ring prevents plunger over-travel and is capable of withstanding the full cylinder capacity**
- **All cylinders meet ASME B-30.1 standards.**

The Lightweight Solution for Double-Acting Applications



Hoses

Enerpac offers a complete line of high-quality hydraulic hoses. To ensure the integrity of your system, specify only Enerpac hydraulic hoses.

Page: 128



Gauges

Minimize the risk of overloading and ensure long, dependable service from your equipment. Refer to the System Components section for a full range of gauges.

Page: 127



4-Way Control Valve

The **P84** and **P464** hand pumps feature a manual 4-way control valve, designed for use with one double-acting or two single-acting cylinders. For system set-up information:

Page: 78

Cylinder Capacity ton (kN)	Stroke * (mm)	Model Number	Maximum Cylinder Capacity at 700 bar (kN)		Cylinder Effective Area (cm^2)		Oil Capacity (cm^3)	
			Advance	Retract	Advance	Retract	Advance	Retract
30 (359)	50	**RARH302**	359	187	51,2	26,7	256	134
	150	**RARH306**	359	187	51,2	26,7	769	401
	250	**RARH3010**	359	187	51,2	26,7	1281	668
60 (595)	50	**RARH602**	595	264	84,9	37,7	425	189
	150	**RARH606**	595	264	84,9	37,7	1274	566
	250	**RARH6010**	595	264	84,9	37,7	2124	943
100 (1001)	50	**RARH1002**	1001	568	142,9	81,1	715	405
	150	**RARH1006**	1001	568	142,9	81,1	2144	1216
	250	**RARH10010**	1001	568	142,9	81,1	3574	2027
150 (1489)	50	**RARH1502**	1489	748	212,6	106,8	1063	534
	150	**RARH1506**	1489	748	212,6	106,8	3190	1602
	250	**RARH15010**	1489	748	212,6	106,8	5316	2670

* Intermediate strokes and other tonnages available upon request.

Aluminium Double-Acting Hollow Plunger Cylinders

Steel Base Plate

The steel base plate protects the cylinder base from damage, it should not be removed. The base holes in these aluminum cylinders are designed for securing the steel base plate.

They will not withstand the capacity of the cylinder. Do not use the base holes in these aluminum cylinders to attach any device to the cylinder.

RARH Series



Capacity:
30 - 150 ton

Stroke:
50 - 250 mm

Center Hole Diameter:
34 - 79 mm

Maximum Operating Pressure:
700 bar

Optional Threaded Hollow Saddles						
Saddle Type	**Cylinder Model Number**	**Saddle Model Number**	**Saddle Dimensions** (mm)			
			A	B	C	
Threaded Hollow	**RARH302, 306, 3010**	**HP3015**	63	1¼"-7 UN	9	
	RARH602, 606, 6010	**HP5016**	91	1⅝"-5½ UN	12	
	RARH1002, 1006, 10010	**HP10016**	126	2½"-8 UN	13	

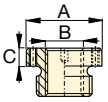

Smooth hollow saddles are standard on all RARH-models.

Steel Base Plate Mounting Holes (mm)			
Cylinder Model / Capacity (ton)	Bolt Circle U	Thread V	Thread Depth [1] Z
RARH30	110	M6	12
RARH60	160	M6	12
RARH100	200	M10	12
RARH150	250	M10	12

[1] Including Base Plate Height of 6 mm and four (4) base plate bolts.

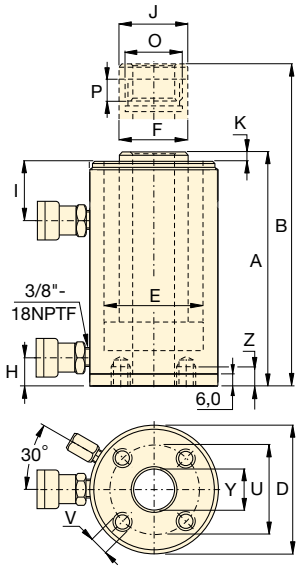



RACH-Series, Single-Acting, Spring Return

To be used when a single-acting pump is available and retraction time is not critical.

Page: 16

Pump Selection

A double-acting cylinder must be powered by a pump with a 4-way valve.

Page: 398

Collapsed Height A (mm)	Extended Height B (mm)	Outside Diameter D (mm)	Cylinder Bore Diameter E (mm)	Plunger Diameter F (mm)	Cyl. Base to Advance Port H (mm)	Cyl. Top to Return Port I (mm)	Saddle Diameter J (mm)	Saddle Protrusion from Plunger K (mm)	Plunger Internal Thread O (inch)	Plunger Thread Length P (mm)	Center Hole Diameter Y (mm)	(kg)	Model Number
209	259	135	95	75	22	64	63	10	1 13/16"-16 UN	23	34	8,9	**RARH302**
309	459	135	95	75	22	64	63	10	1 13/16"-16 UN	23	34	11,9	**RARH306**
409	659	135	95	75	22	64	63	10	1 13/16"-16 UN	23	34	14,9	**RARH3010**
246	296	180	130	110	48	83	92	13	2¾"-16 UN	20	54	16,8	**RARH602**
346	496	180	130	110	48	83	92	13	2¾"-16 UN	20	54	22,2	**RARH606**
446	696	180	130	110	48	83	92	13	2¾"-16 UN	20	54	27,6	**RARH6010**
254	304	235	165	130	61	78	126	13,5	4"-16 UN	27	79	28,9	**RARH1002**
354	504	235	165	130	61	78	126	13,5	4"-16 UN	27	79	38,3	**RARH1006**
454	704	235	165	130	61	78	126	13,5	4"-16 UN	27	79	47,7	**RARH10010**
264	314	280	190	150	61	83	127	18,8	4¼"-12 UN	40	79	42,4	**RARH1502**
364	514	280	190	150	61	83	127	18,8	4¼"-12 UN	40	79	56,2	**RARH1506**
464	714	280	190	150	61	83	127	18,8	4¼"-12 UN	40	79	70,0	**RARH15010**

Tel: +45 63 12 83 00 | Email: ps@hymatik.com | www.hymatik.com | Hvidkaervej 27a, DK-5250 Odense SV, Denmark

RAR-Series, Double-Acting Aluminium Cylinders

ENERPAC

▼ Shown from left to right: **RAR5010, RAR308, RAR204**





Saddles

All RAR-cylinders are equipped with bolt-on removable hardened steel saddles. For Tilt Saddles see next page.

Page: 21



Hoses

Enerpac offers a complete line of high quality hydraulic hoses. To ensure the integrity of your system, specify only Enerpac hydraulic hoses.

Page: 128

- **Double-acting for rapid retraction, regardless of hose lengths or system losses**
- **Composite bearings increase cylinder life and sideload resistance**
- **Hard-Coat finish on all surfaces resists damage and extends cylinder life**
- **Handles and CR400 couplers included on all models**
- **Steel base plate and saddle for protection against load-induced damage**
- **Integral stop ring prevents plunger over-travel and is capable of withstanding the full cylinder capacity**
- **Built-in safety valve prevents accidental over-pressurization.**

Cylinder Capacity @ 700 bar	Stroke	Model Number	Max. Cylinder Capacity (kN)	Cylinder Effective Area (cm^2)		Oil Capacity (cm^3)	
ton	(mm)		Push	Push	Pull	Push	Pull
20	50	**RAR202**	218	31,2	18,6	156	93
	100	**RAR204**	218	31,2	18,6	312	186
	150	**RAR206**	218	31,2	18,6	468	279
	200	**RAR208**	218	31,2	18,6	624	372
	250	**RAR2010**	218	31,2	18,6	780	465
30	50	**RAR302**	309	44,2	24,5	221	123
	100	**RAR304**	309	44,2	24,5	442	245
	150	**RAR306**	309	44,2	24,5	663	368
	200	**RAR308**	309	44,2	24,5	884	490
	250	**RAR3010**	309	44,2	24,5	1105	613
50	50	**RAR502**	496	70,9	26,7	354	134
	100	**RAR504**	496	70,9	26,7	709	267
	150	**RAR506**	496	70,9	26,7	1063	401
	200	**RAR508**	496	70,9	26,7	1417	534
	250	**RAR5010**	496	70,9	26,7	1771	668
100	50	**RAR1002**	1002	143,1	79,5	715	398
	100	**RAR1004**	1002	143,1	79,5	1431	795
	150	**RAR1006**	1002	143,1	79,5	2147	1193
	200	**RAR1008**	1002	143,1	79,5	2863	1590
	250	**RAR10010**	1002	143,1	79,5	3578	1988
150	50	**RAR1502**	1589	227,0	132,0	1135	660
	100	**RAR1504**	1589	227,0	132,0	2270	1320
	150	**RAR1506**	1589	227,0	132,0	3405	1980
	200	**RAR1508**	1589	227,0	132,0	4540	2640
	250	**RAR15010**	1589	227,0	132,0	5675	3300

▼ *An RAR506 was easy to position under a bulldozer for repair of frame member.*



Double-Acting Aluminium Cylinders

Optional Bolt-on Tilt Saddle Dimensions (mm)

For Cylinder Model / Capacity ton	Tilt Saddle Model Number	Tilt Saddle Diameter J1	Addition to Collapsed Height A1
RAR20	CATS20	42	10
RAR30	CATS30	55	11
RAR50	CATS50	71	14
RAR100	CATS101	71	10
RAR150	CATS150	97	19

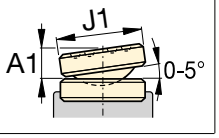

Steel Base Plate Mounting Holes

Cylinder Model / Capacity ton	Bolt Circle U (mm)	Thread V (mm)	Thread Depth [1] Z (mm)
RAR20	93	M6	12
RAR30	105	M6	12
RAR50	110	M6	12
RAR100	155	M6	12
RAR150	200	M6	12

[1] Including Base Plate Height of 6 mm and four (4) base plate bolts M6.

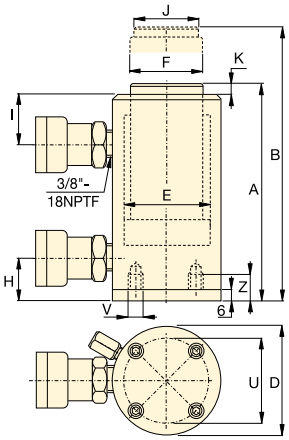

RAR Series



Capacity:
20 - 150 ton

Stroke:
50 - 250 mm

Maximum Operating Pressure:
700 bar

Collapsed Height A (mm)	Extended Height B (mm)	Outside Diameter D (mm)	Cylinder Bore Diameter E (mm)	Plunger Diameter F (mm)	Bottom to Advance Port H (mm)	Top to Retract Port I (mm)	Saddle Diameter J (mm)	Saddle Protrusion from Plunger K (mm)	(kg)	Model Number
189	239	113	63	40	30	50	30	3	7,4	RAR202
239	339	113	63	40	30	50	30	3	8,0	RAR204
289	439	113	63	40	30	50	30	3	8,6	RAR206
339	539	113	63	40	30	50	30	3	9,2	RAR208
389	639	113	63	40	30	50	30	3	9,8	RAR2010
201	251	125	75	50	30	55	40	3	8,6	RAR302
251	351	125	75	50	30	55	40	3	9,5	RAR304
301	451	125	75	50	30	55	40	3	10,4	RAR306
351	551	125	75	50	30	55	40	3	11,3	RAR308
401	651	125	75	50	30	55	40	3	12,2	RAR3010
201	251	145	95	75	30	56	50	3	11,1	RAR502
251	351	145	95	75	30	56	50	3	12,7	RAR504
301	451	145	95	75	30	56	50	3	14,3	RAR506
351	551	145	95	75	30	56	50	3	15,9	RAR508
401	651	145	95	75	30	56	50	3	17,5	RAR5010
251	301	185	135	90	43	80	75	3	16,4	RAR1002
301	401	185	135	90	43	80	75	3	19,3	RAR1004
351	501	185	135	90	43	80	75	3	22,2	RAR1006
401	601	185	135	90	43	80	75	3	25,1	RAR1008
451	701	185	135	90	43	80	75	3	28,0	RAR10010
248	298	230	170	110	38	75	94	3	24,2	RAR1502
298	398	230	170	110	38	75	94	3	28,9	RAR1504
348	498	230	170	110	38	75	94	3	33,2	RAR1506
398	598	230	170	110	38	75	94	3	37,9	RAR1508
448	698	230	170	110	38	75	94	3	42,6	RAR15010

Tel: +45 63 12 83 00 | Email: ps@hymatik.com | www.hymatik.com | Hvidkaervej 27a, DK-5250 Odense SV, Denmark

CULP-Series, Ultra-Flat Cylinders with Stop Ring

ENERPAC

▼ CULP50 Ultra-Flat Cylinder, with Stop Ring



CULP Series

Capacity:
10 - 100 ton

Stroke:
6 mm

Maximum Operating Pressure:
700 bar

- **Up to 4% side load of maximum capacity**
- **Stop ring for maximum stroke limitation**
- **Extremely low collapsed height**
- **Nitrocarburized surface treatment for harsh conditions.**

IMPORTANT!

All Ultra-Flat Cylinders require a solid lifting surface for correct support. The use of these flat cylinders on surfaces such as sand, mud or dirt, may result in cylinder damage.

INCORRECT! **CORRECT!**

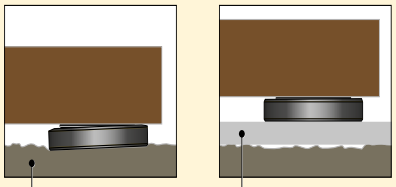

For more safety instructions see our 'Yellow Pages'.

Page: 396

▼ *The Ultra-Flat cylinders are designed for applications where high lifting forces are required in confined spaces starting at 2,8 cm.*



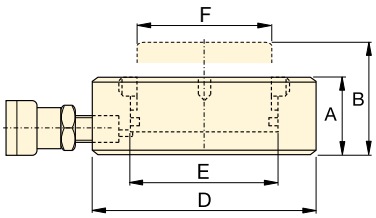



Hoses

Enerpac offers a complete line of high quality hydraulic hoses. To ensure the integrity of your system, specify only Enerpac hydraulic hoses.

Page: 128

Cylinder Capacity @ 700 bar **ton** (kN)	Stroke (mm)	Model Number	Cylinder Effective Area (cm^2)	Oil Capacity (cm^3)	Collapsed Height A (mm)	Extended Height B (mm)	Outside Diameter D (mm)	Cylinder Bore Diameter E (mm)	Plunger Diameter F (mm)	 (kg)
10 (97)	6	**CULP10** [1]	13,9	8,3	27,5	33,5	72	42	38	1,0
20 (198)	6	**CULP20** [1]	28,3	17,0	32,0	38,0	90	60	55	1,7
30 (310)	6	**CULP30** [1]	44,2	26,5	35,0	41,0	105	75	67	2,5
50 (550)	6	**CULP50** [1]	78,5	47,1	44,5	50,5	140	100	90	5,4
100 (1078)	6	**CULP100** [2]	153,9	92,5	65,0	71,0	195	140	125	11,5

[1] Coupler AR630 including dustcap: use HB7206 hose including AH630 coupler to connect to your pump.
[2] Coupler CR400 including dustcap: use HC-Series hose including CH604 coupler to connect to your pump.

High Tonnage, Ultra-Flat Cylinders

▼ CUSP-Series, Ultra-Flat High Tonnage Cylinders, integrated tilting function.



CUSP Series

Capacity:
10 - 1000 ton

Stroke Straight / Tilted Stroke:
7 - 17 mm / 6 - 10 mm

Integrated:
Tilting Function

Maximum Operating Pressure:
700 bar

- **Up to 4% side load of maximum capacity**
- **Extremely low collapsed height**
- **Integrated tilting function up to 4 degrees to evenly distribute the load**
- **Nitrocarburized surface treatment for harsh conditions**
- **"Red Line" for visual maximum stroke indication.**

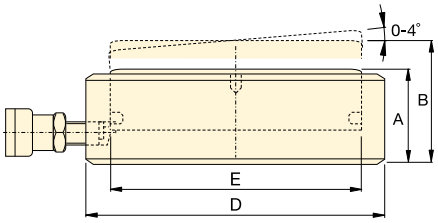

IMPORTANT!
CUSP-Cylinders DO NOT have a Stop Ring for stroke limitiation!

IMPORTANT!
All Ultra-Flat Cylinders require a solid lifting surface for correct support. The use of these flat cylinders on surfaces such as sand, mud or dirt, may result in cylinder damage.

See instructions on page 22 or more safety instructions in our Yellow Pages.

Page: 396

Cylinder Capacity @ 700 bar **ton** (kN)	Tilted Stroke (mm)	Straight Stroke (mm)	Model Number	Tilting +/- (degree)	Cylinder Effective Area (cm^2)	Oil Capacity (cm^3)	Collapsed Height A (mm)	Extended Height B (mm)	Cylinder Outside Diameter D (mm)	Cylinder Bore Diameter E (mm)	 (kg)
10 (97)	6	6,7	**CUSP10** [1]	2	13,9	9,3	35,5	41,5	72	42	1,2
20 (198)	6	7,0	**CUSP20** [1]	2	28,3	19,8	40,5	46,5	90	60	1,9
30 (310)	6	7,3	**CUSP30** [1]	2	44,2	32,1	42,5	48,5	105	75	2,7
50 (550)	10	13,3	**CUSP50** [1]	4	78,5	104	57,0	67,0	130	100	5,6
75 (792)	10	14,0	**CUSP75** [1]	4	113,1	158	60,5	70,5	150	120	8,0
100 (1078)	10	14,7	**CUSP100** [2]	4	153,9	226	63,5	73,5	170	140	10,8
150 (1589)	10	14,3	**CUSP150** [2]	3	227,0	324	65,0	75,0	200	170	15,3
200 (2090)	10	14,9	**CUSP200** [2]	3	298,6	446	69,0	79,0	229	195	21,5
250 (2542)	10	15,5	**CUSP250** [2]	3	363,1	569	72,5	82,5	252	215	27,3
300 (3167)	10	14,1	**CUSP300** [2]	2	452,4	637	72,5	82,5	282	240	34,4
400 (4008)	10	14,6	**CUSP400** [2]	2	572,6	837	77,5	87,5	316	270	46,2
500 (5115)	10	15,2	**CUSP500** [2]	2	730,6	1111	82,5	92,5	356	305	62,7
600 (5987)	10	15,6	**CUSP600** [2]	2	855,3	1334	87,5	97,5	386	330	78,4
750 (7527)	10	16,3	**CUSP750** [2]	2	1075,2	1757	93,5	103,5	432	370	105,2
1000 (10.165)	10	17,4	**CUSP1000** [2]	2	1452,2	2531	103,0	113,0	502	430	157,0

[1] Coupler AR630 including dustcap: Use HB7206 hose including AH630 coupler to connect to your pump.
[2] Coupler CR400 including dustcap: Use HC-Series hose including CH604 coupler to connect to your pump.

LPL-Series, Low-Height Lock Nut Cylinders

ENERPAC

▼ **LPL-Series, Low-Height Lock Nut Cylinders**



- **Lock nut provides mechanical load holding for a safe work environment**
- **Integrated tilt saddle allows for up to 5 degrees of misalignment**
- **Extreme low height for use in confined areas**
- **Side-load resistance 5-10% of maximum capacity**
- **Overflow port as stroke limiter to prevent plunger blow-out**
- **Single-acting, gravity-return.**



Integrated Tilt Saddles

All LPL-Series cylinders include integral tilt saddles with maximum tilt angles up to 5°.

The Summit Edition

Innovation is at the heart of the new Summit Edition of cylinders, delivering the high quality construction that you expect from Enerpac. The durability ensures your job gets done safely and reliably.

- Replaceable plunger support bearing adds support for eccentric loads *
- Nitrocarburization surface treatment for improved load and wear resistance and corrosion protection
- Low wear, high pressure seals provide longer service life.

* Eccentric load (or "side-load") is inevitable in heavy lifting. Our unique Summit Edition features provide the ultimate protection against side load. Increased bearing surface maintains stability and nitrocarburization treatment prevents scoring on the inside of the cylinder. Side-load poses a real problem.... our new cylinder features are the solution!

Page: 44

▼ *Only the extreme low-height LPL-cylinder fits in this confined area to lift the construction. The lock nut provides positive and safe mechanical load holding over a long period of time.*



Cylinder Capacity ton	Stroke (mm)	Model Number	Maximum Cylinder Capacity at 700 bar ton (kN)	Side-load Resistance of Maximum Capacity	Cylinder Effective Area (cm^2)
60	50	**LPL602**	**62** (606)	10%	86,6
100	50	**LPL1002**	**102** (1002)	10%	143,1
150	45	**LPL1602**	**162** (1589)	8%	227,0
200	45	**LPL2002**	**202** (1985)	8%	283,5
250	45	**LPL2502**	**259** (2541)	5%	363,1
400	45	**LPL4002**	**409** (4008)	5%	572,6
500	45	**LPL5002**	**522** (5114)	5%	730,6

Tel: +45 63 12 83 00 | Email: ps@hymatik.com | www.hymatik.com | Hvidkaervej 27a, DK-5250 Odense SV, Denmark

Single-Acting, Low-Height Lock Nut Cylinders

IMPORTANT!

All LPL-Series cylinders require a solid lifting surface for correct support. The use of these cylinders on surfaces such as sand, mud or dirt, may result in cylinder damage.

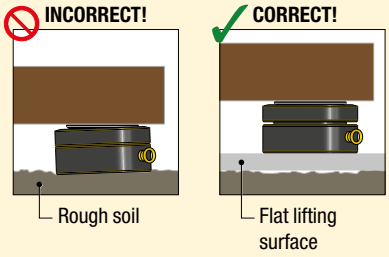

For more safety instructions see our 'Learning Center' on www.enerpac.com

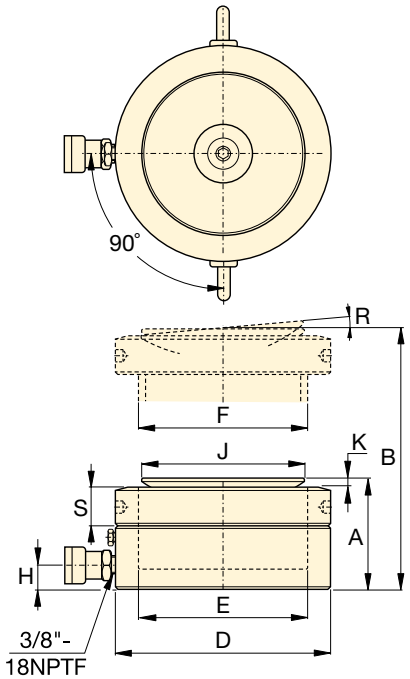

LPL Series



Capacity:
60 - 500 ton

Stroke:
45 - 50 mm

Maximum Operating Pressure:
700 bar



Longer Stroke Lock Nut Cylinders

For longer stroke applications **HCL and HCRL-Series** lock nut cylinders are the perfect choice.

Page: 46



SFP-Series, Split-Flow Pumps

SFP-Series Pumps with multiple outlets with equal oil flow. For lifting and lowering applications on multiple points these pumps are a far better alternative than using separately operated pumps.

Page: 336



Synchronous Lifting Systems

EVO-Series pumps the multi-functional lifting system and multiple lift point capabilities.

Page: 340

Oil Capacity (cm^3)	Collapsed Height A (mm)	Extended Height B (mm)	Outside Diameter D (mm)	Cylinder Bore Diameter E (mm)	Plunger Diameter F (mm)	Base to Advance Port H (mm)	Saddle Diameter J (mm)	Saddle Protrusion from Plgr. K (mm)	Saddle Max. Tilt Angle R	Lock Nut Height S (mm)	(kg)	Model Number
433,0	126	176	140	105	Tr 105 x 4	19	96	7	5°	28	15	**LPL602**
715,7	137	187	173	135	Tr 135 x 6	21	126	8	5°	31	25	**LPL1002**
1021,4	148	193	220	170	Tr 170 x 6	27	160	9	5°	40	43	**LPL1602**
1275,9	155	200	245	190	Tr 190 x 6	30	180	10	5°	43	55	**LPL2002**
1633,7	159	204	275	215	Tr 215 x 6	32	200	12	5°	43	70	**LPL2502**
2576,5	178	223	350	270	Tr 270 x 6	40	250	12	4°	55	129	**LPL4002**
3287,8	192	237	400	305	Tr 305 x 6	49	290	10	3°	61,5	183	**LPL5002**

RSM, RCS-Series, Low-Height Cylinders

ENERPAC

▼ Shown from left to right: **RSM1000, RSM300, RSM50, RCS1002, RCS302**



Maximum Power-to-Height Ratio



Saddles

All RCS-Series cylinders have plunger mounting holes for installation of tilt saddles. See table for selection and dimensional information.

Page: 27



Low Clearance Lifting

The **LW-Series Lifting Wedges** and **SOH-Series Machine Lifts** are the perfect choice for lifting the first few millimeters.

Page: 182

RSM-series, Low-Height Cylinders

- **Compact, flat design for use where most other cylinders will not fit**
- **Single-acting, spring return**
- **RSM750, 1000 and 1500 have handles for easy carrying**
- **Mounting holes permit easy fixturing**
- **Baked enamel finish for increased corrosion resistance**
- **CR400 coupler and dust cap included on all models[1)]**
- **Hard chrome plated high quality steel plungers**
- **Grooved plunger ends require no saddle.**

RCS-series, Low-Height Cylinders

- **Lightweight, low profile design for use in confined spaces**
- **Single-acting, spring return**
- **Baked enamel finish for increased corrosion resistance**
- **Plunger wiper reduces contamination, extending cylinder life**
- **CR400 coupler and dust cap included on all models**
- **Grooved plunger end with threaded holes for mounting tilt saddles**
- **Integral handle on RCS1002 for easy carrying**
- **Plated steel plungers.**

▼ *Only a couple of centimeters will do for an RSM-cylinder to lift a large construction.*

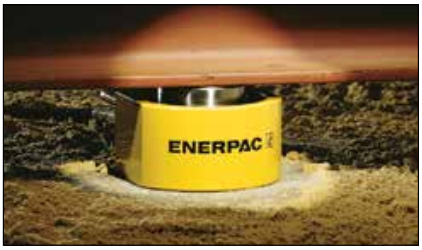

Cyl. Capacity ton (kN)	Stroke (mm)	Model Number	Cylinder Effective Area (cm^2)	Oil Capacity (cm^3)
5 (45)	6	**RSM50** [1)]	6,5	4
10 (101)	11	**RSM100** *	14,5	18
20 (201)	11	**RSM200** *	28,7	32
30 (295)	13	**RSM300** *	42,1	55
45 (435)	16	**RSM500** *	62,1	99
75 (718)	16	**RSM750**	102,6	164
90 (887)	16	**RSM1000**	126,7	203
150 (1386)	16	**RSM1500**	198,1	317
10 (101)	38	**RCS101** *	14,5	55
20 (201)	45	**RCS201** *	28,7	129
30 (295)	62	**RCS302** *	42,1	261
45 (435)	60	**RCS502** *	62,1	373
90 (887)	57	**RCS1002** *	126,7	722

[1)] RSM50 is fitted with an AR400 coupler.
* Available as set, see note on next page.

Single-Acting, Low-Height Cylinders

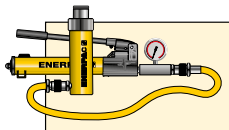

Cylinder-Pump Sets

All cylinders marked with an * are available as **sets** (cylinder, gauge, couplers, hose and pump) for your ordering convenience.

Page: 62

RSM, RCS Series



Capacity:
5 - 150 ton

Stroke:
6 - 62 mm

Maximum Operating Pressure:
700 bar

Optional Bolt On Tilt Saddle Dimensions (mm)

For Cylinder Model:	Model Number	J1	A1 *
RCS101	CATS13	35	20
RCS201, 302, 502	CATS53	50	26
RCS1002	CATS103	71	35

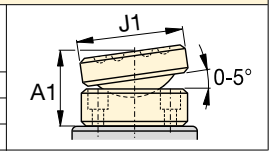

* A1 = Addition to Collapsed Height.



Power Box

Tool box with hand pump, gauge adaptor assembly, hose and RSM or RCS-cylinders.

Page: 65

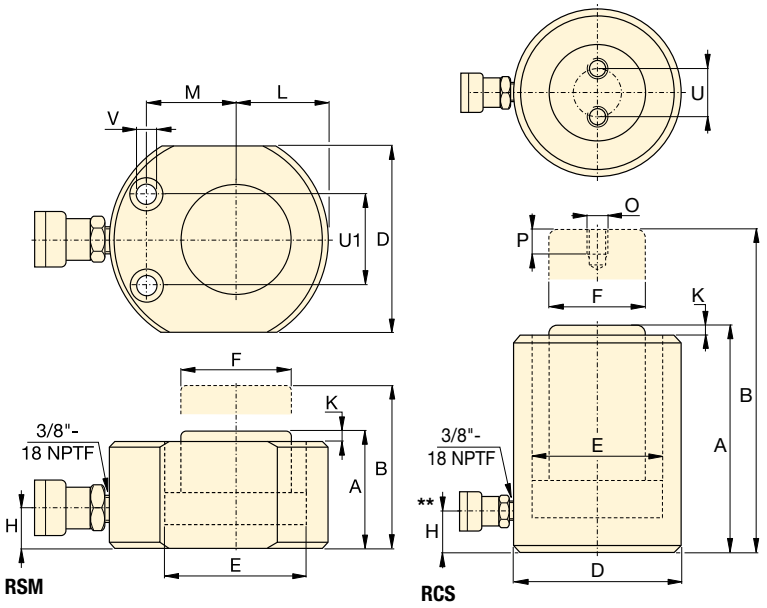

RSM Cylinder Mounting Hole Dimensions (mm)

Model Number	Bolt Circle U1	Hole Dia. V	Counter Bore Dia.	Counter Bore Depth
RSM50	28,5	5,5	9,1	4,3
RSM100	36,6	7,1	10,7	7,9
RSM200	49,3	10,0	15,1	9,9
RSM300	52,3	10,0	15,9	11,2
RSM500	66,5	11,0	19,0	12,7
RSM750	76,2	13,5	20,6	14,2
RSM1000	76,2	13,5	20,6	14,2
RSM1500	117,3	13,5	20,6	14,2

Collapsed Height A (mm)	Extended Height B (mm)	Outside Diameter D (mm)	Cylinder Bore Dia. E (mm)	Plunger Dia. F (mm)	Base to Advance Port H (mm)	Plunger Protrusion from Base K (mm)	Plunger to Base L (mm)	Plunger to Mtg. Hole M (mm)	Thread O (mm)	Thread Depth P (mm)	Bolt Circle U (mm)	(kg)	Model Number
32	38	58 x 41	28,7	25,4	16	1	20	22	–	–	–	1,0	RSM50 [1]
43	54	82 x 55	42,9	38,1	19	1	27	34	–	–	–	1,4	RSM100 *
51	62	101 x 76	60,5	50,8	19	1	39	39	–	–	–	3,1	RSM200 *
58	71	117 x 95	73,2	63,4	19	2	47	44	–	–	–	4,5	RSM300 *
66	82	140 x 114	88,9	69,8	19	2	57	53	–	–	–	6,8	RSM500 *
79	95	165 x 139	114,3	82,6	19	2	69	66	–	–	–	11,3	RSM750
85	101	178 x 153	127,0	92,2	19	2	76	74	–	–	–	14,5	RSM1000
100	116	215 x 190	158,8	114,3	23	2	95	82	–	–	–	26,3	RSM1500
88	126	69	42,9	38,1	17	5	–	–	M4	8	26	2,7	RCS101 *
98	143	92	60,5	50,8	17	3	–	–	M5	8	40	5,0	RCS201 *
117	179	101	73,2	66,5	19	3	–	–	M5	8	40	6,8	RCS302 *
122	182	124	88,9	69,8	23	2	–	–	M5	8	40	10,0	RCS502 *
141	198	165	127,0	92,2	31	1	–	–	M8	10	55	20,7	RCS1002 *

** 5° angle position of coupler on RCS101, 201, 302.

Tel: +45 63 12 83 00 | Email: ps@hymatik.com | www.hymatik.com | Hvidkaervej 27a, DK-5250 Odense SV, Denmark

RLT-Series, Low-Height Telescopic Cylinders ENERPAC

▼ RLT-Series, Low-Height Telescopic Cylinder



For longer cylinder strokes in confined spaces

- **Single-acting, load-return**
- **Nitrocarburized surface treatment inside and out provides corrosion protection**
- **For use in confined spaces: machinery positioning, tool fastening**
- **Mounting bolt holes for easy fixing**
- **Up to 3% side-load of maximum capacity**
- **Design safety factor complies with ASME B30.1 & EN1494**
- **CR400 coupler for compatibility with standard product**
- **High-Alloy steel for maximum strength.**

RLT-Series, Low-Height Telescopic Cylinders

Enerpac compact, low-height telescopic cylinders are available with two or three pistons, and can lift loads up to 40 mm in a single movement.

Nitrocarburization surface treatment for improved wear resistance and corrosion protection for increased safety and longer service life in harsh conditions.. The longer stroke length of telescopic cylinders will save you time and simplify projects by moving a load a greater distance and eliminating the use of temporary cribbing.

Multi-Stage Cylinders

1st Stage: maximum load capacity at lower stroke.
2nd Stage: extended stroke with lower capacity than the 1st stage.
Final Stage: maximum stroke extension with lowest capacity.



Cylinder Capacity at Maximum Stroke ton (kN)	Maximum Stroke (mm)	Model Number	Collapsed Height A (mm)	Extended Height B (mm)	Oil Capacity (cm^3)
4,4 (43)	17	**RLT40**	45,0	62,0	21
4,4 (43)	23	**RLT41**	54,0	77,0	51
11,4 (111)	18	**RLT110**	54,5	72,5	48
11,4 (111)	40	**RLT111**	89,0	129,0	241
23,7 (232)	27	**RLT230**	75,0	102,0	150
23,7 (232)	32	**RLT231**	96,0	128,0	303
31,5 (309)	29	**RLT311**	89,0	118,0	224
50,6 (496)	26	**RLT501**	96,0	122,0	283
74,1 (727)	26	**RLT741**	114,0	140,0	426

Tel: +45 63 12 83 00 | Email: ps@hymatik.com | www.hymatik.com | Hvidkaervej 27a, DK-5250 Odense SV, Denmark

Low-Height Telescopic Cylinders, Single-Acting



Assisted-return Pumps with Venturi Valve Technology

To improve productivity and plunger retraction, Enerpac offers valve configurations designed to accelerate your cylinder retraction speeds, ZU4 and ZE-Series pumps feature **Venturi Valve Technology** to facilitate the faster return of single-acting load and spring-return cylinders. See enerpac.com for details.

Page: 123



4-way Manifold assembly complete with gauges

Offering ease of portability and convenience with an ergonomic robust design, ready for use. Enerpac's CR400 female couplers on all ports allow the manifold to be quickly connected to up to 4 cylinders. Glycerine filled, 700 bar gauges allow operators to work safely. All protected by the robust protection frame.

Manifold Type (Used for cylinders)	Model Number
4x Single-acting	**AMGC41**
4x Double-acting	**AMGC42**

RLT Series



Capacity:
4,4 - 74,1 ton

Stroke:
17 - 40 mm

Maximum Operating Pressure:
700 bar

WARNING:
If several telescopic cylinders need to be controlled simultaneously Enerpac recommend the use of EVO-Series Synchronous Lifting Pumps. Enerpac advise not to use SFP-Series Split-Flow pumps to operate several telescopic cylinders at a time due to the volume difference on the different stages.

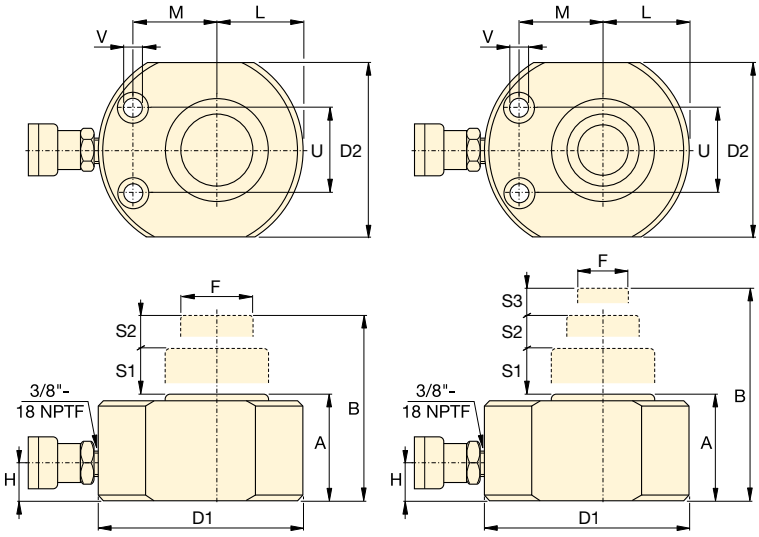

RLT-Cylinders
Mounting Hole Dimensions (mm)

Model Number	Bolt Distance U	Hole Diameter V	Counter Bore Diameter	Counter Bore Depth
RLT40	37	6,5	11	7
RLT41	50	9,0	14	9
RLT110	50	9,0	14	9
RLT111	76	13,0	20	13
RLT230	67	13,0	20	13
RLT231	76	6,5	11	7
RLT311	76	13,0	20	13
RLT501	76	6,5	11	7
RLT741	117	9,0	14	9

1st Stage Capacity ton (kN)	1st Stage Stroke S1 (mm)	2nd Stage Capacity ton (kN)	2nd Stage Stroke S2 (mm)	3rd Stage Capacity ton (kN)	3rd Stage Stroke S3 (mm)	Outside Diameter D1 x D2 (mm)	Plunger Diameter F (mm)	Bottom to Advance Port H (mm)	Plunger to Base L (mm)	Plunger to Mounting Hole M (mm)	(kg)	Model Number
11,4 (111)	11	**4,4** (43)	6	-	–	83 x 56	25	20	29,0	33	1,8	**RLT40**
23,7 (232)	11	**11,4** (111)	7	**4,4** (43)	5	102 x 80	25	20	41,0	39	3,1	**RLT41**
23,7 (232)	11	**11,4** (111)	7	-	–	102 x 80	38	20	41,0	39	3,0	**RLT110**
74,1 (727)	16	**31,5** (309)	13	**11,4** (111)	11	165 x 140	38	25	70,5	66	13,1	**RLT111**
50,6 (496)	16	**23,7** (232)	11	-	–	140 x 114	57	20	58,0	56	7,6	**RLT230**
94,7 (929)	16	**50,6** (496)	10	**23,7** (232)	6	178 x 162	57	29	89,0	70	17,3	**RLT231**
74,1 (727)	16	**31,5** (309)	13	-	–	165 x 140	60	25	70,5	66	13,0	**RLT311**
94,7 (929)	16	**50,6** (496)	10	-	–	178 x 162	78	29	89,0	70	17,3	**RLT501**
143,5 (1407)	16	**74,1** (727)	10	-	–	216 x 196	95	35	108,0	78	30,4	**RLT741**

RT-Series, Multi-Stage Telescopic Cylinders

ENERPAC

▼ RT3311 Telescopic Cylinder (shown with plunger extended and retracted)



- **Nitrocarburized surface treatment inside and out provides corrosion protection**
- **3% side-load of full capacity**
- **Double or triple wear bearings support lifting stages**
- **Tilting saddles with 5 degrees of maximum tilt standard on all models**
- **Design Safety factor complies with ASME B30.1 & EN1494**
- **Certified lifting eyes for safe handling and positioning**
- **CR400 coupler for compatibility with standard product**
- **Steel cylinder base for maximum strength.**

Moving a load a greater distance

RT-Series, Multi-Stage Cylinders

Enerpac compact, multi-stage telescopic cylinders are available with two or three pistons, and can lift loads up to 600 mm in a single movement.

Nitrocarburized surface treatment inside and out provides unparalleled sideload resistance and corrosion protection for safe use in the harshest conditions. The longer stroke length of telescopic cylinders will save you time and simplify projects by moving a load a greater distance and eliminating the use of temporary cribbing.

Multi-Stage Cylinders

1st Stage: maximum load capacity at lowest maximum stroke
2nd Stage: extended stroke but at lower maximum capacity than the 1st stage
Final Stage: maximum stroke extension but lowest maximum capacity.

WARNING: If several telescopic cylinders need to be controlled simultaneously Enerpac recommend the use of EVO or EVOB-Series Synchronous Lifting Pumps. Enerpac advise not to use SFP-Series Split-Flow pumps to operate several telescopic cylinders at a time due to the volume difference on the different stages.



Tilt Saddles

All RT-Series cylinders include integral tilt saddles with maximum tilt angles up to 5 degree.



◀ *The longer stroke length of telescopic cylinders will save you time and simplify projects by moving a load a greater distance and eliminating the use of temporary cribbing.*

Cylinder Capacity at Maximum Stroke ton (kN)	Maximum Stroke (mm)	Model Number	Collapsed Height A (mm)	Extended Height B (mm)
14,0 (137)	270	**RT1510**	283	553
17,0 (166)	435	**RT1817**	345	780
20,2 (198)	300	**RT2111**	317	617
	500	**RT2119**	395	895
31,5 (309)	300	**RT3311**	352	652
	600	**RT3323**	476	1076

Multi-Stage Telescopic Cylinders, Single-Acting, Load Return

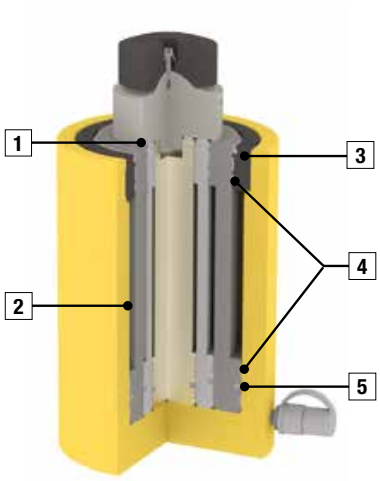

1. **Wiper Ring** on each stage to minimize contamination.
2. **Nitrocarburized Coating** for maximum corrision protection and surface hardness. Exterior in nitrided and Enerpac yellow epoxy.
3. **Stop Ring** full load capable to prevent plunger overstroke.
4. **Wear Bearings**. Double or triple wear bearings for maximum sideload capability and wear resistance.
5. **Seals** for maximum compliance and high wear resistance.

RT Series



Capacity:
14 - 31,5 ton

Stroke:
270 - 600 mm

Maximum Operating Pressure:
700 bar

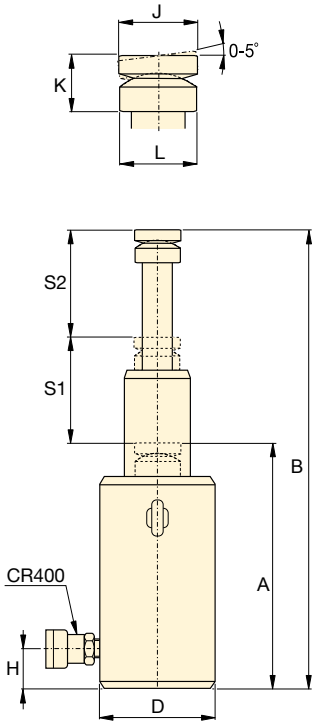

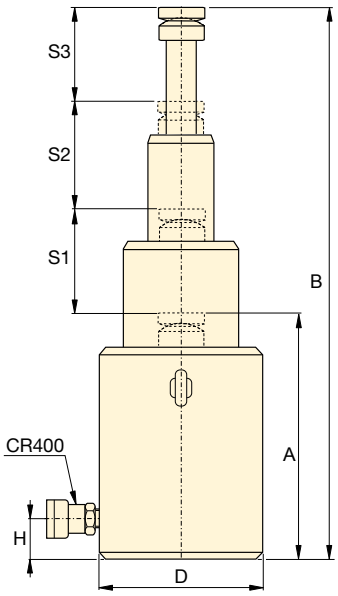



Assisted-return Pumps with Venturi Valve Technology

To improve productivity and plunger retraction, Enerpac offers valve configurations designed to accelerate your cylinder retraction speeds, ZU4 and ZE-Series pumps feature **Venturi Valve Technology** to facilitate the faster return of single-acting load and spring-return cylinders. See enerpac.com for details.

Page: 123



Hoses

Enerpac offers a complete line of high quality hydraulic hoses. To ensure the integrity of your system, specify only Enerpac hydraulic hoses.

Page: 128

	Oil Capacity	1st Stage		2nd Stage		3rd Stage		Outside Diameter	Bottom to Advance Port	Saddle Diameter	Saddle Protrusion from Plgr.	Saddle Support Diameter		Model Number
		Capacity	Stroke S1	Capacity	Stroke S2	Capacity	Stroke S3	D	H	J	K	L		
	(cm^3)	ton (kN)	(mm)	ton (kN)	(mm)	ton (kN)	(mm)	(mm)	(mm)	(mm)	(mm)	(mm)	(kg)	
	944	**36** (352)	135	**14** (137)	135	–	–	110	20	60	49	60	15,1	**RT1510**
	3092	**95** (929)	145	**41** (397)	145	**17,0** (166)	145	170	27	80	73	85	40,3	**RT1817**
	1487	**51** (496)	150	**20** (198)	150	–	–	125	23	60	53	66	21,8	**RT2111**
	4661	**126** (1237)	170	**51** (496)	170	**20,2** (198)	160	200	34	90	83	100	67,3	**RT2119**
	2359	**81** (792)	150	**32** (309)	150	–	–	160	25	80	66	89	39,9	**RT3311**
	8816	**202** (1985)	200	**81** (792)	200	**31,5** (309)	200	250	44	110	111	123	124,0	**RT3323**

Tel: +45 63 12 83 00 | Email: ps@hymatik.com | www.hymatik.com | Hvidkaervej 27a, DK-5250 Odense SV, Denmark

BRC, BRP-Series, Pull Cylinders

ENERPAC

▼ Shown from left to right: **BRC25, BRC46, BRP306, BRP606, BRP106C**



The Ultimate in Pulling Power

- **High strength alloy steel construction**
- **Hard chrome-plated plunger for long life**
- **Replaceable links on BRP-models**
- **Baked enamel finish for increased corrosion resistance**
- **CR400 coupler and dust cap included on all models**
- **Plunger wiper reduces contamination, extending cylinder life**
- **Single-acting, spring return.**



Gauges

Minimize the risk of overloading and ensure long, dependable service from your equipment. Refer to the System Components Section for a full range of gauges.

Page: 127



Attachments and Accessories

BRC25 and BRC46 units have base, collar and plunger threads to affix a range of optional attachments and accessories, such as chains, saddles and extension tubes.

Page: 175

▼ *Lifting mining conveyor belt using pull cylinders for bearing maintenance.*



▼ *To lift a load bearing mast into place, BRP-Series cylinders were used to tension the supporting cables.*



Single-Acting, Pull Cylinders

BRC Cylinder Mounting Dimensions (mm)				
Model Number	Base Mounting Hole V	Collar Thread W	Collar Thd. Lgth. X	Mtg. Thd. Lgth. Z
BRC-25	¾"-14 NPT	1½"- 16 UN	24	17
BRC-46	1¼"-11½ NPT	2¼"- 14 UN	26	24
BRC-106	M30 x 2	M85 x 2	25	24

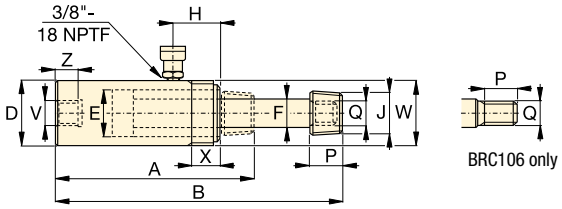

BRC25, 46, 106

BRC, BRP Series



Capacity:
2,5 - 50 ton

Stroke:
127 - 154 mm

Maximum Operating Pressure:
700 bar

Cylinder Capacity ton (kN)	Stroke (mm)	Model Number	Cylinder Effective Area (cm^2)	Oil Capacity (cm^3)	Coll. Height A (mm)	Ext. Height B (mm)	Outside Dia. D (mm)	Cylinder Bore Dia. E (mm)	Plunger Dia. F (mm)	Top to Inlet Port H (mm)	Saddle Diameter J (NPT)	Plunger Thread Length P (mm)	Plunger Outside Thread Q	(kg)
2,5 (24)	127	**BRC25**	3,5	45	264	391	48	28,4	19,0	45	¾"- 14	28	$^{11}/_{16}$"- 24	1,8
5 (51)	140	**BRC46**	7,3	101	301	441	57	42,9	30,2	42	1¼"- 11½	32	$1^{3}/_{16}$"- 16	4,5
10 (105)	151	**BRC106**	15,0	228	289	440	85	54,1	31,8	39	–	25	M30x2	9,5

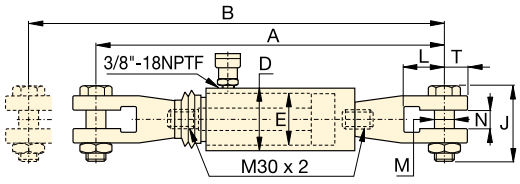

BRP106C

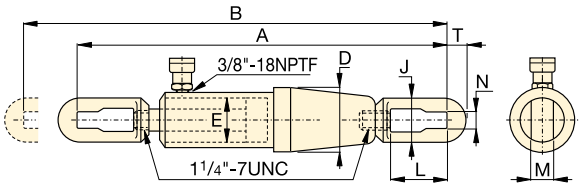

BRP306

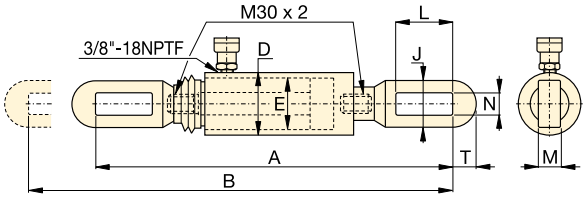

BRP106L

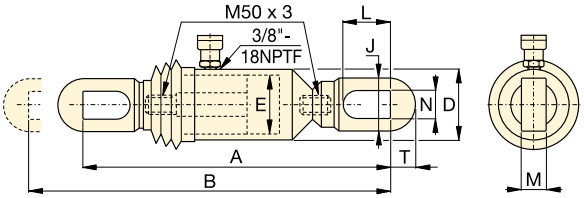

BRP606

Cylinder Capacity ton (kN)	Stroke (mm)	Model Number	Cylinder Effective Area (cm^2)	Oil Capacity (cm^3)	Coll. Height A (mm)	Ext. Height B (mm)	Outside Dia. D (mm)	Cyl. Bore Dia. E (mm)	Link Height J (mm)	Link Opening L (mm)	Link Thickness M (mm)	Link Width N (mm)	Slot to Link End T (mm)	(kg)
10 (110)	150	**BRP106C**	15,8	238	601	751	85	54,1	105	87	30	35	32	15,3
	150	**BRP106L**	15,8	238	573	723	85	54,1	64	119	22	30	32	13,3
30 (325)	154	**BRP306**	46,4	715	1110	1264	137	88,9	114	155	35	39	55	63,1
50 (506)	153	**BRP606**	72,1	1096	718	871	140	110,1	130	151	40	48	65	58,3

RCH-Series, Hollow Plunger Cylinders

ENERPAC

▼ Shown from left to right: **RCH306, RCH120, RCH1003**



- **Hollow plunger design allows for both, pull and push forces**
- **Single-acting, spring return**
- **Nickel-plated, floating center tube on models over 20 ton increases product life**
- **Baked enamel finish for increased corrosion resistance**
- **Collar threads for easy fixturing**
- **RCH120 includes AR630 coupler and has 1/4" NPTF port**
- **RCH121 and RCH1211 have FZ1630 reducer and AR630 coupler, all other models feature CR400 coupler.**

Versatility in Testing, Maintenance and Tensioning Applications

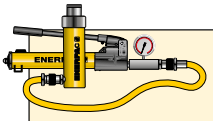

Cylinder-Pump Sets

All cylinders marked with an * are available as **sets** (cylinder, gauge, couplers, hose and pump) for your ordering convenience.

Page: 62



Ultra-Lightweight Aluminium Cylinders

If you need a higher cylinder capacity-to-weight-ratio the lightweight **RACH-Series** are the perfect choice.

Page: 16



Saddles

Most RCH-Series cylinders are equipped with smooth saddles. See table at next page for optional threaded saddles and all dimensional information.

Page: 35

▼ *Hollow plunger cylinder RCH1003 used in an application for intermediate boom suspension on a dragline.*



Cylinder Capacity ton (kN)	Stroke (mm)	Model Number	Cylinder Effective Area (cm^2)	Oil Capacity (cm^3)
12 (125)	8	**RCH120**	17,9	14
	42	**RCH121 ***	17,9	75
	42	**RCH1211**	17,9	75
	76	**RCH123**	17,9	136
20 (215)	49	**RCH202 ***	30,7	150
	155	**RCH206**	30,7	476
30 (326)	64	**RCH302 ***	46,6	298
	155	**RCH306**	46,6	722
60 (576)	76	**RCH603 ***	82,3	626
	153	**RCH606**	82,3	1259
95 (931)	76	**RCH1003 ***	133,0	1011

* Available as set, see note on this page.

Single-Acting, Hollow Plunger Cylinders



Hoses

Enerpac offers a complete line of high quality hydraulic hoses. To ensure the integrity of your system, specify only Enerpac hydraulic hoses.

Page: 128

RCH Series



Capacity:
12 - 95 ton

Stroke:
8 - 155 mm

Center Hole Diameter:
19,5 - 79,0 mm

Maximum Operating Pressure:
700 bar

Optional Threaded Hollow Saddles

Saddle Type	Cylinder Model Number	Saddle Model Nr.	Saddle Dimensions (mm) A	B	C
Threaded Hollow	RCH202, 206	HP2015	53	1"- 8	9
	RCH302, 306	HP3015	63	1¼"- 7	9
	RCH603, 606	HP5016	91	1⅝"- 5½	12
	RCH1003	HP10016	126	2½"- 8	13

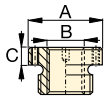

Smooth hollow saddles are standard on all RCH-models (except RCH120, RCH1211).

RCH121 and RCH1211 have a 47 mm dia. boss that protrudes 6 mm from base.

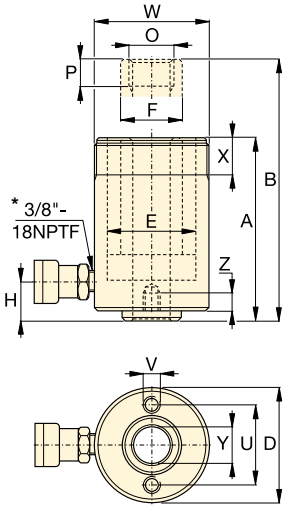

RCH120 to RCH123 models

* 1/4" NPTF for RCH120 only

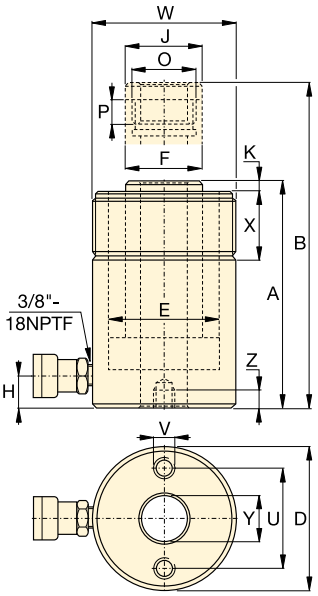

RCH202 to RCH1003 models

Base Mounting Hole Dimensions (mm)

Model Number	Bolt Circle U	Thread V	Thread Depth Z
RCH120	50,8	5/16"- 18 UNC	9,0
RCH121	–	–	–
RCH1211	–	–	–
RCH123	50,8	5/16"- 18 UNC	12,7
RCH202	82,6	3/8"- 16 UNC	9,4
RCH206	82,6	3/8"- 16 UNC	9,4
RCH302	92,2	3/8"- 16 UNC	14,0
RCH306	92,2	3/8"- 16 UNC	14,0
RCH603	130,3	½"- 13 UNC	14,0
RCH606	130,3	½"- 13 UNC	14,0
RCH1003	177,8	5/8"- 11 UNC	19,0

	Coll. Height A (mm)	Ext. Height B (mm)	Outside Dia. D (mm)	Cyl. Bore Dia. E (mm)	Plgr. Dia. F (mm)	Cyl. Base to Advance Port H (mm)	Saddle Dia. J (mm)	Saddle Protrusion from Plgr. K (mm)	Plunger Internal Thread O	Plunger Thread Length P (mm)	Collar Thread W	Collar Thread Length X (mm)	Center Hole Dia. Y (mm)	(kg)	Model Number
	55	63	69	54,1	35,1	9	–	–	¾"- 16 UN	16	2¾"- 16	30	19,5	1,5	RCH120
	120	162	69	54,1	35,1	25	–	–	–	–	2¾"- 16	30	19,5	2,8	RCH121 *
	120	162	69	54,1	35,1	25	–	–	¾"- 16 UN	16	2¾"- 16	30	19,5	2,8	RCH1211
	184	260	69	54,1	35,1	25	–	–	–	–	2¾"- 16	30	19,5	4,4	RCH123
	162	211	98	73,1	54,1	19	54	9,7	1 9/16"- 16 UN	19	3⅞"- 12	38	26,9	7,7	RCH202 *
	306	461	98	73,1	54,1	25	54	9,7	1 9/16"- 16 UN	19	3⅞"- 12	38	26,9	14,1	RCH206
	178	242	114	88,9	63,5	21	63	9,0	1 13/16"- 16 UN	22	4½"- 12	42	33,3	10,9	RCH302 *
	330	485	114	88,9	63,5	25	63	9,0	1 13/16"- 16 UN	22	4½"- 12	42	33,3	21,8	RCH306
	247	323	159	123,9	91,9	31	91	12,0	2¾"- 16 UN	19	6¼"- 12	48	53,8	28,1	RCH603 *
	323	476	159	123,9	91,9	31	91	12,0	2¾"- 16 UN	19	6¼"- 12	48	53,8	35,4	RCH606
	254	330	212	165,1	127,0	38	126	12,0	4"- 16 UN	25	8⅜"- 12	60	79,0	63,0	RCH1003*

RRH-Series, Hollow Plunger Cylinders

ENERPAC

▼ Shown from left to right: **RRH3010, RRH1001, RRH6010**



Versatility in Testing, Maintenance and Tensioning Applications

- **Relief valves prevent damage in case of over-pressurisation**
- **Baked enamel finish for increased corrosion resistance**
- **Collar threads enable easy fixturing (except RRH1001 and RRH1508)**
- **Double-acting version for fast retraction**
- **Nickel-plated, floating center tube increases product life**
- **Hollow plunger allows for both pull and push forces**
- **CR400 coupler and dust cap included on all models**
- **Plunger wiper reduces contamination, extending cylinder life.**



Ultra-Lightweight Aluminium Cylinders

If you need a higher cylinder capacity-to-weight-ratio the lightweight **RARH-Series** are the perfect choice.

Page: 18



Gauges

Minimize the risk of overloading and ensure long, dependable service from your equipment. Refer to the System Components Section for a full range of gauges.

Page: 127



Saddles

All RRH-Series cylinders are equipped with smooth saddles. See table at next page for optional threaded saddles and all dimensional information.

Page: 37

▼ *Double-acting hollow plunger cylinders are applied for bridge launching systems.*



Cylinder Capacity ton	Stroke (mm)	Model Number	Max. Cylinder Capacity (kN) Advance	Max. Cylinder Capacity (kN) Retract	Cylinder Effective Area (cm^2) Advance	Cylinder Effective Area (cm^2) Retract	Oil Capacity (cm^3) Advance	Oil Capacity (cm^3) Retract
30	178	**RRH307**	326	213	46,6	30,4	829	541
	258	**RRH3010**	326	213	46,6	30,4	1202	784
60	89	**RRH603**	576	380	82,3	54,2	733	482
	166	**RRH606**	576	380	82,3	54,2	1366	900
	257	**RRH6010**	576	380	82,3	54,2	2115	1393
95	38	**RRH1001**	931	612	133,0	87,4	505	333
	76	**RRH1003**	931	612	133,0	87,4	1011	666
	153	**RRH1006**	931	612	133,0	87,4	2035	1337
	257	**RRH10010**	931	612	133,0	87,4	3420	2246
145	203	**RRH1508**	1429	718	204,1	102,6	4144	2083

Tel: +45 63 12 83 00 | Email: ps@hymatik.com | www.hymatik.com | Hvidkaervej 27a, DK-5250 Odense SV, Denmark

Double-Acting, Hollow Plunger Cylinders



Hoses

Enerpac offers a complete line of high quality hydraulic hoses. To ensure the integrity of your system, specify only Enerpac hydraulic hoses.

Page: 128

RRH Series



Capacity:
30 - 145 ton

Stroke:
38 - 258 mm

Center Hole Diameter:
33,3 - 79,2 mm

Maximum Operating Pressure:
700 bar

Optional Threaded Hollow Saddles

Saddle Type	Cylinder Model Number	Saddle Model Nr.	Saddle Dimensions (mm) A	B	C
Threaded Hollow	RRH307, 3010	HP3015	63	1¼"- 7	9
	RRH603, 606, 6010	HP5016	91	1⅝"- 5½	12
	RRH1001, 1003, RRH1006, 10010	HP10016	126	2½"- 8	13

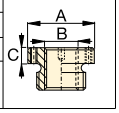

Smooth hollow saddles are standard on all RRH-models.

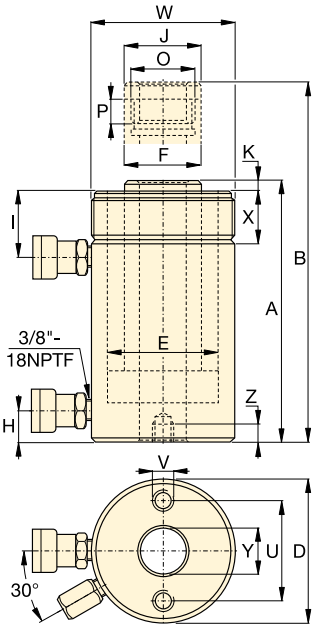

Pump Selection

A double-acting cylinder must be powered by a pump with a 4-way valve.

Page: 121

Base Mounting Hole Dimensions (mm)

Model Number	Bolt Circle U	Thread V	Thread Depth Z
RRH307	92,2	⅜" - 16 UNC	15,7
RRH3010	92,2	⅜" - 16 UNC	15,7
RRH603	130,0	½" - 13 UNC	14,0
RRH606	130,0	½" - 13 UNC	14,0
RRH6010	130,0	½" - 13 UNC	14,0
RRH1001	177,8	⅝" - 11 UNC	19,0
RRH1003	177,8	⅝" - 11 UNC	19,0
RRH1006	177,8	⅝" - 11 UNC	19,0
RRH10010	177,8	⅝" - 11 UNC	19,0
RRH1508	213,4	⅝" - 11 UNC	23,0

Coll. Height A (mm)	Ext. Height B (mm)	Out. Dia. D (mm)	Cyl. Bore Dia. E (mm)	Plgr. Dia. F (mm)	Cyl. Base to Adv. Port H (mm)	Cyl. Top to Return Port I (mm)	Saddle Dia. J (mm)	Saddle Protr. fr. Plgr. K (mm)	Thread O	Plunger Thread Length P (mm)	Collar Thread W	Collar Thread Length X (mm)	Center Hole Dia. Y (mm)	(kg)	Model Number
330	508	114	88,9	63,5	25	60	63	9	1 13/16"- 16	22	4½"- 12	42	33,3	21	RRH307
431	689	114	88,9	63,5	25	60	63	9	1 13/16"- 16	22	4½"- 12	42	33,3	27	RRH3010
247	336	159	123,9	91,9	31	66	91	12	2¾"- 16	19	6¼"- 12	48	53,8	28	RRH603
323	489	159	123,9	91,9	31	66	91	12	2¾"- 16	19	6¼"- 12	48	53,8	35	RRH606
438	695	159	123,9	91,9	31	66	91	12	2¾"- 16	19	6¼"- 12	48	53,8	45	RRH6010
165	203	212	165,1	127,0	38	44	126	12	4"- 16	25	–	–	79,2	33	RRH1001
254	330	212	165,1	127,0	38	85	126	12	4"- 16	25	8⅜"- 12	60	79,2	61	RRH1003
342	495	212	165,1	127,0	38	85	126	12	4"- 16	25	8⅜"- 12	60	79,2	79	RRH1006
460	717	212	165,1	127,0	38	85	126	12	4"- 16	25	8⅜"- 12	60	79,2	106	RRH10010
349	552	247	190,5	152,4	38	60	127	4	4¼"- 12	25	–	–	79,2	111	RRH1508

BRD-Series, Precision Production Cylinders

ENERPAC

▼ Shown from left to right: **BRD2510, BRD96, BRD256, BRD41, BRD166**



High Precision and High Cycle Performance

Speed Chart

See the Enerpac Cylinder Speed Chart in our 'Yellow Pages' to determine your approximate cylinder speed.

Page: 405

- **Designed for long life, the best choice for production applications**
- **Unique mounting configurations simplify fixturing**
- **Baked enamel finish for increased corrosion resistance**
- **Double-acting operation develops force in both directions, providing maximum versatility**
- **Plunger wiper reduces contamination, extending cylinder life**
- **Imperial models (RD-series) available on request.**

▼ *Clamping application using Enerpac BRD cylinders (with clevis eye attachments on both ends) for their high pressure capability and mounting flexibility.*



Cylinder Capacity (ton)	Stroke (mm)	Model Number	Max. Cylinder Capacity (kN)		Cylinder Effective Area (cm^2)		Oil Capacity (cm^3)		Coll. Height A (mm)	Extended Height B (mm)	Body Length C (mm)	Outside Dia. D (mm)	Cylinder Bore Dia. E (mm)	Plunger Dia. F (mm)
			Advance	Retract	Advance	Retract	Advance	Retract						
4	28	BRD41	35	16	5,1	2,2	14	6	186	214	162	50	25,4	19,0
	79	BRD43	35	16	5,1	2,2	40	17	237	316	213	50	25,4	19,0
	155	BRD46	35	16	5,1	2,2	79	34	313	468	289	50	25,4	19,0
8	28	BRD91	80	44	11,4	6,3	32	18	223	251	198	63,5	38,1	25,4
	79	BRD93	80	44	11,4	6,3	90	50	274	353	249	63,5	38,1	25,4
	155	BRD96	80	44	11,4	6,3	177	98	350	505	325	63,5	38,1	25,4
	257	BRD910	80	44	11,4	6,3	293	162	452	709	427	63,5	38,1	25,4
15	159	BRD166	142	77	20,3	10,6	323	169	389	548	359	80	50,8	35,0
	260	BRD1610	142	77	20,3	10,6	528	276	491	751	461	80	50,8	35,0
23	159	BRD256	222	98	31,7	13,7	504	218	424	583	397	92	63,5	47,8
	260	BRD2510	222	98	31,7	13,7	824	356	526	786	499	92	63,5	47,8

Double-Acting, Precision Production Cylinders

▼ BRD CYLINDER ATTACHMENTS



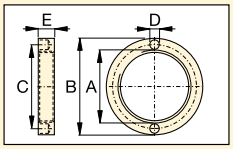

Retainer Nut
For locking foot or flange mountings. Tightens onto cylinder collar threads (Included with foot and flange mounting kits).

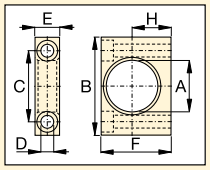

Foot Mounting
Mounts onto cylinder collar.

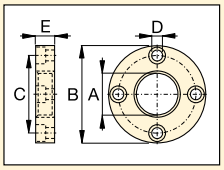

Flange Mounting
Mounts onto cylinder collar.

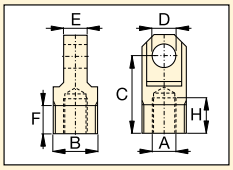

Clevis Eye
Threads onto plunger or into cylinder base.

Model Number	BRD-Cyl. (ton)	Dimensions (mm) A	B	C	D	E	F	H
Foot Mounting with Retainer Nut								
BAD141	**4**	42,1	80	58,0	10,5	20,0	57,0	31,8
BAD171	**8**	56,1	105	78,0	13,5	25,0	82,5	44,5
BAD181	**15**	70,1	127	95,2	20,0	35,0	100,0	52,4
BAD191	**23**	85,1	159	117,5	26,5	45,0	125,0	63,5
Flange Mounting with Retainer Nut								
BAD142	**4**	42,1	98,4	78,6	11,0	19,0	–	–
BAD172	**8**	56,1	121	98,4	11,0	25,4	–	–
BAD182	**15**	70,1	143	115,9	14,0	35,0	–	–
BAD192	**23**	85,1	165	135,7	17,0	44,5	–	–
Retainer Nut								
BAD143	**4**	M42 x 1,5	57	49,5	6,3	9,5	–	–
BAD173	**8**	M56 x 2	75	65,5	6,7	12,7	–	–
BAD183	**15**	M70 x 2	92	81,0	6,7	19,0	–	–
BAD193	**23**	M85 x 2	108	96,5	6,7	25,4	–	–
Clevis Eye (See chart below for mounting dimensions L, L1 and M)								
BAD150	**4**	M16 x 1,5	M30 x 1,5	52,4	16,0	15,9	19,1	23,8
BAD151	**8**	M22 x 1,5	M42 x 1,5	57,1	20,0	25,4	25,4	23,8
BAD152	**15**	M30 x 1,5	M56 x 2	77,8	25,0	31,8	25,4	30,2
BAD153	**23**	M42 x 1,5	M70 x 2	77,8	32,0	38,2	25,4	27,0

BRD Series



Capacity:
4 - 23 ton

Stroke:
28 - 260 mm

Maximum Operating Pressure:
700 bar

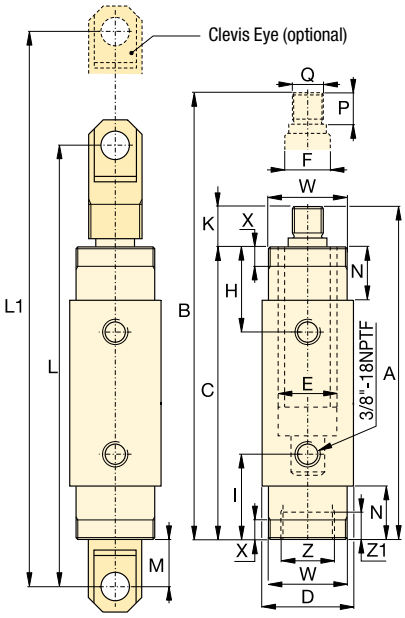

Top to Retract Port H (mm)	Bottom to Advance Port I (mm)	Plunger Protrusion K (mm)	Clevis Eye Mounting Dimensions L (mm)	L1 (mm)	M (mm)	Neck Length N (mm)	Plunger Thread Length P (mm)	Plunger External Thread Q (mm)	Cylinder Mounting Dimensions (mm) Collar Thread W	Collar Thread Length X	Internal Base Thread Z	Int. Base Thread Length Z1	(kg)	Model Number
47	47	24	258	286	41	29	22	M16 x 1,5	M42 x 1,5	11	M30 x 1,5	9	2,0	**BRD41**
47	47	24	308	387	41	29	22	M16 x 1,5	M42 x 1,5	11	M30 x 1,5	9	2,6	**BRD43**
47	47	24	385	540	41	29	22	M16 x 1,5	M42 x 1,5	11	M30 x 1,5	9	3,6	**BRD46**
57	57	25	295	323	38	38	22	M22 x 1,5	M56 x 2	14	M42 x 1,5	14	3,0	**BRD91**
57	57	25	346	425	38	38	22	M22 x 1,5	M56 x 2	14	M42 x 1,5	14	4,2	**BRD93**
57	57	25	422	577	38	38	22	M22 x 1,5	M56 x 2	14	M42 x 1,5	14	5,6	**BRD96**
57	57	25	524	781	38	38	22	M22 x 1,5	M56 x 2	14	M42 x 1,5	14	7,3	**BRD910**
73	73	30	492	651	52	54	28	M30 x 1,5	M70 x 2	22	M56 x 2	24	10,2	**BRD166**
73	73	30	593	853	52	54	28	M30 x 1,5	M70 x 2	22	M56 x 2	24	14,5	**BRD1610**
89	89	27	524	683	53	70	25	M42 x 1,5	M85 x 2	29	M70 x 2	26	16,0	**BRD256**
89	89	27	626	886	53	70	25	M42 x 1,5	M85 x 2	29	M70 x 2	26	20,3	**BRD2510**

Tel: +45 63 12 83 00 | Email: ps@hymatik.com | www.hymatik.com | Hvidkaervej 27a, DK-5250 Odense SV, Denmark

RR-Series, Double-Acting Cylinders

ENERPAC

▼ Shown from left to right: **RR10013, RR1502, RR20013, RR1010, RR7513**



- **Collar threads, plunger threads and base mounting holes for easy fixturing (on most models)**
- **Baked enamel finish for increased corrosion resistance**
- **Removable hardened saddles protect plunger during lifting and pressing**
- **Built-in safety valve prevents accidental over-pressurization**
- **CR400 couplers and dust caps included on all models**
- **Plunger wiper reduces contamination, extending cylinder life.**

Most Versatile Performers

Rugged enough for the toughest job site uses and precision designed for high-cycle industrial uses.



Optional Snap-in Saddles

Optional snap-in saddles for RR-Series double-acting cylinders up to 75 ton.

Page: 41



Optimum Performance

Enerpac's range of Z-Class electric pumps, fitted with manual or solenoid operated 4-way valves, offer optimum combinations with RR-Series cylinders.

Page: 96

▼ *A lateral bridge slide method was utilized to the slide the new bridge into position. Two RR-Series double acting hydraulic cylinders with ZU4-Series electric pumps were used to push the bridge into position over PTFE sliding elements.*



▼ *RR-cylinders provide power and precision in a special hydraulic press.*



Double-Acting Long Stroke Cylinders

Pump Selection

A double-acting cylinder must be powered by a pump with a 4-way valve.

Page: 75

▼ QUICK SELECTION CHART

For complete technical information see next page.

Cylinder Capacity ton (kN)	Stroke (mm)	Model Number	Cylinder Effective Area (cm^2) Push	Cylinder Effective Area (cm^2) Pull	Oil Capacity (cm^3) Push	Oil Capacity (cm^3) Pull	Coll. Height (mm)
10 (101)	254	**RR1010**	14,5	4,8	368	122	409
	305	**RR1012**	14,5	4,8	442	147	457
30 (295)	209	**RR308**	42,1	19,1	879	400	394
	368	**RR3014**	42,1	19,1	1549	703	549
50 (498)	156	**RR506**	71,2	21,5	1111	335	331
	334	**RR5013**	71,2	21,5	2378	718	509
	511	**RR5020**	71,2	21,5	3638	1099	733
75 (718)	156	**RR756**	102,6	31,4	1601	490	347
	333	**RR7513**	102,6	31,4	3417	1046	525
95 (933)	168	**RR1006**	133,3	62,2	2238	1045	357
	333	**RR10013**	133,3	62,2	4439	2071	524
	460	**RR10018**	133,3	62,2	6132	2861	687
140 (1386)	57	**RR1502**	198,1	95,4	1129	544	183
	156	**RR1506**	198,1	95,4	3090	1488	385
	333	**RR15013**	198,1	95,4	6597	3177	582
	815	**RR15032**	198,1	95,4	16.145	7775	1116
200 (1995)	152	**RR2006**	285,0	145,3	4332	2209	430
	330	**RR20013**	285,0	145,3	9405	4795	608
	457	**RR20018**	285,0	145,3	13.025	6640	765
	610	**RR20024**	285,0	145,3	17.385	8863	917
	914	**RR20036**	285,0	145,3	26.049	13.280	1222
	1219	**RR20048**	285,0	145,3	34.741	17.712	1527
325 (3201)	153	**RR3006**	457,3	243,2	6997	3721	485
	305	**RR30012**	457,3	243,2	13.947	7418	638
	457	**RR30018**	457,3	243,2	20.889	11.114	790
	609	**RR30024**	457,3	243,2	27.850	14.811	943
	915	**RR30036**	457,3	243,2	41.843	22.253	1247
	1219	**RR30048**	457,3	243,2	55.745	29.646	1552
440 (4292)	152	**RR4006**	613,1	328,1	9319	4987	538
	305	**RR40012**	613,1	328,1	18.700	10.007	690
	457	**RR40018**	613,1	328,1	28.018	14.995	843
	610	**RR40024**	613,1	328,1	37.400	20.014	995
	914	**RR40036**	613,1	328,1	56.037	29.988	1300
	1219	**RR40048**	613,1	328,1	74.737	39.996	1605
520 (5108)	153	**RR5006**	729,7	405,4	11.164	6203	577
	305	**RR50012**	729,7	405,4	22.256	12.365	730
	457	**RR50018**	729,7	405,4	33.347	18.526	882
	609	**RR50024**	729,7	405,4	44.440	24.689	1035
	915	**RR50036**	729,7	405,4	66.768	36.973	1339
	1219	**RR50048**	729,7	405,4	88.951	49.418	1644

RR Series



Capacity:
10 - 520 ton

Stroke:
57 - 1219 mm

Maximum Operating Pressure:
700 bar

Enerpac HCR-Series

If your application does not require high cycle, Enerpac **HCR-Series** cylinders may be the right alternative.

Page: 52

Speed Chart

See the Enerpac Cylinder Speed Chart in our 'Yellow Pages' to determine your approximate cylinder speed.

Page: 405

Optional Snap-in Saddles

Optional snap-in saddles for RR-Series double-acting cylinders:

Saddle Type	Cylinder Model	Saddle Model Number
Flat	RR10	**A102F**
Tilt	RR10	**CATS12**
	RR30	**CATS52**
	RR50	**CATS100**
	RR75	**CATS100**

Standard Saddles:

Grooved	RR10	**A102G**
	RR30	**A252G**

For additional information on saddles:

Page: 10

RR-Series, Double-Acting Cylinders

ENERPAC

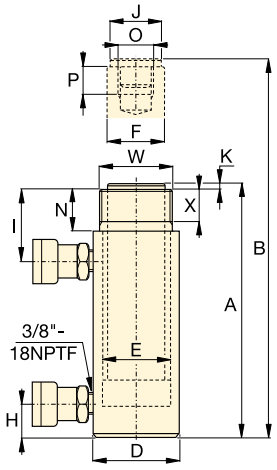

RR1010 - RR3014

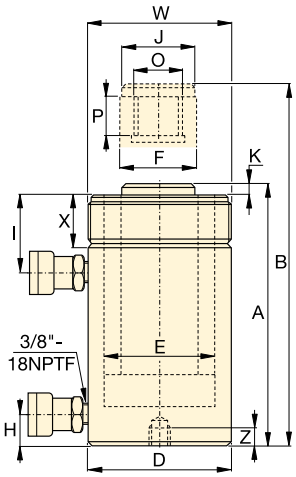

RR506 - RR50048

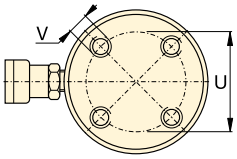

RR1006 - RR30048

No mounting holes on:
RR506, 5013
RR756, 7513
RR1502, 15032

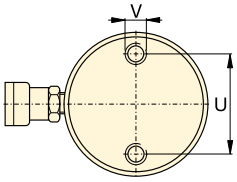

RR4006 - RR50048

Base mounting hole location is for reference only, as it is affected by assembly.

Cylinder retract capacity for certain RR cylinders may be less than theoretical values, as a result of reduced relief valve pressure settings:

RR308/3014:	275 bar
RR506/5013/5020:	480 bar
RR756/7513:	495 bar

◀ For full features see previous page.

Cylinder Capacity ton	Stroke (mm)	Model Number	Max. Cylinder Capacity (kN) Push	Max. Cylinder Capacity (kN) Pull	Cylinder Effective Area (cm^2) Push	Cylinder Effective Area (cm^2) Pull	Oil Capacity (cm^3) Push	Oil Capacity (cm^3) Pull	Coll. Height A (mm)	Ext. Height B (mm)	Outside Dia. D (mm)
10	254	RR1010 *	101	33	14,5	4,8	368	122	409	663	73
	305	RR1012 *	101	33	14,5	4,8	442	147	457	762	73
30	209	RR308 *	295	53	42,1	19,1	879	400	394	603	101
	368	RR3014 *	295	53	42,1	19,1	1549	703	549	917	101
50	156	RR506	498	103	71,2	21,5	1111	335	331	487	127
	334	RR5013	498	103	71,2	21,5	2378	718	509	843	127
	511	RR5020	498	103	71,2	21,5	3638	1099	733	1244	127
75	156	RR756	718	156	102,6	31,4	1601	490	347	503	146
	333	RR7513	718	156	102,6	31,4	3417	1046	525	858	146
95	168	RR1006	933	435	133,3	62,2	2238	1045	357	525	177
	333	RR10013	933	435	133,3	62,2	4439	2071	524	857	177
	460	RR10018	933	435	133,3	62,2	6132	2861	687	1147	177
140	57	RR1502	1386	668	198,1	95,4	1129	544	183	240	203
	156	RR1506	1386	668	198,1	95,4	3090	1488	385	541	203
	333	RR15013	1386	668	198,1	95,4	6597	3177	582	915	203
	815	RR15032	1386	668	198,1	95,4	16.145	7775	1116	1931	203
200	152	RR2006	1995	1017	285,0	145,3	4332	2209	430	582	247
	330	RR20013	1995	1017	285,0	145,3	9405	4795	608	938	247
	457	RR20018	1995	1017	285,0	145,3	13.025	6640	765	1222	247
	610	RR20024	1995	1017	285,0	145,3	17.385	8863	917	1527	247
	914	RR20036	1995	1017	285,0	145,3	26.049	13.280	1222	2136	247
	1219	RR20048	1995	1017	285,0	145,3	34.741	17.712	1527	2746	247
325	153	RR3006	3201	1703	457,3	243,2	6997	3721	485	638	311
	305	RR30012	3201	1703	457,3	243,2	13.947	7418	638	943	311
	457	RR30018	3201	1703	457,3	243,2	20.889	11.114	790	1247	311
	609	RR30024	3201	1703	457,3	243,2	27.850	14.811	943	1552	311
	915	RR30036	3201	1703	457,3	243,2	41.843	22.253	1247	2162	311
	1219	RR30048	3201	1703	457,3	243,2	55.745	29.646	1552	2771	311
440	152	RR4006	4292	2297	613,1	328,1	9319	4987	538	690	358
	305	RR40012	4292	2297	613,1	328,1	18.700	10.007	690	995	358
	457	RR40018	4292	2297	613,1	328,1	28.018	14.995	843	1300	358
	610	RR40024	4292	2297	613,1	328,1	37.400	20.014	995	1605	358
	914	RR40036	4292	2297	613,1	328,1	56.037	29.988	1300	2214	358
	1219	RR40048	4292	2297	613,1	328,1	74.737	39.996	1605	2824	358
520	153	RR5006	5108	2838	729,7	405,4	11.164	6203	577	730	397
	305	RR50012	5108	2838	729,7	405,4	22.256	12.365	730	1035	397
	457	RR50018	5108	2838	729,7	405,4	33.347	18.526	882	1339	397
	609	RR50024	5108	2838	729,7	405,4	44.440	24.689	1035	1644	397
	915	RR50036	5108	2838	729,7	405,4	66.768	36.973	1339	2254	397
	1219	RR50048	5108	2838	729,7	405,4	88.951	49.418	1644	2863	397

* For RR1010 and RR1012: N = 32 mm; for RR308 and RR3014: N = 55 mm.

Double-Acting Long Stroke Cylinders

Capacity:
10 - 520 ton

Stroke:
57 - 1219 mm

Maximum Operating Pressure:
700 bar

RR Series



Cyl. Bore Dia. E (mm)	Plgr. Dia. F (mm)	Base to Adv. Port H (mm)	Top to Ret. Port I (mm)	Saddle Dia. J (mm)	Saddle Protr. fr. Plgr. K (mm)	Plunger Internal Thread O	Plunger Thread Length P (mm)	Base Mounting Holes			Collar Thread W	Collar Thread Length X (mm)	(kg)	Model Number
								Bolt Circle U (mm)	Thread V	Thread Depth Z (mm)				
42,9	34,9	36	57	35	6	1"- 8	25	–	–	–	2¼"- 14	26	12	**RR1010***
42,9	34,9	36	57	35	6	1"- 8	25	–	–	–	2¼"- 14	26	14	**RR1012***
73,2	54,1	39	81	50	10	1½"- 16	25	–	–	–	3 5/16"- 12	49	18	**RR308***
73,2	54,1	39	81	50	10	1½"- 16	25	–	–	–	3 5/16"- 12	49	29	**RR3014***
95,2	79,5	28	76	71	2	1"- 12	25	–	–	–	5"- 12	44	30	**RR506**
95,2	79,5	28	76	71	2	1"- 12	25	–	–	–	5"- 12	44	52	**RR5013**
95,2	79,5	57	76	71	2	1"- 12	25	76	½"- 13	25	5"- 12	44	68	**RR5020**
114,3	95,2	30	76	71	6	1"- 12	28	–	–	–	5¾"- 12	50	41	**RR756**
114,3	95,2	30	81	71	6	1"- 12	28	–	–	–	5¾"- 12	50	68	**RR7513**
130,3	95,2	38	71	76	3	1¾"- 12	35	139	¾"- 10	25	6 7/8"- 12	50	61	**RR1006**
130,3	95,2	38	71	76	3	1¾"- 12	35	139	¾"- 10	25	6 7/8"- 12	50	93	**RR10013**
130,3	95,2	41	92	76	3	1¾"- 12	35	139	¾"- 10	25	6 7/8"- 12	50	117	**RR10018**
158,8	114,3	22	66	95	19	–	–	–	–	–	–	–	49	**RR1502**
158,8	114,3	49	84	114	19	3 3/8"- 16	35	158	¾"- 16	28	8"- 12	55	93	**RR1506**
158,8	114,3	49	84	114	19	3 3/8"- 16	35	158	¾"- 16	28	8"- 12	55	124	**RR15013**
158,8	114,3	76	88	114	19	3 3/8"- 16	35	–	–	–	8"- 12	55	238	**RR15032**
190,5	133,4	57	96	133	22	–	–	127	1"- 8	25	–	–	147	**RR2006**
190,5	133,4	57	96	133	22	2½"- 12	63	127	1"- 8	25	9¾"- 12	54	199	**RR20013**
190,5	133,4	85	101	133	22	2½"- 12	63	127	1"- 8	25	9¾"- 12	54	204	**RR20018**
190,5	133,4	85	101	133	22	2½"- 12	63	127	1"- 8	25	9¾"- 12	54	279	**RR20024**
190,5	133,4	85	101	133	22	2½"- 12	63	127	1"- 8	25	9¾"- 12	54	383	**RR20036**
190,5	133,4	85	101	133	22	2½"- 12	63	127	1"- 8	25	9¾"- 12	54	483	**RR20048**
241,3	165,1	88	114	165	28	2½"- 12	82	158	1¼"- 7	44	12¼"- 12	58	200	**RR3006**
241,3	165,1	88	114	165	28	2½"- 12	82	158	1¼"- 7	44	12¼"- 12	58	312	**RR30012**
241,3	165,1	88	114	165	28	2½"- 12	82	158	1¼"- 7	44	12¼"- 12	58	385	**RR30018**
241,3	165,1	88	114	165	28	2½"- 12	82	158	1¼"- 7	44	12¼"- 12	58	469	**RR30024**
241,3	165,1	88	114	165	28	2½"- 12	82	158	1¼"- 7	44	12¼"- 12	58	628	**RR30036**
241,3	165,1	88	114	165	28	2½"- 12	82	158	1¼"- 7	44	12¼"- 12	58	780	**RR30048**
279,4	190,5	108	133	190	28	3"- 12	95	203	1½"- 6	50	14 1/8"- 8	65	303	**RR4006**
279,4	190,5	108	133	190	28	3"- 12	95	203	1½"- 6	50	14 1/8"- 8	65	399	**RR40012**
279,4	190,5	108	133	190	28	3"- 12	95	203	1½"- 6	50	14 1/8"- 8	65	453	**RR40018**
279,4	190,5	108	133	190	28	3"- 12	95	203	1½"- 6	50	14 1/8"- 8	65	597	**RR40024**
279,4	190,5	108	133	190	28	3"- 12	95	203	1½"- 6	50	14 1/8"- 8	65	792	**RR40036**
279,4	190,5	108	133	190	28	3"- 12	95	203	1½"- 6	50	14 1/8"- 8	65	980	**RR40048**
304,8	203,2	120	152	203	28	3¼"- 12	108	203	1¾"- 5	57	15 5/8"- 8	79	432	**RR5006**
304,8	203,2	120	152	203	28	3¼"- 12	108	203	1¾"- 5	57	15 5/8"- 8	79	589	**RR50012**
304,8	203,2	120	152	203	28	3¼"- 12	108	203	1¾"- 5	57	15 5/8"- 8	79	680	**RR50018**
304,8	203,2	120	152	203	28	3¼"- 12	108	203	1¾"- 5	57	15 5/8"- 8	79	816	**RR50024**
304,8	203,2	120	152	203	28	3¼"- 12	108	203	1¾"- 5	57	15 5/8"- 8	79	1002	**RR50036**
304,8	203,2	120	152	203	28	3¼"- 12	108	203	1¾"- 5	57	15 5/8"- 8	79	1224	**RR50048**

Enerpac High Tonnage Cylinders

ENERPAC

▼ HCL2006, HCG2002, HCR2006



Highest Level of Durability

The Summit Edition

Innovation is at the heart of the new Summit Edition cylinders, delivering the high quality construction you expect from Enerpac. The design and durability add safety and reliability to your job.

- Plunger support bearing adds support for eccentric loads [2]
- Nitrocarburization surface treatment for improved wear resistance and corrosion protection
- Low wear, high pressure seals provide longer service life.

[2] Eccentric load (or "side-load") is inevitable in heavy lifting. Our unique Summit Edition features provide the ultimate protection against side-load. Increased bearing surface maintains stability and nitrocarburization treatment prevents scoring on the inside of the cylinder. Side-load poses a real problem.... our new cylinder features are the solution!

Reaching the Summit Edition:

- **Nitrocarburized hardened surfaces offers improved protection against side-load scoring and cyclic wear**
- **Weather protected, inside and out**
- **Low-friction locking rings spin easy, save time and effort [1]**
- **State of the art bearing materials reduce wear and avoid bore damage even in high side-load conditions**

Low wear, high pressure seals

- **Improved seal design and material selection increases seal performance even in harsh conditions**
- **Low friction for faster retraction, longer life**

Versatile

- **Over 220 models in 5 configurations [1]**
- **Certified lifting eyes, base mounting holes and collar threads are included for secure handling and cylinder mounting [1]**

▼ *Bridge lifting and launching system. The load is balanced on groups of lock nut cylinders. The hydraulic movements are synchronised using the Enerpac PLC-controlled synchronous lift system.*



[1] See specific models technical data for more information.

Enerpac High Tonnage Cylinders

High Tonnage Cylinders
The Enerpac High Tonnage Cylinders are particularly suitable for (multipoint) lifting applications.

HCG, HCR, HCL-Series Cylinders
- 50 - 1000 ton lifting capacity
- 50 - 300 mm stroke

HCG-Series - single-acting
- gravity return
- stop ring to prevent plunger blow-out
- designed to withstand up to 10% side-load of maximum capacity.

HCR-Series - double-acting
- hydraulic advance and retract for controlled movement
- designed to withstand up to 10% side-load of maximum capacity.

HCL-Series - lock nut, single-acting
- gravity return
- lock nut for mechanical load holding
- overflow port to prevent plunger blow out
- designed to withstand 10% side-load up to 90% of maximum stroke.

HCRL-Series - lock nut, double-acting
- hydraulic advance and retract
- designed to withstand up to 10% side-load of maximum capacity
- integrated tilt saddle
- lock nut for mechanical load holding
- 50 - 300 ton lifting capacity
- 150 - 300 mm stroke

LPL-Series - lock nut, low height, single-acting (see page 24)
- 60 - 500 ton lifting capacity;
- 45 - 50 mm lifting stroke
- integrated tilt saddle
- gravity return
- lock nut for mechanical load holding
- 5-10% side-load of maximum capacity.

In combination with our state of the art power packs, you will have a world class hydraulic system to perform the most challenging lifting jobs in a safe and professional manner. See **page 75** for more information on our pump offering.

Page: 46

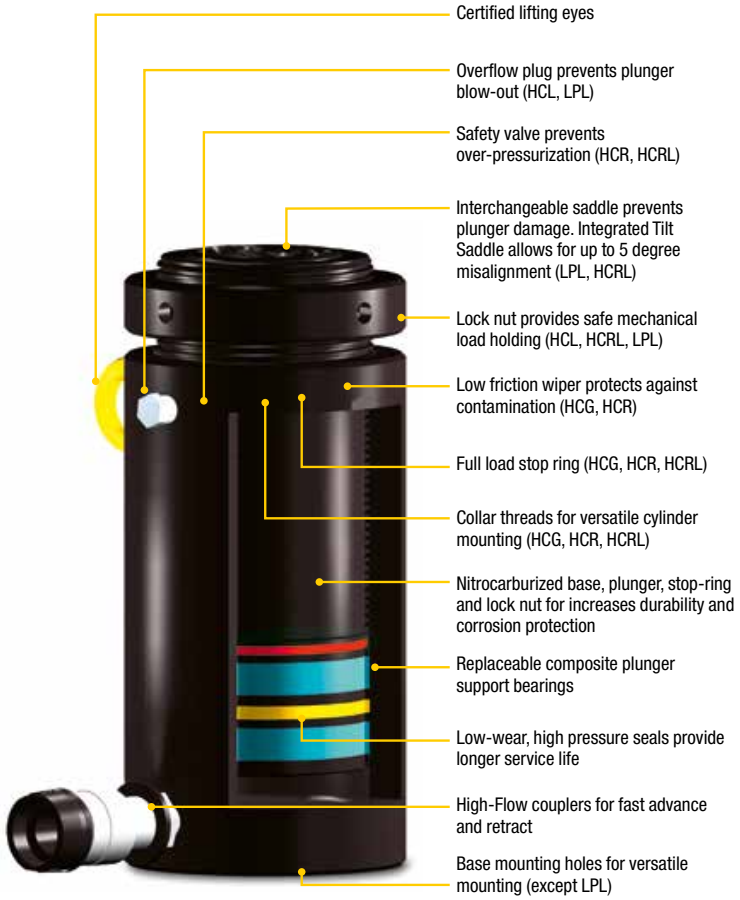

HCG HCR HCL HCRL Series



Capacity:
50 - 1000 ton

Stroke:
50 - 300 mm

Maximum Operating Pressure:
700 bar



Assisted Return Pumps
Enerpac HCG, HCL and LPL-Series cylinders are hydraulic advance and gravity return. To improve productivity and plunger retraction Enerpac offers assisted return on ZU4 and ZE-Series pumps featuring Enerpac **Venturi Valve technology**, specifically to facilitate the faster return of single-acting, spring and gravity return cylinders. See enerpac.com for details.

Page: 100



Split-Flow Pumps
SFP-Series pumps with multiple outlets with equal oil flow. For lifting and lowering applications on multiple points these pumps are a far better alternative than using separately operated pumps.

Page: 336



Synchronous Lifting Systems
EVO-Series pumps the multi-functional lifting system and multiple lift point capabilities.

Page: 340

Tel: +45 63 12 83 00 | Email: ps@hymatik.com | www.hymatik.com | Hvidkaervej 27a, DK-5250 Odense SV, Denmark

Enerpac High Tonnage Cylinders

ENERPAC



QUICK SELECTION			HCG-Series		HCR-Series		HCL-Series		HCRL-Series *	
Cylinder Capacity ton	Stroke (mm)	Maximum Cylinder Capacity at 700 bar ton (kN)	Model Number Single-Acting Page: 48	Collapsed Height (mm)	Model Number Double-Acting Page: 52	Collapsed Height (mm)	Model Number Single-Acting With Lock Nut Page: 56	Collapsed Height (mm)	Model Number Double-Acting With Lock Nut Page: 60	Collapsed Height (mm)
50	50	56 (550)	HCG502	183	HCR502	183	HCL502	164	–	–
	100		HCG504	233	HCR504	233	HCL504	214	–	–
	150		HCG506	283	HCR506	283	HCL506	264	HCRL506	310
	200		HCG508	346	HCR508	346	HCL508	314	HCRL508	377
	250		HCG5010	396	HCR5010	396	HCL5010	364	HCRL5010	427
	300		HCG5012	446	HCR5012	446	HCL5012	414	HCRL5012	477
100	50	102 (1002)	HCG1002	202	HCR1002	202	HCL1002	187	–	–
	100		HCG1004	252	HCR1004	252	HCL1004	237	–	–
	150		HCG1006	302	HCR1006	302	HCL1006	287	HCRL1006	346
	200		HCG1008	379	HCR1008	379	HCL1008	337	HCRL1008	421
	250		HCG10010	429	HCR10010	429	HCL10010	387	HCRL10010	471
	300		HCG10012	479	HCR10012	479	HCL10012	437	HCRL10012	521
150	50	153 (1497)	HCG1502	220	HCR1502	220	HCL1502	209	–	–
	100		HCG1504	270	HCR1504	270	HCL1504	259	–	–
	150		HCG1506	320	HCR1506	320	HCL1506	309	HCRL1506	359
	200		HCG1508	397	HCR1508	397	HCL1508	359	HCRL1508	434
	250		HCG15010	447	HCR15010	447	HCL15010	409	HCRL15010	484
	300		HCG15012	497	HCR15012	497	HCL15012	459	HCRL15012	534
200	50	202 (1985)	HCG2002	231	HCR2002	231	HCL2002	238	–	–
	100		HCG2004	281	HCR2004	281	HCL2004	288	–	–
	150		HCG2006	331	HCR2006	331	HCL2006	338	HCRL2006	399
	200		HCG2008	408	HCR2008	408	HCL2008	388	HCRL2008	469
	250		HCG20010	458	HCR20010	458	HCL20010	438	HCRL20010	519
	300		HCG20012	508	HCR20012	508	HCL20012	488	HCRL20012	569
250	50	259 (2541)	HCG2502	241	HCR2502	241	HCL2502	249	–	–
	100		HCG2504	291	HCR2504	291	HCL2504	299	–	–
	150		HCG2506	341	HCR2506	341	HCL2506	349	HCRL2506	416
	200		HCG2508	431	HCR2508	431	HCL2508	399	HCRL2508	491
	250		HCG25010	481	HCR25010	481	HCL25010	449	HCRL25010	541
	300		HCG25012	531	HCR25012	531	HCL25012	499	HCRL25012	591
300	50	310 (3036)	HCG3002	296	HCR3002	296	HCL3002	278	–	–
	100		HCG3004	346	HCR3004	346	HCL3004	328	–	–
	150		HCG3006	396	HCR3006	396	HCL3006	378	HCRL3006	421
	200		HCG3008	446	HCR3008	446	HCL3008	428	HCRL3008	496
	250		HCG30010	496	HCR30010	496	HCL30010	478	HCRL30010	546
	300		HCG30012	546	HCR30012	546	HCL30012	528	HCRL30012	596

* See page 60 for HCRL-cylinder maximum capacity.

Enerpac High Tonnage Cylinders

Capacity:
50 - 1000 ton

Stroke:
50 - 300 mm

Maximum Operating Pressure:
700 bar

HCG
HCR
HCL
HCRL
Series





QUICK SELECTION			HCG-Series		HCR-Series		HCL-Series	
Cylinder Capacity ton	Stroke (mm)	Maximum Cylinder Capacity at 700 bar ton (kN)	Model Number Single-Acting Page: 50	Collapsed Height (mm)	Model Number Double-Acting Page: 54	Collapsed Height (mm)	Model Number Single-Acting With Lock Nut Page: 58	Collapsed Height (mm)
400	50	409 (4008)	HCG4002	321	HCR4002	321	HCL4002	317
	100		HCG4004	371	HCR4004	371	HCL4004	367
	150		HCG4006	421	HCR4006	421	HCL4006	417
	200		HCG4008	471	HCR4008	471	HCL4008	467
	250		HCG40010	521	HCR40010	521	HCL40010	517
	300		HCG40012	571	HCR40012	571	HCL40012	567
500	50	522 (5114)	HCG5002	344	HCR5002	344	HCL5002	357
	100		HCG5004	394	HCR5004	394	HCL5004	407
	150		HCG5006	444	HCR5006	444	HCL5006	457
	200		HCG5008	494	HCR5008	494	HCL5008	507
	250		HCG50010	544	HCR50010	544	HCL50010	557
	300		HCG50012	594	HCR50012	594	HCL50012	607
600	50	611 (5987)	HCG6002	352	HCR6002	352	HCL6002	380
	100		HCG6004	402	HCR6004	402	HCL6004	430
	150		HCG6006	452	HCR6006	452	HCL6006	480
	200		HCG6008	502	HCR6008	502	HCL6008	530
	250		HCG60010	552	HCR60010	552	HCL60010	580
	300		HCG60012	602	HCR60012	602	HCL60012	630
800	50	831 (8149)	HCG8002	404	HCR8002	404	HCL8002	430
	100		HCG8004	454	HCR8004	454	HCL8004	480
	150		HCG8006	504	HCR8006	504	HCL8006	530
	200		HCG8008	554	HCR8008	554	HCL8008	580
	250		HCG80010	604	HCR80010	604	HCL80010	630
	300		HCG80012	654	HCR80012	654	HCL80012	680
1000	50	1085 (10.644)	HCG10002	442	HCR10002	442	HCL10002	484
	100		HCG10004	492	HCR10004	492	HCL10004	534
	150		HCG10006	542	HCR10006	542	HCL10006	584
	200		HCG10008	592	HCR10008	592	HCL10008	634
	250		HCG100010	642	HCR100010	642	HCL100010	684
	300		HCG100012	692	HCR100012	692	HCL100012	734

HCG-Series, High Tonnage Cylinders

ENERPAC

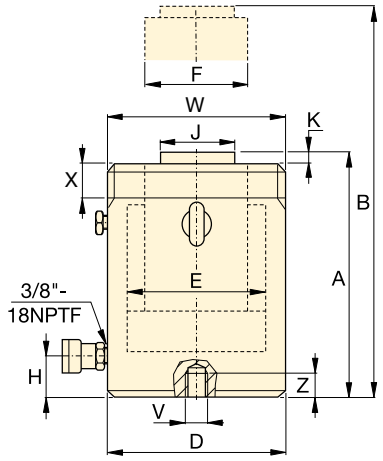

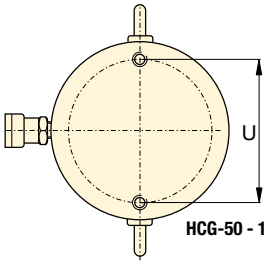

HCG-50 - 150 ton

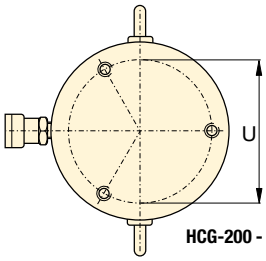

HCG-200 - 300 ton

HCG-Series, Single-Acting, Gravity Return Cylinders

- **Hardened surface resists side-loading and cyclic wear**
- **Designed to withstand 10% side-load of maximum capacity [1)]**
- **Stop ring to prevent plunger blow-out**
- **Weather protected, inside and out**
- **Upper and lower replaceable bearings enclose the cylinder plunger for support throughout the stroke**
- **Certified lifting eyes, base mounting holes and collar threads.**
- **Standard collar thread up to 250 ton models. Collar thread is optional on 300 ton models and higher.**

SELECTION CHART 50 - 300 TON HCG-MODELS

For 400 - 1000 ton models, see pages 50-51.
For full product features see pages 44-45.

Cylinder Capacity ton	Stroke (mm)	Model Number	Maximum Cylinder Capacity at 700 bar ton (kN)	Cylinder Efective Area (cm^2)	Oil Capacity (cm^3)	Collapsed Height A (mm)
50	50	**HCG502**	56 (550)	78,5	393	183
	100	**HCG504**			785	233
	150	**HCG506** [1)]			1178	283
	200	**HCG508**			1571	346
	250	**HCG5010**			1963	396
	300	**HCG5012** [1)]			2356	446
100	50	**HCG1002**	102 (1002)	143,1	716	202
	100	**HCG1004**			1431	252
	150	**HCG1006**			2147	302
	200	**HCG1008**			2863	379
	250	**HCG10010**			3578	429
	300	**HCG10012**			4294	479
150	50	**HCG1502**	153 (1497)	213,8	1069	220
	100	**HCG1504**			2138	270
	150	**HCG1506**			3207	320
	200	**HCG1508**			4276	397
	250	**HCG15010**			5346	447
	300	**HCG15012**			6415	497
200	50	**HCG2002**	202 (1985)	283,5	1418	231
	100	**HCG2004**			2835	281
	150	**HCG2006**			4253	331
	200	**HCG2008**			5671	408
	250	**HCG20010**			7088	458
	300	**HCG20012**			8506	508
250	50	**HCG2502**	259 (2541)	363,1	1815	241
	100	**HCG2504**			3631	291
	150	**HCG2506**			5446	341
	200	**HCG2508**			7261	431
	250	**HCG25010**			9076	481
	300	**HCG25012**			10.892	531
300	50	**HCG3002**	310 (3036)	433,7	2169	296
	100	**HCG3004**			4337	346
	150	**HCG3006**			6506	396
	200	**HCG3008**			8675	446
	250	**HCG30010**			10.843	496
	300	**HCG30012**			13.012	546

[1)] HCG506 and HCG5012: 7% side-load of maximum capacity.

Collar Thread * (mm)

Model / Capacity ton	Thread Size W	Thread Length X
HCG50	M130 x 2	30
HCG100	M175 x 3	46
HCG150	M215 x 3	55
HCG200	M250 x 3	63
HCG250	M280 x 3	64
HCG300 *	M305 x 3	73

* Standard collar thread up to 250 ton models. Collar thread is optional on 300 ton models and higher. For collar thread on cylinder add suffix "**E002**"to model number. **Example: HCG3006E002** The collar thread length is designed for the full rated cylinder capacity.

Base Mounting Holes (mm)

Model / Capacity ton	Bolt Circle U	Thread Size V	Minimum Thread Depth Z	Number of Holes	Angle from Coupler
HCG50	105	M12 x 1,75	22	2	90°
HCG100	150	M12 x 1,75	22	2	90°
HCG150	185	M12 x 1,75	22	2	90°
HCG200	215	M12 x 1,75	22	3	60°
HCG250	245	M12 x 1,75	22	3	60°
HCG300	260	M16 x 2	25	3	60°

Single-Acting, High Tonnage Cylinders

Capacity:
50 - 300 ton

Stroke:
50 - 300 mm

Maximum Operating Pressure:
700 bar

HCG Series



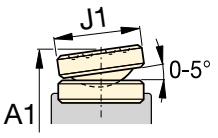

CATS-Series Tilt Saddle

Extended Height B (mm)	Outside Diameter D (mm)	Cylinder Bore Diameter E (mm)	Plunger Diameter F (mm)	Base to Advance Port H (mm)	Standard Saddle Diameter J (mm)	Saddle Protrusion from Plunger K (mm)	(kg)	Model Number	Optional Tilt Saddle		
									Saddle Diameter J1 (mm)	Collapsed Height [2] A1 (mm)	Saddle Model Number
233	130	100	70	38	50	3	17	HCG502	71	197	CATS50
333							20	HCG504		247	
433							24	HCG506 [1]		297	
546							29	HCG508		360	
646							32	HCG5010		410	
746							36	HCG5012 [1]		460	
252	175	135	95	38	75	3	33	HCG1002	71	212	CATS101
352							40	HCG1004		262	
452							46	HCG1006		312	
579							58	HCG1008		389	
679							65	HCG10010		439	
779							71	HCG10012		489	
270	215	165	120	41	94	3	56	HCG1502	97	239	CATS150
370							66	HCG1504		289	
470							76	HCG1506		339	
597							94	HCG1508		416	
697							104	HCG15010		466	
797							115	HCG15012		516	
281	250	190	140	47	113	3	81	HCG2002	126	249	CATS200
381							95	HCG2004		299	
481							109	HCG2006		349	
608							136	HCG2008		426	
708							150	HCG20010		476	
808							164	HCG20012		526	
291	280	215	170	53	140	4	107	HCG2502	175	280	CATS300
391							125	HCG2504		330	
491							144	HCG2506		380	
631							182	HCG2508		470	
731							201	HCG25010		520	
831							219	HCG25012		570	
346	305	235	200	58	140	4	158	HCG3002	175	335	CATS300
446							182	HCG3004		385	
546							206	HCG3006		435	
646							230	HCG3008		485	
746							254	HCG30010		535	
846							278	HCG30012		585	

[2] A1 = Collapsed height including CATS-Series tilt saddle.

Tel: +45 63 12 83 00 | Email: ps@hymatik.com | www.hymatik.com | Hvidkaervej 27a, DK-5250 Odense SV, Denmark

HCG-Series, High Tonnage Cylinders

ENERPAC

HCG-Series, Single-Acting, Gravity Return Cylinders

- **Hardened surface resists side-loading and cyclic wear**
- **Designed to withstand 10% side-load of maximum capacity**
- **Stop ring to prevent plunger blow-out**
- **Weather protected, inside and out**
- **Upper and lower replaceable bearings enclose the cylinder plunger for support throughout the stroke**
- **Certified lifting eyes, base mounting holes**
- **Optional collar threads on 300 ton models and higher capacities.**

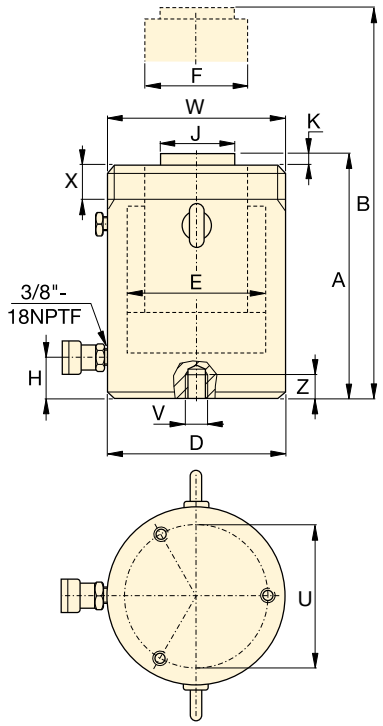

SELECTION CHART400 - 1000 TON HCG-MODELS
For 50 - 300 ton models, see pages 48-49.
For full product features see pages 44-45.

Cylinder Capacity ton	Stroke (mm)	Model Number	Maximum Cylinder Capacity at 700 bar ton (kN)	Cylinder Efective Area (cm^2)	Oil Capacity (cm^3)	Collapsed Height A (mm)
400	50	**HCG4002**	409 (4008)	572,6	2863	321
	100	**HCG4004**			5726	371
	150	**HCG4006**			8588	421
	200	**HCG4008**			11.451	471
	250	**HCG40010**			14.314	521
	300	**HCG40012**			17.177	571
500	50	**HCG5002**	522 (5114)	730,6	3653	344
	100	**HCG5004**			7306	394
	150	**HCG5006**			10.959	444
	200	**HCG5008**			14.612	494
	250	**HCG50010**			18.265	544
	300	**HCG50012**			21.918	594
600	50	**HCG6002**	611 (5987)	855,3	4276	352
	100	**HCG6004**			8553	402
	150	**HCG6006**			12.829	452
	200	**HCG6008**			17.106	502
	250	**HCG60010**			21.382	552
	300	**HCG60012**			25.659	602
800	50	**HCG8002**	831 (8149)	1164,2	5821	404
	100	**HCG8004**			11.642	454
	150	**HCG8006**			17.462	504
	200	**HCG8008**			23.283	554
	250	**HCG80010**			29.104	604
	300	**HCG80012**			34.925	654
1000	50	**HCG10002**	1085 (10.644)	1520,5	7603	442
	100	**HCG10004**			15.205	492
	150	**HCG10006**			22.808	542
	200	**HCG10008**			30.411	592
	250	**HCG100010**			38.013	642
	300	**HCG100012**			45.616	692

Optional Collar Thread (mm)		
Model / Capacity ton	Thread Size W	Thread Length X
HCG400	M350 x 3	83
HCG500	M400 x 4	90
HCG600	M430 x 4	100
HCG800	M505 x 5	122
HCG1000	M570 x 5	137

Collar thread is optional on 300 ton models and higher. For collar thread on cylinder add suffix "**E002**"to model number. Example: **HCG4006E002**

The collar thread length is designed for the full rated cylinder capacity.

Base Mounting Holes (mm)					
Model / Capacity ton	Bolt Circle U	Thread Size V	Minimum Thread Depth Z	Number of Holes	Angle from Coupler
HCG400	300	M16 x 2	25	3	60˚
HCG500	340	M24 x 3	36	3	60˚
HCG600	370	M24 x 3	36	3	60˚
HCG800	440	M24 x 3	36	3	60˚
HCG1000	500	M24 x 3	36	3	60˚

Single-Acting, High Tonnage Cylinders



▲ *Offshore wind turbines levelling: Enerpac's synchronous lifting system was the solution for levelling support cross pieces on 80 wind turbines.*

HCG Series



Capacity:
400 - 1000 ton

Stroke:
50 - 300 mm

Maximum Operating Pressure:
700 bar

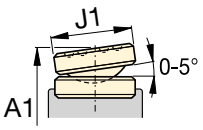

CATS-Series Tilt Saddle

Extended Height B (mm)	Outside Diameter D (mm)	Cylinder Bore Diameter E (mm)	Plunger Diameter F (mm)	Base to Advance Port H (mm)	Standard Saddle Diameter J (mm)	Saddle Protrusion from Plunger K (mm)	(kg)	Model Number	Optional Tilt Saddle: Saddle Diameter J1 (mm)	Optional Tilt Saddle: Collapsed Height * A1 (mm)	Optional Tilt Saddle: Saddle Model Number
371	350	270	220	74	159	4	227	**HCG4002**	210	369	**CATS400**
471							257	**HCG4004**		419	
571							287	**HCG4006**		469	
671							317	**HCG4008**		519	
771							347	**HCG40010**		569	
871							378	**HCG40012**		619	
394	400	305	250	79	179	4	319	**HCG5002**	230	392	**CATS500**
494							359	**HCG5004**		442	
594							399	**HCG5006**		492	
694							439	**HCG5008**		542	
794							479	**HCG50010**		592	
894							519	**HCG50012**		642	
402	430	330	270	85	194	4	378	**HCG6002**	250	405	**CATS600**
502							424	**HCG6004**		455	
602							470	**HCG6006**		505	
702							516	**HCG6008**		555	
802							562	**HCG60010**		605	
902							608	**HCG60012**		655	
454	505	385	320	100	224	4	606	**HCG8002**	275	461	**CATS800**
554							671	**HCG8004**		511	
654							735	**HCG8006**		561	
754							800	**HCG8008**		611	
854							864	**HCG80010**		661	
954							929	**HCG80012**		711	
492	570	440	340	114	249	4	840	**HCG10002**	300	519	**CATS1000**
592							916	**HCG10004**		569	
692							992	**HCG10006**		619	
792							1068	**HCG10008**		669	
892							1145	**HCG100010**		719	
992							1221	**HCG100012**		769	

* A1 = Collapsed height including CATS-Series tilt saddle.

HCR-Series, High Tonnage Cylinders

ENERPAC

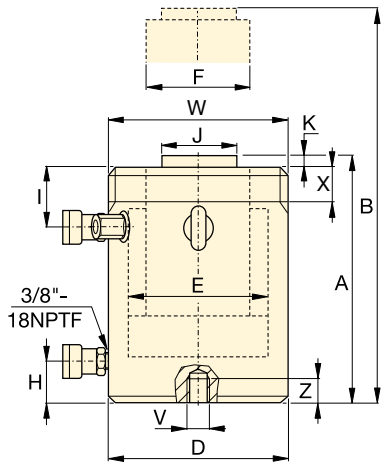

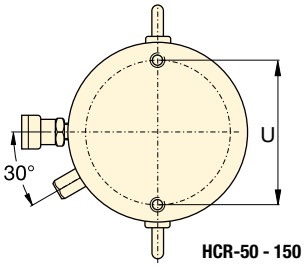

HCR-50 - 150 ton

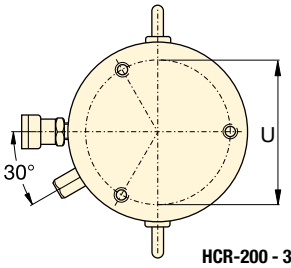

HCR-200 - 300 ton

HCR-Series, Double-Acting Cylinders

- **Fast advance and retract**
- **Designed to withstand 10% side-load of maximum capacity [1)]**
- **Hardened surface resists side-loading and cyclic wear**
- **Weather protected, inside and out**
- **Upper and lower replaceable bearings enclose the cylinder plunger for support throughout the stroke**
- **Certified lifting eyes, base mounting holes and collar threads**
- **Standard collar thread up to 250 ton models. Collar thread is optional on 300 ton models and higher.**

SELECTION CHART & DETAILS OF 50 - 300 TON HCR-MODELS

For 400 - 1000 ton models, see pages 54-55.
For full product features see pages 44-45.

Cylinder Capacity ton	Stroke (mm)	Model Number	Maximum Cylinder Capacity at 700 bar ton (kN)	Cylinder Efective Area (cm^2)	Oil Capacity (cm^3) Advance	Oil Capacity (cm^3) Retract	Collapsed Height A (mm)
50	50	HCR502	56 (550)	78,5	393	200	183
	100	HCR504			785	401	233
	150	HCR506 [1)]			1178	601	283
	200	HCR508			1571	801	346
	250	HCR5010			1963	1001	396
	300	HCR5012 [1)]			2356	1202	446
100	50	HCR1002	102 (1002)	143,1	716	361	202
	100	HCR1004			1431	723	252
	150	HCR1006			2147	1084	302
	200	HCR1008			2863	1445	379
	250	HCR10010			3578	1806	429
	300	HCR10012			4294	2168	479
150	50	HCR1502	153 (1497)	213,8	1069	504	220
	100	HCR1504			2138	1007	270
	150	HCR1506			3207	1511	320
	200	HCR1508			4276	2015	397
	250	HCR15010			5346	2518	447
	300	HCR15012			6415	3022	497
200	50	HCR2002	202 (1985)	283,5	1418	648	231
	100	HCR2004			2835	1296	281
	150	HCR2006			4253	1944	331
	200	HCR2008			5671	2592	408
	250	HCR20010			7088	3240	458
	300	HCR20012			8506	3888	508
250	50	HCR2502	259 (2541)	363,1	1815	680	241
	100	HCR2504			3631	1361	291
	150	HCR2506			5446	2041	341
	200	HCR2508			7261	2721	431
	250	HCR25010			9076	3402	481
	300	HCR25012			10.892	4082	531
300	50	HCR3002	310 (3036)	433,7	2169	598	296
	100	HCR3004			4337	1196	346
	150	HCR3006			6506	1794	396
	200	HCR3008			8675	2392	446
	250	HCR30010			10.843	2989	496
	300	HCR30012			13.012	3587	546

[1)] HCR506 and HCR5012: 7% side-load of maximum capacity.

Collar Thread * (mm)

Model / Capacity ton	Thread Size W	Thread Length X
HCR50	M130 x 2	30
HCR100	M175 x 3	46
HCR150	M215 x 3	55
HCR200	M250 x 3	63
HCR250	M280 x 3	64
HCR300 *	M305 x 3	73

* Standard collar thread up to 250 ton models. Collar thread is optional on 300 ton models and higher. For collar thread on cylinder add suffix "**E002**"to model number. **Example: HCR3006E002** The collar thread length is designed for the full rated cylinder capacity.

Base Mounting Holes (mm)

Model / Capacity ton	Bolt Circle U	Thread Size V	Minimum Thread Depth Z	Number of Holes	Angle from Coupler
HCR50	105	M12 x 1,75	22	2	90°
HCR100	150	M12 x 1,75	22	2	90°
HCR150	185	M12 x 1,75	22	2	90°
HCR200	215	M12 x 1,75	22	3	60°
HCR250	245	M12 x 1,75	22	3	60°
HCR300	260	M16 x 2	25	3	60°

Double-Acting, High Tonnage Cylinders

Capacity:
50 - 300 ton

Stroke:
50 - 300 mm

Maximum Operating Pressure:
700 bar

HCR Series



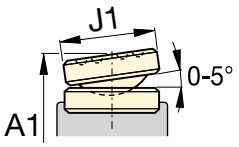

CATS-Series Tilt Saddle

Extended Height B (mm)	Outside Diameter D (mm)	Cylinder Bore Diameter E (mm)	Plunger Diameter F (mm)	Base to Advance Port H (mm)	Top to Retract Port I (mm)	Standard Saddle Diameter J (mm)	Saddle Protrusion from Plunger K (mm)	(kg)	Model Number	Optional Tilt Saddle		
										Saddle Diameter J1 (mm)	Collapsed Height [2] A1 (mm)	Saddle Model Number
233	130	100	70	38	45	50	3	17	HCR502	71	197	CATS50
333								21	HCR504		247	
433								25	HCR506 [1]		297	
546					55			31	HCR508		360	
646								34	HCR5010		410	
746								38	HCR5012 [1]		460	
252	175	135	95	38	65	75	3	34	HCR1002	71	212	CATS101
352								41	HCR1004		262	
452								48	HCR1006		312	
579					80			59	HCR1008		389	
679								66	HCR10010		439	
779								73	HCR10012		489	
270	215	165	120	41	70	94	3	56	HCR1502	97	239	CATS150
370								67	HCR1504		289	
470								78	HCR1506		339	
597					90			95	HCR1508		416	
697								106	HCR15010		466	
797								116	HCR15012		516	
281	250	190	140	47	79	113	3	81	HCR2002	126	249	CATS200
381								96	HCR2004		299	
481								111	HCR2006		349	
608					97			139	HCR2008		426	
708								153	HCR20010		476	
808								168	HCR20012		526	
291	280	215	170	53	79	140	4	107	HCR2502	175	280	CATS300
391								127	HCR2504		330	
491								146	HCR2506		380	
631					104			184	HCR2508		470	
731								207	HCR25010		520	
831								227	HCR25012		570	
346	305	235	200	58	101	140	4	159	HCR3002	175	335	CATS300
446								183	HCR3004		385	
546								208	HCR3006		435	
646								232	HCR3008		485	
746								257	HCR30010		535	
846								281	HCR30012		585	

[2] A1 = Collapsed height including CATS-Series tilt saddle.

HCR-Series, High Tonnage Cylinders

ENERPAC

HCR-Series, Double-Acting Cylinders

- **Fast advance and retract**
- **Designed to withstand 10% side-load of maximum capacity**
- **Hardened surface resists side-loading and cyclic wear**
- **Weather protected, inside and out**
- **Upper and lower replaceable bearings enclose the cylinder plunger for support throughout the stroke**
- **Certified lifting eyes, base mounting holes and optional collar threads**
- **Optional collar threads on 300 ton models and higher capacities.**

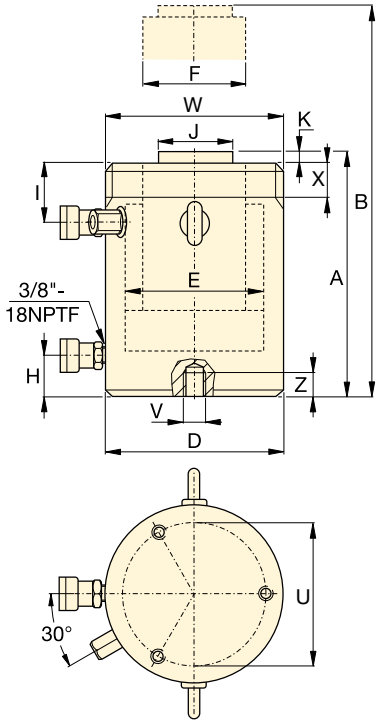

SELECTION CHART & DETAILS OF 400 - 1000 TON HCR-MODELS
For 50 - 300 ton models, see pages 52-53.
For full product features see pages 44-45.

Cylinder Capacity ton	Stroke (mm)	Model Number	Maximum Cylinder Capacity at 700 bar ton (kN)	Cylinder Efective Area (cm^2)	Oil Capacity (cm^3) Advance	Oil Capacity (cm^3) Retract	Collapsed Height A (mm)
400	50	HCR4002	409 (4008)	572,6	2863	962	321
	100	HCR4004			5726	1924	371
	150	HCR4006			8588	2886	421
	200	HCR4008			11.451	3848	471
	250	HCR40010			14.314	4811	521
	300	HCR40012			17.177	5773	571
500	50	HCR5002	522 (5114)	730,6	3653	1199	344
	100	HCR5004			7306	2397	394
	150	HCR5006			10.959	3596	444
	200	HCR5008			14.612	4795	494
	250	HCR50010			18.265	5994	544
	300	HCR50012			21.918	7192	594
600	50	HCR6002	611 (5987)	855,3	4276	1414	352
	100	HCR6004			8553	2827	402
	150	HCR6006			12.829	4241	452
	200	HCR6008			17.106	5655	502
	250	HCR60010			21.382	7069	552
	300	HCR60012			25.659	8482	602
800	50	HCR8002	831 (8149)	1164,2	5821	1800	404
	100	HCR8004			11.642	3599	454
	150	HCR8006			17.462	5399	504
	200	HCR8008			23.283	7198	554
	250	HCR80010			29.104	8998	604
	300	HCR80012			34.925	10.797	654
1000	50	HCR10002	1085 (10.644)	1520,5	7603	3063	442
	100	HCR10004			15.205	6126	492
	150	HCR10006			22.808	9189	542
	200	HCR10008			30.411	12.252	592
	250	HCR100010			38.013	15.315	642
	300	HCR100012			45.616	18.378	692

Optional Collar Thread (mm)

Model / Capacity ton	Thread Size W	Thread Length X
HCR400	M350 x 3	83
HCR500	M400 x 4	90
HCR600	M430 x 4	100
HCR800	M505 x 5	122
HCR1000	M570 x 5	137

Collar thread is optional on 300 ton models and higher. For collar thread on cylinder add suffix "**E002**"to model number. Example: **HCR4006E002**

The collar thread length is designed for the full rated cylinder capacity.

Base Mounting Holes (mm)

Model / Capacity ton	Bolt Circle U	Thread Size V	Minimum Thread Depth Z	Number of Holes	Angle from Coupler
HCR400	300	M16 x 2	25	3	60˚
HCR500	340	M24 x 3	36	3	60˚
HCR600	370	M24 x 3	36	3	60˚
HCR800	440	M24 x 3	36	3	60˚
HCR1000	500	M24 x 3	36	3	60˚

Tel: +45 63 12 83 00 | Email: ps@hymatik.com | www.hymatik.com | Hvidkaervej 27a, DK-5250 Odense SV, Denmark

Double-Acting, High Tonnage Cylinders



▲ *The superlifting and launch of a 43.000-ton floating oil production system in Malaysia for the Gumusut-Kakap offshore field has set high benchmarks for safety through its use of sophisticated EVO-Series synchronous hydraulics to lift, balance, weigh and smoothly launch massive resource structures.*

HCR Series



Capacity:
400 - 1000 ton

Stroke:
50 - 300 mm

Maximum Operating Pressure:
700 bar

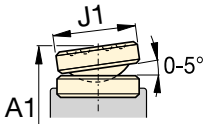

CATS-Series Tilt Saddle

Extended Height B (mm)	Outside Diameter D (mm)	Cylinder Bore Diameter E (mm)	Plunger Diameter F (mm)	Base to Advance Port H (mm)	Top to Retract Port I (mm)	Standard Saddle Diameter J (mm)	Saddle Protrusion from Plunger K (mm)	(kg)	Model Number	Optional Tilt Saddle: Saddle Diameter J1 (mm)	Optional Tilt Saddle: Collapsed Height * A1 (mm)	Optional Tilt Saddle: Saddle Model Number
371	350	270	220	74	111	159	4	227	**HCR4002**	210	369	**CATS400**
471								258	**HCR4004**		419	
571								289	**HCR4006**		469	
671								321	**HCR4008**		519	
771								352	**HCR40010**		569	
871								383	**HCR40012**		619	
394	400	305	250	79	121	179	4	320	**HCR5002**	230	392	**CATS500**
494								361	**HCR5004**		442	
594								402	**HCR5006**		492	
694								443	**HCR5008**		542	
794								484	**HCR50010**		592	
894								525	**HCR50012**		642	
402	430	330	270	85	121	194	4	379	**HCR6002**	250	405	**CATS600**
502								427	**HCR6004**		455	
602								474	**HCR6006**		505	
702								521	**HCR6008**		555	
802								568	**HCR60010**		605	
902								615	**HCR60012**		655	
454	505	385	320	100	143	224	4	608	**HCR8002**	275	461	**CATS800**
554								674	**HCR8004**		511	
654								740	**HCR8006**		561	
754								806	**HCR8008**		611	
854								872	**HCR80010**		661	
954								938	**HCR80012**		711	
492	570	440	340	114	153	249	4	843	**HCR10002**	300	519	**CATS1000**
592								921	**HCR10004**		569	
692								1000	**HCR10006**		619	
792								1079	**HCR10008**		669	
892								1158	**HCR100010**		719	
992								1236	**HCR100012**		769	

* A1 = Collapsed height including CATS-Series tilt saddle.

HCL-Series, High Tonnage Lock Nut Cylinders

ENERPAC

HCL-Series, Single-Acting, Gravity Return Cylinders

- **Lock nut provides positive and safe mechanical load holding**
- **Low-friction locking rings spin easy, save time and effort**
- **Designed to withstand 10% side-load up to 90% of maximum stroke**
- **Hardened surface resists side-loading and cyclic wear**
- **Overflow port as stroke limiter to prevent plunger blow-out**
- **Weather protected, inside and out**
- **Replaceable bearings enclose the plunger for support throughout the stroke**
- **Certified lifting eyes and base mounting holes.**

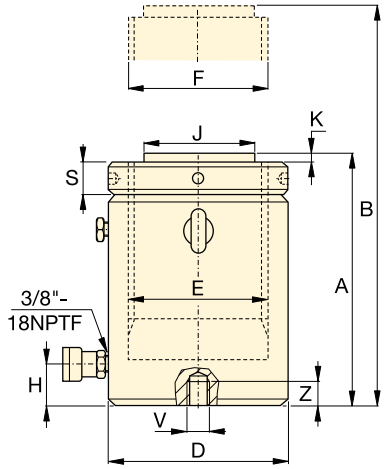

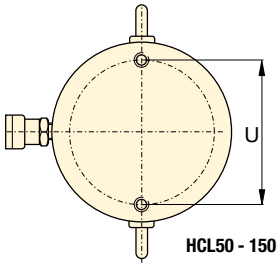

HCL50 - 150 ton

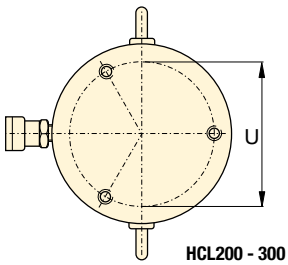

HCL200 - 300 ton

Base Mounting Holes (mm)

Model / Capacity ton	Bolt Circle U	Thread Size V	Minimum Thread Depth Z	Number of Holes	Angle from Coupler
HCL50	105	M8 x 1,25	10	2	90°
HCL100	150	M12 x 1,75	17	2	90°
HCL150	185	M12 x 1,75	22	2	90°
HCL200	215	M12 x 1,75	22	3	60°
HCL250	245	M12 x 1,75	22	3	60°
HCL300	260	M16 x 2	25	3	60°

SELECTION CHART 50 - 300 TON HCL-MODELS

For 400 - 1000 ton models, see pages 58-59.
For full product features see pages 44-45.

Cylinder Capacity ton	Stroke (mm)	Model Number	Maximum Cylinder Capacity at 700 bar ton (kN)	Cylinder Efective Area (cm^2)	Oil Capacity (cm^3)	Collapsed Height A (mm)
50	50	**HCL502**	56 (550)	78,5	393	164
	100	**HCL504**			785	214
	150	**HCL506**			1178	264
	200	**HCL508**			1571	314
	250	**HCL5010**			1963	364
	300	**HCL5012**			2356	414
100	50	**HCL1002**	102 (1002)	143,1	716	187
	100	**HCL1004**			1431	237
	150	**HCL1006**			2147	287
	200	**HCL1008**			2863	337
	250	**HCL10010**			3578	387
	300	**HCL10012**			4294	437
150	50	**HCL1502**	153 (1497)	213,8	1069	209
	100	**HCL1504**			2138	259
	150	**HCL1506**			3207	309
	200	**HCL1508**			4276	359
	250	**HCL15010**			5346	409
	300	**HCL15012**			6415	459
200	50	**HCL2002**	202 (1985)	283,5	1418	238
	100	**HCL2004**			2835	288
	150	**HCL2006**			4253	338
	200	**HCL2008**			5671	388
	250	**HCL20010**			7088	438
	300	**HCL20012**			8506	488
250	50	**HCL2502**	259 (2541)	363,1	1815	249
	100	**HCL2504**			3631	299
	150	**HCL2506**			5446	349
	200	**HCL2508**			7261	399
	250	**HCL25010**			9076	449
	300	**HCL25012**			10.892	499
300	50	**HCL3002**	310 (3036)	433,7	2169	278
	100	**HCL3004**			4337	328
	150	**HCL3006**			6506	378
	200	**HCL3008**			8675	428
	250	**HCL30010**			10.843	478
	300	**HCL30012**			13.012	528

Tel: +45 63 12 83 00 | Email: ps@hymatik.com | www.hymatik.com | Hvidkaervej 27a, DK-5250 Odense SV, Denmark

Single-Acting, Lock Nut Cylinders

Capacity:
50 - 300 ton

Stroke:
50 - 300 mm

Maximum Operating Pressure:
700 bar

HCL Series



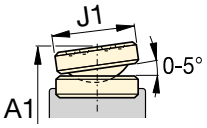

CATS-Series Tilt Saddle

Extended Height B (mm)	Outside Diameter D (mm)	Cylinder Bore Diameter E (mm)	Plunger Diameter (threaded) F (mm)	Base to Advance Port H (mm)	Standard Saddle Diameter J (mm)	Saddle Protrusion from Plunger K (mm)	Lock Nut Height S (mm)	(kg)	Model Number	Optional Tilt Saddle: Saddle Diameter J1 (mm)	Optional Tilt Saddle: Collapsed Height * A1 (mm)	Optional Tilt Saddle: Saddle Model Number
214	130	100	Tr 100 x 4	24	71	2	25	17	HCL502	71	179	CATS100
314								22	HCL504		229	
414								27	HCL506		279	
514								32	HCL508		329	
614								38	HCL5010		379	
714								43	HCL5012		429	
237	175	135	Tr 135 x 6	33	71	2	33	35	HCL1002	71	202	CATS100
337								44	HCL1004		252	
437								54	HCL1006		302	
537								63	HCL1008		352	
637								73	HCL10010		402	
737								82	HCL10012		452	
259	215	165	Tr 165 x 6	41	130	2	40	59	HCL1502	126	225	CATS201
359								73	HCL1504		275	
459								87	HCL1506		325	
559								102	HCL1508		375	
659								116	HCL15010		425	
759								130	HCL15012		475	
288	250	190	Tr 190 x 6	47	130	2	45	85	HCL2002	126	254	CATS201
388								105	HCL2004		304	
488								124	HCL2006		354	
588								143	HCL2008		404	
688								163	HCL20010		454	
788								182	HCL20012		504	
299	280	215	Tr 215 x 6	53	140	2	52	119	HCL2502	175	288	CATS300
399								143	HCL2504		338	
499								167	HCL2506		388	
599								192	HCL2508		438	
699								216	HCL25010		488	
799								240	HCL25012		538	
328	305	235	Tr 235 x 6	58	140	2	56	158	HCL3002	175	317	CATS300
428								186	HCL3004		367	
528								215	HCL3006		417	
628								244	HCL3008		467	
728								272	HCL30010		517	
828								301	HCL30012		567	

* A1 = Collapsed height including CATS-Series tilt saddle.

HCL-Series, High Tonnage Lock Nut Cylinders

ENERPAC

HCL-Series, Single-Acting, Gravity Return Cylinders

- **Lock nut provides positive and safe mechanical load holding**
- **Low-friction locking rings spin easy, save time and effort**
- **Designed to withstand 10% side-load up to 90% of maximum stroke**
- **Hardened surface resists side-loading and cyclic wear**
- **Overflow port as stroke limiter to prevent plunger blow-out**
- **Weather protected, inside and out**
- **Replaceable bearings enclose the plunger for support throughout the stroke**
- **Certified lifting eyes and base mounting holes.**

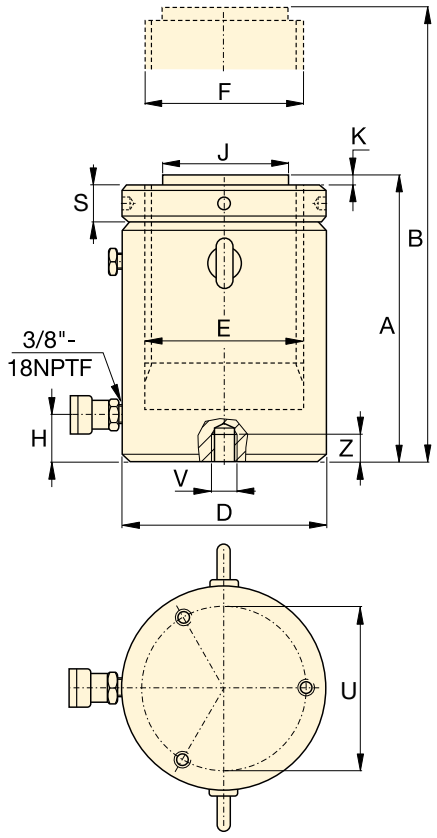

SELECTION CHART 400 - 1000 TON HCL-MODELS
For 50 - 300 ton models, see pages 56-57.
For full product features see pages 44-45.

Cylinder Capacity ton	Stroke (mm)	Model Number	Maximum Cylinder Capacity at 700 bar ton (kN)	Cylinder Efective Area (cm^2)	Oil Capacity (cm^3)	Collapsed Height A (mm)
400	50	**HCL4002**	409 (4008)	572,6	2863	317
	100	**HCL4004**			5726	367
	150	**HCL4006**			8588	417
	200	**HCL4008**			11.451	467
	250	**HCL40010**			14.314	517
	300	**HCL40012**			17.177	567
500	50	**HCL5002**	522 (5114)	730,6	3653	357
	100	**HCL5004**			7306	407
	150	**HCL5006**			10.959	457
	200	**HCL5008**			14.612	507
	250	**HCL50010**			18.265	557
	300	**HCL50012**			21.918	607
600	50	**HCL6002**	611 (5987)	855,3	4276	380
	100	**HCL6004**			8553	430
	150	**HCL6006**			12.829	480
	200	**HCL6008**			17.106	530
	250	**HCL60010**			21.382	580
	300	**HCL60012**			25.659	630
800	50	**HCL8002**	831 (8149)	1164,2	5821	430
	100	**HCL8004**			11.642	480
	150	**HCL8006**			17.462	530
	200	**HCL8008**			23.283	580
	250	**HCL80010**			29.104	630
	300	**HCL80012**			34.925	680
1000	50	**HCL10002**	1085 (10.644)	1520,5	7603	484
	100	**HCL10004**			15.205	534
	150	**HCL10006**			22.808	584
	200	**HCL10008**			30.411	634
	250	**HCL100010**			38.013	684
	300	**HCL100012**			45.616	734

Base Mounting Holes (mm)					
Model / Capacity ton	Bolt Circle U	Thread Size V	Minimum Thread Depth Z	Number of Holes	Angle from Coupler
HCL400	300	M16 x 2	25	3	60°
HCL500	340	M24 x 3	36	3	60°
HCL600	370	M24 x 3	36	3	60°
HCL800	440	M24 x 3	36	3	60°
HCL1000	500	M24 x 3	36	3	60°

Single-Acting, Lock Nut Cylinders



▲ *Heavy lifting and foundation levelling. The lock nut provides mechanical load holding over a long period of time.*

HCL Series



Capacity:
400 - 1000 ton

Stroke:
50 - 300 mm

Maximum Operating Pressure:
700 bar

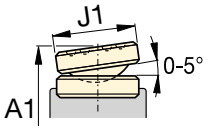

CATS-Series Tilt Saddle

Extended Height B (mm)	Outside Diameter D (mm)	Cylinder Bore Diameter E (mm)	Plunger Diameter (threaded) F (mm)	Base to Advance Port H (mm)	Standard Saddle Diameter J (mm)	Saddle Protrusion from Plunger K (mm)	Lock Nut Height S (mm)	(kg)	Model Number	Optional Tilt Saddle: Saddle Diameter J1 (mm)	Optional Tilt Saddle: Collapsed Height * A1 (mm)	Optional Tilt Saddle: Model Number
367	350	270	Tr 270 x 6	67	159	5	65	236	**HCL4002**	210	365	**CATS400**
467								274	**HCL4004**		415	
567								311	**HCL4006**		465	
667								349	**HCL4008**		515	
767								387	**HCL40010**		565	
867								425	**HCL40012**		615	
407	400	305	Tr 305 x 6	75	179	5	72	341	**HCL5002**	230	405	**CATS500**
507								390	**HCL5004**		455	
607								439	**HCL5006**		505	
707								489	**HCL5008**		555	
807								538	**HCL50010**		605	
907								587	**HCL50012**		655	
430	430	330	Tr 330 x 6	81	194	5	80	427	**HCL6002**	250	433	**CATS600**
530								484	**HCL6004**		483	
630								541	**HCL6006**		533	
730								598	**HCL6008**		583	
830								655	**HCL60010**		633	
930								712	**HCL60012**		683	
480	505	385	Tr 385 x 6	95	224	5	90	668	**HCL8002**	275	487	**CATS800**
580								746	**HCL8004**		537	
680								825	**HCL8006**		587	
780								904	**HCL8008**		637	
880								982	**HCL80010**		687	
980								1061	**HCL80012**		737	
534	570	440	Tr 440 x 6	110	249	5	105	959	**HCL10002**	300	561	**CATS1000**
634								1059	**HCL10004**		611	
734								1160	**HCL10006**		661	
834								1260	**HCL10008**		711	
934								1360	**HCL100010**		761	
1034								1460	**HCL100012**		811	

* A1 = Collapsed height including CATS-Series tilt saddle.

HCRL-Series, Double-Acting Lock Nut Cylinders

ENERPAC

▼ HCRL2006, HCRL506



- Hydraulically controlled fast retraction
- Lock nut provides mechanical load holding for a safe work environment
- Designed to withstand up to 10% side-load of maximum capacity
- Integrated tilt saddle allows up to 5 degrees of misalignment
- Hardened surface resists side-loading and cyclic wear
- Weather protected, inside and out
- Replaceable bearings enclose the plunger external and internally for support
- Certified lifting eyes, base mounting holes and collar thread as standard
- Stop-ring to prevent plunger blow-out
- Low friction lock nut, to spin easily, save time and effort.

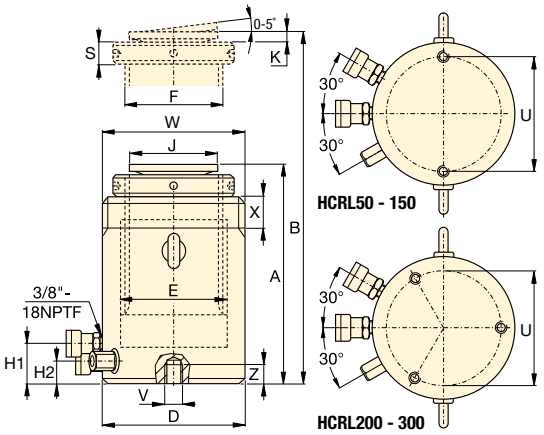

Collar Thread (mm)		
Model / Capacity ton	Thread Size W	Thread Length X
HCRL50	M130 x 2	42
HCRL100	M185 x 2	57
HCRL150	M222 x 3	70
HCRL200	M260 x 3	79
HCRL250	M290 x 3	85
HCRL300	M315 x 3	94

The collar thread length is designed for the full rated cylinder capacity.

Base Mounting Holes (mm)			
Model / Capacity ton	Bolt Circle U	Thread Size V	Minimum Thread Depth Z
HCRL50	105	M12 x 1,75	22
HCRL100	150	M12 x 1,75	22
HCRL150	185	M12 x 1,75	22
HCRL200	215	M12 x 1,75	22
HCRL250	245	M12 x 1,75	22
HCRL300	260	M16 x 2	25

SELECTION CHART 50 - 300 TON HCRL-MODELS

For full product features see pages 44-45.

Cylinder Capacity * ton	Stroke * (mm)	Model Number	Maximum Cylinder Capacity at 700 bar ton (kN)	Cylinder Effective Area (cm²)	Oil Capacity (cm³) Advance	Oil Capacity (cm³) Retract
50	150	HCRL506	49 (479)	68,4	1025	86
	200	HCRL508			1367	115
	250	HCRL5010			1709	143
	300	HCRL5012			2051	172
100	150	HCRL1006	101 (990)	141,4	2121	236
	200	HCRL1008			2827	314
	250	HCRL10010			3534	393
	300	HCRL10012			4241	471
150	150	HCRL1506	153 (1501)	214,4	3216	236
	200	HCRL1508			4288	314
	250	HCRL15010			5360	393
	300	HCRL15012			6432	471
200	150	HCRL2006	204 (2001)	285,9	4288	530
	200	HCRL2008			5718	707
	250	HCRL20010			7147	884
	300	HCRL20012			8577	1060
250	150	HCRL2506	251 (2463)	351,9	5278	530
	200	HCRL2508			7037	707
	250	HCRL25010			8796	884
	300	HCRL25012			10.556	1060
300	150	HCRL3006	303 (2969)	424,1	6362	530
	200	HCRL3008			8482	707
	250	HCRL30010			10.603	884
	300	HCRL30012			12.723	1060

* Up to 2000 ton and additional stroke lengths available on request.

Double-Acting Lock Nut Cylinders

Higher Capacities, Larger Strokes

The HCRL-Series Cylinders are available up to 2000 ton capacity and additional stroke lengths available on request.

HCRL Series



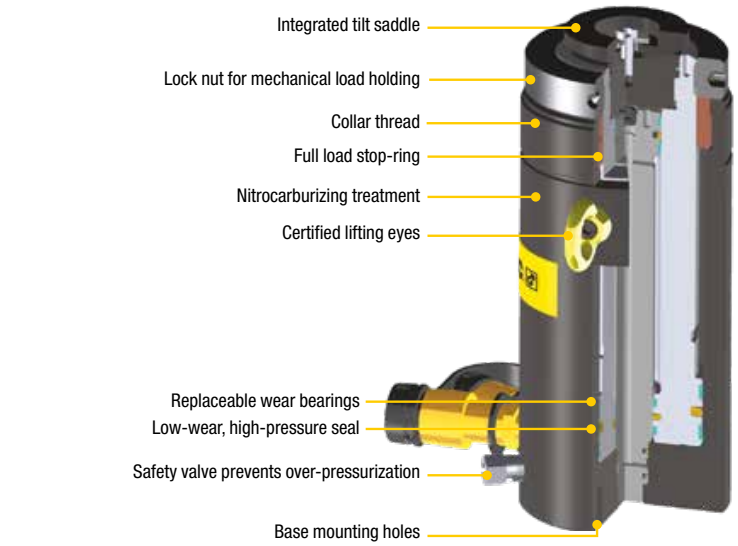

Capacity:
50 - 300 ton

Stroke:
150 - 300 mm

Maximum Operating Pressure:
700 bar



Synchronous Lifting Systems

EVO-Series pumps the multi-functional lifting system and multiple lift point capabilities.

Page: 340

	Collapsed Height A (mm)	Extended Height B (mm)	Outside Diameter D (mm)	Cylinder Bore Diameter E (mm)	Plunger Diameter (threaded) F (mm)	Base to Advance Port H1 (mm)	Base to Retract Port H2 (mm)	Saddle Diameter J (mm)	Saddle Protrusion K (mm)	Lock Nut Height S (mm)	(kg)	**Model Number**
	310	460	130	100	Tr 90 x 4	41	27	77	15	26	30	**HCRL506**
	377	577									36	**HCRL508**
	427	677									40	**HCRL5010**
	477	777									45	**HCRL5012**
	346	496	185	140	Tr 120 x 6	50	36	77	15	36	64	**HCRL1006**
	421	621									77	**HCRL1008**
	471	721									85	**HCRL10010**
	521	821									94	**HCRL10012**
	359	509	222	170	Tr 150 x 6	46	32	126	13	45	97	**HCRL1506**
	434	634									116	**HCRL1508**
	484	734									129	**HCRL15010**
	534	834									142	**HCRL15012**
	399	549	260	200	Tr 170 x 6	71	49	126	13	50	145	**HCRL2006**
	469	669									168	**HCRL2008**
	519	769									184	**HCRL20010**
	569	869									200	**HCRL20012**
	416	566	290	220	Tr 190 x 6	71	49	160	15	55	190	**HCRL2506**
	491	691									224	**HCRL2508**
	541	791									244	**HCRL25010**
	591	891									265	**HCRL25012**
	421	571	315	240	Tr 210 x 6	71	49	160	15	55	230	**HCRL3006**
	496	696									269	**HCRL3008**
	546	796									294	**HCRL30010**
	596	896									319	**HCRL30012**

Tel: +45 63 12 83 00 | Email: ps@hymatik.com | www.hymatik.com | Hvidkaervej 27a, DK-5250 Odense SV, Denmark

SC-Series, Cylinder-Pump Sets

ENERPAC

▼ SCR1010H cylinder-pump set



The Quickest and Easiest Way to Start Working Right Away

Speed Chart
See the Enerpac Cylinder Speed Chart in our 'Yellow Pages' section.
Page: 405

- **Optimum match of individual components**
- **All sets are ready-for-use**
- **Sets include 1,8 m safety hose and gauge with gauge adaptor**
- **All pumps are two-speed.**

1 **Cylinder Selection** (See Cylinder Section of this catalog for full product descriptions)	Set Capacity ton (kN)	Cylinder Model Number	Stroke (mm)	Collapsed Height (mm)
 **RC-Series, Single-Acting, General Purpose Cylinders** For maximum versatility. *Page:* 6	**5** (45)	RC55	127	216
	10 (101)	RC102	54	121
		RC106	156	248
		RC1010	257	349
	15 (142)	RC154	101	200
		RC156	152	271
	25 (232)	RC252	50	165
		RC254	102	216
		RC256	158	273
		RC2514	362	476
	50 (498)	RC506	159	282
 **RCS-Series, Single-Acting, Low-Height Cylinders** Ideal where space is restricted. *Page:* 26	**10** (101)	RCS101	38	88
	20 (201)	RCS201	45	98
	30 (295)	RCS302	62	117
	45 (435)	RCS502	60	122
	90 (887)	RCS1002	57	141
 **RCH-Series, Single-Acting, Hollow Cylinders** For pushing and pulling applications. *Page:* 34	**13** (125)	RCH121	42	120
	20 (215)	RCH202	49	162
	30 (326)	RCH302	64	178
	60 (576)	RCH603	76	247
	95 (933)	RCH1003	76	254

Single-Acting Cylinder-Pump Sets

SET SELECTION:

1. **Select the cylinder**
2. **Select the pump**
3. **Find the set model number in the gray matrix**

SELECTION EXAMPLE
Selected cylinder:
- RC106, Single-Acting cylinder with 156 mm stroke

Selected pump:
- P392, Lightweight hand pump

Set model number:
- SCR106H

Included:
- HC7206 hose
- GF10B gauge
- GA2 adaptor



GA45GC Gauge Adaptor Assembly

Protect yourself from system overloading by simply ordering one partnumber for a pre-assembled gauge, gauge adaptor and coupler.

Page: 142

SC Series



Capacity:
5 - 95 ton

Stroke:
38 - 362 mm

Maximum Operating Pressure:
700 bar



Power Box

Tool box with hand pump, gauge adaptor assembly, hose and LW-, RC-, RCS, RSM-or WR-Serie cylinder.

Page: 65

2 Pump selection (See the Pump Section in this catalog for full product descriptions.)						Accessories included		
Hand Pump P142	Hand Pump P392	Hand Pump P80	Foot Pump P392FP	XA-Series Air Pump XA11	XC-Series Cordless Pump XC1201ME [2]	Hose Model Number	Gauge Model Number	Gauge Adaptor Model Nr.
3								
SCR55H	–	–	–	–	–	HC7206	GP10S	GA4
–	SCR102H	–	SCR102FP	SCR102XA	SCR102XCE	HC7206	GF10B	GA2
–	SCR106H	–	SCR106FP	SCR106XA	SCR106XCE	HC7206	GF10B	GA2
–	SCR1010H	–	SCR1010FP	SCR1010XA	SCR1010XCE	HC7206	GF10B	GA2
–	SCR154H	–	SCR154FP	SCR154XA	SCR154XCE	HC7206	GP10S	GA2
–	SCR156H	–	SCR156FP	SCR156XA	SCR156XCE	HC7206	GP10S	GA2
–	SCR252H	–	SCR252FP	SCR252XA	SCR252XCE	HC7206	GF20B	GA2
–	SCR254H	–	SCR254FP	SCR254XA	SCR254XCE	HC7206	GF20B	GA2
–	SCR256H	–	–	SCR256XA	SCR256XCE	HC7206	GF20B	GA2
–	–	SCR2514H	–	SCR2514XA [1]	–	HC7206	GF20B	GA2
–	–	SCR506H	–	SCR506XA [1]	–	HC7206	GF50B	GA2
–	SCL101H	–	SCL101FP	SCL101XA	–	HC7206	GF10B	GA2
–	SCL201H	–	SCL201FP	SCL201XA	–	HC7206	GF230B	GA2
–	SCL302H	–	SCL302FP	SCL302XA	SCL302XCE	HC7206	GF230B	GA2
–	SCL502H	–	SCL502FP	SCL502XA	SCL502XCE	HC7206	GF510B	GA2
–	–	SCL1002H	–	–	SCL1002XCE	HC7206	GF510B	GA2
SCH121H	–	–	–	–	–	HB7206	GF120B	GA4
–	SCH202H	–	SCH202FP	SCH202XA	SCH202XCE	HC7206	GF813B	GA3
–	SCH302H	–	SCH302FP	SCH302XA	SCH302XCE	HC7206	GF813B	GA3
–	–	SCH603H	–	SCH603XA [1]	SCH603XCE	HC7206	GF813B	GA3
–	–	SCH1003H	–	–	–	HC7206	GP10S	GA2

[1] With XA12 air pump.
[2] Cordless Pump includes 230V Charger. For 115V charger replace the "E" by the "B" in the model number.

Tel: +45 63 12 83 00 | Email: ps@hymatik.com | www.hymatik.com | Hvidkaervej 27a, DK-5250 Odense SV, Denmark

Extreme Environment Products

ENERPAC

▼ From left to right: **P142ALSS, P392ALSS, V152NV, V66NV, RC256NV, RC106NV, RC53NV**



RC, P, V Series

Cylinder Capacity:
5 - 25 ton

Stroke:
51 - 156 mm

Maximum Operating Pressure:
700 bar

Applications
For use in wet environments such as food processing, pulp and paper, mining, construction and applications in high temperature or in welding areas.

- **Corrosion resistant, nickel-plated valves and cylinders**
- **Stainless steel pump inserts will not corrode**
- **Viton® Seals provide heat and chemical resistance**
- **Anodized aluminum pump reservoirs and plastic encapsulated pump bodies resist wet environments**
- **Two-speed operation reduces pump handle strokes 78% compared to single-speed pumps**
- **Pump handles lock for easy carrying.**



Multifluid Hand Pumps
MP-Series corrosion resistant hand pumps for low pressure filling and high pressure testing applications, suitable for a wide range of fluids.

Page: 82



Cylinder Capacity ton (kN)	Stroke (mm)	Model Number *	Oil Capacity (cm^3)	Pressure Rating (bar)	Collapsed Height (mm)	Extended Height (mm)	Outside Diameter (mm)	(kg)
5 (45)	76	**RC53NV**	50	700	165	241	38	1,5
10 (101)	51	**RC102NV**	78	700	121	175	57	2,3
10 (101)	156	**RC106NV**	225	700	247	403	57	4,4
25 (232)	156	**RC256NV**	528	700	273	431	85	10,0



Pump Type	Oil Capacity (cm^3)	Model Number *	Pressure Rating (bar)	Oil Displacement per Stroke (cm^3)	Port Dimension (NPTF)	Piston Stroke (mm)	(kg)
Two Speed	327	**P142ALSS**	14 / 700	3,62 / 0,90	1/4"-18	12,7	2,0
	901	**P392ALSS**	14 / 700	11,26 / 2,47	3/8"-18	25,4	4,1



Valve Type	Model Number *	Function	Pressure Rating (bar)	(kg)
Manual Check Valve	**V66NV ***	Load holding with cylinders	700	1,8
Pressure Relief Valve	**V152NV ***	Limits system pressure, ± 3% repeatability	55 -700	1,6

* For cylinder details see pages 7-9; for pump details see pages 76-77; for valve details see pages 144-145.

Power Box – Portable Tool Sets

▼ SCR154PGH



SC, SL, SR, SW Series



Capacity:
1 - 45 ton

Stroke:
11 - 156 mm

Maximum Operating Pressure:
700 bar

- **Easy to carry sturdy tool box**
- **Complete and ready-to-use hydraulic sets**
- **Includes a single-acting cylinder, P392 two-speed lightweight hand pump, gauge adaptor assembly, and 1,8 metres hose HC7206C and couplers**
- **All components ship inside tool box as one package.**



Gauge Adaptor Assembly

Power Box Sets include 45 degree angled gauge adaptor assembly for improved safe working conditions.

Page: 127

	Cylinder Model	Cylinder Stroke (mm)	Cylinder Capacity **ton** (kN)	(kg)	Power Box Model Number
	**Lifting Wedge**				
	LW16	21	**16** (157)	9,0	**SLW16PGH** [2]
	**Wedge Spread Cylinder**				
	WR5	94 [1]	**1,0** (8,9)	12,0	**SWR5PGH**
	**General Purpose Cylinders**				
	RC102	54	**10** (101)	12,3	**SCR102PGH**
	RC106	156	**10** (101)	14,4	**SCR106PGH**
	RC154	101	**15** (142)	15,0	**SCR154PGH**
	RC156	152	**15** (142)	16,8	**SCR156PGH**
	**Low-Height Cylinders**				
	RCS101	38	**10** (101)	14,1	**SCL101PGH**
	RCS201	45	**20** (201)	15,0	**SCL201PGH**
	**Low-Height Cylinders**				
	RSM100	11	**10** (101)	11,4	**SRS100PGH**
	RSM200	11	**20** (201)	13,1	**SRS200PGH**
	RSM300	13	**30** (295)	14,5	**SRS300PGH**
	RSM500	16	**45** (435)	16,8	**SRS500PGH**

[1] Maximum spread of WR5.
[2] With P142 two-speed lightweight hand pump.

▼ *The Power Box – the portable tool set – applicable everywhere.*



JH, JHA-Series, Aluminium and Steel Jacks

ENERPAC

▼ Shown from left to right: **JHA356, JHA156**



JH, JHA Series

Capacity:
7 - 100 ton

Stroke:
76 - 155 mm

Maximum Operating Pressure:
700 bar

- **All-directional operation on 7, 15 and 35 ton JHA-series**
- **Internal relief valve to prevent overloading**
- **Machined flat front and bottom surfaces permit flush alignment in tight corners**
- **Chrome plated plungers**
- **Pumping handle included**
- **Automatic by-pass port to prevent over-extension (JH-series).**



Lifting Wedge and Machine Lifts

Ideal to lift the load the first few centimeters. The **LW16** Lifting Wedge requires a very small access gap of only 10 mm.

Page: 182



Load Skates

For moving heavy loads easily and safely.

Page: 184

Style	Jack Capacity ton (kN)	Stroke (mm)	Model Number	Jack Effective Area (cm^2)	Collapsed Height (mm)	Extended Height (mm)	Bottom Plate Dimensions W x L (mm)	Plunger Diameter (mm)	Pump Speed	(kg)
Aluminium Jacks	**7** (62)	76	**JHA73**	9,6	133	209	73 x 158	30,2	Single	5,0
	15 (133)	153	**JHA156**	20,3	247	401	92 x 238	41,4	Single	13,2
	35 (311)	155	**JHA356**	45,6	257	412	117 x 254	54,1	Single	18,1
Steel Jacks	**30** (267)	155	**JH306**	38,3	254	409	95 x 242	69,9	Single	26,8
	50 (445)	154	**JH506**	62,1	260	414	127 x 258	88,9	2-Speed	40,8
	100 (890)	153	**JH1006**	133,1	287	440	181 x 328	130,1	2-Speed	74,4

Industrial Steel Bottle Jacks

▼ Shown: **GBJ010A, GBJ030A, GBJ003A**



GBJ Series



Capacity:
2 - 100 ton

Stroke:
62 - 460 mm



Screw Extension Feature

Heat treated, adjustable extension screw with cleated saddle on selected GBJ models helps adjusting and prevents slipping.

- **Lower handle effort reduces operator fatigue**
- **Fully serviceable**
- **High-strength beam and pump linkage for long life**
- **Pumping handle included on all models**
- **Safety relief valve to prevent overload**
- **Automatic by-pass port to prevent over-extension**
- **Wiper seal for extended life**
- **Thick base material with large area for increased strength and stability during lifting**
- **Positioning handle on 20 ton through 50 ton models.**

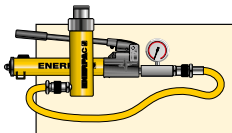

Cylinder-Pump Sets

As an alternative to bottle jacks where the operator is required to stand remote from the jacking point, see our range of cylinder-pump sets.

Page: 62

Capacity ton (kN)	Stroke (mm)	Model Number	Screw Extension (mm)	Min. Height (mm)	Max. Height (mm)	Plunger diameter (mm)	Saddle Diameter (mm)	Bottom Dimensions W x L (mm)	(kg)
2 (19,6)	460	**GBJ002LA**	-	570	1030	29	-	127 x 127	10,0
3 (29,4)	105	**GBJ003A**	65	168	338	24	23,5	75 x 116	3,7
5 (49,0)	150	**GBJ005A**	75	212	437	29	28,5	75 x 125	4,5
8 (78,4)	150	**GBJ008A**	75	219	444	37	38,0	90 x 144	6,2
10 (98,0)	150	**GBJ010A**	75	219	444	37	38,0	90 x 144	6,4
10 (98,0)	62	**GBJ010SA**	30	131	223	37	38,0	90 x 144	5,0
15 (147,0)	150	**GBJ015A**	75	228	453	45	45,0	112 x 163	8,8
20 (196,0)	150	**GBJ020A**	75	234	459	51	61,0	120 x 172	10,6
20 (196,0)	105	**GBJ020SA**	55	190	350	51	61,0	120 x 172	9,5
30 (294,0)	150	**GBJ030A**	75	242	467	58	69,0	144 x 196	15,5
50 (490,0)	140	**GBJ050A**	-	260	400	80	80,0	165 x 214	27,0
100 (980,0)	150	**GBJ100**	-	300	450	110	94,0	296 x 333	87,0

All GBJ Jacks meet or exceed: ANSI, PALD, CE.

▼ *Enerpac heavy-duty bottle jacks make lifting loads easier.*



PR-Series, POW'R-RISER® Lifting Jack

ENERPAC

▼ Shown: **PRASA10027L and accessory Locking U-Rings**



Safe, Efficient, Mobile Load Lifting

- **54, 90, 136 and 181 ton capacities with pneumatic or electric pumps for the toughest jobs**
- **102 mm ground clearance for transport over rail and rough terrain**
- **Double-acting cylinder**
- **Three position handle provides easy tilt back and transport**
- **Complies with ASME/ANSI B30:1 2015 and CE specifications**
- **Easy to change external filter minimizes down time**
- **Rugged, fully enclosed 610 mm wide frame with no exposed fittings or hoses**
- **SUP-R-STACK™ Extension System allows lifting at all heights without blocking.**

Pendant cord

Supplied with 3,5 m pendant cord for air driven units with pneumatic valves and 6 m pendant cord for electric driven units keeps operator away from the load.



POW'R-LOCK™ – Self-Locking Mobile Lift System

A self-locking jack that performs automatic locking during lifting, lowering and holding.

See the Enerpac **PL-Series**

Page: 70



◀ *Enerpac POW'R-RISER® used in mining operations to lift heavy equipment.*

Capacity ton (kN)	Stroke (mm)	Model Number with Electric Pump (230V - 1 ph - 50Hz)	(kg)
54 (533)	356	**PREME06014L**	177
	686	**PREME06027L**	272
90 (889)	406	**PREME10016L**	231
	686	**PREME10027L**	272
	406	–	-
	686	–	-
136 (1333)	394	–	-
	673	–	-
	394	**PREME15016L**	258
	673	**PREME15027L**	321
181 (1778)	388	–	-
	617	–	-

POW'R-RISER® Lifting Jack



SUP-R-STACK Extensions

Increase useful height from 127 to 457 mm.

Model No.	Size (mm)	Model No.	Size (mm)
PRE5	127	PRE11	279
PRE7	178	PRE14	356
PRE9	229	PRE18	457
PRES6024	Extension set includes **PRE5, PRE7, PRE11** and **PRE18**.		



Spacers

Fine tune your extension stack height.

Model No.	Size (mm)	Model No.	Size (mm)
PRS1	25	PRS3	76
PRS2	51	–	–
PRS4	Set includes (2x) **PRS1,** (1x) **PRS2** and (1x) **PRS3**.		

Cap. (kN)	Swivel Load Saddle	Locking U-Rings 25 mm	76 mm	114 mm	140 mm	254 mm	Set Model Number	Locking U-Ring Sets Include: Quantity & model numbers 2x	1x	2x	1x
533	PRTS60	PRU11	PRU13	PRU14	–	PRU110	[1] PRUS126	PRU11	PRU13	PRU14	–
							[2] PRUS137	PRU11	PRU13	PRU14	PRU110
889	PRTS60	PRU11	PRU13	PRU14	–	PRU110	[1] PRUS126	PRU11	PRU13	PRU14	–
							[2] PRUS137	PRU11	PRU13	PRU14	PRU110
1333	PRTS150	PRU151	PRU153	–	PRU155	PRU1510	[3] PRUS1526	PRU151	PRU153	PRU155	–
							[2] PRUS1537	PRU151	PRU1510	PRU155	–
1778	PRTS200	PRU201	PRU203	–	PRU205	PRU2010	[3] PRUS2026	PRU201	PRU203	PRU205	–
							[2] PRUS2037	PRU201	PRU2010	PRU205	–

[1] For 356 mm and 406 mm stroke models
[2] For 686 mm stroke models
[3] For 394 mm stroke models.

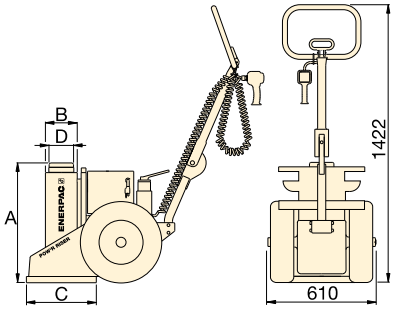

	Model Number with Air Pump	(kg)	A (mm)	B (mm)	C (mm)	D (mm)	Max. Additional Stack Height Using Optional Extension (mm)	Valve Type
	PRAMA06014L	177	610	162	356	102	813*	Manual
	PRAMA06027L	272	940	162	356	102	279	
	PRAMA10016L	231	660	178	457	102	533**	
	PRAMA10027L	272	940	178	457	102	279	
	PRASA10016L	231	660	178	457	102	533**	Pneumatic
	PRASA10027L	272	940	178	457	102	279	
	PRASA15016L	258	660	203	457	127	533**	
	PRASA15027L	321	940	203	457	127	279	
	-	-	660	203	457	127	533**	Manual
	-	-	940	203	457	127	279	
	PRASA20016L	290	660	241	508	165	533**	Pneumatic
	PRASA20027L	374	940	241	508	165	279	

* Based on one 457 mm and one 279 mm extension and one 76 mm spacer.
** Based on one 457 mm extension and one 76 mm spacer.

PR Series



Rated Lifting Capacity:
54 - 181 ton

Stroke:
356 - 686 mm

Maximum Operating Pressure:
700 bar



Locking U-Rings

For safe mechanical cribbing of a lifted load, accessory Locking U-Rings can be placed around an extended piston and come in four lengths for each POW'R-RISER® capacity, and are available individually or in sets. Locking U-Rings are accommodated by storage racks integral to the POW'R-RISER®.

WARNING!

Extensions: Any two extensions may be stacked for loads up to 54 ton. For loads over 54 ton or strokes over 356 mm only one extension and one spacer can be used.

Spacers: Never exceed 76 mm in total spacer height.

For power source, the following characters should be inserted in the 5th space of the model number.

Ordering Example:
Model No. PREME06014L is a 356 mm stroke, 54 ton model, with a manual valve and a 230 VAC, 1-ph, 50 Hz electric motor.

A Air Pump, 1416 l/min air consumption at 5,5 bar
B 115 VAC, 1ph., 50-60 Hz, 20 A
E 208-240 VAC, 1-ph., 50-60 Hz, Euro Plug, 10 A
I 208-240 VAC, 1-ph., 50-60 Hz, USA Plug, 10 A
G [1] 208-240 VAC, 3-ph., 50-60 Hz
W [1] 380-415 VAC, 3-ph., 50-60 Hz
J [1] 440-480 VAC, 3-ph., 50-60 Hz
R [1] 575 VAC, 3-ph., 50-60 Hz.

[1] Not available for 54 ton capacity.

PL-Series, POW'R-LOCK™ Mobile Lift System

ENERPAC

▼ Shown: **PL20025-ASA** and **PL20014-ASA**



Efficient Lifting with Continuous Automatic Load Locking

- **Provides continuous locking protection during lift, lower and hold functions**
- **Patent-pending control technology synchronizes cylinder and lock nut for smooth and efficient lifting and lowering**
- **Unique double-acting cylinder offers a low collapsed height to accomodate more lifting applications**
- **Simple 2-button pendant allows operation of raise and lower functions from up to 6,1 metres away**
- **All load-bearing cylinder components have a nitrocarburized treatment to improve wear characteristics and resist corrosion**
- **Ergonomic handle has six positions for comfortable handling and folds when not in use**
- **Meets ANSI/ASME B30.1-2015, AS/NZS-2538, AS/NZS-2693 certification criteria.**

POW'R-LOCK™ Self-Locking Lift System

Only the POW'R-LOCK™ Lift System provides continuous positive locking of the load through all stages of lifting and lowering. No operator intervention is required to activate or de-activate the automatic locking system.

Two different stroke lengths are available. Both models are powered by an external compressed air system (user-supplied).

A convenient two-button pendant controls operation of the Lift System's air motor and directional control valve.



Tilt Load Cap

All POW'R-LOCK™ Lift System models feature a Tilt Load Cap to reduce side-loading.

Safety First

When lifting large, heavy vehicles certain precautions must be followed. Follow your published safety directions for lifting and cribbing your loads. The Pow'R-LOCK™ Lift System provides load/lock protection, but you must follow the safety directions for load cribbing operations.



◀ *The PL-Series POW'R-LOCK™ Portable Lift System.*

POW'R-LOCK™ Mobile Lift System

Accessories

Flat Load Cap – Non-tilt load cap has lower profile for tight lifting spaces.

Extensions – Stackable, with large alloy steel locating studs to resist effects of side-loading.

Spacers – Minimize gap between load cap and lifting point to maximize hydraulic stroke of the jack.

Extension Base Adapter – Extension Base Adapter design eliminates risk of improper stacking when using more than one extension.

PL Series



Rated Lifting Capacity:
181 ton

Stroke:
356 - 622 mm

Maximum Operating Pressure:
700 bar

	Model Number	Description	Height (mm)	PL20014-ASA	PL20025-ASA
	**PLC1**	Flat Load Cap	34	x	x
	**PLS1**	Spacer	26	x	x
	PLS2	Spacer	51	x	x
	**PLE5**	Extension	127	x	x
	PLE7	Extension	178	x	x
	PLE9	Extension	229	x	x
	PLE11	Extension	280	x	–
	PLE14	Extension	356	x	–
	**PLB12**	Extension base adapter	305	x	–

WARNING!

PLE11 and **PLE14** Extensions and **PLB12** Extension Base Adapter are to be used with the "short" model **PL20014-ASA** only. Use of these extensions on the "tall" model **PL20025-ASA** will result in an excessive maximum lifting height. Load could become unstable and drop, resulting in possible personal injury and/or property damage.

Model Number	Maximum Additional Stack Height *
PLS20014-ASA	712 mm
PLS20025-ASA	229 mm

* Using optional PLB and PLE-Series extensions and PLS-Series spacers. Load cap height is NOT included in the stack height.



PR-Series, POW'R-RISER® Mobile Lifting Jack

When automatic load-locking is not required, the POW'R-RISER® jack provides a mobile lifting solution.

Page: 68

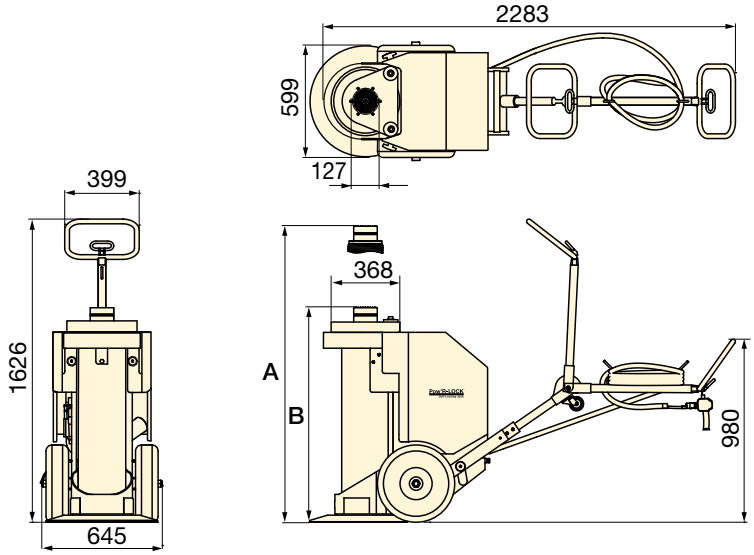

Capacity ton (kN)	Stroke (mm)	Model Nr. with Air Pump	Cylinder Lifting Speed [1] (mm/min) Load	No Load	Recommended Air Supply [2] (l/min)	(bar)	A [3] (mm)	B [3] (mm)	(kg)
181	356	**PL20014-ASA**	51	61	3681 - 4247	3,8 - 6,9	1219	864	501
(1779)	622	**PL20025-ASA**	51	61			1778	1156	599

[1] Depending on available airflow, regulator setting, pump speed and load weight.

[2] Minimum dynamic air pressure of 3,8-4,1 bar. 6,2-6,9 bar required to achieve 1779 kN capacity.

[3] Height A and B are with Swivel Load Cap installed. Subtract 51 mm if flat load cap is used.

Custom Hydraulic Cylinders

ENERPAC

There's no substitute for experience in customizing hydraulic cylinders and Enerpac meets the needs of the most demanding applications.

Cylinders are the primary workhorse in hydraulic systems required to push or pull. Although Enerpac offers a wide variety of cylinders to fit many application requirements, there are many applications that require customization.

These may include special corrosion protection, ability to handle extreme side loads, or having special mounting needs.



◀ *Large capacity, double-acting lock nut cylinders with an external lock ring used for bridge work.*



◀ *Double-acting cylinders with pilot-operated check valves and rod eyes on both ends for lifting and positioning applications.*



◀ *Custom private-label cylinders for OEM applications.*

Overview Custom Cylinders



▲ *Custom 500 ton double-acting cylinders with 1,83 m stroke for lifting electric rope shovels.*

CUSTOMIZABLE FEATURES:

- Stroke
- Capacity
- Paint
- Pressure Rating
- Fitting
- Special Attachments
- Seals
- Imbedded Sensors
- Collapsed Height
- Rod Modifications
- Special Mounting
- Corrosion Resistance



Custom Hydraulic Pumps

Enerpac offers a wide variety of hydraulic pumps for all your custom needs. Still, many applications require a customized pump to operate the system.

Page: 120

Overview Enerpac Heavy Lifting Capabilities



SFP-SERIES, SPLIT-FLOW PUMPS
The split-flow pump is an economical solution for multi-point controlled lifting applications. Split-Flow pumps distribute an equal amount of hydraulic oil to a maximum of 8 outlets.



EVO-SERIES, SYNCHRONOUS LIFTING SYSTEMS
EVO-pumps: modular and multi-functional system to control 4, 8 or 12 lifting points. Network capability to link up to 48 lifting points with 4 EVO-units.



SCJ-SERIES, SELF-LOCKING CUBE JACKS
Compact incremental lifting system with automated mechanical locking. Safe, more efficient alternative to the jack-and-pack method with wooden cribbing. Cube Jack utilizes base lifting frames and self-aligning, lightweight steel cribbing blocks.



BLS-SERIES, CLIMBING JACKS
Double-acting stage lift cylinders with solid plunger design allows for a load to be lifted many times the stroke of the cylinder. The solution for incremental lifting.



JS-SERIES, JACK-UP SYSTEMS
The jack up system is a custom developed multi-point incremental lifting system – synchronously lift and mechanically hold. A typical system setup includes four jack up units positioned under each corner of a load.



HSL-SERIES, STRAND JACKS
Compact high capacity system for controlled lifting and lowering. Strand jack systems that provide fully controlled precise lifting.



SHS, SHAS-SERIES, SYNCHOIST
High precision hoisting and load positioning systems to enhance a crane's capability. SHAS-Series, – Wireless remote control and integrated hydraulics.



ML, SL, SBL-SERIES, HYDRAULIC GANTRIES
Telescopic hydraulic gantries are heavy lifting systems that offer control and stability, even in confined spaces. Wireless control system is included and offer superior safety and control for your most demanding lifting and rigging operations.



HSK, LH-SERIES, SKIDDING SYSTEMS
A system comprised of a series of skid-shoes powered by hydraulic push-pull cylinders, traveling over a pre-constructed track. LH-Series includes low-height skid beams that can fit in tight spaces while still offering high capacity.

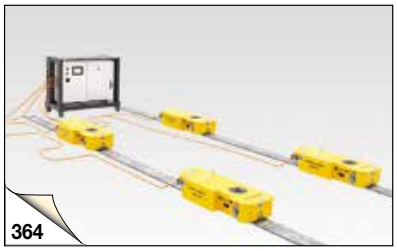

ETR-SERIES, ELECTRIC TROLLEY SYSTEMS
Safe & synchronized travel. The ETR-System is comprised of electrically-driven trolleys which can carry heavy loads along a fixed track system. The entire system is controlled by a hand held wireless control system.

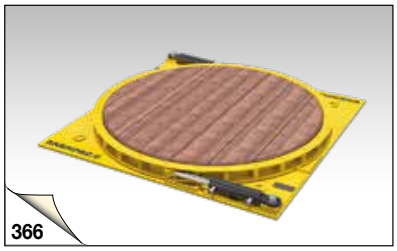

ETT-SERIES, HYDRAULIC TURNTABLES
Safe and controlled rotation. The ETT-Series is your solution for rotating heavy loads during, before or after a lifting and skidding operation.



SPMT-SELF-PROPELLED MODULAR TRANSPORTER
A trailer with a slim design to transport large and heavy objects. Hydraulic strength in a linear drive transport system.

Hydraulic Pumps and Directional Valves

ENERPAC

Enerpac hydraulic pumps are available in over 1000 different configurations. Whatever your high-pressure pump needs are... speed, control, intermittent or heavy duty cycle or pumps for multiple lift point capabilities and synchronous lifting systems, you will find an Enerpac pump suited to the application.

Featuring Hand, Battery, Electric, Air and Gasoline powered models, with multiple reservoir and valve configurations, Enerpac offers the most comprehensive pump line available.



Pump Selection

For help in selecting the correct pump for your application, please view our **'Yellow Pages'**. If you require further assistance, contact the Enerpac office located near you.

Page: 398



Torque Pumps

System matched air and electric pumps provide control to operate Enerpac Torque Wrenches.

Page: 265



Pumps for Multiple Lift Point Capabilities

The **SFP-Serie Split-Flow Pumps** are an economical solution for multi-point controlled lifting and lowering applications and a far better alternative than using separately operated pumps.

Pumps for Synchronous Lifting Systems

The multi-functional **EVO-Series** lifting system to control 4, 8, 12 upto 48 lifting points.

Page: 335

Pumps and Directional Valves Section Overview

Power Source	Pump Types	Maximum Reservoir Capacity (litres)	Max. Flow at Rated Pressure (l/min)	Maximum Power Consumption	Series		Page
Manual	**Lightweight Hand Pumps** Exclusively from Enerpac	2,5	2,47 (cm^3/stroke)	–	P		76 ▶
	ULTIMA Steel Hand Pumps **Low Pressure Hand Pumps**	7,4 3,3	4,75 9,50	– –	P P		78 ▶ 80 ▶
	Multifluid Hand Pumps Pumping Fluids up to 1000 bar	–	20,6 (cm^3/stroke)	–	MP		82 ▶
	Foot Pump For Hands Free Operation	0,5	2,47 (cm^3/stroke)	–	P		83 ▶
	Ultra-High Pressure Hand Pumps Pressure up to 2800 bar	1,0	2,49 (cm^3/stroke)	–	P, 11		84 ▶
Electric	**Battery Powered Hydraulic Pumps** Portable Cordless zero emission pump	2,0	0,25	0,37 (kW)	XC		86 ▶
	Battery Powered Hydraulic Pumps Cordless, zero emission pump	8,0	0,52	1,0 (kW)	ZC		88 ▶
	Economy Pump Series Compact and Portable	3,8	0,32	0,37 (kW)	PU		90 ▶
	Z-Class Pumps, ZE2-Series Durable, reliable, easy to use	6,8	0,27	0,56 (kW)	ZE2		92 ▶
	E-Pulse® Hydraulic Pumps High Productivity, Innovative Design	3,0	0,50	0,63 (kW)	E E-Pulse®		94 ▶
	Z-Class Pumps Portable Hydraulic Power	39	1,0	1,25 (kW)	ZU		98 ▶
	Z-Class Pumps Powerful and Heavy-Duty	39	2,73	5,60 (kW)	ZE		104 ▶
Air	**Air Hydraulic Pumps** Single and Twin-Air Motor	1,3 8,0	0,13 0,15	255 (l/min) 510 (l/min)	PA PAM		110 ▶ 111 ▶
	Turbo II Air Hydraulic Pumps Compact Air Over Hydraulic	5,0	0,16	340 (l/min)	PATG		112 ▶
	Air Hydraulic Foot Pumps For Productivity and Ergonomics	2,0	0,25	991 (l/min)	XA		114 ▶
	Z-Class Air Hydraulic Pumps Modular Air Pumps	39	1,31	2840 (l/min)	ZA		116 ▶
Gasoline	**Z-Class Gasoline Hydraulic Pumps** Gas Powered High Flow Pumps	39	1,64	4,8 (kW)	ZG5		118 ▶
	Z-Class Gasoline Hydraulic Pumps Gas Powered High Flow Pumps	39	3,30	9,7 (kW)	ZG6		118 ▶
Directional Control Valves Manual and Solenoid Valves, pump and remote mounted					VM, VE VC		121 ▶

Tel: +45 63 12 83 00 | Email: ps@hymatik.com | www.hymatik.com | Hvidkaervej 27a, DK-5250 Odense SV, Denmark

P-Series, Lightweight Hand Pumps

ENERPAC

▼ Shown from top to bottom: **P802, P842, P202, P142**



- **Lightweight and compact design**
- **Durable glass-filled nylon reservoir and nylon encapsulated aluminium pump base for maximum corrosion resistance**
- **Two-speed operation reduces handle strokes by as much as 78% over single speed pumps**
- **Lower handle effort to minimize operator fatigue**
- **Integral 4-way valve on P842 for operation of double-acting cylinders**
- **Handle lock and lightweight construction for easy carrying**
- **Large oil capacities to power a wide range of cylinders or tools**
- **Non-conductive fiberglass handle for improved operator safety**
- **Internal pressure relief valve for overload protection.**

Exclusively from Enerpac

Cylinder Matching Chart

For help in selecting the correct hand pump for your application, please refer to the Cylinder Matching Chart located in the 'Yellow Pages'.

Page: 398

Speed Chart

To determine how a specific pump will operate your cylinder, see the Pump-Cylinder Speed Chart in the 'Yellow Pages'.

Page: 405



Tank Kits:

When a return-to-tank port is required, the Tank Kits provide a $^{7}/_{16}$"-20 UN port at the rear of the reservoir.

PC20	Fits P141, P142
PC25	Fits P202, P391, P392



Power Box

Portable tool box with **P392** hand pump, gauge adaptor assembly, hose and RC-, RCS, RSM-or WR-Serie cylinder.

Page: 65

▼ *Cylinder-pump set SCR254H used to support the construction while monitoring pressure and load with the gauge.*



Pump Type	Usable Oil Capacity (cm^3)	Model Number	Pressure Rating [2] (bar) 1st stage	Pressure Rating [2] (bar) 2nd stage	Oil Displacement per Stroke (cm^3) 1st stage	Oil Displacement per Stroke (cm^3) 2nd stage	Max. Handle Effort (kg)
Single-Speed	327	**P141**	-	700	-	0,90	32,7
	901	**P391**	-	700	-	2,47	38,6
Two-Speed	327	**P142** [1]	13	700	3,62	0,90	35,4
	901	**P202**	13	700	3,62	0,90	28,6
	901	**P392** [1]	13	700	11,26	2,47	42,2
	2540	**P802**	27	700	39,33	2,47	43,1
	2540	**P842** [3]	27	700	39,33	2,47	43,1

[1] Available as set, see note on next page. P392 also available in Power Box Set (page 65).
[2] Contact Enerpac for applications where operating pressure is less than 10% of pressure rating.
[3] P842 for use with double-acting cylinders

Lightweight Hand Pumps

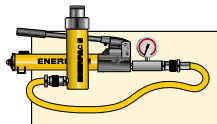

Pump-Cylinder Sets

All pumps marked with an * are available as **sets** (pump, cylinder, gauge, couplers and hose) for your ordering convenience.

Page: 62

P Series



Reservoir Capacity:
327 - 2540 cm³

Flow at Rated Pressure:
0,90 - 2,47 cm³/stroke

Operating Pressure:
700 bar

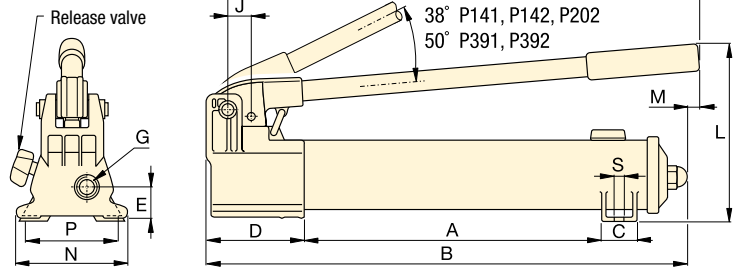

P141, P142, P202, P391, P392

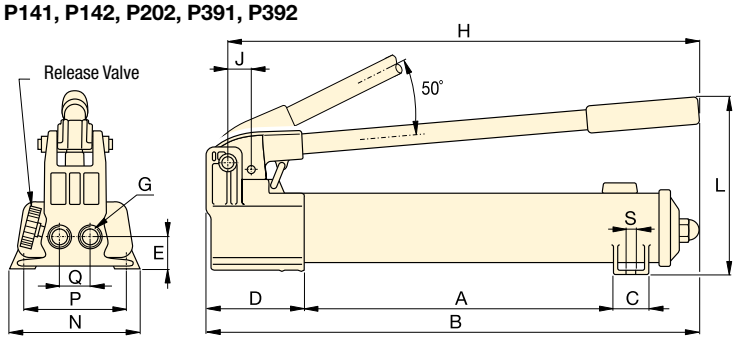

P802

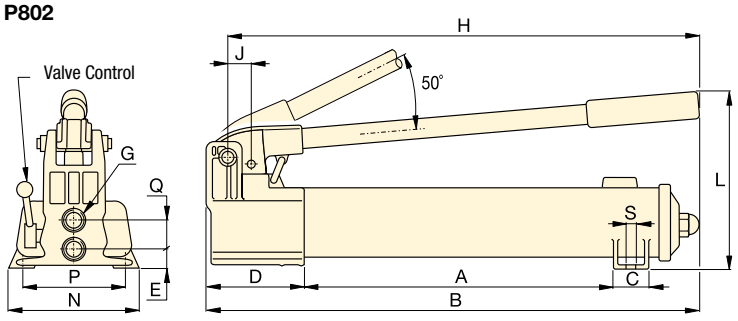

P842



Hoses

Enerpac offers a complete line of high quality hydraulic hoses. To ensure the integrity of your system, specify only genuine Enerpac hydraulic hoses.

Page: 128



GA45GC Gauge Adaptor

Protect yourself from system overloading by simply ordering one part number for a pre-assembled gauge, adaptor block and coupler.

Page: 142



Foot Pump P392FP

For handsfree operation the lightweight and robust **P392FP** Foot Pump is the perfect choice.

Page: 83

Piston Stroke	Dimensions (mm)														Weight	Model Number
(mm)	A	B	C	D	E	G	H	J	L	M	N	P	Q	S	(kg)	
12,7	185	336	28	85	28	¼"-18 NPTF	319	19	143	–	95	80	–	7	2,4	**P141**
25,4	344	533	36	99	33	⅜"-18 NPTF	522	30	177	16	120	–	–	–	4,1	**P391**
12,7	185	336	28	85	28	¼"-18 NPTF	319	19	143	–	95	80	–	7	2,4	**P142** [1]
12,7	344	509	36	85	28	¼"-18 NPTF	400	19	144	16	95	–	–	–	3,4	**P202**
25,4	344	533	36	99	33	⅜"-18 NPTF	522	30	177	16	120	–	–	–	4,1	**P392** [1]
25,4	337	552	45	133	35	⅜"-18 NPTF	527	30	228	–	181	153	35	10	8,2	**P802**
25,4	337	552	45	133	20	⅜"-18 NPTF	527	30	228	–	181	153	36	10	10,0	**P842** [3]

P-Series, ULTIMA Steel Hand Pumps

ENERPAC

▼ Shown from left to right: **P77, P80, P84, P801, P39**



The Solution for Tough Jobs

- **Reduced handle effort and ergonomic grip for less operator fatigue**
- **Two-speed operation for fast and easy operation (except P39)**
- **Vent free reservoir eliminates spills**
- **Quick grip handle allows for easy transport**
- **Integral reservoir over-pressurization protection**
- **All steel construction, chrome plated plunger and wiper system for durable, long lasting performance**
- **4-way valving on the P84 and P464 for operation of double-acting cylinders.**

Two Speed Pumps

Recommended for applications where cylinder plunger must advance rapidly to load contact, and applications where greater oil capacities are required, such as multiple cylinder hook-ups.



Foot Pump Conversion Kits

Convert your P39, P77, P80 or P801 to foot power with the **PC11** Kit. Includes instructions for easy conversion.



GA45GC Gauge Adaptor

Protect yourself from system overloading by simply ordering one part number for a pre-assembled gauge, adaptor block and coupler.

Page: 142



4-Way Control Valve

P84 and **P464** feature a manual 4-way control valve, designed for use with one double-acting or two single-acting cylinders. For system set-up information:

Page: 400

▼ *In the absence of a power supply, the P80 Hand Pump offers a powerful solution.*



Pump Type	Usable Oil Capacity (cm^3)	Model Number	Pressure Rating [2] (bar) 1st stage	Pressure Rating [2] (bar) 2nd stage	Oil Displacement per Stroke (cm^3) 1st stage	Oil Displacement per Stroke (cm^3) 2nd stage	Max. Handle Effort (kg)
Single	672	**P39**	-	700	-	2,46	39
Two-Speed	672	**P77**	34	700	16,39	2,46	40
	2200	**P80** [1]	34	700	16,39	2,46	35
	4100	**P801**	34	700	16,39	2,46	35
	2200	**P84** [3]	34	700	16,39	2,46	35
	7423	**P462**	14	700	126,20	4,75	49
	7423	**P464** [3]	14	700	126,20	4,75	49

1) Available as a set, see note on next page.
2) Contact Enerpac for applications where operating pressure is less than 10% of pressure rating.
3) P84 and P464 are for use with double-acting cylinders.

ULTIMA Steel Hand Pumps

Speed Chart

To determine how a specific pump will operate your cylinder, see the Pump-Cylinder Speed Chart in the '**Yellow Pages**'.

Page: 405

P Series



Reservoir Capacity:
672 - 7423 cm³

Flow at Rated Pressure:
2,46 - 4,75 cm³/stroke

Maximum Operating Pressure:
700 bar

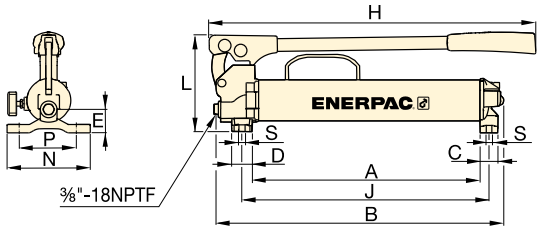

P39, P77

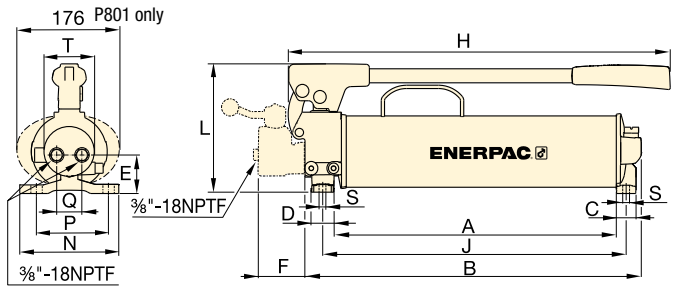

P80, P801, P84

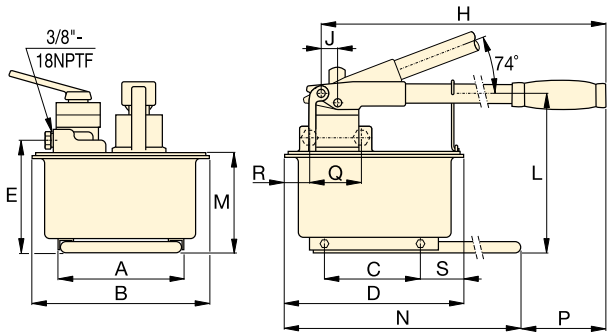

P462, P464



Extra Capacity Hand Pumps

P462 and **P464** feature extra large reservoirs and high first-stage flow rate. These pumps are ideally suited for powering high-capacity cylinders.

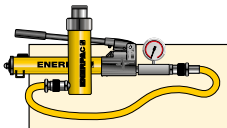

Pump-Cylinder Sets

The **P80** is also available as **complete set** (pump, cylinder, gauge, couplers and hose) for your ordering convenience.

Page: 62

Cylinder Matching Chart

For help in selecting the correct hand pump for your application, please refer to the Cylinder Matching Chart located in the 'Yellow Pages'.

Page: 398

Piston Stroke	Dimensions (mm)																	Model Number
(mm)	A	B	C	D	E	F	H	J	L	M	N	P	Q	R	S	T	(kg)	
25,4	383	480	30	35	37	–	550	416	163	–	140	111	–	–	8,4	–	6,2	**P39**
25,4	391	487	30	35	47	–	550	424	163	–	140	111	–	–	8,4	–	7,1	**P77**
25,4	428	511	30	35	55	–	579	460	195	–	150	121	42	–	8,4	74	10,7	**P80** [1]
25,4	428	511	30	35	55	–	579	460	195	–	150	121	42	–	8,4	74	14,1	**P801**
25,4	428	510	30	35	55	70	579	460	195	–	150	121	38	–	8,4	74	11,8	**P84** [3]
38,1	210	308	163	320	195	–	671	25	270	175	650	92	–	–	80	–	27,7	**P462**
38,1	210	308	163	320	195	–	671	25	270	175	650	92	89	68	80	–	27,7	**P464** [3]

P-Series, Low Pressure Hand Pumps

ENERPAC

▼ Shown from left to right: **P25, P51, P18**



When Less Than 700 bar is All You Need

- **P25 and P50 pump oil in both forward and reverse handle movement improving overall efficiency, ideal when mounting space is restricted**
- **External load-release valve**
- **Internal pressure-relief valve for overload protection**
- **For use with single-acting cylinders and tools**
- **P18 vertical operation requires pump head facing down**
- **P25 and P50 vertical operation requires pump vent side facing down**
- **P51 for horizontal operation only.**



GA45GC Gauge Adaptor

Protect yourself from system overloading by simply ordering one part number for a pre-assembled gauge, adaptor block and coupler.

Page: 142



Hoses

Enerpac offers a complete line of high quality hydraulic hoses. To ensure the integrity of your system, specify only genuine Enerpac hydraulic hoses.

Page: 128

▼ *P18 hand pump used for locking the rotating table for marble polishing.*



Pump Type	Usable Oil Capacity (cm^3)	Model Number *	Pressure Rating (bar)	Oil Displacement per Stroke (cm^3)	Max. Handle Effort (kg)
Single-Speed	360	**P18**	200	2,46	16
	3277	**P25**	175	9,50	27
	3277	**P50**	350	4,75	27
	819	**P51**	200	4,10	27

* For use with single-acting cylinders and tools

Low Pressure Hand Pumps

P Series



Reservoir Capacity:
360 - 3277 cm³

Flow at Rated Pressure:
2,46 - 9,50 cm³/stroke

Maximum Operating Pressure:
175 - 350 bar



MP-Series Multifluid Hand Pumps

Corrosion resistant hand pumps for low pressure filling and high pressure testing applications, suitable for a wide range of fluids.

Page: 82

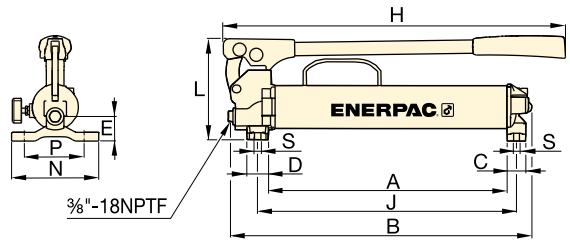

P18

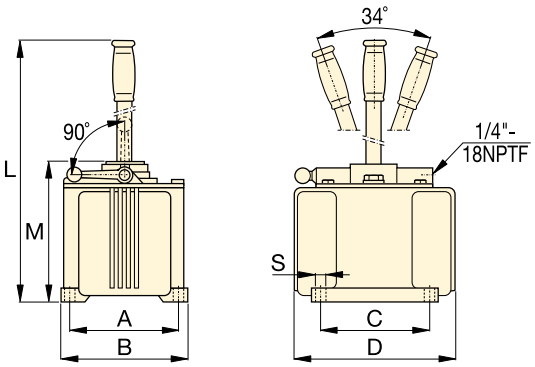

P25, P50

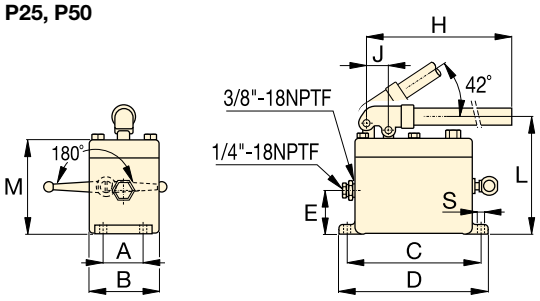

P51

▼ *P51 hand pumps used with RC-series cylinders to keep wooden layers under pressure during lamination of plates.*



Piston Stroke	Dimensions (mm)												Model Number *
(mm)	A	B	C	D	E	H	J	L	M	N	S	(kg)	
25,4	221	316	30	35	37	385	254	163	–	140	8,4	5,0	**P18**
38,1	152	173	152	240	–	–	–	684	200	–	10	16,3	**P25**
38,1	152	173	152	240	–	–	–	684	200	–	10	16,8	**P50**
25,4	52	92	181	200	57	610	29	160	129	–	9	5,4	**P51**

Tel: +45 63 12 83 00 | Email: ps@hymatik.com | www.hymatik.com | Hvidkaervej 27a, DK-5250 Odense SV, Denmark

MP-Series, Multifluid Hand Pumps

ENERPAC

▼ MP110



MP
Series

Flow at Rated Pressure:
1,6 - 20,6 cm³/stroke

Maximum Operating Pressure:
110 - 1000 bar



Optional Reservoir Kit
Includes 10 litres tank with skid frame, top plate with reservoir seal, suction pipe and mounting bolts. Useable oil capacity is 7,4 litres. Order modelnr.: **MP10T**.



Stainless Steel Hand Pump
Also available as stainless steel hand pump, model number **11-400**.

Page: **84**

- **Superior corrosion resistance**
- **Standard Nitrile seals – can be used for a wide range of fluids such as demineralised water, oil/water emulsions, waterglycols, mineral oils**
- **Two speed pumps up to 1000 bar pressure**
- **Buna Nitrile seals can be exchanged with optional EPDM seal for use with Skydrol or brake fluids**
- **Impregnated aluminium anodized pump housing with stainless steel internal pumping components**
- **Externally adjustable pressure relief valve**
- **1/4" NPTF gauge port**
- **For use with single-acting cylinders and tools.**

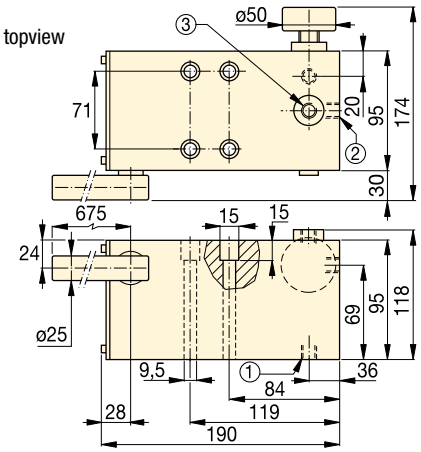

MP110, 350, 700, 1000

① Suction / Tank return port 3/8”-18 NPTF
② Pressure port 3/8”-18 NPTF
③ Gauge port 1/4”-18 NPTF

Pump Type	Usable Oil Capacity * (cm³)	Model Number **	Pressure Rating (bar) 1st stage	Pressure Rating (bar) 2nd stage	Oil Displacement per Stroke (cm³) 1st stage	Oil Displacement per Stroke (cm³) 2nd stage	Max. Handle Effort (kg)	Piston Stroke (mm)	(kg)
Two Speed	*	MP110	35	110	52,6	20,60	45	27,1	6,6
	*	MP350	35	350	52,6	7,15	45	27,1	6,6
	*	MP700	35	700	52,6	2,63	45	27,1	6,6
	*	MP1000	35	1000	52,6	1,60	45	27,1	6,6

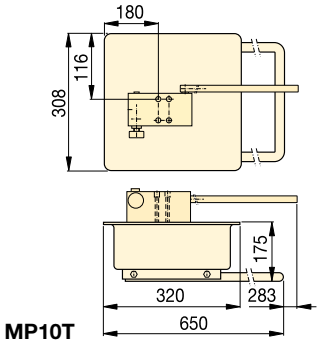

MP10T

* MP-Pump includes 1,5 mm thick gasket for reservoir mounting. MP-Series pumps requires the use of an external reservoir.
** MP-Series pumps are for use with single-acting cylinders and tools.

Lightweight Hydraulic Foot Pump

▼ P392FP



P Series



Reservoir Capacity:
492 cm³

Flow at Rated Pressure:
2,47 cm³/stroke

Maximum Operating Pressure:
700 bar

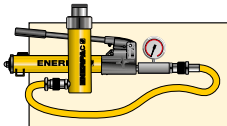

Pump-Cylinder Sets

The **P392FP** is available as **set** (pump, cylinder, gauge, couplers and hose) for your ordering convenience.

Page: 62



Hoses

Enerpac offers a complete line of high quality hydraulic hoses. To ensure the integrity of your system, specify only genuine Enerpac hydraulic hoses.

Page: 128

- **Robust, durable and compact**
  - **Steel frame for maximum stability**
  - **Steel pumping handle**
  - **Aluminium reservoir**
- **Foot pedal lock and lightweight construction for easy carrying**
- **Two-speed operation reduces foot pedal strokes**
- **Large foot-pad release valve for controlling load descent**
- **Internal pressure relief valve for overload protection.**

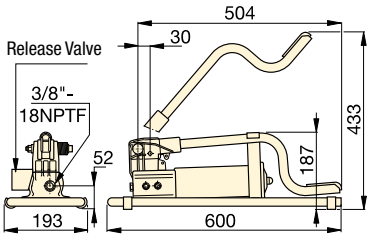

Usable Oil Capacity (cm³)	Model Number	Pressure Rating (bar) 1st stage	Pressure Rating (bar) 2nd stage	Oil Displacement per Stroke (cm³) 1st stage	Oil Displacement per Stroke (cm³) 2nd stage	Max. Handle Effort (kg)	Piston Stroke (mm)	(kg)
492	**P392FP ***	15	700	11,26	2,47	42	25,4	7,0

* Available as set, see note on this page.

▼ *P392FP offers the advantage of hands free operation to handle and control the tool or cylinder.*



P, 11-Series, Ultra-High Pressure Hand Pumps ENERPAC

▼ Shown from left to right: **11-100, P2282**



Ultra-High Pressure up to 2800 bar

- **Two-speed operation on the P2282 allows for faster fill operation, reducing cycle times for many testing applications**
- **303 Stainless steel construction on the 11-100 and 11-400 models enable use with many different fluids, such as distilled water, diesters, silicones, soluble oils and petroleum**
- **Large release knob for improved control of pressure release**
- **Outlet ports are ¾"-16 cone for 2800 bar rating**
- **Ultra-high pressure fittings feature all stainless steel construction except adaptor 41-366 which features nickel plated carbon steel construction.**



2-Way Shut-Off Valve Model Number 72-750

For 2800 bar applications requiring a shut-off valve or gauge snubber. Made of 318 Stainless Steel and utilizing .38 inch cone fittings, it is the perfect selection for use with your ultra-high pressure hand pump.



Test System Gauges

Ideal for monitoring pressure in your hydraulic circuit. Test System Gauges, such as the **T6010L**, are available with cone threads or NPTF threads and a variety of pressure ranges.

Page: 140

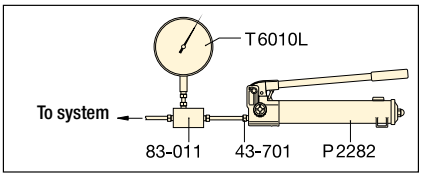

▲ *Typical Test System*

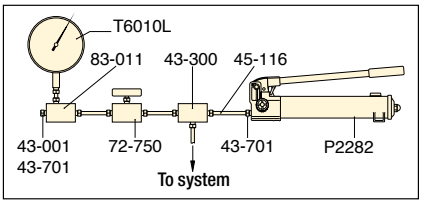

▲ *Test System with Gauge and Snubber*

Cone Seal

Stainless Steel High Pressure fittings seal on a 'cone' surface and do not require pipe sealer. The Gland Nut holds the sleeve and tubing tight against the cone surface to provide a 2800 bar seal.

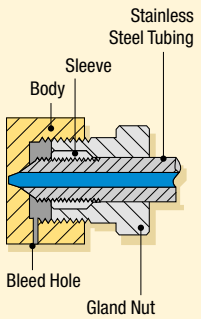

Pump Type	Usable Oil Capacity (cm^3)	Model Number	Pressure Rating * (bar) 1st stage	Pressure Rating * (bar) 2nd stage	Oil Displacement per Stroke (cm^3) 1st stage	Oil Displacement per Stroke (cm^3) 2nd stage	Max. Handle Effort (kg)
Two-Speed	983	**P2282**	13	**2800**	16,22	0,61	48,1
Single-Speed	737	**11-100**	-	**700**	-	2,49	54,4
	737	**11-400**	-	**2800**	-	0,62	54,4

* Contact Enerpac for applications where operating pressure is less than 10% of operating pressure.

Ultra-High Pressure Hand Pumps

▼ Optional Ultra-High Pressure Fittings and Tubings

Description		Connection	Model Nr.
		2800 bar	
Gland Nut Plug		.38" cone	**43-001**
Elbow		.38" cone	**43-200**
Tee		.38" cone	**43-300**
Gauge Tee		.38" cone side/ .25" cone gauge port	**43-301**
Gauge Adaptor		.38" cone side/ .25" cone gauge port	**83-011**
Coupling		.38" cone	**43-400**
Cross		.38" cone	**43-600**
Gland Nut with Sleeve		.38" cone	**43-701**
Gauge Connector		.25" cone	**43-704**
Tubing		100 mm tube, O.D. .38" * 200 mm tube, O.D. .38" * 300 mm tube, O.D. .38" *	**45-116** **45-126** **45-136**
		700 bar only	
Adaptor		.38" F cone to ¼" M NPTF .38" F cone to ⅜" M NPTF	**41-146** **41-166**
Adaptor		.38" F cone to ¼" F NPTF .38" F cone to ⅜" F NPTF	**41-246** **41-266**
Adaptor		.38" M cone to ⅜" F NPTF	**41-366**

Note: .25" cone fittings use 9/16"-18 threads, ⅜" cone fittings use ¾"-16 threads.
* Actual tubing lengths are 19 mm less than nominal size shown. These dimensions make distance between centers of valves and fittings multiples of 100 mm spaces.

P 11 Series



Reservoir Capacity:
737 - 983 cm³

Flow at Rated Pressure:
0,61 - 2,49 cm³/stroke

Maximum Operating Pressure:
700 - 2800 bar

Ultra-High Pressure pumps DO NOT have an internal safety pressure relief valve.

Stainless Steel Construction
Ultra-high Pressure Fittings feature all stainless steel construction except adaptor **41-366**, which features nickel plated carbon steel construction.

11-100
11-400

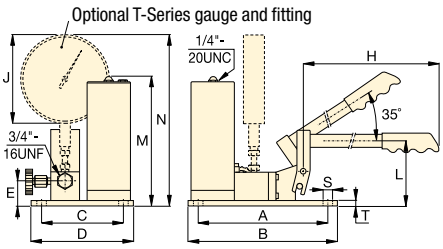

P2282

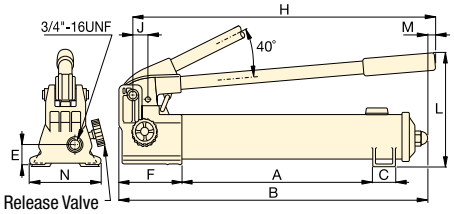

Piston Stroke	Dimensions (mm)														Model Number
(mm)	A	B	C	D	E	F	H	J	L	M	N	S	T	(kg)	
25,4	344	558	35	–	31	133	527	29	228	7	120	–	–	6,4	**P2282**
19,8	240	266	151	177	45	–	635	162	114	237	314	7	9	10,0	**11-100**
19,8	240	266	151	177	45	–	635	162	114	237	314	7	9	10,0	**11-400**

Tel: +45 63 12 83 00 | Email: ps@hymatik.com | www.hymatik.com | Hvidkaervej 27a, DK-5250 Odense SV, Denmark

XC-Series, Cordless Hydraulic Pumps

ENERPAC

▼ XC1201ME



Performance of a Powered Pump

Portability of a Hand Pump

- **Cordless, zero emission pump**
- **Lightweight design with integrated handle and carrying strap for portability**
- **Bladder reservoir prevents contamination and allows pump usage in any position**
- **Powerful 0,37 kW motor and 28 Volt Lithium-Ion battery deliver exceptional speed and superior run time**
- **High-strength fiberglass reinforced composite shroud for superior durability in demanding job site environments**
- **Cordless technology eliminates tripping hazards found in other electric or air powered pumps**
- **Three valve options for single- and double-acting cylinders: 3-way/2-position, 4-way/3-position or Dump & Hold**
- **Also available as torque pumps.**



Interactive Pendant on XC-1302S Models

Available only on **XC1302S** pump models. The interactive pendant allows user to easily toggle from "jog operation" to "dump system pressure" with a push of a button. (Cord length is 3 metres).



28-Volt Battery

The **XC28V** with Lithium-Ion technology for maximum battery performance and superior run time.



Roll Cage

Optional Roll Cage XC-Series pumps. Please order model number **XCRCTK**.



GA45GC Gauge Adaptor Assembly

Protect yourself from system overloading by simply ordering one part number for a pre-assembled gauge, adaptor block and coupler.

Page: 142



◀ *Portable power and simplicity for the toughest jobs.*

Cordless Hydraulic Pumps

XC-Series Cordless Pumps

The XC-Series cordless pump is ideal for jobs that require a combination of portability, speed, and safety. These cordless pumps are perfect for remote locations without access to power, but also indoors where trip hazards, ergonomics or size is a concern.

The XC-Series cordless pump is compatible with all Enerpac hydraulic tools and small to medium sized cylinders.The XC-Series cordless pump is CSA and CE compliant.

Lithium-Ion battery for superior run time:

- 279 cuts of 10 mm reinforcing bar using a WHC750 Cutter
- 112 lifts with a WR5 Spreader
- 44 splits on M27 - 8.8 nuts using a NC3241 Nut Cutter
- 28 times lifting with a RC104 cylinder (10 ton, 100 mm stroke).

Note: Actual number of cycles per charge will vary depending on condition of battery, tool and ambient conditions. Battery life with double-acting tools is approximately 75% of that for comparable, single-acting tools.

XC Series



Reservoir Capacity:
1,0 - 2,0 litres

Flow at Rated Pressure:
0,25 l/min

Maximum Operating Pressure:
700 bar

① Outlet "Advance" Port ⅜"-18 NPTF
② Oil Fill (must use funnel)
③ User Adjustable Relief Valve Access Port
④ Directional Control Valve
⑤ Shoulder Strap Connection Points
⑥ Safety Lock Feature
⑦ On/Off Switch
⑧ Inlet "Retract" Port (double-acting models only)

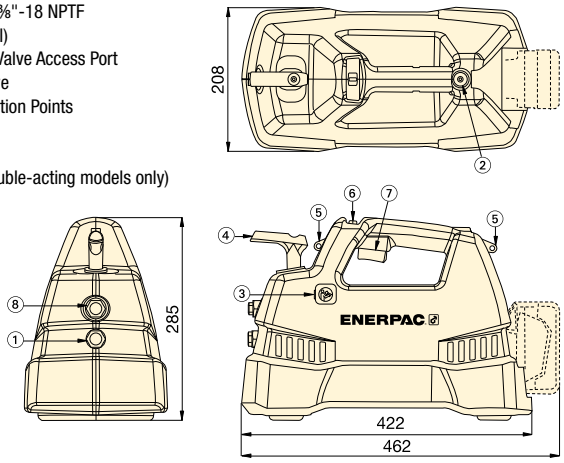

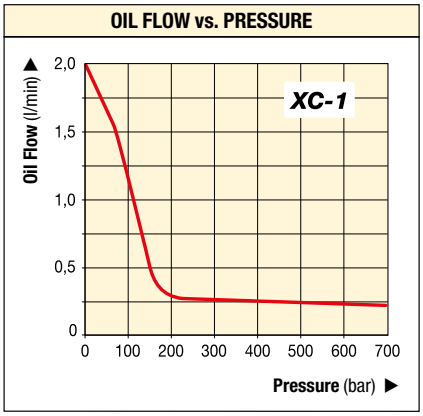

▼ SELECTION CHART

Pump Type (Used with cylinder)	Useable Oil Capacity (litres)	Model Number	Output Flow Rate (l/min) No Load	140 bar	700 bar	Valve Function	Charger Voltage (VAC)	(kg)
Single-Acting	1,0	XC1201MB [1]	2,05	0,49	0,25	3-way, 2-pos.	115	10,0
	2,0	XC1202MB	2,05	0,49	0,25	3-way, 2-pos.	115	11,0
	1,0	XC1201ME [1]	2,05	0,49	0,25	3-way, 2-pos.	230	10,0
	2,0	XC1202ME	2,05	0,49	0,25	3-way, 2-pos.	230	11,0
	1,0	XC1201M [2]	2,05	0,49	0,25	3-way, 2-pos.	–	10,0
	2,0	XC1202M [2]	2,05	0,49	0,25	3-way, 2-pos.	–	11,0
Single-Acting	2,0	XC1302SB	2,05	0,49	0,25	Dump and Hold	115	11,4
	2,0	XC1302SE	2,05	0,49	0,25	Dump and Hold	230	11,4
	2,0	XC1302S [2]	2,05	0,49	0,25	Dump and Hold	–	10,2
Double-Acting	1,0	XC1401MB	2,05	0,49	0,25	4-way, 3-pos.	115	10,0
	2,0	XC1402MB	2,05	0,49	0,25	4-way, 3-pos.	115	11,0
	1,0	XC1401ME	2,05	0,49	0,25	4-way, 3-pos.	230	10,0
	2,0	XC1402ME	2,05	0,49	0,25	4-way, 3-pos.	230	11,0
	1,0	XC1401M [2]	2,05	0,49	0,25	4-way, 3-pos.	–	10,0
	2,0	XC1402M [2]	2,05	0,49	0,25	4-way, 3-pos.	–	11,0

[1] Available as a cylinder pump set, see page 62.
[2] Batteries and charger not included.

▼ *Take the battery pump anywhere without power cords or air hoses.*



ZC-Series, Cordless Hydraulic Pumps

ENERPAC

▼ ZC3308JE



Tough.
Dependable.
Innovative.
CLASS

High-Performance Battery Power

Productivity, Performance, Safety

- High-flow cordless solution saves users time and money by eliminating the need for using a generator and extension cords
- Brushless 1,0 kW motor and 3 stage pump maximizes pump and tool productivity while minimizing heat buildup and downtime
- The Lithium-Ion battery provides superior run time, even under extreme job site conditions
- Convenient 3 m pendant cord for hassle-free operation
- Reduced noise level 80 dBA max.
- Zero emission hydraulic power pack.



Charger *	
ZC115VC	120 V - 60 Hz
ZC230VC	230 V - 50 Hz
Battery **	
ZC82V4NA	82 V, 4 Ah
ZC82V4EUAU	82 V, 4 Ah

* 1-hour quick charger
** NA is North America and EUAU is European and Australia.



Gauges

Minimize the risk of overloading and ensure long, dependable service from your equipment. Refer to the System Components Section for a full range of gauges.

Page: 127



Hoses

Enerpac offers a complete line of high quality hydraulic hoses. To ensure the integrity of your system, specify only Enerpac hydraulic hoses.

Page: 128



◀ *Special Enerpac ZC3-Series Cordless Hydraulic Pump used for rail stressing applications (page 190).*

Cordless Hydraulic Pumps

ZC-Series, Cordless Pumps

The Enerpac ZC-Series pump combines the performance of an electric pump with the convenience and portability of a battery pump. This quiet, cordless solution is ideal for applications where emission and noise are a concern, or when electricity or air is not readily available.

The Lithium-Ion battery provides impressive run times

Power for the pump is supplied by a rechargeable 82V lithium-ion battery.

The lithium-ion battery is capable of providing impressive run times, even under extreme job site conditions.

- 50 times lifting with RC1006 cylinder (95 ton, 168 mm stroke)
- 90 times lifting with RC504 cylinder (50 ton, 101 mm stroke).

Valve Options

- 4-way/3-position manual control valve used with double-acting cylinders
- 3-way/3-position manual control valve used with single-acting cylinders
- 4-way/3-postion manual control valve with locking and power seat functions used in post tensioning concrete applications.

Applications

- High-flow cordless solution for industrial applications
- Foundation repair
- Rail industry
- Post-tensioning concrete.

ZC Series



Reservoir Capacity:
8 litres

Flow at Rated Pressure:
0,52 l/min

Motor Size:
1,0 kW

Maximum Operating Pressure:
700 bar

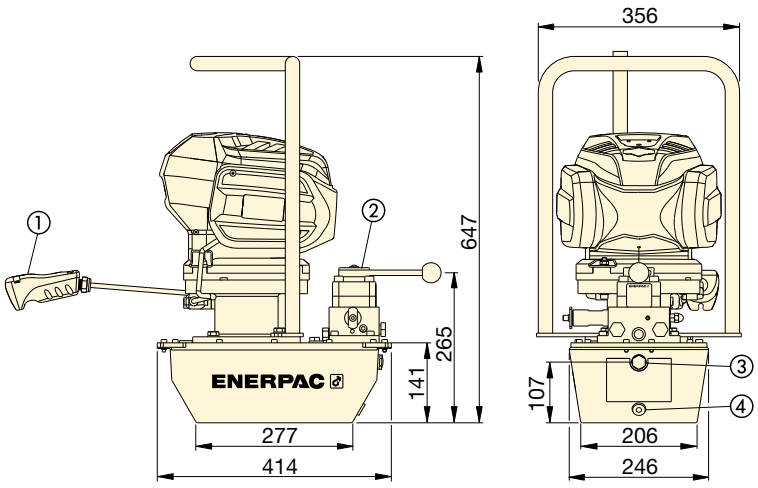

OIL FLOW VERSUS PRESSURE

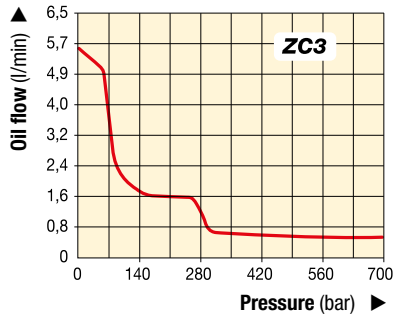

① Motor On/Off Remote Pendant
② VM43-LPS Valve Shown
③ Sight Glass
④ Oil Drain ½" NPTF

Used for Cylinder or Tools	Useable Oil Capacity (litres)	Manual Valve Model Number	Valve Function	Model Number *	Output Flow Rate (l/min) < 70 bar	< 275 bar	< 700 bar	Battery Charger Voltage V - Hz	** (kg)
Single-Acting	6,6	VM33	Advance/Neutral/Retract	**ZC3308JB**	5,0	1,3	0,52	115 - 60	29,7
				ZC3308JE				230 - 50	
Double-Acting	6,6	VM43	Advance/Neutral/Retract	**ZC3408JB**	5,0	1,3	0,52	115 - 60	29,7
				ZC3408JE				230 - 50	
Power Seater Post-Tensioning Tools	6,6	VM43LPS	Advance/Hold/Retract	**ZC3908JB**	5,0	1,3	0,52	115 - 60	33,3
				ZC3908JE				230 - 50	

* All models meet CE safety requirements and all TÜV requirements. Pump includes one charger and battery.
** Weight including oil and battery. Battery weight = 2,6 kg.

PU-Series, Economy Electric Pumps

ENERPAC

▼ PUJ1200E



Heavy on Performance, Light on Weight

- **Lightweight and compact design: 11,8 to 18,6 kg**
- **Large easy-carry handle for maximum portability**
- **Two-speed operation reduces cycle times for improved productivity**
- **230 VAC 50/60-cycle universal motor will operate under poor voltage supply**
- **24 VAC remote motor control, 3 m length for operator safety**
- **Starts under full load**
- **High strength molded shroud, with integral handle, protects motor from contamination and damage**
- **Designed for intermittent duty cycle.**



Gauges

Minimize the risk of overloading and ensure long, dependable service from your equipment. For use with the Economy pump the **G2535L** gauge and **GA3** gauge adaptor are suggested.

For a full range of gauges, please refer to the System Components section.

Page: 138



Hoses

Enerpac offers a complete line of high quality hydraulic hoses. To ensure the integrity of your system, specify only genuine Enerpac hydraulic hoses.

Page: 128

Speed Chart

To determine how a specific pump will operate your cylinder, see the Pump-Cylinder Speed Chart in the 'Yellow Pages'.

Page: 405

▼ *An Economy Pump PUJ1200E is used with a low-height cylinder RCS302 to reposition a Scissor lift to simplify maintenance.*



Pump Type (Used with cylinder)	Usable Oil Capacity (litres)	Model Number *	Pressure Rating (bar) 1st stage	Pressure Rating (bar) 2nd stage
Single-Acting	1,9	PUD1100E	13	700
	3,8	PUD1101E	13	700
	1,9	PUJ1200E	13	700
	3,8	PUJ1201E	13	700
	1,9	PUD1300E	13	700
	3,8	PUD1301E	13	700
Double-Acting	1,9	PUJ1400E	13	700
	3,8	PUJ1401E	13	700

* For 115 volt applications replace 'E' suffix with 'B'.
** Electric dump valve for auto-retract of cylinders.

Economy Electric Pumps

About the Economy Pump

The Economy pump is best suited to power small to medium size cylinders or hydraulic tools. Its lightweight and compact design make it ideal for applications which require easy transport of the pump. The universal motor works well on long extension cords or generator-driven electrical power supplies.

For further application assistance refer to the 'Yellow Pages'.

PUD1100 Series

- Provides advance-retract of single-acting cylinders
- Ideal for punching applications
- For applications not requiring load holding
- 3 m cord with pendant controls motor and valve operation.

PUD1300 Series

- Provides advance-hold-retract of single-acting cylinders
- Ideal for applications requiring load-holding
- For applications requiring solenoid valve operations
- 3 m cord with pendant controls motor and valve operation.

PUJ-Series

- Manual valves provide advance-hold-retract tool operation
- Available with 3- and 4-way valves for single or double-acting cylinders
- 3 m cord with pendant controls the motor operation.

Page: 394

PU Series



Reservoir Capacity:
1,9 - 3,8 litres

Flow at Rated Pressure:
0,32 l/min

Motor Size:
0,37 kW

Maximum Operating Pressure:
700 bar

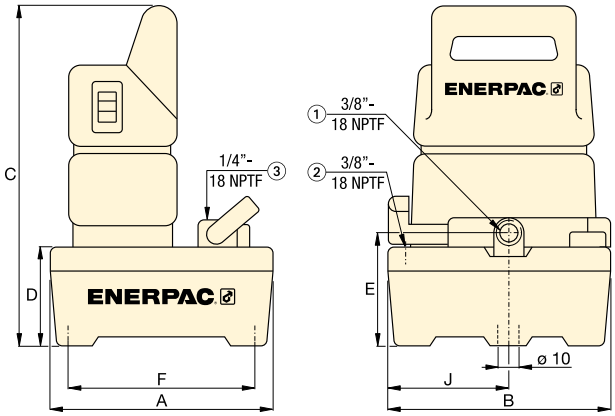

① Oil Outlet Port
② Tank Port
③ Gauge Port (PUJ1200 and PUJ1201 models only)

OIL FLOW VERSUS PRESSURE

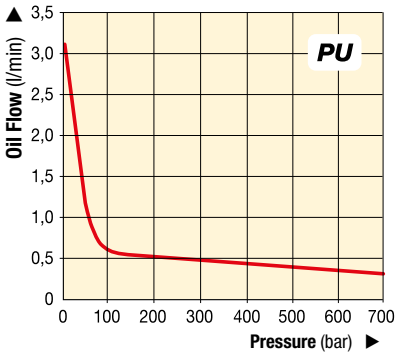

Output Flow Rate (l/min) 1st stage	Output Flow Rate (l/min) 2nd stage	Valve Type	Valve Function	Current Draw (Amps)	Motor Voltage (VAC)	Sound Level (dBA)	Dimensions (mm) A	B	C	D	E	F	J	(kg)	Model Number *
3,31	0,32	Dump**	Advance/Retract	3,2	230	85	244	244	362	101	119	203	133	11,8	PUD1100E
3,31	0,32			3,2	230	85	368	309	373	105	130	323	142	17,2	PUD1101E
3,31	0,32	3/2 manual	Advance/ Hold/Retract	3,2	230	85	244	244	362	101	119	203	133	10,0	PUJ1200E
3,31	0,32			3,2	230	85	368	309	373	105	130	323	142	15,4	PUJ1201E
3,31	0,32	3/2 solenoid	Dump & Hold	3,2	230	85	244	244	362	101	119	203	133	12,0	PUD1300E
3,31	0,32			3,2	230	85	368	309	373	105	130	323	142	17,5	PUD1301E
3,31	0,32	4/3 manual	Advance/ Hold/Retract	3,2	230	85	244	244	362	101	119	203	133	13,2	PUJ1400E
3,31	0,32			3,2	230	85	368	309	373	105	130	323	142	18,6	PUJ1401E

Tel: +45 63 12 83 00 | Email: ps@hymatik.com | www.hymatik.com | Hvidkaervej 27a, DK-5250 Odense SV, Denmark

ZE2-Series, Electric Hydraulic Pumps

ENERPAC

▼ ZE2208ME, ZE2-Series, Electric Pump



Durable, reliable, easy to use

- 0,56 kW induction motor for long life and quiet operation
- 71 to 79 dBA across the pressure range
- 6,8 liter, steel reservoir offers capacity and cool operation for wide range of applications
- IP54 protection
- Heavy duty bearings extend pump life by reducing heat, improving lubrication and reducing wear
- Replaceable piston check valves increase service life of major pump components
- VE32D solenoid dump valve model available
- Pendant and manual control options for ease of use.



Gauges

Minimize the risk of overloading and ensure long, dependable service from your equipment. Refer to the System Components Section for a full range of gauges.

Page: 127



Hoses

Enerpac offers a complete line of high quality hydraulic hoses. To ensure the integrity of your system, specify only Enerpac hydraulic hoses.

Page: 128

Speed Chart

To determine how a specific pump will operate your cylinder, see the Pump-Cylinder Speed Chart in the 'Yellow Pages'.

Page: 405





Electric Hydraulic Pumps

ZE2-Series, Electric Pumps

The ZE2-Series is part of the proven Enerpac ZE-Series and utilizes many of the same design elements as the larger pumps in the family.

The 0,56 kW induction motor enables productive flow rates, long cycle life and quiet operation. Combined with the efficient, robust and easy to service pumping element the ZE2 is ideal for manufacturing and shop environments.

Multiple valve and control options provide the flexibility to match the pump to a wide range of pressing, punching and other operations.

Compare the ZE2 to the other pumps in the ZE-Series and determine the best pump for the application.

ZE2 Series



Reservoir Capacity:
6,8 litres

Flow at Rated Pressure:
0,27 l/min

Motor Size:
0,56 kW

Maximum Operating Pressure:
700 bar

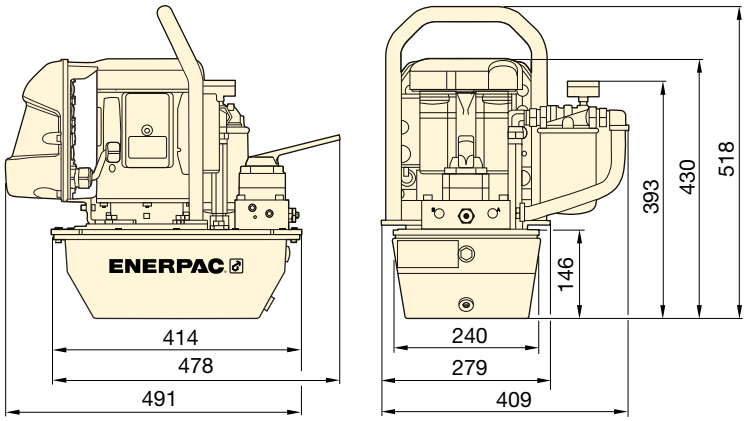

ZE2 with Optional Return Line Filter

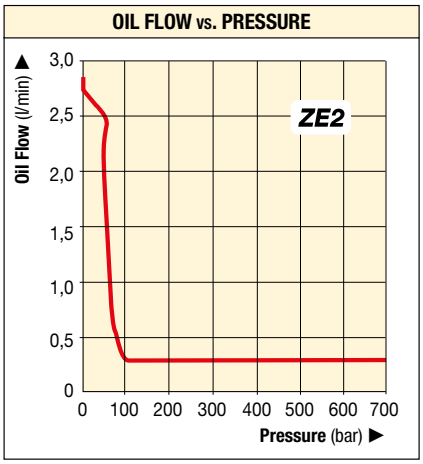

Used with Cylinder *	Valve Hold Function	Useable Oil Capacity (Litres)	Model Number [1] Two-Stage Pump	Oil Flow Rate at 50 Hz (l/min) 7 bar	700 bar	Valve Type	Valve Operation	Motor Voltage (VAC)	Motor Size (kW)	Sound Level (dBA)	(kg)
S/A		6,8	**ZE2108DE (B, I)**	2,7	0,27	VE32D	Solenoid w/ Pendant	230	0,56	79	42,4
S/A		6,8	**ZE2208ME (B, I)** [2]	2,7	0,27	VM32	Manual w/o Pendant	230	0,56	79	37,8
S/A	•	6,8	**ZE2308ME (B, I)** [2]	2,7	0,27	VM33	Manual w/o Pendant	230	0,56	79	38,3
D/A	•	6,8	**ZE2408ME (B, I)** [2]	2,7	0,27	VM43	Manual w/o Pendant	230	0,56	79	38,3
S/A		6,8	**ZE2208PE (B, I)**	2,7	0,27	VM32	Manual w/ Pendant	230	0,56	79	41,3
S/A	•	6,8	**ZE2308PE (B, I)**	2,7	0,27	VM33	Manual w/ Pendant	230	0,56	79	41,7
D/A	•	6,8	**ZE2408PE (B, I)**	2,7	0,27	VM43	Manual w/ Pendant	230	0,56	79	41,7
S/A	•	6,8	**ZE2308EE (B, I)**	2,7	0,27	VE33	Solenoid w/ Pendant	230	0,56	79	49,0
D/A	•	6,8	**ZE2408EE (B, I)**	2,7	0,27	VE43	Solenoid w/ Pendant	230	0,56	79	49,0

* S/A = Single Acting, D/A = Double Acting

[1] "**B**" suffix model numbers shown are 115 VAC, 1-phase, 50/60 Hz, CE compliant
"**I**" indicates pump is available in 208-240V, 1-phase, 50/60 Hz with NEMA 6/15 plug, CE compliant
"**E**" indicates pump is available in 208-240V, 1-phase, 50/60 Hz with European plug, CE compliant

[1] All models can be ordered with the following Factory Installed Accessories/Options:
F = with Return Line Filter, **G** = with 0-1000 bar gauge (ø 63,5 mm), **S** = Single-stage pump unit

[2] Models can be ordered with Pressure Switch (**P**)

E-Series, E-Pulse® Electric Hydraulic Pumps

ENERPAC

▼ EP3204JE-G, E-Pulse® Electric Hydraulic Pump



High productivity through innovative design

Interactive Pendant

Integrated pendant control with a magnet that fits securely into the handle of the pump.

- Operation, programming and diagnostics status provided to operator with yellow, green, and red LED as well as vibration pulses.
- Fault codes warn operators of any issues related to voltage, temperature, button controls, or if professional service is required.



Variable Speed Control *

Speed control with dial adjustment for precise tool or cylinder operation. The adjustable speed range is approximately 25 to 100% of full rated output.



Tie Down Bracket

Enables pump mounting to a work surface: **MBEP-1** optional Tie Down Bracket.



Manifold Mounting Bracket

Ability to mount AM21 and AM41 split-flow hydraulic manifolds: **MMBEP-1** optional Manifold Mounting Bracket.

Performance

- **Two-stage pump with high flow/pressure ratio: 2,13 l/min at 175 bar; 0,52 l/min at 700 bar**
- **Smart controls enable motor to maintain constant power across the pressure range**
- **24VDC power regulator minimizes effects of poor power supply**
- **Six-piston block design provides even flow for smooth operation of cylinder or tool.**

Durability

- **Durable aluminium housing**
- **High-efficiency permanent magnet, direct drive motor enables continuous use and long service life**
- **Built-in thermal protection**
- **IP Rating: IP54 on the pump, IP67 on the pendant.**

Convenience

- **Speed control with dial adjustment for precise operation ***
- **Pendant and cord management system**
- **Integrated pressure gauge with scalereading in bar, MPA and psi**
- **Convenient oil fill port, oil level indicator and automatic breather.**

E-Pulse®, Electric Hydraulic Pumps

E-Pulse® Pumps

The Enerpac E-Pulse® pums drives high productivity through its innovative design.
Smart controls enable the motor to maintain constant power providing higher flow than traditional pumps.

Adjustable speed control * enables precision as required. E-Pulse® pumps are designed for convenience.

Features include a cord management system and integrated pendant control with a magnet that fits securely into the handle of the pump.

The durable aluminum housing is designed to give easy access for serviceability.
E-Pulse is the heart to any hydraulic system, ensuring high performance and providing ultimate convenience.

E Series



Reservoir Capacity:
3,0 litres

Flow at Rated Pressure:
0,52 l/min

Motor Size:
0,63 kW

Maximum Operating Pressure:
700 bar



3/2 Jog, 3/2 Dump, 4/3 Jog
pendant with 3 metres cord



3/2 Dump and Hold
pendant with 3 metres cord

OIL FLOW vs. PRESSURE

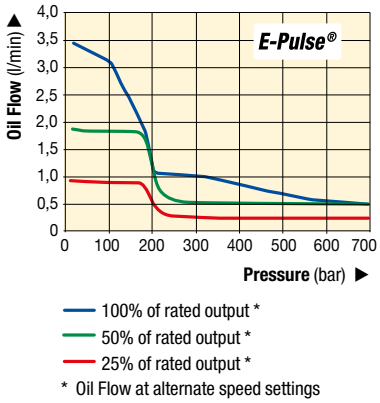

▼ PERFORMANCE CHART

Pump Series/Type	Output Flow Rate (l/min) 1 bar	175 bar	350 bar	700 bar	Motor Voltage (VAC)	Plug Type	Current Draw (Amps)	Sound Level (dBA)
EP3....B-G	3,61	2,13	0,95	0,52	100-120	NEMA 5-15	12	70-85
EP3....I-G					200-250	NEMA 6-15	7	
EP3....E-G					200-250	Schuko CEE 7/7	7	

▼ SELECTION CHART

Used with cylinder or tool	Useable Oil Capacity (litres)	Model Number	Valve Type	Valve Function	Remote Pendant Functions	(kg)
Single-Acting	3,0	EP3104DB-G	3/2 Solenoid	Dump	Advance	18,6
		EP3104DI-G				
		EP3104DE-G				
	3,0	EP3204JB-G *	3/2 Manual	Jog	Motor On/Off	18,4
		EP3204JI-G *				
		EP3204JE-G *				
	3,0	EP3304SB-G *	3/2 Solenoid	Hold and Dump	Advance/Retract	18,7
		EP3304SI-G *				
		EP3304SE-G *				
Double-Acting	3,0	EP3404JB-G *	4/3 Manual	Jog	Motor On/Off	18,6
		EP3404JI-G *				
		EP3404JE-G *				

* The adjustable speed control only applies to all EP3204, EP3304 and EP3404 pump models.

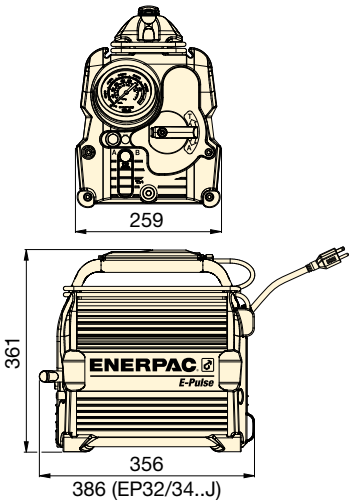

Tel: +45 63 12 83 00 | Email: ps@hymatik.com | www.hymatik.com | Hvidkaervej 27a, DK-5250 Odense SV, Denmark

Z-Class Enerpac Power Pumps

ENERPAC

Introducing the Z-Class power pumps from Enerpac – pumps that run cooler, use less electricity and are easy to service.

Enerpac has used the latest metallurgical, bearing and seal technologies to produce a pump whose features and benefits far surpass the electric pumps that are available today. By reducing the number of moving parts, improving flow dynamics and decreasing friction, Z-Class pumps will stay on the job longer, require less energy to operate and when needed, have lower service costs.



Z-Class power pumps from Enerpac – simply the best pump you will ever use.



Z CLASS
Tough
Dependable
Innovative

Z-Class, An Innovation in Pump Design

Z-Class Pumping Element – The Heart of Your Hydraulic System

Highly efficient design provides increased flow rates, reduced heat generation and a decrease in power consumption. This means improved tool speed and increased service life – which results in higher productivity and lower operating costs.

Heavy-duty bearings extend pump life by reducing friction, reducing surface-loading and lowering bearing stresses.

Pump cavity oil bath extends pump life by reducing heat, improving lubrication and reducing wear.

Self-priming, high-flow 1st stage pump increases pump performance by super-charging the 2nd stage piston pump – improving oil flow in both hot and cold weather operation.

Balanced rotating components reduce vibration creating a smoother running pump – reducing wear, friction and sound levels.

Replaceable piston check-valves increase service life of major pump components.

Ergonomic pendant features sealed switches and operates at 24 V for improved operator safety.

Z-Class factory options & accessories
Extensive list of accessories including heat exchanger, roll cage, skid bar, pressure transducer, return line filter and level and temperature switches, allow complete pump control over a wide range of industrial applications.

Z-Class power pumps for your application
Available in one flow range for universal motor and eight flow ranges for induction motor. Choose from single or two-stage models to provide the optimum cylinder and tool performance for almost any industrial application.

Back-lit LCD on select Z-Class pumps

- pump usage information, hour and cycle counts
- low-voltage warning and recording
- offers self-test and diagnostic capabilities
- information displayed in 6 languages
- pressure read-out (when used with the optional pressure transducer)
- adjustable trigger pressure setting (when used with the optional pressure transducer).



Back-lit LCD available on ZU and ZE-Series Electric Pumps. ▶

Oil Flow Rate at 700 bar (l/min)	Z-Class Pump Series *	Electric Motor Power (kW)	Air Motor-Consumption (l/min)	Gasoline Engine Power (kW)	*Page:*
0,27	**ZE2**	0,56	–	–	**92**
0,52	**ZC3**	1,0	–	–	**88**
0,55	**ZE3**	0,75	–	–	**104**
0,82	**ZE4(T)**	1,12	–	–	**104, 276**
1,00	**ZU4(T)**	1,25	–	–	**98, 272**
1,30	**ZA4(T)**	–	2840	–	**116, 280**
1,60	**ZG5**	–	–	4,8	**118**
1,64	**ZE5(T)**	2,24	–	–	**104, 276**
2,73	**ZE6**	5,60	–	–	**104**
3,30	**ZG6**	–	–	9,7	**118**

* ZC3 battery powered cordless pumps
ZA4T, ZU4T, ZE4T and ZE5T-Series are Torque Wrench Pumps.

ZU-Series Pump Applications

- **Mobile**: when frequent pump transport is required and/or on remote locations
- **Universal motor**: 1-phase, runs well under poor voltage supply, using generator power supply or using long extension cord
- **Duty-cycle**: for intermittent applications
- **Cylinders and tools**: for medium to large size single and double-acting applications and high speed
- **Pump speed**: two stage pump unit.

ZE-Series Pump Applications

- **Stationary**: when pump remains in one location
- **Induction motor**: 1 and 3-phase for high cycle usage
- **Duty-cycle**: for heavy-duty, extended cycle application
- **Cylinders and tools**: for medium to large size single and double-acting applications and high speed
- **Pump speed**: single or two stage pump unit.

ZU4-Series, Portable Electric Pumps

ENERPAC

▼ ZU4308ME (Classic), ZU4420SEH (Pro)



- **High-efficiency two-speed pump design – higher oil flow and bypass pressure**
- **Powerful 1,25 kW universal electric motor provides high power-to-weight ratio and excellent low-voltage operating characteristics**
- **High-strength, moulded composite shroud protects motor and electronics, while providing an ergonomic, non-conductive handle for easy transport.**

Pro-Series models only

- **Back-lit LCD readout provides pressure display and a number of diagnostics and readout capabilities never offered on a portable pump before:**
  - **pump usage information, hour and cycle counts**
  - **self-test, diagnostic and read-out capabilities**
  - **pressure readout and auto-mode pressure settings.**

Z-Class – A Pump For Every Application

Patented Z-Class pump technology provides high by-pass pressures for increased productivity – important in applications using long hose runs and high pressure-drop circuits, like heavy lifting or certain double-acting tools.

Enerpac ZU4-Series Pumps are built to power small to large-sized cylinders or hydraulic tools, or wherever high-speed, intermittent duty, remote hydraulic power is needed.

Classic Electric Pumps

- The Classic has traditional electro-mechanical components (transformers, relays and switches) in place of solid-state electronics.
- The Classic delivers durable, safe and efficient hydraulic power for demanding markets like construction, post-tensioning and foundation repair.

Standard Electric Pumps

- For applications that do not require digital display features of the Premium Pump. Available in all manual or jog versions.

Pro Electric Pumps

- Digital (LCD) display features a built-in hour meter and shows self-diagnostic, cycle-count and low voltage warning information.
- Pressure can also be displayed when the pump is equipped with an optional pressure transducer.



◀ *Designed to be tough, the ZU4-Series with steel reservoirs will take the abuse of today's construction sites.*

Assisted Return Pumps with Venturi Valve Technology

To improve productivity and plunger retraction, Enerpac offers valve configurations designed to accelerate your cylinder retraction speeds, ZU4-Series pumps feature **Venturi Valve Technology** to facilitate the faster return of single-acting gravity return cylinders. See valve type in ordering matrix and details in section Directional Control Valves.

Page: 100

ZU4-Series, Specifications and Dimensions

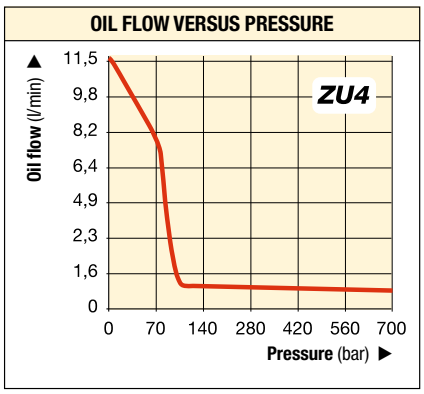

ZU4 Series



Reservoir Capacity:
4,6 - 39 litres

Flow at Rated Pressure:
1,0 l/min

Motor Size:
1,25 kW

Maximum Operating Pressure:
700 bar

ZU4-SERIES PERFORMANCE CHART

Motor Size	Output Flow Rate at 50 Hz (l/min)				Motor Electrical Specifications	Sound Level	Relief Valve Adjustment Range
(kW)	7 bar	50 bar	350 bar	700 bar	(Volts-Ph-Hz)	(dBA)	(bar)
1,25	11,5	8,8	1,2	1,0	115-1-50/60 230-1-50/60	85-90	140-700

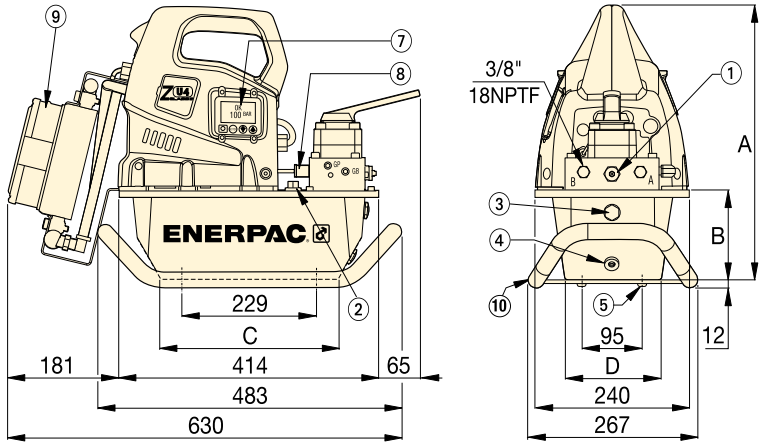

ZU4-Series with 4,6 and 6,8 litres reservoirs

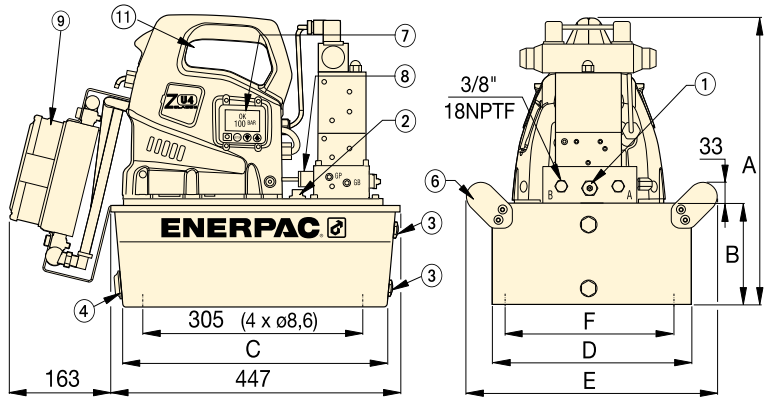

ZU4-Series with 19,8 and 39 litres reservoirs
(left view shown without side handle)

⅜"-18 NPTF Advance and Retract Ports

① User adjustable relief valve
② Oil fill port SAE #10 ⅞"-14 UNF-2B
③ Oil level sight gauge
④ Oil drain ½" NPTF
⑤ M8, 6 mm deep
⑥ Handles on all 19,8 and 39 litres reservoirs.

Options

⑦ Back-lit LCD Electric
⑧ Pressure transducer
⑨ Heat Exchanger
⑩ Skid Bar. Fits 4,6 and 6,8 litres reservoirs
⑪ Handle guard installed on all 19,8 and 39 litres reservoirs
⑫ Reservoir handles (not shown) included on all 19,8 and 39 litres reservoirs

Pump Dimensions (mm)							
Reservoir Capacity (litres)	A	B	C	D	E	F
4,6	424	142	279	152	-	-
6,8	424	142	279	206	-	-
19,8	465	180	413	422	500	396
39	551	269	399	503	576	480

Tel: +45 63 12 83 00 | Email: ps@hymatik.com | www.hymatik.com | Hvidkaervej 27a, DK-5250 Odense SV, Denmark

ZU4-Series, Ordering Guide

ENERPAC

▼ STEP 1: Select a pump from the Pump Ordering Matrix

The functionality of the pump can be determined by the model number. Utilize the guide below to select the best pump for the application from the pump ordering matrix.

Z	U	4	4	08	J	E	-	H	R
1 Product Type	2 Motor Type	3 Flow Group	4 Valve Type	5 Reservoir Capacity	6 Valve Operation	7 Voltage		8 Factory Installed Accessories	

1 Product Type
Z = Pump Series

2 Motor Type
U = Universal electric motor

3 Flow Group
4 = 1,0 l/min @ 700 bar

4 Valve Type
1 = Dump (**VE32D**)
2 = 3 way/2 position manual or electric (**VM32** or **VE32**)
3 = 3 way/3 position manual or electric (**VM33** or **VE33**)
4 = 4 way/3 position manual or electric (**VM43** or **VE43**)
6 = 3 way/3 position locking manual with pilot operated check valve (**VM33L**)
7 = 3 way/2 position manual (**VM22**)
8 = 4 way/3 position locking manual with pilot operated check valve (**VM43L**)
9 = 4 way/3 position manual w/power seating (**VM43LPS**)
10 = 3 way/3 position manual Venturi valve (**VM33VAC**)
11 = 3 way/3 position electric Venturi valve (**VE33VAC**)

5 Reservoir Capacity
04 = 4,6 litres
08 = 6,8 litres
20 = 19,8 litres
40 = 39,0 litres

6 Valve Operation
D = Dump solenoid valve with pendant and LCD Electric
J = Jog manual valve with pendant (without LCD)
L = Manual valve with LCD Electric (without pendant)
M = Manual valve (without pendant and LCD)
P = Manual valve with pendant (without LCD)
S = Solenoid valve with pendant and LCD Electric

7 Voltage
B = 115V, 1 ph, 50/60Hz
E = 208-240V, 1 ph, 50/60 Hz (with European plug and CE EMC compliant)
I = 208-240V, 1 ph, 50/60 Hz (with NEMA 6-15 plug)

▼ STEP 2: Factory Installed Accessories

Select factory installed accessories and add to the pump model number after the hyphen. The example above shows that a **Heat Exchanger (H)** and **Roll Cage (R)** have been added to the pump.

8 Factory installed accessories include the following:

F = Return Line Filter
G = Pressure Gauge [1)]
H = Heat Exchanger
K = Skid Bar
L = Level/Temperature Switch [2)]
N = Lifting Eyes (no reservoir handles)
R = Roll Cage
T = Pressure Transducer
U = Foot Switch

[1)+2)]: See the notes about Pressure Gauge and Level/Temperature Switch in right column.

Two Speed Pumps

Recommended for applications where cylinder plunger must advance rapidly to load contact, and applications where greater oil capacities are required, such as multiple cylinder hook-ups.

Speed Chart

To determine how a specific pump will operate your cylinder, see the Pump-Cylinder Speed Chart in the 'Yellow Pages'.

Page: 405



Assisted Return Pumps with Venturi Valve Technology

To improve productivity and plunger retraction, Enerpac offers valve configurations designed to accelerate your cylinder retraction speeds, ZU4 and ZE-Series pumps feature **Venturi Valve Technology** to facilitate the faster return of single-acting gravity and spring return cylinders. See valve type in ordering matrix and details in section Directional Control Valves.

Page: 122



Spring Centred Valve Kits

VM and VC-Series manual 3-position valves can be easily converted into spring centred valves. With these retro-fit kits the handle will automatically move into the neutral valve position when released.

Page: 123

Pressure Gauge, Level/Temperature Switch

[1)] Pressure Gauge (**G**) not available on pump models with pressure transducer (**T**). The pressure transducer provides digital pressure read-out on LCD-display.

[2)] Level/Temperature Switch (**L**) requires electric package. Not available on reservoirs 04 and 08.

ZU4-Series, Pump Ordering Matrix

ZU4-Series



Reservoir Capacity:
4,6 - 39 litres

Flow at Rated Pressure:
1,0 l/min

Motor Size:
1,25 kW

Maximum Operating Pressure:
700 bar

▼ ZU-PRO SERIES PUMP MODELS WITH SOLENOID VALVE, PENDANT AND LCD ELECTRIC

	S/A or D/A [1]	Hold	Valve Type [2]	Reservoir Capacity (litres)	(kg)	Model Number 230 VAC, 1 phase, 50/60 Hz [3]
With Dump Valve • Ideal for punching, crimping and cutting • For use when load-holding is not required.	S/A		VE32D	4,6	29	**ZU4104DE (B, I)**
	S/A		VE32D	6,8	31	**ZU4108DE (B, I)**
	S/A		VE32D	19,8	51	**ZU4120DE (B, I)**
	–		–	–	–	**–**
	–		–	–	–	**–**
With Solenoid Valves • Ideal for lifting applications and where remote control is required • Motor runs continuously on pumps with VE33 and VE43 valves. • With VE32 valve, motor only runs during the advance function, while holding and retracting, the motor is off • Venturi Valve technology (VE33VAC) for faster retract of single-acting cylinders.	S/A	●	VE32	4,6	29	**ZU4204SE (B, I)**
	S/A	●	VE32	6,8	31	**ZU4208SE (B, I)**
	S/A	●	VE32	19,8	51	**ZU4220SE (B, I)**
	S/A	●	VE33	6,8	37	**ZU4308SE (B, I)**
	S/A	●	VE33	19,8	57	**ZU4320SE (B, I)**
	S/A	●	VE33	39,0	79	**ZU4340SE (B, I)**
	S/A	●	VE33VAC	6,8	34	**ZU41108SE (B)**
	S/A	●	VE33VAC	19,8	53	**ZU41120SE (B)**
	S/A	●	VE33VAC	39,0	76	**ZU41140SE (B)**
	D/A	●	VE43	6,8	37	**ZU4408SE (B, I)**
	D/A	●	VE43	19,8	56	**ZU4420SE (B, I)**
	D/A	●	VE43	39,0	79	**ZU4440SE (B, I)**

▼ ZU-SERIES PUMP MODELS WITH MANUAL VALVES

	S/A or D/A [1]	Hold	Valve Type [2]	Reservoir Capacity (litres)	(kg) [5]	Model Number 230 VAC, 1 phase, 50/60 Hz [3]		
						Manual Only	Standard Electric with Pendant	Classic Electric with Pendant [4]
With Manual Valves • Ideal choice for most applications • Manual valve control, for single-acting or double-acting applications • Motor control on shroud • Venturi Valve technology (VM33VAC) for faster retract of single acting cylinders • Pendant models ideal for light production and lifting applications • Locking valves provide hydraulic locking of cylinder until valve is shifted into retract position.	S/A		VM22	4,6	27	**ZU4704ME (B, I)**	**–**	**ZU4704PE (B, I)**
	S/A		VM22	6,8	29	**ZU4708ME (B, I)**	**–**	**ZU4708PE (B, I)**
	S/A		VM22	19,8	49	**ZU4720ME (B, I)**	**–**	**ZU4720PE (B, I)**
	S/A		VM32	4,6	25	**ZU4204ME (B, I)**	**ZU4204JE (B, I)**	**–**
	S/A		VM32	6,8	28	**ZU4208ME (B, I)**	**ZU4208JE (B, I)**	**–**
	S/A		VM32	19,8	47	**ZU4220ME (B, I)**	**ZU4220JE (B, I)**	**–**
	S/A		VM32	39,0	70	**ZU4240ME (B, I)**	**ZU4240JE (B, I)**	**–**
	S/A	●	VM33	4,6	25	**ZU4304ME (B, I)**	**–**	**–**
	S/A	●	VM33	6,8	28	**ZU4308ME (B, I)**	**ZU4308JE (B, I)**	**ZU4308PE (B)**
	S/A	●	VM33	19,8	48	**ZU4320ME (B, I)**	**ZU4320JE (B, I)**	**ZU4320PE (B)**
	S/A	●	VM33	39,0	71	**ZU4340ME (B, I)**	**ZU4340JE (B, I)**	**ZU4340PE (B)**
	S/A	●	VM33VAC	6,8	29	**ZU41008ME (B)**	**ZU41008JE (B)**	**–**
	S/A	●	VM33VAC	19,8	48	**ZU41020ME (B)**	**ZU41020JE (B)**	**–**
	S/A	●	VM33L	6,8	30	**ZU4608ME (B)**	**ZU4608JE (B)**	**–**
	S/A	●	VM33L	19,8	49	**ZU4620ME (B)**	**ZU4620JE (B)**	**–**
	D/A	●	VM43	6,8	29	**ZU4408ME (B, I)**	**ZU4408JE (B, I)**	**ZU4408PE (B)**
	D/A	●	VM43	19,8	48	**ZU4420ME (B, I)**	**ZU4420JE (B, I)**	**ZU4420PE (B)**
	D/A	●	VM43	39,0	71	**ZU4440ME (B, I)**	**ZU4440JE (B, I)**	**ZU4440PE (B)**
	D/A	●	VM43L	4,6	30	**ZU4808ME (B)**	**ZU4808JE (B)**	**–**
	D/A	●	VM43L	19,8	50	**ZU4820ME (B)**	**ZU4820JE (B)**	**–**

[1] S/A or D/A = For use with Single-Acting or Double-Acting cylinders and tools. [2] Additional details can be found in the Directional Control Valve section
[3] "**B**" indicates pump is available in 115V, 1-phase, 50/60 Hz. Model number order example: **ZU4208MB**.
"**I**" indicates pump is available in 208-240V, 1-phase, 50/60 Hz with NEMA 6-15 plug. Model number order example: **ZU4208MI**.
[4] Classic Electric Pump has traditional electro-mechanical components (transformers, relays, switches) in place of solid-state electronics.
[5] Weights given for pump with manual valve. For Standard Electric with pendant add 0,5 kg and Classic Electric with pendant add 1,5 kg.
NOTE: Valve operation "**L**" available on pumps with manual valve. Substitute "**M**" for "**L**" valve operation. Example: **ZU4608LE**.

ZU4-Series, Accessories

ENERPAC



Roll Cage (R)

- **Protects and stabilizes the pump.**

Popular Pump Models with Factory Installed Roll Cage	
ZU4108DE-R (B, I)	ZU4308ME-R (B, I)
ZU4208JE-R (B, I)	ZU4320ME-R (B, I)
ZU4220JE-R (B, I)	ZU4408ME-R (B, I)
ZU4208SE-R (B, I)	ZU4420ME-R (B, I)
ZU4308JE-R (B, I)	ZU4408JE-R (B, I)
ZU4320JE-R (B, I)	ZU4420JE-R (B, I)
ZU4308SE-R (B, I)	ZU4408SE-R (B, I)
ZU4320SE-R (B, I)	ZU4420SE-R (B, I)

Accessory Kit Model Nr.	Fits on Reservoir
	
ZRC-04	4,6 and 6,8 litres [1]
ZRC-04H	4,6 and 6,8 litres [2]
ZRB-20	19,8 litres
ZRB-40	39 litres

[1] Without heat exchanger
[2] With heat exchanger



Foot Switch (U)

- **3 metres cord, hands-free control.**

Popular Pump Models with Factory Installed Foot Switch	
ZU4108DE-U (B, I)	
ZU4208SE-U (B, I)	
ZU4220SE-U (B, I)	
ZU4320SE-U (B, I)	
ZU4408SE-U (B, I)	
ZU4420SE-U (B, I)	

Accessory Kit Model Nr.	Can be used on ZU4 Pumps with solenoid dump and 3-position valves, LCD electric
	
ZCF-2	Solenoid VE-Series valves

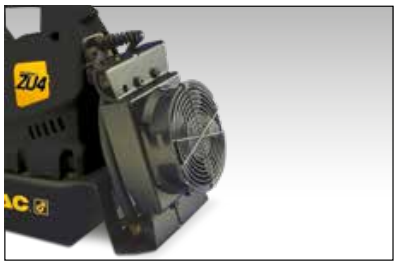

Heat Exchanger (H)

- **Removes heat from bypass oil**
- **Increases oil life, reduces wear on hydraulic components.**

Popular Pump Models with Factory Installed Heat Exchanger	
ZU4108DE-H (B, I)	
ZU4208SE-H (B, I)	
ZU4308SE-H (B, I)	
ZU4408SE-H (B, I)	
ZU4420SE-H (B, I)	

Accessory Kit Model Nr.	Can be used on
	
ZHE-U115	115 V pumps
ZHE-U230	230V pumps



Pressure Transducer (T)

- **More durable than analog gauges**
- **Displays psi, bar or Mpa**
- **Motor shutoff or shift to neutral at set pressure.**

Popular Pump Models with Factory Installed Pressure Transducer, Requires LCD Electric Pump	
ZU4108DE-T (B, I)	
ZU4208SE-T (B, I)	
ZU4308SE-T (B, I)	
ZU4408SE-T (B, I)	
ZU4420SE-T (B, I)	

Accessory Kit Model Nr.	Adjustable Pressure Range (bar)	Switch-Point Repeat-ability (%)	Dead-band (bar)
			
ZPT-U4	3,5 - 700	± 0,5	3,5

Note: The pressure transducer provides digital pressure read-out on LCD-display.

ZU4-Series, Accessories

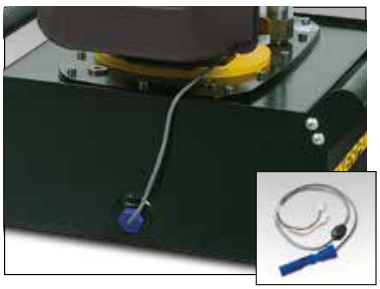

Level/Temperature Switch (L) [1]

- **Shuts off pump when high operating temperature or low oil is reached**
- **Plugs directly into pump electrical enclosure**
- **Easy installation to pump reservoir**
- **Requires LCD electric.**

Accessory Kit Model Nr.	Operating Temperature (°C)	Maximum Pressure (bar)	(kg)
ZLS-U4	5 - 110	10	0,1

[1] Level/Temperature switch (L) not available on 4,6 or 6,8 litres reservoir.



Return Line Filter (F)

- **25 micron filter removes contaminants from return oil flow**
- **Internal by-pass valve prevents damage if filter is dirty**
- **With maintenance indicator**
- **Replaceable filter element PF25.**

Accessory Kit Model Nr.	Max. Pressure (bar)	Max. Oil Flow (l/min)	By-Pass Setting (bar)
ZPF	14	45	1,7



Skidbar (K)

- **Provides easy two-hand lift**
- **Provides greater pump stability on soft or uneven surfaces**
- **Cannot be used in combination with roll cage.**

Accessory Kit Model Nr.	Fits on Reservoir	(kg)
SBZ-4	4,6 and 6,8 litres [2]	2,2
SBZ-4L	4,6 and 6,8 litres [3]	3,2

[2] Without heat exchanger
[3] With heat exchanger



Pressure Gauge (G)

- **Minimize risk of overloading to ensure long life of equipment**
- **ø 63 mm face diameter, glycerin filled**
- **Dual scale in bar and psi.**

Accessory Kit Model Nr.	Description
G2536L	0 - 1000 bar, 0 - 15.000 psi

Note: Pressure Gauge not available on pump models with pressure transducer. The pressure transducer provides digital pressure read-out on LCD-display.

ZU4 Series



Reservoir Capacity:
4,6 - 39 litres

Flow at Rated Pressure:
1,0 l/min

Motor Size:
1,25 kW

Maximum Operating Pressure:
700 bar

Heat Exchanger

Stabilizes oil temperature at a maximum of 54 °C at 21 °C ambient temperature.

Do not exceed maximum oil flow and pressure ratings. Heat exchanger is not suitable for water-glycol or water based fluids.

Thermal Transfer * (Btu/h)	Maximum Pressure (bar)	Maximum Oil Flow (l/min)	Voltage (VDC)
900	20,7	26,5	12

* At 1,9 l/min at 21 °C ambient temperature.



Hoses

Enerpac offers a complete line of high-quality hydraulic hoses. To ensure the integrity of your system, specify only Enerpac hydraulic hoses.

Page: 128

Tel: +45 63 12 83 00 | Email: ps@hymatik.com | www.hymatik.com | Hvidkaervej 27a, DK-5250 Odense SV, Denmark

ZE-Series, Electric Pumps

ENERPAC

▼ Shown from left to right: **ZE3304ME-K, ZE4110DE-FHR**



- **High-efficiency pump design – higher oil flow and by-pass pressure**
- **High-strength, moulded electrical box protects electronics, power supplies and LCD readout and stands up to harsh industrial environments**
- **IP54 protection and isolation class**
- **Back-lit LCD provides self test, diagnostic and read-out capabilities never before offered on an industrial pump (included on pump with electric valves, optional on other models)**
- **Totally enclosed, fan-cooled industrial electric motors for extended life**
- **User adjustable relief valve built-in on manual and solenoid valves. Oil ports on valves are 3/8" NPTF**
- **Steel fan guard on all electric motors**
- **Full sight oil level glass on 9,8, 19,8 and 39 litres reservoirs, oil level indicators on 4,6 and 6,8 litres reservoirs.**
- **40 micron filter breather with splash guard**
- **Durable steel reservoirs.**



◀ *Rail wheel pulling using RACH aluminium cylinder powered by ZE-Series pump.*

ZE
Series

Reservoir Capacity:
4,6 - 39 litres

Flow at Rated Pressure:
0,55 - 2,73 l/min

Motor Size:
0,75 - 5,60 kW

Maximum Operating Pressure:
700 bar

Z Tough
Dependable
Innovative
CLASS

Speed Chart

To determine how a specific pump will operate your cylinder, see the Pump-Cylinder Speed Chart in the 'Yellow Pages'.

Page: 405



Locking Valves

For applications requiring positive load holding, VM-Series valves (except VM32) are available with a pilot- operated check valve **VM33L** and **VM43L**. This provides hydraulic locking of the load until the valve is shifted into the retract position.



Assisted Return Pumps

To improve productivity and plunger retraction, Enerpac offers valve configurations designed to accelerate your cylinder retraction speeds, ZU4 and ZE-Series pumps feature **Venturi Valve Technology** to facilitate the faster return of single-acting gravity and spring return cylinders. See valve type in ordering matrix and details in section Directional Control Valves.

Page: 122

ZE-Series, Specifications & Dimensions

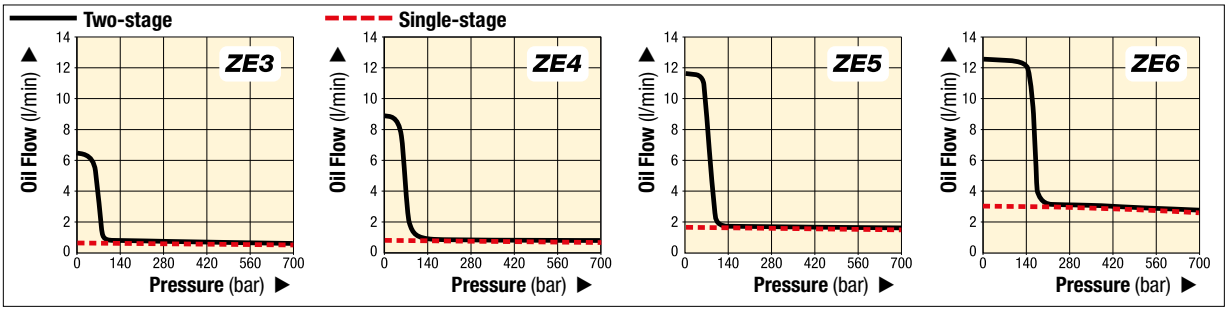

▼ **ZE-SERIES PERFORMANCE CHART**

Pump Series	Output Flow Rate at 50 Hz * (l/min) low pressure at 7 bar	low pressure at 50 bar	high pressure at 350 bar	high pressure **at 700 bar**	Pump Unit	Available Reservoir Sizes (litres)	Motor Size (kW)	Relief Valve Adjustment Range (bar)	Sound Level (dBA)
ZE3	0,59	0,59	0,57	**0,55**	Single-stage	4,6 - 6,8 - 9,8 19,8 - 39	0,75	70-700	75
	6,15	5,26	0,57	**0,55**	Two-stage				
ZE4	0,87	0,87	0,84	**0,82**	Single-stage	4,6 - 6,8 - 9,8 19,8 - 39	1,12	70-700	75
	8,88	8,20	0,84	**0,82**	Two-stage				
ZE5	1,75	1,72	1,68	**1,64**	Single-stage	9,8 - 19,8 - 39	2,24	70-700	75
	11,61	11,27	1,68	**1,64**	Two-stage				
ZE6	3,00	2,94	2,86	**2,73**	Single-stage	9,8 - 19,8 - 39	5,60	70-700	80
	12,29	12,15	2,86	**2,73**	Two-stage				

* Oil flow will be approximately 6/5 of these values at 60 Hz.

Single or Two-Stage

Choose single-stage pumps for applications that require constant flow regardless of pressure such as testing or clamping.
Two-stage pumps have an increased output flow at low pressure to allow fast movement towards the load, for reduced cycle times and increased productivity.

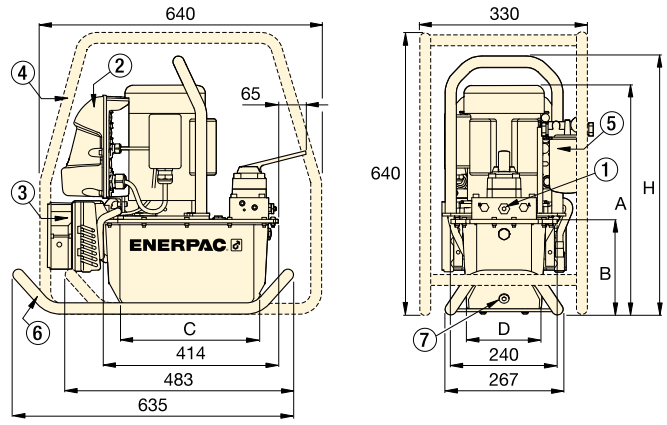

ZE-Series Pumps with 4,6 - 6,8 litres reservoir

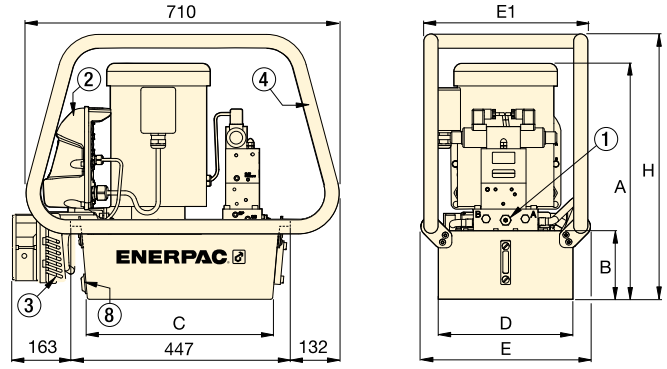

ZE-Series Pumps with 9,8 - 19,8 - 39 litres reservoir

① User adjustable relief valve on all manual and solenoid valves. ⅜" NPTF on A and B ports; ¼" NPTF on auxiliary ports.
② Electric Box
③ Heat Exchanger
④ Roll Cage
⑤ Return Line Filter
⑥ Skid Bar
⑦ Magnetic Oil Drain
⑧ Oil Drain / Oil Level & Temperature Switch

Reservoir Size (litres)	ZE-Series Pump Dimensions (mm) A	B	C	D	E	E1	H
4,6	457	143	279	152	–	–	513
6,8	457	143	279	206	–	–	513
9,8	533	158	419	305	384	371	600
19,8	558	180	419	422	501	488	625
39	648	270	399	505	576	572	715

Tel: +45 63 12 83 00 | Email: ps@hymatik.com | www.hymatik.com | Hvidkaervej 27a, DK-5250 Odense SV, Denmark

ZE-Series, Pump Ordering Guide

ENERPAC

▼ STEP 1: Select a pump from the Pump Ordering Matrix

The functionality of the pump can be determined by the model number. Utilize the guide below to select the best pump for the application from the pump ordering matrix.

Z	E	4	4	20	M	E	-	F	H
1 Product Type	2 Motor Type	3 Flow Group	4 Valve Type	5 Reservoir Capacity	6 Valve Operation	7 Voltage		8 Factory Installed Accessories	

1 Product Type
Z = Pump Class

2 Prime Mover
E = Induction electric motor

3 Flow Group
3 = 0,55 l/min @ 700 bar
4 = 0,82 l/min @ 700 bar
5 [1] = 1,64 l/min @ 700 bar
6 [1] = 2,73 l/min @ 700 bar

4 Valve Type
0 = No valve, with cover plate
1 = 3/2 Dump valve **VE32D**
2 = 3/2 manual **VM32**
3 = 3/3 manual **VM33** or electric **VE33**
4 = 4/3 manual **VM43** or electric **VE43**
6 = 3/3 manual locking valve **VM33L** with pilot operated check
8 = 4/3 manual locking valve **VM43L** with pilot operated check
10 [6] = 3 way/3 position manual **Venturi** valve **VM33VAC**
11 [6] = 3 way/3 position electric **Venturi** valve **VE33VAC**

5 Reservoir Capacity
04 = 4,6 litres (not available on ZE5, ZE6)
08 = 6,8 litres (not available on ZE5, ZE6)
10 = 9,8 litres
20 = 19,8 litres
40 = 39,0 litres

6 Valve Operation
D = Dump solenoid valve with pendant and LCD
L = Manual valve with LCD Electric (without pendant)
M = Manual valve, without pendant or LCD
N = No valve, no electric box
S = Solenoid valve, with pendant and LCD

7 Motor Voltage
Single phase motor (not on ZE5, ZE6)
B [1] = 115V, 1 ph, 50-60 Hz
E = 208-240V, 1 ph, 50-60 Hz with European SCHUKO Plug
I = 208-240V, 1 ph, 50-60 Hz with USA Nema 6-15 plug

Three phase motor [3]
G = 208-240V, 3 ph, 50-60 Hz
J = 460-480V, 3 ph, 50-60 Hz
W = 380-415V, 3 ph, 50-60 Hz

▼ STEP 2: Factory Installed Accessories

Select factory installed accessories and add to the pump model number after the hyphen. The example above shows that a **Return Line Filter (F)** and **Heat Exchanger (H)** have been added to the pump.

8 Factory installed accessories include the following:
F = Return Line Filter
G = Pressure Gauge [4]
H = Heat exchanger [2]
K = Skid Bar
L = Level/Temperature switch [2]
N = Lifting Eyes (no reservoir handles) [7]
P = Pressure Switch [2]
R = Roll Cage
S = Single stage pump unit [5]
T = Pressure transducer [2] [4]
U = Foot switch [2]

1) 115-volt pumps are supplied with 15-Amp plug for intermittent use. 20-Amp circuit recommended for frequent full pressure use.
2) These accessories (H, L, P and T) require LCD electrical package. Level/Temperature switch (L) not available on 4,6 or 6,8 litres reservoir. Pressure switch option (P) only available on manual valves without locking valve. The LCD electrical package can accept either a pressure switch or pressure transducer, but not both.
3) Pump with 3-ph motors without Electric Box shipped without cord, motor starter or overload protection.
4) Pressure gauge (G) not available on pump models with pressure transducer. Pressure transducer provides digital pressure readout on LCD display.
5) Not available on pumps with Venturi Valve Type 10 or 11.
6) Not available on ZE3-Series pumps.
7) Lifting eyes (N) not available on reservoir capacities 04 or 08.

▼ ZE-SERIES PUMP MODELS

No Valve, with coverplate, no electric box	
Manual Valve without Electric Box or LCD • Ideal choice for most applications • Manual valve control, for both single-acting or double-acting applications • Venturi Valve Technology (VM33VAC) for faster retract of single-acting cylinders • Manual motor control • On/off switch on 1-phase electric motor.	
Solenoid Dump Valve, Electric Box and LCD • Ideal for punching, crimping and cutting • For use when load holding is not required • Push-button control pendant with 3 m. cord controls the valve and motor.	
Solenoid 3-position Valve with Electric Box • Ideal for production and lifting applications • All valves are 3-position for Advance-Hold-Retract • Venturi Valve Technology (VE33VAC) for faster retract of single-acting cylinders • Push-button control pendant with 3 m. cord controls the valve and motor.	

ZE-Series, Pump Ordering Matrix

S/A or D/A [1]	Hold 	Valve Type [2]	Reservoir Capacity (litres)	ZE3-Series (0,75 kW) Output Flow Rate at 700 bar: 0,55 l/min		ZE4-Series (1,12 kW) Output Flow Rate at 700 bar: 0,82 l/min		ZE5-Series (2,24 kW) Output Flow Rate at 700 bar: 1,64 l/min		ZE6-Series (5,60 kW) Output Flow Rate at 700 bar: 2,73 l/min	
				Model Number [3] E = 230 V, 1 ph	(kg)	Model Number [3] E = 230 V, 1 ph	(kg)	Model Number [3] W = 400 V, 3 ph	(kg)	Model Number [3] W = 400 V, 3 ph	(kg)
		–	6,8	**ZE3008NE (B, I, J, G, W)**	45	**ZE4008NE (B, I, J, G, W)**	43	–	–	–	–
		–	9,8	**ZE3010NE (B, I, J, G, W)**	45	**ZE4010NE (B, I, J, G, W)**	49	**ZE5010NW (J, G)**	54	**ZE6010NW (J, G)**	72
		–	19,8	**ZE3020NE (B, I, J, G, W)**	57	**ZE4020NE (B, I, J, G, W)**	61	**ZE5020NW (J, G)**	66	**ZE6020NW (J, G)**	84
		–	39,0	**ZE3040NE (B, I, J, G, W)**	80	**ZE4040NE (B, I, J, G, W)**	84	**ZE5040NW (J, G)**	89	**ZE6040NW (J, G)**	107
	S/A	–	VM22	19,8	–	–	**ZE4720ME (B, W)**	65	–	–	–	–
	S/A	–	VM32	4,6	**ZE3204ME (B)**	39	–	–	–	–	–	–
	S/A	–	VM32	6,8	**ZE3208ME (B, I, J, G, W)**	41	**ZE4208ME (B, I, J, G, W)**	45	–	–	–	–
	S/A	–	VM32	9,8	**ZE3210ME (B, I, J, G, W)**	47	**ZE4210ME (B, I, J, G, W)**	51	**ZE5210MW (J, G)**	56	**ZE6210MW (J, G)**	74
	S/A	–	VM32	19,8	**ZE3220ME (B, I, J, G, W)**	59	**ZE4220ME (B, I, J, G, W)**	64	**ZE5220MW (J, G)**	68	**ZE6220MW (J, G)**	86
	S/A	●	VM33	4,6	**ZE3304ME (B)**	39	–	–	–	–	–	–
	S/A	●	VM33	6,8	**ZE3308ME (B, I, J, G, W)**	42	**ZE4308ME (B, I, J, G, W)**	46	–	–	–	–
	S/A	●	VM33	9,8	**ZE3310ME (B, I, J, G, W)**	48	**ZE4310ME (B, I, J, G, W)**	52	**ZE5310MW (J, G)**	57	**ZE6310MW (J, G)**	75
	S/A	●	VM33	19,8	**ZE3320ME (B, I, J, G, W)**	60	**ZE4320ME (B, I, J, G, W)**	64	**ZE5320MW (J, G)**	69	**ZE6320MW (J, G)**	87
	S/A	●	VM33	39,0	**ZE3340ME (B, I, J, G, W)**	83	**ZE4340ME (B, I, J, G, W)**	87	**ZE5340MW (J, G)**	92	**ZE6340MW (J, G)**	110
	S/A	●	VM33VAC	6,8	–	–	**ZE41008ME (B, I, J, G, W)**	46	–	–	–	–
	S/A	●	VM33VAC	19,8	–	–	**ZE41020ME (B, I, J, G, W)**	64	**ZE51020MW (J, G)**	69	**ZE61020MW (J, G)**	87
	S/A	●	VM33VAC	39,0	–	–	–	–	**ZE51040MW (J, G)**	92	**ZE61040MW (J, G)**	110
	S/A	●	VM33L	6,8	**ZE3608ME (B, I, J, G, W)**	42	–	–	–	–	–	–
	S/A	●	VM33L	19,8	**ZE3620ME (B, I, J, G, W)**	62	**ZE4620ME (B, I, J, G, W)**	66	–	–	–	–
	S/A	●	VM33L	39,0	**ZE3640ME (B, I, J, G, W)**	85	**ZE4640ME (B, I, J, G, W)**	89	–	–	–	–
	D/A	●	VM43	4,6	**ZE3404ME (B)**	39	–	–	–	–	–	–
	D/A	●	VM43	6,8	**ZE3408ME (B, I, J, G, W)**	42	**ZE4408ME (B, I, J, G, W)**	46	–	–	–	–
	D/A	●	VM43	9,8	**ZE3410ME (B, I, J, G, W)**	48	**ZE4410ME (B, I, J, G, W)**	52	**ZE5410MW (J, G)**	57	**ZE6410MW (J, G)**	74
	D/A	●	VM43	19,8	**ZE3420ME (B, I, J, G, W)**	60	**ZE4420ME (B, I, J, G, W)**	64	**ZE5420MW (J, G)**	69	**ZE6420MW (J, G)**	87
	D/A	●	VM43	39,0	**ZE3440ME (B, I, J, G, W)**	83	**ZE4440ME (B, I, J, G, W)**	87	**ZE5440MW (J, G)**	92	**ZE6440MW (J, G)**	110
	D/A	●	VM43L	6,8	**ZE3808ME (B, I, J, G, W)**	44	–	–	–	–	–	–
	D/A	●	VM43L	19,8	**ZE3820ME (B, I, J, G, W)**	62	**ZE4820ME (B, I, J, G, W)**	66	**ZE5820MW (J, G)**	71	**ZE6820MW (J, G)**	–
	D/A	●	VM43L	39,0	**ZE3840ME (B, I, J, G, W)**	85	**ZE4840ME (B, I, J, G, W)**	89	**ZE5840MW (J, G)**	94	**ZE6840MW (J, G)**	112
	S/A	–	VE32D	4,6	**ZE3104DE (B, I, J, G, W)**	43	–	–	–	–	–	–
	S/A	–	VE32D	6,8	**ZE3108DE (B, I, J, G, W)**	45	**ZE4108DE (B, I, J, G, W)**	49	–	–	–	–
	S/A	–	VE32D	9,8	**ZE3110DE (B, I, J, G, W)**	52	**ZE4110DE (B, I, J, G, W)**	55	**ZE5110DW (J, G)**	62	**ZE6110DW (J, G)**	79
	S/A	–	VE32D	19,8	**ZE3120DE (B, I, J, G, W)**	64	**ZE4120DE (B, I, J, G, W)**	68	**ZE5120DW (J, G)**	74	**ZE6120DW (J, G)**	92
	S/A	–	VE32D	39,0	–	–	**ZE4140DE (B, I, J, G, W)**	91	**ZE5140DW (J, G)**	97	**ZE6140DW (J, G)**	114
	S/A	●	VE33	4,6	**ZE3304SE (B, I, J, G, W)**	48	–	–	–	–	–	–
	S/A	●	VE33	6,8	**ZE3308SE (B, I, J, G, W)**	51	**ZE4308SE (B, I, J, G, W)**	55	–	–	–	–
	S/A	●	VE33	9,8	**ZE3310SE (B, I, J, G, W)**	57	**ZE4310SE (B, I, J, G, W)**	61	**ZE5310SW (J, G)**	67	**ZE6310SW (J, G)**	84
	S/A	●	VE33	19,8	**ZE3320SE (B, I, J, G, W)**	69	**ZE4320SE (B, I, J, G, W)**	73	**ZE5320SW (J, G)**	79	**ZE6320SW (J, G)**	97
	S/A	●	VE33	39,0	**ZE3340SE (B, I, J, G, W)**	92	**ZE4340SE (B, I, J, G, W)**	96	**ZE5340SW (J, G)**	102	**ZE6340SW (J, G)**	120
	S/A	●	VE33VAC	6,8	–	–	**ZE41108SE (B, I, J, G, W)**	52	–	–	–	–
	S/A	●	VE33VAC	19,8	–	–	**ZE41120SE (B, I, J, G, W)**	70	**ZE51120SW (J, G)**	76	**ZE61120SW (J, G)**	94
	S/A	●	VE33VAC	39,0	–	–	–	–	**ZE51140SW (J, G)**	99	**ZE61140SW (J, G)**	117
	D/A	●	VE43	4,6	**ZE3404SE (B, I, J, G, W)**	48	–	–	–	–	–	–
	D/A	●	VE43	6,8	**ZE3408SE (B, I, J, G, W)**	51	**ZE4408SE (B, I, J, G, W)**	55	–	–	–	–
	D/A	●	VE43	9,8	**ZE3410SE (B, I, J, G, W)**	57	**ZE4410SE (B, I, J, G, W)**	61	**ZE5410SW (J, G)**	67	**ZE6410SW (J, G)**	84
	D/A	●	VE43	19,8	**ZE3420SE (B, I, J, G, W)**	69	**ZE4420SE (B, I, J, G, W)**	73	**ZE5420SW (J, G)**	79	**ZE6420SW (J, G)**	97
	D/A	●	VE43	39,0	**ZE3440SE (B, I, J, G, W)**	92	**ZE4440SE (B, I, J, G, W)**	96	**ZE5440SW (J, G)**	102	**ZE6440SW (J, G)**	120

[1] S/A or D/A = For use with Single-Acting or Double-Acting cylinders and tools. [2] Additional details can be found in the Directional Control Valve section.

[3] "**E**" suffix model numbers shown are 230 VAC, 1-phase, 50/60 Hz. "**W**" suffix model numbers shown are 400 VAC, 3-phase, 50/60 Hz. Other voltages available as shown. Replace "**E**" voltage suffix with selected voltage character. Model number order example: **ZE4108DB** is 115VAC, 1 phase, 50/60 Hz. See Ordering Guide page 106 for voltage descriptions.

NOTE: Voltage options **K** (440 VAC, 3-phase, 50/60 Hz) and **R** (575 VAC, 3-phase, 60 Hz) are available on select models. Contact your local representative for availability.

NOTE: Valve operation "**L**" available on pumps with manual valve. Substitute "**M**" for "**L**" valve operation. Example: **ZE3608LE**.

Tel: +45 63 12 83 00 | Email: ps@hymatik.com | www.hymatik.com | Hvidkaervej 27a, DK-5250 Odense SV, Denmark

ZE-Series, Accessories

ENERPAC



Electric Box [1]

- **Back-lit LCD**
- **Pump usage information, hour and cycle counts**
- **Low-voltage warning and recording**
- **Self-test and diagnostic capabilities**
- **Pressure read-out [2]**
- **Auto-mode pressure setting [2]**
- **Information can be displayed in six languages [3]**

[1] Included on pumps with solenoid valves.
[2] When used with optional pressure transducer.
[3] English, French, German, Italian, Spanish and Portuguese.

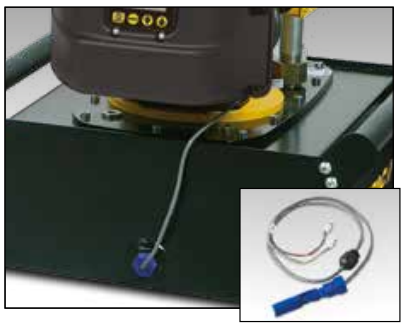

Level & Temperature Switch (L) [4]

- **Shuts down pump before oil level reaches an unsafe level, avoiding damage due to cavitation**
- **Shuts down pump when unsafe oil temperature is reached**
- **Ideal if pump is used in remote area without visual access to oil level.**

[4] 24 V, requires Electric Box. Available for 9,8; 19,8 and 39 litres reservoirs.

Accessory Kit Modelnr.	Fixed Temperature Signal (°C)	Operating Tempe-rature (°C)	Max. Pressure (bar)
ZLS-U4	80	5 - 110	10



Return Line Filter (F)

- **25 micron nominal filter removes contaminants from return oil flow before allowing it back into tank**
- **Internal by-pass valve prevents damage if filter is dirty**
- **With maintenance indicator**
- **Replaceable filter element PF25.**

Accessory Kit Modelnr.	Maximum Pressure (bar)	Maximum Oil Flow (l/min)	By-pass Setting (bar)
ZPF	13,8	45,4	1,7



Roll Cage (R)

- **For easy portability and hoisting**
- **Protects pump and electric box**
- **Available for all reservoir sizes.**



Skid Bar (K)

- **Provides easy two-hand lift**
- **Provides greater pump stability on soft or uneven surfaces.**



Foot Switch (U) [7]

- **Hands-free remote control on solenoid dump and 3-position valves**
- **With 3 meters cord.**

[7] 15 V, requires Electric Box.

Accessory Kit Nr.	Fits on reservoir size:	(kg)
ZRC-04	4,6 and 6,8 litres [5]	5,5
ZRC-04H	4,6 and 6,8 litres [6]	6,5
ZRB-10	9,8 litres	6,0
ZRB-20	19,8 litres	6,0
ZRB-40	39 litres	6,0

[5] For pump without heat exchanger
[6] For pump with heat exchanger.

Accessory Kit Nr.	Fits on reservoir size:	(kg)
SBZ-4	4,6 and 6,8 litres [5]	2,2
SBZ-4L	4,6 and 6,8 litres [6]	3,2

[5] For pump without heat exchanger
[6] For pump with heat exchanger.

Accessory Kit Nr.	Can be used on ZE-Series pumps with
ZCF-2	Solenoid VE-Series valves

ZE-Series, Accessories



Pressure Transducer (T) [1]

- **Displays pressure on LCD in bar, MPa or psi**
- **More accurate than analog gauge**
- **Calibration can be fine-tuned for certification**
- **Easy-viewing variable rate display**
- **"Set pressure" feature turns off motor at user defined pressure.**

[1] 24 V, requires Electric Box.



Pressure Switch (P) [2]

- **Controls pump, monitors system**
- **Adjustable pressure 35-700 bar**
- **Includes glycerine filled 1000 bar pressure gauge G2536L**
- **Accuracy ± 1,5% of full scale.**

[2] 24 V, requires Electric Box. Not available in combination with pressure transducer. Not available on LCD-electronics.

ZE Series



Reservoir Capacity:
4,6 - 39 litres

Flow at Rated Pressure:
0,55 - 2,73 l/min

Motor Size:
0,75 - 5,60 kW

Maximum Operating Pressure:
700 bar

Accessory Kit Modelnr.	Adjustable Pressure Range (bar)	Switch-point repea-tability	Dead-band (bar)
ZPT-U4	3,5 - 700	± 0,5%	3,5

Accessory Kit Modelnr.	Switch-point repea-tability	Deadband (bar)	Oil Ports (NPTF)
ZPS-E3	± 2%	8 - 38	3/8"

ZPT-U4 Pressure Transducer

More durable against mechanical and hydraulic shock than analog gauges.

- Digital pressure read-out provides accuracy of 0,5% of full scale.
- Easy-viewing variable rate display automatically varies increments between 3, 14, 35 and 145 bar as rate of pressure change increases.
- "Set pressure" feature turns off motor at user defined pressure (or shifts valve to neutral on VE33 and VE43 valves).



Heat Exchanger (H) [3]

- **Removes heat from by-pass oil to provide cooler operation**
- **Stabilizes oil viscosity, increasing oil life and reduces wear of pump and other hydraulic components.**

[3] 24 VDC, requires electric box.



Pressure Gauge (G)

- **Minimize risk of overloading to ensure long life of equipment**
- **ø 63 mm face diameter, glycerin filled**
- **Dual scale in bar and psi.**

Note: Pressure Gauge not available on pump models with pressure transducer. The pressure transducer provides digital pressure read-out on LCD-display.

ZHE-Series Heat Exchangers

Heat exchanger stabilizes oil temperature at 54 °C at 21 °C ambient temperature. Thermal transfer at 1,9 l/min and 21 °C ambient temperature: 900 Btu/hour [950 kJ].

Do not exceed max. oil flow of 26,5 l/min and max. pressure of 20,7 bar. Not suitable for water-glycol or high water based fluids.

Accessory Kit Nr.	Fits on reservoir size:	(kg)
ZHE-E04	4,6 and 6,8 litres	4,1
ZHE-E10	9,8; 19,8 and 39 litres	4,1

Accessory Kit Model Nr.	Description
G2536L	0 - 1000 bar, 0 - 15.000 psi

PA-Series, Air Hydraulic Foot Pumps

ENERPAC

▼ Shown: **PA1150, PA133**



PA
Series

Reservoir Capacity:
0,6 - 1,3 litres

Flow at Rated Pressure:
0,13 l/min

Air Consumption:
255 l/min

Maximum Operating Pressure:
700 bar



Reservoir Conversion Kit

Double the reservoir capacity of your existing PA133 with this easy to install conversion kit.

Model Number	PC66

- **Rugged construction – built for long life and easy service**
- **Swivel coupling simplifies hydraulic connection and pump operation**
- **Three-position treadle provides cylinder advance, hold or retract operation**
- **Operates in all positions for increased versatility in use and mounting (except PA1150)**
- **Base mounting slots provided on PA133.**

OIL FLOW VERSUS PRESSURE

at 6,9 bar air pressure

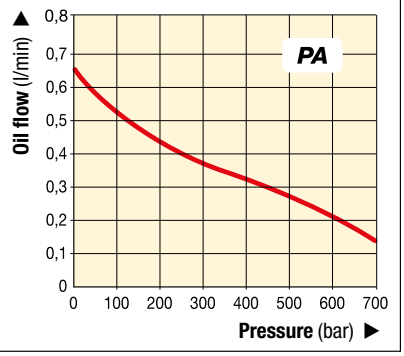

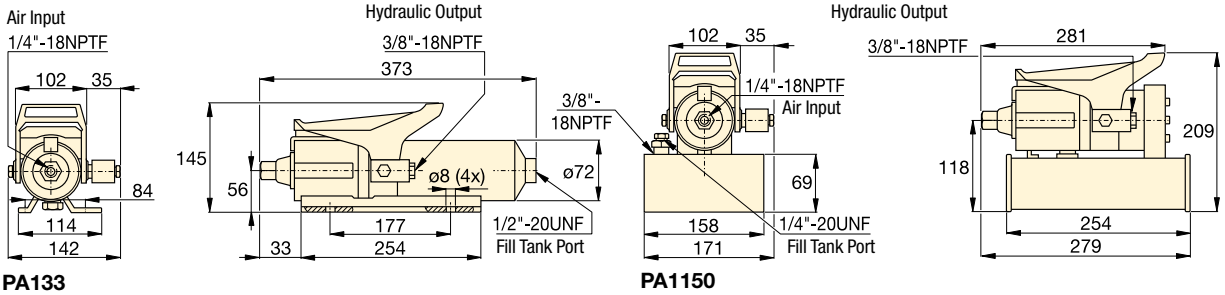

PA133 **PA1150**

Used with Cylinder	Usable Oil Capacity (cm^3)	Model Number	Pressure Rating (bar)	Output Flow Rate (l/min) No load	Output Flow Rate (l/min) Load	Valve Function	Air Pressure Range * (bar)	Air Consumption (l/min)	Sound Level (dBA)	(kg)
Single-Acting	589	**PA133**	700	0,65	0,13	Advance / Hold / Retract	4,1 - 8,3	255	85	5,4
	1311	**PA1150**	700	0,65	0,13	Advance / Hold / Retract	4,1 - 8,3	255	85	8,2

* Recommended Regulator-Filter-Lubricator: **RFL102**.

PAM-Series, Air Hydraulic Pumps

▼ Shown: **PAM1041**



PAM Series

Reservoir Capacity:
4,0 - 8,0 litres

Flow at Rated Pressure:
0,15 l/min

Air Consumption:
510 l/min

Maximum Operating Pressure:
700 bar

- **Twin air motor configuration delivers high-flow performance in first stage, up to 14 bar, for rapid cylinder advance**
- **4 and 8 litres reservoirs for use with a wide range of cylinders**
- **Integral shroud protects air motors and provides easy portability.**



Locking Valves

Pumps with 4/3 manual valves are available with 4/3 manual locking valves **VM4L** instead. Add suffix "**L**" to pump model number. Example: **PAM1042L**.

Page: 122



Remote Air Valve

For remote operation of PAM-Series air pumps. Permits either hand or foot operation.

Model Number	VA2

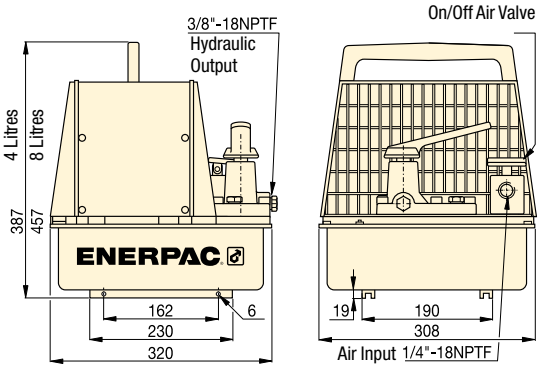

OIL FLOW VERSUS PRESSURE

at 6,9 bar air pressure

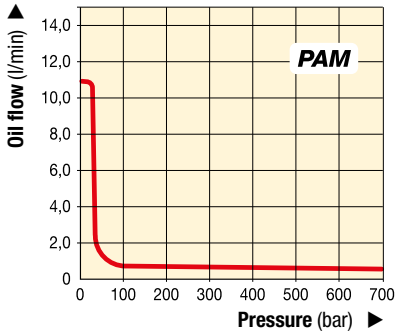

Used with Cylinder	Usable Oil Cap. (litres)	Model Number with Shroud	Pressure Rating (bar)	Output Flow Rate (l/min) 1st stage	Output Flow Rate (l/min) 2nd stage	Valve Function	Valve Type	Valve Model Number	Air Pressure Range * (bar)	Air Consumption (l/min)	Sound Level (dBA)	(kg)
Single-Acting	2,6	**PAM1021**	700	10,65	0,15	Advance/Hold/Retract	3/2	VM2	4,1 - 8,3	510	87	22,7
	7,6	**PAM1022**	700	10,65	0,15	Advance/Hold/Retract	3/2	VM2	4,1 - 8,3	510	87	27,2
Double-Acting	2,6	**PAM1041**	700	10,65	0,15	Advance/Hold /Retract	4/3	VM4	4,1 - 8,3	510	87	22,7
	7,6	**PAM1042**	700	10,65	0,15	Advance/Hold/Retract	4/3	VM4	4,1 - 8,3	510	87	27,2

* Recommended Regulator-Filter-Lubricator: **RFL102**.

PA-Series, Turbo II Air Hydraulic Pumps

ENERPAC

▼ Shown from top to bottom: **PAMG1402N, PARG1102N, PATG1102N, PATG1105N**



Compact Air Over Hydraulic

- **External adjustable pressure relief valve (behind sight glass)**
- **Return-to-tank port for use in remote valve applications**
- **Internal pressure relief valve provides overload protection**
- **Quieter operation – reduced noise level to 76 dBA**
- **Operating air pressure: 2,8 - 8,8 bar, enables pump to start at extremely low pressure**
- **High efficiency cast aluminium air motor**
- **Reinforced heavy-duty lightweight reservoir for applications in tough environments**
- **Air pendant for remote control operation.**



Regulator-Filter-Lubricator

Recommended for use with all Turbo air pumps. Provides clean, lubricated air and allows for air pressure adjustment. Steel bowl guards are standard.

Model Number	RFL102



Large Reservoir Models

The Turbo II Air Pump is also available with an enlarged reservoir: **PATG1105N, PAMG1405N** and **PARG1105N.**



Hoses

Enerpac offers a complete line of high quality hydraulic hoses. To ensure the integrity of your system, specify only genuine Enerpac hydraulic hoses.

Page: 128

▼ *Easily operated by hand or by foot.*



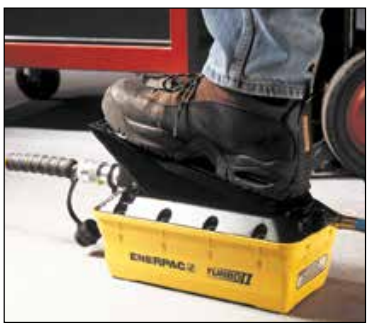

Used with Cylinder	Usable Oil Capacity (cm^3)	Model Number
Single-Acting	2081	PATG1102N
	3770	PATG1105N
Single-Acting	2081	PARG1102N
	3770	PARG1105N
Double-Acting	2081	PAMG1402N
	3770	PAMG1405N

PA-Series, Turbo II Air Hydraulic Pumps

PATG-models use a foot or hand operated treadle to control air and valve functions.

PAMG-models use a treadle with a locking feature to control air, and a 4-way manual valve to control hydraulics.

PARG-models use air pendant for remote control.

OIL FLOW VERSUS PRESSURE

at 6,9 bar dynamic air pressure

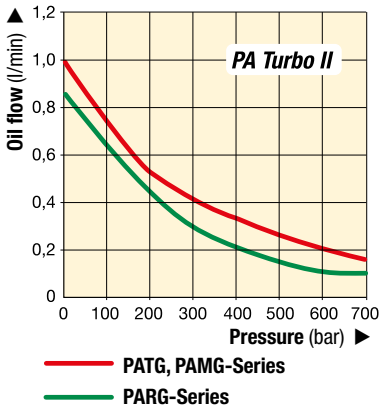

PATG PAMG PARG Series



Reservoir Capacity:
2,5 - 5,0 litres

Flow at Rated Pressure:
0,10 - 0,16 l/min

Air Consumption:
227 - 340 l/min

Maximum Operating Pressure:
700 bar

Maximum Pressure (bar)	Output Flow Rate (l/min) No Load	Load	Pump Series	Valve Function	Air Pressure Range (bar)	Air Consumption at 5,2 bar air (l/min)	Sound Level (dBA)
700	1,00	0,16	**PATG**	A / H / R *	2,8 - 8,8	340	76
700	0,76	0,10	**PARG**	A / H / R *	2,8 - 10,3	227	76
700	1,00	0,16	**PAMG**	A / H / R *	2,8 - 8,8	340	76

* Valve function: Advance / Hold / Retract.

Speed Chart

To determine how a specific pump will operate your cylinder, see the Pump-Cylinder Speed Chart in the 'Yellow Pages'.

Page: 405

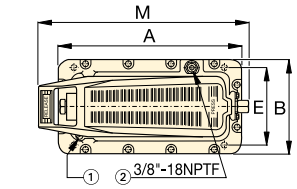

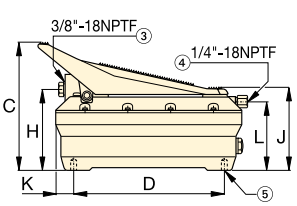

PATG1102N
PATG1105N

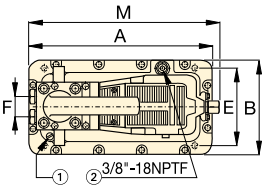

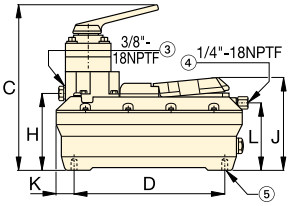

PAMG1402N
PAMG1505N

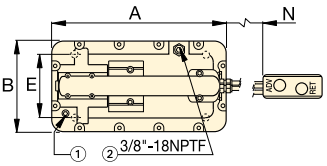

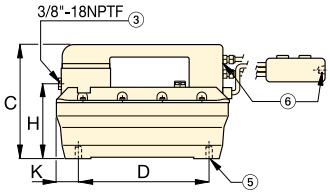

PARG1102N
PARG1105N

① Filtered 'Permanent' Tank Vent
② Return-to-Tank/Auxiliary Vent/ Fill Tank Port
③ Hydraulic Output
④ Swivel Air Input with Filter
⑤ 4 Mounting Holes for #10 thread forming screw. Max. depth into reservoir = 19 mm
⑥ Air Input with Filter on PARG models ¼"-18NPTF

Valve Operation	Turbo II Dimensions (mm) A	B	C	D	E	F	H	J	K	L	M	N	(kg)	Model Number
Treadle 3/3	313	165	211	230	102	–	129	146	42	113	347	–	8,2	**PATG1102N**
	396	201	209	230	102	–	131	146	86	112	437	–	9,9	**PATG1105N**
Air Pendant 3/3	313	165	200	230	102	–	129	–	42	–	–	4500	10,0	**PARG1102N**
	396	201	209	230	102	–	131	–	86	–	–	4500	11,7	**PARG1105N**
Manual 4/3	313	165	267	230	102	36	130	152	42	113	315	–	11,0	**PAMG1402N**
	396	201	267	230	102	36	132	152	86	112	405	–	12,7	**PAMG1405N**

XA-Series, Air Driven Hydraulic Foot Pumps

ENERPAC

▼ Shown: **XA11G**



Productivity & Ergonomics

- **Ergonomic design for less operator fatigue**
- **Variable oil flow & fine metering for precise control**
- **Higher oil flow for increased productivity**
- **Closed hydraulic system prevents contamination and allows pump usage in any position**
- **Pedal lock function for retract position**
- **External adjustable pressure setting valve**
- **Ground screw for improved ATEX explosion safety.**

Ex II 2 GD ck T4

▼ *Easy operated by foot. No need to fully lift up foot – rest bodyweight on heel, resulting in a handsfree and stabile working position.*





Optional Pressure Gauge
Integrated gauge with calibrated scale reading in bar, psi and MPa for actual pressure reading.



4/3 Control Valve
For powering double-acting hydraulic cylinders and tools.



2 Litres Reservoir
Double oil capacity for powering larger hydraulic cylinders and tools.



"Joy-stick" Lever Kit
Customer installed set of handles for manual operation of both pedals.

Model Number [1]	XLK1



Swivel Connector
Customer installed swivel connector for optimal orientation of the hydraulic hose.
See page 133 for details.

Model Number [1]	XSC1

[1] Accessories must be ordered separately.

Air Driven Hydraulic Foot Pumps



Production Application

XA11 pump is used with a 13 tons hollow cylinder to compress and position diesel engine valve springs.

The operator benefits from the fine metering capacities of this pump to apply the mandatory precise stroke and force.

XA Series



Reservoir Capacity:
1,0 - 2,0 litres

Flow at Rated Pressure:
0,25 l/min

Air Consumption:
283 - 991 l/min

Maximum Operating Pressure:
700 bar

▼ XA-SERIES PERFORMANCE CHART

Maximum Pressure (bar)	Output Flow Rate (l/min) No load	Output Flow Rate (l/min) Load	Pump Series	Valve Function	Dynamic Air Pressure (bar)
700	2,0	0,25	**XA1**	Advance / Hold / Retract	2,1 - 8,6

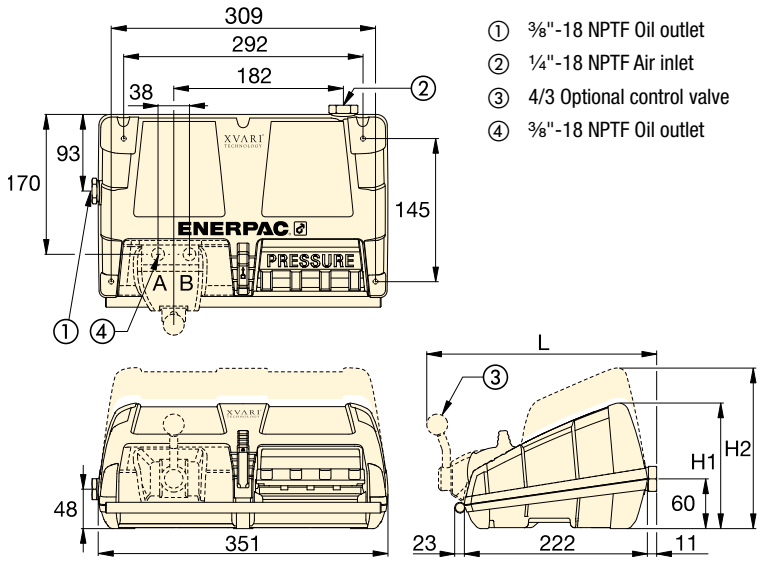

① ⅜"-18 NPTF Oil outlet
② ¼"-18 NPTF Air inlet
③ 4/3 Optional control valve
④ ⅜"-18 NPTF Oil outlet

OIL FLOW VERSUS PRESSURE

at 6,9 bar dynamic air pressure

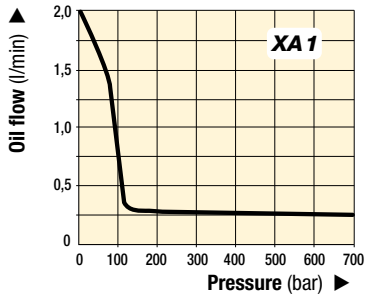



Regulator-Filter-Lubricator

Recommended for use with all XA-Series Air pumps.
Provides clean, lubricated air and allows for air pressure adjustment.

Model Number [1]	RFL102

▼ SELECTION CHART

For use with cylinder or tool	Usable Oil Capacity (litres)	Model Number [1]	Pressure Gauge	3-way 3-pos. Valve	4-way 3-pos. Valve	Dimensions (mm) H1	Dimensions (mm) H2	Dimensions (mm) L	(kg)
Single-acting	1,0	**XA11** [2]	–	•	–	152	–	–	8,6
	2,0	**XA12** [2]	–	•	–	–	170	–	10,2
Single-acting	1,0	**XA11G**	•	•	–	152	–	–	8,8
	2,0	**XA12G**	•	•	–	–	170	–	10,4
Double-acting	1,0	**XA11V**	–	–	•	152	–	279	10,1
	2,0	**XA12V**	–	–	•	–	170	279	11,7
Double-acting	1,0	**XA11VG**	•	–	•	152	–	279	10,3
	2,0	**XA12VG**	•	–	•	–	170	279	11,9

[1] High-Flow coupler CR400 and accessories must be ordered separately. [2] Available as cylinder-pump set, see page 62.

Tel: +45 63 12 83 00 | Email: ps@hymatik.com | www.hymatik.com | Hvidkaervej 27a, DK-5250 Odense SV, Denmark

ZA4-Series, Modular Air Hydraulic Pumps

ENERPAC

▼ Shown: **ZA4208MX, ZA4420MX**



Z Class — Tough, Dependable, Innovative

- **ATEX 95 certified for use in potentially explosive atmospheres**
- **Features Z-Class high efficiency pump design, higher oil flow and bypass pressure**
- **Two-speed operation reduces cycle time for improved productivity**
- **User adjustable relief valve built-in on manual valves. Oil ports on valves are 3/8" NPTF**
- **Optional heat exchanger warms exhaust air to prevent freezing and cools the oil**
- **Full sight oil level glass on 9,8, 19,8 and 39 litres reservoirs, oil level indicators on 4,6 and 6,8 litres reservoirs.**

ATEX 95 Certified

The Enerpac ZA4-series air pumps are tested and certified according to the **Equipment Directive 94 / 9 / EC "ATEX Directive"** for equipment and protective systems intended for use in potentially explosive atmospheres.

Ex II 2 GD ck T4
DEKRA 0602

Page: 395

Speed Chart

To determine how a specific pump will operate your cylinder, see the Pump-Cylinder Speed Chart in the 'Yellow Pages'.

Page: 405



Hoses

Enerpac offers a complete line of high quality hydraulic hoses. To ensure the integrity of your system, specify only genuine Enerpac hydraulic hoses.

Page: 128

Used with Cylinder	Reservoir Size (litres)	Manual Valve [1] Model Number	Valve Function	Model Number	Output Flow Rate [2] at 7 bar	at 50 bar	at 350 bar	at 700 bar	Relief Valve Adjustment Range (bar)	Maximum Air Consumption [3] (l/min)
–	4,6	–	–	**ZA4004NX**	14,0	11,0	1,8	**1,3**	–	2840
Single-acting	4,6	VM32	Advance / Retract	**ZA4204MX**	14,0	11,0	1,8	**1,3**	70 - 700	2840
	6,8	VM33	Advance / Hold /Retract	**ZA4308MX**	14,0	11,0	1,8	**1,3**	70 - 700	2840
	9,8	VM33L	Advance / Hold /Retract	**ZA4610MX**	14,0	11,0	1,8	**1,3**	70 - 700	2840
Double-acting	4,6	VM43	Advance / Hold /Retract	**ZA4404MX**	14,0	11,0	1,8	**1,3**	70 - 700	2840
	6,8	VM43	Advance / Hold /Retract	**ZA4408MX**	14,0	11,0	1,8	**1,3**	70 - 700	2840
	9,8	VM43L	Advance / Hold /Retract	**ZA4810MX**	14,0	11,0	1,8	**1,3**	70 - 700	2840
	19,8	VM43	Advance / Hold /Retract	**ZA4420MX**	14,0	11,0	1,8	**1,3**	70 - 700	2840
	39	VM43	Advance / Hold /Retract	**ZA4440MX**	14,0	11,0	1,8	**1,3**	70 - 700	2840

[1] See pages 122-123 for hydraulic symbols of these valves.
[2] Actual oil flow will vary with air supply.
[3] Dynamic air pressure range: 4 - 7 bar.

Modulair Air Hydraulic Pumps

▼ **This is how a ZA4-Series pump model number is built up:**

Z	A	4	2	08	M	X	-	F	H	R	
1 Product Type	2 Motor Type	3 Flow Group	4 Valve Type	5 Reservoir Size	6 Valve Operation	7 Motor Voltage		8 Options			

1 Product Type
Z = Pump Class

2 Prime Mover
A = Air motor

3 Flow Group
4 = 1,3 l/min @ 700 bar

4 Valve Type
0 = No valve, with cover plate
2 = 3/2 manual valve **VM32**
3 = 3/3 manual valve **VM33**
4 = 4/3 manual valve **VM43**
6 = 3/3 manual locking valve **VM33L** with pilot operated check
7 = 3/2 manual valve **VM22**
8 = 4/3 manual locking valve **VM43L** with pilot operated check.

5 Reservoir Size
04 = 4,6 litres
08 = 6,8 litres
10 = 9,8 litres
20 = 19,8 litres
40 = 39 litres

6 Valve Operation
M = Manual valve
N = No valve

7 Motor Voltage
X = Not applicable

8 Options
F = Return Line Filter
G = 1000 bar gauge
H = Heat exchanger (on 4,6 and 6,8 litres reservoir only)
K = Skid Bar (on 4,6 and 6,8 litres reservoir only)
N = No reservoir handles (includes lifting eyes on 9,8, 19,8 and 39 litres)
R = Roll Cage

Ordering Example
Model Number: **ZA4208MX-FHK**
ZA4208MX-FHK is an air operated pump with a 3-way, 2-position manual valve, 6,8 litres reservoir, filter, heat exchanger and skid bar.

ZA4 Series



Reservoir Capacity:
4,6 - 39 litres

Flow at Rated Pressure:
1,3 l/min

Air Consumption:
2840 l/min

Maximum Operating Pressure:
700 bar

① User adjustable relief valve on all manual valves. ⅜" NPTF on A and B ports; ¼"NPTF on auxiliary ports.
② Air inlet ½" NPTF
③ Return Line Filter (optional)
④ Oil Sight Gauge
⑤ Roll Cage (optional)
⑥ Oil Drain
⑦ Lifting eyes (optional)
⑧ Handles
⑨ Skid Bar (Modelnr. SBZ4) (optional)

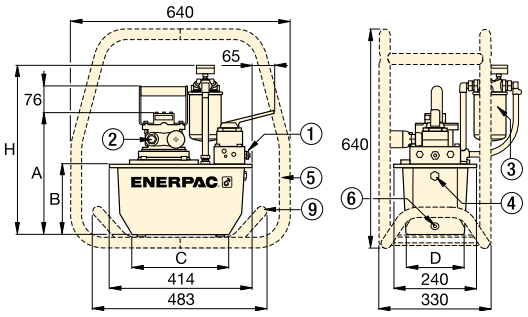

ZA4-Series Pumps with 4,6 - 6,8 litres reservoir

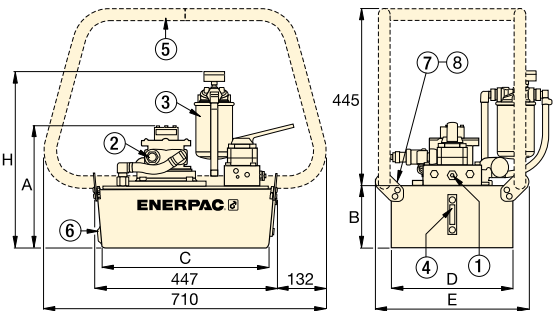

ZA4-Series Pumps with 9,8, 19,8 and 39 litres reservoir

Sound Level (dBA)	Motor Size (kW)	Dimensions (mm) A	B	C	D	E	H	(kg)	Model Number
80 - 95	3,0	295	142	279	152	–	429	27	**ZA4004NX**
80 - 95	3,0	295	142	279	152	–	429	30	**ZA4204MX**
80 - 95	3,0	356	203	279	205	–	490	34	**ZA4308MX**
80 - 95	3,0	330	180	414	421	500	467	51	**ZA4610MX**
80 - 95	3,0	295	142	279	152	–	429	31	**ZA4404MX**
80 - 95	3,0	356	203	279	205	–	490	35	**ZA4408MX**
80 - 95	3,0	305	155	419	305	384	442	40	**ZA4810MX**
80 - 95	3,0	330	180	414	421	500	467	52	**ZA4420MX**
80 - 95	3,0	419	269	399	505	584	556	75	**ZA4440MX**

OIL FLOW VERSUS PRESSURE
at 7 bar air & 2000 l/min air consumption

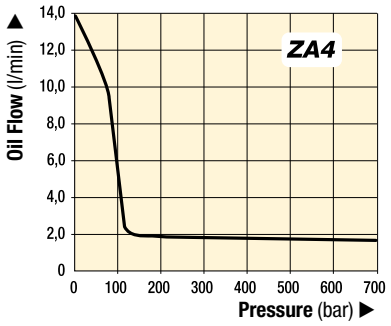

ZG-Series, Gasoline Hydraulic Pumps

ENERPAC

▼ Shown from left to right: **ZG6440MX-BFCH, ZG5420MX-B**



Z Tough, Dependable, Innovative CLASS

- **Features Z-Class high efficiency pump design, higher oil flow and bypass pressure**
- **Two-speed operation reduces cycle time for improved productivity**
- **User adjustable relief valve built-in on manual valves. Oil ports on valves are 3/8" NPTF**
- **Available in three 4-cycle engine sizes: 4,1 kW Honda and 4,8 kW and 9,7 kW Briggs & Stratton**
- **Full sight oil level glass on all reservoirs allow quick and easy oil level monitoring.**

ZG6-Series

- **Easy serviceable 9,7 kW, 4-cycle gasoline engine with electric start, pressurized oil and 12 Volt charge output for accessories**
- **Dual forced air heat exchanger stabilizes hydraulic oil temperature**
- **Sturdy wheeled cart with collapsible handles.**



GA45GC Gauge Adaptor Assembly

Protect yourself from system overloading by simply ordering one part number for a pre-assembled gauge, adaptor block and coupler.

Page: 142



User Adjustable Relief Valve

All VM-Series directional valves have a user adjustable relief valve to allow the operator to easily set the optimum working pressure.

Page: 122

▼ **SELECTION CHART**

Used with Cylinder	Reservoir Size (litres)	Manual Valve [1] Model Number	Valve Function	Model Number with Roll Cage	Output Flow Rate (l/min) at 7 bar	at 50 bar	at 350 bar	at 700 bar	4-Cycle Engine Type and Size
Single-Acting	9,8	VM33	Advance / Hold / Retract	**ZG5310MX-R**	11,5	10,7	1,8	**1,6**	Honda 4,1 kW
	19,8	VM33	Advance / Hold / Retract	**ZG5320MX-R**	11,5	10,7	1,8	**1,6**	
Double-Acting	9,8	VM43	Advance / Hold / Retract	**ZG5410MX-R**	11,5	10,7	1,8	**1,6**	
	19,8	VM43	Advance / Hold / Retract	**ZG5420MX-R**	11,5	10,7	1,8	**1,6**	
Single-Acting	9,8	VM33	Advance / Hold / Retract	**ZG5310MX-BR**	6,5	6,2	1,8	**1,6**	Briggs & Stratton 4,8 kW
	19,8	VM33	Advance / Hold / Retract	**ZG5320MX-BR**	6,5	6,2	1,8	**1,6**	
Double-Acting	9,8	VM43	Advance / Hold / Retract	**ZG5410MX-BR**	6,5	6,2	1,8	**1,6**	
	19,8	VM43	Advance / Hold / Retract	**ZG5420MX-BR**	6,5	6,2	1,8	**1,6**	
	39	VM43L	Advance / Hold / Retract	**ZG5840MX-BR**	6,5	6,2	1,8	**1,6**	
Double-Acting	39	VM43	Advance / Hold / Retract	**ZG6440MX-BCFH**	14,7	14,5	3,7	**3,3**	Briggs & Stratton 9,7 kW
	–	–	–	**–**	–	–	–	**–**	

[1] See pages 122-123 for hydraulic symbols of these valves.

Gasoline Hydraulic Pumps

ZG-Series, Gasoline Pump Performance

Elevation can affect the performance of any gasoline engine. ZG-Series pumps are designed to develop rated performance at elevations up to 1500 m. For applications above this elevation, please consult your Enerpac office.

Optional: Diesel Engine

ZG-Series pumps can also be equipped with a Diesel Engine. Contact Enerpac for details.

ZG Series



Reservoir Capacity:
9,8 - 19,8 - 39 litres

Flow at Rated Pressure:
1,6 - 3,3 l/min

Engine Size:
4,1 - 4,8 - 9,7 kW

Maximum Operating Pressure:
700 bar

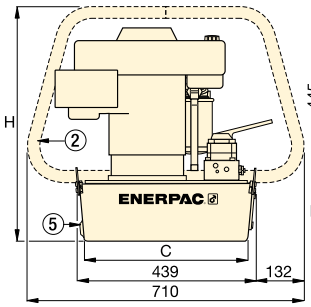

① User adjustable relief valve on all manual valves. ⅜" NPTF on A and B ports; ¼" NPTF on auxiliary ports.
② Roll Bar
③ Return Line Filter
④ Oil Level Gauge
⑤ Oil Drain

ZG5-Series

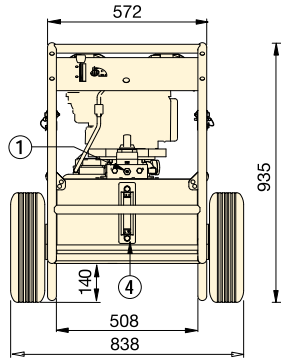

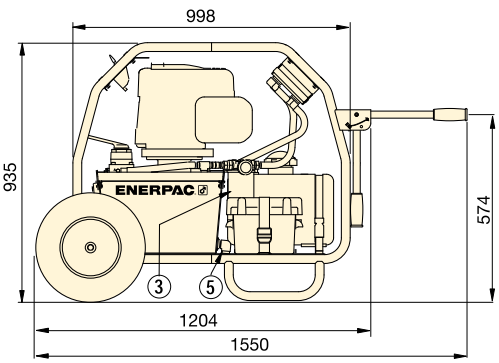

ZG6-Series



High Pressure Hoses

Enerpac offers a complete line of high quality hydraulic hoses. To ensure the integrity of your system, specify only genuine Enerpac hydraulic hoses.

Page: 128

Speed Chart

To determine how a specific pump will operate your cylinder, see the Pump-Cylinder Speed Chart in the 'Yellow Pages'.

Page: 405

	Relief Valve Adjustment Range (bar)	Sound Level (dBA)	Dimensions (mm) B	C	D	E	H	(kg)	Model Number with Roll Cage
	70 - 700	88 - 93	155	419	305	384	600	52	ZG5310MX-R
			180	414	421	500	625	64	ZG5320MX-R
			155	419	305	384	600	52	ZG5410MX-R
			180	414	421	500	625	64	ZG5420MX-R
	70 - 700	88 - 93	155	419	305	384	600	50	ZG5310MX-BR
			180	414	421	500	625	63	ZG5320MX-BR
			155	419	305	384	600	50	ZG5410MX-BR
			180	414	421	500	625	63	ZG5420MX-BR
			269	399	505	557	714	86	ZG5840MX-BR
	70 - 700	88 - 93	–	–	–	–	–	152	ZG6440MX-BCFH
			–	–	–	–	–	–	–

OIL FLOW VERSUS PRESSURE

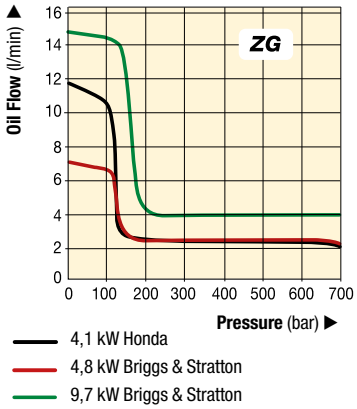

Custom Hydraulic Pumps

ENERPAC

Enerpac offers a wide variety of hydraulic pumps for all your custom needs. Still, many applications require a customized pump to operate the system.

Hydraulic pumps are at the heart of any hydraulic system. Different systems require different flow, pressure and control.

Enerpac offers a wide variety of hydraulic pumps from small hand-operated pumps to large gasoline-powered pumps.

Still, many applications require a customized pump to operate the system. These may include larger reservoir capacity, custom valve configurations or added electrical controls. Enerpac also specializes in power units and controls used for synchronous lifting/lowering of multiple jacking points.

Overview Custom Pumps



▲ *Custom hydraulic pumps for a bridge deck launching system.*

CUSTOMIZABLE FEATURES:

- Reservoir and Frame
- Valves
- Controls
- Oil
- Seals
- Pressure and Flow
- Coolers and Heaters
- Paint
- Motor Type



◀ *Private-label hand or foot pumps with fire-resistant oil and special exterior paint.*



◀ *XC-Series Cordless Pump with custom black shroud for private-label OEM customer to be used with a variety of hand held hydraulic tools.*



◀ *Electric pump with large cooler and controls for high-temperature applications.*

Directional Control Valves

Enerpac hydraulic valves are available in a wide variety of models and configurations.

Whatever your requirements… directional control, flow control, or pressure control… you can be sure that Enerpac has the correct valve to match your application exactly.

Designed and manufactured for safe operation up to 700 bar, the range of Enerpac valves allows for direct pump mounting, remote mounting, manual or solenoid actuation, and in-line installation, giving you flexible solutions to control your hydraulic system.

Valve Type	Series		Page
Pump Mounted Manual and Solenoid Directional Control Valves	VM VE		122 ▶
Remote Mounted Manual Directional Control Valves	VC		124 ▶
Valve Dimensions	VM VE VC	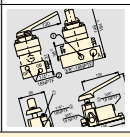	125 ▶



Pressure & Flow Control Valves

For more hydraulic system control with pressure relief valves, shut-off valves, check valves and sequence valves see our “System Components”.

Page: 144

Valving Help

See Basic System Set-Up and Valve Information in our ‘Yellow Pages’.

Page: 395



Pump Mounted Directional Control Valves

ENERPAC

▼ Shown from left to right: **VM32, VE33, VM33, VM43L, VE43**



- **Advance/Retract and Advance/Hold/Retract operation of single-and double-acting cylinders and tools**
- **Manual or solenoid operation**
- **Pump mounting will retrofit on most Enerpac pumps**
- **Available "locking" option on VM-Series valves for load-holding applications**
- **Standard "locking" feature on VE-Series 3-position valves**
- **User adjustable relief valve allows the operator to easily set the working pressure.**

Venturi Valve Technology

- **For fast return of single-acting gravity and spring return cylinders**
- **Available as manual or solenoid valve on ZU4- and ZE-Series electric pumps**
- **Retrofit Venturi valve kits for field installation on existing ZU4- and ZE-Series electric pumps.**

Adjustable relief valve

All valves feature several gauge ports for "system", A port and B port pressure monitoring. User adjustable relief valves are included on all models to allow the operator to easily set the optimum working pressure for each application.

VM33 and VE43 valves include "System Check" feature, for more precise pressure holding and improved system control.

The VM33 has improved porting which provides faster cylinder retraction while motor is running.

Locking Valves

For applications that require positive load holding, VM-Series valves (except VM22 and VM32) are available with a pilot-operated check valve. This option provides hydraulic locking of the load until the valve is shifted into the retract position.

Reliable Control of Single and Double-Acting Cylinders and Tools

Valve Operation	Used with Cylinder	Valve Type	
Manual	Single-acting	3-Way, 2-Position	
Manual	Single-acting	3-Way, 2-Position	
Manual	Single-acting	3-Way, 3-Position, Tandem Center	
Manual	Single-acting	3-Way, 3-Position, Tandem Center, Venturi Return Assist	
Manual	Double-acting	4-Way, 3-Position, Tandem Center	
Manual	Single-acting	3-Way, 3-Position, Tandem Center, Locking	
Manual	Double-acting	4-Way, 3-Position, Tandem Center, Locking	
Solenoid 24 VDC	Single-acting	3-Way, 2-Position	
Solenoid 24 VDC	Single-acting	3-Way, 2-Position, Dump	
Solenoid 24 VDC	Single-acting	3-Way, 3-Position, Tandem Center Venturi Return Assist	
Solenoid 24 VDC	Single-acting	3-Way, 3-Position, Tandem Center	
Solenoid 24 VDC	Double-acting	4-Way, 3-Position, Tandem Center	

For remote valve information, see page 124.
See page 125 for valve dimensions.

Pump Mounted Directional Control Valves

VM VE Series



Maximum Flow Capacity:
17 l/min

Maximum Operating Pressure:
700 bar

Model Number	Hydraulic Symbol	Schematic Flowpath			
		Advance	Neutral	Retract	(kg)
VM22	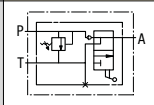	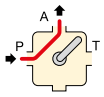		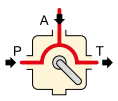	2,5
VM32	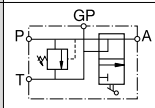	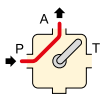		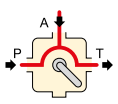	2,5
VM33	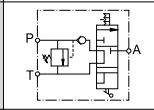	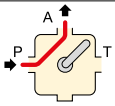	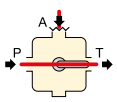	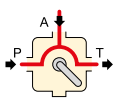	3,0
VM33VAC	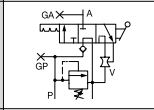	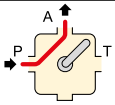	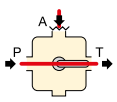	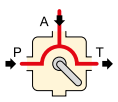	3,5
VM43	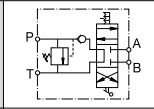	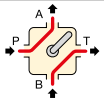	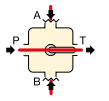	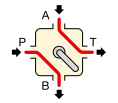	3,1
VM33L	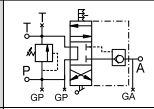	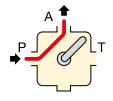	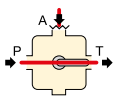	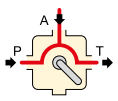	4,8
VM43L	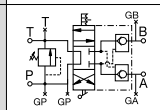	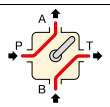	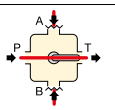	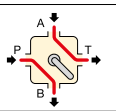	4,9
VE32	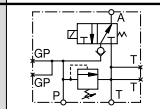	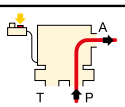	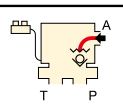	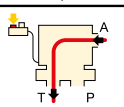	3,9
VE32D	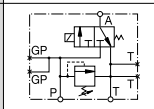	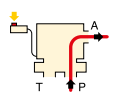		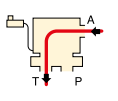	3,9
VE33VAC	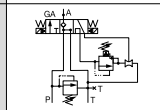	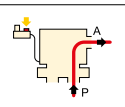	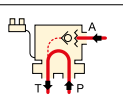	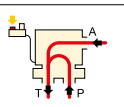	10,0
VE33	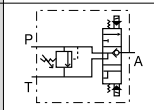	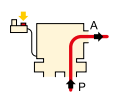			9,3
VE43					9,3

Assisted Return Pumps with Venturi Valve Technology

To improve productivity and plunger retraction, Enerpac offers valve configurations designed to accelerate your cylinder retraction speeds, ZU4 and ZE-Series pumps feature **Venturi Valve Technology** to facilitate the faster return of single-acting gravity and spring return cylinders.

See valve type in ZU4 and ZE-pump ordering matrix on pages 100 and 106.

Venturi Valve Retrofit Kits

For field installation on existing ZU4, ZE and ZA-Series pumps, Retrofit Kits are available for manual and solenoid operated valves.

For valve model	For valve operation	Retrofit Kit Model Nr.
VM33, VM33L	Manual	**VM33RVK**
VE33	Solenoid	**VUV5**

Spring Centred Valve Kits

VM and VC-Series manual 3-position valves can be easily converted into spring centred valves. With these retro-fit kits the handle will automatically move into the neutral valve position when released.

For valve model	Model Number
VM33, VM43	**VMC3343K**
VM33L, VM43L	**VMC3343KL**
VC3, VC15, VC4, VC20	**VMC34K**
VC3L, VC15L, VC4L, VC20L	**VMC34KL**

Remote Manual Directional Control Valves

ENERPAC

▼ Shown from left to right: **VC20, VC4L**



Remote Control of Single and Double-Acting Cylinders and Tools



Locking Valves

For applications that require positive load holding, VC-Series valves are available with a pilot-operated check valve. This option provides hydraulic locking of the load until the valve is shifted into the retract position.

- **Advance/Hold/Retract operation for use with single-acting or double-acting cylinders and tools**
- **Return line kit included with remote valves.**

Valve Operation	Used with Cylinder	Valve Type	Model Number	Hydraulic Symbol	Schematic Flowpath			(kg)
					Advance	Hold	Retract	
Manual	Single-Acting	3-Way, 3-Position, Tandem Center	**VC3**	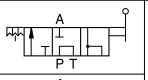	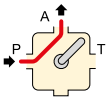	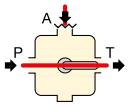	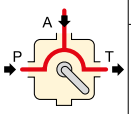	2,9
Manual	Single-Acting	3-Way, 3-Position, Tandem Center, Locking	**VC3L**	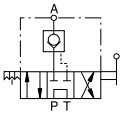				4,7
Manual	Single-Acting	3-Way, 3-Position, Closed Center	**VC15**	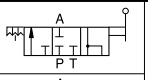	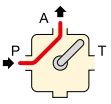	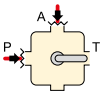	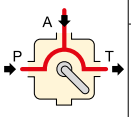	2,9
Manual	Single-Acting	3-Way, 3-Position, Closed Center, Locking	**VC15L**	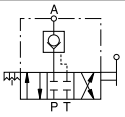				4,7
Manual	Double-Acting	4-Way, 3-Position, Tandem Center	**VC4**	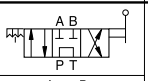	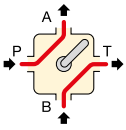	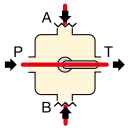	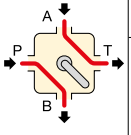	2,9
Manual	Double-Acting	4-Way, 3-Position, Tandem Center, Locking	**VC4L**	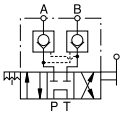				4,7
Manual	Double-Acting	4-Way, 3-Position, Closed Center	**VC20**	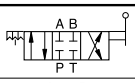	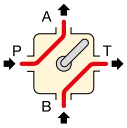	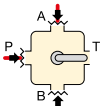	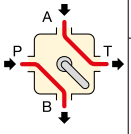	2,9
Manual	Double-Acting	4-Way, 3-Position, Closed Center, Locking	**VC20L**	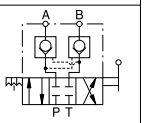				4,7

Directional Control Valves Dimensions

Pump Mounted Directional Control Valves

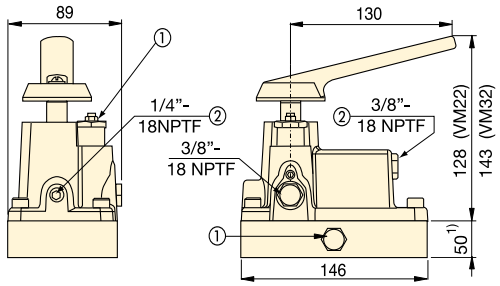

VM22, VM32

1) VM22 only

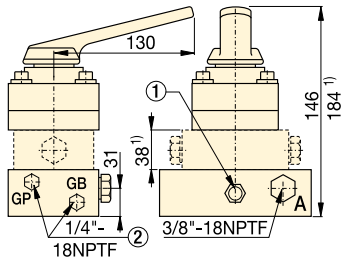

VM33, VM33L, VM33VAC, VM43, VM43L

1) VM33VAC, VM33L and VM43L only

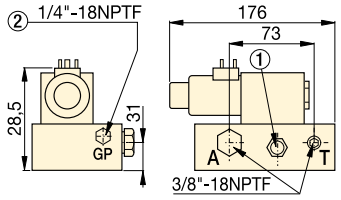

VE32D

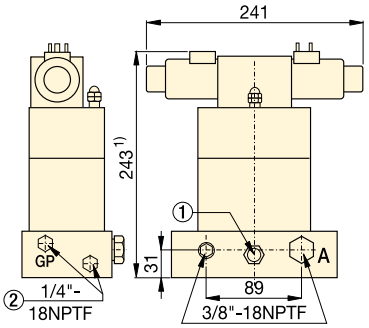

VE33, VE33VAC

1) VE33VAC is 38 mm higher: 281 mm

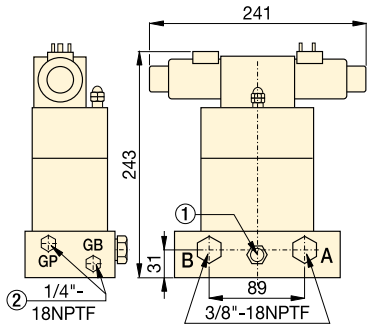

VE43

Remote Manual Directional Control Valves

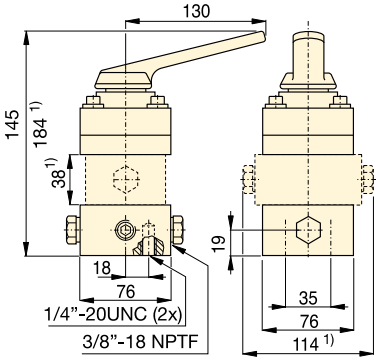

VC3, VC3L, VC15, VC15L
VC4, VC4L, VC20, VC20L

1) VC3L, VC15L, VC4L and VC20L only

VM
VE
VC
Series



Maximum Flow Capacity:
17 l/min

Maximum Operating Pressure:
700 bar



Spring Centred Valve Kits

VM and VC-Series manual 3-position valves can be easily converted into spring centred valves. With these retro-fit kits the handle will automatically move into the neutral valve position when released.

For valve models	Model Number
VM33, VM43	**VMC3343K**
VM33L, VM43L	**VMC3343KL**
VC3, VC15, VC4, VC20	**VMC34K**
VC3L, VC15L, VC4L, VC20L	**VMC34KL**



Gauges

Minimize the risk of overloading and ensure long, dependable service from your equipment. Refer to the System Components Section for a full range of gauges.

Page: 127



Fittings

For additional fittings see the fitting page of the System Components section in this catalogue.

Page: 133

Valving Help

See Basic System Set-Up and Valve Information in our 'Yellow Pages'.

Page: 406

Tel: +45 63 12 83 00 | Email: ps@hymatik.com | www.hymatik.com | Hvidkaervej 27a, DK-5250 Odense SV, Denmark

System Components & Control Valves

ENERPAC

Enerpac System Components:
All the additional elements you need to complete your high pressure hydraulic system and get started.

Engineered to work with your Enerpac cylinders, pumps and tools, all Enerpac components are designed to the most exacting standards.

With this complete line of hydraulic hoses, couplers, fittings, manifolds, oil and gauges, Enerpac has the accessories to complement your system and ensure the efficient operation, long life and safety of your hydraulic equipment.

Yellow Pages

For sample system set-ups and how to correctly specify your system components, please view the Enerpac "Yellow Pages" section in this catalogue.

Page: 394

Maintain System Integrity

Use Enerpac System Components, designed to interface with Enerpac cylinders, pumps and tools to ensure your system operates at peak performance.



System Components & Control Valves Overview

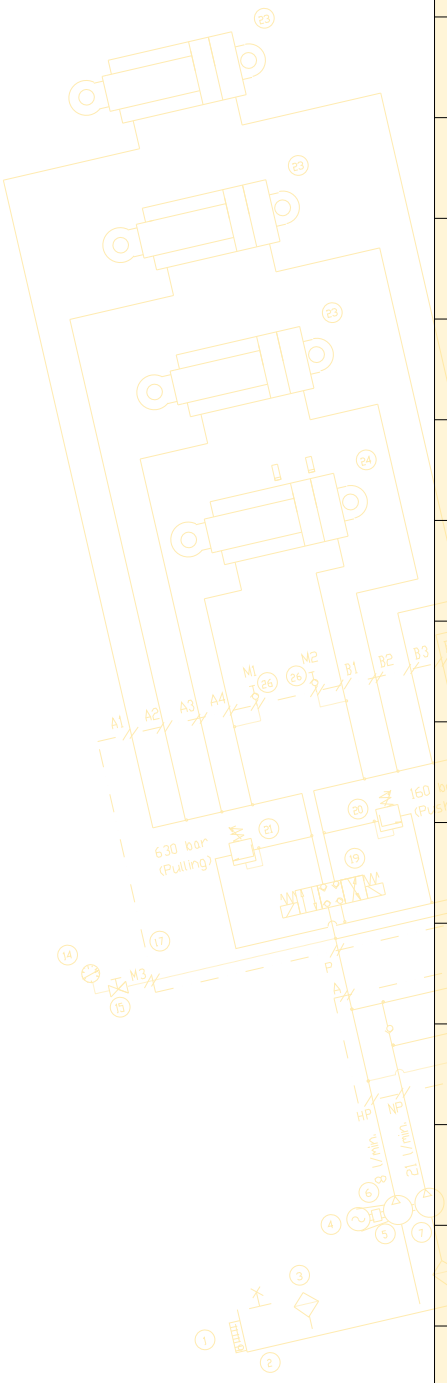

Component Type	Series		Page
High Pressure Hoses	H700		128 ▶
Couplers	A, C, F, T		130 ▶
Hydraulic Oil	HF		132 ▶
Manifolds	A		132 ▶
Control Manifolds	AM		132 ▶
Fittings	BFZ, FZ XSC		133 ▶
Split-Flow Manifolds	SFM		134 ▶
Force Gauges Pressure Gauges	GF GP		136 ▶
Pressure Gauges, glycerine filled Pressure Gauges, dry	G H		138 ▶
Test System Gauges	T		140 ▶
Digital Hydraulic Pressure Gauge	DGR		141 ▶
Gauge Adaptor Assembly	GA45		142 ▶
4-Way Manifold Assembly with Gauges	AMGC		142 ▶
Gauge Adaptors Swivel Adaptor, Needle Valves	GA NV, V		143 ▶
Pressure and Flow Control Valves	V		144 ▶

H700-Series, High Pressure Hoses

ENERPAC

▼ HC7206



Safety and Quality

To ensure the integrity of your system, specify only Enerpac hydraulic hoses.

WARNING !

- **Do not exceed 700 bar maximum pressure.**
- **Do not handle hoses which are under pressure.**

More safety instructions in our 'Yellow pages'.

Page: 396

Thermo-Plastic Safety Hoses (H700-Series)

- **For demanding applications, featuring a 4:1 safety factor**
- **Maximum working pressure of 700 bar**
- **Outside jacket is polyurethane, to provide maximum abrasion resistance**
- **Exhibits low volumetric expansion under pressure to enhance overall system efficiency**
- **Vinyl strain relief guard on both ends of hose to improve life and durability on all models.**

▼ *To prevent back pressure and to increase cylinder retraction speed, when using long hoses with single-acting cylinders, the Enerpac HC7300-Series of hoses with increased internal diameter is the best choice.*



▼ **Hose End Couplings**

¼" NPTF	
⅜" NPTF	
A604	
A630	
AH604	
AH630	
C604	
CH604	

High Pressure Hydraulic Hoses

Hose Oil Capacity

When using greater hose lengths, it is sometimes necessary to fill the pump reservoir after filling the hoses.

To determine the hose oil capacity, use the following:
For 6,4 mm inside diameter hoses:
Capacity (cm^3) = 32,1699 x Length (m)
For 9,7 mm inside diameter hoses:
Capacity (cm^3) = 73,8981 x Length (m)

H700 Series



Inside Diameter:
6,4 - 9,7 mm

Length:
0,6 - 15 m

Maximum Operating Pressure:
700 bar

Internal Diameter (mm)	Hose End Assemblies and Couplers * End one	End two	Hose Length (m)	Model Number	(kg)
6,4	¼" NPTF		–	–	–
			–	–	–
		A630	1,8	HB7206QB	1,1
			–	–	–
		CH604	1,8	HC7206Q	1,0
	⅜" NPTF	⅜" NPTF	0,6	H7202	0,5
			0,9	H7203	0,7
			1,8	H7206	0,9
			3,0	H7210	1,4
			6,1	H7220	2,8
			9,1	H7230	4,5
			15	H7250	7,0
		A604	–	–	–
			1,8	HA7206B	1,1
			–	–	–
		AH604	–	–	–
			–	–	–
			1,8	HA7206	1,0
			3,0	HA7210	1,5
		AH630	1,8	HB7206	1,0
		C604	0,9	HC7203B	1,0
			1,8	HC7206B	1,3
			3,0	HC7210B	1,8
		CH604	0,9	HC7203	0,8
			1,8	HC7206	1,0
			3,0	HC7210	1,5
			6,1	HC7220	2,9
	CH604	CH604	1,8	HC7206C	1,1
			6,1	HC7220C	3,0
			15	HC7250C	7,0
9,7	⅜" NPTF	⅜" NPTF	1,8	H7306	1,6
			3,0	H7310	2,4
			6,1	H7320	4,5
			9,1	H7330	7,3
			15	H7350	11,5
		CH604	1,8	HC7306	1,7
			3,0	HC7310	2,5
			6,1	HC7320	5,1

* For technical information on couplers see next page.



GA45GC Gauge Adaptor

Protect yourself from system overloading by simply ordering one part number for a pre-assembled gauge, adaptor block and coupler.

Page: 142



Torque Wrench Hoses

Use Enerpac twin safety hoses with double-acting wrenches to ensure the integrity of your hydraulic system.

Page: 249



Fittings

For additional fittings see the fitting page of the System Components section.

Page: 133



Premium Hydraulic Oil

Use only genuine Enerpac hydraulic oil. Wrong fluid can destroy seals and pump and will render your warranty null and void your guarantee.

Page: 132

A, C, F, T-Series, Hydraulic Couplers

ENERPAC

▼ Shown: **FH604, FR400, AR630, C604, AH604, AR400**



3/8" High Flow Couplers

- **Standard equipment on most Enerpac cylinders**
- **Recommended for use on all Enerpac pumps and cylinders where space and porting permits**
- **Includes "2-in-1" dust cap for use on male and female couplers.**

3/8" High Pressure 'Flush-face' Couplers

- **Featuring "Push-to-connect" operation, to guarantee good connection every time**
- **Flush-face, zero-leak operation for minimal spillage and reduced pressure drop**
- **HTMA * recognized for safety and performance**
- **Will not interchange with low pressure couplers.**

3/8" Regular Spee-D-Couplers®

- **For medium duty applications with hand pumps**
- **Includes female aluminium dust cap.**

1/4" Regular Couplers

- **For use with small cylinders and hand pumps**
- **Includes female aluminium dust cap.**

1/4" Spin-on Torque Wrench Couplers

- **For use with 700 bar S, W, RSL, DSX and HMT-Series torque wrenches, THQ-Series hoses and 700 bar torque wrench pumps.**

* Hydraulic Tool Manufacturers Association.

Quick Connection of Hydraulic Lines

Thread sealer

To seal NPTF threads use one of the new anaerobic thread sealers or Teflon paste. When using Teflon Tape, apply the tape one thread from the end of a fitting to prevent it from winding up in the hydraulic system.

WARNING!

Couplers should be pressurized only when completely connected and should not be coupled or uncoupled when pressurized.

More safety instructions in our 'Yellow Pages'.

Page: 396

F-Series

Flush-faced couplers provide reduced pressure drop versus other types and are preferred in dirty, grimy construction and mining environments due to easy clean, non-dirt trapping faces.

▼ *With the use of Enerpac high flow couplers, hoses are easily installed for multiple hydraulic line connections in this 34 points PLC-controlled lifting system.*



Hydraulic Couplers



CT604 Safety Tool

Use the Enerpac CT604 to relieve hydraulic back pressure by safely bleeding the hydraulic coupler.

NOTE: For use on CR400 and CH604 700 bar High-Flow Couplers only

Minimize injuries from projectile parts and under-skin hydraulic fluid injections by eliminating unsafe coupler bleeding practices. The CT604 is Enerpac-engineering safe for use at 700 bar.

A, C, F, T Series



Maximum Flow Capacity:
7,6 - 40,0 l/min

Thread:
¼" - ⅜" NPTF

Maximum Operating Pressure:
700 bar

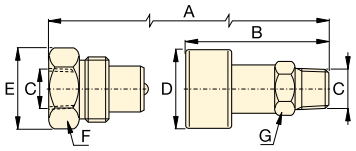

C604

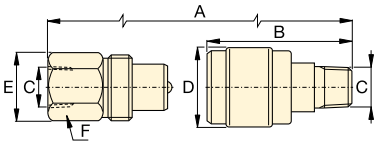

A604
A630

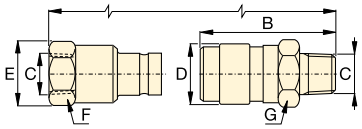

F604

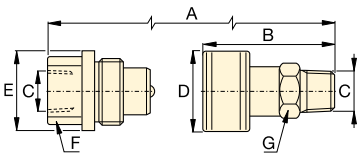

T630



Metal Dust Caps

Steel dust caps are available for the C604 series couplers.
Order model number:

CD411M for female half
CD415M for male half

Maximum Flow Capacity (l/min)	Coupler Type	Model Numbers			Dimensions (mm)							Dust Cap(s) Modelnr.
		Complete Set	Female Half	Male Half	A*	B	C	D	E	F	G	
35	700 bar High-Flow Coupler 	C604	CR400	CH604	83	64	⅜" NPTF	35	36	32	25	(2x) CD411
40	700 bar Flush-Face coupler 	F604	FR400	FH604	111	72	⅜" NPTF	31	31	27	29	–
7,6	700 bar Regular Spee-D-Coupler© 	A604	AR400	AH604	77	42	⅜" NPTF	28	26	23	19	Z410 female only
7,6	700 bar Regular Coupler 	A630	AR630	AH630	66	35	¼" NPTF	22	20	19	15	Z640 female only
11,4	700 bar Spin-on Coupler 	T630	TR630	TH630	73	60	¼" NPTF	29	29	19	21	–

* Value A is total length when male and female half are connected.

Hydraulic Oil, Manifolds and Fittings

ENERPAC

▼ Shown: **HF95T, HF95X, HF95Y**



The Genuine Range

- **Maximum pump volumetric efficiency**
- **Maximum internal heat transfer**
- **Prevents pump cavitation**
- **Additives prevent rust, oxidation and sludge**
- **High viscosity index**
- **Maximum film protective lubricity.**

Hydraulic Oil

Contents	Model Number	
1 litre	**HF95X**	Use only genuine Enerpac Hydraulic Oil. The use of any other fluid will render your Enerpac warranty null and void.
5 litres	**HF95Y**	
20 litres	**HF95T**	

▼ OIL SPECIFICATION CHART

Viscocity Index	100 min
Viscocity (cSt @ 40 ˚C)	32
API Gravity	31-33
Density (cSt @ 15 ˚C)	875
Flash point	204 ˚C
Pour point	-32 ˚C
Colour	Blue
Working Temperature Range	0 - 60 ˚C
Ideal working temperature	40 ˚C

700 bar Manifolds

Description		Model Number	Dimensions (mm)
7-port Manifold, short		**A64**	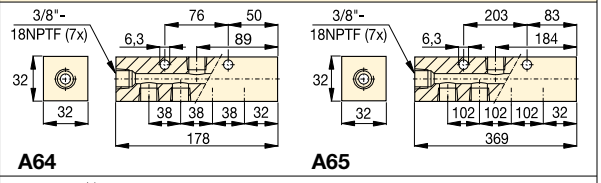
7-port Manifold, long allows direct mounting of control valves to the manifold.		**A65**	
6-port Manifold, hexagon Plugs furnished for all ports ⅜"-18 NPTF.		**A66**	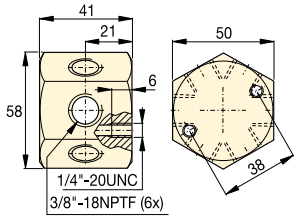
Control Manifolds * For control of two or four single-acting cylinders simultaneously. **AM21** with 5 ports ⅜"NPTF. **AM41** with 7 ports ⅜"NPTF.		**AM21**	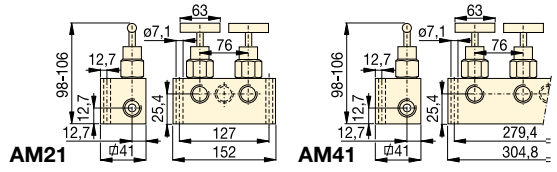
		AM41	

* See page 142 for AMGC-Series 4-way manifold assembly complete with gauges.

Hydraulic Oil, Manifolds and Fittings



3/8" Swivel Connector

360 degree swivel coupler for optimal orientation of the hydraulic connection on cylinders, pumps and hoses.
Order Model Number. **XSC1**

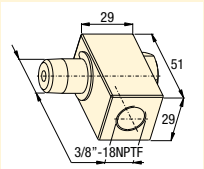

A, AM
BFZ
FZ
HF
Series



700 bar Fittings

		Model Number	Dimensions (mm) A	B	C	D	
Street Elbow From: ⅜"-NPTF Male To: ⅜"-NPTF Female		**FZ1616**	23	33	⅜"-18 NPTF	⅜"-18 NPTF	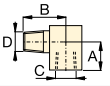
Reducing Connector From: ⅜"-NPTF Female To: ¼"-NPTF Female		**FZ1615**	28	25	⅜"-18 NPTF	¼"-18 NPTF	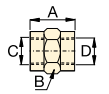
From: ½"-NPTF Female To: ⅜"-NPTF Female		**FZ1625**	47	29	½"-14 NPTF	⅜"-18 NPTF	
Hexagon Nipple From: To: ¼"-NPTF ¼"-NPTF ⅜"-NPTF ⅜"-NPTF ⅜"-NPTF ⅜"-NPTF		**FZ1608**	38	16	¼"-18 NPTF	¼"-18 NPTF	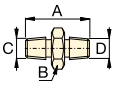
		FZ1619	51	19	⅜"-18 NPTF	⅜"-18 NPTF	
		FZ1617	37	19	⅜"-18 NPTF	⅜"-18 NPTF	
Coupling From: To: ⅜"-NPTF ⅜"-NPTF ¼"-NPTF ¼"-NPTF		**FZ1614**	29	23	⅜"-18 NPTF	⅜"-18 NPTF	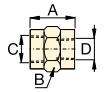
		FZ1605	29	19	¼"-18 NPTF	¼"-18 NPTF	
Cross From: ⅜"-NPTF Female To: ⅜"-NPTF Female		**FZ1613**	45	25	⅜"-18 NPTF	–	
Tee From: To: ⅜"-NPTF ⅜"-NPTF ¼"-NPTF ¼"-NPTF		**FZ1612**	45	25	⅜"-18 NPTF	–	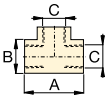
		FZ1637	45	24	¼"-18 NPTF	–	
Street Tee From: ⅜"-NPTF Female To: ⅜"-NPTF Male		**BFZ16312**	56	26	⅜"-18 NPTF	⅜"-18 NPTF	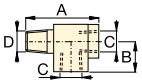
Elbow From: To: ⅜"-NPTF ⅜"-NPTF ¼"-NPTF ¼"-NPTF		**FZ1610**	33	20	⅜"-18 NPTF	–	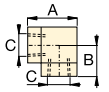
		FZ1638	36	24	¼"-18 NPTF	–	
Reducer From: To: ⅜"-NPTF ¼"-NPTF ¼"-NPTF ½"-NPTF ⅜"-NPTF G¼"		**FZ1630**	19	19	¼"-18 NPTF	⅜"-18 NPTF	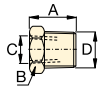
		BFZ1630	28	22	¼"-18 NPTF	½"-14 NPTF	
		BFZ16301	19	19	G¼"	⅜"-18 NPTF	
Adaptor From: To: G¼" ¼"-NPTF G¼" ⅛"-NPTF G⅜" ¼"-NPTF G⅜" ⅜"-NPTF		**BFZ-16411**	35	19	¼"-18 NPTF	G¼"	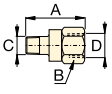
		BFZ-16421	31	19	⅛"-27 NPTF	G¼"	
		BFZ-16323	43	24	¼"-18 NPTF	G⅜"	
		BFZ-16324	43	24	⅜"-18 NPTF	G⅜"	
Adaptor From: To: ¼"-NPTF ⅜"-NPTF ¼"-NPTF ⅛"-NPTF ½"-NPTF ⅜"-NPTF		**FZ1055**	44	23	¼"-18 NPTF	⅜"-18 NPTF	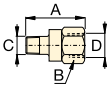
		FZ1642	30	19	⅛"-27 NPTF	¼"-18 NPTF	
		FZ1634	42	28	⅜"-18 NPTF	½"-18 NPTF	
Swivel Fitting From: ⅜"-NPTF Male To: ⅜"-NPSM Female		**FZ1660**	40	22	⅜"-18 NPTF	⅜"-18 NPSM	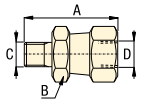

SFM-Series, Split-Flow Manifolds

ENERPAC

▼ Shown from left to right: **SFM41, SFM42 Split-Flow Manifolds**



- **Split-Flow Manifolds improve safety, precision and control in lifting and lowering operations**
- **Pressure gauge, flow control valve in each outlet port; CR400 couplers installed in each inlet and outlet port**
- **Regulates both advance and retract speeds: lifting and lowering**
- **1 inlet, 4 outlets. Maximum of 4 cylinders per manifold: SFM41 for single-acting cylinders, SFM42 for double-acting cylinders**
- **Minimum pump oil flow: 1,40 l/min to deliver 0,15 - 0,25 l/min per cylinder**
- **Maximum difference among outlets: 10% of the stroke (in 150 mm)**
- **More cylinders can be controlled simultaneously by connecting several SFM-models parallel.**

Improved safety on basic simultaneous lifting applications



Pressure Gauges G2535L

Glycerine filled pressure gauges are installed in each outlet pressure line to monitor the pressure of each cylinder.



Optimum Performance

Minimum pump oil flow must be 1,40 l/min to deliver 0,15 - 0,25 l/min per cylinder. Enerpac recommends to use Z-Class electric or gasoline pumps from the ZE5 and ZG-Series.



SFP-Series, Split-Flow Pumps

When a higher accuracy is required across cylinder strokes in a multi-point lifting or lowering application Enerpac recommends to use the SFP-Series Split-Flow Pumps.

Contact Enerpac!

Contact the Enerpac office nearest to you for advice and technical assistance in the layout of your ideal Lifting System or visit us at: www.enerpac.com. Or ask Enerpac for assistance: **enerpac.com/contact-us**



◀ *To repair the foundation, silos needed to be lifted, levelled and structurally supported. Powered by a ZE5-Series electric pump the split-flow manifold used to operate multiple hydraulic cylinders.*

Split-Flow Manifolds

Split-Flow Manifolds

The SFM-Series offer an economical solution for basic multi-point simultaneous lifting applications and enables a single operator to control a maximum of 4 lifting points from one manifold.

The Split-Flow Manifolds are equipped with pressure compensated flow control valves, to preset and limit advance and retract speed of each cylinder, allowing to move up to 4 cylinders simultaneously.

The SFM-Series provide more lifting and lowering control compared to AM-Series Control Manifolds. See flow control valve adjustments table below.

Minimum pump oil flow must be 1,40 l/min (ZE5-Series pumps) to deliver 0,15 - 0,25 l/min per cylinder. Several SFM-models can be connected parallel to the same pump to allow simultaneous operation of 8, 12 or 16 cylinders.

Higher flow pumps are required to achieve faster advance speeds. A 20% higher oil flow must be considered for a proper speed compensation.
Example : when using 4 cylinders: if oil flow of 0,45 l/min is required per cylinder, the pump oil flow must be:
4 x 0,45 = 1,8 l/min + 20% = 2,16 l/min.

The maximum stroke deviation between the cylinders can reach up to 10% (in 150 mm) depending on the cylinder pressure.
Oil flow adjustment is also possible during cylinder operation by fine tuning using the flow control valves.

All cylinders connected to the SFM-manifold must have the same capacity (effective area). Both advance and retract speed are limited by the same valves. Use hoses of the same lengths to improve the accuracy of the hydraulic system. Improved precision when difference of pressures among the cylinders is within 200 bar.

SFM Series



Inlet Connection:
1x power pump

Outlet Connections:
Max. 4 cylinders

Minimum Pump Flow Required:
1,40 l/min

Maximum Operating Pressure:
700 bar



Load Holding

Use **V66 check valves** for load holding applications with single-acting cylinders.

Page: 145



Hoses

Enerpac offers a complete line of high-quality hydraulic hoses. To ensure the integrity of your system, specify only Enerpac hydraulic hoses. Enerpac recommends to use hoses of the same lengths between the SFM and cylinders to improve system accuracy.



Flow Control Valves

The Split-Flow Manifold has pressure compensated flow control valves installed in each outlet line. The oil flow from the SFM-Manifold to each cylinder can be adjusted by turning the knob on the valve.

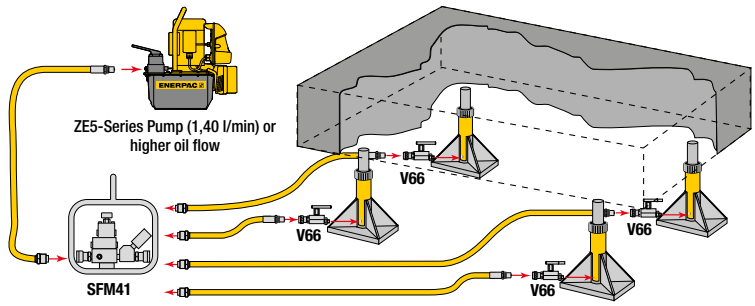

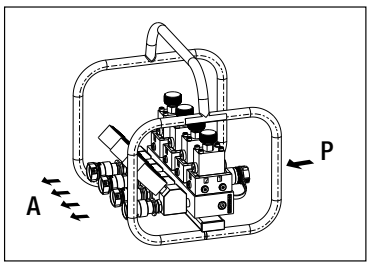

SFM41

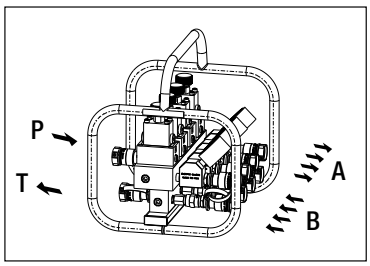

SFM42

▼ SPLIT-FLOW MANIFOLDS

For use with cylinders	Model Number	Minimum oil flow to each cylinder (l/min)	Female couplers included	Dimensions L x W x H (mm)	(kg)
4x single-acting	**SFM41**	0,15	CR400	370 x 335 x 375	24
4x double-acting	**SFM42**	0,15	CR400	370 x 335 x 375	30

Flow Control Valve Adjustments

Number of Knob Turns	Oil Flow (l/min)	Number of Knob Turns	Oil Flow (l/min)
½	0,15	3	1,9
1	0,45	3½	3,6
1½	0,75	4	5,6
2	0,90	4½	8,3
2½	1,3	Open	10,3

GF & GP-Series, Force & Pressure Gauges

ENERPAC

▼ Shown from left to right: **GF230B, GF835B, GP10S**



- **GF-series gauges: calibrated with dual scale reading for pressure (bar) and force (kN)**
- **GF-series gauges: all pressure sensing parts are sealed and dampened by glycerine for long life**
- **GP-series gauges: calibrated with dual scale reading for pressure in bar and psi**
- **Excellent readability: gauge face dimensions 100 mm**
- **Fast, easy installation**
- **Stainless steel gauge cases for corrosion resistance.**

▼ *A GP10S gauge is used on this press to check the hydraulic pressure required to bend flat steel bar.*



Visual Reference for System Pressure and Force



Auto-Damper Valve V10

For automatic control of gauge fluctuations, the V10 Auto-Damper Valve controls the movement of the gauge needle by restricting oil flow in and out of the gauge. No adjustments needed.

Page: 144



Snubber Valve V91

Infinitely adjustable for metering oil out of a gauge. The V91 Snubber Valve is also suitable as a shut-off valve to protect the gauge during high cycle applications.

Page: 144

	Used With
	**All cylinders**
	All cylinders
	5 ton RC, RSM-cylinders
	10 ton RC, RCS, RSM-cylinders
	All 25 ton RC-cylinders
	All 50 ton RC, RR-cylinders
	13 ton RCH-Series
	RCS201, 302
	RCS502, 1002
	RCH202, 302, 603
	25, 30, 50 ton RC, RCS, RSM, RR
	75 and 95 ton RC, RR-cylinders
	150 and 200 ton RR-cylinders
	**10 ton VLP Presses**
	25 ton XLP Presses
	50 ton XLP, BPR Presses
	100 ton VLP, BPR Presses
	200 ton VLP, BPR Presses

Hydraulic Force & Pressure Gauges



Maximum Indicator Pointer

Indicator retains peak readings of pressure or force generated by the system.

Can easily be installed on GP and H-Series gauges. Order model nr: **BSA881**.

Pressure Gauges

To measure the input pressure into cylinders or high pressure systems. Also for all testing applications.

Force Gauges

To measure external load supported by a cylinder or jack in kN. For pressing parts together under pre-determined loads, weighing, testing, etc.

GP-Series are dry gauges.
GF-Series are glycerine filled gauges.

GF GP Series



Pressure Range:
0 - 1000 bar

Force Range:
0 - 2000 kN

Gauge Face Diameter:
100 mm

Accuracy, % of full scale:
± 1%

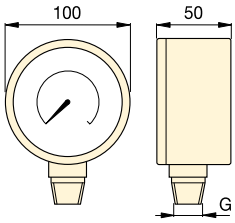

GP-serie

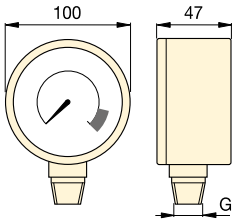

GF-serie

Gauge Type and Calibration				Units per Division	Model Number *	Thread G	Gauge Adaptor		
							 143		
							Required		
bar	psi	bar	kN				GA1	GA2	GA3
0-700	0-10.000	–	–	10 bar, 100 psi	**GP10S**	½" NPTF	●	●	
0-1000	0-15.000	–	–	10 bar, 200 psi	**GP15S**	½" NPTF	●	●	
–	–	0-700	0-45	10 bar, 0,5 kN	**GF5B**	½" NPTF	●	●	
–	–	0-700	0-100	10 bar, 1 kN	**GF10B**	½" NPTF	●	●	
–	–	0-700	0-232	10 bar, 2 kN	**GF20B**	½" NPTF	●	●	
–	–	0-700	0-500	10 bar, 5 kN	**GF50B**	½" NPTF	●	●	
–	–	0-700	0-124	10 bar, 1 kN	**GF120B**	½" NPTF	●	●	
–	–	0-700	0-175/275	10 bar, 2 + 5 kN	**GF230B**	½" NPTF	●	●	
–	–	0-700	0-450/900	10 bar, 5 + 10 kN	**GF510B**	½" NPTF	●	●	
–	–	0-700	0-210/320/570	10 bar, 5 kN	**GF813B**	¼" NPTF			●
–	–	0-700	0-232/300/500	10 bar, 5 kN	**GF835B**	¼" NPTF			●
–	–	0-700	0-720/930	10 bar, 10 kN	**GF871B**	¼" NPTF			●
–	–	0-700	0-1400/2000	10 bar, 25 kN	**GF200B**	¼" NPTF			●
–	–	0-700	0-100	10 bar, 1 kN	**GF10B**	½" NPTF	●	●	
–	–	0-700	0-232	10 bar, 2 kN	**GF20B**	½" NPTF	●	●	
–	–	0-700	0-500	10 bar, 5 kN	**GF50B**	½" NPTF	●	●	
–	–	0-700	0-720/930	10 bar, 10 kN	**GF871B**	¼" NPTF			●
–	–	0-700	0-1400/2000	10 bar, 25 kN	**GF200B**	¼" NPTF			●

* GF-Series Force gauges with imperial scale reading (psi, lbs) are available by changing the suffix 'B' into 'P'.

G, H-Series, Hydraulic Pressure Gauges

ENERPAC

▼ Shown from left to right: **H4049L, G2534R, G4089L, G2535L, G4040L**



Visual Reference of System Pressure

Glycerine Filled (G-Series)

- **Dual scale reading calibrated in bar and psi**
- **All pressure sensing parts sealed and dampened by glycerine for long life**
- **Includes safety blow-out disk and pressure equalizing membrane**
- **Gauge snubbers or needle valves recommended for high cycle applications.**

High Cycle Dry Gauges (H-Series)

- **Dual scale reading calibrated in bar and psi**
- **Ideal for use in many applications, specifically for high cycle and harsh environments**
- **Gauge snubbers or needle valves recommended to shut off gauge when not in use.**

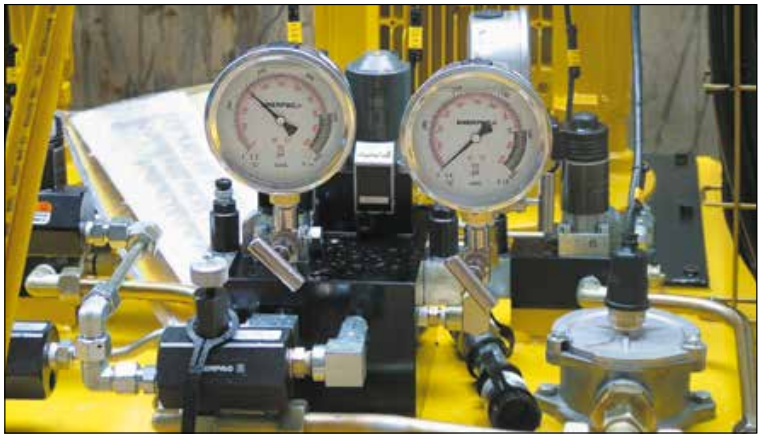

◀ *When lifting or pressing, always use a gauge. A gauge is your 'window' to the system. It lets you see what's going on.*



Gauge adaptor assembly

45° Angled gauge adaptor **GA45GC** improves safe working conditions.

Page: 142



Gauge Adaptor

For easy gauge installation into almost any system, Enerpac offers a complete line of gauge adaptors.

Page: 143



Snubber Valve V91

Infinitely adjustable for metering oil out of a gauge. The V91 Snubber Valve is also suitable as a shut-off valve to protect the gauge during high cycle applications.

Page: 144

Hydraulic Pressure Gauges

CAUTION! When lifting or pressing, always use a gauge

Do not override factory setting of relief valves. Always use a gauge to check system pressure. A gauge is your 'window' to the system. It lets you see what's going on. See our Safety Instructions.

Page: 396

G H Series



Pressure Range:
0 - 1000 bar

Face Diameter:
63 - 100 mm

Accuracy, % of full scale:
± 1,0 - 1,5%

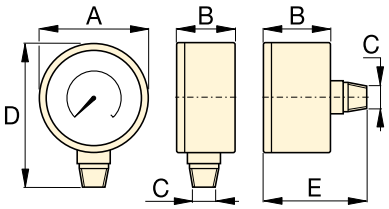

Size (mm)	Connection	Dimensions (mm)				
		A	B	C	D	E
63	Lower Mount	63	37	¼" NPTF	84	–
63	Center Rear	63	37	¼" NPTF	–	63
100	Lower Mount	100	29	¼" NPTF	121	–
100	Lower Mount	100	49	½" NPTF	136	–

Note: dimensions for reference only.



Maximum Indicator Pointer

Indicator retains peak readings of pressure or force generated by the system.

Can easily be installed on GP and H-Series ø 100 mm gauges. Order model nr: **BSA881**.

▼ SELECTION CHART

Gauge Series	Pressure Range		Model Number				Major Graduation		Minor Graduation		Major Graduation		Minor Graduation	
			ø 63 ¼" NPTF Lower Mount	ø 63 ¼" NPTF Center Rear	ø 100 ¼" NPTF Lower Mount	ø 100 ½" NPTF Lower Mount	bar				psi			
	(bar)	(psi)	Accuracy: ± 1,5 %		Accuracy: ± 1,0 %		ø 63	ø 100	ø 63	ø 100	ø 63	ø 100	ø 63	ø 100
G-Series	0-7	0-100	G2509L	–	–	–	1	–	0,01	–	10	–	2	–
	0-11	0-160	G2510L	–	–	–	1	–	0,02	–	10	–	2	–
	0-14	0-200	G2511L	–	–	–	1	–	0,02	–	50	–	5	–
	0-20	0-300	G2512L	–	–	–	5	–	0,50	–	50	–	5	–
	0-40	0-600	G2513L	–	–	–	10	–	1	–	100	–	10	–
	0-70	0-1.000	G2514L	G2531R	–	–	10	–	1	–	100	–	20	–
	0-140	0-2.000	G2515L	–	–	–	10	–	5	–	500	–	50	–
	0-200	0-3.000	G2516L	–	–	–	50	–	5	–	500	–	50	–
	0-400	0-6.000	G2517L	G2534R	–	–	100	–	10	–	1000	–	100	–
	0-700	0-10.000	G2535L	G2537R	G4088L	G4039L	100	100	10	10	2000	1000	200	100
	0-1000	0-15.000	G2536L	G2538R	G4089L	G4040L	100	100	20	20	3000	3000	200	200
H-Series	0-700	0-10.000	–	–	H4049L	H4071L	–	100	–	10	–	1000	–	100

T-Series, Test System Gauges

ENERPAC

▼ Gauge shown: **T6003L**



T
Series

Pressure Range:
0 - 3500 bar

Face Diameter:
162 - 192 mm

Accuracy, % of full scale:
± 0,5 - 1,5%

- **Dual scale reading calibrated in bar and psi**
- **All gauges have spring-loaded backs with rubber blow-out plugs to protect case assembly in case of over-pressurization**
- **Integral maximum indicator pointer standard included**
- **2800 and 3500 bar models include flange mounting**
- **½" NPTF versions are made of high strength alloy steel**
- **0.25" cone models are made of 316 stainless steel, with 403 stainless steel on 2800 and 3500 bar models.**



Cone Mount Gauge Adaptor
Contains fittings to connect ¼" cone fitting gauge to ⅜" cone system. Kit includes 43-301 tee, 43-704 gauge adaptor and 45-116 tubing. Order model number: **83-011**.

Page: 85



Cone Mount Gauge Connector
For connecting gauges with 0.25" cone fitting directly to model number **11-100** or **11-400** pump (page 84). May be used with other 0.25" cone systems
Order model number: **43-704**

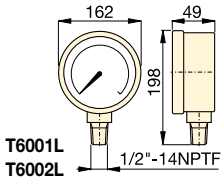

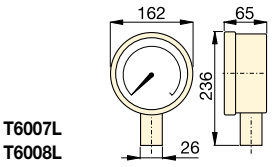

▼ *An Enerpac P2282 hand pump equipped with a T6011L test system gauge is used for proof pressure testing of hydraulic valves.*



Pressure Range (bar)	Pressure Range (psi)	Model Number Alloy Steel ½" NPTF	Model Number Stainless Steel 0,25 cone	Number Intervals (bar)	Graduation Intervals (bar)	Number Intervals (psi)	Graduation Intervals (psi)
0-70 [1]	0-1000	**T6001L**	–	10	1	100	10
0-350 [1]	0-5000	**T6002L**	–	50	5	500	50
0-700 [1]	0-10.000	**T6003L**	**T6007L**	100	10	1.000	100
0-1400 [1]	0-20.000	–	**T6008L**	200	20	1.000	100
0-2800 [2]	0-40.000	–	**T6010L**	500	20	5.000	200
0-3500 [2]	0-50.000	–	**T6011L**	500	50	5.000	200

[1] Acccuracy ± 0,5%
[2] Acccuracy ± 1,5%

Digital Hydraulic Pressure Gauge

▼ Gauge shown: **DGR2**



DGR
Series

Pressure Range:
0 - 1380 bar

Voltage:
3 Volt (battery)

Accuracy, % of full scale:
± 0,25%

- **Rated for system pressure up to 1380 bar**
- **Displays in bar, psi, MPa and kg/cm²**
- **Zero reset - ensures that gauge reads actual pressure**
- **IP65 protection, UL listed, CE and RoHS compliant**
- **Batteries included, condition indicator on read-out**
- **Shut-off selectable – menu driven**
- **Back-lit readout allows easy reading in less than ideal lighting**
- **Protective cover included.**



Gauge Adaptor

For easy gauge installation into almost any system, Enerpac offers a complete line of gauge adaptors. Maximum operating pressure 700 bar.

Page: 143

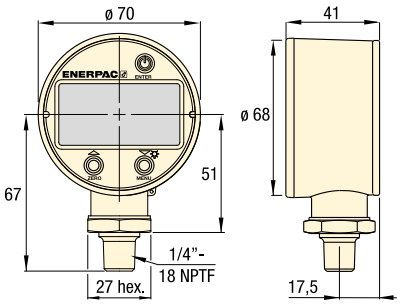

High Pressure Rating (bar)		High Pressure Rating (MPa)		Model Number	High Pressure Rating (psi)		High Pressure Rating (kg/cm²)	
Range	Resolution	Range	Resolution		Range	Resolution	Range	Resolution
0-1380	0,1	0-140	0,01	**DGR2**	0-20.000	1	0-1400	0,1

Weight: 0,23 kg.

▼ *Greater accuracy and easier to read: enhance your ability to monitor and control hydraulic system pressure up to 1380 bar.*



Gauge Adaptor Assembly

ENERPAC

▼ Shown: **GA45GC**



GA45GC, AMGC Series

Connection 1:
3/8" NPTF male

Connection 2:
CR400 coupler

Maximum Operating Pressure:
700 bar

- **45° angled gauge improves visibility**
- **Slim and narrow design**
- **Easy to fit in a broad range of systems**
- **Maximize controlled load movement**
- **Glycerin dampened gauge with dual scale**
- **Enerpac High-Flow female coupler CR400.**



4-Way Manifold assembly complete with gauges

Offering ease of portability and convenience with an ergonomic robust design, ready for use. Enerpac's CR400 female couplers on all ports allow the manifold to be quickly connected to up to 4 cylinders. Glycerine filled, 700 bar gauges allow operators to work safely. All protected by the robust protection frame.

Manifold Type (Used for cylinders)	Model Number
4x Single-acting	**AMGC41**
4x Double-acting	**AMGC42**



Power Box

Portable tool box with hand pump, **GA45GC** gauge adaptor assembly, hose and RC, RSM, RCS-cylinder, WR5 wedgie or LW16-lifting wedge.

Page: 65

▼ *The Gauge Adaptor Assembly is the window to your system; allows easy reading of the pressure for safe operation.*



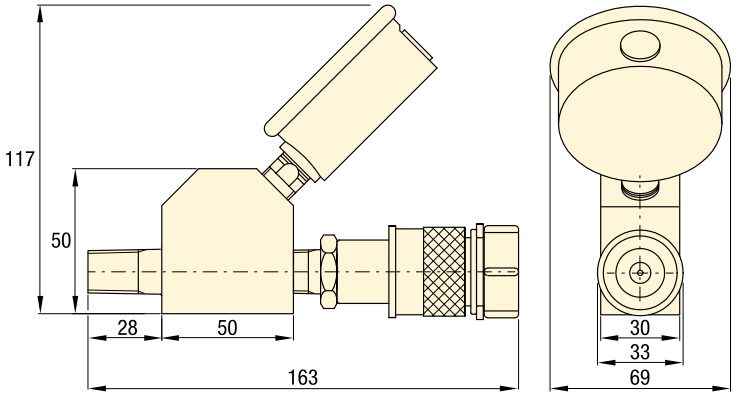

Model Number	Gauge Port (1/4" NPTF)	Male End (NPTF)	Female End (3/8" NPTF)	Gauge Range (bar)	Gauge Range (psi)
GA45GC	G2535L	⅜" -18	CR400	0 - 700	0 - 10.000

Gauge Accessories

▼ Shown from left to right: **GA3, V91, GA1, GA2, GA4, NV251, GA918**



GA, NV, V Series

Maximum Operating Pressure:
700 bar

▼ *A gauge is easily installed into your hydraulic system using a gauge adaptor.*





Gauge Adaptors (GA-Series)

- For easy mounting of a pressure gauge onto your system
- Male end screws into pump or cylinder port, female end accepts hose or coupler, 3rd port is for gauge connection
- GA918 provides for swivel connection.

Model Number	Gauge Port (NPTF)	Male End (NPTF)	Female End (NPTF)	Dimensions (mm) A	B	C	D	E	F
GA1	½"	⅜"	⅜"	71	31	½" NPTF	⅜" NPTF	⅜" NPTF	32
GA2	½"	⅜"		155	35	½" NPTF	⅜" NPTF	⅜" NPTF	32
GA3	¼"	⅜"		133	35	¼" NPTF	⅜" NPTF	⅜" NPTF	32
GA4	½"	¼"		111	35	½" NPTF	¼" NPTF	⅜" NPTF	32

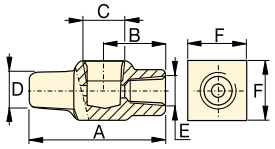

GA1

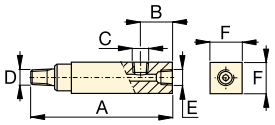

GA2, GA3, GA4



Swivel Adaptor (GA918)

- Simplifies gauge installation and reading.

Model Number	Dimensions (mm) A	B	C	D	E	S	S1
GA918	117	43	½" NPTF	28,5	½" NPTF	29	38

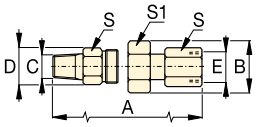

GA918



Needle Valves (V- and NV-Series)

- Both NV251 and V91 provide positive shut-off
- 316 stainless steel stem, 24 threads/in (NV251).

Model Number	Orifice (mm)	Thread Size	Dimensions (mm) A	B	C	D	E	F	H
NV251	4,3	¼" NPTF	57	29	¼" NPTF	57	46	19	19
V91	4,8	½" NPTF	89	32	½" NPTF	64	32	37	37

NV251

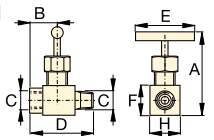

V91

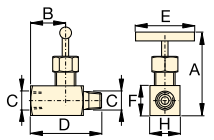

Tel: +45 63 12 83 00 | Email: ps@hymatik.com | www.hymatik.com | Hvidkaervej 27a, DK-5250 Odense SV, Denmark

V-Series, Pressure and Flow Control Valves

ENERPAC

▼ From left to right: **V152, V66, V82, V161, V42, V17**



Your Hydraulic Control Solution

Valve Applications
To see these valves used in typical hydraulic circuits, please see our 'Yellow Pages'.

Page: 400

- **All valves are rated for 700 bar operating pressure**
- **All valves feature NPTF porting to insure against leakage at rated pressure**
- **All valves are painted, coated, or plated for corrosion resistance**
- **Viton® seals (in V66NV and V152NV) for high temperature applications, nickel-plated for maximum corrosion resistance.**

▼ *The V152 pressure relief valve limits the pressure or force developed in the hydraulic system.*



Valve dimensions in mm

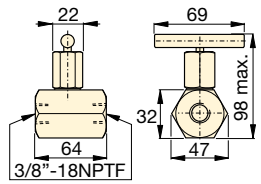

V82

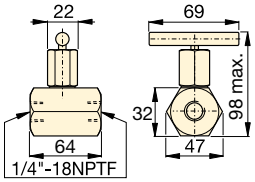

V182

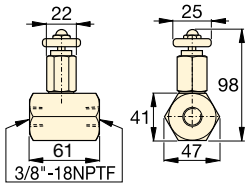

V8F

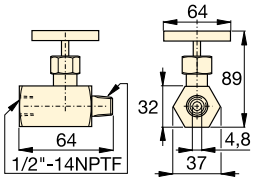

V91

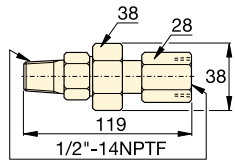

V10

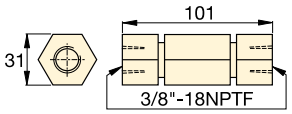

V17

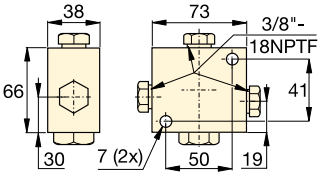

V42

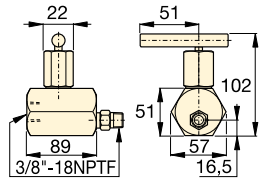

V66, V66NV

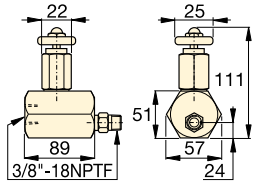

V66F

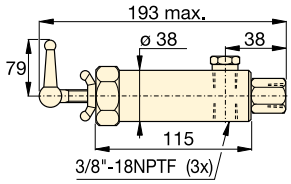

V152, V152NV

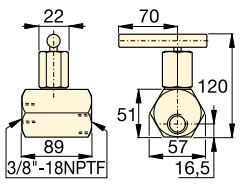

V161

Pressure and Flow Control Valves



Control Manifolds

For two or four port manifolds with integral flow control valves, see the manifold page of the System Components section.

Page: 132



Fittings

For additional fittings see the fitting page of the System Components section in this catalogue.

Page: 133

V Series



Maximum Operating Pressure:
700 bar

Valve Type and Model Number		Description		Hydraulic Symbol
Needle Valve **V82** **V182** **V8F**		**V82**: To control cylinder speed. Can also be used as shutoff valve for temporary load holding. ⅜" NPTF ports, nickle plated. **V182**: Same as V82, but with ¼" NPTF female ports, nickle plated.	Also suitable for gauge snubbing (also V82). **V8F**: Like V82, but with very fine metering for precise flow control 0,16 - 14,7 l/min at 275 bar. **Not recommended as shutoff valve.**	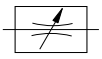
Snubber Valve **V91**		**V91**: Infinitely adjustable for metering oil out of a gauge to prevent snapping of gauge pointer when load or pressure is suddenly released.	Also suitable as shutoff valve to protect the gauge during high cycling applications. ½" NPTF male and female threads for use with GA1, GA2 or GA4 gauge adaptors.	
Auto Damper® Valve **V10**		**V10**: To be used when gauge pressure must be monitored during high cycle applications. Creates a flow resistance when load is released suddenly.	No adjustments are necessary. ½" NPTF male and female threads for use with GA1, GA2 or GA4 gauge adaptors.	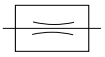
Check Valve **V17**		**V17**: Ruggedly built to resist shock and operate with low pressure drop. Closes smoothly without pounding. ⅜" NPTF female port.		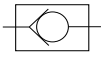
Pilot Operated Check Valve **V42**		**V42**: Can be mounted at the cylinder to hold the load in case of system pressure loss. Normally used with doubleacting cylinders where pilot port receives pressure from a Tee-fitting in the cylinder retract line.	⅜" NPTF female ports. Pilot presure ratio 14% (6,5:1).	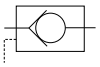
Manually Operated Check Valve **V66, V66NV *** **V66F**		**V66, V66NV**: For load holding applications with single and double acting cylinders. Valves allow oil to flow back to tank when cylinder retracts.	**V66NV** with Viton seals, nickelplated. **V66F:** Similar to V66, but with very fine metering capability for precise flow control. V66F is not designed for load holding.	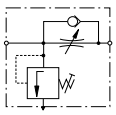
Pressure Relief Valve **V152** **V152NV ***		**V152**: Limits pressure developed by the pump in hydraulic circuit, thus limiting the force imposed on other components. Valve opens whenever preset pressure is reached.	To increase pressure setting, turn handle clockwise. Includes: • 0,9 m return line hose kit, • ± 3% repeatability, • 55 - 700 bar adjustment range.	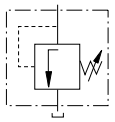
Sequence Valve **V161**		**V161**: To control oil flow to a secondary circuit. Flow is blocked until system pressure rises to the V161 setting. When this pressure level is reached, the V161 opens to allow flow to the secondary circuit.	A pressure differential is always maintained between the primary and secondary circuit. **Mininum operating pressure: 140 bar.**	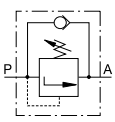

* See page 64 for more information about products for use in high temperature and extreme environment applications.

Tel: +45 63 12 83 00 | Email: ps@hymatik.com | www.hymatik.com | Hvidkaervej 27a, DK-5250 Odense SV, Denmark

Hydraulic Presses Section Overview

ENERPAC

Enerpac Hydraulic Presses are available in a variety of capacities and sizes. The press frames are designed for maximum strength and durability. Strong frames and powerful high-pressure hydraulics will provide years of dependable service in many applications.

Enerpac Presses are available in Bench, C-Frame, Arbor, Workshop and Roll-Frame models.

Available in capacities from 10 to 200 ton, each Enerpac press consists of three basic high quality components: press frame, power source and a cylinder.

Capacity ton (kN)	Press type and functions		Series	Page
10 (101)	Bench Presses	VLP		148 ▶
25 - 200 (232 - 1995)	Workshop Presses	XLP VLP		148 ▶
50 - 200 (498 - 1995)	Roll-Frame Presses	BPR		150 ▶
5 - 20 (45 - 178)	C-Clamp Presses	A		152 ▶
10 - 30 (101 - 295)	Arbor Presses	A		152 ▶
10 - 200 (101 - 1995)	Press Accessories	A, VB BSS IPL, XLP		154 ▶
900 - 90.000 kg	Tension Meters Load Cells	TM LH		155 ▶

IMPORTANT!

The pressframe of the workshop presses are exclusively designed for pressing operations, not for pulling. For pulling applications please contact Enerpac.

Page: 154



Custom Hydraulic Presses

With decades of experience and in-house capabilities look to Enerpac to help find solutions to your customization needs.

Next to our large range of standard workshop presses, Enerpac offers the possibility of customization. Because many customers have specific requirements, we offer turn-key project management, including design, engineering and manufacturing.
As the market leader, we listen to our customers and with our world wide experience we offer the best solutions, especially when safety is not negotiable. Whether a longer stroke, wider frame or complete new design is required, our custom product group has many years of experience in multiple industries to deliver a solution that meets or exceeds expectations.

Overview Custom Presses



▲ *Enerpac's hydraulic presses can be configured to fulfill a broad range of applications. Each press is designed and manufactured according to customer specifications and in cooperation with our engineering team.*

CUSTOMIZABLE FEATURES:

- Capacity
- Cylinder Stroke
- Pump Type
- Controls
- Guarding
- Daylight Dimensions

CONFIGURATIONS:

- Vertical and horizontal press
- Cylinders mounted in upper and lower bolsters
- Height built to customer specifications
- Daylight (vertical and horizontal) built to customer specifications



◀ *Fully Automated PLC-Controlled 1800-Ton, High-Accuracy Press. The pressing and heating cycle, during the production of magnetic acceleration coils, required high force and high- accuracy to ensure absolute quality*



◀ *600 Ton High-Accuracy Collar Press. For the production of accelerator coils, sheet metal needs to be formed into a specific shape and size.*



◀ *50 ton Workshop Press for maintenance jobs.*

XLP, VLP-Series, Bench & Workshop Presses

ENERPAC

▼ From left to right: **XLP256XA11G, XLP506XA12G, VLP106P142**



No Workshop can do without one



XA-Series Foot Pump

The XLP-press with XA-Series air powered foot pump: no need to fully lift up foot – rest bodyweight on heel, resulting in a handsfree and stable working position – safe and controlled press operation (see page 114 for XA-Series Pumps).



Gauges

All press models include a gauge and gauge adaptor, matching the press capacity.



Side-to-side cylinder movement

Cylinder can be positioned horizontally side-to-side on all XLP-Series presses.



Safety Cages & Screen

Optional safety cages and screen with polycarbonate glass for additional operator protection.

Page: 154

XLP-Series Presses

- **Multi-functional presses in kit form (50 and 75 ton presses)**
- **Easy grip forklift access on 50 and 75 ton presses**
- **Height adjustment of upper or lower bed with winch (50 & 75 ton)**
- **Width adjustment allows cylinder to move from side-to-side**
- **Pump options include XA-Series air-operated foot pump**
  - **pressure gauge integrated in pump for optimal control**
  - **suitable for delicate pressing jobs from variable oil flow.**

VLP-Series presses

- **Unique "Hydrajust" bed positioning device on 100 and 200 ton VLP-presses allows adjustment of the lower bed.**

▼ **SELECTION CHART**

Press Capacity ton (kN)	Maximum Daylight (mm) Vertical	Horizontal	Press Model Number	Power Source: Pump Type Man.	Elec.	Air	Valve Type Man.	Elec.	Pump Model Nr.	Page:	Cylinder:		Stroke (mm)	Cylinder Model Nr.	Page:
10 (101)	430	435	**VLP106P142**	●			●		P142	**76**	●		156	RC106	**6**
	430	435	**VLP106PAT1**			●	●		PATG1102N	**112**	●		156	RC106	**6**
25 (232)	1265	510	**XLP256P392**	●			●		P392	**76**	●		158	RC256	**6**
	1265	510	**XLP256XA11G**			●	●		XA11G	**114**	●		158	RC256	**6**
50 (498)	980	990	**XLP506P802 ***	●			●		P802	**78**	●		159	RC506	**6**
	980	990	**XLP506XA12G ***			●	●		XA12G	**114**	●		159	RC506	**6**
	980	990	**XLP506ZES ***		●			●	ZE4410SE-E050	**104**		●	156	RR506	**40**
	980	990	**XLP5013ZES ***		●			●	ZE4410SE-E050	**104**		●	334	RR5013	**40**
75 (718)	970	990	**XLP756XA12G ***			●	●		XA12G	**114**	●		156	RC756	**6**
100 (933)	989	990	**VLP1006ZES**		●			●	ZE5420SW-E050	**104**		●	168	RR1006	**40**
	989	990	**VLP10013ZES**		●			●	ZE5420SW-E050	**104**		●	333	RR10013	**40**
200 (1995)	1340	1220	**VLP20013ZES**		●			●	ZE6420SW	**104**		●	330	RR20013	**40**

* 50 and 75 ton XLP-Series presses can be ordered as factory assembled press frame. Add suffix "M" to press model number. Example: **XLP506XA12GM**.

= Single-Acting = Double-Acting

Bench and Workshop Presses

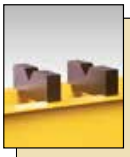

Optional V-Blocks

To facilitate positioning of pipes and bars, or placed upside-down, to serve as a convenient worktable. Featuring precise fit into the press bolster. Each model number includes two V-blocks.

To be used with press (ton)	V-Blocks Model Number
10	**VB10**
25	**VB25**
50	**VB501**
75, 100	**VB101**
200	**A200**

"Hydrajust" Bed Positioning

Allows vertical adjustment of the lower bed on 100 and 200 ton VLP presses.

IMPORTANT: The "Hydrajust" bed positioning is not designed to withstand full cylinder capacity, only to be used for bed adjustment.

Page: 154

XLP, VLP Series



Capacity:
10 - 200 ton

Maximum Daylight x Width:
1340 x 1220 mm

Maximum Operating Pressure:
700 bar

IMPORTANT!

The pressframe of the workshop presses are exclusively designed for pressing operations, not for pulling. For pulling applications please contact Enerpac.

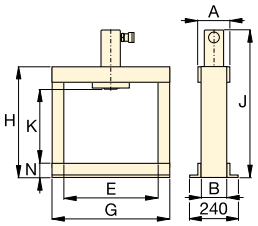

VLP 10 ton

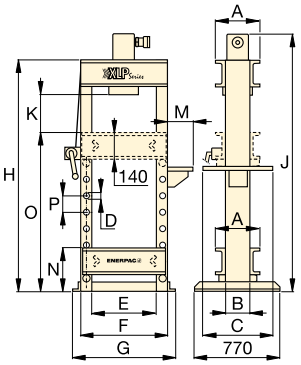

XLP 25 ton

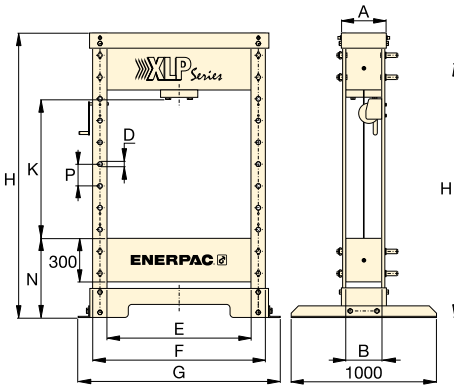

XLP 50 and 75 ton

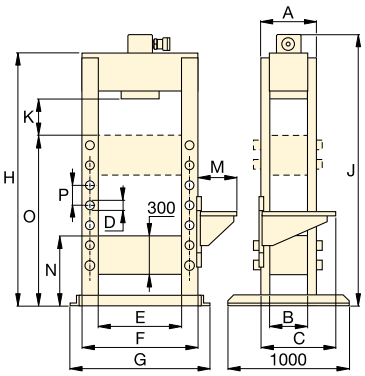

VLP 100 ton

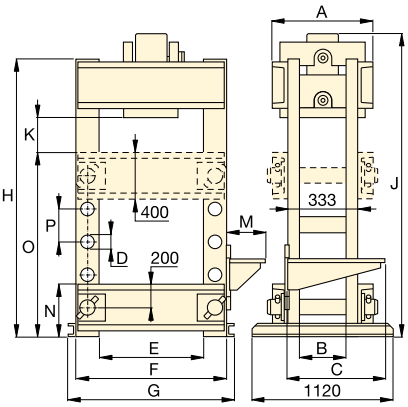

VLP 200 ton

Speed (mm/s) **		Dimensions (mm)															Press Model Number
Rapid Advance	Pressing	A	B	C	D	E	F	G	H	J	K	M	N	O	P	(kg)	
{2,5} **	{0,6} **	110	80	–	–	435	–	542	620	748	430	–	80	–	–	49	**VLP106P142**
10,0	1,8	110	80	–	–	435	–	542	620	748	430	–	80	–	–	54	**VLP106PAT1**
{3,4} **	{0,7} **	260	140	510	32	510	630	700	1622	1740	370-1265	140	212	1070	122	165	**XLP256P392**
10,0	1,3	260	140	610	32	510	630	700	1622	1740	370-1265	323	212	1070	122	170	**XLP256XA11G**
{5,5} **	{0,3} **	310	240	–	32	990	1190	1390	1995	–	210-980	–	540	–	150	595	**XLP506P802 ***
4,7	0,6	310	240	–	32	990	1190	1390	1995	–	210-980	–	540	–	150	600	**XLP506XA12G ***
10,0	2,0	310	240	–	32	990	1190	1390	1995	–	210-980	–	540	–	150	660	**XLP506ZES ***
10,0	2,0	310	240	–	32	990	1190	1390	1995	–	210-980	–	540	–	150	700	**XLP5013ZES ***
3,2	0,4	420	330	–	40	990	1240	1430	1995	–	210-970	–	540	–	150	900	**XLP756XA12G ***
10,0	2,1	400	340	560	40	990	1240	1400	1879	1885	239	425	540	1290	150	970	**VLP1006ZES**
10,0	2,1	400	340	560	40	990	1240	1400	1879	2050	239	425	540	1290	150	993	**VLP10013ZES**
6,6	1,6	553	233	560	76	1220	1620	1740	2285	2370	377	425	453	1415	254	1992	**VLP20013ZES**

** {…} = advance speed in mm per handpump stroke.

Tel: +45 63 12 83 00 | Email: ps@hymatik.com | www.hymatik.com | Hvidkaervej 27a, DK-5250 Odense SV, Denmark

BPR-Series, Roll-Frame Presses

ENERPAC

▼ Shown: **BPR5075**



Expert Designed Versatility

- **Quality welded frame for maximum strength and long life**
- **Frame rolls easily on 4 steel roller bearings**
- **Exclusive 'Hydra-Lift' bolster for effortless adjustment of the vertical daylight**
- **Standad roller head design allows lateral movement and locking of the cylinder up to 300 mm left or right of centre**
- **All models in the quick selection chart have been matched to an electric pump, double-acting cylinder, hose and gauge, offering the complete package**
- **Roll-Frame design features a stationary bed with the ability to support heavy loads**
- **Hydraulic clamp cylinder locks roll-frame into position.**



Cylinder adjustment

Cylinder adjustment allows horizontal side to side cylinder positioning.



Hydra-Lift

Allows easy, effortless daylight adjustment. Standard on all Roll-Frame presses.

Page: **154**

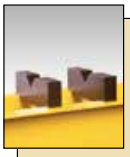

Optional V-Blocks

These V-Blocks are designed for easy fixturing of round stock and other non-uniform materials. Featuring precise fit into the press bolster.

Page: **154**

▼ SELECTION CHART

Press Capacity ton (kN)	Vertical Daylight A (mm) min.	Vertical Daylight A (mm) max.	Maximum Bed Width E (mm)	Electric Pump Model Number	Electric Pump Page	Press Model Number	Double-Acting Cylinder Stroke (mm)	Double-Acting Cylinder Model Number	Double-Acting Cylinder Page	Speed (mm/sec) Rapid Advance	Speed (mm/sec) Pressing
50 (498)	152	942	730	ZE5420SW-S	**104**	**BPR5075**	334	RR5013	**40**	4,1	3,9
100 (933)	159	1048	889	ZE3420SW	**104**	**BPR10075**	333	RR10013	**40**	7,7	0,7
200 (1995)	279	1295	1219	ZE4420SW	**104**	**BPR20075**	330	RR20013	**40**	5,2	0,5

Roll-Frame Presses



▲ *For offshore application high capacity spring loaded cylinders need to be assembled and tested. A special 100 ton roll frame press, with long stroke cylinder has been constructed. All movements are operated and monitored through a PLC controlled pendant.*

BPR Series

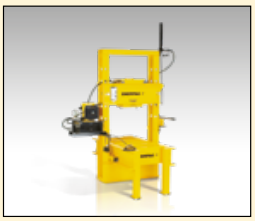

Capacity:
50 - 200 ton

Maximum Daylight x Width:
1295 x 1222 mm

Maximum Operating Pressure:
700 bar



Gauges

All press models include a gauge and gauge adaptor, matching the press capacity:

Press Capacity ton	Gauge Model Number	Adaptor Model Number
50	GF50B	GA2
100	GF871B	GA3
200	GF200B	GA3

For more information on gauges, please refer to the System Components section.

Page: 136

IMPORTANT!

The frameworks of the presses are exclusively designed for pressing operations, not for pulling. For pulling applications please contact Enerpac.



Spring Centred Valves

Manual valves on electric and air pumps of Enerpac presses are Spring Centred Valves. The handle will automatically move into the neutral valve position when released.

Page: 123

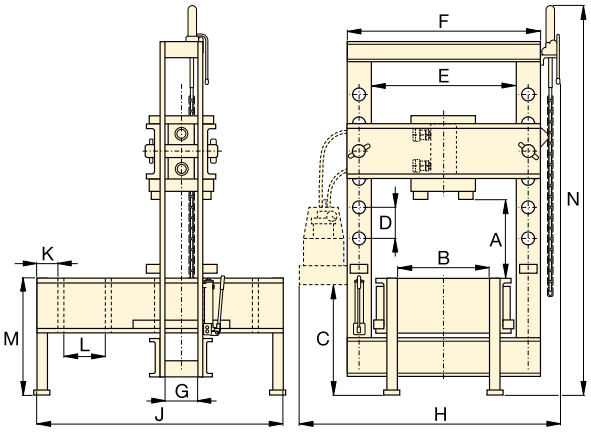

	Roll-Frame Press Dimensions (mm)														Press Model Number
	A (min.-max.)	B	C	D	E	F	G	H	J	K	L	M	N	(kg)	
	152 - 942	526	971	264	730	933	127	1420	1626	203	270	762	2870	917	BPR5075
	159 - 1048	673	965	222	889	1143	146	1605	1676	203	270	813	3021	1767	BPR10075
	279 - 1295	984	933	254	1219	1626	232	2150	2197	203	381	915	3200	4186	BPR20075

A-Series, C-Clamp and Arbor Presses

ENERPAC

▼ Shown from left to right: **A220, A330, A310**



The Standard Workshop Tools

C-Clamp Press

- **5, 10 and 20 ton capacity**
- **Operational in all positions.**

Arbor Press

- **10 and 30 ton capacity**
- **Foot mounting holes for horizontal or vertical positioning**
- **Machined working surfaces for easier fixturing**
- **Slotted back to simplify loading and unloading of longer parts.**



Push Pin A183

For applications requiring precision pressing, such as shaft removal and insertion. This attachment fits 10 ton cylinders and requires the use of a threaded adaptor saddle (**A13**).

Page: 176



Smooth Saddle A185

For pressing applications of delicate parts, such as aluminium castings, this saddle decreases surface marks during the pressing application. Requires 10 ton cylinder and threaded adaptor saddle (**A13**).

Page: 177



10 ton Bench Presses

For 10 ton VLP-Series Bench Presses selection see:

Page: 148

▼ *A310 Arbor Press*



▼ **SELECTION CHART**

Press Type	Press Capacity ton (kN)	Maximum Vertical Daylight (mm)	Maximum Bed Width (mm)	Press Model Number	Cylinder Model Number *	Page:
C-Clamp	**5** (45)	165	51	**A205**	5 ton RC-cylinder *	6
	10 (101)	228	57	**A210**	10 ton RC-cylinder *	6
	20 (178)	305	69	**A220**	25 ton RC-cylinder **	6
Arbor	**10** (101)	230	135	**A310**	10 ton RC-cylinder *	6
	30 (295)	254	178	**A330**	RC308 *	6

* Recommended cylinder must be ordered separately.
** Must be limited to 20 ton.

C-Clamp and Arbor Presses



▲ *RC308 cylinder mounted in A330 Arbor Press powered by a PATG-Turbo Air pump for controlled pressing of bearings for sprockets of weaving machines. The V152 Pressure Relief Valve controls the pressing force.*

A Series



Capacity:
5 - 30 ton

Maximum Daylight x Width:
305 x 178 mm

Maximum Operating Pressure:
700 bar

IMPORTANT!
For high-cycle production applications, the C-Clamp and Arbor presses should be limited to 50% of their capacity.



Hydraulic Cylinders
Cylinders for C-Clamps and Arbor Presses must be ordered separately.

Page: 6



Hydraulic Pumps
Pumps for C-Clamps and Arbor Presses must be ordered separately.

Page: 75

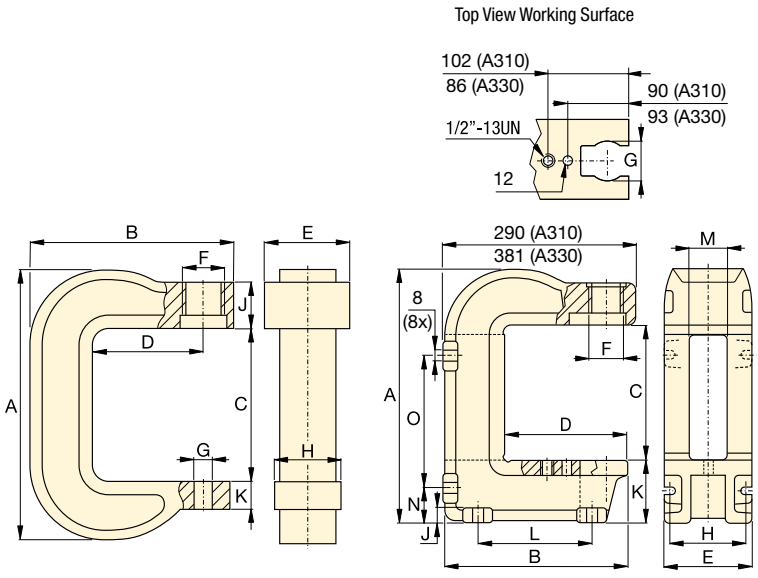

A205, A210, A220 **A310, A330**

	Press Dimensions (mm)															Press Model Number
	A	B	C	D	E	F	G	H	J	K	L	M	N	O	(kg)	
	291	203	165	95	73	1½" -16 UNS	26	51	66	25	–	–	–	–	7	**A205**
	406	283	228	152	83	2¼"-14 UNS	26	76	64	41	–	–	–	–	17	**A210**
	540	346	305	152	121	$3^{5}/_{16}$"-12 UNS	26	95	70	44	–	–	–	–	38	**A220**
	414	281	230	184	151	2¼"-14 UNS	63	122	19	95	175	65	54	219	28	**A310**
	563	356	254	188	178	$3^{5}/_{16}$"-12 UNS	63	140	28	168	203	67	99	276	100	**A330**

Tel: +45 63 12 83 00 | Email: ps@hymatik.com | www.hymatik.com | Hvidkaervej 27a, DK-5250 Odense SV, Denmark

Press Accessories

ENERPAC

Description	Press Capacity and Press Series	Model Number		Features
V-Blocks	10 ton Bench VLP-Presses	**VB10**		• Facilitate positioning of pipes and bars • All V-Block model numbers include 2 V-blocks.
	25 ton Workshop XLP-Presses	**VB25**		
	50 ton Workshop XLP-Presses	**VB501**		
	75 ton XLP- and 100 ton VLP-Presses	**VB101**		
	200 ton Workshop VLP-Press	**A200**		
	200 ton BPR-Roll-Frame Press	**A200R**		
Hydra-Lift	50 ton BPR-Roll-Frame Press	**IPLR100**		• Allows easy, effortless daylight adjustments • Includes accessory chain.
	100 ton BPR-Roll-Frame Press	**IPLR100**		
	200 ton BPR-Roll-Frame Press	**IPLR200**		
Hydrajust Bed Positioning	100 ton Workshop VLP-Presses	**VHJ100**		• Allowing effortless daylight adjustment by moving the lower bed up and down • Can be used with presses equipped with double-acting cylinder.
	200 ton Workshop VLP-Press	**BSS5380**		
	IMPORTANT! The "Hydrajust" bed positioning is not designed to withstand full cylinder capacity, only to be used for bed adjustment.			
Safety Cage	Front door for XLP25 ton press	**XLP25SC1**		• Aluminium safety cage with polycarbonate glass for additional operator protection • Front and rear door for easy access to press bed
	Front + rear door for XLP25 ton press	**XLP25SC2**		
	Front door for XLP50 ton press	**XLP50SC1**		
	Front + rear door for XLP50 ton press	**XLP50SC2**		
	Front door for XLP75ton press	**XLP75SC1**		
	Front + rear door for XLP50 ton press	**XLP75SC2**		
Safety Screen	Universal moveable safety screen to be positioned before any press	**XLPSS1**		• Aluminium safety screen with polycarbonate glass • Versatile use and protection • Lockable wheels for easy positioning

IMPORTANT!

The pressframe of the workshop presses are exclusively designed for pressing operations, not for pulling. For pulling applications please contact Enerpac.

In order to fully comply with CE regulations, some presses must be equipped with specific safety components, such as spring centered valves, two-hand control devices, guards or others.

Enerpac standard general purpose presses are supplied without guards, and have a plunger speed of less than 10 mm/second.

However, your application may require that measures should be taken to reduce the risk of injury to operators and other personnel by providing appropriate safeguarding, training and conducting a risk assessment, which eliminates or reduces danger.

Health & safety within your workplace is your responsibility, not that of Enerpac.

Advice on such matters is available from your local enforcement agency. If you require any further information on Enerpac accessories that may help you conform to the Machinery Directive or European legislation contact Enerpac.

Press Frame

Press frames include features like workpiece side-loading and height adjustment of the upper bed and lower bed.

Power Source: Depending on the production requirements, Enerpac presses can be powered by manual, air-hydraulic and electric-drive power sources.

Cylinder: Depending on the application, double-acting cylinders offer increased efficiency. Check out the Selection Charts for the press best suited for your needs.

Gauge: All Workshop presses and Roll-Frame Presses feature an easy to monitor pressure/force gauge for increased safety.

Tension Meter and Load Cells

▼ Shown: **LH102** and **TM5** (in middle)



TM LH Series



Capacity:
900 - 90.000 kg

Accuracy, % of full scale:
± 2%

TM and LH models are 100% tested to verify accuracy within a ± 2% range.

If your application requires a calibrated tool, it must be submitted for certification testing. Certification is NOT available from Enerpac.

Tension Meter TM5

- **Accuracy ± 2% of full scale**
- **Zinc and bronze plated to resist corrosion**
- **Dual-range readout in kilograms and pounds**
- **Maximum indicating pointer reading for pre-selected forces or to maintain force readings**
- **Cushioned metal case provides safe storage and transport.**

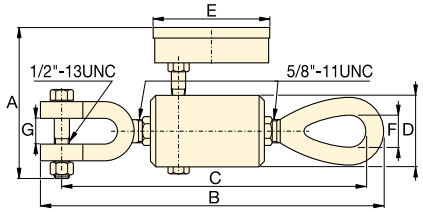

TM5

Load Cells LH-Series

- **Accuracy ± 2% of full scale**
- **Swivel loading pad reduces eccentric loading for improved accuracy**
- **Maximum indicating pointer reading pre-selected forces or to maintain maximum force readings**
- **Dual-range readout in kilograms and pounds.**

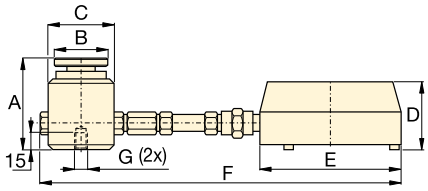

LH-Series

▼ SELECTION CHART

Type	Gauge Capacity (kg)	Gauge Capacity (lbs)	Model Number	Minimum Reading (kg)	Minimum Reading (lbs)	Gauge Scale Increments (kg)	Gauge Scale Increments (lbs)	Dimensions (mm) A	B	C	D	E	F	G *
Direct Mounted	4.500	10.000	**TM5**	500	1.000	100	100	120	247	236	50	93	22	19
Direct Mounted Load Cell	900	2.000	**LH10**	100	200	20	20	77	44	57	60	101	215	¼"- 20, 44,5 BC
	4.500	10.000	**LH50**	500	1.000	100	100	77	44	57	60	101	215	¼"- 20, 44,5 BC
Remote Mounted with 0,6 m Hose	900	2.000	**LH102**	100	200	20	20	77	44	57	60	147	846	¼"- 20, 44,5 BC
	4.500	10.000	**LH502**	500	1.000	100	100	77	44	57	60	147	846	¼"- 20, 44,5 BC
	9.000	20.000	**LH1002**	1.000	2.000	200	200	77	44	57	60	147	846	¼"- 20, 44,5 BC
Remote Mounted with 1,8 m Hose	21.000	50.000	**LH2506**	3.000	5.000	500	500	101	69	85	60	147	2094	⅜"- 24, 63 BC
	45.000	100.000	**LH5006**	5.000	5.000	1.000	1.000	132	101	127	60	147	2135	⅜"- 24, 89 BC
	90.000	200.000	**LH10006**	10.000	10.000	1.000	2.500	158	127	158	60	147	2166	⅜"- 24, 102 BC

* BC = Bolt Circle

Hydraulic and Mechanical Pullers

ENERPAC

Enerpac offers a complete line of pullers with the widest range of sizes, capacities and styles. Whether your application requires mechanical, hydraulic or the patented Lock-Grip system, Enerpac can satisfy your requirements.

Made of high strength steel alloys, you can depend on Enerpac pullers to provide years of trouble-free operation, even in the harshest environments.



Hydraulic Pullers

These hydraulic pullers eliminate time-consuming and unsafe hammering, heating or prying. Damage to parts is minimized through the use of controlled hydraulic power.



Lock-Grip Pullers

The puller's self-centering closing system allows all jaws to move simultaneously, making it easy for a single operator to mount the puller and to perform the application.

CAUTION!

Not all puller components and configurations are rated at the set capacity. Please contact Enerpac for details.

IMPORTANT!

Always wear Safety Goggles and Gloves while using pullers.



Puller Section Overview

When selecting a puller it is important to consider 3 basic specifications:

1. The Capacity:

is the amount of force the puller is capable of producing.

Typically, the capacity required for a job can be determined by using the shaft diameter of the part being pulled.

For manual pullers, the center bolt diameter of the puller should be at least half the diameter of the shaft being pulled from.

For hydraulic pullers, the capacity in tons should be 0,28 to 0,4 times the shaft diameter in mm. Use the following chart:

Shaft Diameter	Puller Capacity
0 - 25 mm	13 ton
25 - 50 mm	22 ton
50 - 89 mm	33 ton
89 - 140 mm	45 ton

2. The Reach:

is the distance between the bottom of the base and the jaw flats. The puller's reach must equal or exceed the same distance of the part being pulled.

3. The Spread:

is the distance between the jaws. The puller's spread needs to be greater than the width of the part being pulled.

Puller Function	Capacity ton	Puller Type	Series		Page
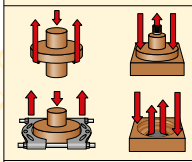	13-45	**Master Puller Sets** Max. Reach: 252 - 700 mm Max. Spread: 247 - 1100 mm	BHP		158 ▶
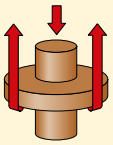	13-45	**Grip Puller Sets** Max. Reach: 252 - 700 mm Max. Spread: 249 - 1100 mm	BHP		159 ▶
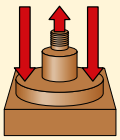	6-22	**Cross Bearing Puller Sets** Max. Reach: 357 - 864 mm Max. Spread: 260 - 580 mm	BHP		160 ▶
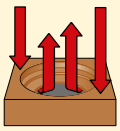	6-22	**Bearing Cup Pullers** Max. Reach: 115 - 150 mm Max. Spread: 145 - 240 mm	BHP		161 ▶
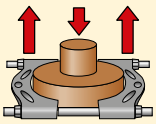	6-22	**Bearing Separators** Max. Width: 110 - 260 mm Max. Spread: 110 - 250 mm	BHP		161 ▶
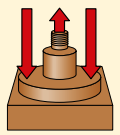	3-40	**Mechanical Lock-Grip Pullers** Max. Reach: 102 - 335 mm Max. Spread: 132 - 635 mm	LGM		162 ▶
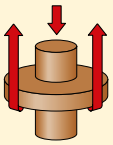	10-64	**Hydraulic Lock-Grip Pullers** Max. Reach: 215 - 408 mm Max. Spread: 300 - 660 mm	LGH		166 ▶
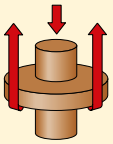	–	**Internal Mechanical Puller** Max. Reach: 45 - 79 mm Max. Spread: 25 - 100 mm	IPM		168 ▶
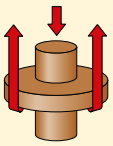	100	**Hydraulic Sync-Grip Pullers** Max. Reach: 1000 mm Max. Spread: 1600 mm	SGH GPS		169 ▶
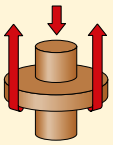	100	**Posi Lock® Hydraulic Pullers** Max. Reach: 1219 mm Max. Spread: 190 - 1778 mm	EPH		170 ▶

BHP-Series, Master Puller Sets

ENERPAC

▼ Shown: **Master Puller Set BHP3751G**



Multi Purpose Puller Set

WARNING
Do not exceed 50% of the rated puller capacity when using two jaw configurations, a double crosshead (2 grip arms) or when using puller legs in combination with bearing puller attachments.

- **Supplied with a full hydraulic set including pump, hose, cylinder, gauge, gauge adaptor and wooden case**
- **High quality, forged steel components provide superior reliability and service**
- **Sets include speed crank and adjusting screw for fast contact to work before hydraulics are applied**
- **All Master Puller Sets include a Grip Puller, a Cross Bearing Puller, a Bearing Cup Puller and a Bearing Separator, which can be ordered separately, see items nr. 10, 20 , 30 and 40.**

▼ *Maintenance engineers throughout the industry greatly appreciate the Enerpac Master Puller sets.*



▼ **SELECTION CHART**

Master Puller Set Capacity *		**13 ton**	**22 ton**	**33 ton**	**45 ton ****	***Page:***
	Model Number ▶	**BHP1752** [1)]	**BHP2751G**	**BHP3751G**	**BHP5751G**	
Included Hydraulics	**Set Weight ▶**	37 kg	90 kg	172 kg	298 kg	
• Hand Pump		P142	P392	P392	P80	**76-79** ▶
• Cylinder		RWH121900	RCH202	RCH302	RCH603	**34** ▶
• Saddle		–	HP2015	HP3015	HP5016	**35** ▶
• Hose		HC7206C	HC7206C	HC7206C	HC7206C	**128** ▶
• Gauge + Adaptor		GA45GC	GA45GC	GA45GC	GA45GC	**142** ▶
Included Pullers						
10 Grip Puller		BHP1762	BHP252	BHP352	BHP552	**159** ▶
20 Cross Bearing Puller		BHP1772	BHP262	BHP362	BHP562	**160** ▶
30 Bearing Cup Puller		BHP180	BHP280	BHP380	BHP580	**161** ▶
40 Bearing Separator		BHP181	BHP282	BHP382	BHP582	**161** ▶
• Case		CM6	CW350	CW350	CW750	

* See warning on this page.
** Puller capacity at 540 bar; maximum cylinder capacity at 700 bar is 60 ton.
[1)] Includes Adaptor FZ1055.

Grip Puller Sets

▼ Shown: **Grip Puller Set BHP351G**



- **Precise hydraulic control allows fast, efficient and safe pulling**
- **High quality, forged steel components provide superior reliability and service**
- **Available with and without full hydraulic set.**

BHP Series



Capacity:
13, 22, 33 and 45 ton

Reach:
252 - 700 mm

Spread:
249 - 1100 mm

Maximum Operating Pressure:
700 bar

Ordering Example

Model Number BHP251G:

includes Grip Puller BHP252 and a full hydraulic set. (Hand pump, cylinder, saddle, hose, gauge and gauge adaptor).

Model Number BHP252:

includes Grip Puller mechanical parts only, for use with your existing hydraulics.

▼ **SELECTION CHART**

Grip Puller Set Capacity **		**13 ton**	**22 ton**	**33 ton**	**45 ton *****
	Model Number ▶	**BHP152** [1]	**BHP251G**	**BHP351G**	**BHP551G**
Included Hydraulics	**Set Weight ▶**	22 kg	56 kg	91 kg	160 kg
• Hand Pump		P142	P392	P392	P80
• Cylinder		RWH121900	RCH202	RCH302	RCH603
• Saddle		–	HP2015	HP3015	HP5016
• Hose		HC7206C	HC7206C	HC7206C	HC7206C
• Gauge + Adaptor		GA45GC	GA45GC	GA45GC	GA45GC
10 Grip Puller	**Model Number ▶**	**BHP1762 ***	**BHP252 ***	**BHP352 ***	**BHP552 ***
Maximum Spread (mm)	2-jaw	249	400	593	899
	3-jaw	249	499	800	1100
Maximum Reach (mm)	2-jaw	252	300	387	700
	3-jaw	252	300	387	700
Jaw (mm)	Thickness	15	20	24	30
	Width	23	27	38	39
Adjusting Screw (mm)	Thread	¾" - 16 UNF	1" - 8 UNC	1¼" - 7 UNC	1⅝" - 5.5 UNS
	Length	400	670	790	975
• Case		CW166	CW166	CW350	CW750

[1] Includes Adaptor FZ1055.
* Grip Puller order number without hydraulics.
** See warning on page 158.
*** Puller capacity at 540 bar; maximum cylinder capacity at 700 bar is 60 ton.

BHP-Series, Cross Bearing Puller Sets

ENERPAC

▼ Shown: **Cross Bearing Puller Set BHP361G**



- **Precise hydraulic control allows fast, efficient and safe pulling**
- **High quality, forged steel components provide superior reliability and service.**

BHP Series

Capacity:
6, 11, 16 and 22 ton

Reach:
357 - 864 mm

Spread:
260 - 580 mm

Maximum Operating Pressure:
350 bar

CAUTION! Not all puller components and configurations are rated at the set capacity. Please contact Enerpac for details.

Cross Bearing Puller Sets			
Hand Pump	**XA11G** Air Pump	**PUD1300** Electric Pump	**XC1201M** Cordless Pump
BHP162	**BHP162A**	**BHP162EE ***	**BHP162CE ***
BHP261G	**BHP261GA**	**BHP261GEE ***	**BHP261GCE ***
BHP361G	**BHP361GA**	**BHP361GEE ***	**BHP361GCE ***
BHP561G	**BHP561GA**	**BHP561GEE ***	**BHP561GCE ***

* **E** = 230 V pump. For 115 V change "E" suffix into "**B**".

▼ **SELECTION CHART**

Cross Bearing Puller Set Capacity		**6 ton**	**11 ton**	**16 ton**	**22 ton**
	Model Number ▶	**BHP162** [1]	**BHP261G**	**BHP361G**	**BHP561G**
Included Hydraulics	**Set Weight ▶**	26 kg	62 kg	121 kg	185 kg
• Hand Pump		P142	P392	P392	P80
• Cylinder		RWH121900	RCH202	RCH302	RCH603
• Saddle		–	HP2015	HP3015	HP5016
• Hose		HC7206C	HC7206C	HC7206C	HC7206C
• Gauge + Adaptor		GA45GC	GA45GC	GA45GC	GA45GC
20 Cross Bearing Puller [2]	**Model Number ▶**	**BHP1772**	**BHP262**	**BHP362**	**BHP562**
Spread (mm)	Maximum	260	345	440	580
	Minimum	115	140	180	220
Reach (mm)	Maximum	357	570	710	864
Adjusting Screw (mm)	Diameter	¾"- 16 UNF	1"- 8 UNC	1¼"- 7 UNC	1⅝"- 5.5 UNS
	Length	400	675	795	975
Leg (mm)	Length	105	239	203	609
	Length	357	419	457	863
	Length	–	571	711	–
	Length	–	114	–	–
Upper Leg Ends (mm)	Thread	¾"- 16 UNF	¾"- 16 UNF	1-14 UNS	1¼"- 12 UNF
Lower Leg Ends (mm)	Thread	⅝"- 18 UNF	⅝"- 18 UNF	1-14 UNS	1¼"- 12 UNF
30 Bearing Cup Puller [2]	**Model Number ▶**	**BHP180**	**BHP280**	**BHP380**	**BHP580**
40 Bearing Separator [2]	**Model Number ▶**	**BHP181**	**BHP282**	**BHP382**	**BHP582**
• Wooden Case		CM6	CW187	CW350	CW750

[1] Includes Adaptor FZ1055.
[2] Can be ordered separately without hydraulic components, see next page.

Bearing Cup Pullers and Bearing Separators

▼ Shown: **BHP380**



Bearing Cup Puller

- **Made of high strength steel alloy**
- **Easily adapted to Cross Bearing Pullers for fast and efficient removal of the most difficult parts**
- **Adjustable to fit a variety of bearings and seals.**

BHP Series



Capacity:
6, 11, 16 and 22 ton

Maximum Reach:
115 - 150 mm

Spread Range:
145 - 240 mm

Maximum Operating Pressure:
350 bar

▼ SELECTION CHART

Capacity *		6 ton	11 ton	16 ton	22 ton
30 Bearing Cup Puller					
Model Number ▶		**BHP180**	**BHP280**	**BHP380**	**BHP580**
Spread (mm)	Max.	145	160	240	240
	Min.	40	32	60	60
Reach (mm)	Max.	115	140	150	150
Center Screw	Thread	¾"- 16 UNF	1"- 8 UNC	1¼"- 7 UNC	1⅝"- 5.5 UNS

* Puller capacity, not attachment capacity. See warning on this page.

WARNING
Do not exceed 50% of the rated puller capacity when using a double crosshead (2 grip arms) or when using puller legs in combination with bearing puller attachments.

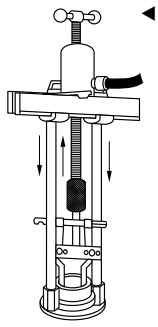

◀ *Bearing Cup Puller shown with Crosshead Puller Attachment.*

▼ Shown: **BHP382**



Bearing Separator

- **Made of high strength steel alloy**
- **Wedge-shaped edges allow removal of the most hard-to-grip components**
- **Easily adapted to Cross Bearing Pullers for fast and efficient removal of the most difficult parts.**

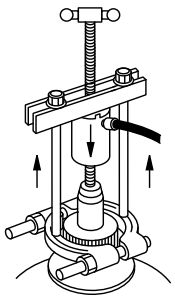

Bearing Separator shown with Crosshead Puller Attachment. ▶

▼ SELECTION CHART

Capacity *		6 ton	11 ton	16 ton	22 ton
40 Bearing Puller					
Model Number ▶		**BHP181**	**BHP282**	**BHP382**	**BHP582**
Spread (mm)	Max.	110	134	250	250
	Min.	10	12	17	17
Width (mm)		110	155	260	260
Thread		⅝"-18 UNF	¾"- 18 UNF	1"- 14 UNS	1¼"- 12 UNF

* Bearing Separator rated at 50% of puller capacity. See warning on this page.

Bearing Separator
Bearing Separator has wedge shaped edges for placing puller behind hard to reach bearings, gears, etc., where clearance prevents direct application of grip puller arms.

The Bearing Separator can be used with the Cross Bearing Puller or the Grip Puller.

LGM-Series, Mechanical Lock-Grip Pullers

ENERPAC

▼ 2 and 3-Jaw Mechanical Lock-Grip Pullers



The simple, safe and cost-effective way to remove shaft-mounted parts

- **Quickly and easily mount on a wide range of applications**
- **Lock-on jaws offer a secure grip for safe and easy operation**
- **Synchronous jaw movement enables entire pulling job to be performed by a single operator**
- **Available in 2 and 3-jaw configurations.**

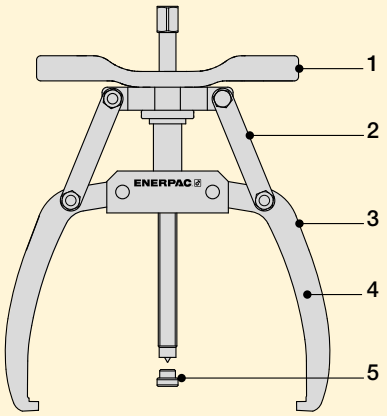

1. Convenient adjustment handle simplifies positioning of jaws on application and increases speed of operation.
2. Locking mechanism helps prevent puller jaws from slipping off application during pulling process.
3. Greater spreading width on top portion of jaws enables use on thicker objects.
4. Synchronous jaw movement increases ease of use, allowing one operator to mount the tool and perform the pulling application.
5. Point protector helps prevent damage to spindle when pulling against a flat surface.

▼ *Lock-Grip Pullers – the simple, safe and cost-effective way to remove shaft-mounted parts.*



LGM-Series, Mechanical Lock-Grip Pullers

LGM-Series, Lock-Grip Pullers

LGM-Series pullers are an ideal solution for pulling small to medium-size wheels, sprockets, bearings and other similar shaft-mounted parts. The puller's self- centering closing system allows all jaws to move simultaneously, making it easy for a single operator to mount the puller and to perform the application.

Turning the puller handle locks the jaws onto the application, allowing the desired object to be pulled free when the spindle is turned.

LGM Series



Puller Capacity:
3 - 40 ton

Maximum Reach:
102 - 335 mm

Maximum Spread:
132 - 635 mm

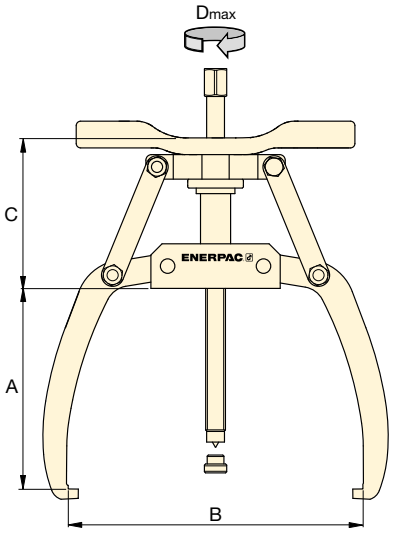

IMPORTANT!
Always wear safety goggles and gloves while using pullers.

Point Protector

LGM-Series Pullers MUST be used with a point protector if the shaft end does not contain a drilled center hole.

One point protector is included with every puller.

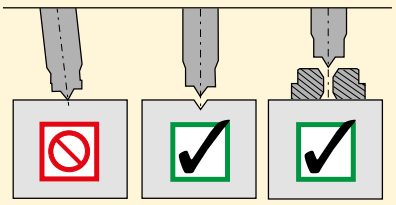

▼ SELECTION CHART

Mechanical Puller Model Number	Dimensions (mm) Maximum Reach A	Minimum Spread Diameter B	Maximum Spread Diameter B	C	Number of Jaws	Puller Capacity US ton (kN)	Maximum Torque Dmax (Nm)	(kg)	Replacement Point Protector Part Number
LGM203	102	28	132	60	2	**3** (27)	41	1,7	**SGM0404**
LGM305	102	28	132	60	3	**5** (45)	68	2,1	
LGM204	142	30	186	90	2	**4** (36)	68	2,5	
LGM306	142	30	186	90	3	**6** (49)	100	3,1	
LGM207	177	35	260	134	2	**7** (62)	117	4,9	**SGM0704**
LGM308	177	35	260	134	3	**8** (71)	134	6,9	
LGM211	215	84	300	126	2	**11** (98)	203	6,7	
LGM318	215	110	390	140	3	**18** (160)	332	9,9	
LGM324	265	90	460	140	3	**24** (214)	443	13,9	**LGH14K6**
LGM340	335	100	635	210	3	**40** (356)	996	36,0	**LGH24K6**

LGH-Series, Hydraulic Lock-Grip Pullers

ENERPAC

▼ 2 and 3-Jaw Hydraulic Lock-Grip Pullers



The simple, safe and cost-effective way to remove shaft-mounted parts

- **Quickly and easily mount on a wide range of applications**
- **Hydraulically applied pulling force increases pulling capacity, reducing operator fatigue**
- **Lock-on jaws offer a secure grip for safe and easy operation**
- **Synchronous jaw movement enables entire pulling job to be performed by a single operator**
- **Available in 2 and 3-jaw configurations with or without a detachable hollow cylinder.**

Point Protector

LGH-Series Pullers MUST be used with a point protector if the shaft end does not contain a drilled center hole.

One point protector is included with every puller.

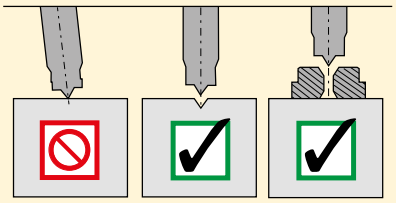

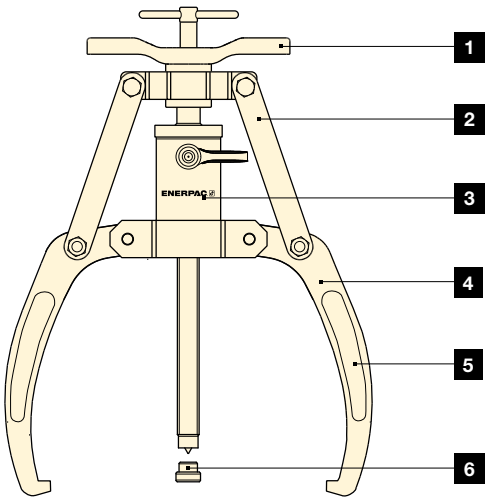

1. Convenient adjustment handle simplifies positioning of jaws on application and increases speed of operation.
2. Locking mechanism helps prevent jaws from slipping off application during pulling process.
3. Detachable hollow cylinder offers increased pulling capacity compared to mechanical alternatives.
4. Greater spreading width on jaws enables use on thicker objects.
5. Synchronous jaw movement increases ease of use, allowing one operator to mount the tool and perform the pulling application.
6. Point protector helps prevent damage to spindle when pulling against a flat surface.

Hydraulic Lock-Grip Pullers

LGH-Series, Lock-Grip Pullers

LGH-Series pullers provide the same safety and ease of use as their mechanical counterparts, with the pulling force applied by a standard 700 bar hydraulic cylinder.
LGH-Series pullers can apply up to 64 tons of force and are perfect for removing larger shaft-mounted objects up to 660 mm diameter.

Turning the puller handle locks the jaws onto the application, allowing the desired object to be pulled free when the spindle is turned.

LGH Series



Puller Capacity:
10 - 64 ton

Maximum Reach:
215 - 408 mm

Maximum Spread:
300 - 660 mm

Maximum Operating Pressure:
700 bar

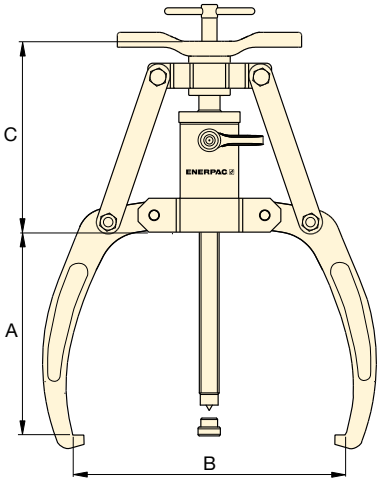

IMPORTANT!
Always wear safety goggles and gloves while using pullers.

Hydraulic Pullers
LGH-Series Hydraulic Pullers include puller and hydraulic cylinder.

Hydraulic Puller Sets
LGHS-Series Hydraulic Pullers Sets include hydraulic puller, pump, gauge and HC7206C hydraulic hose.
Choose pump options below.

▼ SELECTION CHART

Hydraulic Puller Model Nr [1]	Dimensions (mm) Max. Reach A	Minimum Spread Diameter B	Maximum Spread Diameter B	C	Number of Jaws	Puller Capacity US ton (kN)	(kg)	Replacement Point Protector Part Number	Hydraulic Puller Sets Model Number: Hand Pump P392 Gauge Ass'y GA45GC	Air Pump XA11G Integrated Gauge	Electric Pump PUD1300E * Gauge G2535L	Cordless Pump XC1201ME * Gauge Ass'y GA45GC
LGH210	215	84	300	192	2	**10** (92)	10	**SGM0704**	–	–	–	–
LGH310	215	84	300	192	3	**10** (92)	13	**SGM0704**	**LGHS310H**	**LGHS310A**	**LGHS310EE ***	**LGHS310CE ***
LGH214	260	125	380	186	2	**14** (125)	14	**LGH14K6**	–	–	–	–
LGH314	260	125	380	186	3	**14** (125)	18	**LGH14K6**	**LGHS314H**	**LGHS314A**	**LGHS314EE ***	**LGHS314CE ***
LGH224	336	165	480	325	2	**24** (215)	37	**LGH24K6**	–	–	–	–
LGH324	336	165	480	325	3	**24** (215)	47	**LGH24K6**	**LGHS324H**	**LGHS324A**	**LGHS324EE ***	**LGHS324CE ***
LGH253	408	230	660	473	2	**53** (467)	111	**LGH253K6**	–	–	–	–
LGH364	408	230	660	473	3	**64** (576)	139	**LGH253K6**	**LGHS364H**	**LGHS364A**	**LGHS364EE ***	**LGHS364CE ***

[1] Hydraulic puller models include cylinder. To receive puller without cylinder add "NC" after LGH (Example: **LGHNC210**).

* E = for 230V applications. For 115V applications change last suffix from E into B. Example **LGHS310EB**.

Hydraulic Lock-Grip Master Puller Sets

ENERPAC

Master Puller Sets include a hydraulic puller, cylinder, a pump with hose and gauge for standard pulling applications, as well as a selection of accessories designed for work environments where clearance prevents a direct application of the puller jaws.



Lock-Grip Pullers:
All sets come with a hydraulic LGH-Series Puller. Both two jaw and three jaw versions are available.



Detachable Hollow Cylinder:
Provided with all hydraulic pullers as well as the Cross Bearing Puller.



Pump with Hose and Gauge:
Hydraulic Puller Sets and Master Puller Sets are supplied with a hose, gauge, and your choice of a hand, air, electric or battery-powered cordless pump.



Cross Puller:
Hydraulically powered via a detachable hydraulic cylinder and pump. The Cross Puller can be used individually as a 'push' puller, or in conjunction with the Bearing Separator or Bearing Cup Puller.



Bearing-Cup Puller:
Specifically designed to pull cup style bearings and other applications requiring an internal style puller.



Bearing Separator (used with Cross Bearing Puller):
Features narrow edges, which enable puller to be placed behind hard to reach bearings, gears, etc., where limited clearance prevents the direct application of puller arms.

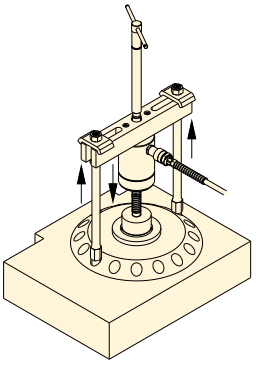

▲ *Cross Bearing puller on application*

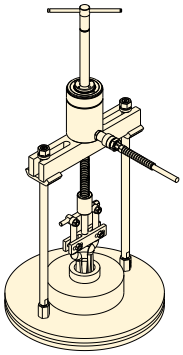

▲ *Cross Bearing Puller with Bearing Cup Puller on application*

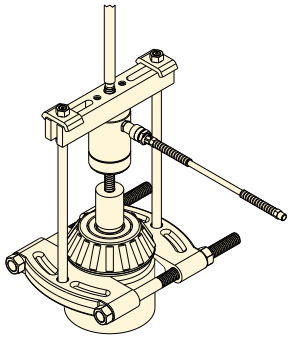

▲ *Cross Bearing Puller with Bearing Separator on application*

▼ DIMENSIONAL INFORMATION

Model Number	Cross Bearing Puller (mm) A	B min.	Thread Size C	(kg) *
BHP112	280	115	⅝"-18 UNF	2,0
BHP172	280	115	⅝"-18 UNF	2,1
BHP272	370	140	⅝"-18 UNF	2,4
BHP672	615	220	1¼"-12 UNF	6,4

Model Number	Bearing Separator (mm) A	B min.	B max.	Thread Size C	(kg)
BHP181	110	10	110	⅝"-18 UNF	2,8
BHP282	156	12	134	⅝"-18 UNF	5,7
BHP292	182	13	210	⅝"-18 UNF	12,5
BHP682	300	20	300	1¼"-12 UNF	43,5

Model Number	Bearing Cup Puller (mm) A	B	C min.	C max.	(kg)
BHP180	135	236	40	145	2,0
BHP190	164	265	40	145	2,0
BHP280	164	265	40	145	2,4
BHP580	150	310	60	240	6,4

* With slotted crosshead, cylinder and spindle.

Tel: +45 63 12 83 00 | Email: ps@hymatik.com | www.hymatik.com | Hvidkaervej 27a, DK-5250 Odense SV, Denmark

Hydraulic Lock-Grip Master Puller Sets

▼ LGHMS Master Puller Set with Hand Pump Option



LGHMS Series

Puller Capacity:
10 - 64 ton

Maximum Reach:
215 - 408 mm

Maximum Spread:
300 - 660 mm

Maximum Operating Pressure:
700 bar

- **All LGHMS-Series Master Puller Sets include an LGH-Series Hydraulic Puller with 3 jaws, a Cross Puller, a Bearing Separator, a Bearing Cup Puller, a detachable Hollow Cylinder, a hose, a gauge and a pump**
- **Set options include hand, air, electric or battery-powered pump for an optimal solution to every application.**

Puller Dimensions
See dimensional information for LGH-pullers on page 165.
For dimensions of BHP-puller attachments, see page 166.

LGH-Series, Hydraulic Pullers
Hydraulic Pullers include puller and hydraulic cylinder.

LGHMS-Series, Hydraulic Master Puller Sets
Hydraulic Master Pullers Sets include LGH-hydraulic puller, pump, gauge and HC7206C hydraulic hose.
Choose pump options below.

WARNING!
Enerpac hydraulic pullers can be operated upto 700 bar. When using accessories, hydraulic pressure MUST BE LIMITED to maximum capacities below.

▼ SELECTION CHART

Hydraulic Puller Capacity	Hydraulic Master Puller Sets Model Numbers				Master Puller Sets include following components					
						Hydraulic 3-Jaws Puller	Maximum Capacity Accessories	Cross Puller Model Nr.	Bearing Separator Model Nr.	Bearing Cup Puller Model Nr.
	Hand Pump P392	Air Pump XA11G	Electric Pump PUD1300E*	Cordless Pump XC1201ME*	Hydraulic Hose Model Nr.					
US ton (kN)	Gauge Ass'y GA45GC	Integrated Gauge	Gauge G2535L	Gauge Ass'y GA45GC			US-ton (kN)			
10 (92)	LGHMS310H	LGHMS310A	LGHMS310EE*	LGHMS310CE*	HC7206C	LGH310	**7** (75)	BHP112	BHP181	BHP180
14 (125)	LGHMS314H	LGHMS314A	LGHMS314EE*	LGHMS314CE*	HC7206C	LGH314	**7** (75)	BHP172	BHP282	BHP190
24 (215)	LGHMS324H	LGHMS324A	LGHMS324EE*	LGHMS324CE*	HC7206C	LGH324	**12** (107)	BHP272	BHP292	BHP280
64 (576)	LGHMS364H	LGHMS364A	LGHMS364EE*	LGHMS364CE*	HC7206C	LGH364	**25** (227)	BHP672	BHP682	BHP580

* E = for 230V applications. For 115V applications change last suffix from E into B. Example: **LGHMS310CB**.

Tel: +45 63 12 83 00 | Email: ps@hymatik.com | www.hymatik.com | Hvidkaervej 27a, DK-5250 Odense SV, Denmark

IPM-Series, Internal Mechanical Puller

ENERPAC

▼ IPM3 Internal Mechanical Puller



IPM
Series

Maximum Reach:
45 - 79 mm

Spread Range:
25 - 100 mm

IMPORTANT!
Always wear Safety Goggles and Gloves while using pullers.

- **Remove bearings or other shaft-mounted parts where no spindle support is available**
- **Slide hammer allows for application of safe, high-impact force**
- **Jaw design provides secure grip**
- **Includes two sets of jaws for internal and external pulling applications.**

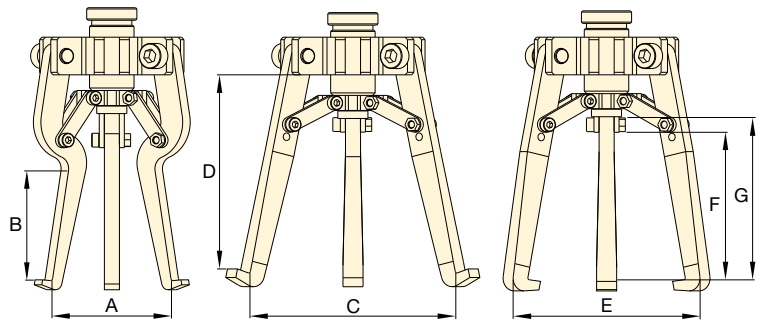

IPM3

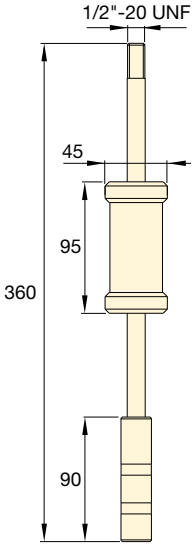

Slide Hammer Dimensions (mm)

▼ **DIMENSIONAL DATA**

Model Number	Internal Jaw Dimensions (mm)			Standard Jaw Dimensions (mm)							
				Internal Configuration			External Configuration				
	Minimum Spread Diameter	Maximum Spread Diameter	Maximum Reach	Minimum Spread Diameter	Maximum Spread Diameter	Maximum Reach	Minimum Spread Diameter	Maximum Spread Diameter	Maximum Reach		
	A	A	B	C	C	D	E	E	F	G	(kg)
IPM3	25	60	45	60	100	79	15	75	55	70	1,9

100 ton Hydraulic Sync-Grip Puller

▼ SGH100



- **Sync Grip mechanism synchronizes movement of all jaws, providing enhanced control of pulling process**
- **No need to cut, heat or torch components for removal, resulting in safer environment for operator, and preventing damage to equipment**
- **A hydraulically applied pulling force of up to 100 ton allows a traditionally strenuous task to be completed at the push of a button**
- **Provides 100 ton pulling force at a fraction of the price of alternative solutions**
- **One SGH10004 point protector is included with each SGH100.**

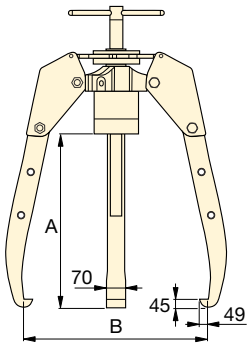

Number of Jaws	Capacity ton (kN)	Model Number *	Maximum Reach A (mm)	Maximum Spread B (mm)	Cylinder Stroke (RCH1003) (mm)	(kg)
3	**100** (980)	**SGH100**	1000	1600	76	322

* Available as complet set. Total set weight 459 kg.

SGH Series

Capacity:
100 ton

Maximum Reach:
1000 mm

Spread Range:
1600 mm

Maximum Operating Pressure:
700 bar

Sync-Grip Puller – Simple, synchronous movement

The Sync Grip mechanism synchronizes movement of all jaws for simultaneous engagement, allowing one operator to mount the tool and perform the pulling application. Hydraulically applied pulling force increases pulling capacity and reduces operator fatigue, enabling quicker and easier set up.

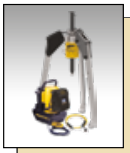

Sync-Grip Puller Sets

For ordering convenience the SGH100 is avalaible as complete set with HC7206C hose, GA45GC gauge adapter assembly and ZE3304S electric pump.

Model Nr.	Description
GPS100EB	Set with 120 V pump
GPS100EE	Set with 240 V pump



Point Protector

To prevent damage a point protector must be used if the shaft end does not have a drilled center hole.

Model Nr.	Description
SGH10004	Point protector for SGH100

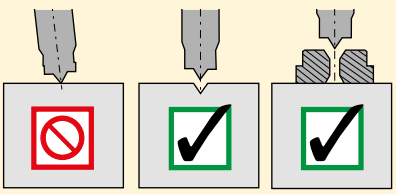

EPH-Series, 100 ton Posi Lock® Grip Pullers

ENERPAC

▼ EPH1003E



High-Tech Pulling

Posi Lock® Pullers

The puller that meets the safety challenge. A control cage holds the pulling jaws securely in working position. This patented feature reduces the possibility of the puller jaws slipping off the work surface, thereby increasing productivity and tool life and reducing dangerous situations for the user.

- **Roller cart with power lift**
- **Hydraulically actuated lift cylinder on cart extends puller from ground to a height of 1,69 m**
- **Adjustable jaw tips**
- **Includes ZE3-Series 230 Volt electric one stage pump with remote pendant for fingertip control of the removal process.**

Pushing Adaptors

All Posi Lock® 100 Ton Hydraulic Pullers include following pushing adaptors.

Diameter (mm)	Length (mm)	Model Number
89	737	**EPHT1162**
89	483	**EPHT1163**
89	229	**EPHT1164**



◀ *EPH1003E used in maintenance on mining equipment.*

Posi Lock® 100 ton Hydraulic Grip Pullers

EPH Series



Capacity:
100 ton

Maximum Reach:
1219 mm

Spread Range:
190 - 1778 mm

Maximum Operating Pressure:
700 bar

IMPORTANT!
Always wear safety goggles and gloves while using pullers.

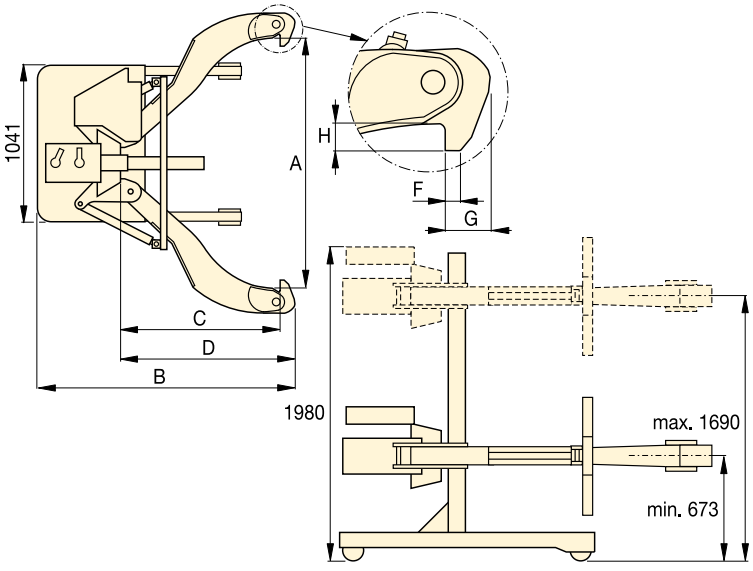

▼ *The EPH1002E quickly and easily removes this drive coupler from its shaft.*



Number of Jaws	Spread Range ø A (mm)	Capacity ton (kN)	Model Number	Cylinder Stroke (mm)	Overall Length B (mm)	Reach C (mm)	Jaw Length D (mm)	Jaw Width F (mm)	Tip Clearance G (mm)	Tip Depth H (mm)	(kg)
2	190 - 1778	**100** (980)	**EPH1002E**	250	1955	1219	1346	32	89	89	771
3	190 - 1778	**100** (980)	**EPH1003E**	250	1955	1219	1346	32	89	89	907

Enerpac Hydraulic Specialty Tools

ENERPAC

Enerpac offers an extensive range of dedicated tools for a variety of specific and flexible applications.

Whatever your requirement… cutting, punching, spreading or bending… you can be sure that Enerpac has the correct tool to do your job safely and efficiently.

Featuring maintenance sets, machine lifts and load skates, as well as hole punches, pipe benders, rail stressor and cable cutters, Enerpac has the tools to ensure that even your most demanding applications can be undertaken with the highest degree of safety and accuracy.

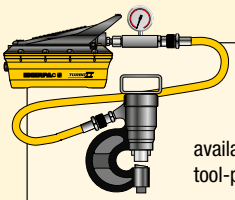

Tool-Pump Sets

Most hydraulic tools in this section are available in sets, for a perfect tool-pump match.

Hydraulic System Set-up

Check out our 'Yellow Pages' section for help on system set-ups and valving configurations.

Page: 400



Hydraulic, Electric and Manual Cutters

Enerpac Cutters can be found in the Cutter section of this catalog.

Page: 192



Bolting Tools

More Enerpac Tools you will find in our Bolting Tools section in this catalog.

Page: 210

Specialty Tools Section Overview

Capacity ton (kN)	Tool type and functions	Series	Page
2,5 - 12,5 (22 - 116)	**Maintenance Sets**	**MS**	 **174** ▶
35 - 50 (311 - 498)	**Punches** **Punch-Pump Sets**	**SP,** **MSP,** **STP**	 **178** ▶ **180** ▶
16 (157)	**Lifting Wedge**	**LW**	 **182** ▶
8,5 - 20 (75 - 178)	**Machine Lifts**	**SOH**	 **183** ▶
1 - 80 (8,9 - 712)	**Heavy-Duty Load Skates**	**ER, ES** **ELP**	 **184** ▶
19 - 453 litres	**Industrial Storage Cases**	**CM**	 **186** ▶
0,75 - 1,0 (6 - 8,9)	**Hydraulic Wedgie** **Spread Cylinders**	**A** **WR**	 **187** ▶
Nominal Pipe Bore ½ - 4 inch	**Pipe Bender Sets**	**STB**	 **188** ▶
70 (683)	**Hydraulic Rail Stressor**	**RP**	 **190** ▶

MS-Series, Maintenance Sets

ENERPAC

▼ Shown: **MS210**



The Universal Hydraulic Tool Box

Maintenance Sets

Enerpac Maintenance sets are a complete assortment of hydraulic powered tools. Using these sets allows you to quickly configure a unique tool to meet your most difficult jobs.

Built around the Enerpac lightweight hand pump, hose and cylinder, these sets enable you to push, pull, lift, press, straighten, spread and clamp with forces up to 12,5 ton.

- **All sets include Enerpac pump, hose, cylinder and gauge**
- **Lock-on or threaded connectors**
- **Complete maintenance set for almost every maintenance application.**



More Information

For detailed information on all included attachments, see the next pages.

Page: 176



Clamping a workpiece is just one of the many applications for the Enerpac maintenance sets. ▶

▼ **QUICK SELECTION CHART**

Capacity using attachments* ton (kN)	Set Model Number						Number of Attachment Components	(kg)
2,5 (22)	**MS24**	P142	HC7206	RC55	GP10S	GA4	33	26
2,5 (22)	**MSFP5**	P142	HC7206	RC55	GP10S	GA4	24	20
5,0 (50)	**MSFP10**	P392	HC7206	RC106	G2535L	GA3	23	48
5,0 (50)	**MS210**	P392	HC7206	RC106	GP10S	GA2	35	63
12,5 (116)	**MS220**	P392	HC7206	RC256	GP10S	GA2	13	95
5,0-12,5 (50-116)	**MS21020**	P392	HC7206	RC102, 106, 256	GP10S	GA2	53	158

* If no attachments are being used, capacity is double these values. Maximum operating pressure is then 700 bar.

Universal Maintenance Sets

CAUTION!
When cylinders are used with maintenance set attachments or components, the maximum system pressure must be limited to half the rated pressure (350 bar).

WARNING!
Only use attachments provided with set. Non-Enerpac attachments and longer extension tubes will reduce column strength, potentially creating unsafe conditions.

MS Series



Capacity (using attachments):
2,5 - 12,5 ton

Maximum Operating Pressure:
350 bar

▼ **APPLICATION EXAMPLES**

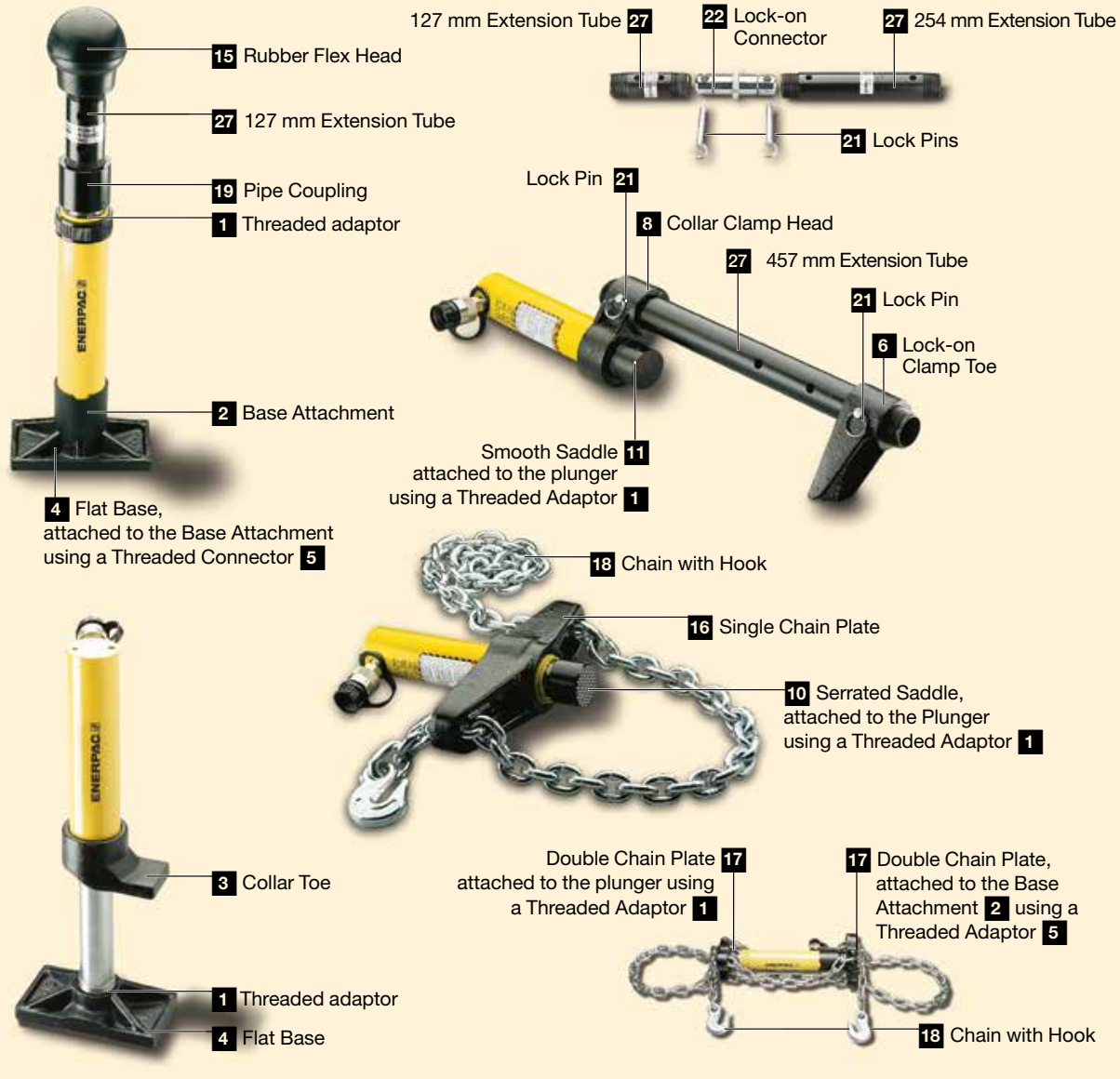

Tel: +45 63 12 83 00 | Email: ps@hymatik.com | www.hymatik.com | Hvidkaervej 27a, DK-5250 Odense SV, Denmark

MS-Series, Maintenance Sets

ENERPAC

CAUTION! When cylinders are used with maintenance set attachments or components, the maximum system pressure must be limited to half the rated pressure (350 bar).

Note: All dimensions in millimetres.

Set Model Number	MS24	MSFP5	MSFP10	MS210	MS220	MS21020
Base, Collar and Plunger Attachments	**2,5 ton**	**2,5 ton**	**5,0 ton**	**5,0 ton**	**12,5 ton**	**5,0 - 12,5 ton**
Cylinder Model(s)	**RC55**	**RC55**	**RC106**	**RC106**	**RC256**	**RC102, 106, 256**
1	A23	A23	A13	A13	A-28	A13, A28
2	A25	A25	A21	A21	A-27	A21, A27
3	A1034	A1034	A20	A20	A-595	A20, A595
4	MZ4010	MZ4010	A14	A14	A-243	A14, A243
5	A545	A545	A10	A10	–	A10 (2x)
6	–	–	–	A8	–	A8
7	A530	A530	A6	A6	–	A6
8	MZ4011	–	–	A192	–	A192
9	–	–	–	A305	–	A305
10	A531	A531	A18	A18	–	A18
11	–	–	–	A185	–	A185
12	A532	A532	A15	A15	–	A15
13	–	–	–	–	A-607	A607
14	A629	A629	A129	A129	–	A129
15	A539	A539	A128	A128	–	A128
Chains and Attachments for Pulling Applications	**2,5 ton**	**2,5 ton**	**5,0 ton**	**5,0 ton**	**12,5 ton**	**5,0 - 12,5 ton**
16	A558	–	–	A132	A238	A132, A238
17	–	–	–	A5 (2x)	–	A5 (2x)
18	A557 (2x)	–	–	A141 (2x)	A218 (2x)	A141 (2x),
						A18 (2x)
Extension Tubes, Connectors and Adaptors	**2,5 ton**	**2,5 ton**	**5,0 ton**	**5,0 ton**	**12,5 ton**	**5,0 - 12,5 ton**
19	A544	–	–	A19 (2x)	A242 (2x)	A19 (2x)
						A242 (2x)
20	WR5	WR5	WR5	A92	–	A92
21	MZ4013 (4x)	MZ4013 (4x)	A16 (4x)	A16 (4x)	–	A16 (4x)
22	MZ4007 (3x)	MZ4007 (3x)	MZ1050 (3x)	MZ1050 (2x)	–	MZ1050 (3x)
23	MZ4008 (2x)	–	–	MZ1051	–	MZ1051 (2x)
24	MZ4009	MZ4009	MZ1052	MZ1052	–	MZ1052
25	–	–	–	A285	–	A285
26	A650	–	–	–	–	–
27 Length (mm) 76	MZ4002	MZ4002	–	–	–	–
127	MZ4003	MZ4003	MZ1002	MZ1002	–	MZ1002
254	MZ4004	MZ4004	MZ1003	MZ1003	A239	MZ1003
254						A239
457	MZ4005 (2x)	MZ4005	MZ1004	MZ1004	A240	MZ1004 (2x)
457						A240
584	MZ4006	MZ4006	–	–	–	–
762	–	–	MZ1005	MZ1005	A241	MZ1005 (2x)
762	–	–	–	–	–	A241
28 Storage Case	CM6	CM6	CW350	CW350	CW350	CW750
Set Weight (kg)	26	20	48	63	95	158

Base, Collar and Plunger Attachments

1 Threaded Adaptor



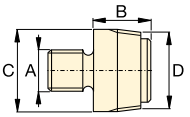

ton	Model Nr.	A	B	C	D
2,5	A23	¾"- 16 UN	28	26	¾"- 14 NPT
5,0	A13	1"- 8 UN	31	42	1¼"- 11½ NPT
12,5	A28	1½"- 16 UN	47	69	2"- 11½ NPT

2 Base Attachment



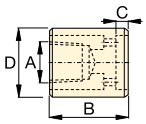

ton	Model Nr.	A	B	C	D
2,5	A25	¾"- 14 NPT	50	12	44
5,0	A21	1¼"- 11½ NPT	57	12	65
12,5	A27	2"- 11½ NPT	63	12	98

3 Collar Toe



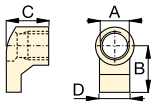

ton	Model Nr.	A	B	C	D
2,5	A1034	1½"- 16 UN	54	50	31
5,0	A20	2¼"- 14 UN	80	57	57
12,5	A595	3⁵/₁₆"- 12 UN	103	51	80

4 Flat Base



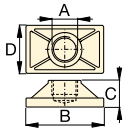

ton	Model Nr.	A	B	C	D
2,5	MZ4010	¾"- 14 NPT	114	31	63
5,0	A14	1¼"- 11½ NPT	165	35	88
12,5	A243 *	2"- 11½ NPT	165	58	165

* A243 is a round base model.

5 Threaded Connector



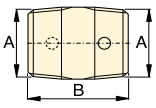

ton	Model Nr.	A	B
2,5	A545	¾"- 14 NPT	35
5,0	A10	1¼"- 11½ NPT	41

6 Lock-on Clamp Toe



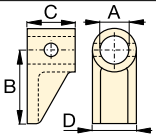

ton	Model Nr.	A	B	C	D
5,0	A8	43	105	50	57

Universal Maintenance Sets, MS-Series

7 Threaded Plunger Toe


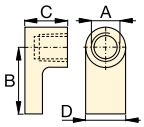

ton	Model Nr.	A	B	C	D
2,5	A530	¾"- 14 NPT	57	25	33
5,0	A6	1¼"- 11½ NPT	82	31	57

8 Collar Clamp Head


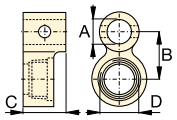

ton	Model Nr.	A	B	C	D
2,5	MZ4011	¾"-14 NPT	49	76	1½"-16 UN
5,0	A192	42	63	50	2¼"-14 UN

9 Spreader Toe


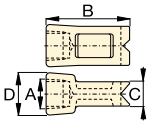

ton	Model Nr.	A	B	C	D
5,0	A305	1¼"-11½ NPT	114	25	50

10 Serrated Saddle


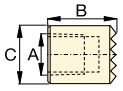

ton	Model Nr.	A	B	C
2,5	A531	¾"- 14 NPT	27	31
5,0	A18	1¼"- 11½ NPT	38	50

11 Smooth Saddle


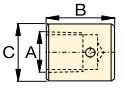

ton	Model Nr.	A	B	C
5,0	A185	1¼"- 11½ NPT	38	50

12 90° V-Base


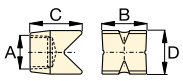

ton	Model Nr.	A	B	C	D
2,5	A532	¾"- 14 NPT	38	47	25
5,0	A15	1¼"- 11½ NPT	54	57	54

13 Plunger Base


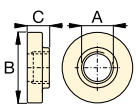

ton	Model Nr.	A	B	C
12,5	A607	2"-11½ NPT	166	38

14 Wedge Head


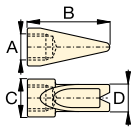

ton	Model Nr.	A	B	C	D
2,5	A629	¾"- 14 NPT	69	33	28
5,0	A129	1¼"- 11½ NPT	101	50	44

15 Rubber Flex Head


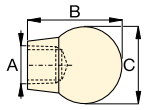

ton	Model Nr.	A	B	C
2,5	A539	¾"-14 NPT	44	69
5,0	A128	1¼"-11½ NPT	86	86

Chains and Attachments for Pulling

16 Single Chain Plate


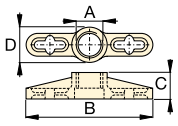

ton	Model Nr.	A	B	C	D
2,5	A558	1½"- 16 UN	196	39	44
5,0	A132	2¼"- 14 UN	307	63	79
12,5	A238	3 5/16"- 12 UN	450	102	125

17 Double Chain Plate


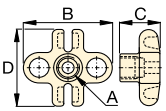

ton	Model Nr.	A	B	C	D
5,0	A5	1¼"-11½ NPT	130	50	126

18 Chain with Hook



ton	Model Nr.	Chain Length
2,5	A557	1,5 metres
5,0	A141	1,8 metres
12,5	A218	2,4 metres

Tubes, Connectors and Adaptors

19 Pipe Coupling


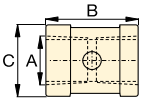

ton	Model Nr.	A	B	C
2,5	A544	¾"- 14 NPT	42	33
5,0	A19	1¼"- 11½ NPT	49	54
12,5	A242	2"- 11½ NPT	88	82

20 Spreader


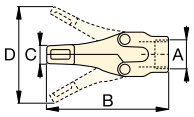

ton	Model Nr.	A	B	C	D
1,0	WR5	–	223	12,8	94
1,0	A92	2¼"-14 UN	244	35	158

21 Lock Pin


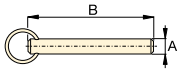

ton	Model Nr.	A	B
2,5	MZ4013	7,9	41
5,0	A16	11,2	82

22 Lock-on Connector


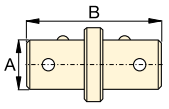

ton	Model Nr.	A	B
2,5	MZ4007	19	79
5,0	MZ1050	33	127

23 Male Lock-on Adaptor


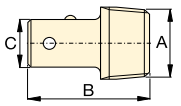

ton	Model Nr.	A	B	C
2,5	MZ4008	¾"-14 NPT	60	19
5,0	MZ1051	1¼"-11½ NPT	90	33

24 Female Lock-on Adaptor


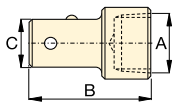

ton	Model Nr.	A	B	C
2,5	MZ4009	¾"-14 NPT	65	19
5,0	MZ1052	1¼"-11½ NPT	96	33

25 Adjustable Extension


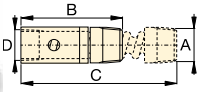

ton	Model Nr.	A	B	C	D
5,0	A285	1¼"-11½ NPT	335	441	33

26 Slip-on Extension


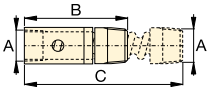

ton	Model Nr.	A	B	C
2,5	A650	¾"- 14 NPT	200	365

SP-Series, Lightweight Hydraulic Punch

ENERPAC

▼ Shown: **SP35S**



Much Faster than Drilling



Tool Kit SPK10

Included with all 35 Ton punches, this tool kit is used to remove and install the punch into the head. Can be ordered as a replacement under model number **SPK10**.



Ordering Information

The 35 ton hydraulic Punch may be ordered by itself or as a set, including a pump.
A punch or die may also be ordered separately or as a matched set. Please refer to the Quick Selection Chart information on top of the next page.

- **12,7 mm thick capacity through mild steel**
- **Round, oblong and square punches and dies are available to solve your punching applications**
- **Long life Enerpac single-acting, spring return design**
- **Durable steel case keeps tools and dies together and provides for easy carrying and storage**
- **CR400 coupler included.**

▼ *SP-Series, Lightweight Hydraulic Punch – Much Faster than Drilling.*



▼ **STANDARD PUNCHES AND DIES SELECTION CHART**

Hole Shape	Imperial [1] (inch)		Metric [1] (mm)	
	Hole Size	Bolt Size	Hole Size	Bolt Size
●	0,31	1/4	7,9	–
●	0,38	5/16	9,5	M8
●	0,44	3/8	11,1	M10
●	0,53	7/16	13,5	M12
●	0,56	1/2	14,3	–
●	0,69	5/8	17,5	M16
●	0,78	–	19,8	M18
●	0,81	3/4	20,6	–
■	0,31	1/4	7,9	–
■	0,38	5/16	9,5	M8
■	0,44	3/8	11,1	M10
■	0,50	7/16	12,7	M12
▬	.31 x .75	1/4	7,9 x 19	–
▬	.38 x .75	5/16	9,5 x 19	M8
▬	.44 x .75	3/8	11,1 x 19	M10
▬	.50 x .75	7/16	12,7 x 19	M12

[1] Material thickness should not exceed hole diameter

Single-Acting, Spring Return Hydraulic Punch

▼ QUICK SELECTION CHART

Included						Model Number	
*	Punch & Die Set	Pump	Hose	Gauge	Gauge Adaptor		(kg)
SP35	Standard**	P392	HC7206	GP10S	GA2	**STP35H**	25
SP35	Standard**	PATG1102N	HC7206	GP10S	GA2	**STP35A**	29
SP35	–	–	–	–	–	**SP35**	16
SP35	Standard**	–	–	–	–	**SP35S**	18
SP35	Standard**	PUD1100E	HC7206	–	–	**SP35SPE**	29
SP35	Metric***	–	–	–	–	**MSP351**	21
SP35	Metric***	PUD1100E	HC7206	–	–	**MSP351PE**	32

* Punch oil capacity: 76 cm^3
Includes the following punch and die sets:
** SPD438, SPD688, SPD563 and SPD813
*** SPD375, SPD531, SPD438 and SPD688

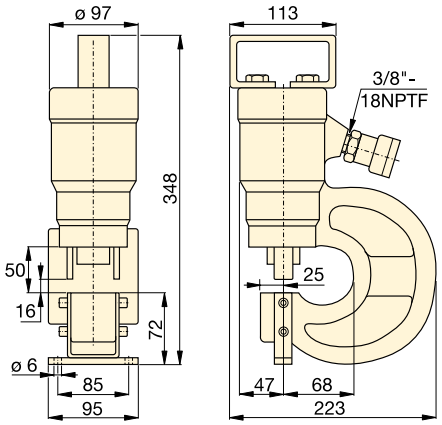

Model Nr. Standard Punch & Die Set	Maximum allowable material thickness to be punched (mm) Material thickness should not exceed hole diameter										
	1)	2)	3)	4)	5)	6)	7)	8)	9)	10)	11)
SPD313	7,9	7,9	6,4	6,4	6,4	6,4	3,3	4,8	6,4	6,4	6,4
SPD375	9,7	9,7	7,9	7,9	7,9	7,9	4,8	6,4	7,9	7,9	7,9
SPD438	11,2	11,2	9,7	9,7	9,7	7,9	4,8	7,9	7,9	7,9	7,9
SPD531	12,7	12,7	11,2	11,2	11,2	9,7	6,4	7,9	9,7	9,7	9,7
SPD563	12,7	12,7	12,7	11,2	12,7	11,2	6,4	9,7	11,2	11,2	11,2
SPD688	12,7	12,7	12,7	11,2	12,7	10,2	6,4	7,9	10,2	10,2	10,2
SPD781	12,7	12,7	12,7	11,2	12,7	9,7	6,4	7,9	9,7	9,9	9,7
SPD813	12,7	12,7	12,7	11,2	12,7	7,9	4,8	7,9	7,9	7,9	7,9
SPD458	7,9	7,9	6,4	6,4	6,4	6,4	3,3	4,8	6,4	6,4	6,4
SPD549	9,7	9,7	7,9	7,9	7,9	7,9	4,8	6,4	7,9	7,9	7,9
SPD639	11,2	11,2	9,7	9,7	9,7	7,9	4,8	7,9	7,9	7,9	7,9
SPD728	12,7	12,7	11,2	11,2	11,2	9,7	6,4	7,9	9,7	9,7	8,6
SPD106	7,9	7,9	6,4	6,4	6,4	6,4	3,3	4,8	6,4	6,4	6,4
SPD125	9,7	9,7	7,9	7,9	7,9	7,9	4,8	6,4	7,9	7,9	7,9
SPD188	11,2	11,2	9,7	9,7	9,7	7,9	4,8	7,9	7,9	7,9	7,9
SPD250	12,7	12,7	11,2	11,2	11,2	9,7	6,4	7,9	9,7	9,7	9,7

MSP SP STP Series



Capacity:
35 ton

Hole Sizes:
7,9 - 20,6 mm

Maximum Operating Pressure:
700 bar

CAUTION!
The chart below is for reference only! Maximum allowable material thickness to be punched varies with set wear.

CAUTION!
Material thickness should not exceed hole diameter.

Steel Qualities (see table):

1) Mild A-7
2) Boiler Plate
3) Structural A-36
4) Struct Corten (ASTM A242)
5) Cold Rolled C-1018
6) Hot Rolled C-1050
7) Hot Rolled C-1095
8) Hot Rolled C-1095 Annealed
9) Stainless Annealed
10) Stainless 304 Hot Rolled
11) Stainless 316 Cold Rolled

▼ *The hydraulic punch cuts the time spent forming holes.*



Tel: +45 63 12 83 00 | Email: ps@hymatik.com | www.hymatik.com | Hvidkaervej 27a, DK-5250 Odense SV, Denmark

SP-Series, 50 Ton Hydraulic Punch

ENERPAC

▼ Shown: **SP50100**



- **Available as a complete set including electric pump and hoses**
- **Double-acting cylinder design for fast cycle times**
- **Punch and die changeover tools included**
- **Lifting bracket included**
- **Adjustable power stripper prevents movement of the metal during stripping**
- **CR400 female couplers included.**

Cuts the Time Spent Forming Holes



Depth Stop

For simplified repetitive punching applications an adjustable Depth Stop is available.Order model number: **SP110**.



Foot Mounting Kit

A foot mounting kit for easy mounting of the 50 ton punch to workbench or fixture is available. Order model number: **SP120**.



Ordering Information

The 50-ton Hydraulic Punch may be ordered by itself or as a set with an electric pump. A punch and die may be ordered as a matched set. Please refer to the selection chart information.



◀ *Save time using the 50-ton Enerpac Punch.*

▼ *Shown below is the 50 ton punch with SP120 and SP110 assembled.*



50 Ton Double-Acting Hydraulic Punch

▼ QUICK SELECTION CHART PUNCH SETS

Included				Set Model Number	
Model Number Punch*	Punch & Die Sets	Electric Pump	Hydraulic Hose (2x)		(kg)
SP50	All **	–	–	**SP50100**	116
SP50	All **	ZE4410SE	HC7206	**SP5000E**	174

* Punch Oil Capacity:
Advance: 278 cm^3
Retract: 229 cm^3

** All standard sets from chart below.

SP Series



Capacity:
50 ton (490 kN)

Hole Sizes:
13,5 - 26,2 mm

Maximum Operating Pressure:
700 bar

CAUTION!
Material thickness should not exceed hole diameter.

CAUTION!
Chart below is for reference only! Maximum allowable material thickness to be punched varies with set wear.

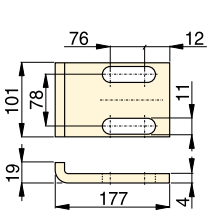

SP110

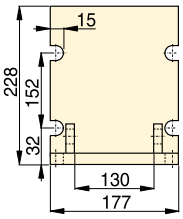

SP120

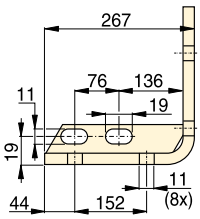

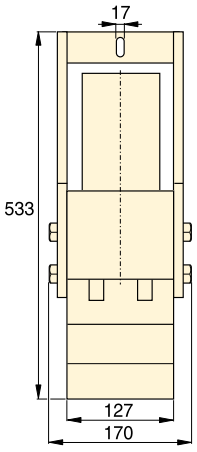

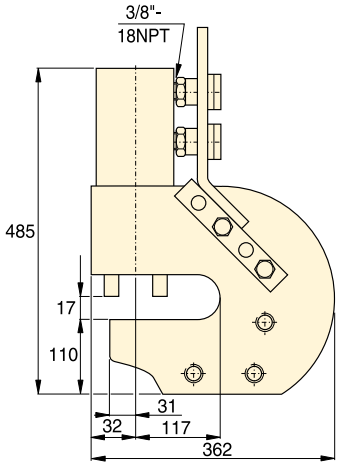

SP50

Steel Qualities (see table below):

1) Mild A-7
2) Boiler Plate
3) Structural A-36
4) Struct Corten (ASTM A242)
5) Cold Rolled C-1018
6) Hot Rolled C-1050
7) Hot Rolled C-1095
8) Hot Rolled C-1095 Annealed
9) Stainless Annealed
10) Stainless 304 Hot Rolled
11) Stainless 316 Cold Rolled

▼ STANDARD PUNCH AND DIE SELECTION CHART

Hole Shape	Hole Size (mm)	Bolt Size (mm)	Model Numbers Standard Punch and Die Set	Maximum Allowable Material Thickness To Be Punched (mm)										
				1)	2)	3)	4)	5)	6)	7)	8)	9)	10)	11)
●	13,5	M12	**SP150**	13,5	13,5	13,5	13,5	13,5	12,4	8,1	10,2	12,4	12,4	12,4
●	16,7	M16	**SP170**	–	–	–	–	–	13,0	8,1	10,2	13,0	13,0	13,0
●	19,8	M18	**SP190**	–	–	–	–	–	12,4	8,1	10,2	12,4	12,7	12,4
●	23,1	M20	**SP121**	14,2	14,2	14,2	12,7	14,2	8,9	5,6	8,9	8,9	8,9	8,9
●	26,2	M24	**SP123**	14,2	14,2	14,2	11,2	14,2	7,9	4,8	7,9	7,9	7,9	7,9

Tel: +45 63 12 83 00 | Email: ps@hymatik.com | www.hymatik.com | Hvidkaervej 27a, DK-5250 Odense SV, Denmark

LW-Series, Hydraulic Vertical Lifting Wedges

ENERPAC

▼ Shown: **LWC16, LW16 with SB2 and optional LWB1**



LW Series

Maximum Lifting Force:
16 ton (157 kN)

Minimum Clearance:
10 mm

Maximum Lift Height *:
51 - 69 mm

Maximum Operating Pressure:
700 bar

* Using Stepped Block LWB1



Power Box
Tool box with hand pump, gauge adaptor assembly, hose and LW16.

Page: 65



Control Manifolds
Control Manifold to control two or four LW16 lifting wedges simultaneously.

AM21 with 3 ports 3/8" NPTF
AM41 with 5 ports 3/8" NPTF.

Page: 132

- **Integrated hand pump offers greater maneuverability (LWC16 only)**
- **Minimized access gap for greater accessibility on applications with limited insertion space**
- **Secure, stable lifting and lowering motion with no slippage**
- **Single-acting spring return cylinder allows for automatic, mechanical retraction**
- **Includes safety block SB2**
- **LW16 can be used in multiple set-up.**

▼ *For lifting heavy equipment with minimum floor clearance the LW16 is the ideal tool.*



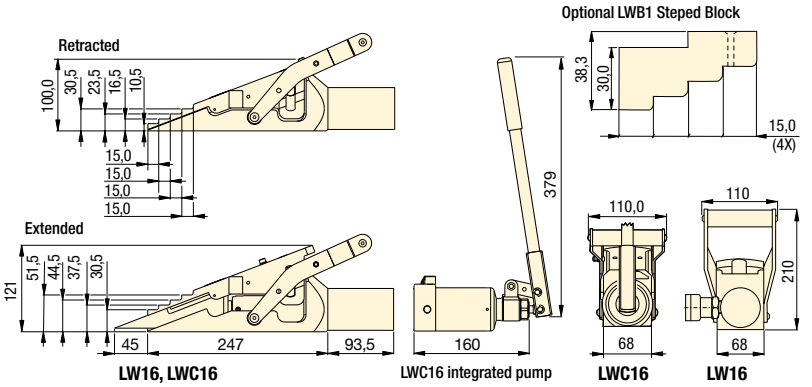

Max. Lifting Force ton (kN)	Model Number	Minimum Clearance Gap (mm)	Max. Lift per Stage (mm)	Max. Lifting Height (mm)	Max. Lifting Height using Stepped Block LWB1 (mm)	Oil Capacity (cm^3)	Pump Power Source	(kg)
16 (157)	LW16 [1]	10	21	51,5	69	78	External	7,0
	LWC16 [2]					–	Integrated	10,0

[1] Includes SB2
[2] Includes SB2, LWB1, and carrying case.

Hydraulic Machine Lifts

▼ SOH10-6



SOH Series

Lifting Capacity:
8,5 - 20 ton

Stroke:
136 - 157 mm

Toe Clearance:
20 mm

Maximum Operating Pressure:
700 bar

- **For lifting heavy equipment with minimum available access**
- **Remote hydraulic pump enhances safety**
- **Low height lifting toe**
- **Precision guided to reduce friction and isolate cylinder from side-loads**
- **Two extendable support feet provide extra stability**
- **Includes RC-Series cylinder with CR400 coupler.**



RSM-Series, Low-Height Cylinders

Low height, single-acting spring-return cylinders are ideal for space restricted applications.

Page: 26



Load Skates

In combination with the Enerpac Machine Lifts we recommend Load Skates for moving heavy loads.

Page: 184

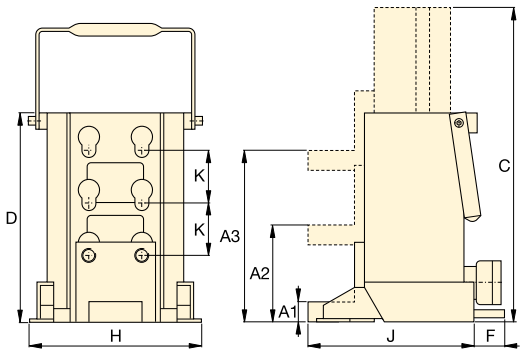

▼ *Limited access under this machine makes the Enerpac hydraulic machine lift the perfect solution.*



Capacity ton (kN)	Toe Clearance (mm) Minimum A1	Central A2	Maximum A3	Stroke (mm)	Model Number	Oil Capacity (cm^3)	Dimensions (mm) Total Ext. Height C	Total Body Height D	F	H	J	K	(kg)
8,5 (75)	20	95	169	136	**SOH10-6**	224	430	294	–	190	214	74	26
20 (178)	30	110	190	157	**SOH23-6**	525	472	320	65	265	250	80	45

ER-Series, Heavy Duty Load Skates

ENERPAC

▼ Shown: **Set ERS20**



Move Heavy Loads Easily and Safely

- **Rugged and sturdy construction for long life**
- **Low profile construction for increased stability**
- **Low rolling-resistance allows for easy transportation**
- **Attachable load leveling plates and swivel turntables for turning corners.**

Sets (see table) include all components necessary to handle a variety of applications.

Two **ELB1** link-up bars, two **ERH1** handles (875 mm long) and one **EMB1** metal box are included.

Optional long handle **ERH2** (1180 mm) available for 60 and 80 ton only.



Lifting Wedges and Machine Lifts

To place the Load Skates, the load must first be lifted. This can be done easily and safely using the Enerpac Lifting Wedge or Machine Lifts.

Page: 182

▼ *Heavy transport using Load Skates. The machine is first lifted, using SOH-Series Enerpac Machine Lifts.*



▼ *Chemical tank transportation: The first few centimetres the load was lifted with RCS-Series low height cylinders and then moved on to load skates for transportation.*



Heavy Duty Caterroller™ Load Skates

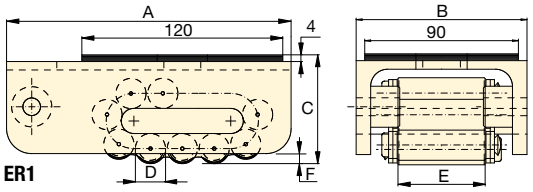

ER1

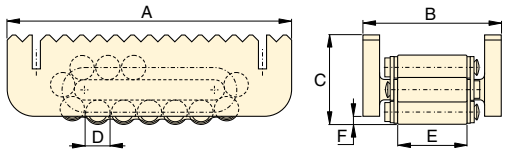

ER10, ER15, ER30

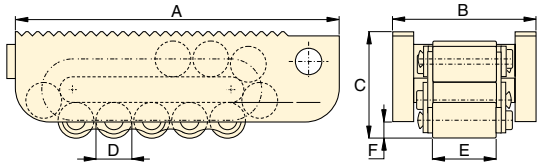

ER60, ER80

EL
ER
ES
Series



Maximum Carrying Capacity:
80 ton (711 kN)

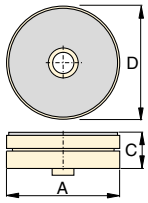

ES1,
Turntable Swivel

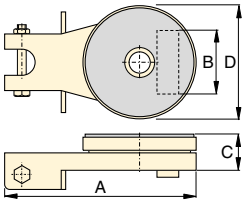

ES10, ES15, ES30
Turntable Swivel

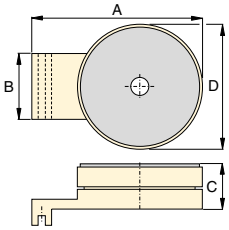

ES60, ES80 ,
Turntable Swivel

Load Skates may be ordered separately or as a matched set.

Set Capacity * ton (kN)	Set Model Number	Load Skates (4x)	Turntable Swivels (2x)	Leveling Plates (2x)	Weight including handles and metal box (kg)
			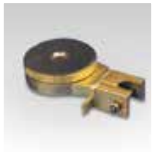	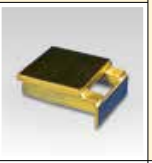	
20 (178)	**ERS20**	ER10	ES10	ELP10	49
30 (267)	**ERS30**	ER15	ES15	ELP15	55
60 (533)	**ERS60**	ER30	ES30	ELP30	75

* Sets are designed to enable two skates to take full load for extra safety on uneven floor surfaces

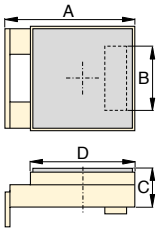

ELP10, ELP15, ELP30
Levelling Plate

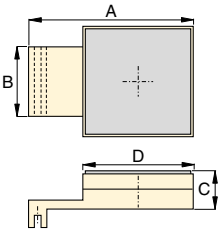

ELP60, ELP80
Levelling Plate

	Capacity ton (kN)	Model Number	Dimensions (mm) A	B	C	D	E	F	Contact Rolls per Skate	Rollers per Skate	(kg)
Load Skates	**1** (8,9)	**ER1**	170	100	65	18	51	6	4	11	3,8
	10 (89)	**ER10**	210	102	66	18	51	6	5	15	5,2
 ER1 ER10	**15** (133)	**ER15**	220	115	75	24	60	10	4	13	7,3
	30 (267)	**ER30**	270	130	92	30	68	10	4	13	13,0
	60 (533)	**ER60**	380	168	125	42	76	16	4	13	31,9
	80 (711)	**ER80**	530	182	145	50	86	19	6	17	60,9
Turntable Swivel	**1** (8,9)	**ES1**	207	–	26	90	–	–	–	–	1,1
	10 (89)	**ES10**	220	73	42	130	–	–	–	–	3,7
 ES1 ES10	**15** (133)	**ES15**	220	86	42	130	–	–	–	–	3,7
	30 (267)	**ES30**	250	96	48	150	–	–	–	–	5,3
	60 (533)	**ES60**	275	114	61	190	–	–	–	–	13,7
	80 (711)	**ES80**	360	128	61	220	–	–	–	–	18,9
Levelling Plate	**10** (89)	**ELP10**	149	73	42	120	–	–	–	–	3,7
	15 (133)	**ELP15**	149	86	42	120	–	–	–	–	3,7
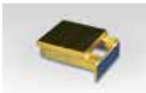	**30** (267)	**ELP30**	178	96	48	130	–	–	–	–	5,3
	60 (533)	**ELP60**	270	114	61	180	–	–	–	–	13,8
	80 (711)	**ELP80**	350	128	61	200	–	–	–	–	18,8

CM-Series, Industrial Storage Cases

ENERPAC

▼ CM16



CM
Series

Case Size:
19 - 453 litres

Protect your Equipment

- **Protect your equipment from dust, water, grease and dirt**
- **Reduce losses on the jobsite, maintenance area or shop**
- **Durable steel, painted with rust-resistant primer and finished in durable enamel**
- **Heavy duty hinges and lifting handles**
- **Lockable.**

Maintenance Sets

Enerpac Maintenance sets are a complete assortment of hydraulic powered tools.

Using these sets allows you to quickly configure a unique tool to meet your most difficult jobs.

Built around the Enerpac lightweight hand pump, hose and cylinder, these sets enable you to push, pull, lift, press, straighten, spread and clamp with forces up to 12,5 ton.

Page: 174



Hydraulic Pullers

These hydraulic pullers eliminate time-consuming and unsafe hammering, heating or prying. Damage to parts is minimized through the use of controlled hydraulic power.

Page: 157

▼ *When not storing the lifting system, this heavy-duty storage case doubles as a work station.*



Case Size (litres)	Model Number	Inside Dimensions L x W x H (mm)	Thickness (mm)	(kg)
19	**CM6**	597 x 178 x 203	0,9	7
32	**CM1**	622 x 282 x 165	0,9	8
127	**CM4**	778 x 454 x 354	1,5	16
212	**CM7**	1210 x 387 x 457	1,9	57
453	**CM16**	1216 x 606 x 557	1,5	55

Hydraulic Wedgie and Spread Cylinders

▼ Shown clockwise from top: **WR15, WR5, A92**



- **WR5: For use in very confined work areas**
- **WR15: For long stroke spreading applications**
- **Single-acting, spring return**
- **A92: Spreader attachment; threads on 10 ton RC-Series cylinders * (except RC101).**

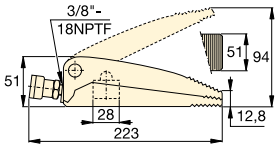

WR5

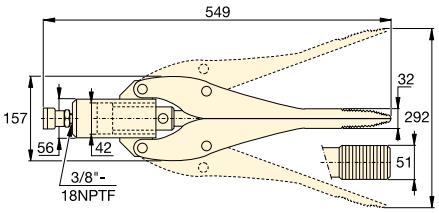

WR15

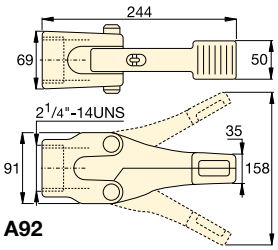

A92

Cylinder Capacity ton (kN)	Tip Clearance (mm)	Model Number	Maximum Spread (mm)	Cylinder Effective Area (cm^2)	Oil Capacity (cm^3)	(kg)
1,0 (8,9)	12,8	**WR5**	94	6,5	10	2,3
0,75 (6)	32,0	**WR15**	292	14,5	64	11,3
1,0 (8,9)	35,0	**A92 ***	158	–	–	3,6

* Maximum system pressure must be limited to half the rated pressure (350 bar).

A WR Series



Capacity:
0,75 - 1,0 ton

Tip Clearance:
12,8 - 35 mm

Maximum Spread:
94 - 292 mm

Maximum Operating Pressure:
700 bar



RC-Series Cylinders
10 ton RC-Series cylinders (except RC-101) fit into A92 Spreader Attachment.
Page: 6



Power Box
Tool box with **P392** hand pump, gauge adaptor assembly, hose and **WR5**.
Page: 65



Best Match Hand Pump
To power your WR5 and WR15 the **P392** hand pump is an ideal choice. Use Enerpac H700-Series hose (page 128) for hydraulic connection.
Page: 76

▼ *A WR5 wedgie cylinder is used to loosen a bridge bearing.*



Tel: +45 63 12 83 00 | Email: ps@hymatik.com | www.hymatik.com | Hvidkaervej 27a, DK-5250 Odense SV, Denmark

STB-Series, Pipe Bender Sets

ENERPAC

▼ Shown: **STB101H**



Quick, Safe and Wrinkle-free Bending

'One Shot' and 'Sweep'

One shot shoes give up to a 90° bend without resetting.

Sweep shoes are used where increasing radii are required for multiple parallel pipe installations.

- **Makes smooth, wrinkle-free bends**
- **Sets include genuine Enerpac cylinder, hose, air, electric or hand pump**
- **Sets are also available without hydraulics**
- **Bending shoes and frame are lightweight, heat-treated aluminium**
- **All sets include sturdy steel storage case**
- **All sets include BZ12091 angle indicator for accurate bending**
- **BZ12377 Shoe Lock Pin included in every set**
- **Eject-O-Matic™ benders (STB202 models) have double-acting cylinder to eject pipe from the bending shoe.**

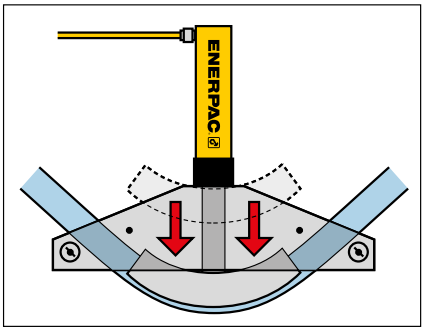

▲ *Typical one shot bending operation.*

▼ SELECTION CHART

Pipe Range Nominal Size (inch)		Bender Set Model Number	Hand Pump *	Air Pump *	Electric Pump *		Cylinder *	Hose *	Saddle *	
										(kg)
One Shot	Sweep									
½ - 2	–	**STB101X**	–	–	–	–	–		A12	40
		STB101N	–	–	–	–	RC1010	HC7206	A12	48
		STB101H	P392	–	–	–	RC1010	HC7206	A12	52
		STB101A	–	PATG1102N	–	–	RC1010	HC7206	A12	54
		STB101E	–	–	PUJ1200E [2]	–	RC1010	HC7206	A12	57
1 - 2	2½ - 4	**STB221X**	–	–	–	–	–		A29	104
		STB221N	–	–	–	–	RC2510	HC7206	A29	119
		STB221H	P80	–	–	–	RC2510	HC7206	A29	130
1¼ - 4	–	**STB202X** [1]	–	–	–	–	–		A29	143
		STB202N [1]	–	–	–	–	RR3014	HC7206 (2x)	A29	174
		STB202E [1]	–	–	–	ZU4408SE [2]	RR3014	HC7206 (2x)	A29	212

* See corresponding sections in this catalog for more detailed specifications.

[1] Eject-O-Matic™

[2] For 115 volt applications replace the last digit of Set Model Number and pump from 'E' to 'B'.

Pipe Bender Sets

Nominal Pipe Size (inch)	Wall Thick-ness (mm)	Sche-dule Pipe *	Pipe Bend Inside Radius (inch)	STB101 ø ½ - 2" One Shot	STB221 ø 1 - 2" One Shot Ø 2¼ - 4" Sweep	STB202 ø 1¼ - 4" One Shot	One Shot Bending Shoe Model Number	Sweep Bending Shoe Model Number
½	2,8	40	2⅞	Yes	–	–	BZ12011	–
	3,7	80		Yes	–	–		
	4,7	160		WS *	–	–		
	7,5	DEH		WS *	–	–		
¾	2,9	40	4	Yes	–	–	BZ12021	–
	3,9	80		Yes	–	–		
	5,5	160		WS *	–	–		
	7,8	DEH		WS *	–	–		
1	3,4	40	5⅛	Yes	Yes	–	BZ12031	–
	4,5	80		Yes	Yes	–		
	6,4	160		WS *	WS *	–		
	9,1	DEH		–	WS *	–		
1¼	3,6	40	6 7/16	Yes	Yes	Yes	BZ12041	–
	4,9	80		Yes	Yes	Yes		
	6,4	160		WS *	WS *	Yes		
	8,7	DEH		–	WS *	WS *		
1½	3,7	40	7 5/16	Yes	Yes	Yes	BZ12051	–
	5,1	80		Yes	Yes	Yes		
	7,1	160		WS *	WS *	Yes		
	10,2	DEH		–	WS *	WS *		
2	3,9	40	8 5/16	–	Yes	Yes	BZ12061	–
	5,5	80		–	Yes	Yes		
	8,7	160		–	WS *	Yes		
2½	5,2	40	9½	–	Yes	Yes	BZ12341	BZ12382
	7,0	80		–	WS *	Yes		
	9,5	160		–	WS *	Yes		
3	5,5	40	11¼	–	Yes	Yes	BZ12351	BZ12383
	7,6	80		–	WS *	Yes		
3½	5,7	40	15½	–	Yes	Yes	BZ12391	BZ12384
	8,1	80		–	WS *	Yes		
4	6,0	40	17¾	–	Yes	Yes	BZ12392	BZ12385
	8,6	80		–	–	Yes		

STB Series



Nominal Pipe Size:
ø ½ - 4 inch

Maximum Bending:
90°

Maximum Operating Pressure:
700 bar

*** Schedule Pipe**

All bender sets are designed to bend mild steel pipe. For other material please consult Enerpac.

40 = Standard;

80 = Extra Heavy;

160 = Double Extra Heavy;

DEH = Double Extra Heavy (slightly thicker than 160);

WS = Can be bent using wider spacing for swivel shoes.

Frame Assembly	Pivot Pins (2x)	Pivot Shoes (2x)	Bending Shoes included (Shoes with [3] are Sweep, all other shoes are One Shot)								Bender Set Model Number
BZ12371	BZ12375	BZ12071	BZ12011	BZ12021	BZ12031	BZ12041	BZ12051	BZ12061	–	–	STB101X
											STB101N
											STB101H
											STB101A
											STB101E
BZ12372	BZ12376	BZ13401	BZ12031	BZ12041	BZ12051	BZ12061	BZ12382[3]	BZ12383[3]	BZ12384[3]	BZ12385[3]	STB221X
											STB221N
											STB221H
BZ12374	BZ12376	BZ13401		BZ12041	BZ12051	BZ12061	BZ12341	BZ12351	BZ12391	BZ12392	STB202X[1]
											STB202N[1]
											STB202E[1]

RP-Series, Hydraulic Rail Stressor

ENERPAC

▼ RP70A, Hydraulic Rail Stressor



Hydraulic Rail Stressor

- Modular 70 ton stressor and holds the rail in neutral length during the welding process
- Easy to assemble in less than 2 minutes
- Certified lifting eyes mounted directly on the clamps for easy and safe lifting
- Designed with new aluminum lightweight cylinders including protection sleeves over the rods to extend durability

ZC3-Series, Battery Powered Stressing Pumps *(see page 191)*

- Zero emission hydraulic power pack
- Advanced brushless motor and Lithium-ion battery
- Steel manual operating valve with pressure hold function
- Safety key to safely leave the pump unattended during breaks
- Pressure release valve V182 included.

Lightweight & Modular Rail Stressing System

RP70A Rail Stressor

The Enerpac RP70A is a lightweight rail stressing kit for railway maintenance crews who assemble and install the rail puller directly on site.

The durable, easy-to-assemble components, stored and protected in a specially designed steel cage during transport, are up to 3 times lighter than similar tools.

The less physically demanding Enerpac RP70A is compatible with the cordless Enerpac ZC3-Series pump for a complete clean energy solution.

Certificate of Acceptance PA05-06958

Both RP70A Hydraulic Rail Stressor and ZC3 Stressing Pump are certified by Network Rail.



Durability

Double-acting aluminium cylinders are enclosed within steel sleeves protecting the cylinder rods from damage, particularly weld splatter and extends the life of the unit.



◀ *Complete system with RP70A Hydraulic Rail Stressor and ZC3 cordless stressing pump.*

Tel: +45 63 12 83 00 | Email: ps@hymatik.com | www.hymatik.com | Hvidkaervej 27a, DK-5250 Odense SV, Denmark

Hydraulic Rail Stressor & Cordless Powerpack

RP70A Rail Stressor

The RP70A Hydraulic Rail Stressor is used to pull together heavy railroad tracks for stressing and thermite welding.

In the rail industry ergonomic managers specify that tools over 29 kg should be modular and be able to be manually assembled/transported on site.

The RP70A can be used with the battery powered pump. The stressor is interchangeable with other type of powerpacks. The RP70A adjusts the gap between rail ends for rail stressing, rail welding, repairing rail failures and servicing insulators.

RP Series



Rated Pulling/Pushing Capacity:
70 / 45 ton

Stroke:
205 mm

Maximum Operating Pressure:
580 bar

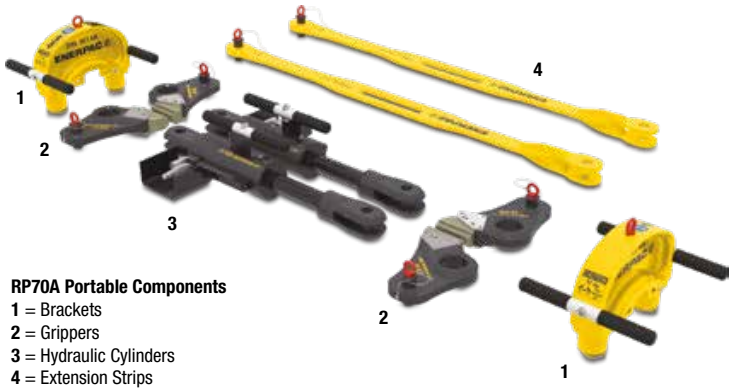

RP70A Portable Components
1 = Brackets
2 = Grippers
3 = Hydraulic Cylinders
4 = Extension Strips



Hydraulic Hoses

Use Enerpac hose model number **H9210-RS** 3,0 metres hydraulic hoses to ensure the integrity of your Rail Stressor system.

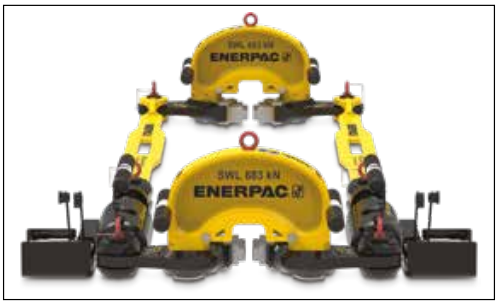

◀ *Modular 70 ton stressor and holds the rail in neutral length during the welding process.*



Battery Powered Stressing Pumps

- **Cordless, zero emission pump**
- **82V 4Ah Lithium-ion battery**
- **Roll cage and pressure gauge**
- **3-stage: 0,52 l/min at 580 bar**
- **4,0 litres useable oil capacity**
- **Pump weight 34,8 kg (excluding battery)**
- **Reduced Noise Level 80 dBA max**
- **Advanced brushless 1,0 kW motor.**

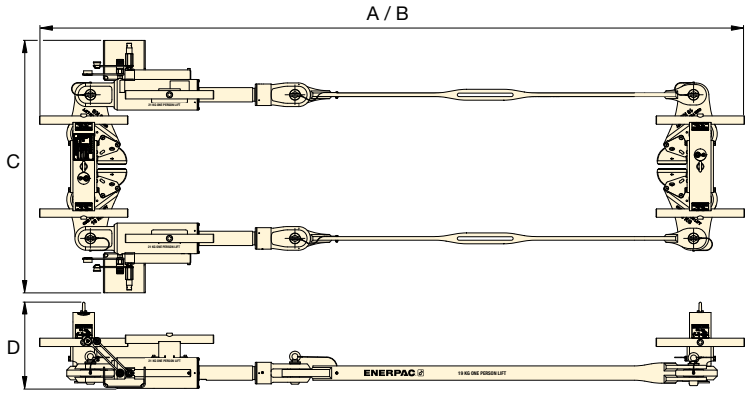

Capacity ton (kN) Pull	Capacity ton (kN) Push	Stroke (mm)	Model Number	Dimensions (mm) A	B	C	D	(kg)
70 (683)	**45** (440)	205	**RP70A**	2950	3155	1056	361	205

A = Closed length. B = Extended length

Model Number	Battery Charger (Volts)	Maximum Pressure (bar)
ZC3404JE-RS	230	580
ZC3404JB-RS	115	580

Hydraulic, Electric and Manual Cutters

ENERPAC

World-Class Cutters



When you need to make cuts through heavy-duty bar, chain, cable and similar materials, look no further than Enerpac's broad range of cutters.

An extensive line-up of hydraulic, electric and manual cutters provides a quick, safe and cost-effective solution for technicians from construction, mining, manufacturing and many other industries.

Enerpac's cutters are built to handle industrial-grade materials on a daily basis. Like all Enerpac tools, each cutter is designed and built to last in tough working conditions for a safer, simpler and more productive workflow.

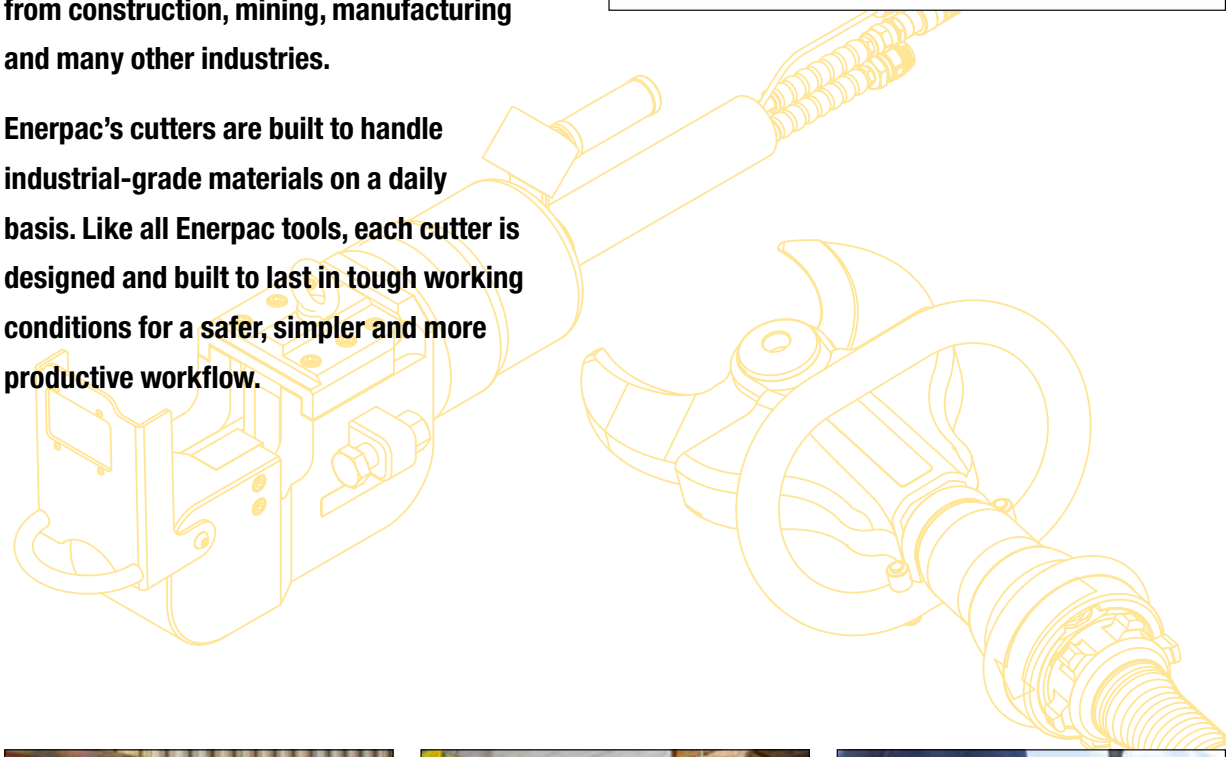







Overview Cutters

Cutter Type		Maximum Tool Capacity *	Series		Power Source	Page
Bar Cutters		52 mm (max. material cutting diameter)	**EBH EBE EBC**		Hydraulic, Electric & Cordless	**194** ▶
Decommissioning Cutters		170 mm (max. blade aperture)	**EDCH**		Hydraulic	**198** ▶
Flat Bar Cutters		70 x 15 mm (max. material cutting Height x Width)	**EFBE**		Electric	**199** ▶
Chain Cutters		32 mm (max. link cutting diameter)	**ECCE**		Electric	**200** ▶
Wire Rope and Cable Cutters		180 mm (max. material cutting diameter)	**EWCH EWCE**		Hydraulic & Electric	**202** ▶
Cutter / Spreader Combination Tools		300 mm (max. blade aperture)	**ECSE**		Electric	**205** ▶
Hydraulic Cutterheads		101 mm (max. material cutting diameter)	**WHC WHR STC**		Hydraulic	**206** ▶
Self-Contained Hydraulic Cutters		85 mm (max. material cutting diameter)	**WMC**		Manual	**207** ▶
ZE-Series Pumps and Accessories		1,1 - 5,6 kW	**EBH EWCH**		Electric	**208** ▶
ZC, ZE-Series Pumps and Accessories		1,0 - 1,1 - 5,6 kW	**EDCH**		Cordless & Electric	**209** ▶

* Actual cutting capacities may vary depending on material being cut.

EB-Series, Bar Cutters

ENERPAC

▼ Shown from left to right: **EBC20E, EBH30 and EBE22E**



Your Fast, Safe and Simple Solution for Cutting Metal Bar

Internal Mechanics

EBH-Series: Cylinder is driven by an external Enerpac pump.

EBC and EBE-Series: Cylinder are driven by a radial pump powered by an electric motor.

Typical Bar Cutting Applications

- Commercial and residential construction
- Concrete and masonry
- Metal fabrication
- Industrial manufacturing

Productivity

- **A broad range of hydraulic and electric tools quickly and easily cut through heavy-duty bar**
- **Highly durable, long-lasting blades outlast angle grinder or saw blades.**

Safety

- **Controlled cutting process enhances user safety compared with use of cut-off blades**
- **Minimal spark risk compared to torching, grinding and sawing methods**
- **Cutters produce minimal vibration, helping prevent HAVS (Hand Arm Vibration Syndrome).**

▼ *Enerpac's bar cutters are built to handle tough cutting applications.*





Tel: +45 63 12 83 00 | Email: ps@hymatik.com | www.hymatik.com | Hvidkaervej 27a, DK-5250 Odense SV, Denmark

EBH-Series, Hydraulic Bar Cutters

EBH-Series Hydraulic Bar Cutters

EBH-Series Hydraulic Bar Cutters are driven by a specialized external hydraulic pump for optimal power and a higher duty cycle compared with other cutter types.

These cutters are ideal for use in production or manufacturing facilities with demanding, high-volume cutting applications.

EBH Series

CE



Maximum Material Hardness:
HRc 43

Maximum Material Diameter:
30 - 35 - 52 mm

Maximum Operating Pressure:
700 bar

① Highly durable blades maintain effectiveness throughout rigorous use.

② Safety guard helps protect hands from injury.

③ Heavy-duty cutting head provides a longer operational life.

④ Lifting handle enables easier positioning and transport.

⑤ Double-acting cylinder with advance and retract buttons improves control and reduces jamming

⑥ External hydraulic pump helps keep the tool cool, improving operational time (pump and hose sold separately).





Electric Pumps and Accessories

The EBH-Series Hydraulic Cutters are designed to work with specialized ZE4 and ZE6-Series pumps. Pump models vary by voltage type. Pump and hoses are sold separately. Both are required for the system to function. See page 208 for complete details on required pump and accessories

Page: 208



Optional Gauge Kit GKHC

Optional gauge and accessories can be used to monitor pressure in the hydraulic system. Enerpac recommends **GKHC Gauge Kit** for use with Enerpac hydraulic cutters.

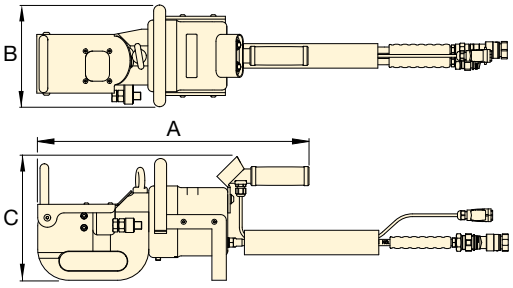

Maximum Material Diameter * (mm)	Model Number	Maximum Material Tensile Strength (daN/mm²)	Maximum Material Hardness * (HRc)	Maximum Cutting Force (kN)	Maximum Hydraulic Operating Pressure (bar)	Dimensions (mm) A	B	C	(kg)	Replacement Blade Kit Model Number
30	**EBH30**	60	43	445	700	480	183	221	21	**EBH3001K**
35	**EBH35**	62	43	606	700	566	213	259	48	**EBH3501K**
52	**EBH52**	50	43	1078	700	765	264	311	136	**EBH5201K**

* Maximum material properties indicated refer to the material to be cut.

EBE-Series, Electric Bar Cutters

ENERPAC

EBE-Series, Electric Bar Cutters

The versatile EBE-Series Electric Bar Cutters quickly cut through heavy duty bar up to 26 mm in diameter without the need for an external hydraulic pump.

Their compact size and low weight enable them to be easily transported and used wherever an external power source is available.

EBE Series



Maximum Material Hardness:
HRc 43

Maximum Material Diameter:
22 - 26 mm

Voltage *:
120 and 230 Volt

* ETL certification applies to 120 Volt tools only.

① Highly durable blades maintain effectiveness throughout rigorous use.

② Safety guard helps protect hands from injury.

③ Heavy-duty cutting head provides a longer operational life.

④ Lifting handle enables easy positioning and transport.

⑤ Piston-release mechanism allows blade to be reset, reducing jamming and providing a controlled cutting process.



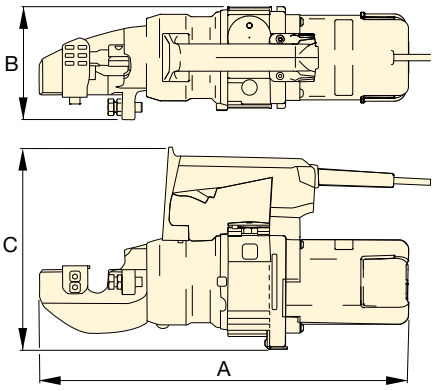

Voltage: (Model Number ending with suffix)

B = 120V, 60 Hz (with American-style NEMA 1-15 plug)

E = 230V, 50 Hz (with European-style SCHUKO plug)

Maximum Material Diameter [1] (mm)	Power Specifications Volt	Hz	Amps	kW	Model Number	Maximum Material Tensile Strength (daN/mm²)	Maximum Material Hardness [1] (HRc)	Maximum Cutting Force (kN)	Dimensions (mm) A	B	C	Cord Length (m)	(kg)	Replacement Blade Kit Model Number
22	120	60	11	1,3	**EBE22B**	65	43	223	460	140	249	1,8	13,2	**EBE2201K**
22	230	50	6,8	1,4	**EBE22E**	65	43	223	460	140	249	3,0	13,2	**EBE2201K**
26	120	60	11	1,3	**EBE26B**	65	43	329	468	140	259	1,8	15,9	**EBE2601K**
26	230	50	6,8	1,4	**EBE26E**	65	43	329	468	140	259	3,0	15,9	**EBE2601K**

[1] Maximum material properties indicated refer to the material to be cut.

EBC-Series, Cordless Bar Cutters

Cordless Bar Cutters

The highly portable EBC-Series Cordless Bar Cutters quickly and easily slice through up to number 6 rebar, or similar metal bar up to 20 mm in diameter.

A powerful 18V Lithium-ion battery provides mobility and long lasting performance, making these tools the perfect go-to solution for the jobsite, including remote locations, or anywhere an external power source is not available.

EBC Series



Maximum Material Hardness:
HRc 43

Maximum Material Diameter:
20 mm

Battery:
12 and 18 Volt

* ETL certification applies to 120 Volt tools only.

① Highly durable blades maintain effectiveness throughout rigorous use.
② Safety guard helps protect hands from injury.
③ Highly durable cutting head can be rotated 360 degrees to aid in the positioning of the blades on the application.
④ Lifting handle enables easy positioning and transport.
⑤ Piston-release mechanism allows blade to be reset, providing a controlled cutting process and reducing jamming.
⑥ Powerful 18V battery provides high performance and complete mobility.



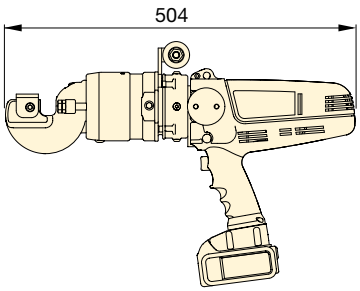

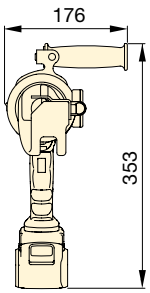

Batteries and Chargers

EBC-Series Cutters come standard with two DeWALT® 18V-5Ah lithium-ion batteries and one DeWALT® 12V or 18V charger. Additional batteries and chargers are sold separately.

EBC-Series Cutters work with DeWALT® 18V XR batteries. DeWALT® is a registered trademark of DeWALT Industrial Tool Co., which has not manufactured, licensed, approved, or endorsed this cutter product.

For Cutter Model Nr.	DeWALT® Lithium-ion Battery	Li-ion Battery Charger 12V and 18V
EBC20B	B205	BC1220B
EBC20E	B185	BC1220E

Voltage: (Model Number ending with suffix)

B = 120V, 60 Hz (with American-style NEMA 1-15 plug)
E = 230V, 50 Hz (with European-style SCHUKO plug)

Maximum Material Diameter [1] (mm)	Power Specifications: Battery Input Voltage (V)	Amps	kW	Model Number [2]	Maximum Material Tensile Strength [1] (daN/mm²)	Maximum Material Hardness [1] (HRc)	Maximum Cutting Force (kN)	(without battery) (kg)	Replacement Blade Kit Model Number
20	18 - 20	46	0,83	**EBC20B**	65	43	190	8,7	**EBC2001K**
20	18 - 20	46	0,83	**EBC20E**	65	43	190	8,7	**EBC2001K**

[1] Maximum material properties indicated refer to the material to be cut.
[2] To order an EBC-Series Cutter without batteries or a charger, remove the "B" or "E" from the Model Number, e.g. "EBC20".

EDCH-Series, Decommissioning Cutters

ENERPAC

▼ EDCH130, Decommissioning Cutter



EDCH Series

CE

Maximum Material Hardness:
HRc 41

Maximum Blade Aperture:
130 - 145 - 170 mm

Maximum Operating Pressure:
700 bar



Electric Pumps and Accessories

The EDCH-Series Hydraulic Cutters are designed to work with specialized ZC3, ZE4 and ZE6-Series electric pumps. Pump models vary by voltage type. Pump and hose are all sold separately, and all are required for the system to function. See page 209 for complete details on required pumps and accessories.

Page: 209

*** IMPORTANT**

Do not use to cut wire rope. Use instead the EWCH-Series wire and rope cutter.

Page: 203



Optional Gauge Kit GKHC

Optional gauge and accessories can be used to monitor pressure in the hydraulic system. Enerpac recommends **GKHC Gauge Kit** for use with Enerpac hydraulic cutters.

Productivity

- **Powerful jaws and an exceptionally large blade aperture enable use on a large variety of applications including metal tubes, communication cables, profiles and similar materials ***
- **Multiple pump options provide power, speed and mobility for all your applications.**

Safety

- **Minimal spark risk compared with torching, grinding and sawing methods**
- **Cutters produce minimal vibration, helping prevent HAVS (Hand Arm Vibration Syndrome).**



① Durable blades maintain efficiency throughout rigorous use
② Double-acting cylinder improves control and reduces jamming
③ Control knob immediately stops the tool when released, improving operator safety
④ External hydraulic pump helps keep tool cooler and working longer (pump an hose sold separately).

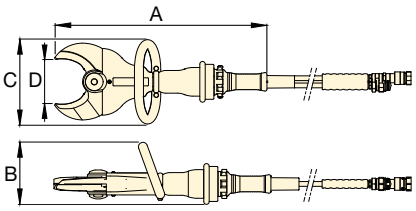

Maximum Blade Aperture * (mm)	Model Number	Maximum Material Tensile Strength (daN/mm²)	Maximum Material Hardness * (HRc)	Maximum Operating Pressure (bar)	Dimensions (mm) A	B	C	D	(kg)	Replacement Blade Kit Model Number
130	**EDCH130**	65	41	700	589	170	234	130	11,5	**EDCH13001K**
145	**EDCH145**	65	41	700	687	206	246	145	16,9	**EDCH14501K**
170	**EDCH170**	65	41	700	733	172	249	170	24,2	**EDCH17001K**

* Maximum material properties indicated refer to the material to be cut.
Do not use to cut wire rope. Use instead the EWCH-Series wire and rope cutter.

Tel: +45 63 12 83 00 | Email: ps@hymatik.com | www.hymatik.com | Hvidkaervej 27a, DK-5250 Odense SV, Denmark

Electric Flat Bar Cutters

EFBE-Series Electric Flat Bar Cutters

EFBE-Series Electric Flat Bar Cutters enhance workplace safety by replacing unsafe cutting methods with a precise, controlled cutting solution. Unlike standard bar cutters, the deep cutting head design accommodates metal bar up to 70 mm (2¾ inch) high and over 15 mm (0.59 inch) thick.

A piston release mechanism allows the blade to be stopped and reset at any time, providing the operator with a high degree of cutting precision and control. EFBE-Series Cutters are perfect for use in industrial manufacturing facilities as well as steel and metal fabrication shops.

EFBE Series



Maximum Material Hardness:
HRc 33

Maximum Material Height x Width:
50 x 17 mm / 70 x 15 mm

Voltage *:
120 and 230 Volt

* ETL certification applies to 120 Volt tools only.

① Highly durable blades cut through flat bar, maintaining effectiveness throughout rigorous use

② Heavy-duty cutting head provides a longer operational life

③ Robust handle enables easy positioning and transport

④ Piston-release mechanism allows blade to be retracted, providing a controlled cutting process and reducing jamming





Replacement Blade Kits

To order replacement parts use one of the model numbers shown below.

For Cutter Model Number	Blade Kit Model Number
EFBE5017B	EFBE501701K
EFBE5017E	
EFBE7015B	EFBE701501K
EFBE7015E	

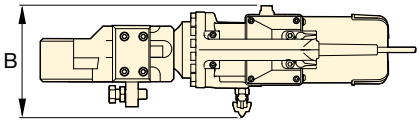

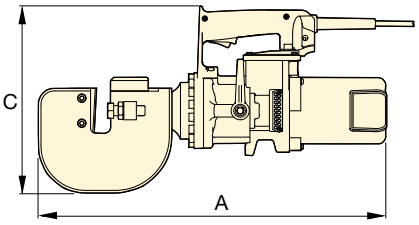

Voltage: (Model Number ending with suffix)

B = 120V, 60 Hz (with American-style NEMA 1-15 plug)

E = 230V, 50 Hz (with European-style SCHUKO plug)

Maximum Material Dimensions [1] (mm)		Power Specifications				Model Number	Maximum Material Tensile Strength [1] (daN/mm²)	Maximum Material Hardness [1] (HRc)	Maximum Cutting Force (kN)	Dimensions (mm)			Cord Length (m)	(kg)
Height	Width	Volt	Hz	Amps	kW					A	B	C		
50	17	120	60	11	1,3	EFBE5017B	45	33	265	483	175	272	1,8	21
50	17	230	50	6,8	1,4	EFBE5017E	45	33	265	483	175	272	3,0	21
70	15	120	60	11	1,3	EFBE7015B	45	33	265	555	175	298	1,8	30
70	15	230	50	6,8	1,4	EFBE7015E	45	33	265	555	175	298	3,0	30

[1] Maximum material properties indicated refer to the material to be cut.

ECCE-Series, Electric Chain Cutters

ENERPAC

▼ ECCE32E Electric Chain Cutter



Your Simple Solution for Cutting High-Strength Industrial Chain

Internal Mechanics

ECCE-Series: Cylinder is driven by a radial pump powered by an electric motor.

Typical Chain Cutting Applications

- Chain manufacturing
- Mining
- Rigging / material handling for transport
- Oil and gas
- Marine

Productivity

- **Quickly cut through heavy-duty chain links with minimal effort**
- **Highly durable blades outlast angle grinder or saw blades.**

Safety

- **Controlled cutting process behind a protective shield enhances safety**
- **Precisely cut only selected link, helping prevent damage to adjacent links and weakening of chain**
- **Minimal spark risk compared to torching, grinding and sawing methods**
- **Cutters produce minimal vibration, helping prevent HAVS (Hand Arm Vibration Syndrome).**



◀ *Cut through chain links with ease using Enerpac's chain cutters.*

ECCE-Series, Electric Chain Cutters

ECCE-Series Electric Chain Cutters

ECCE-Series Electric Chain Cutters are ideal for applications where safety is paramount. Unlike other cutting methods, Enerpac's chain cutters precisely cut selected chain links behind an enclosed, transparent safety guard.

This not only protects the operator's hands, it also helps prevent damage to adjacent links, which often results from using alternative cutting methods like torches or cut-off tools.

ECCE Series



Maximum Material Hardness:
HRc 46

Maximum Material Diameter:
25 - 32 mm

Maximum Grade of Chain:
100

Voltage *:
120 and 230 V

* ETL certification applies to 120 Volt tools only.

① Highly durable blades maintain effectiveness throughout rigorous use.

② Transparent safety guard protects hands and allows continuous monitoring for better management of cutting process.

③ Heavy-duty cutting head provides a longer operational life.

④ Lifting handle and eyebolt enable easy positioning and transport.

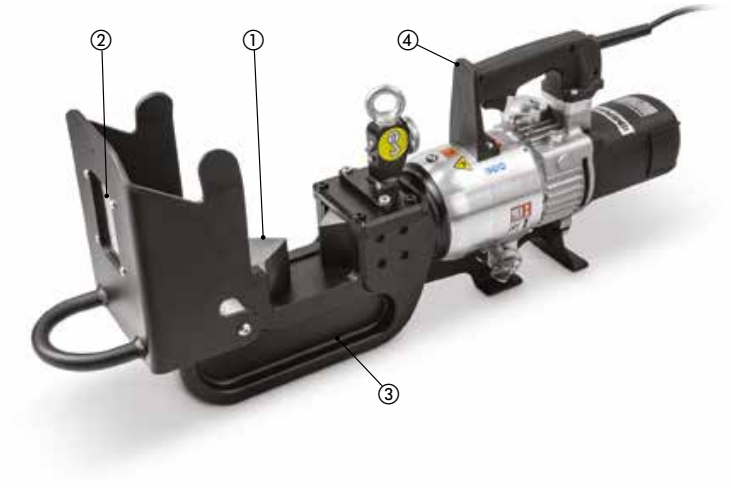

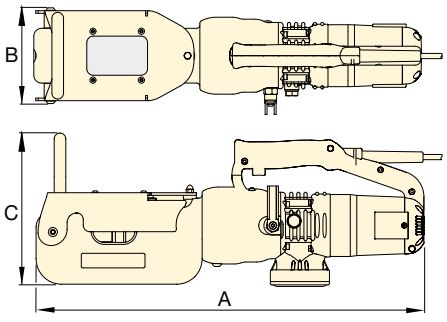

Voltage: (Model Number ending with suffix)

B = 120V, 60 Hz (with American-style NEMA 1-15 plug)

E = 230V, 50 Hz (with European-style SCHUKO plug)

Grade [1] and Maximum Material Diameter [2] (mm)			Power Specifications				Model Number	Maximum Material Hardness [1]	Maximum Cutting Force	Dimensions (mm)			Cord Length		Replacement Blade Kit Model Number
Grade 70	Grade 80	Grade 100	Volt	Hz	Amps	kW		(HRc)	(kN)	A	B	C	(m)	(kg)	
25	25	13	120	60	10	1,2	**ECCE26B**	46	312	600	154	235	1,8	25	**ECCE2601K**
25	25	13	230	50	5,3	1,1	**ECCE26E**	46	312	600	154	235	3,0	25	**ECCE2601K**
32	25	19	120	60	11	1,3	**ECCE32B**	46	471	700	192	321	1,8	48	**ECCE3201K**
32	25	19	230	50	6,8	1,4	**ECCE32E**	46	471	700	192	321	3,0	48	**ECCE3201K**

[1] Cutting larger chains or those of a grade higher than those recommended will result in increased wear, and may damage the tool.

[2] All links over 1/2" (12,7 mm) must be cut in two passes, with each pass cutting one side of the link.

EWC-Series, Wire and Cable Cutters

ENERPAC

▼ Shown from left to right: **EWCH90 and EWCE55E**



The Quick and Clean Way to Cut Cable and Wire Rope

Internal Mechanics

EWCH-Series: Cylinder is driven by an external Enerpac hydraulic pump.

EWCE-Series: Cylinder is driven by a radial pump powered by an electric motor.

Typical Wire and Cable Cutting Applications

- Telecommunications
- Electrical installation and maintenance
- Power generation and transmission
- Shipbuilding

Productivity

- **A broad range of hydraulic and electric tools quickly and easily cut through cable and wire rope.**

Safety

- **Controlled cutting process enhances operator safety**
- **Minimal spark risk compared with torching, grinding and sawing methods**
- **Cutters produce minimal vibration, helping prevent HAVS (Hand Arm Vibration Syndrome).**

▼ *Guillotine-style blades make quick work of electrical cables and rope.*



Tel: +45 63 12 83 00 | Email: ps@hymatik.com | www.hymatik.com | Hvidkaervej 27a, DK-5250 Odense SV, Denmark

EWCH-Series, Hydraulic Wire and Cable Cutters

EWCH-Series Hydraulic Wire and Cable Cutters

EWCH-Series Hydraulic Wire and Cable Cutters are ideal for use in production facilities where demanding, high volume cutting applications are often encountered.

Each tool is driven by a specialized external hydraulic pump, which provides greater cutting force and allows for higher duty cycles compared with other cutter types.

EWCH Series

CE



Maximum Material Hardness:
HRc 43

Maximum Material Diameter:
90 - 140 - 180 mm

Maximum Operating Pressure:
700 bar

① Guillotine-style blades maintain effectiveness throughout rigorous use.
② Cutting head can be opened and closed to help position material to be cut.
③ Eyebolt facilitates easy lifting.
④ Double-acting cylinder with advance and retract buttons improves control and reduces jamming.
⑤ External hydraulic pump helps keep tool cooler and working longer (pump and hose are sold separately).





Electric Pumps and Accessories

The EWCH-Series Hydraulic Cutters are designed to work with specialized ZE6-Series electric pumps. Pump models vary by voltage type. Pump and hoses are sold separately. Both are required for the system to function. See page 208 for complete details on required pump and accessories

Page: 208



Optional Gauge Kit GKHC

Optional gauge and accessories can be used to monitor pressure in the hydraulic system. Enerpac recommends **GKHC Gauge Kit** for use with Enerpac hydraulic cutters.

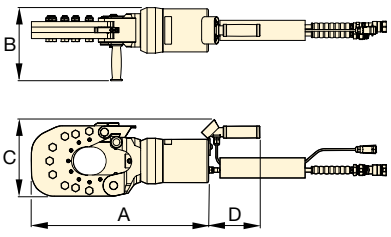

EWCH90

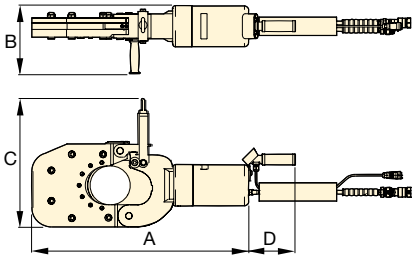

EWCH140

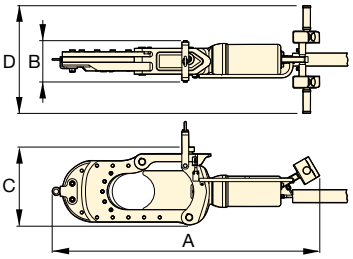

EWCH180

Maximum Material Diameter * (mm)	Model Number	Maximum Material Tensile Strength (daN/mm²)	Maximum Material Hardness * (HRc)	Maximum Cutting Force (kN)	Maximum Hydraulic Operating Pressure (bar)	Dimensions (mm) A	B	C	D	(kg)	Replacement Blade Kit Model Number
90	**EWCH90**	65	43	550	700	582	282	251	169	54	**EWCH9001K**
140	**EWCH140**	65	43	550	700	782	246	309	169	90	**EWCH14001K**
180	**EWCH180**	65	43	774	700	1364	211	401	551	150	**EWCH18001K**

* Maximum material properties indicated refer to the material to be cut.

EWCE-Series, Electric Wire and Cable Cutters

ENERPAC

EWCE-Series Electric Wire and Cable Cutters

EWCE-Series Electric Wire and Cable Cutters combine the efficiency and safety of their hydraulic counterparts with the greater portability of electric tools. Their lighter weight allows for easier carrying and positioning. Available in 120V and 230V versions.

① Durable, guillotine-style style blades maintain effectiveness throughout rigorous use.

② Cutting head opens wide for easy positioning of wire or cable.

③ Robust handles enable easy positioning and transport.

④ Double-acting cylinder with directional control improves handling and reduces jamming.

EWCE Series



Maximum Material Hardness:
HRc 48

Maximum Material Diameter:
42 - 55 mm

Voltage *:
120 and 230 V

* ETL certification applies to 120 Volt tools only.

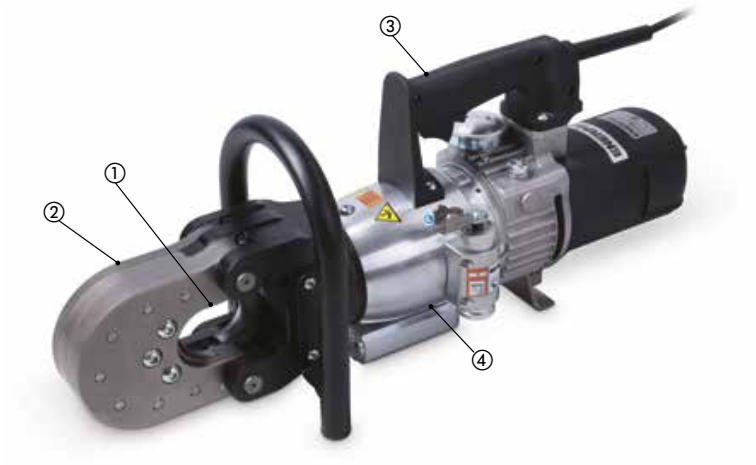

Voltage: (Model Number ending with suffix)

B = 120V, 60 Hz (with American-style NEMA 1-15 plug)

E = 230V, 50 Hz (with European-style SCHUKO plug)

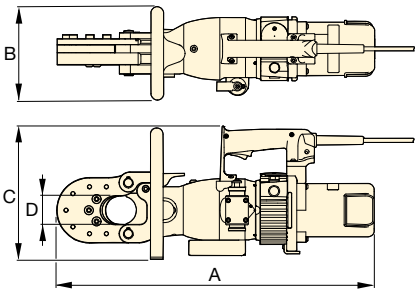



◀ *Cut through wire rope and cables with ease.*

Maximum Material Diameter * (mm)		Power Specifications				Model Number	Maximum Material Hardness *	Maximum Cutting Force	Dimensions (mm)				Cord Length		Replacement Blade Kit Model Number
Electric Cable	Wire Rope	Volt	Hz	Amps	kW		(HRc)	(kN)	A	B	C	D	(m)	(kg)	
55	42	120	60	11	1,3	**EWCE55B**	48	380	627	183	264	56	1,8	25	**EWCE5501K**
55	42	230	50	6,8	1,4	**EWCE55E**	48	380	627	183	264	56	3,0	25	**EWCE5501K**

* Maximum material properties indicated refer to the material to be cut.

ECS-Series, Cutter / Spreader Combination Tools

▼ ECSE300E



ECSE Series

Maximum Material Hardness:
HRc 41

Maximum Blade Aperture:
300 mm

Voltage *:
120 and 230 V

* ETL certification applies to 120 Volt tools only.

Internal Mechanics

ECSE-Series: Cylinder is driven by a radial pump powered by an electric motor.

Typical Chain Cutting Applications

- Industrial manufacturing
- Recycling
- Demolition

Productivity

- **Blades easily cut through metal profiles, pipes, rods and other obstructions**
- **Wedges on tips of blades provide powerful spreading force**

Safety

- **Controlled cutting process creates minimal spark risk compared with torching, grinding and sawing methods**

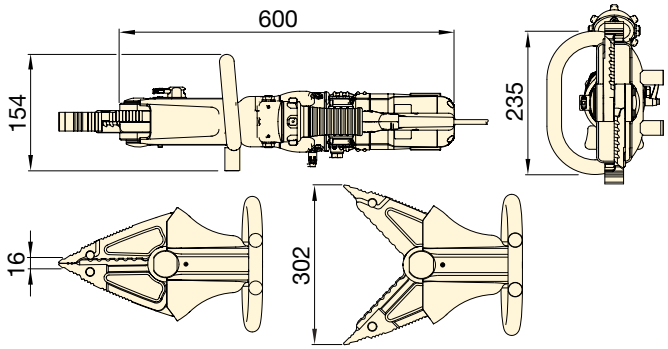



① Highly durable blades grip and cut through metal obstructions with ease
② Cutting head can be rotated 180 degrees in each direction for easier access to the application
③ Robust handle enables easy positioning and transport
④ Double-acting cylinder improves control and reduces jamming
⑤ Wedges provide powerful spreading force

Voltage: (Model Number ending with suffix)
B = 120V, 60 Hz (with American-style NEMA 1-15 plug)
E = 230V, 50 Hz (with European-style SCHUKO plug)

Maximum Blade Aperture (mm)	Power Specifications Volt	Hz	Amps	kW	Model Number	Maximum Material Tensile Strength [1] (daN/mm²)	Maximum Material Hardness [1] (HRc)	Maximum Spreading Force [2] (kN)	Cord Length (m)	(kg)	Replacement Jaws Kit Model Number
300	120	60	10,0	1,2	**ECSE300B**	65	41	46	1,8	15	**ECSE30001K**
300	230	50	5,3	1,1	**ECSE300E**	65	41	46	3,0	15	**ECSE30001K**

[1] Maximum material properties indicated refer to the material to be cut.
[2] 25 mm from jaw tips with jaws closed.

Tel: +45 63 12 83 00 | Email: ps@hymatik.com | www.hymatik.com | Hvidkaervej 27a, DK-5250 Odense SV, Denmark

WHC, WHR-Series, Hydraulic Cutterheads

ENERPAC

▼ Shown from left to right: **WHC4000, WHC750**



WHC, WHR, STC Series

Capacity:
3 - 20 ton

Cutting Capacity:
ø 13 - 101 mm

Maximum Operating Pressure:
700 bar

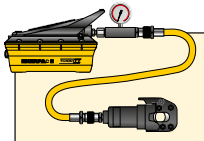

Tool-Pump Sets

Cutterheads marked with an * are available as **sets** (pump, tool, gauge, couplers and hose) for your ordering convenience.

Cutterhead Model Nr.	Pump Model Nr.	Set Model Number *
WHC750	P392	**STC750H**
WHC750	P392FP	**STC750FP**
WHC750	PATG1102N	**STC750A**
WHC1250	P392	**STC1250H**
WHC1250	P392FP	**STC1250FP**
WHC1250	PATG1102N	**STC1250A**

* **H** = Hand Pump, **FP** = Foot Pump, **A** = Air Pump

- **Single-acting, spring return on all models, except WHR1250**
- **Guillotine action for smooth cutting operation**
- **Lifting handles on larger models for easy transport**
- **Carrying bag included for easy carrying and tool protection**
- **Ideal for use with most Enerpac pumps featuring 3-way valve or dump valve and 700 bar pressure rating (except WHR1250, which requires 4-way valve)**
- **CR400 coupler and dust cap included on all models.**



Steel rope is easily cut with the smooth guillotine action of an Enerpac cutterhead. ▶

▼ **Selection Chart**
Maximum Cutting Capacities (ø in mm)

Cutter Head Operation	Capacity ton	Model Number	Oil Capacity (cm³)	Length (mm)	Steel Wire Rope, Hempcore or IWRC 6x7 6x12 6x19	Round Bar: Copper Wire or Bar	Round Bar: Aluminium Wire or Bar	Round Bar: Soft Steel Bolts	Round Bar: Reinforcing Bar	Wire Strand: Bare Copper Wire Strands	Wire Strand: Bare Aluminium Wire Strands 6x7	Wire Strand: ACSR	Wire Strand: Guy Steel Wire Strands 1x7 1x19	Cable: Telephone Cable CPP	Cable: Underground Cable (Power)	(kg)	Replacement Blades
Single-Acting	4	**WHC750***	19,7	127	16	19	19	19	13 **	19	19	19	16	☆	☆	3,2	**WCB750**
	20	**WHC1250***	134,4	279	31	31	31	31	25	31	31	31	22	☆	☆	11,3	**WCB1250**
	13	**WHC2000**	119,6	381	25	31	31	22	☆	51	51	51	19	☆	☆	10,4	**WCB2000**
	3	**WHC3380**	65,5	482	☆	☆	☆	☆	☆	76	76	☆	☆	85	85	9,1	**WCB3380**
	8	**WHC4000**	137,7	609	☆	☆	☆	☆	☆	89	89	☆	☆	101	101	14,5	**WCB4000**
Dbl.-Act.	20	**WHR1250**	122,9	419	31	31	31	31	25	31	31	31	22	☆	☆	11,8	**WCB1250**

* Available in sets with P392 Hand Pump, P392FP Foot Pump or PATG1102N Turbo Air Pump.
* Low Alloy
☆ Will not cut designated material.

Tel: +45 63 12 83 00 | Email: ps@hymatik.com | www.hymatik.com | Hvidkaervej 27a, DK-5250 Odense SV, Denmark

WMC-Series, Self-Contained Hydraulic Cutters

▼ Shown from left to right: **WMC2200, WMC750**



WMC Series

Capacity:
3 - 20 ton

Cutting Capacity:
ø 14 - 85 mm



Replacement Blades

60-62 HRc hardened replacement blades.

For Cutter Model Number	Order Blades Model Number
WMC580	**WCB750**
WMC750	**WCB750**
WMC1000	**WCB1000**
WMC1250	**WCB1250**
WMC2200	**WCB2000**
WMC 3380	**WCB3380**

- **Rotating heads for operator convenience**
- **Guillotine action for smooth cutting operation**
- **Carrying bag included for easy carrying and tool protection**
- **Velcro straps to secure handles on larger models for easy carry**
- **Spring return for easy operation**
- **Lightweight self-contained tool, can be used anywhere.**

CAUTION !:

A "☆" in the charts on these pages means that this hydraulic cutter is not designed to cut this size or type of material. Any attempt to do so may result in personal injury and damage to the unit and will void the warranty.

▼ **Selection Chart**
Maximum Cutting Capacities (ø in mm)

Capacity ton	Model Number	Length (mm)	Steel Wire Rope, Hempcore or IWRC 6x7 6x12 6x19	Round Bar: Copper Wire or Bar	Round Bar: Aluminium Wire or Bar	Round Bar: Soft Steel Bolts	Round Bar: Reinforcing Bar	Wire Strand: Bare Copper Wire Strands	Wire Strand: Bare Aluminium Wire Strands 6x7	Wire Strand: ACSR Wire Strands	Wire Strand: Guy Steel Wire Strands 1x7	Wire Strand: Guy Steel Wire Strands 1x19	Cable: Telephone Cable CPP	Cable: Underground Cable (Power)	(kg)
4	**WMC580**	381	16	16	16	16	10	16	16	16	14	14	☆	☆	3,6
4	**WMC750**	381	19	19	19	17	13 **	19	19	19	14	14	☆	☆	3,6
20	**WMC1000 ***	679	☆	19	19	19	19	☆	☆	☆	☆	☆	☆	☆	11,3
20	**WMC1250**	679	31	31	31	31	22	31	31	31	22	22	☆	☆	10,4
13	**WMC2200**	628	25	31	31	22	☆	51	51	51	19	19	☆	☆	10,9
3	**WMC3380**	660	☆	☆	☆	☆	☆	76	76	☆	☆	☆	85	85	10,0

* Cuts 12 mm alloy chain grade 70 (type G7 transport or tie-down) or grade 80 (for overhead lifting applications).
** Low Alloy.
☆ Will not cut designated material.

Pumps & Accessories for EBH & EWCH-Cutters

ENERPAC

Pumps & Accessories for EBH & EWCH-Cutters

EBH-Series Bar Cutters and EWCH-Series Wire and Cable Cutters are powered by an external pump with an electric valve.

A twin hydraulic hose and electric cable connect the tools to the pump, allowing the user to operate them directly from a control panel located on the cutters.

ZE Series



Reservoir Capacity:
4,6 - 9,8 litres

Motor Size:
1,1 - 5,6 kW

Maximum Operating Pressure:
700 bar



ZE4-Series Pumps

Specialized **ZE4-Series** pumps provide a balance of speed and versatility, and are available in 115 and 230 volts. Recommended for use with **EBH30** and **EBH35** cutters when portability, or the convenience of using standard voltage is required.



ZE6-Series Pumps

Specialized **ZE6-Series** 3-phase pumps offer a high-flow rate that provides fast performance for demanding applications. Recommended for **EBH52** and all **EWCH** cutting applications where speed is critical, or where higher flow rates are required by the application.



Optional Gauge Kit GKHC

Optional gauge and accessories can be used to monitor pressure in the hydraulic system. Enerpac recommends **GKHC Gauge Kit** for use with Enerpac hydraulic cutters.



Hoses

EBH-and EWCH-Series Cutters require a twin hose with an electric cable. The hose comes equipped with the appropriate couplers. Required hoses sold separately.

Description	Model Number
6,1 m long, twin hose with couplers, sheath & electric cable	**CH720EC**

Pump Voltage 1-phase: (Model Number ending with suffix)
B = 120V, 60 Hz (with American-style NEMA 5-15 plug)
E = 230V, 50 Hz (with European-style SCHUKO plug)
I = 230V, 50 Hz (with NEMA 6-15 plug)

Pump Series	Pump Model Number *	Motor Electrical Specifications (Volt - Phase, 50-60 Hz)	Motor Size (kW)	Reservoir Capacity (litres)	Dimensions (mm) Height	Length	Width	(kg)	Required Twin Hose Model Number (Sold seperately)	Compatible Cutter Model Number (Sold Separately)
ZE4	**ZE4404XB**	115 V - 1 ph	1,1	4,6	513	521	279	45	**CH720EC**	**EBH30 EBH35**
	ZE4404XE	208-240 V - 1 ph								
	ZE4404XI	208-240 V - 1 ph								
ZE6 [1]	**ZE6410XG-S**	208-240 V - 3 ph	5,6	9,8	384	559	384	77	**CH720EC**	**All EBH and EWCH-Series Cutters**
	ZE6410XJ-S	460-480 V - 3 ph								
	ZE6410XK-S	440 V - 3 ph								
	ZE6410XW-S	380-415V - 3 ph								

* Indicated pumps come equipped with appropriate configurations to work with indicated cutters.
[1] ZE6 pumps are available with roll cages. To add add a roll cage, add an "R" prior to the "S" in the model number: example **ZE6410XG-RS**.

Pumps & Accessories for EDCH-Cutters

Pumps & Accessories for EDCH-Cutters

The EDCH-Decommissioning Cutters are designed to work in a wide variety of environments, from factories to demolition projects.

Enerpac offers multiple pump options to provide power, speed and mobility for all your applications.

ZC
ZE
Series



Reservoir Capacity:
4,6 - 9,8 litres

Motor Size:
1,0 - 1,1 - 5,6 kW

Maximum Operating Pressure:
700 bar



ZC3-Series Cordless Pumps

Specialized **ZC3-Series** Cordless Pumps offer the portablity of a cordless tool without the added weight of an integrated motor, combining freedom of movement with ease of use. Recommended for use with the **EDCH130** cutter.



ZE4-Series Pumps

Specialized **ZE4-Series** Pumps provide a balance of speed and versatility. Recommended for use with all **EDCH** cutters when the convenience of using standard voltage is required.



ZE6-Series Pumps

Specialized **ZE6-Series** pumps offer a high-flow rate that provides fast performance. Recommended for use with all **EDCH** cutters when 3-phase power is available, and speed is critical.



Optional Gauge Kit GKHC

Optional gauge and accessories can be used to monitor pressure in the hydraulic system. Enerpac recommends **GKHC Gauge Kit** for use with Enerpac hydraulic cutters.



Twin Hose

EDCH-Series Cutters require a twin hose for operation. The hose comes equipped with the appropriate couplers.

Description	Model Number
6,1 m long, twin hose with couplers	**CH720MC**

Pump Voltage 1-phase: (Model Number ending with suffix)
B = 120V, 60 Hz (with American-style NEMA 5-15 plug);
E = 230V, 50 Hz (with European-style SCHUKO plug); **I** = 230V, 50 Hz (with NEMA 6-15 plug)

Pump Series	Pump Model Number *	Motor Electrical Specifications (Volt - Phase, Hz)	Motor Size (kW)	Reservoir Capacity (litres)	Dimensions (mm) Height	Length	Width	(kg)	Required Twin Hose Model Number (Sold seperately)	Compatible Cutter Model Number (Sold Separately)
ZC3	**ZC3204XB**	**Cordless** (115 V Charger 60 Hz)	1,0	4,6	653	472	363	27	**CH720MC**	**EDCH130**
	ZC3204XE	**Cordless** (230 V Charger 50 Hz)								
ZE4	**ZE4204XB**	115 V - 1 ph, 50-60 Hz	1,1	4,6	513	521	279	45	**CH720MC**	**EDCH130 EDCH145 EDCH170**
	ZE4204XE	208-240 V - 1 ph, 50-60 Hz								
	ZE4204XI	208-240 V - 1 ph, 50-60 Hz								
ZE6 [1]	**ZE6210XG-S**	208-240 V - 3 ph	5,6	9,8	384	559	384	77	**CH720MC**	**EDCH130 EDCH145 EDCH170**
	ZE6210XJ-S	460-480 V - 3 ph								
	ZE6210XK-S	440 V - 3 ph								
	ZE6210XW-S	380-415V - 3 ph								

* Indicated pumps come equipped with appropriate configurations to work with indicated cutters.
[1] ZE6 pumps are available with roll cages. To add add a roll cage, add an "R" prior to the "S" in the model number: example **ZE6410XG-RS**.

Enerpac Bolting Tools

ENERPAC

Enerpac's Bolting Solutions cater to the complete bolting work-flow, ensuring joint integrity in a variety of applications throughout the industry:

Joint Assembly

From simple pipe alignment to complex joint positioning of large structural assemblies, our comprehensive line of joint assembly products range from hydraulic and mechanical alignment tools to synchronized PLC-controlled multi-point positioning systems.

Controlled Tightening – Torque & Tensioning

Enerpac offers a variety of controlled tightening options to best meet the requirements of your application. From mechanical torque multipliers to hydraulic, pneumatic and electric square drive wrenches and from low profile torque wrenches to interconnectable bolt tensioning tools; we offer the products you need for accurate and simultaneous tightening of multiple bolts.

Joint Separation

Enerpac also provides hydraulic nut splitters and a variety of mechanical and hydraulic spreading tools for joint separation during inspection, maintenance and decommissioning operations.

High quality bolting solutions from the brand you can trust. See how Enerpac can make your bolting work-flow more accurate, safer and efficient.

Bolting Integrity Software

Enerpac Bolting Integrity Software Solutions play a key role in implementing and managing an Integrity Program for bolted connections.

The software offers Tool selection, Bolt Load calculations and Tool pressure settings, as well as, a combined Application Data Sheet and Joint Completion Report. Custom Joint information can also be entered.

Page: 412

Torque Tightening & Tensioning

See our 'Yellow Pages' for information on torque tightening. See our Bolting Safety Instructions on enerpac.com.

Page: 395



Flange Maintenance Tools

The range of patented flange spreading tools have been developed to aid and simplify the maintenance of flange joints.

Page: 319



Bolting Tools & Pumps Section Overview

	Capacity	Tool type and functions	Series		Page
Controlled Tightening and Loosening – Torque & Tensioning	1952 - 35.455 Nm 1440 - 26.150 Ft.lbs	**Square Drive Hydraulic Torque Wrenches** Rigid steel design & maximum versatility	S		212 ▶
	19-155 mm l ¾ - 6⅛" 27-120 mm l 1 1/16-4 15/16"	**Heavy-Duty Impact Sockets** **Back-Up Spanners for Torque Wrenches**	BSH BUS		216 ▶ 217 ▶
	46 - 75 mm hexagon 1 13/16 - 3⅛" hexagon	**Safe T™ Torque Lock** Hands-free torque wrench system	STTL		218 ▶
	2766 - 47.454 Nm 2040 - 35.000 Ft.lbs	**Hexagon Hydraulic Torque Wrenches** **Ultra-Slim Stepped Width Cassettes**	W WSL		220 ▶
	1909 - 37.965 Nm 1408 - 28.002 Ft.lbs	**Hexagon and Square Drive Torque Wrenches** One drive, two tools	RSL, RLP RSQ		234 ▶ 244 ▶
	1913- 32.617 Nm 1411- 24.057 Ft.lbs	**Square Drive Aluminum Torque Wrenches** Setting Industry-First Safety Standards	DSX		246 ▶
	2089 - 18.289 Nm 1541 - 13.489 Ft.lbs	**Drive Units, Hexagon Cassettes &** **Square Drive Torque Wrenches**	HMT, HLP HSQ		250 ▶ 254 ▶
	1015 - 10.845 Nm 750 - 8000 Ft.lbs	**Manual Torque Multipliers** **Pneumatic Torque Wrenches**	E PTW		256 ▶ 258 ▶
	2900 - 21.800 Nm 2140 - 16.100 Ft.lbs	**Safe T™ Torque Checker** Accurate mobile torque system safety testing	STTC		262 ▶
	200 - 10.000 Nm 148 - 7375 Ft.lbs	**Mobile Calibration System** For continuous rotation tools and hydraulic wrenches	MCS		264 ▶
		Selection Matrix Optimum Wrenches - Pump - Hoses			265 ▶
	Flow: 0,25 l/min Power: 0,37 kW	**Battery-Powered Torque Pumps** Cordless Hydraulic Power	XC		266 ▶
	Flow: 0,52 l/min Power: 0,63 kW	**E-Pulse® Electric Torque Pumps** Compact and Portable	E-Pulse®		268 ▶
	Flow: 0,50 l/min Power: 0,75 kW	**Electric Torque Pumps** Lightweight	TQ		270 ▶
	Flow: 0,90 l/min Power: 1,25 kW	**Portable Electric Torque Pumps** Z-Class innovation	ZU4T		272 ▶
	Flow: 0,82-1,64 l/min Power: 1,1 - 2,2 kW	**Electric Torque Pumps** Z-Class innovation	ZE4T ZE5T		276 ▶
	Flow: 0,4 l/min Air: 1389 l/min	**Air Hydraulic Torque Pump** Lightweight and Compact	LAT		278 ▶
	Flow: 1,0 l/min Air: 2840 l/min	**Air Driven Torque Pumps** Z-Class innovation	ZA4T	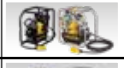	280 ▶
	134 - 4650 kN 224 - 3958 kN	**HydraMax® Topside Bolt Tensioners** **Topside Bolt Tensioners**	HM GT		286 ▶ 290 ▶
	151 - 2321 kN	**Aquajack® Subsea Bolt Tensioners**	EAJ		292 ▶
	203 - 2969 kN 373 - 2736 kN	**Power Generation Bolt Tensioners** **Foundation Bolt Tensioners**	PGT FTR, FTE		294 ▶ 296 ▶
	Flow: 0,61 cm³/stroke 1,0 - 270 metres	**1500 bar High-Pressure Hand Pump** **1500 bar Hoses, Hose Reels and Couplers**	HPT HT, B		300 ▶ 301 ▶
	Flow: 0,33 l/min Flow: 0,07 l/min	**Electric Tensioning Pumps** **Ultra-High Pressure Air Pump**	ZUTP ATP		302 ▶ 303 ▶
Joint Assembly and Separation	1 - 9 ton (10 - 90 kN)	**Flange Alignment Tools**	ATM		306 ▶
	8 - 14 ton (72 - 125 kN)	**Step-type Industrial Spreaders**	FSC, FSH FSM		308 ▶
	Hexagon: 10 - 130 mm Bolt range: M6 - M90	**Hydraulic Nut Splitters**	NC NSC, NSH		310 ▶ 312 ▶
	ø 1 - 12 inch flanges	**QuickFace – Mechanical Pipe Flange Face Tool**	FF		316 ▶

S-Series, Square Drive Torque Wrenches

ENERPAC

▼ Shown: **S3000PX**



Setting New Standards in Safety, Simplicity and Performance

Safety and Performance

- **Compact, high-strength uni-body construction provides a small operating radius without sacrificing endurance**
- **35° rotation angle and rapid return stroke for fast operation**
- **Tough manifold design with added safety feature for enhanced operator safety.**

Simplicity

- **360° click-on reaction arm with quick release lever provides easier handling, even with gloves on**
- **Includes robust handle or lifting eye which mounts on both sides of tool for extra maneuverability**
- **Push button square drive release for quickly reversing the square drive for tightening or loosening.**

Versatility

- **Available with optional enhanced tilt and swivel TSP300 manifold for horizontal and vertical maneuverability, with greater durability [1)]**

Accuracy

- **Constant torque output provides accuracy of ±3% across full stroke**
- **Optional Angle-of-Turn Indicator provides measurement of rotation.**

[1)] TSP300 is designed for X-Edition tools only, and is not compatible with previous edition tools. For replacement components for existing tools, refer to repair sheet on www.enerpac.com



Two Handle Styles

Robust angled positioning handle comes standard with every S-Series (X-Edition) tool. Straight positioning handles are available as accessories.

Compatible S-Series (X-Edition) wrenches	Model Nr. Angled positioning handles (standard)	Model Nr. Straight positioning handles (optional)
S1500X, S3000X	**SWH6A**	**SWH6S**
S6000X, S11000X	**SWH10A**	**SWH10S**
S25000X	**SWH10EA [2)]**	

[2)] SWH10EA is an lifting eye.



TSP - Pro Series Swivel

The optional TSP300 tilt and swivel manifold with robust interlocking design provides 360° X-axis rotation and 160° Y-axis rotation.

How to Order [1)]

Factory fitted to S-Series (X-Edition) wrenches: Insert a "P" prior to the "X" in the tool model number, example: **S1500PX**.

Order as an accessory using the model number: **TSP300**, which can be fitted to existing S-Series (X-Edition) wrenches. Includes male and female couplers.

Page: 215



ATEX declared. Calibration certificate included.

All X-edition tools are CE - ATEX declared and are shipped complete with a calibration certificate.

CE II 2 GD T4

X-Edition, Square Drive Hydraulic Torque Wrenches

Standard are: ① ② ⑥ ⑧
Other items are optional.

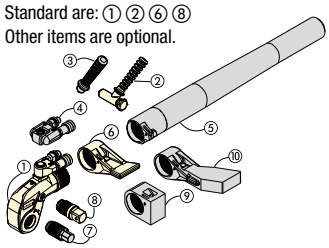

① Drive Unit
② Angeled Positioning Handle
③ Straight Positioning Handle
④ Pro Series Swivel
⑤ Reaction Tube Extension
⑥ Standard Reaction Arm
⑦ Allen-Key Drive
⑧ Square Drive
⑨ Short Reaction Arm
⑩ Extended Reaction Arm

Select the Right Torque

250%

Choose your Enerpac Torque Wrench using the untightening rule of thumb: Loosening torque equals about 250% of tightening torque.

S Series X-Edition



Nominal Torque Output:
35.455 Nm

Square Drive Range:
¾ - 2½ inch

Nose Radius:
25 - 64 mm

Maximum Operating Pressure:
690 bar

TORQUE WRENCH SELECTION (based on socket size range)

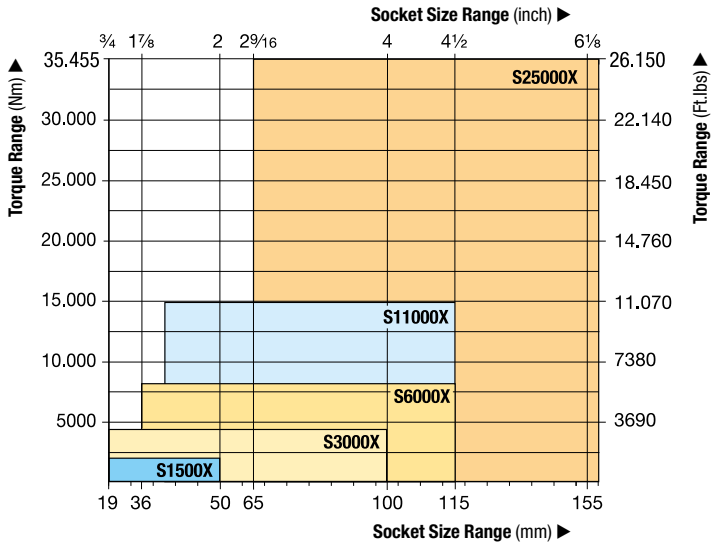



Back-Up Spanners

Hands free tool to be used to stop the back nut from turning during make up or break out.

Page: 217



Safe T™ Torque Lock

The Safe T™ Torque Lock is suitable for all bolted applications from 190 Nm to 15.000 Nm using a heavy duty impact socket.

The patented mechanical locking system creates a hands-free torque wrench solution suitable for Enerpac only square drive tools.

Suitable for S3000X, S6000X and S11000X.

Page: 218



Use only Heavy Duty Impact Sockets

For power driven torqueing equipment, according to ISO2725 and ISO1174; DIN 3129 and DIN 3121 or ASME-B107.2/1995.

Page: 216

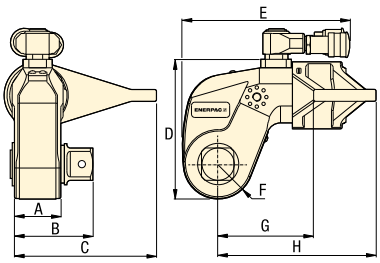

Nominal Torque at 690 bar (Nm)	Nominal Torque at 690 bar (Ft.lbs)	Minimum Torque at 69 bar (Nm)	Minimum Torque at 69 bar (Ft.lbs)	Square Drive Size (inch)	Square Drive Model Nr. (included with wrench)	Angle-of-Turn Model Nr. (optional)	Torque Wrench Model Number *	Dimensions (mm) A	B	C	D	E	F	G	H	(kg)
1952	1440	195	144	¾	SD15-012	AOT15	**S1500X**	39	65	108	97	136	25	70	129	3,2
4373	3225	438	323	1	SD30-100	AOT30	**S3000X**	48	78	135	128	173	33	90	161	5,6
8338	6150	834	615	1½	SD60-108	AOT60	**S6000X**	55	92	169	157	192	40	110	188	9,2
15.151	11.175	1516	1118	1½	SD110-108	AOT110	**S11000X**	72	114	197	190	228	50	133	229	15,8
35.455	26.150	3545	2615	2½	SD250-208	AOT250	**S25000X**	89	143	246	244	287	64	182	295	32,2

* To order a S-Series (X-edition) torque wrench fitted with a TSP300 tilt and swivel manifold, insert a "P"prior to the "X" in the tool model number, example: **S1500PX**.

Tel: +45 63 12 83 00 | Email: ps@hymatik.com | www.hymatik.com | Hvidkaervej 27a, DK-5250 Odense SV, Denmark

SDA-Series, Allen-Key Drives

ENERPAC

Maximum Torque at 690 bar:
35.455 Nm

Hexagon Size Allen Drive:
½ - 2¼ inch

Hexagon Size Allen Drive:
14 - 85 mm

For S Series



Torque Wrench	Optional Allen Drives, Imperial				Optional Allen Drives, Metric				Short Reaction Arm for Allen Drives		
									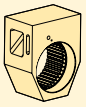	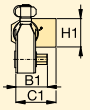	
Model Number	**Hexagon Size** [1] (inch)	**Maximum Torque** (Nm)	**Model Number**	**Dim.** B1 (mm)	**Hexagon Size** [1] (mm)	**Maximum Torque** (Nm)	**Model Number**	**Dim.** B1 (mm)	**Model Number**	**Dimensions** (mm) C1	H1
S1500X (1952 Nm)	½	481	**SDA15008**	66	**14**	644	**SDA1514**	66	**SRA15X**	67,5	74
	⅝	936	**SDA15010**	67	**17**	1152	**SDA1517**	68			
	¾	1620	**SDA15012**	71	**19**	1607	**SDA1519**	70			
	⅞	1952	**SDA15014**	74	**22**	1952	**SDA1522**	73			
	1	1952	**SDA15100**	77	**24**	1952	**SDA1524**	74			
S3000X (4373 Nm)	⅝	936	**SDA30010**	77	**17**	1152	**SDA3017**	77	**SRA30X**	80,0	74
	¾	1620	**SDA30012**	80	**19**	1607	**SDA3019**	79			
	⅞	2569	**SDA30014**	83	**22**	2488	**SDA3022**	82			
	1	3830	**SDA30100**	86	**24**	3234	**SDA3024**	84			
	1⅛	4373	**SDA30102**	88	**27**	4373	**SDA3027**	85			
	1¼	4373	**SDA30104**	89	**30**	4373	**SDA3030**	87			
	–	–	–	–	**32**	4373	**SDA3032**	88			
S6000X (8338 Nm)	⅝	936	**SDA60010**	85	**17**	1152	**SDA6017**	86	**SRA60X**	91,5	89
	¾	1620	**SDA60012**	89	**19**	1607	**SDA6019**	88			
	⅞	2569	**SDA60014**	92	**22**	2488	**SDA6022**	91			
	1	3830	**SDA60100**	95	**24**	3234	**SDA6024**	93			
	1⅛	5457	**SDA60102**	97	**27**	4603	**SDA6027**	94			
	1¼	7484	**SDA60104**	98	**30**	6311	**SDA6030**	96			
	–	–	–	–	**32**	7660	**SDA6032**	97			
S11000X (15.151 Nm)	1¼	7484	**SDA110104**	115	**30**	6311	**SDA11030**	112	**SRA110X**	127,5	106
	1⅜	9958	**SDA110106**	117	**32**	7660	**SDA11032**	114			
	1½	12.928	**SDA110108**	118	**36**	10.901	**SDA11036**	117			
	1⅝	15.151	**SDA110110**	122	**41**	15.151	**SDA11041**	121			
	1¾	15.151	**SDA110112**	125	**46**	15.151	**SDA11046**	127			
S25000X (35.455 Nm)	1½	12.928	**SDA250108**	141	**36**	10.901	**SDA25036**	140	**SRA250X**	158,5	135
	1⅝	16.433	**SDA250110**	145	**41**	16.107	**SDA25041**	144			
	1¾	20.520	**SDA250112**	148	**46**	22.744	**SDA25046**	148			
	1⅞	25.245	**SDA250114**	149	**50**	29.211	**SDA25050**	151			
	2	30.635	**SDA250200**	151	**55**	35.455	**SDA25055**	154			
	2¼	35.455	**SDA250204**	154	**60**	35.455	**SDA25060**	158			
	–	–	–	–	**65**	35.455	**SDA25065**	161			
	–	–	–	–	**70**	35.455	**SDA25070**	164			
	–	–	–	–	**75**	35.455	**SDA25075**	168			
	–	–	–	–	**85**	35.455	**SDA25085**	175			

[1] See page 407 for table of hexagon sizes of bolts, nuts and related thread diameters.

Accessories for S-Series, X-Edition Wrenches

TSP
RTEX
SRSX
Series



TSP-Series, Pro Series Swivel

- **Robust interlocking design**
- **360° X-axis and 160° Y-axis rotation**
- **Increases tool fit in restricted access areas**
- **Simplifies hose placement**
- **Includes male and female couplers**

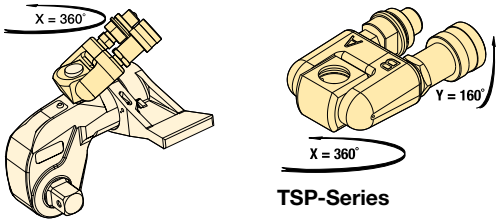

TSP-Series

For Torque Wrench Model Number	Model Number [1]	Maximum Pressure (bar)	(kg)
S1500X, S3000X, S6000X, S11000X, S25000X	**TSP300**	690	0,2

[1] To order a S-Series (X-edition) torque wrench fitted with a TSP300 tilt and swivel manifold, insert a "P"prior to the "X" in the tool model number, example: **S1500PX**.
TSP300 is designed for X-Edition tools only, and is not compatible with standard edition tools. For replacement components for existing tools, refer to repair sheet on www.enerpac.com

RTEX-Series, Reaction Tube Extensions

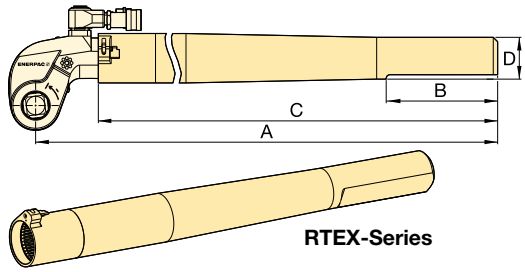

RTEX-Series

- **Full torque rated**
- **Increases tool fit in restricted access areas**

For Torque Wrench Model Number	Model Number	Dimensions (mm)				(kg) *
		A	B	C	D	
S1500X	**RTE15X**	706	152	636	58	4,6
S3000X	**RTE30X**	733	152	647	57	5,5
S6000X	**RTE60X**	747	152	659	65	7,7
S11000X	**RTE110X**	769	152	675	76	11,2
S25000X	**RTE250X**	813	152	685	100	17,3

* Weights indicated are for the accessories only and do not include the wrench.

SRSX-Series, Extended Reaction Arms

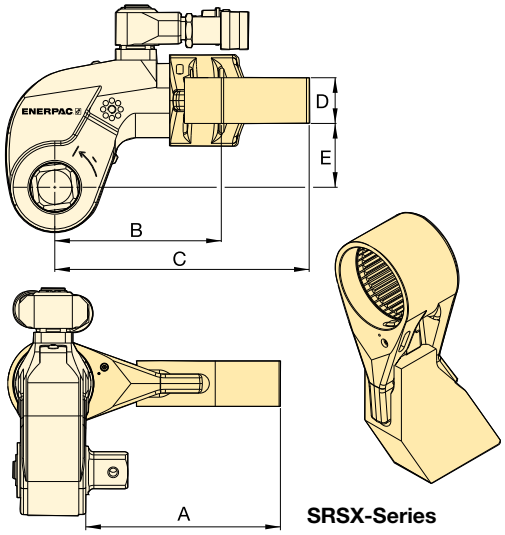

SRSX-Series

- **Lightweight interchangeable design**

For Wrench Model	Max. Torque (Nm)	Model Number	Dimensions (mm)					(kg) *
			A	B	C	D	E	
S1500X	1801	**SRS151X**	94	86	127	24	34	0,8
	1641	**SRS152X**	119	97	138	24	34	1,0
	1533	**SRS153X**	145	109	148	24	34	1,2
S3000X	3918	**SRS301X**	111	106	168	34	48	1,6
	3712	**SRS302X**	137	117	182	34	48	2,0
	3574	**SRS303X**	162	132	198	34	48	2,5
S6000X	7842	**SRS601X**	138	128	192	39	62	2,3
	7454	**SRS602X**	163	144	207	39	62	2,7
	7175	**SRS603X**	189	159	222	39	62	3,4
S11000X	14.650	**SRS1101X**	149	157	232	46	76	4,4
	13.957	**SRS1102X**	175	172	247	46	76	5,1
	13.391	**SRS1103X**	200	187	261	46	76	5,8
S25000X	33.538	**SRS2501X**	183	209	295	50	100	7,6
	32.049	**SRS2502X**	208	222	310	50	100	8,4
	30.750	**SRS2503X**	233	236	326	50	100	10,0

* Weights indicated are for the accessories only and do not include the wrench.

Tel: +45 63 12 83 00 | Email: ps@hymatik.com | www.hymatik.com | Hvidkaervej 27a, DK-5250 Odense SV, Denmark

BSH-Series, Heavy-Duty Sockets

ENERPAC

- Heavy-duty impact sockets
- Supplied with “Pin and O-Ring”

BSH Series



Hexagon Sizes (A/F):
19 - 155 mm | ¾ - 6⅛"

Select the Right Torque

250%

Choose your Enerpac Torque Wrench using the untightening rule of thumb: Loosening torque equals about 250% of tightening torque.

Page: 408

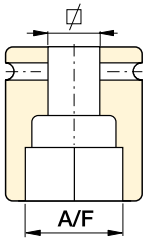

Hexagon Bolt and Nut Sizes

See the table of hexagon sizes of bolts, nuts and related thread diameters.

Page: 407

METRIC SOCKETS							
¾" Square Drive		1" Square Drive		1½" Square Drive		2½" Square Drive	
A/F (mm)	Model Number	A/F (mm)	Model Number	A/F (mm)	Model Number	A/F (mm)	Model Number
19	BSH7519	19	BSH1019	36	BSH1536	65	BSH2565
24	BSH7524	24	BSH1024	41	BSH15163	70	BSH2570
27	BSH7527	27	BSH1027	46	BSH1546	75	BSH2575
30	BSH7530	30	BSH1030	50	BSH1550	80	BSH2580
32	BSH7532	32	BSH1032	55	BSH1555	85	BSH2585
36	BSH7536	36	BSH1036	60	BSH1560	90	BSH2590
41	BSH75163	41	BSH10163	65	BSH1565	95	BSH2595
46	BSH7546	46	BSH1046	70	BSH1570	100	BSH25100
50	BSH7550	50	BSH1050	75	BSH1575	105	BSH25105
–	–	55	BSH1055	80	BSH1580	110	BSH25110
–	–	60	BSH1060	85	BSH1585	115	BSH25115
–	–	65	BSH1065	90	BSH1590	120	BSH25120
–	–	70	BSH1070	95	BSH1595	125	BSH25125
–	–	75	BSH1075	100	BSH15100	135	BSH25135
–	–	80	BSH1080	105	BSH15105	140	BSH25140
–	–	85	BSH1085	110	BSH15110	145	BSH25145
–	–	90	BSH1090	115	BSH15115	150	BSH25150
–	–	95	BSH1095	–	–	155	BSH25155
–	–	100	BSH10100	–	–	–	–

IMPERIAL SOCKETS													
¾" Square Drive		1" Square Drive				1½" Square Drive				2½" Square Drive			
A/F (inch)	Model Number	A/F (inch)	Model Number	A/F (inch)	Model Number	A/F (inch)	Model Number	A/F (inch)	Model Number	A/F (inch)	Model Number	A/F (inch)	Model Number
¾"	BSH7519	¾"	BSH1019	2 5/16"	BSH10231	1 7/16"	BSH15144	2 13/16"	BSH15281	2 7/16"	BSH25244	4 3/16"	BSH25419
⅞"	BSH75088	⅞"	BSH10088	2 3/8"	BSH10238	1½"	BSH1538	2 7/8"	BSH15288	2½"	BSH25250	4¼"	BSH25425
15/16"	BSH75094	15/16"	BSH10094	2 7/16"	BSH10244	1 9/16"	BSH15156	2 15/16"	BSH1575	2 13/16"	BSH2565	4 5/16"	BSH25110
1 1/16"	BSH7527	1 1/16"	BSH1027	2½"	BSH10250	1⅝"	BSH15163	3"	BSH15300	2⅝"	BSH25263	4⅜"	BSH25438
1 3/16"	BSH7530	1 3/16"	BSH1030	2 9/16"	BSH1065	1 11/16"	BSH1543	3 1/16"	BSH15306	2 11/16"	BSH25269	4½"	BSH25450
1¼"	BSH75125	1¼"	BSH10125	2⅝"	BSH10263	1¾"	BSH15175	3⅛"	BSH15313	2¾"	BSH2570	4⅝"	BSH25463
1 5/16"	BSH75131	1 5/16"	BSH10131	2 11/16"	BSH10269	1 13/16"	BSH1546	3 3/16"	BSH15319	2 11/16"	BSH25281	4¾"	BSH25475
1⅜"	BSH7535	1⅜"	BSH1035	2¾"	BSH1070	1⅞"	BSH15188	3¼"	BSH15325	2⅞"	BSH25288	4⅞"	BSH25488
1 7/16"	BSH75144	1 7/16"	BSH10144	2 13/16"	BSH10281	1 15/16"	BSH15194	3⅜"	BSH15338	2 15/16"	BSH2575	5"	BSH25500
1½"	BSH7538	1½"	BSH1038	2⅞"	BSH10288	2"	BSH15200	3½"	BSH15350	3"	BSH25300	5⅛"	BSH25513
1 9/16"	BSH75156	1 9/16"	BSH10156	2 15/16"	BSH1075	2 1/16"	BSH15206	3⅝"	BSH15363	3 1/16"	BSH25306	5 3/16"	BSH25519
1⅝"	BSH75163	1⅝"	BSH10163	3"	BSH10300	2⅛"	BSH15213	3¾"	BSH1595	3⅛"	BSH25313	5¼"	BSH25525
1 11/16"	BSH7543	1 11/16"	BSH1043	3 1/16"	BSH10306	2 3/16"	BSH15219	3⅞"	BSH15388	3 3/16"	BSH25319	5⅜"	BSH25538
1¾"	BSH75175	1¾"	BSH10175	3⅛"	BSH10313	2¼"	BSH15225	3 15/16"	BSH15100	3¼"	BSH25325	5½"	BSH25140
1 13/16"	BSH7546	1 13/16"	BSH1046	3 3/16"	BSH10319	2 5/16"	BSH15231	4"	BSH15400	3⅜"	BSH25338	5¾"	BSH25575
1⅞"	BSH75188	1⅞"	BSH10188	3¼"	BSH10325	2⅜"	BSH15238	4⅛"	BSH15105	3½"	BSH25350	5⅞"	BSH25150
1 15/16"	BSH75194	1 15/16"	BSH10194	3⅜"	BSH10338	2 7/16"	BSH15244	4 3/16"	BSH15419	3⅝"	BSH25363	6"	BSH25600
2"	BSH75200	2"	BSH10200	3½"	BSH10350	2½"	BSH15250	4¼"	BSH15425	3¾"	BSH2595	6⅛"	BSH25613
–	–	2 1/16"	BSH10206	3⅝"	BSH10363	2 9/16"	BSH1565	4 5/16"	BSH15110	3⅞"	BSH25388	–	–
–	–	2⅛"	BSH10213	3¾"	BSH1095	2⅝"	BSH15263	4⅜"	BSH15438	3 15/16"	BSH25100	–	–
–	–	2 3/16"	BSH10219	3⅞"	BSH10388	2 11/16"	BSH15269	4½"	BSH15450	4"	BSH25400	–	–
–	–	2¼"	BSH10225	–	–	2¾"	BSH1570	4⅝"	BSH15463	4⅛"	BSH25105	–	–

Back-Up Spanners for Torque Wrenches

▼ **BUS03 Back-Up Spanner** (safety cable not shown)



BUS
Series

Hexagon Sizes (A/F):
27 - 120 mm

Hexagon Sizes (A/F):
1 1/16 - 4 15/16 inch

Back-Up Spanners

Hands free operation of a hydraulic torque wrench improves the safety of the operator significantly.

Enerpac Back-Up Spanners are a hands free tool that eliminates the need to use a flogging spanner as a backing tool.

The Back-Up Spanners have been specifically designed to prevent them from locking onto the nut during bolt torqueing operations. They fit easily onto the back nut and prevent it from turning during make up or break out of bolted joints.

- **Hands free solution – improves operator safety**
- **Eliminates the need for flogging spanners**
- **Speeds up the bolting process**
- **Includes safety cable with quick-connect carabiner's, stainless steel tethers and secure Allen-key fixings**
- **Won't lock on during operations**
- **Lightweight, spark-free and non-impact for improved safety and ease of use.**
- **Two hexagon sizes in one tool, so fewer tools to carry.**

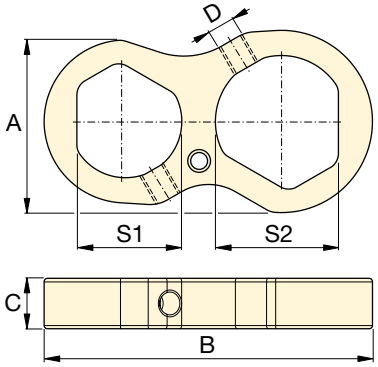

▼ **SELECTION CHART BACK-UP SPANNERS**

Hexagon Sizes (A/F) S1 to S2 (mm)	Hexagon Sizes (A/F) S1 to S2 (inch)	Model Number	Dimensions (mm) A	B	C	D	(kg)
27 - 32	1 1/16 - 1 1/4"	**BUS01**	51	98	15	M8	0,3
36 - 41	1 7/16 - 1 5/8"	**BUS02**	62	119	15	M8	0,4
46 - 50	1 13/16 - 2"	**BUS03**	75	141	20	M8	0,6
55 - 60	2 3/16 - 2 3/8"	**BUS04**	89	166	20	M12	0,8
65 - 70	2 9/16 - 2 3/4"	**BUS05**	100	190	25	M16	1,0
75 - 80	2 15/16 - 3 1/8"	**BUS06**	112	213	25	M16	1,3
–	3 1/2 - 3 7/8"	**BUS07**	135	257	30	M20	2,2
–	4 1/4 - 4 5/8"	**BUS08**	163	310	30	M20	3,3
85 - 90	-	**BUS09**	126	242	25	M16	1,7
95 - 100	3 3/4 - 3 15/16"	**BUS10**	138	266	30	M20	2,3
105 - 110	4 1/8 - 4 15/16"	**BUS11**	153	297	30	M20	3,1
115 - 120	-	**BUS12**	165	320	30	M20	3,5

▼ *Enerpac Back-Up Spanners to be used to stop back nut from turning during make up or break out.*



STTL-Series, Safe T™ Torque Lock

ENERPAC

▼ Shown: **STTLS31055 Safe T™ Torque Lock**



Hands-free torque wrench system

Safe T™ Torque Lock

The Safe T™ Torque Lock is suitable for all bolted applications from 190 Nm to 15.000 Nm using a heavy duty impact socket.

The patented mechanical locking system creates a hands-free torque wrench solution suitable for Enerpac only square drive tools.

Suitable for:

S-Series	RSQ-Series
S3000X	RSQ3000
S6000X	RSQ5000
S11000X	RSQ11000

Safety – Safe T™ Torque Lock

- Transforming Enerpac S-Series & RSQ-Series wrenches into a dedicated hands-free tool
- Improves operator safety during bolting operations by minimizing exposure to pinch points and high pressure hydraulic connections
- Grips securely to the application in any orientation, including inverted positions
- Minimizes drop hazards of falling tools
- Reduces operator fatigue on overreaching or awkward positioning of the tool.

Simplicity

- With one twist of the locking collar the Safe T™ Torque Lock grips onto the application, firmly holding the full tool weight in place
- Assembles onto the torque wrench with one push of the square drive quick release button for tightening or loosening
- Locking feature reduces the number of tool lifts dramatically.

Versatility

- Suitable for both S-Series & RSL-Series square drive wrenches
- Simple twist & lock mechanism is user friendly, easy to operate
- No additional loose components like reaction washers are needed.



▲ *Hands-free torque wrench system: STLLS-model with S-Series torque wrench. The square drive of the wrench can easily be exchanged by the Safe T™ Torque Lock model.*



Back-Up Spanners, BUS-Serie

To be used to stop back nut from turning during make up or break out. Two hexagon sizes in one tool.

Page: 217

Safe T™ Torque Lock – Hands-free torque wrench system

Common Torque Lock Applications:

- Oil & Gas flanges
- Tower Crane installation
- Machine installation/assembly (Mining),
- Wind Tower installation etc.

Industries

- Oil & Gas, Petrochemical
- Wind Power Generation
- Mining
- Marine
- Manufacturing
- Rail and more

STTL Series



Hexagon Range (A/F):
46 - 75 mm

Hexagon Range (A/F):
1 13/16 - 3 1/8 inch

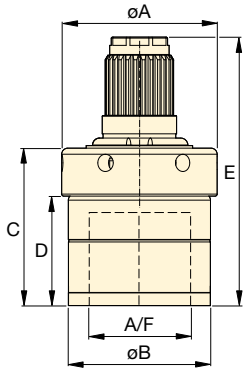

STTLS for S-Series Spline Fitting

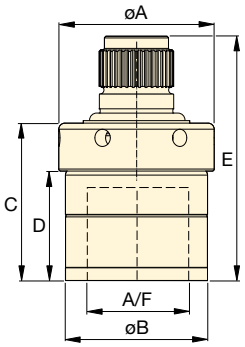

STTLR for RSQ-Series Spline Fitting

IMPORTANT:
Safe T™ Torque Lock not suitable for use on PTFE coated nuts.

Bolting Integrity Software

Enerpac Bolting Integrity Software Solutions play a key role in implementing and managing an Integrity Program for bolted connections.
The software offers Tool selection, Bolt Load calculations and Tool pressure settings, as well as, a combined Application Data Sheet and Joint Completion Report. Custom Joint information can also be entered.

Page: 412

Hexagon Sizes A/F (inch)	Hexagon Sizes A/F (mm)	For use with torque wrench model	Safe T™ Torque Lock Model Number: For S-Series Spline Fitting	Safe T™ Torque Lock Model Number: For RSQ-Series Spline Fitting	Dimensions (inch) A	B	C	D	E	(lbs)	Dimensions (mm) A	B	C	D	E	(kg)
1 13/16	46	S3000X	STTLS31046	-	3.0	2.8	3.1	2.1	5.2	4.4	77	71	78	54	133	2,0
		RSQ3000	-	STTLR31046					4.8	4.2					121	1,9
2	50	S3000X	STTLS31550	–	3.5	3.2	3.1	2.1	5.2	5.7	89	82	78	54	133	2,6
		RSQ3000	–	STTLR31550					4.8	5.7					123	2,6
2 3/16	55	S3000X	STTLS31055	-	3.7	3.4	3.3	2.3	5.4	6.6	93	86	83	58	138	3,0
		RSQ3000	-	STTLR31055					5.1	6.4					130	2,9
2 3/8	–	RSQ3000	–	STTLR315238	3.9	3.6	3.6	2.6	5.4	7.7	99	92	91	67	136	3,5
2	50	RSQ5000	–	STTLR51550	3.5	3.2	3.1	2.1	5.2	5.9	89	82	78	54	132	2,7
–	60	S6000X	STTLS61560M	-	3.9	3.6	3.4	2.5	5.9	8.2	99	92	86	62	150	3,7
		RSQ5000	-	STTLR51560M					5.7	8.2					145	3,7
2 3/8	–	S6000X	STTLS615238	–	3.9	3.6	3.6	2.6	6.0	8.4	99	92	91	67	154	3,8
		RSQ5000		STTLR515238					5.9	8.4					150	3,8
2 9/16	65	S6000X	STTLS61565	-	4.2	3.9	4.2	2.9	6.8	11.7	107	100	108	74	172	5,3
		RSQ5000	-	STTLR51565					6.6	11.9					168	5,4
2 3/4	70	S6000X	STTLS61570	–	4.5	4.2	4.3	3.0	6.8	13.0	114	107	109	76	173	5,9
		RSQ5000		STTLR51570					6.7	13.2					169	6,0
2 15/16	75	S6000X	STTLS61575	-	4.4	4.1	4.4	3.1	7.0	12.3	112	105	113	80	177	5,6
		RSQ5000	-	STTLR51575					6.9	13.2					173	5,8
–	60	S11000X	STTLS111560M	-	3.9	3.6	3.4	2.5	6.6	9.3	99	92	86	62	167	4,2
		RSQ11000	-	STTLR111560M					6.1	9.3					156	4,2
2 9/16	65	S11000X	STTLS111565	-	4.2	3.9	4.2	2.9	7.5	12.8	107	100	107	74	189	5,8
		RSQ11000	-	STTLR111565					7.0	12.8					178	5,8
2 3/4	70	S11000X	STTLS111570	–	4.5	4.2	4.3	3.0	7.5	14.1	114	107	109	76	191	6,4
		RSQ11000		STTLR111570					7.1	14.3					181	6,5
2 15/16	75	S11000X	STTLS111575	-	4.4	4.1	4.4	3.1	7.7	13.2	112	105	113	80	195	6,0
		RSQ11000	-	STTLR111575					7.2	13.2					183	6,0
3 1/8	–	S11000X	STTLS1115318	–	4.8	4.5	4.5	3.2	7.8	16.1	122	115	115	81	197	7,3
		RSQ11000	-	STTLR1115318					7.3	16.3					185	7,4

W-Series, Low Profile Hexagon Torque Wrenches ENERPAC

▼ Shown: **W4206X hexagon cassette with W4000PX drive unit**



Safety and Performance

- **Superior strength to size ratio provides easy access to difficult to reach applications without sacrificing endurance**
- **30° rotation angle and rapid return stroke provide fast operation**
- **Tough manifold design with added safety feature for enhanced operator safety.**

Simplicity

- **Fast release drive unit enables rapid exchange of cassettes, no tools required**
- **Quick and easy disassembly for maintenance without special tools**
- **Drive units include robust handle which mounts on both sides of cassettes to allow for extra maneuverability.**

Versatility

- **Available with optional enhanced tilt and swivel TSP300 manifold for horizontal and vertical maneuverability, with greater durability** [1]
- **X-Edition drive units, cassettes and most accessories are compatible with standard edition tools** [1]
- **Drive unit compatible with UltraSlim W-SL cassettes.**

Accuracy

- **Constant torque output provides accuracy of ±3% across full stroke.**

[1] TSP300 is designed for X-Edition tools only, and is not compatible with previous edition tools. For replacement components for existing tools, refer to repair sheet on www.enerpac.com



Two Handle Styles

Robust angled positioning handle comes standard with every W-Series (X-Edition) drive unit.

Compatible with W-Series (X-Edition) Cassettes	Model Nr. Angled positioning handles (standard)	Model Nr. Straight positioning handles (optional)
W2000X, W4000X	**SWH6A**	**SWH6S**
W8000X, W15000X	**SWH10A**	**SWH10S**
W22000X, W35000X	**SWH10EA** [2]	

[2] SWH10EA is an eyebolt handle.



TSP - Pro Series Swivel

The optional TSP300 tilt and swivel manifold with robust interlocking design provides 360° X-axis rotation and 160° Y-axis rotation.

How to Order [1]

Factory fitted to W-Series (X-Edition) drive units: Insert a "P" prior to the "X" in the tool model number, example: **W2000PX**.

Order as an accessory using the model number: **TSP300**, which can be fitted to existing W-Series (X-Edition) drive units. Includes male and female couplers.

Page: 232



CE - ATEX declared

All W-Series X-edition drive units are CE - ATEX declared. All W-Series X-edition hexagon cassettes are CE - ATEX declared and are shipped complete with a calibration certificate.

CE II 2 GD T4



Back-Up Spanners, BUS-Series

To be used to stop the back nut from turning during make up or break out. Two hexagon sizes in one tool.

Page: 217

Double-Acting Hydraulic Hexagon Torque Wrenches, X-Edition

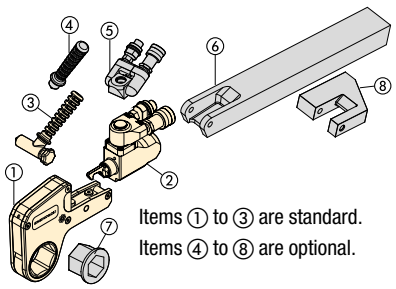

① Hexagon Cassette (pages 222-229)
② Drive Unit (page 221)
③ Angled Positioning Handle (page 220)
④ Straight Positioning Handle (page 220)
⑤ Pro Series Swivel (page 232)
⑥ Extended Reaction Arm (page 232)
⑦ Reducer Insert (pages 222-229)
⑧ Reaction Paddle (page 232)

W Series X-Edition



Nominal Torque at 690 bar:
47.454 Nm

Hexagon Range:
30 - 155 mm / 1 1/16 - 6 1/8"

Nose Radius:
31 - 115 mm

Maximum Operating Pressure:
690 bar

DRIVE UNIT AND INTERCHANGEABLE CASSETTE SELECTION

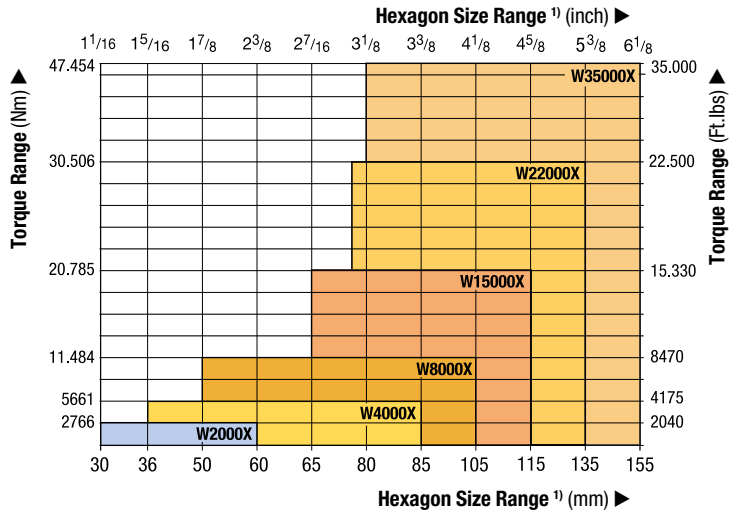

1) See page 407 for table of hexagon sizes of bolts, nuts and related thread diameters.



Torque Wrench Pump Selection Matrix

For optimum speed and performance see the torque wrench and pump matrix.

Page: 265

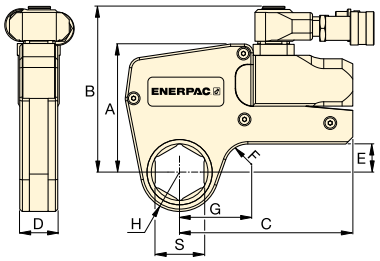



These rigid steel wrenches with low profile interchangeable hexagon cassettes guarantee durability and maximum versatility in bolting applications. ▶

▼ SELECTION CHART

Hexagon Range *  Page: 222		Nominal Torque at 690 bar		Drive Unit Model Number ** 	Minimum Torque		Dimensions (mm) (see pages 222-229 for dimensions G, H and S)						Weight (drive unit without hexagon cassette)
(mm)	(inch)	(Nm)	(Ft.lbs)		(Nm)	(Ft.lbs)	A	B	C	D	E	F	(kg)
30 - 60	1 1/16 - 2 3/8	2766	2040	**W2000X**	276	204	109	141	148	32	24	20	1,4
36 - 85	1 5/16 - 3 3/8	5661	4175	**W4000X**	566	417	136	167	178	41	33	20	2,0
50 - 105	1 7/8 - 4 1/8	11.484	8470	**W8000X**	1148	847	172	205	208	53	42	25	3,0
65 - 115	2 7/16 - 4 5/8	20.785	15.330	**W15000X**	2078	1533	207	240	253	63	50	20	5,0
75 - 135	2 15/16 - 5 3/8	30.506	22.500	**W22000X**	3050	2250	227	266	297	77	48	35	7,7
80 - 155	3 1/8 - 6 1/8	47.454	35.000	**W35000X**	4745	3500	268	301	345	91	69-73	50	11,4

* With in-line reaction foot.
** To order a W-series wrench fitted with the TSP swivel, suffix the model number with "**P**". Example: **W2000PX**.

Tel: +45 63 12 83 00 | Email: ps@hymatik.com | www.hymatik.com | Hvidkaervej 27a, DK-5250 Odense SV, Denmark

W2000X, Inch-Cassettes & Reducer Inserts

ENERPAC

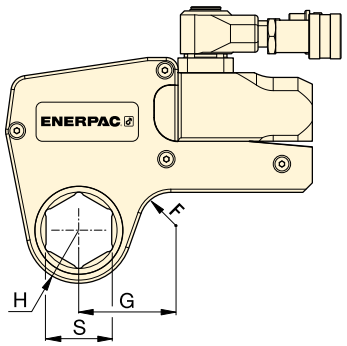

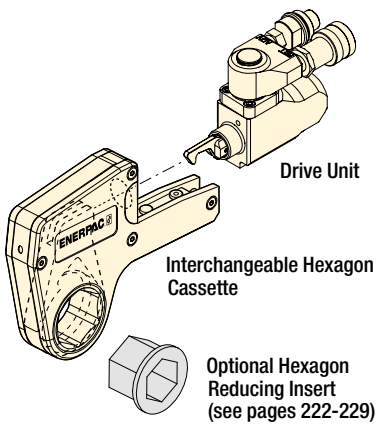

W Series X-Edition



Nominal Torque at 690 bar:
2766 Nm

Hexagon Range:
1 1/16 - 2 3/8 inch

Maximum Operating Pressure:
690 bar



Metric Sizes
For metric sizes of hexagon cassettes and reducer inserts see:
Page: 228

Hexagon Bolt and Nut Sizes
See the table for hexagon sizes of bolts, nuts and related thread diameters.
Page: 407

▼ **SELECTION CHART**

Drive Unit Model Number	Hexagon Size [1] S (inch)	Nose Radius H (mm)	Dim. G (mm)	Model Number	(kg)	Hexagon Reducer (inch)	Model Number	Hexagon Reducer (inch)	Model Number	Hexagon Reducer (inch)	Model Number
W2000X	1 1/16	31,0	53,7	W2101X	2,1	–	–	–	–	–	–
	1 1/8	31,0	53,7	W2102X	2,1	–	–	–	–	–	–
	1 3/16	31,0	53,7	W2103X	2,1	–	–	–	–	–	–
	1 1/4	31,0	53,7	W2104X	2,1	–	–	–	–	–	–
	1 5/16	31,0	53,7	W2105X	2,1	–	–	–	–	–	–
	1 3/8	31,0	53,7	W2106X	2,1	–	–	–	–	–	–
	1 7/16	31,0	53,7	W2107X	2,1	1 7/16 - 1 1/8	W2107R102	–	–	–	–
	1 1/2	33,5	58,2	W2108X	2,2	–	–	–	–	–	–
	1 9/16	33,5	58,2	W2109X	2,2	–	–	–	–	–	–
	1 5/8	33,5	58,2	W2110X	2,2	1 5/8 - 1 1/4	W2110R104	1 5/8 - 1 3/16	W2110R103	–	–
	1 11/16	36,5	60,5	W2111X	2,2	–	–	–	–	–	–
	1 3/4	36,5	60,5	W2112X	2,2	–	–	–	–	–	–
	1 13/16	36,5	60,5	W2113X	2,2	1 13/16 - 1 7/16	W2113R107	1 13/16 - 1 1/4	W2113R104	–	–
	1 7/8	39,0	63,1	W2114X	2,2	–	–	–	–	–	–
	1 15/16	39,0	63,1	W2115X	2,2	–	–	–	–	–	–
	2	39,0	63,1	W2200X	2,2	2 - 1 5/8	W2200R110	2 - 1 7/16	W2200R107	–	–
	2 1/16	41,8	68,6	W2201X	2,3	–	–	–	–	–	–
	2 1/8	41,8	68,6	W2202X	2,3	–	–	–	–	–	–
	2 3/16	41,8	68,6	W2203X	2,3	2 3/16 - 1 13/16	W2203R113	2 3/16 - 1 5/8	W2203R110	2 3/16 - 1 7/16	W2203R107
	2 1/4	44,5	64,8	W2204X	2,2	–	–	–	–	–	–
	2 5/16	44,5	64,8	W2205X	2,2	–	–	–	–	–	–
	2 3/8	44,5	64,8	W2206X	2,2	2 3/8 - 2	W2206R200	2 3/8 - 1 7/8	W2206R114	2 3/8 - 1 13/16	W2206R113
	–	–	–	–	–	2 3/8 - 1 1/2	W2206R108	2 3/8 - 1 7/16	W2206R107	2 3/8 - 1 5/16	W2206R110

[1] See page 407 for table of hexagon sizes of bolts, nuts and related thread diameters.

W4000X-Series, Inch-Cassettes & Reducer Inserts

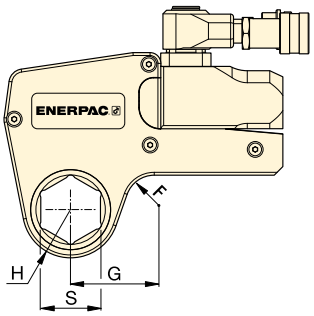

Nominal Torque at 690 bar:
5661 Nm

Hexagon Range:
1 5/16 - 3 3/8 inch

Maximum Operating Pressure:
690 bar

W Series X-Edition



Drive Unit Model Number	Hexagon Size [1] S (inch)	Nose Radius H (mm)	Dim. G (mm)	Model Number	(kg)	Hexagon Reducer (inch)	Model Number	Hexagon Reducer (inch)	Model Number	Hexagon Reducer (inch)	Model Number
W4000X	1 5/16	37,0	61,0	W4105X	3,7	–	–	_	–	–	–
	1 3/8	37,0	61,0	W4106X	3,7	–	–	–	–	–	–
	1 7/16	37,0	61,0	W4107X	3,7	–	–	–	–	–	–
	1 1/2	37,0	61,0	W4108X	3,7	–	–	–	–	–	–
	1 9/16	37,0	61,0	W4109X	3,7	–	–	–	–	–	–
	1 5/8	37,0	61,0	W4110X	3,7	–	–	–	–	–	–
	1 11/16	39,5	64,0	W4111X	3,8	–	–	–	–	–	–
	1 3/4	39,5	64,0	W4112X	3,8	–	–	–	–	–	–
	1 13/16	39,5	64,0	W4113X	3,8	–		–	–	–	–
	1 7/8	41,5	66,7	W4114X	3,9	–	–	–	–	–	–
	1 15/16	41,5	66,7	W4115X	3,9	–	–	–	–	–	–
	2	41,5	66,7	W4200X	3,9	2 - 1 7/16	W4200R107	–	–	–	
	2 1/16	44,0	73,4	W4201X	4,0	–	–	–	–	–	–
	2 1/8	44,0	73,4	W4202X	4,0	–	–	–	–	–	–
	2 3/16	44,0	73,4	W4203X	4,0	2 3/16 - 1 5/8	W4203R110	2 3/16 - 1 7/16	W4203R107	2 3/16 - 1 1/4	W4203R104
	2 1/4	46,5	70,6	W4204X	4,1	–	–	–	–	–	–
	2 5/16	46,5	70,6	W4205X	4,1	–	–	–	–	–	–
	2 3/8	46,5	70,6	W4206X	4,1	2 3/8 - 2	W4206R200	2 3/8 - 1 13/16	W4206R113	2 3/8 - 1 7/16	W4206R107
	–	–	–	–	–	2 3/8 - 1 3/8	W4206R106	–	–	–	–
	2 7/16	49,5	76,2	W4207X	4,1	2 7/16 - 2	W4207R200	–	–	–	–
	2 1/2	49,5	76,2	W4208X	4,1	2 1/2 - 2	W4208R200	2 1/2 - 1 7/16	W4208R113	2 1/2 - 2 1/16	W4208R201
	2 9/16	49,5	76,2	W4209X	4,1	2 9/16 - 2 3/16	W4209R203	2 9/16 - 2 1/8	W4209R202	2 9/16 - 2 1/16	W4209R201
	–	–	–	–	–	2 9/16 - 2	W4209R200	2 9/16 _ 1 13/16	W4209R113	–	–
	2 5/8	52,5	78,3	W4210X	4,2	–	–	–	–	–	–
	2 11/16	52,5	78,3	W4211X	4,2	–	–	–	–	–	–
	2 3/4	52,5	78,3	W4212X	4,2	2 3/4 - 2 3/8	W4212R206	2 3/4 - 2 3/16	W4212R203	2 3/4 - 2 1/8	W4212R202
	2 13/16	55,3	81,6	W4213X	4,3	–	–	–	–	–	–
	2 7/8	55,3	81,6	W4214X	4,3	–	–	–	–	–	–
	2 15/16	55,3	81,6	W4215X	4,3	2 15/16 - 2 9/16	W4215R209	2 15/16 - 2 3/8	W4215R206	2 15/16 - 2 3/16	W4215R203
	–	–	–	–	–	2 15/16 - 2	W4215R200	–	–	–	–
	3	58,5	83,5	W4300X	4,4	3 - 2 3/16	W4300R203	–	–	–	–
	3 1/16	58,5	83,5	W4301X	4,4	–	–	–	–	–	–
	3 1/8	58,5	83,5	W4302X	4,4	3 1/8 - 2 3/4	W4302R212	3 1/8 - 2 9/16	W4302R209	3 1/8 - 2 3/8	W4302R206
	–	–	–	–	–	3 1/8 - 2 5/16	W4302R205	3 1/8 - 2 1/4	W4302R204	3 1/8 - 2 3/16	W4302R203
	–	–	–	–	–	3 1/8 - 2 3/16	W4302R203	3 1/8 - 2 1/8	W4302R202	3 1/8 - 2	W4302R200
	3 3/16	62,0	85,5	W4303X	4,5	–	–	–	–	–	–
	3 1/4	62,0	85,5	W4304X	4,5	–	–	–	–	–	–
	3 5/16	62,0	85,5	W4305X	4,5	–	–	–	–	–	–
	3 3/8	62,0	85,5	W4306X	4,5	–	–	–	–	–	–

[1] See page 407 for table of hexagon sizes of bolts, nuts and related thread diameters.

Tel: +45 63 12 83 00 | Email: ps@hymatik.com | www.hymatik.com | Hvidkaervej 27a, DK-5250 Odense SV, Denmark

W8000X-Series, Inch-Cassettes & Reducers

ENERPAC

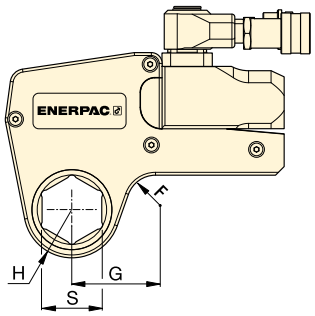

Nominal Torque at 690 bar:
11.484 Nm

Hexagon Range:
1⅞ - 4⅛ inch

Maximum Operating Pressure:
690 bar

W
Series
X-Edition



▼ **SELECTION CHART**

Drive Unit Model Number	Hexagon Size [1] S (inch)	Nose Radius H (mm)	Dim. G (mm)	Model Number	(kg)	Hexagon Reducer (inch)	Model Number	Hexagon Reducer (inch)	Model Number	Hexagon Reducer (inch)	Model Number
W8000X	1⅞	45,0	78,2	W8114X	8,1	–	–	–	–	–	–
	1 15/16	45,0	78,2	W8115X	8,1	–	–	–	–	–	–
	2	45,0	78,2	W8200X	8,1	–	–	–	–	–	–
	2 1/16	48,0	80,0	W8201X	8,1	–	–	–	–	–	–
	2⅛	48,0	80,0	W8202X	8,1	–	–	–	–	–	–
	2 3/16	48,0	80,0	W8203X	8,1	–	–	–	–	–	–
	2¼	51,0	82,5	W8204X	8,1	–	–	–	–	–	–
	2 5/16	51,0	82,5	W8205X	8,1	–	–	–	–	–	–
	2⅜	51,0	82,5	W8206X	8,1	–	–	–	–	–	–
	2 7/16	52,5	85,9	W8207X	8,1	–	–	–	–	–	–
	2½	52,5	85,9	W8208X	8,1	–	–	–	–	–	–
	2 9/16	52,5	85,9	W8209X	8,1	2 9/16 - 2	W8209R200		–		
	2⅝	56,0	84,8	W8210X	8,1	–	–	–	–	–	–
	2 11/16	56,0	84,8	W8211X	7,9	–	–	–	–	–	–
	2¾	56,0	84,8	W8212X	7,9	2¾ - 2 3/16	W8212R203		–		
	2 13/16	58,0	85,0	W8213X	7,9	–	–	–	–	–	–
	2⅞	58,0	85,0	W8214X	7,9	–	–	–	–	–	–
	2 15/16	58,0	85,0	W8215X	7,9	2 15/16 - 2⅜	W8215R206	2 15/16 - 2 3/16	W8215R203		
	3	60,5	89,5	W8300X	8,0	–	–	–	–	–	–
	3 1/16	60,5	89,5	W8301X	8,0	–	–	–	–	–	–
	3⅛	60,5	89,5	W8302X	8,0	3⅛ - 2 9/16	W8302R209	3⅛ - 2⅜	W8302R206	3⅛ - 2 3/16	W8302R203
	–	–	–	–	–	3⅛ - 2	W8302R200		–		
	3 3/16	66,0	92,2	W8303X	8,2	–	–	–	–	–	–
	3¼	66,0	92,2	W8304X	8,2	–	–	–	–	–	–
	3 5/16	66,0	92,2	W8305X	8,2	–	–	–	–	–	–
	3⅜	66,0	92,2	W8306X	8,2	–	–	–	–	–	–
	3 7/16	66,0	92,2	W8307IX	8,2	–	–	–	–	–	–
	3½	66,0	92,2	W8308X	8,2	3½ - 3	W8308R300	3½ - 2 15/16	W8308R215	3½ - 2¾	W8308R212
	3 9/16	74,0	102,9	W8309X	8,8	–	–	–	–	–	–
	3⅝	74,0	102,9	W8310X	8,8	–	–	–	–	–	–
	3 11/16	74,0	102,9	W8311X	8,8	–	–	–	–	–	–
	3¾	74,0	102,9	W8312X	8,8	3¾ - 3⅛	W8312R302	3¾ - 2 15/16	W8312R215	3¾ - 2¾	W8312R212
	3 13/16	74,0	102,9	W8313X	8,8	–	–	–	–	–	–
	3⅞	74,0	102,9	W8314X	8,8	3⅞ - 3⅛	W8314R302	3⅞ - 2 15/16	W8314R215		–
	3 15/16	79,5	110,0	W8315X	9,3	–	–	–	–	–	–
	4	79,5	110,0	W8400X	9,3	–	–	–	–	–	–
	4 1/16	79,5	110,0	W8401IX	9,3	–	–	–	–	–	–
	4⅛	79,5	110,0	W8402X	9,3	–	–	–	–	–	–

[1] See page 407 for table of hexagon sizes of bolts, nuts and related thread diameters.

W15000X-Series, Inch-Cassettes & Reducer Inserts

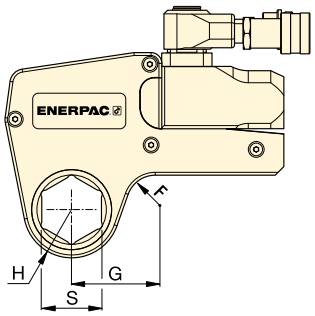

Nominal Torque at 690 bar:
20.785 Nm

Hexagon Range:
2⅛ - 4⅝ inch

Maximum Operating Pressure:
690 bar

W
Series
X-Edition



▼ **SELECTION CHART**

Drive Unit Model Number	Hexagon Size [1] S (inch)	Nose Radius H (mm)	Dim. G (mm)	Model Number	(kg)	Hexagon Reducer (inch)	Model Number	Hexagon Reducer (inch)	Model Number	Hexagon Reducer (inch)	Model Number
W15000X	2 7/16	59,0	88,6	W15207X	13,6	–	–	–	–	–	–
	2 1/2	59,0	88,6	W15208X	13,6	–	–	–	–	–	–
	2 9/16	59,0	88,6	W15209X	13,6	–	–	–	–	–	–
	2 5/8	59,0	88,6	W15210X	13,6	–	–	–	–	–	–
	2 11/16	59,0	88,6	W15211X	13,6	–	–	–	–	–	–
	2 3/4	59,0	88,6	W15212X	13,6	–	–	–	–	–	–
	2 13/16	62,0	90,5	W15213X	13,7	–	–	–	–	–	–
	2 7/8	62,0	90,5	W15214X	13,7	–	–	–	–	–	–
	2 15/16	62,0	90,5	W15215X	13,7	–	–	–	–	–	–
	3	64,5	92,9	W15300X	13,8	3 - 2 1/8	W15300R202	–	–	–	–
	3 1/16	64,5	92,9	W15301X	13,8	–	–	–	–	–	–
	3 1/8	64,5	92,9	W15302X	13,8	3 1/8 - 2 9/16	W15302R209	–	–	–	
	3 3/16	69,5	96,6	W15303X	14,1	–	–	–	–	–	–
	3 1/4	69,5	96,6	W15304X	14,1	–	–	–	–	–	–
	3 5/16	69,5	96,6	W15305X	14,1	–	–	–	–	–	–
	3 3/8	69,5	96,6	W15306X	14,1	–	–	–	–	–	–
	3 7/16	69,5	96,6	W15307IX	14,1	–	–	–	–	–	–
	3 1/2	69,5	96,6	W15308X	14,1	3 1/2 - 2 15/16	W15308R215	3 1/2 - 2 3/4	W15308R212	–	–
	3 9/16	75,0	101,8	W15309X	14,6	–	–	–	–	–	–
	3 5/8	75,0	101,8	W15310X	14,6	–	–	–	–	–	–
	3 11/16	75,0	101,8	W15311X	14,6	–	–	–	–	–	–
	3 3/4	75,0	101,8	W15312X	14,6	3 3/4 - 3 1/8	W15312R302	3 3/4 - 2 15/16	W15312R215	–	–
	3 13/16	75,0	101,8	W15313X	14,5	–	–	–	–	–	–
	3 7/8	75,0	101,8	W15314X	14,5	3 7/8 - 3 1/8	W15314R302	3 7/8 - 2 15/16	W15314R215	–	–
	3 15/16	80,5	103,1	W15315X	14,8	–	–	–	–	–	–
	4	80,5	103,1	W15400X	14,8	–	–	–	–	–	–
	4 1/16	80,5	103,1	W15401IX	14,8	–	–	–	–	–	–
	4 1/8	80,5	103,1	W15402X	14,8	4 1/8 - 3 1/2	W15402R308	4 1/8 - 3 5/16	W15402R305	4 1/8 - 3 1/4	W15402R304
	4 3/16	80,5	103,1	W15403IX	14,8	–	–	–	–	–	–
	4 1/4	80,5	103,1	W15404X	14,8	4 1/4 - 3 1/2	W15404R308	4 1/4 - 3 1/8	W15404R302	–	–
	4 5/16	87,5	114,8	W15405X	15,1	–	–	–	–	–	–
	4 3/8	87,5	114,8	W15406X	15,1	–	–	–	–	–	–
	4 7/16	87,5	114,8	W15407X	15,1	–	–	–	–	–	–
	4 1/2	87,5	114,8	W15408IX	15,1	–	–	–	–	–	–
	4 9/16	87,5	114,8	W15409IX	15,1	–	–	–	–	–	–
	4 5/8	87,5	114,8	W15410IX	15,1	4 5/8 - 3 15/16	W15410R315	4 5/8 - 3 7/8	W15410R314	4 5/8 - 3 3/4	W15410R312
	–	–	–	–	–	4 5/8 - 3 1/2	W15410R308	–	–	–	–
	–	–	–	–	–	–	–	–	–	–	–

[1] See page 407 for table of hexagon sizes of bolts, nuts and related thread diameters.

W22000X, Inch-Cassettes & Reducers

ENERPAC

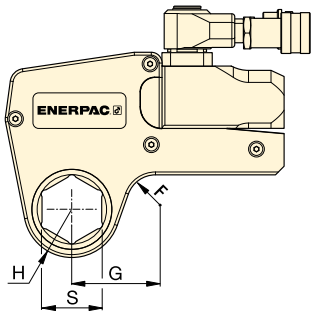

Nominal Torque at 690 bar:
30.506 Nm

Hexagon Range:
2 15/16 - 5 3/8 inch

Maximum Operating Pressure:
690 bar

W Series X-Edition



▼ **SELECTION CHART**

Drive Unit Model Number	Hexagon Size [1] S (inch)	Nose Radius H (mm)	G (mm)	Model Nr. Cassette	(kg)	Hexagon Reducer (inch)	Model Number Reducer	Hexagon Reducer (inch)	Model Number Reducer	Hexagon Reducer (inch)	Model Number Reducer
W22000X	2 15/16	67,0	102,1	W22215X	22,1	–	–	–	–	–	–
	3	67,0	102,1	W22300X	22,0	–	–	–	–	–	–
	3 1/16	67,0	102,1	W22301X	21,9	–	–	–	–	–	–
	3 1/8	67,0	102,1	W22302X	21,6	3 1/8 - 2 3/8	W22302R206	3 1/8 - 2 3/16	W22302R203	–	–
	3 3/16	72,4	107,4	W22303X	22,9	–	–	–	–	–	–
	3 1/4	72,4	107,4	W22304X	22,8	–	–	–	–	–	–
	3 5/16	72,4	107,4	W22305X	22,6	–	–	–	–	–	–
	3 3/8	72,4	107,4	W22306X	22,5	–	–	–	–	–	–
	3 7/16	72,4	107,4	W22307IX	22.8	–	–	–	–	–	–
	3 1/2	72,4	107,4	W22308X	22,2	3 1/2 - 2 3/4	W22308R212	3 1/2 - 2 9/16	W22308R209	3 1/2 - 2 3/8	W22308R206
	3 9/16	77,9	113,0	W22309X	23,4	–	–	–	–	–	–
	3 5/8	77,9	113,0	W22310X	23,3	–	–	–	–	–	–
	3 11/16	77,9	113,0	W22311X	23,1	–	–	–	–	–	–
	3 3/4	77,9	113,0	W22312X	22,9	3 3/4 - 2 15/16	W22312R215	–	–	–	–
	3 13/16	77,9	113,0	W22313X	22,8	–	–	–	–	–	–
	3 7/8	77,9	113,0	W22314X	22,6	3 7/8 - 3 1/8	W22314R302	3 7/8 - 2 15/16	W22314R215	3 7/8 - 2 3/4	W22314R212
	3 15/16	85,1	119,9	W22315X	24,3	–	–	–	–	–	–
	4	85,1	119,9	W22400X	24,1	–	–	–	–	–	–
	4 1/16	85,1	119,9	W22401IX	24,0	–	–	–	–	–	–
	4 1/8	85,1	119,9	W22402X	23,6	–	–	–	–	–	–
	4 3/16	85,1	119,9	W22403IX	23,6	–	–	–	–	–	–
	4 1/4	85,1	119,9	W22404X	24,6	4 1/4 - 3 1/2	W22404R308	4 1/4 - 3 1/8	W22404R302	4 1/4 - 2 15/16	W22404R215
	4 5/16	89,9	125,0	W22405X	24,6	–	–	–	–	–	–
	4 3/8	89,9	125,0	W22406X	24,5	–	–	–	–	–	–
	4 7/16	89,9	125,0	W22407X	24,3	–	–	–	–	–	–
	4 1/2	89,9	125,0	W22408IX	24,1	–	–	–	–	–	–
	4 9/16	89,9	125,0	W22409IX	23.9	–	–	–	–	–	–
	4 5/8	89,9	125,0	W22410IX	23,6	4 5/8 - 3 7/8	W22410R314	4 5/8 - 3 3/4	W22410R312	4 5/8 - 3 1/2	W22410R308
	4 3/4	95,0	130,0	W22412X	24,7		–	–	–	–	–
	4 7/8	95,0	130,0	W22414X	24,3	–	–	–	–	–	–
	5	95,0	130,0	W22500X	23,8	5 - 4 1/4	W22500R404	5 - 4 1/8	W22500R402	5 - 3 7/8	W22500R314
	5 1/8	100,0	134,8	W22502X	25,0	–	–	–	–	–	–
	5 3/16	100,0	134,8	W22503IX	24,8	–	–	–	–	–	–
	5 1/4	100,0	134,8	W22504IX	24,5	–	–	–	–	–	–
	5 3/8	100,0	134,8	W22506X	23,9	5 3/8 - 4 5/8	W22506R410	5 3/8 - 4 1/4	W22506R404	5 3/8 - 4 1/8	W22506R402
	–	–	–	W22506X	23,9	5 3/8 - 3 7/8	W22506R314	–	–	–	–

[1] See page 407 for table of hexagon sizes of bolts, nuts and related thread diameters.

W35000X, Inch-Cassettes & Reducer Inserts

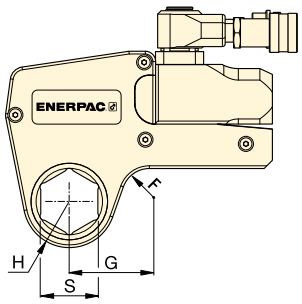

W Series X-Edition



Nominal Torque at 690 bar:
47.454 Nm

Hexagon Range:
3⅛ - 6⅛ inch

Maximum Operating Pressure:
690 bar

Hexagon Bolt and Nut Sizes
See the table for hexagon sizes of bolts, nuts and related thread diameters.
Page: 407



Back-Up Spanners
To be used to stop the back nut from turning during make up or break out. Two hexagon sizes in one tool.
Page: 217

▼ **SELECTION CHART**

Drive Unit Model Number	Hexagon Size S (inch)	Nose Radius H (mm)	G (mm)	Model Nr. Cassette	(kg)	Hexagon Reducer (inch)	Model Number Reducer
W35000X	3⅛	76,0	126,8	W35302X	32,8	3⅛ – 2	W35302R200
	3³⁄₁₆	76,0	126,8	W35303X	32,7	–	–
	3¼	76,0	126,8	W35304X	32,5	–	–
	3⁵⁄₁₆	76,0	126,8	W35305X	32,4	–	–
	3⅜	76,0	126,8	W35306X	32,2	–	–
	3⁷⁄₁₆	76,0	126,8	W35307IX	32,0	–	–
	3½	76,0	126,8	W35308X	31,8	3½ - 2⁵⁄₁₆	W35308R205
	3⁹⁄₁₆	81,5	132,5	W35309X	32,4	–	–
	3⅝	81,5	132,5	W35310X	33,3	–	–
	3¹¹⁄₁₆	81,5	132,5	W35311X	33,1	–	–
	3¾	81,5	132,5	W35312X	32,9	–	–
	3¹³⁄₁₆	81,5	132,5	W35313X	32,7	–	–
	3⅞	81,5	132,5	W35314X	32,4	3⅞ - 2¹¹⁄₁₆	W35314R211
	3¹⁵⁄₁₆	87,0	137,0	W35315X	34,1	3¹⁵⁄₁₆ - 2¹³⁄₁₆	W35315R213
	4	87,0	137,0	W35400X	33,9		–
	4¹⁄₁₆	87,0	137,0	W35401IX	33,7	–	–
	4⅛	87,0	137,0	W35402X	33,5	–	–
	4³⁄₁₆	87,0	137,0	W35403IX	33,3	–	–
	4¼	87,0	137,0	W35404X	33,0	4¼ - 3¹⁄₁₆	W35404R301
	4⁵⁄₁₆	93,0	143,0	W35405X	34,9	–	–
	4⅜	93,0	143,0	W35406X	34,7	–	–
	4⁷⁄₁₆	93,0	143,0	W35407X	34,5	–	–
	4½	93,0	143,0	W35408IX	34,3	–	–
	4⁹⁄₁₆	93,0	143,0	W35409IX	34,1	–	–
	4⅝	93,0	143,0	W35410IX	33,7	4⅝ - 3⅝	W35410R310
	4¾	98,5	148,5	W35412X	35,6	4¾ - 3¾	W35412R312
	4⅞	98,5	148,5	W35414X	34,9	–	–
	5	98,5	148,5	W35500X	34,3	5 - 4	W35500R400
	5⅛	103,0	153,0	W35502X	35,8	5⅛ - 4⅛	W35502R402
	5³⁄₁₆	103,0	153,0	W35503IX	35,6	–	–
	5¼	103,0	153,0	W35504IX	35,2	–	–
	5⅜	103,0	153,0	W35506X	34,6	5⅜ - 4⁵⁄₁₆	W35506R405
	5½	108,5	158,5	W35508X	36,2	–	–
	5⁹⁄₁₆	108,5	158,5	W35509X	36,0	–	–
	5⅝	108,5	158,5	W35510X	35,6	–	–
	5¾	108,5	164,0	W35512X	34,9	5¾ - 4¾	W35512R412
	5⅞	114,0	164,0	W35514X	36,7	5⅞ - 4⅞	W35514R414
	6	114,0	164,0	W35600X	36,1	–	
	6⅛	114,0	164,0	W35602X	35,3	6⅛ - 5⅛	W35602R502

W-Series, Metric Cassettes and Reducers

ENERPAC

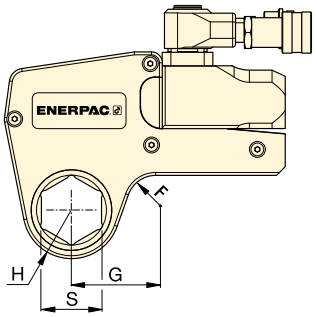

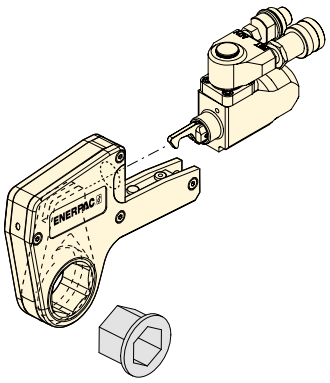

W
Series
X-Edition



Hexagon Range:
24 - 105 mm

Maximum Operating Pressure:
690 bar

▼ **SELECTION CHART**

Drive Unit Model Number	Hexagon Size [1] S (mm)	Nose Radius H (mm)	Dim. G (mm)	Model Nr. Cassette	(kg)	Hexagon Reducer (mm)	Model Number Reducer	Hexagon Reducer (mm)	Model Number Reducer	Hexagon Reducer (mm)	Model Number Reducer
W2000X (2766 Nm)	30	31,0	54	W2103X	2,1	–	–	–	–	–	–
	32	31,0	54	W2104X	2,1	–	–	–	–	–	–
	36	31,0	54	W2107X	2,1	–	–	–	–	–	–
	38	33,5	58	W2108X	2,2	–	–	–	–	–	–
	41	33,5	58	W2110X	2,2	41 - 32	W2110R104	41 - 30	W2110R103	41 - 24	W2110R024M
	46	33,5	61	W2113X	2,2	46 - 36	W2113R107	46 - 32	W2113R104	–	–
	50	39,0	63	W2200X	2,2	50 - 41	W2200R110	50 - 36	W2200R107		–
	55	41,8	69	W2203X	2,3	55 - 46	W2203R113	55 - 41	W2203R110	55 - 36	W2203R107
	60	44,5	65	W2206X	2,2	60 - 50	W2206R200	60 - 46	W2206R113	60 - 41	W2206R110
	–	–	–	–	–	60 - 36	W2206R107	–	–	–	–
W4000X (5661 Nm)	36	37,0	61	W4107X	3,7	–	–	–	–	–	–
	41	37,0	61	W4110X	3,7	–	–	–	–	–	–
	46	39,5	64	W4113X	3,8	–	–	–	–	–	–
	50	41,5	67	W4200X	3,9	50 - 36	W4200R107	–	–	–	–
	55	44,0	73	W4203X	4,0	55 - 41	W4203R110	55 - 36	W4203R107	55 - 32	W4203R104
	60	46,5	71	W4206X	4,1	60 - 50	W4206R200	60 - 46	W4206R113	60 - 36	W4206R107
	65	49,5	76	W4209X	4,1	65 - 55	W4209R203	65 - 50	W4209R200	65 - 46	W4209R113
	70	52,5	78	W4212X	4,2	70 - 60	W4212R206	70 - 55	W4212R203	–	–
	75	55,3	82	W4215X	4,3	75 - 65	W4215R209	75 - 60	W4215R206	–	–
	–	–	–	W4215X		75 - 55	W4215R203	75 - 50	W4215R200	–	–
	80	58,5	84	W4302X	–	–	–	80 - 70	W4302R212	80 - 65	W4302R209
	–	–	–	W4302X	–	80 - 55	W4302R203	80 - 50	W4302R200	–	–
	85	62,0	86	W4085MX	4,5	–	–	–	–	–	–
W8000X (11.484 Nm)	50	45,0	78	W8200X	8,1	–	–	–	–	–	–
	55	48,0	80	W8203X	8,1	–	–	–	–	–	–
	60	51,0	83	W8206X	8,1	–	–	–	–	–	–
	65	52,5	85	W8209X	8,1	65 - 50	W8209R200	–	–	–	–
	70	56,0	85	W8212X	7,9	70 - 55	W8212R203	–	–	–	–
	75	58,0	85	W8215X	7,9	75 - 60	W8215R206	75 - 55	W8215R203	–	–
	80	60,5	90	W8302X	8	80 - 65	W8302R209	80 - 60	W8302R206	80 - 55	W8302R203
	–	–	–	–	–	80 - 50	W8302R200	–	–	–	–
	85	66,0	92	W8085MX	8,2	85 - 70	W8085R070M	85 - 65	W8085R065M	85 - 60	W8085R060M
	–	–	–	–	–	85 - 55	W8085R055M	–	–	–	–
	90	74,0	103	W8090MX	8,8	90 - 75	W8090R075M	–	–	–	–
	95	74,0	103	W8312X	8,8	95 - 80	W8312R302	95 - 75	W8312R215	–	–
	100	79,5	110	W8315X	9,3	–	–	–	–	–	–
	105	79,5	110	W8402X	9,3	–	–	–	–	–	–

[1] See page 407 for table of hexagon sizes of bolts, nuts and related thread diameters.

W-Series, Metric Cassettes and Reducers

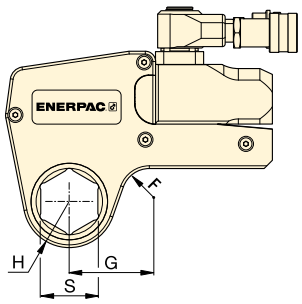

Hexagon Range:
50 - 155 mm

Maximum Operating Pressure:
690 bar

W
Series
X-Edition



▼ **SELECTION CHART**

Drive Unit Model Number	Hexagon Size [1] S (mm)	Nose Radius H (mm)	Dim. G (mm)	Model Nr. Cassette	(kg)	Hexagon Reducer (mm)	Model Number Reducer	Hexagon Reducer (mm)	Model Number Reducer
W15000X (20.785 Nm)	65	59,0	89	W15209X	13,6	–	–	–	–
	70	59,0	89	W15212X	13,6	–	–	–	–
	75	62,0	91	W15215X	13,7	–	–	–	–
	80	64,5	93	W15302X	13,8	80 - 65	W15302R209	–	–
	85	69,5	97	W15085MX	14,1	85 - 70	W15085R070M	–	–
	90	75,0	102	W15090MX	14,5	90 - 75	W15090R075M	–	–
	95	75,0	102	W15312X	14,6	95 - 80	W15312R302	95 - 75	W15312R215
	100	80,5	103	W15315X	14,8	–	–	–	–
	105	80,5	103	W15402X	14,8	105 - 90	W15402R090M	–	–
	110	87,5	115	W15405X	15,1	110 - 95	W15110R095M	–	–
	115	87,5	115	W15115MX	15,1	115 - 100	W15115R100M	–	–
W22000X (30.506 Nm)	75	67,0	102	W22215X	22,0	–	–	–	–
	80	67,0	102	W22302X	21,6	80-60	W22302R206	80 - 55	W22302R203
	85	73,0	107	W22085MX	22,5	85-65	W22085MR209	85 - 60	W22085MR206
	90	77,9	113	W22090MX	23,4	90-70	W22090MR212	90 - 60	W22090MR206
	95	77,9	113	W22312X	22,9	95-75	W22312R215	–	–
	100	85,1	120	W22315X	24,3	–	–	–	–
	105	85,1	120	W22402X	23,4	–	–	–	–
	110	89,9	125	W22405X	24,6	–	–	–	–
	115	89,9	125	W22115MX	24,0	–	–	–	–
	120	95,0	130	W22412X	24,7	–	–	–	–
	123	95,0	130	W22123MX	24,4	–	–	–	–
	130	100,0	135	W22502X	25,0	–	–	–	–
	135	100,0	135	W22506X	23,9	135 - 105	W22506R402	–	–
W35000X (47.454 Nm)	80	76,0	129	W35302X	32,8	80 - 50	W35302R200	–	–
	85	76,0	129	W35085MX	32,3	–	–	–	–
	90	81,5	135	W35090MX	33,5	90 - 60	W35090R206	–	–
	95	81,5	135	W35312X	32,9	–	–	–	–
	100	87,0	139	W35315X	34,1		–	–	–
	105	87,0	139	W35402X	33,5	–	–	–	–
	110	93,0	146	W35405X	34,9	110 - 85	W35405R085M	–	–
	115	93,0	146	W35115MX	34,2	–	–	–	–
	120	100,0	153	W35412X	35,6	120 - 95	W354121R312	–	–
	123	100,0	153	W35123MX	35,0	–	–	–	–
	130	103,0	160	W35502X	35,8	130 - 105	W35502R402	–	–
	135	103,0	160	W35506X	34,6	135 - 110	W35506R405	–	–
	140	110,0	163	W35508X	36,2	140 - 115	W35508R115M	–	–
	145	110,0	163	W35512X	34,9	145 - 120	W35512R412	–	–
	150	114,0	164	W35514X	36,7	–	–	–	–
	151	114,0	164	W35151MX	36,5	–	–	–	–
	155	114,0	164	W35602X	35,3	155 - 130	W35602R502	–	–

[1] See page 407 for table of hexagon sizes of bolts, nuts and related thread diameters.

W-SL, Series, UltraSlim Bi-Hexagonal Cassettes ENERPAC

▼ W4206SL ultraslim bi-hexagonal stepped width cassette with W4000X drive unit



Your easy and long lasting solution to difficult access bolting applications



UltraSlim: Designed for Tight Spots

Stepped width design provides easy access in confined areas. UltraSlim cassettes fit where standard solutions won't.



Built to Outperform

High endurance components keep working when others fail.



Top Mounted Straight Handle

The top mounted straight handle is standard and provides safe and easy positioning and access to hard to reach fasteners.

Straight handle (standard)	**SWH6S**
Angled handle (optional)	**SWH6A**



CE - ATEX declared

All W-Series X-edition drive units are CE - ATEX declared. All W-Series X-edition hexagon cassettes are CE - ATEX declared and are shipped complete with a calibration certificate.

CE II 2 GD T4

Versatility

- **Lean, stepped width design allows tool to be mounted over bolts where other tools won't fit**
- **Bi-Hexagonal cassette allows twice as many positioning points on nut or bolt**
- **Robust top mounted handle stays out of the way, providing safe fastening in hard to reach areas**
- **Uses same drive unit as standard W-series hexagon cassettes.**

Performance

- **Premium components provide best-in-class endurance compared to other limited access tools.**

Ease of Use

- **Few moving parts are easily accessible for quick field maintenance**
- **Fast release drive unit enables rapid exchange of cassettes, no tools required**
- **Top mounted straight handle for improved tool handling and safety.**

Accuracy

- **Constant torque output provides accuracy of ± 3% across the full stroke**
- **Calibration certificate shipped with every cassette.**



Slim enough to fit and tough enough to last. This UltraSlim wrench is the perfect controlled bolting solution for this oil and gas flange. ▶

UltraSlim Bi-Hexagonal Cassettes

UltraSlim Cassettes

Accessing narrow spaces normally requires significantly reducing the width of the torque wrench. For the tool operator, this has always meant vastly reduced tool durability, and/or reduced torque output.

By using the highest grade materials, perfecting the geometry, and placing the positioning handle on top of the tool for safe fastening, Enerpac UltraSlim cassettes are able to provide greater torque, get into tighter spaces, and vastly outperform the competition in product durability *.

Durability of Key Components *

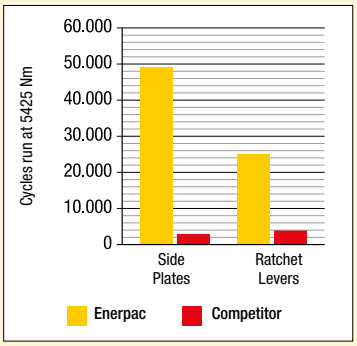

** Average test results, whereby three Enerpac 46 mm UltraSlim cassettes and three competitor 46 mm cassettes were tested at 5425 Nm for 50.000 cycles. The Enerpac side plates never broke for the full duration of the test.*

W-SL Series UltraSlim



Nominal Torque Output:
5911 Nm

Bi-Hexagonal Range:
46 - 75 mm / 1 13/16 - 2 15/16"

Maximum Operating Pressure:
690 bar



Torque Pump Selection Matrix

System matched air and electric torque pumps that are ideal for use with hydraulic wrenches.

Page: 265



Torque Wrench Hoses

Use Enerpac THQ-700 Series hoses with W-Series torque wrenches to ensure the integrity of your hydraulic system.

2 meters long, 2 hoses	**THQ702T**
6 meters long, 2 hoses	**THQ706T**
12 meters long, 2 hoses	**THQ712T**

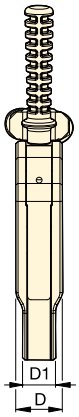

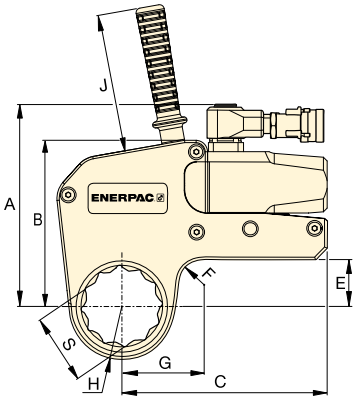

▼ SELECTION CHART

Hexagonal Size S (mm)	Hexagonal Size S (inch)	Nominal Torque @ 690 bar (Nm)	UltraSlim Cassette * Model Nr.	Minimum Torque @ 69 bar (Nm)	Nose Radius H (mm)	Dimensions (mm) G	A	B	C	D	D1	E	F	J	(kg)	Drive Unit Model Nr. ** (sold separately)
46	**1 13/16**	2685	**W2113SL**	269	36,5	59,6	140,7	109,3	147,7	32,4	25,4	24,0	20,0	120	2,2	**W2000X**
50	**2**	2685	**W2200SL**	269	38,8	61,1									2,2	
55	**2 3/16**	2685	**W2203SL**	269	41,5	63,2									2,2	
60	**2 3/8**	2685	**W2206SL**	269	44,5	65,1									2,2	
46	**1 13/16**	5911	**W4113SL**	591	39,5	67,2	175,6	144,5	178,5	40,5	28,6	40,8	20,0	120	4,6	**W4000X**
55	**2 3/16**	5911	**W4203SL**	591	44,0	68,7									4,6	
60	**2 3/8**	5911	**W4206SL**	591	48,0	71,6									4,7	
65	**2 9/16**	5911	**W4209SL**	591	50,5	74,1									4,7	
70	**2 3/4**	5911	**W4212SL**	591	53,5	75,6									4,7	
75	**2 15/16**	5911	**W4215SL**	591	56,0	76,0									4,7	

* Bi-Hexagonal Cassette includes top mounted straight handle.

** Cassette may also be used with W2000PX and W4000PX drive units, featuring double-swivel manifolds. Weight of drive units: W2000X = 1,4 kg; W4000X = 2,0 kg.

Accessories for W-Series, X-Edition Wrenches

ENERPAC

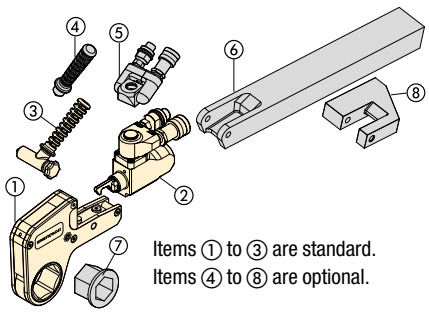

① Hexagon Cassette
② Drive Unit
③ Angled Positioning Handle
④ Straight Positioning Handle
⑤ Pro Series Swivel
⑥ Extended Reaction Arm
⑦ Reducer Insert
⑧ Reaction Paddle

TSP
WTE
WRP
Series



TSP-Series, Pro Series Swivel

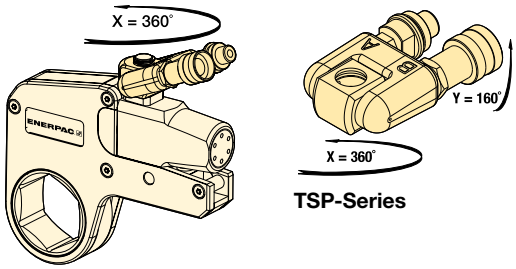

- **Robust interlocking design**
- **360° X-axis and 160° Y-axis rotation**
- **Increases tool fit in restricted access areas**
- **Simplifies hose placement**
- **Includes male and female couplers.**

For Torque Wrench Model Number	Model Number [1]	Maximum Pressure (bar)	(kg)
W2000X, W4000X, W8000X, W15000X, W22000X, W35000X	**TSP300**	690	0,2

[1] To order a W-Series (X-edition) drive unit fitted with a TSP300 tilt and swivel manifold, insert a "P"prior to the "X" in the tool model number, example: **W2000PX**.
TSP300 is designed for X-Edition tools only, and is not compatible with standard edition tools.
For replacement components for existing tools, refer to repair sheet on www.enerpac.com

WTE-Series, Extended Reaction Arm

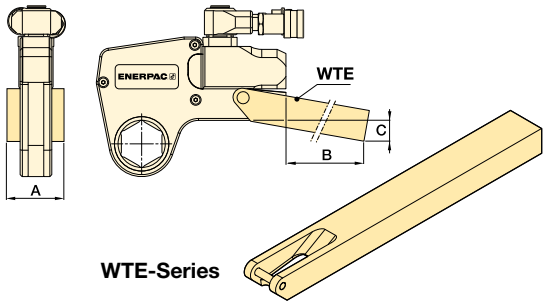

- **Full torque rated**
- **Increases tool fit in restricted access areas.**

For Torque Wrench Model Number	Model Number	Dimensions (mm) A	B	C	(kg) *
W2000X	**WTE20**	56	398	76	2,6
W4000X	**WTE40**	66	436	74	4,6
W8000X	**WTE80**	85	449	55	7,6
W15000X	**WTE150**	102	498	72	12,0
W22000X	**WTE220**	114	524	77	17,3
W35000X	**WTE350**	127	419	133	17,8

* Weights indicated are for the accessories only and do not include the wrench.

WRP-Series, Low Profile Reaction Paddles

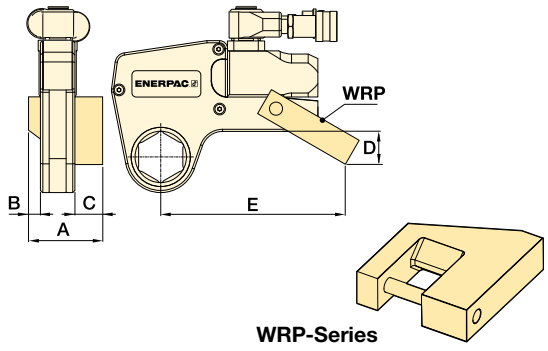

- **Lightweight interchangeable design**
- **Allows for offset reaction when in-line reaction is not available.**

For Torque Wrench Model Nr.	Model Number	Dimensions (mm) A	B	C	D	E	(kg) *
W2000X	**WRP20**	84	16	35	45	148	0,4
W4000X	**WRP40**	109	21	47	59	190	0,8
W8000X	**WRP80**	137	26	57	69	223	2,0
W15000X	**WRP150**	165	32	69	87	257	3,9
W22000X	**WRP220**	207	37	91	134	317	7,2
W35000X	**WRP350**	225	42	91	182	367	10,6

* Weights indicated are for the accessories only and do not include the wrench.

Custom Torque Wrenches and Bolt Tensioners

Looking for customized components to help solve your torquing problems? Enerpac has the experience and capabilities to help find solutions to your problems.

Enerpac hydraulic torque wrenches are designed to accommodate most bolting applications. However, due to space constraints, location of reaction points or need for special sockets and adapters, there is often a need for customized components.



◀ *Custom S6000X hydraulic torque wrench fitted with a custom reaction arm/socket.*



◀ *Enerpac Multi Stud Tensioning (MST) system capable of tensioning every single stud in a joint simultaneously.*



◀ *Custom hydraulic tensioners to suit 5 inch studs load output 4200 kN.*

Overview Custom Torque Wrenches and Bolt Tensioners



▲ *Custom S11000X torque wrench with a custom torque link and reaction roller.*

Customizable features on torque wrenches:

- Reaction Arms
- Torque Links (split or layered for extremely space restricted applications)
- Reaction Roller Assemblies
- Sockets (direct drive, castellated, peg-drive, stacked)
- Drives (direct Allen, spline, square drive size)
- Hexagon Reducing and Square Drive Inserts.

Customizable features on bolt tensioners:

- Adaptor kits with puller sleeves to suit different thread and/or pitch sizes
- Nut rotating sockets to accommodate different nut A/F (across flats) sizes
- Bridges to suit round or non-standard nuts or clear obstructions
- Sockets (direct drive, castellated, peg-drive, stacked)
- Load cells with various capacities
- Screw-on tensioners to overcome space restrictions.

RSL, Low-Profile Hexagon Torque Wrenches

ENERPAC

▼ RSL-Drive Units with interchangeable RLP-Hexagon Cassette and RSQ-Square Drive Cassette



Setting New Standards in Safety, Simplicity and Performance

Safety and Performance

- Innovative design that completely encloses all moving parts and minimizes pinch points
- 30-35° rotation angle provides added productivity while avoiding "tool lock on" which is common with some torque wrench designs.

Simplicity

- Simple robust alloy steel design with just three moving parts for reduced maintenance
- Robust handles are available for both sides and the tops of cassettes to allow for extra maneuverability
- Designed to give optimum strength to weight and torque to weight ratios
- Minimum nose radius for trouble-free tool fit.

Versatility

- Interchangeable cassette design
- Wide range of hexagon sizes available for all applications
- Reaction arm has a simple dial lock for rapid change
- For use in multiple industrial, energy, and oil and gas applications.

Accuracy

- Constant torque output provides accuracy of ± 3% across the full stroke.



RLP-Low Profile Hexagon Cassettes

For the metric and imperial sizes of hexagon cassettes see **pages 236 - 243**.



RSQ-Square Drive Cassettes

RSQ-Square Drive Cassettes are interchangeable with the RLP-Hexagon Cassettes. They all use the same RSL-drive unit.

Page: 244



Back-Up Spanners, BUS-Series

To be used to stop the back nut from turning during make up or break out. Two hexagon sizes in one tool.

Page: 217



Torque Pumps

Visit enerpac.com for system matched air and electric torque pumps that are ideal for use with hydraulic torque wrenches.

Page: 265



Torque Wrench Hoses

Use Enerpac THQ700-Series torque wrench hoses with RSL-Series torque wrenches to ensure the integrity of your hydraulic system.

2 meters long, 2 hoses	**THQ702T**
6 meters long, 2 hoses	**THQ706T**
12 meters long, 2 hoses	**THQ712T**

Drive Units for Hexagon & Square Drive Cassettes

One Drive, Two Tools

One RSL-Hydraulic Drive Unit fits RLP-Hexagon Cassette or RSQ-Square Drive Cassette.

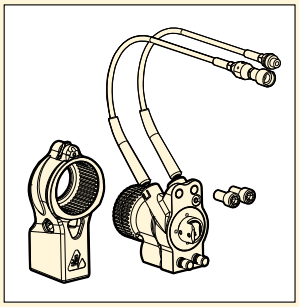

RSL

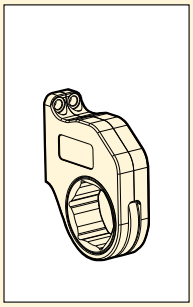

RLP... / RLP...SL

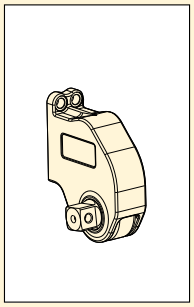

RSQ

RSL Series



Maximum Torque at 690 bar:
1909 - 37.965 Nm

Hexagon Range:
⅞ - 6⅛ inch

Hexagon Range:
27 - 155 mm

Maximum Operating Pressure:
690 bar

▼ TORQUE WRENCH OPTIONS AND ACCESSORIES

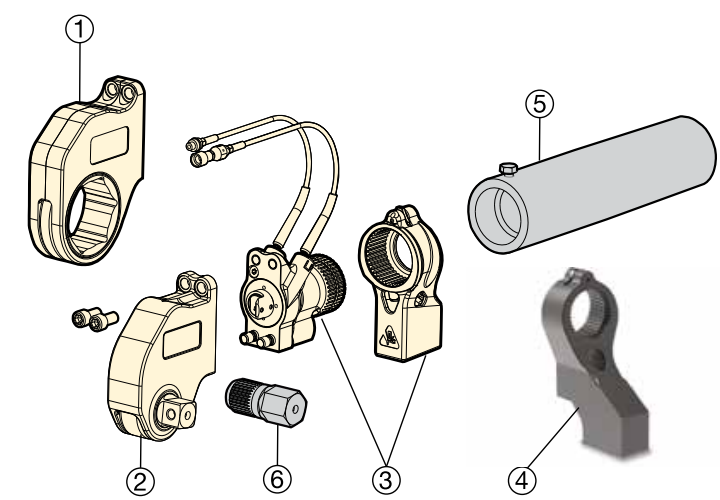

① **RLP**-Hexagon Cassette (pages 236-240)
RLP-SL-Slimline Hexagon Cassette (pages 242-243)
② **RSQ**-Square Drive Cassette (pages 244-245)
③ **RSL**-Drive Unit and Reaction Arm (page 235)

Optional Parts (page 241)
④ **ERA**-Extended Reaction Arm, for RSQ only
⑤ **ERT**-Extended Reaction Tube, for RLP only

Optional Parts (only available per request)
⑥ Hexagon Bit

▼ SELECTION CHART

Hexagon Cassette Range (A/F) (see pages 236 - 243 for sizes and model numbers)		Maximum Torque Output at 690 bar		Drive Unit Model Number	Minimum Torque Output at 69 bar		
(inch)	(mm)	(Ft.lbs)	(Nm)		(Ft.lbs)	(Nm)	(kg)
⅞ - 2⅜	27 - 60	1408	1909	**RSL1500**	141	191	1,6
1 5⁄16 - 2 15⁄16	33 - 75	3080	4176	**RSL3000**	308	417	2,6
1 11⁄16 - 3⅛	46 - 80	5303	7190	**RSL5000**	530	719	4,1
2⅜ - 3⅛	60 - 80	7862	10.659	**RSL8000**	786	1066	4,9
2 7⁄16 - 4⅝	62 - 110	11.154	15.123	**RSL11000**	1115	1512	5,3
2 15⁄16 - 4⅝	75 - 115	18.843	25.547	**RSL19000**	1884	2554	9,1
3⅛ - 6⅛	80 - 155	28.002	37.965	**RSL28000**	2800	3796	10,0

Select the Right Torque: Use Enerpac Bolting Integrity Software Solutions

Comprehensive on-line software solutions for Bolted Joint Integrity.

The software offers Tool selection, Bolt Load calculations and Tool pressure settings, as well as, a combined Application Data Sheet and Joint Completion Report. Custom Joint information can also be entered.

Page: 408

Tel: +45 63 12 83 00 | Email: ps@hymatik.com | www.hymatik.com | Hvidkaervej 27a, DK-5250 Odense SV, Denmark

Hexagon Cassettes for RSL-Series

ENERPAC

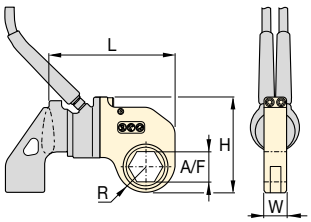

Hexagon Range:
⅞ - 6⅛ inch

Hexagon Range:
27 - 155 mm

Maximum Operating Pressure:
690 bar

RSL Series



▼ **SELECTION CHART**

Drive Unit Model Number	Hexagon Size A/F		Hexagon Cassette Model Number	Maximum Torque		Dimensions (inch)					Dimensions (mm)				
	(inch)	(mm)		(Ft.lbs)	(Nm)	R	L	W	H	(lbs)	R	L	W	H	(kg)
RSL1500	⅞	–	RLP1014	320	434	0.79	6.00	1.25	4.33	2.2	20,1	152,4	31,8	110,0	1,0
	1 1/16	27	RLP1101	640	868	0.95	6.05	1.25	4.50	2.2	24,1	153,7	31,8	114,3	1,0
	1⅛	–	RLP1102	640	868	1.03	6.12	1.25	4.57	2.3	26,2	155,4	31,8	116,1	1,0
	1 3/16	30	RLP1103	640	868	1.03	6.12	1.25	4.57	2.3	26,2	155,4	31,8	116,1	1,0
	1¼	32	RLP1104	640	868	1.03	6.12	1.25	4.57	2.3	26,2	155,4	31,8	116,1	1,0
	1 5/16	33	RLP1105	900	1220	1.15	6.24	1.25	4.69	2.4	29,2	158,5	31,8	119,1	1,1
	1⅜	35	RLP1106	900	1220	1.15	6.24	1.25	4.69	2.4	29,2	158,5	31,8	119,1	1,1
	1 7/16	36	RLP1107	900	1220	1.15	6.24	1.25	4.69	2.4	29,2	158,5	31,8	119,1	1,1
	1½	38	RLP1108	1408	1909	1.31	6.41	1.25	4.86	2.7	33,3	162,8	31,8	123,4	1,2
	1 9/16	–	RLP1109	1408	1909	1.31	6.41	1.25	4.86	2.7	33,3	162,8	31,8	123,4	1,2
	1⅝	41	RLP1110	1408	1909	1.31	6.41	1.25	4.86	2.7	33,3	162,8	31,8	123,4	1,2
	1 11/16	–	RLP1111	1408	1909	1.40	6.49	1.25	4.94	2.7	35,6	164,8	31,8	125,5	1,2
	1¾	–	RLP1112	1408	1909	1.40	6.49	1.25	4.94	2.7	35,6	164,8	31,8	125,5	1,2
	1 13/16	46	RLP1113	1408	1909	1.40	6.49	1.25	4.94	2.7	35,6	164,8	31,8	125,5	1,2
	1⅞	–	RLP1114	1408	1909	1.48	6.58	1.25	5.03	2.7	37,6	167,1	31,8	127,8	1,2
	1 15/16	–	RLP1115	1408	1909	1.48	6.58	1.25	5.03	2.7	37,6	167,1	31,8	127,8	1,2
	2	50	RLP1200	1408	1909	1.48	6.58	1.25	5.03	2.7	37,6	167,1	31,8	127,8	1,2
	2 1/16	–	RLP1201	1408	1909	1.58	6.68	1.25	5.13	2.7	40,1	169,7	31,8	130,3	1,2
	2⅛		RLP1202	1408	1909	1.58	6.68	1.25	5.13	2.7	40,1	169,7	31,8	130,3	1,2
	2 3/16	55	RLP1203	1408	1909	1.58	6.68	1.25	5.13	2.7	40,1	169,7	31,8	130,3	1,2
	2¼	–	RLP1204	1408	1909	1.70	6.79	1.25	5.24	2.8	43,2	172,5	31,8	133,1	1,3
	2 5/16	–	RLP1205	1408	1909	1.70	6.79	1.25	5.24	2.8	43,2	172,5	31,8	133,1	1,3
	2⅜	60	RLP1206	1408	1909	1.70	6.79	1.25	5.24	2.8	43,2	172,5	31,8	133,1	1,3
RSL3000	1 5/16	33	RLP3105	900	1220	1.18	7.62	1.38	5.49	3.5	30,0	193,5	35,1	139,4	1,6
	1⅜	35	RLP3106	900	1220	1.18	7.62	1.38	5.49	3.5	30,0	193,5	35,1	139,4	1,6
	1 7/16	36	RLP3107	900	1220	1.18	7.62	1.38	5.49	3.5	30,0	193,5	35,1	139,4	1,6
	1½	38	RLP3108	1200	1627	1.32	7.77	1.38	5.63	3.9	33,5	197,4	35,1	143,0	1,8
	1 9/16	–	RLP3109	1200	1627	1.32	7.77	1.38	5.63	3.9	33,5	197,4	35,1	143,0	1,8
	1⅝	41	RLP3110	1200	1627	1.32	7.77	1.38	5.63	3.9	33,5	197,4	35,1	143,0	1,8
	1 11/16	–	RLP3111	1900	2576	1.47	7.87	1.38	5.78	4.0	37,3	199,9	35,1	146,8	1,8
	1¾	–	RLP3112	1900	2576	1.47	7.87	1.38	5.78	4.0	37,3	199,9	35,1	146,8	1,8
	1 13/16	46	RLP3113	1900	2576	1.47	7.87	1.38	5.78	4.0	37,3	199,9	35,1	146,8	1,8
	1⅞	–	RLP3114	2600	3526	1.60	8.04	1.38	5.92	4.5	40,6	204,2	35,1	150,4	2,0
	1 15/16	–	RLP3115	2600	3526	1.60	8.04	1.38	5.92	4.5	40,6	204,2	35,1	150,4	2,0
	2	50	RLP3200	2600	3526	1.60	8.04	1.38	5.92	4.5	40,6	204,2	35,1	150,4	2,0
	2 1/16	–	RLP3201	3080	4176	1.76	8.16	1.38	6.08	4.7	44,7	207,3	35,1	154,4	2,1
	2⅛	–	RLP3202	3080	4176	1.76	8.16	1.38	6.08	4.7	44,7	207,3	35,1	154,4	2,1
	2 3/16	55	RLP3203	3080	4176	1.76	8.16	1.38	6.08	4.7	44,7	207,3	35,1	154,4	2,1
	2¼	–	RLP3204	3080	4176	1.84	8.25	1.38	6.15	4.8	46,7	209,6	35,1	156,2	2,2
	2 5/16	–	RLP3205	3080	4176	1.84	8.25	1.38	6.15	4.8	46,7	209,6	35,1	156,2	2,2
	2⅜	60	RLP3206	3080	4176	1.84	8.25	1.38	6.15	4.8	46,7	209,6	35,1	156,2	2,2
	2 7/16	62	RLP3207	3080	4176	1.95	8.14	1.38	6.26	4.6	49,5	206,8	35,1	159,0	2,1
	2½	63	RLP3208	3080	4176	1.95	8.14	1.38	6.26	4.6	49,5	206,8	35,1	159,0	2,1
	2 9/16	65	RLP3209	3080	4176	1.95	8.14	1.38	6.26	4.6	49,5	206,8	35,1	159,0	2,1
	2⅝	–	RLP3210	3080	4176	2.04	8.23	1.38	6.36	4.4	51,8	209,0	35,1	161,5	2,0
	2 11/16	–	RLP3211	3080	4176	2.04	8.23	1.38	6.36	4.4	51,8	209,0	35,1	161,5	2,0
	2¾	70	RLP3212	3080	4176	2.04	8.23	1.38	6.36	4.4	51,8	209,0	35,1	161,5	2,0
	2 13/16	–	RLP3213	3080	4176	2.16	8.34	1.38	6.54	4.7	54,9	211,8	35,1	166,1	2,1
	2⅞	–	RLP3214	3080	4176	2.16	8.34	1.38	6.54	4.7	54,9	211,8	35,1	166,1	2,1
	2 15/16	75	RLP3215	3080	4176	2.16	8.34	1.38	6.54	4.7	54,9	211,8	35,1	166,1	2,1

IMPORTANT: RSL-drive units must be ordered separately to operate the RLP-Hexagon Cassettes.

Hexagon Cassettes for RSL-Series

Hexagon Range:
⅞ - 6⅛ inch

Hexagon Range:
27 - 155 mm

Maximum Operating Pressure:
690 bar

RSL Series



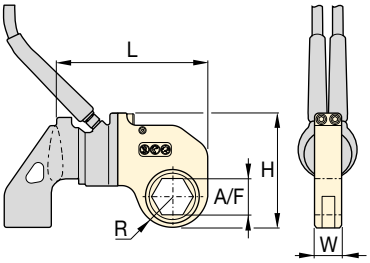



Slimline Stepped-Width Hexagon Cassettes

For accessing narrow spaces **RLP...SL** Stepped-Width Hexagon Cassettes are available. Slimline cassettes use same drive unit as standard RLP-cassettes.

Page: 243

▼ **SELECTION CHART**

Drive Unit Model Number	Hexagon Size A/F (inch)	Hexagon Size A/F (mm)	Hexagon Cassette Model Number	Maximum Torque (Ft.lbs)	Maximum Torque (Nm)	Dimensions (inch) R	L	W	H	(lbs)	Dimensions (mm) R	L	W	H	(kg)
RSL5000	1 11/16	–	RLP5111	2600	3526	1.61	9.08	1.75	6.52	6.6	40,9	230,6	44,5	165,6	3,0
	1¾	–	RLP5112	2600	3526	1.61	9.08	1.75	6.52	6.6	40,9	230,6	44,5	165,6	3,0
	1 13/16	46	RLP5113	2600	3526	1.61	9.08	1.75	6.52	6.6	40,9	230,6	44,5	165,6	3,0
	1⅞	–	RLP5114	2600	3526	1.61	9.08	1.75	6.52	6.6	40,9	230,6	44,5	165,6	3,0
	1 15/16	–	RLP5115	2600	3526	1.61	9.08	1.75	6.52	6.6	40,9	230,6	44,5	165,6	3,0
	2	50	RLP5200	2600	3526	1.61	9.08	1.75	6.52	6.6	40,9	230,6	44,5	165,6	3,0
	2 1/16	–	RLP5201	3500	4746	1.71	9.18	1.75	6.62	6.5	43,4	233,2	44,5	168,1	2,9
	2⅛	–	RLP5202	3500	4746	1.71	9.18	1.75	6.62	6.5	43,4	233,2	44,5	168,1	2,9
	2 3/16	55	RLP5203	3500	4746	1.71	9.18	1.75	6.62	6.5	43,4	233,2	44,5	168,1	2,9
	2¼	–	RLP5204	4500	6102	1.87	9.34	1.75	6.78	7.0	47,5	237,2	44,5	172,2	3,2
	2 5/16	–	RLP5205	4500	6102	1.87	9.34	1.75	6.78	7.0	47,5	237,2	44,5	172,2	3,2
	2⅜	60	RLP5206	4500	6102	1.87	9.34	1.75	6.78	7.0	47,5	237,2	44,5	172,2	3,2
	2 7/16	62	RLP5207	5303	7191	2.01	9.48	1.75	6.92	7.0	51,1	240,8	44,5	175,8	3,2
	2½	63	RLP5208	5303	7191	2.01	9.48	1.75	6.92	7.0	51,1	240,8	44,5	175,8	3,2
	2 9/16	65	RLP5209	5303	7191	2.01	9.48	1.75	6.92	7.0	51,1	240,8	44,5	175,8	3,2
	2⅝	–	RLP5210	5303	7191	2.16	9.63	1.75	7.07	7.5	54,9	244,6	44,5	179,6	3,4
	2 11/16	–	RLP5211	5303	7191	2.16	9.63	1.75	7.07	7.5	54,9	244,6	44,5	179,6	3,4
	2¾	70	RLP5212	5303	7191	2.16	9.63	1.75	7.07	7.5	54,9	244,6	44,5	179,6	3,4
	2 13/16	–	RLP5213	5303	7191	2.24	9.71	1.75	7.15	7.5	56,9	246,6	44,5	181,6	3,4
	2⅞	–	RLP5214	5303	7191	2.24	9.71	1.75	7.15	7.5	56,9	246,6	44,5	181,6	3,4
	2 15/16	75	RLP5215	5303	7191	2.24	9.71	1.75	7.15	7.5	56,9	246,6	44,5	181,6	3,4
	3	–	RLP5300	5303	7191	2.26	9.73	1.75	7.17	7.2	57,4	247,1	44,5	182,1	3,3
	3 1/16	–	RLP5301	5303	7191	2.26	9.73	1.75	7.17	7.2	57,4	247,1	44,5	182,1	3,3
	3⅛	80	RLP5302	5303	7191	2.26	9.73	1.75	7.17	7.2	57,4	247,1	44,5	182,1	3,3
RSL8000	2⅜	60	RLP8206	4500	6102	1.87	9.53	2.25	7.00	8.9	47,5	242,1	57,2	177,8	4,0
	2 7/16	62	RLP8207	5800	7865	2.01	9.67	2.25	7.13	9.0	51,1	245,6	57,2	181,1	4,1
	2½	63	RLP8208	5800	7865	2.01	9.67	2.25	7.13	9.0	51,1	245,6	57,2	181,1	4,1
	2 9/16	65	RLP8209	5800	7865	2.01	9.67	2.25	7.13	9.0	51,1	245,6	57,2	181,1	4,1
	2⅝	–	RLP8210	7862	10.661	2.16	9.82	2.25	7.28	9.6	54,9	249,4	57,2	184,9	4,4
	2 11/16	–	RLP8211	7862	10.661	2.16	9.82	2.25	7.28	9.6	54,9	249,4	57,2	184,9	4,4
	2¾	70	RLP8212	7862	10.661	2.16	9.82	2.25	7.28	9.6	54,9	249,4	57,2	184,9	4,4
	2 13/16	–	RLP8213	7862	10.661	2.24	9.90	2.25	7.38	9.6	56,9	251,5	57,2	187,5	4,4
	2⅞	–	RLP8214	7862	10.661	2.24	9.90	2.25	7.38	9.6	56,9	251,5	57,2	187,5	4,4
	2 15/16	75	RLP8215	7862	10.661	2.24	9.90	2.25	7.38	9.6	56,9	251,5	57,2	187,5	4,4
	3	–	RLP8300	7862	10.661	2.26	9.92	2.25	7.39	9.3	57,4	252,0	57,2	187,7	4,2
	3 1/16	–	RLP8301	7862	10.661	2.26	9.92	2.25	7.39	9.3	57,4	252,0	57,2	187,7	4,2
	3⅛	80	RLP8302	7862	10.661	2.26	9.92	2.25	7.39	9.3	57,4	252,0	57,2	187,7	4,2

IMPORTANT: RSL-drive units must be ordered separately to operate the RLP-Hexagon Cassettes.

Hexagon Cassettes for RSL-Series

ENERPAC

Hexagon Range:
⅞ - 6⅛ inch

Hexagon Range:
27 - 155 mm

Maximum Operating Pressure:
690 bar

RSL
Series



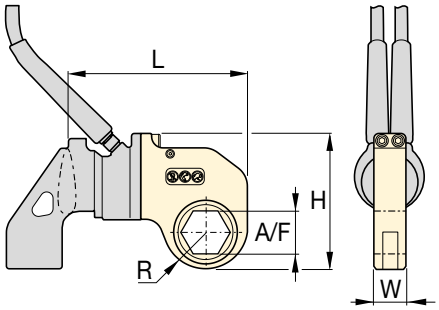

▼ **SELECTION CHART**

Drive Unit Model Number	Hexagon Size A/F		Hexagon Cassette Model Number	Maximum Torque		Dimensions (inch)					Dimensions (mm)				
	(inch)	(mm)		(Ft.lbs)	(Nm)	R	L	W	H	(lbs)	R	L	W	H	(kg)
RSL11000	2 7/16	62	RLP11207	5800	7865	1.98	10.00	2.50	8.03	14.2	50,3	254,0	63,5	204,0	6,4
	2 1/2	–	RLP11208	5800	7865	1.98	10.00	2.50	8.03	14.2	50,3	254,0	63,5	204,0	6,4
	2 9/16	65	RLP11209	5800	7865	1.98	10.00	2.50	8.03	14.2	50,3	254,0	63,5	204,0	6,4
	2 5/8	–	RLP11210	7300	9899	2.19	11.20	2.50	8.23	14.8	55,6	284,5	63,5	209,0	6,7
	2 11/16	–	RLP11211	7300	9899	2.19	11.20	2.50	8.23	14.8	55,6	284,5	63,5	209,0	6,7
	2 3/4	70	RLP11212	7300	9899	2.19	11.20	2.50	8.23	14.8	55,6	284,5	63,5	209,0	6,7
	2 13/16		RLP11213	9000	12.204	2.29	11.31	2.50	8.34	14.8	58,2	287,3	63,5	211,8	6,7
	2 7/8	–	RLP11214	9000	12.204	2.29	11.31	2.50	8.34	14.8	58,2	287,3	63,5	211,8	6,7
	2 15/16	75	RLP11215	9000	12.204	2.29	11.31	2.50	8.34	14.8	58,2	287,3	63,5	211,8	6,7
	3	–	RLP11300	11.154	15.125	2.43	11.44	2.50	8.47	15.2	61,7	290,6	63,5	215,1	6,9
	3 1/16	–	RLP11301	11.154	15.125	2.43	11.44	2.50	8.47	15.2	61,7	290,6	63,5	215,1	6,9
	3 1/8	80	RLP11302	11.154	15.125	2.43	11.44	2.50	8.47	15.2	61,7	290,6	63,5	215,1	6,9
	3 3/16	–	RLP11303	11.154	15.125	2.60	11.71	2.50	8.64	16.6	66,0	297,4	63,5	219,5	7,5
	–	85	RLP11085M	11.154	15.125	2.60	11.71	2.50	8.64	16.6	66,0	297,4	63,5	219,5	7,5
	3 1/4	–	RLP11304	11.154	15.125	2.60	11.71	2.50	8.64	16.6	66,0	297,4	63,5	219,5	7,5
	3 5/16	–	RLP11305	11.154	15.125	2.60	11.71	2.50	8.64	16.6	66,0	297,4	63,5	219,5	7,5
	3 3/8	–	RLP11306	11.154	15.125	2.60	11.71	2.50	8.64	16.6	66,0	297,4	63,5	219,5	7,5
	3 7/16	–	RLP11307	11.154	15.125	2.60	11.71	2.50	8.64	16.6	66,0	297,4	63,5	219,5	7,5
	3 1/2	–	RLP11308	11.154	15.125	2.60	11.71	2.50	8.64	16.6	66,0	297,4	63,5	219,5	7,5
	–	90	RLP11090M	11.154	15.125	2.88	11.89	2.50	8.92	17.2	73,2	302,0	63,5	226,6	7,8
	3 9/16	–	RLP11309	11.154	15.125	2.88	11.89	2.50	8.92	17.2	73,2	302,0	63,5	226,6	7,8
	3 5/8	–	RLP11310	11.154	15.125	2.88	11.89	2.50	8.92	17.2	73,2	302,0	63,5	226,6	7,8
	3 11/16	–	RLP11311	11.154	15.125	2.88	11.89	2.50	8.92	17.2	73,2	302,0	63,5	226,6	7,8
	3 3/4	95	RLP11312	11.154	15.125	2.88	11.89	2.50	8.92	17.2	73,2	302,0	63,5	226,6	7,8
	3 13/16	–	RLP11313	11.154	15.125	2.88	11.89	2.50	8.92	17.2	73,2	302,0	63,5	226,6	7,8
	3 7/8	–	RLP11314	11.154	15.125	2.88	11.89	2.50	8.92	17.2	73,2	302,0	63,5	226,6	7,8
	3 15/16	100	RLP11315	11.154	15.125	2.98	12.00	2.50	9.03	16.4	75,7	304,8	63,5	229,4	7,4
	4	–	RLP11400	11.154	15.125	2.98	12.00	2.50	9.03	16.4	75,7	304,8	63,5	229,4	7,4
	4 1/16	–	RLP11401	11.154	15.125	2.98	12.00	2.50	9.03	16.4	75,7	304,8	63,5	229,4	7,4
	4 1/8	105	RLP11402	11.154	15.125	2.98	12.00	2.50	9.03	16.4	75,7	304,8	63,5	229,4	7,4
	4 1/4	–	RLP11404	11.154	15.125	2.98	12.00	2.50	9.03	16.4	75,7	304,8	63,5	229,4	7,4
	4 5/16	110	RLP11405	11.154	15.125	3.25	12.27	2.50	9.30	17.6	82,6	311,7	63,5	236,2	8,0
	4 1/2	–	RLP11408	11.154	15.125	3.25	12.27	2.50	9.30	17.6	82,6	311,7	63,5	236,2	8,0
	–	115	RLP11115M	11.154	15.125	3.25	12.27	2.50	9.30	17.6	82,6	311,7	63,5	236,2	8,0
	4 5/8	–	RLP11410	11.154	15.125	3.25	12.27	2.50	9.30	17.6	82,6	311,7	63,5	236,2	8,0

IMPORTANT: RSL-drive units must be ordered separately to operate the RLP-Hexagon Cassettes.

Hexagon Cassettes for RSL-Series

Hexagon Range:
⅞ - 6⅛ inch

Hexagon Range:
27 - 155 mm

Maximum Operating Pressure:
690 bar

RSL
Series



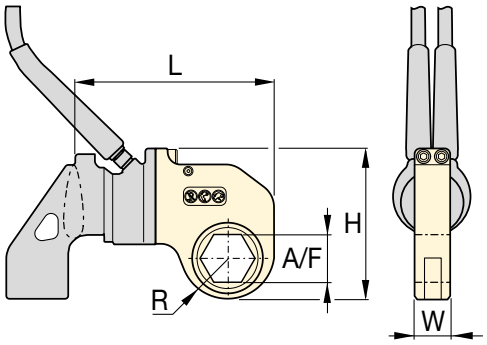

▼ **SELECTION CHART**

Drive Unit Model Number	Hexagon Size A/F		Hexagon Cassette Model Number	Maximum Torque		Dimensions (inch)					Dimensions (mm)				
	(inch)	(mm)		(Ft.lbs)	(Nm)	R	L	W	H	(lbs)	R	L	W	H	(kg)
RSL19000	2 15/16	75	RLP19215	11.000	14.916	2.45	12.72	2.75	9.44	21.5	62,2	323,1	69,9	239,8	9,8
	3	–	RLP19300	11.000	14.916	2.45	12.72	2.75	9.44	21.5	62,2	323,1	69,9	239,8	9,8
	3 1/16	–	RLP19301	11.000	14.916	2.45	12.72	2.75	9.44	21.5	62,2	323,1	69,9	239,8	9,8
	3 1/8	80	RLP19302	11.000	14.916	2.45	12.72	2.75	9.44	21.5	62,2	323,1	69,9	239,8	9,8
	3 3/16	–	RLP19303	16.000	21.696	2.77	13.04	2.75	9.76	22.6	70,4	331,2	69,9	247,9	10,3
	–	85	RLP19085M	16.000	21.696	2.77	13.04	2.75	9.76	22.6	70,4	331,2	69,9	247,9	10,3
	3 1/4	–	RLP19304	16.000	21.696	2.77	13.04	2.75	9.76	22.6	70,4	331,2	69,9	247,9	10,3
	3 5/16	–	RLP19305	16.000	21.696	2.77	13.04	2.75	9.76	22.6	70,4	331,2	69,9	247,9	10,3
	3 3/8	–	RLP19306	16.000	21.696	2.77	13.04	2.75	9.76	22.6	70,4	331,2	69,9	247,9	10,3
	3 7/16	–	RLP19307	16.000	21.696	2.77	13.04	2.75	9.76	22.6	70,4	331,2	69,9	247,9	10,3
	3 1/2	–	RLP19308	16.000	21.696	2.77	13.04	2.75	9.76	22.6	70,4	331,2	69,9	247,9	10,3
	–	90	RLP19090M	18.843	25.551	2.95	13.22	2.75	9.94	23.8	74,9	335,8	69,9	252,5	10,8
	3 9/16	–	RLP19309	18.843	25.551	2.95	13.22	2.75	9.94	23.8	74,9	335,8	69,9	252,5	10,8
	3 5/8	–	RLP19310	18.843	25.551	2.95	13.22	2.75	9.94	23.8	74,9	335,8	69,9	252,5	10,8
	3 11/16	–	RLP19311	18.843	25.551	2.95	13.22	2.75	9.94	23.8	74,9	335,8	69,9	252,5	10,8
	3 3/4	95	RLP19312	18.843	25.551	2.95	13.22	2.75	9.94	23.8	74,9	335,8	69,9	252,5	10,8
	3 13/16	–	RLP19313	18.843	25.551	2.95	13.22	2.75	9.94	23.8	74,9	335,8	69,9	252,5	10,8
	3 7/8	–	RLP19314	18.843	25.551	2.95	13.22	2.75	9.94	23.8	74,9	335,8	69,9	252,5	10,8
	3 15/16	100	RLP19315	18.843	25.551	3.30	13.57	2.75	10.28	25.3	83,8	344,7	69,9	261,1	11,5
	4	–	RLP19400	18.843	25.551	3.30	13.57	2.75	10.28	25.3	83,8	344,7	69,9	261,1	11,5
	4 1/16	–	RLP19401	18.843	25.551	3.30	13.57	2.75	10.28	25.3	83,8	344,7	69,9	261,1	11,5
	4 1/8	105	RLP19402	18.843	25.551	3.30	13.57	2.75	10.28	25.3	83,8	344,7	69,9	261,1	11,5
	4 3/16	–	RLP19403	18.843	25.551	3.30	13.57	2.75	10.28	25.3	83,8	344,7	69,9	261,1	11,5
	4 1/4	–	RLP19404	18.843	25.551	3.30	13.57	2.75	10.28	25.3	83,8	344,7	69,9	261,1	11,5
	4 5/16	110	RLP19405	18.843	25.551	3.44	13.71	2.75	10.43	25.6	87,4	348,2	69,9	264,9	11,6
	4 3/8	–	RLP19406	18.843	25.551	3.44	13.71	2.75	10.43	25.6	87,4	348,2	69,9	264,9	11,6
	4 7/16	–	RLP19407	18.843	25.551	3.44	13.71	2.75	10.43	25.6	87,4	348,2	69,9	264,9	11,6
	4 1/2	–	RLP19408	18.843	25.551	3.44	13.71	2.75	10.43	25.6	87,4	348,2	69,9	264,9	11,6
	–	115	RLP19115M	18.843	25.551	3.44	13.71	2.75	10.43	25.6	87,4	348,2	69,9	264,9	11,6
	4 9/16	–	RLP19409	18.843	25.551	3.44	13.71	2.75	10.43	25.6	87,4	348,2	69,9	264,9	11,6
	4 5/8	–	RLP19410	18.843	25.551	3.44	13.71	2.75	10.43	25.6	87,4	348,2	69,9	264,9	11,6

IMPORTANT: RSL-drive units must be ordered separately to operate the RLP-Hexagon Cassettes.

Hexagon Cassettes for RSL-Series

ENERPAC

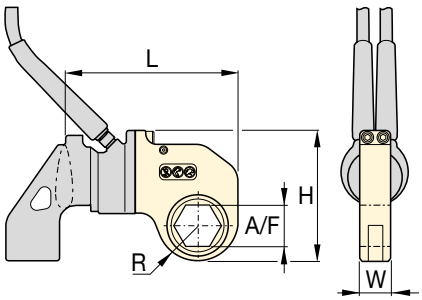

Hexagon Range:
⅞ - 6⅛ inch

Hexagon Range:
27 - 155 mm

Maximum Operating Pressure:
690 bar

RSL Series



▼ **SELECTION CHART**

Drive Unit Model Number	Hexagon Size A/F		Hexagon Cassette Model Number	Maximum Torque		Dimensions (inch)					Dimensions (mm)				
	(inch)	(mm)		(Ft.lbs)	(Nm)	R	L	W	H	(lbs)	R	L	W	H	(kg)
RSL28000	3⅛	80	RLP28302	16.000	21.696	2.56	14.36	3.00	10.54	27.6	65,0	364,7	76,2	267,7	12,5
	3³⁄₁₆	–	RLP28303	16.000	21.696	2.56	14.36	3.00	10.54	27.6	65,0	364,7	76,2	267,7	12,5
	–	85	RLP28085M	16.000	21.696	2.56	14.36	3.00	10.54	27.6	65,0	364,7	76,2	267,7	12,5
	3¼	–	RLP28304	16.000	21.696	2.56	14.36	3.00	10.54	27.6	65,0	364,7	76,2	267,7	12,5
	3⁵⁄₁₆	–	RLP28305	16.000	21.696	2.56	14.36	3.00	10.54	27.6	65,0	364,7	76,2	267,7	12,5
	3⅜	–	RLP28306	16.000	21.696	2.56	14.36	3.00	10.54	27.6	65,0	364,7	76,2	267,7	12,5
	3⁷⁄₁₆	–	RLP28307	16.000	21.696	2.56	14.36	3.00	10.54	27.6	65,0	364,7	76,2	267,7	12,5
	3½	–	RLP28308	16.000	21.696	2.56	14.36	3.00	10.54	27.6	65,0	364,7	76,2	267,7	12,5
	–	90	RLP28090M	22.000	29.832	2.92	14.36	3.00	10.77	28.8	74,2	364,7	76,2	273,6	13,1
	3⁹⁄₁₆	–	RLP28309	22.000	29.832	2.92	14.36	3.00	10.77	28.8	74,2	364,7	76,2	273,6	13,1
	3⅝	–	RLP28310	22.000	29.832	2.92	14.36	3.00	10.77	28.8	74,2	364,7	76,2	273,6	13,1
	3¹¹⁄₁₆	–	RLP28311	22.000	29.832	2.92	14.36	3.00	10.77	28.8	74,2	364,7	76,2	273,6	13,1
	3¾	95	RLP28312	22.000	29.832	2.92	14.36	3.00	10.77	28.8	74,2	364,7	76,2	273,6	13,1
	3¹³⁄₁₆	–	RLP28313	22.000	29.832	2.92	14.36	3.00	10.77	28.8	74,2	364,7	76,2	273,6	13,1
	3⅞	–	RLP28314	22.000	29.832	2.92	14.36	3.00	10.77	28.8	74,2	364,7	76,2	273,6	13,1
	3¹⁵⁄₁₆	100	RLP28315	28.002	37.971	3.29	14.47	3.00	11.14	31.7	83,6	367,5	76,2	283,0	14,4
	4	–	RLP28400	28.002	37.971	3.29	14.47	3.00	11.14	31.7	83,6	367,5	76,2	283,0	14,4
	4¹⁄₁₆	–	RLP28401	28.002	37.971	3.29	14.47	3.00	11.14	31.7	83,6	367,5	76,2	283,0	14,4
	4⅛	105	RLP28402	28.002	37.971	3.29	14.47	3.00	11.14	31.7	83,6	367,5	76,2	283,0	14,4
	4³⁄₁₆	–	RLP28403	28.002	37.971	3.29	14.47	3.00	11.14	31.7	83,6	367,5	76,2	283,0	14,4
	4¼	–	RLP28404	28.002	37.971	3.29	14.47	3.00	11.14	31.7	83,6	367,5	76,2	283,0	14,4
	4⁵⁄₁₆	110	RLP28405	28.002	37.971	3.43	14.61	3.00	11.28	31.5	87,1	371,1	76,2	286,5	14,3
	4⅜	–	RLP28406	28.002	37.971	3.43	14.61	3.00	11.28	31.5	87,1	371,1	76,2	286,5	14,3
	4⁷⁄₁₆	–	RLP28407	28.002	37.971	3.43	14.61	3.00	11.28	31.5	87,1	371,1	76,2	286,5	14,3
	4½	–	RLP28408	28.002	37.971	3.43	14.61	3.00	11.28	31.5	87,1	371,1	76,2	286,5	14,3
	–	115	RLP28115M	28.002	37.971	3.43	14.61	3.00	11.28	31.5	87,1	371,1	76,2	286,5	14,3
	4⁹⁄₁₆	–	RLP28409	28.002	37.971	3.43	14.61	3.00	11.28	31.5	87,1	371,1	76,2	286,5	14,3
	4⅝	–	RLP28410	28.002	37.971	3.43	14.61	3.00	11.28	31.5	87,1	371,1	76,2	286,5	14,3
	4¾	120	RLP28412	28.002	37.971	3.65	14.83	3.00	11.50	33.5	92,7	376,7	76,2	292,1	15,2
	–	123	RLP28123M	28.002	37.971	3.65	14.83	3.00	11.50	33.5	92,7	376,7	76,2	292,1	15,2
	4⅞	–	RLP28414	28.002	37.971	3.65	14.83	3.00	11.50	33.5	92,7	376,7	76,2	292,1	15,2
	5	–	RLP28500	28.002	37.971	3.65	14.83	3.00	11.50	33.5	92,7	376,7	76,2	292,1	15,2
	5⅛	130	RLP28502	28.002	37.971	3.79	14.97	3.00	11.64	33.2	96,3	380,2	76,2	295,7	15,1
	5³⁄₁₆	–	RLP28503	28.002	37.971	3.79	14.97	3.00	11.64	33.2	96,3	380,2	76,2	295,7	15,1
	5¼	–	RLP28504	28.002	37.971	3.79	14.97	3.00	11.64	33.2	96,3	380,2	76,2	295,7	15,1
	5⅜	135	RLP28506	28.002	37.971	3.79	14.97	3.00	11.64	33.2	96,3	380,2	76,2	295,7	15,1
	5½	140	RLP28508	28.002	37.971	4.05	15.23	3.00	11.90	33.5	102,9	386,8	76,2	302,3	15,2
	5⁹⁄₁₆	–	RLP28509	28.002	37.971	4.05	15.23	3.00	11.90	33.5	102,9	386,8	76,2	302,3	15,2
	5⅝	–	RLP28510	28.002	37.971	4.05	15.23	3.00	11.90	33.5	102,9	386,8	76,2	302,3	15,2
	5¾	145	RLP28512	28.002	37.971	4.05	15.23	3.00	11.90	33.5	102,9	386,8	76,2	302,3	15,2
	5⅞	150	RLP28514	28.002	37.971	4.22	15.48	3.00	12.15	34.5	107,2	393,2	76,2	308,6	15,6
	–	151	RLP28151M	28.002	37.971	4.22	15.48	3.00	12.15	34.5	107,2	393,2	76,2	308,6	15,6
	6	–	RLP28600	28.002	37.971	4.22	15.48	3.00	12.15	34.5	107,2	393,2	76,2	308,6	15,6
	6⅛	155	RLP28602	28.002	37.971	4.22	15.48	3.00	12.15	34.5	107,2	393,2	76,2	308,6	15,6

IMPORTANT: RSL-drive units must be ordered separately to operate the RLP-Hexagon Cassettes.

Accessories for RSL-Series Torque Wrenches

TWMPS503, Torque Wrench Moly Paste

- Enerpac 503 Moly Paste reduces friction on threaded fasteners – bolts, nuts and studs
- The low and uniform friction coefficient of 0.06 (torque coefficient, K, of 0.10) creates reliable assembly conditions
- This lubricant stays in place through heat, load and vibration to insure trouble-free disassembly from -29 °C to 400 °C (-20 °F to 750 °F)
- Can of 1,8 kg (4 lb).

▼ TWMPS503



for RSL Series



ERA-Series, Extended Reaction Arms

For Torque Wrench Model Nr.	Model Number	Dimensions (mm) A	B	C	D	E	(kg)
RSL1500 + RSQ	ERA15114	87	145	195	29	36	0,9
	ERA15228	113	181	230	29	36	1,8
	ERA15342	139	226	276	29	36	2,7
	ERA15456	164	236	286	29	36	3,6
	ERA15570	189	287	337	29	36	4,5
RSL3000 + RSQ	ERA30114	105	195	257	34	41	2,7
	ERA30228	131	231	293	34	41	3,6
	ERA30342	156	266	328	34	41	4,5
	ERA30456	181	302	364	34	41	5,4
RSL5000 + RSQ	ERA50114	131	208	284	44	48	4,1
	ERA50228	156	243	320	44	48	5,0
	ERA50342	181	279	355	44	48	5,9
	ERA50456	207	314	391	44	48	6,8
RSL11000 + RSQ	ERA110114	125	219	296	51	59	6,3
	ERA110228	150	255	331	51	59	7,3
	ERA110342	176	291	367	51	59	8,2
	ERA110456	201	326	402	51	59	9,1
RSL28000 + RSQ	ERA280228	171	335	411	57	85	11,3
	ERA280342	197	370	447	57	85	13,6

NOTE: Extended Reaction Arms for RSL8000 and RSL19000 are available on request.

- Only to be used on RSL-drive units with RSQ-square drive wrenches
- Used in place of standard reaction arm
- Lightweight interchangeable design
- Full torque rated.

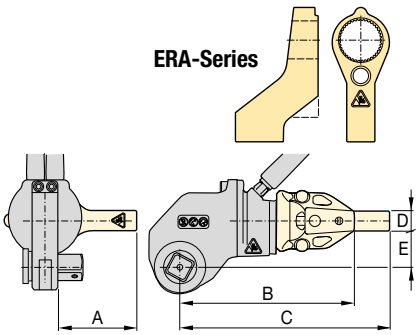

ERT-Series, Extended Reaction Tubes

For Torque Wrench Model Nr.	Model Number	Dimensions (mm) A	B	Ø C	(kg)
RSL1500 + RLP	ERT152	157	51	57	0,9
	ERT156	259	152	57	1,6
	ERT159	335	229	57	2,5
	ERT1512	411	305	57	3,4
	ERT1524	716	610	57	6,7
RSL3000 + RLP	ERT3012	429	305	70	3,0
	ERT3024	734	610	70	5,9
RSL5000 + RLP	ERT5012	451	305	89	5,6
	ERT5024	756	610	89	11,3
RSL11000 + RLP	ERT1106	330	152	95	2,1
	ERT11012	483	305	95	4,1
	ERT11018	635	457	95	6,1
	ERT11024	787	610	95	8,4
RSL19000 + RLP	ERT19024	800	610	127	16,7
RSL28000 + RLP	ERT2806	351	152	127	3,6
	ERT28012	503	305	127	7,3
	ERT28018	655	457	127	10,9
	ERT28024	808	610	127	16,6

NOTE: Extended Reaction Tubes for RSL8000 are available on request.

- Only to be used on RSL-drive units with RLP-hexagon cassettes
- Used in place of standard reaction arm
- One piece steel design, durable and simple
- Increases tool fit in restricted access areas
- Full torque rated.

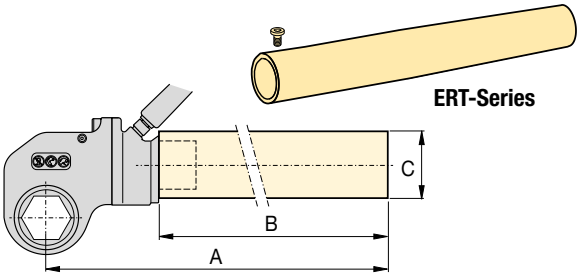

RSL-Series, Slimline Hexagon Cassettes

ENERPAC

▼ RSL-Drive Unit with interchangeable RLP...SL Slimline Hexagon Cassette



Setting New Standards in Safety, Simplicity and Performance

Simplicity

- Minimum nose radius for trouble-free tool fit which makes it uniquely equipped to access tight spaces
- Simple robust alloy steel design with three moving parts for reduced maintenance
- Robust handles are available for both sides and the tops of cassettes to allow for extra maneuverability
- Proven to perform even in the harshest environments
- Reaction arm has a simple dial lock for rapid change
- Designed to give optimum strength to weight and torque to weight ratios.

Versatility

- Interchangeable cassette design
- Drive unit / hexagon cassette combination for limited height in line solutions
- Wide range of hexagon sizes available for all applications.

Accuracy

- Constant torque output provides accuracy of ± 3% across the full stroke.

Ease of Use

- Few moving parts are easily accessible for quick field maintenance
- Innovative design that completely encloses all moving parts and minimizes pinch points.



Torque Pumps

Visit enerpac.com for system matched air and electric torque pumps that are ideal for use with hydraulic torque wrenches.

Page: 265

Torque Wrench Options and Accessories

Optional accessories are available for maximum versatility. Please contact your Enerpac representative to help you select the optimum solution for your application.

Page: 241



Back-Up Spanners

To be used to stop the back nut from turning during make up or break out. Two hexagon sizes in one tool.

Hexagon Sizes (A/F)		Back-Up Spanner Model Number
mm	inch	
27 - 32	1 1/16 - 1 1/4"	BUS01
36 - 41	1 7/16 - 1 5/8"	BUS02
46 - 50	1 13/16 - 2"	BUS03
55 - 60	2 3/16 - 2 3/8"	BUS04
65 - 70	2 9/16 - 2 3/4"	BUS05
75 - 80	2 15/16 - 3 1/8"	BUS06
–	3 1/2 - 3 7/8"	BUS07
–	4 1/4 - 4 5/8"	BUS08
85 - 90	–	BUS09
95 - 100	3 3/4 - 3 15/16"	BUS10
105 - 110	4 1/8 - 4 15/16"	BUS11
115 - 120	–	BUS12

Page: 217

Slimline Stepped-Width Hexagon Cassettes for RSL-Series

Slimline Stepped-Width Hexagon Cassettes

Accessing narrow spaces normally requires significantly reducing the width of the torque wrench. For the tool operator, this has always meant vastly reduced tool durability, and/or reduced torque output.

By using the highest-grade materials and perfecting the geometry, the RSL Slimline cassettes are able to provide greater torque, get into tighter spaces, and vastly outperform the competition in product durability.

RSL Series



Hexagon Range:
1¼ - 3³⁄₁₆ inch

Hexagon Range:
32 - 80 mm

Maximum Operating Pressure:
690 bar

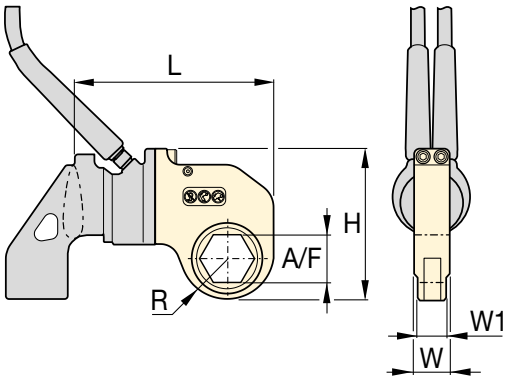



Select the Right Torque

Choose your Enerpac Torque Wrench using the untightening rule of thumb: Loosening torque equals about 250% of tightening torque.

Page: 408



Torque Wrench Hoses

Use Enerpac THQ700-Series torque wrench hoses with RSL-Series torque wrenches to ensure the integrity of your hydraulic system.

Page: 249

▼ SELECTION CHART

Drive Unit Model Number	Hexagon Size A/F (inch)	Hexagon Size A/F (mm)	Slimline Hexagon Cassette Model Nr.	Maximum Torque * (Ft.lbs)	Maximum Torque * (Nm)	Dimensions (inch) R	L	W	W1	H	(lbs)	Dimensions (mm) R	L	W	W1	H	(kg)
RSL1500	1¼	32	RLP1104SL	375	509	1.03	6.12	1.25	1.00	4.57	2.2	26,2	155,4	31,8	25,4	116,1	1,0
	1⁷⁄₁₆	36	RLP1107SL	658	892	1.15	6.24	1.25	1.00	4.69	2.3	29,2	158,5	31,8	25,4	119,1	1,0
	1⅝	41	RLP1110SL	831	1127	1.31	6.41	1.25	1.00	4.86	2.7	33,3	162,8	31,8	25,4	123,4	1,2
	1¹³⁄₁₆	46	RLP1113SL	831	1127	1.40	6.49	1.25	1.00	4.94	2.7	35,6	164,8	31,8	25,4	125,5	1,2
	2	50	RLP1200SL	831	1127	1.48	6.58	1.25	1.00	5.03	2.7	37,6	167,1	31,8	25,4	127,8	1,2
RSL3000	2	50	RLP3200SL	1354	1836	1.60	8.04	1.38	1.13	5.92	4.5	40,6	204,2	35,1	28,7	150,4	2,0
	2³⁄₁₆	55	RLP3203SL	1604	2175	1.76	8.16	1.38	1.13	6.08	4.7	44,7	207,3	35,1	28,7	154,4	2,1
	2⅜	60	RLP3206SL	1604	2175	1.84	8.25	1.38	1.13	6.15	4.8	46,7	209,6	35,1	28,7	156,2	2,2
	2⁹⁄₁₆	65	RLP3209SL	1604	2175	1.95	8.14	1.38	1.13	6.26	4.6	49,5	206,8	35,1	28,7	159,0	2,1
	2¾	70	RLP3212SL	1604	2175	2.04	8.23	1.38	1.13	6.36	4.4	51,8	209,0	35,1	28,7	161,5	2,0
	2¹⁵⁄₁₆	75	RLP3215SL	1604	2175	2.16	8.34	1.38	1.13	6.54	4.7	54,9	211,8	35,1	28,7	166,1	2,1
RSL5000	2¾	70	RLP5212SL	4173	5659	2.16	9.63	1.75	1.62	7.07	7.5	54,9	244,6	44,5	41,1	179,6	3,4
	3⅛	80	RLP5302SL	4173	5659	2.26	9.73	1.75	1.62	7.17	7.2	57,4	247,1	44,5	41,1	182,1	3,3
RSL8000	2³⁄₁₆	55	RLP8203SL	2487	3372	1.71	9.53	2.25	2.00	6.84	8.5	43,4	242,1	57,2	50,8	173,7	3,9
	2⅜	60	RLP8206SL	3198	4336	1.87	9.67	2.25	2.00	7.00	8.9	47,5	245,6	57,2	50,8	177,8	4,0
	2⁹⁄₁₆	65	RLP8209SL	4122	5589	2.01	9.67	2.25	2.00	7.13	9.0	51,1	245,6	57,2	50,8	181,1	4,1
	2¾	70	RLP8212SL	5587	7576	2.16	9.82	2.25	2.00	7.28	9.6	54,9	249,4	57,2	50,8	184,9	4,4
	2¹⁵⁄₁₆	75	RLP8215SL	5587	7576	2.24	9.90	2.25	2.00	7.36	9.6	56,9	251,5	57,2	50,8	186,9	4,4
	3⅛	80	RLP8302SL	5587	7576	2.26	9.92	2.25	2.00	7.39	9.3	57,4	252,0	57,2	50,8	187,7	4,2
	3³⁄₁₆	–	RLP8303SL	4740	6427	2.26	9.92	2.25	2.00	7.39	9.3	57,4	252,0	57,2	50,8	187,7	4,2

IMPORTANT: RSL-drive units must be ordered separately to operate the RLP-SL-Hexagon Cassettes.

* Minimum Torque Output at 69 bar: 10%

Square Drive Hydraulic Torque Wrenches

ENERPAC

▼ RSL drive unit with interchangeable RSQ square drive cassette



Setting New Standards in Safety, Simplicity and Performance

Safety and Performance

- Innovative design that completely encloses all moving parts and minimizes pinch points
- 30-35° rotation angle provides added productivity while avoiding "tool lock on" which is common with some torque wrench designs.

Simplicity

- Simple robust design with just three moving parts for reduced maintenance
- Robust handles are available for both sides and the tops of cassettes to allow for extra maneuverability
- Pull-type square drive release for quickly reversing the square drive for tightening or loosening.

Versatility

- Square Drive Sets available with Interchangeable Hexagon Cassettes
- Power head / square drive combination for flexible use with standard impact quality sockets
- Reaction arm has a simple dial lock for rapid change.

Accuracy

- Constant torque output provides accuracy of ± 3% across the full stroke.

Torque Wrench Options and Accessories

Optional accessories are available for maximum versatility. Please contact your Enerpac representative to help you select the optimum solution for your application.

Page: 241



BSH-Series Sockets

Heavy-Duty Impact Sockets for power driven torqueing equipment.

Page: 216



Back-Up Spanners, BUS-Series

To be used to stop the back nut from turning during make up or break out. Two hexagon sizes in one tool.

Page: 217



Torque Wrench Hoses

Use Enerpac THQ700-Series torque wrench hoses with RSL-Series torque wrenches to ensure the integrity of your hydraulic system.

2 meters long, 2 hoses	THQ702T
6 meters long, 2 hoses	THQ706T
12 meters long, 2 hoses	THQ712T



Torque Pumps

Visit enerpac.com for system matched air and electric torque pumps that are ideal for use with hydraulic torque wrenches.

Page: 265

Square Drive Hydraulic Torque Wrenches

TORQUE WRENCH SELECTION (based on socket size range)

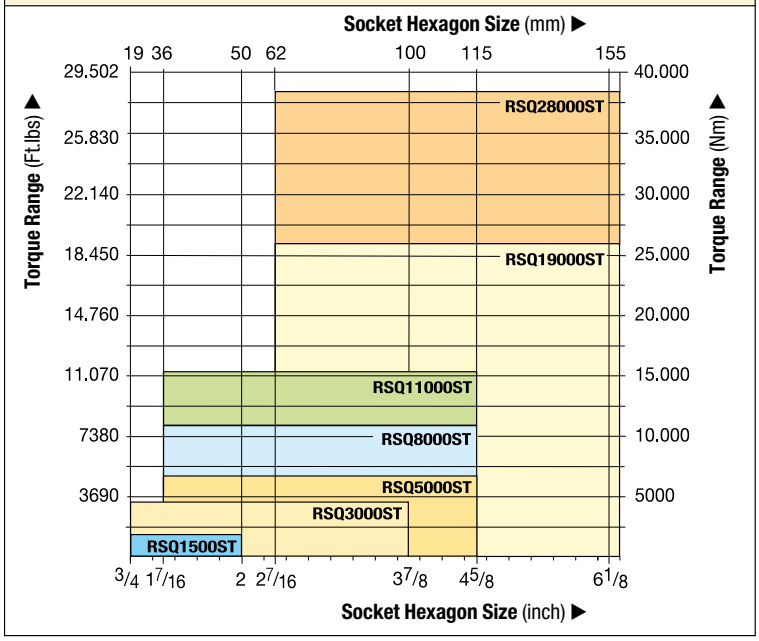

RSL Series



Maximum Torque Output:
1408 - 28.002 Ft.lbs

Maximum Torque Output:
1909 - 37.965 Nm

Square Drive Range:
¾ - 2½ inch

Maximum Operating Pressure:
690 bar

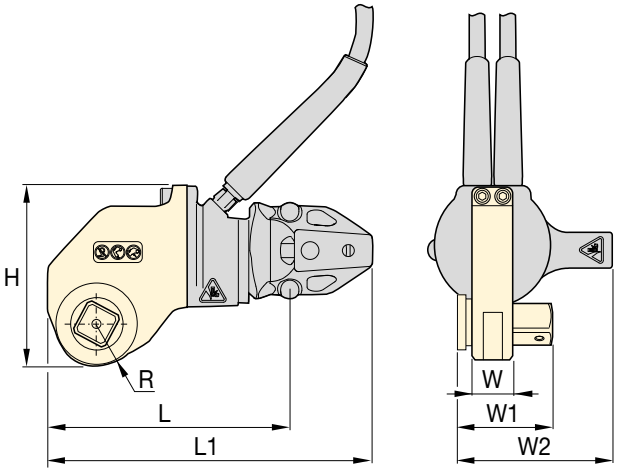

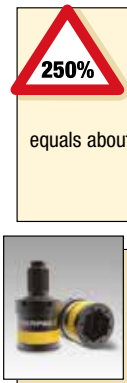

Select the Right Torque

Choose your Enerpac Torque Wrench using the untightening rule of thumb: Loosening torque equals about 250% of tightening torque.

Safe T™ Torque Lock

The Safe T™ Torque Lock is suitable for all bolted applications from 190 Nm to 15.000 Nm using a heavy duty impact socket.

The patented mechanical locking system creates a hands-free torque wrench solution suitable for Enerpac only square drive tools.

Suitable for RSQ3000, RSQ5000 and RSQ11000.

Page: 218

▼ SELECTION CHART

Maximum Torque Output (Ft.lbs)	Maximum Torque Output (Nm)	Square Drive Size (inch)	Square Drive Cassette Model Number [1]	Square Drive Torque Wrench Set Model Number [2]	Dimensions (mm) W	W1	W2	H	L	L1	R	Weight (kg) Drive Unit (without reaction arm)	Reaction Arm	Square Drive Cassette
1408	1909	¾	**RSQ1500**	**RSQ1500ST**	32	58	101	114	160	189	24	1,6	0,5	1,3
3080	4176	1	**RSQ3000**	**RSQ3000ST**	38	73	124	141	195	262	32	2,6	1,0	2,4
5303	7190	1½	**RSQ5000**	**RSQ5000ST**	45	94	160	163	235	296	39	4,1	1,8	4,1
7862	10.659	1½	**RSQ8000**	**RSQ8000ST**	61	105	160	169	241	300	39	4,8	2,0	5,3
11.154	15.123	1½	**RSQ11000**	**RSQ11000ST**	64	118	170	201	284	315	48	5,3	3,0	8,4
18.843	25.547	2½	**RSQ19000**	**RSQ19000ST**	83	162	265	241	342	482	64	9,1	7,1	13,1
28.002	37.965	2½	**RSQ28000**	**RSQ28000ST**	89	166	227	263	358	536	64	10,0	5,0	17,9

[1] When ordering an RSQ Square Drive Cassette, the RSL-Drive Unit must be ordered separately.
[2] An RSQ....ST Torque Wrench Set includes RSQ-Square Drive Cassette, RSL-Drive Unit with Hoses and Reaction Arm.

DSX-Series, Aluminium Torque Wrenches

ENERPAC

▼ Shown: **DSX11000**



Safety and Performance

- High-strength, light-weight aluminium, slimline design suited for complete operator safety
- Fully enclosed drive for maximum safety
- Built-in, work-at-height safety tether connection
- Retained quick release push-button
- Patented, easy-to-use, quick release, retained reaction arm
- Fine tooth ratchet prevents the tool 'locking on'
- High-cycle design with fewer moving parts making it a more efficient tool to operate, maintain or repair
- 35° rotation angle and rapid return stroke for fast operation.

Simplicity

- Includes a robust handle or handle with lifting eye bolt which mounts on either side of the tool for extra maneuverability and safer operation
- Push-button square drive and reaction arm for fast changes and adjustments
- Easily accessible work-at-height connection point.

Accuracy

- Constant torque output provides accuracy of ± 3% across the full stroke.

ATEX declared

- All DSX tools are CE - ATEX declared.

Setting Industry-First Safety Standards



Work-at-Height Connection

Built-in, work-at-height safety tether connection.



Fully Retained Reaction Arm

Patented, fully retained reaction arm with easy-to-use quick release, helps prevent injuries when working-at-height.



Secured Square Drive

Retained quick release push-button.



Ergonomic Tool Handle

Robust ergonomic positioning handle comes supplied as standard with every DSX tool. The SHW10EA is a handle with lifting eye for the DSX25000.

Compatible DSX-Series wrenches	Ergonomic Handle (Standard)
DSX1500, 3000, 5000	**SWH6A**
DSX11000	**SWH10A**
DSX25000	**SWH10EA**

Bolting Integrity Software

Enerpac Bolting Integrity Software Solutions play a key role in implementing and managing an Integrity Program for bolted connections.

The software offers Tool selection, Bolt Load calculations and Tool pressure settings, as well as a combined Application Data Sheet and Joint Completion Report.

Custom Joint information can also be entered.
See page 412.

Square Drive Hydraulic Torque Wrenches

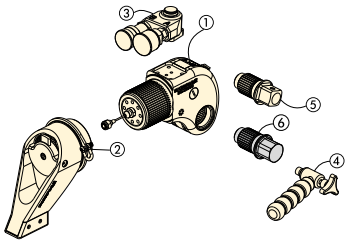

Standard are: ① ② ③ ④ ⑤
Item ⑥ is optional.

① Drive Unit
② Reaction Arm
③ Hose Swivel
④ Ergonomic Tool Handle
⑤ Square Drive
⑥ Allen Key-Drive (option)

Select the Right Torque

Choose your Enerpac Torque Wrench using the untightening rule of thumb: Loosening torque equals about 250% of tightening torque.

DSX Series



Nominal Torque Output:
32.617 Nm | 24.057 Ft.lbs

Square Drive Range:
¾ - 2½ inch

Nose Radius:
24 - 64 mm

Maximum Operating Pressure:
690 bar

TORQUE WRENCH SELECTION (based on socket size range)

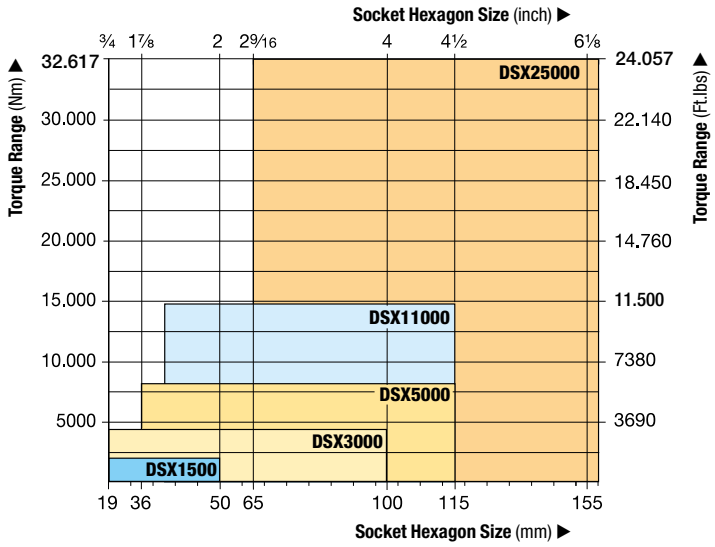



BUS-Series, Back-Up Spanners

Hands-free tool to be used to stop the back nut from turning during make up or break out.

Page: 217

▼ *The rigid design of the DSX-Series torque wrenches provides durability, reliability and safety.*





BSH-Series Sockets

Use only Heavy-Duty Impact Sockets for power driven torqueing equipment.

Page: 216

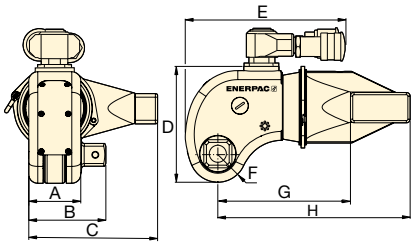

Nominal Torque at 690 bar (Nm)	Nominal Torque at 690 bar (Ft.lbs)	Minimum Torque at 69 bar (Nm)	Minimum Torque at 69 bar (Ft.lbs)	Square Drive Size (inch)	Square Drive Model Nr. (included with wrench)	Torque Wrench Model Number	Dimensions (mm) A	B	C	D	E	F	G	H	(kg)
1913	1411	191	141	¾	DSX1500-08	**DSX1500**	44	67	107	96	145	24	114	163	2,2
4383	3233	438	323	1	DSX3000-08	**DSX3000**	58	86	144	129	171	32	148	215	4,8
7640	5635	764	563	1½	DSX5000-08	**DSX5000**	69	112	173	148	192	38	180	260	8,1
14.914	11.000	1491	1100	1½	DSX11000-08	**DSX11000**	87	129	215	181	222	48	227	325	14,4
32.617	24.057	3262	2406	2½	DSX25000-08	**DSX25000**	117	176	288	244	266	64	281	426	32,5

DSX-Series, Allen-Key Drives

ENERPAC

Maximum Torque Output:
32.617 Nm

Hexagon Size Allen Drive:
½ - 2¼ inch

Hexagon Size Allen Drive:
14 - 85 mm

For DSX Series



Torque Wrench	Optional Allen-Key Drives, Imperial				Optional Allen-Key Drives, Metric			
				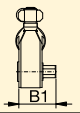				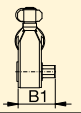
Model Number (max. torque)	**Hexagon Size** (inch)	**Maximum Torque** (Ft.Lbs)	**Model Number**	**Dim.** B1 (mm)	**Hexagon Size** (mm)	**Maximum Torque** (Nm)	**Model Number**	**Dim.** B1 (mm)
DSX1500 (1411 Ft.lbs) (1913 Nm)	½	350	**DDA15008**	67	**14**	644	**DDA1514**	67
	⅝	690	**DDA15010**	67	**17**	1152	**DDA1517**	67
	¾	1200	**DDA15012**	67	**19**	1627	**DDA1519**	67
	⅞	1411	**DDA15014**	67	**22**	1913	**DDA1522**	67
	1	1411	**DDA15100**	67	**24**	1913	**DDA1524**	67
DSX3000 (3233 Ft.lbs) (4383 Nm)	⅝	690	**DDA30010**	86	**17**	1152	**DDA3017**	86
	¾	1200	**DDA30012**	86	**19**	1627	**DDA3019**	86
	⅞	1900	**DDA30014**	86	**22**	2495	**DDA3022**	86
	1	2830	**DDA30100**	86	**24**	3376	**DDA3024**	86
	1⅛	3233	**DDA30102**	86	**27**	4383	**DDA3027**	86
	1¼	3233	**DDA30104**	86	**30**	4383	**DDA3030**	86
	–	–	-	86	**32**	4383	**DDA3032**	86
DSX5000 (5635 Ft.lbs) (7640 Nm)	⅝	690	**DDA50010**	112	**17**	1152	**DDA5017**	112
	¾	1200	**DDA50012**	112	**19**	1627	**DDA5019**	112
	⅞	1900	**DDA50014**	112	**22**	2495	**DDA5022**	112
	1	2830	**DDA50100**	112	**24**	3376	**DDA5024**	112
	1⅛	5325	**DDA50102**	112	**27**	4610	**DDA5027**	112
	1¼	5635	**DDA50104**	112	**30**	7640	**DDA5030**	112
	–	–	–	-	**32**	7640	**DDA5032**	112
DSX11000 (11.000 Ft.lbs) (14.914 Nm)	1¼	5635	**DDA110104**	129	**30**	7640	**DDA11030**	129
	1⅜	9958	**DDA110106**	129	**32**	7640	**DDA11032**	129
	1½	9958	**DDA110108**	129	**36**	10.846	**DDA11036**	129
	1⅝	11.000	**DDA110110**	129	**41**	14.914	**DDA11041**	129
	1¾	11.000	**DDA110112**	129	**46**	14.914	**DDA11046**	129
DSX25000 (24.057 Ft.lbs) (32.617 Nm)	1½	9958	**DDA250104**	176	**36**	10.846	**DDA25036**	176
	1⅝	16.433	**DDA250106**	176	**41**	16.107	**DDA25041**	176
	1¾	15.200	**DDA250112**	176	**46**	22.777	**DDA25046**	176
	1⅞	22.777	**DDA250114**	176	**50**	29.211	**DDA25050**	176
	2	24.057	**DDA250200**	176	**55**	32.617	**DDA25055**	176
	2¼	24.057	**DDA250204**	176	**60**	32.617	**DDA25060**	176
	–	–	–	-	**65**	32.617	**DDA25065**	176
	–	–	–	-	**70**	32.617	**DDA25070**	176
	–	–	–	-	**75**	32.617	**DDA25075**	176
	–	–	–	-	**85**	32.617	**DDA25085**	176

Torque Wrench Hoses

▼ THQ706T



THQ
Series

Hose Lengths:
2, 6 and 12 metres

Maximum Operating Pressure:
700 bar



HT, B-Series, 1500 bar Hoses and Fittings for Tensioning

Bolt tensioning equipment require different hoses, couplers and fittings than torque wrenches and pumps.

Page: 301



Premium Hydraulic Oil

Use only genuine Enerpac hydraulic oil. Wrong fluid can destroy seals and pump and will render your warranty null and void your guarantee.

Page: 132

Twin Torque Wrench Hose

- Thermo-plastic safety dual hoses
- For use S, W, RSL, DSX and HMT-Series torque wrenches and 700 bar torque pumps
- With 1/4" Spin-on Torque Wrench Couplers
- For demanding applications, featuring a 4:1 safety factor
- Maximum working pressure of 700 bar
- Outside jacket is polyurethane, to provide maximum abrasion resistance
- Low volumetric expansion under pressure to enhance overall system efficiency
- Crimped-on vinyl strain relief for improved life and durability on all models.



Use the THQ-Series hoses with Enerpac torque wrenches and pumps to ensure the integrity of your hydraulic system. ▶

Internal Diameter (mm)	Hose Length (m)	Model Number	Maximum Operating Pressure (bar)	Hose Ends 1/4" Spin-on Torque Wrench Couplers		Weight (kg)
				Hose one	Hose two	
6,4	2,0	**THQ702T**	700	female half **TR630** + male half **TH630**	male half **TH630** + female half **TR630**	2,2
	6,0	**THQ706T**	700	female half **TR630** + male half **TH630**	male half **TH630** + female half **TR630**	4,5
	12,0	**THQ712T**	700	female half **TR630** + male half **TH630**	male half **TH630** + female half **TR630**	7,6

HMT-Series, Modular Torque Wrenches

ENERPAC

▼ HMT-Drive Units with interchangeable HLP-Low Profile Cassette and HSQ-Square Drive Cassette



Modular, Durable, Fast and Efficient Torque for Low Profile and Square Drive Applications

The HMT-Series is a range of fast, durable and efficient modular hydraulic torque wrenches, enabling you to tackle almost any bolting application. Interchange cassettes with ease, switching the HLP low profile hexagon cassette with the HSQ square drive whenever your application demands.

As an added benefit, tools and cassettes are interchangeable with many other well-known brands, allowing you the freedom to use the tools at your disposal whilst reducing the cost of upgrading your legacy torque wrench inventory to high quality Enerpac equipment.

The tool itself has been carefully designed and manufactured, utilising superior alloys and surface treatments to make it lightweight, up to 25% faster and more than twice as durable as other tools in the same class.

Safety and Performance

- **Supplied with an ergonomic tool safety handle as standard**
- **The HMT Modular Torque/Tool is also supplied with a link pin retainer as standard.**

Versatility

- **Interchangeable with other manufacturers**
- **HMT is able to solve all of your bolting challenges quickly and safely, with one or more attachment options, making it suitable for any application.**

Simplicity

- **The HMT is part of a modular system which is made up of a single power head and one attachment; the HMT-Drive Unit and HLP-Hexagon Cassette or HSQ-Square Drive Cassette.**

Accuracy

- **Constant torque output provides accuracy of ± 3% across the full stroke.**

Bolting Integrity Software

The software offers Tool selection, Bolt Load calculations and Tool pressure settings, as well as, a combined Application Data Sheet and Joint Completion Report. Custom Joint information can also be entered.

Page: 412



BUS-Series, Back-Up Spanners

To be used to stop the back nut from turning during make up or break out. Two hexagon sizes in one tool.

Page: 217



Torque Pumps

Visit enerpac.com for system matched air and electric torque pumps that are ideal for use with hydraulic torque wrenches.

Page: 265



Torque Wrench Hoses

Use Enerpac THQ-Series hoses with HMT-Series torque wrenches to ensure the integrity of your hydraulic system. See page 249.

2 m long, 2 hoses	**THQ702T**
6 m long, 2 hoses	**THQ706T**
12 m long, 2 hoses	**THQ712T**

Drive Units for Hexagon & Square Drive Cassettes

One Drive, Two Tools

One HMT-Hydraulic Torque Wrench fits HLP-Low Profile or HSQ Square Drive cassette.

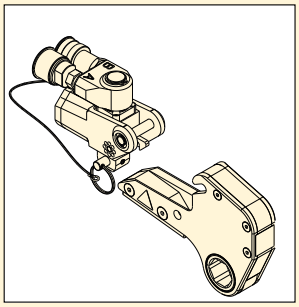

HMT...HLP

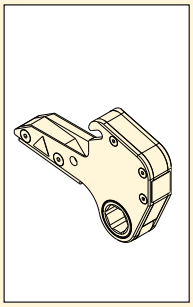

HLP

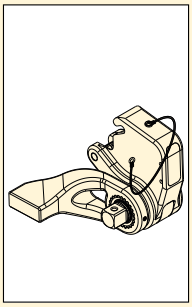

HSQ

HMT Series



Maximum Torque at 10.000 psi:
1541 - 13.489 Ft.lbs

Maximum Torque at 690 bar:
2089 - 18.289 Nm

Hexagon Range:
1 1/16 - 4 5/8" / 27 - 115 mm

Maximum Operating Pressure:
690 bar / 10.000 psi

HMT-Series, Torque Wrench Options and Accessories

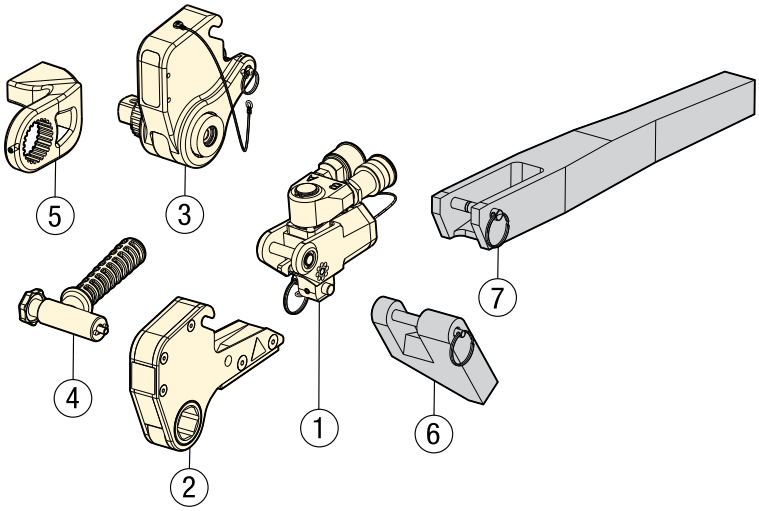

① **HMT**: Drive Unit (page 251)
② **HLP**: Hexagon Cassette (page 252-253)
③ **HSQ**: Square Drive Cassette (page 254-255)
④ **SWH**: Ergonomic Tool Handle (page 254)
⑤ Reaction Arm for HSQ

Optional Parts (for HMT with HLP only)
⑥ **HRP**: Reaction Paddle (page 252)
⑦ **HTE**: Extended Reaction Arm (page 252)

Select the Right Torque

250%

Choose your Enerpac Torque Wrench using the untightening rule of thumb: Loosening torque equals about 250% of tightening torque.



HLP-Low Profile Cassettes

For the metric and imperial Low Profile hexagon cassettes see:

Page: 252



HSQ-Square Drive Cassettes

For the metric and inch Square Drive Cassettes see:

Page: 254

▼ SELECTION CHART DRIVE UNITS FOR HEXAGON & SQUARE DRIVE CASSETTES

Maximum Torque Output at 690 bar		Minimum Torque Output at 69 bar		Drive Unit Model Number	Dimensions (inch)				Dimensions (mm)			
(Ft.lbs)	(Nm)	(Ft.lbs)	(Nm)		A	B	C	(lbs)	A	B	C	(kg)
1541	2089	154	209	**HMT1500**	4.3	4.1	2.0	2.20	108	104	49	1,0
3750	5084	375	508	**HMT3500**	5.7	5.2	2.6	3.97	146	132	66	1,8
7562	10.252	756	1025	**HMT7500**	7.1	6.4	3.2	7.05	180	163	82	3,2
13.489	18.289	1349	1829	**HMT13000 ***	8.5	7.4	3.9	4.40	216	187	98	9,7

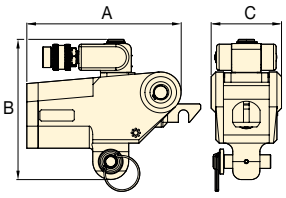

* Note: HMT13000 only available for HLP-low profile hexagon cassettes.

Tel: +45 63 12 83 00 | Email: ps@hymatik.com | www.hymatik.com | Hvidkaervej 27a, DK-5250 Odense SV, Denmark

Hexagon Cassettes for HMT-Drive Units

ENERPAC

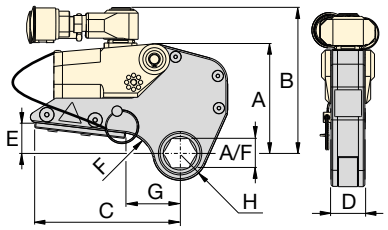

Hexagon Range:
1 1/16 - 4 5/8 inch

Hexagon Range:
27 - 115 mm

Maximum Operating Pressure:
690 bar / 10.000 psi

HLP Series



▼ SELECTION CHART

IMPORTANT: HMT-drive units must be ordered separately to operate the HLP-Hexagon Cassettes.

Drive Unit Model Number	Hexagon Size A/F		Hexagon Cassette Model Number	Maximum Torque		Dimensions (inch)									Dimensions (mm)								
	(inch)	(mm)		(Ft.lbs)	(Nm)	A	B	C	D	E	F	G	H	(lbs)	A	B	C	D	E	F	G	H	(kg)
HMT1500	1 1/16	27	HLP1101	1541	2089	4.48	5.32	5.35	1.2	1.13	1.18	2.01	1.00	3.53	114	135	136	31,5	29	30	51	25	1,6
	1 1/8	-	HLP1102	1541	2089	4.48	5.32	5.35	1.2	1.13	1.18	2.01	1.00	3.53	114	135	136	31,5	29	30	51	25	1,6
	1 3/16	30	HLP1103	1541	2089	4.48	5.32	5.35	1.2	1.13	1.18	2.01	1.00	3.53	114	135	136	31,5	29	30	51	25	1,6
	1 1/4	32	HLP1104	1541	2089	4.48	5.32	5.35	1.2	1.13	0.95	2.01	1.08	3.53	114	135	136	31,5	29	24	51	27	1,6
	1 5/16	33	HLP1105	1541	2089	4.48	5.32	5.35	1.2	1.13	0.95	2.01	1.08	3.53	114	135	136	31,5	29	24	51	27	1,6
	1 3/8	35	HLP1106	1541	2089	4.48	5.32	5.35	1.2	1.13	0.55	1.89	1.19	3.53	114	135	136	31,5	29	14	48	30	1,6
	1 7/16	36	HLP1107	1541	2089	4.48	5.32	5.35	1.2	1.13	0.55	1.89	1.19	3.53	114	135	136	31,5	29	14	48	30	1,6
	1 1/2	38	HLP1108	1541	2089	4.48	5.32	5.35	1.2	1.13	0.55	2.01	1.30	3.53	114	135	136	31,5	29	14	51	33	1,6
	1 9/16	-	HLP1109	1541	2089	4.48	5.32	5.35	1.2	1.13	0.55	2.01	1.30	3.53	114	135	136	31,5	29	14	51	33	1,6
	1 5/8	41	HLP1110	1541	2089	4.48	5.32	5.35	1.2	1.13	0.55	2.01	1.30	3.53	114	135	136	31,5	29	14	51	33	1,6
	1 11/16	-	HLP1111	1541	2089	4.48	5.32	5.35	1.2	1.13	0.55	2.01	1.30	3.53	114	135	136	31,5	29	14	51	33	1,6
	1 3/4	-	HLP1112	1541	2089	4.48	5.32	5.35	1.2	1.13	0.55	2.01	1.38	3.53	114	135	136	31,5	29	14	51	35	1,6
	1 13/16	46	HLP1113	1541	2089	4.48	5.32	5.35	1.2	1.13	0.55	2.01	1.38	3.53	114	135	136	31,5	29	14	51	35	1,6
	1 7/8	-	HLP1114	1541	2089	4.48	5.32	5.35	1.2	1.13	0.55	2.36	1.52	3.53	114	135	136	31,5	29	14	60	39	1,6
	1 15/16	-	HLP1115	1541	2089	4.48	5.32	5.35	1.2	1.13	0.55	2.36	1.52	3.53	114	135	136	31,5	29	14	60	39	1,6
	2	50	HLP1200	1541	2089	4.48	5.32	5.35	1.2	1.13	0.55	2.36	1.52	3.75	114	135	136	31,5	29	14	60	39	1,7
	2 1/16	-	HLP1201	1541	2089	4.48	5.32	5.35	1.2	1.13	0.55	2.36	1.52	3.75	114	135	136	31,5	29	14	60	39	1,7
	2 1/8	-	HLP1202	1541	2089	4.48	5.32	5.35	1.2	1.13	0.55	2.36	1.65	3.75	114	135	136	31,5	29	14	60	42	1,7
	2 3/16	55	HLP1203	1541	2089	4.48	5.32	5.35	1.2	1.13	0.55	2.36	1.65	3.75	114	135	136	31,5	29	14	60	42	1,7
	2 1/4	-	HLP1204	1541	2089	4.48	5.32	5.35	1.2	1.13	0.55	2.36	1.65	3.75	114	135	136	31,5	29	14	60	42	1,7
	2 5/16	-	HLP1205	1541	2089	4.48	5.32	5.35	1.2	1.13	0.55	2.36	1.65	3.75	114	135	136	31,5	29	14	60	42	1,7
	2 3/8	60	HLP1206	1541	2089	4.48	5.32	5.35	1.2	1.13	0.55	2.36	1.71	3.75	114	135	136	31,5	29	14	60	44	1,7
	2 7/16	62	HLP1207	1541	2089	4.48	5.32	5.35	1.2	1.13	0.55	2.36	1.71	3.75	114	135	136	31,5	29	14	60	44	1,7
HMT3500	1 3/8	35	HLP3106	3750	5084	6.02	6.57	7.24	1.7	1.59	1.89	3.09	1.30	8.60	153	167	184	42,0	41	48	79	33	3,9
	1 7/16	36	HLP3107	3750	5084	6.02	6.57	7.24	1.7	1.59	1.89	3.09	1.30	8.60	153	167	184	42,0	41	48	79	33	3,9
	1 1/2	38	HLP3108	3750	5084	6.02	6.57	7.24	1.7	1.59	1.81	3.16	1.42	8.60	153	167	184	42,0	41	46	80	36	3,9
	1 9/16	-	HLP3109	3750	5084	6.02	6.57	7.24	1.7	1.59	1.81	3.16	1.42	8.60	153	167	184	42,0	41	46	80	36	3,9
	1 5/8	41	HLP3110	3750	5084	6.02	6.57	7.24	1.7	1.59	1.81	3.16	1.42	8.60	153	167	184	42,0	41	46	80	36	3,9
	1 11/16	-	HLP3111	3750	5084	6.02	6.57	7.24	1.7	1.59	1.81	3.16	1.42	8.60	153	167	184	42,0	41	46	80	36	3,9
	1 3/4	-	HLP3112	3750	5084	6.02	6.57	7.24	1.7	1.59	1.58	3.08	1.52	8.60	153	167	184	42,0	41	40	78	39	3,9
	1 13/16	46	HLP3113	3750	5084	6.02	6.57	7.24	1.7	1.59	1.58	3.08	1.52	8.60	153	167	184	42,0	41	40	78	39	3,9
	1 7/8	-	HLP3114	3750	5084	6.02	6.57	7.24	1.7	1.59	1.42	3.05	1.63	8.60	153	167	184	42,0	41	36	77	41	3,9
	1 15/16	-	HLP3115	3750	5084	6.02	6.57	7.24	1.7	1.59	1.42	3.05	1.63	8.60	153	167	184	42,0	41	36	77	41	3,9
	2	50	HLP3200	3750	5084	6.02	6.57	7.24	1.7	1.59	1.42	3.05	1.63	8.60	153	167	184	42,0	41	36	77	41	3,9
	2 1/16	-	HLP3201	3750	5084	6.02	6.57	7.24	1.7	1.59	1.42	3.05	1.63	8.82	153	167	184	42,0	41	36	77	41	4,0
	2 1/8	-	HLP3202	3750	5084	6.02	6.57	7.24	1.7	1.59	1.18	2.97	1.74	8.82	153	167	184	42,0	41	30	75	44	4,0
	2 3/16	55	HLP3203	3750	5084	6.02	6.57	7.24	1.7	1.59	1.18	2.97	1.74	8.82	153	167	184	42,0	41	30	75	44	4,0
	2 1/4	-	HLP3204	3750	5084	6.02	6.57	7.24	1.7	1.59	1.18	2.97	1.74	8.82	153	167	184	42,0	41	30	75	44	4,0
	2 5/16	-	HLP3205	3750	5084	6.02	6.57	7.24	1.7	1.59	0.63	2.68	1.85	9.04	153	167	184	42,0	41	16	68	47	4,1
	2 3/8	60	HLP3206	3750	5084	6.02	6.57	7.24	1.7	1.59	0.63	2.68	1.85	9.04	153	167	184	42,0	41	16	68	47	4,1
	2 7/16	62	HLP3207	3750	5084	6.02	6.57	7.24	1.7	1.59	0.63	2.80	1.85	9.04	153	167	184	42,0	41	16	71	47	4,1
	2 1/2	63	HLP3208	3750	5084	6.02	6.57	7.24	1.7	1.59	0.63	2.80	1.96	9.04	153	167	184	42,0	41	16	71	50	4,1
	2 9/16	65	HLP3209	3750	5084	6.02	6.57	7.24	1.7	1.59	0.63	2.80	1.96	9.04	153	167	184	42,0	41	16	71	50	4,1
	2 5/8	-	HLP3210	3750	5084	6.02	6.57	7.24	1.7	1.59	0.63	2.80	2.07	9.04	153	167	184	42,0	41	16	71	53	4,1
	2 11/16	-	HLP3211	3750	5084	6.02	6.57	7.24	1.7	1.59	0.63	2.80	2.07	9.04	153	167	184	42,0	41	16	71	53	4,1
	2 3/4	70	HLP3212	3750	5084	6.02	6.57	7.24	1.7	1.59	0.63	2.80	2.07	9.04	153	167	184	42,0	41	16	71	53	4,1
	2 13/16	-	HLP3213	3750	5084	6.02	6.57	7.24	1.7	1.59	0.63	2.80	2.07	9.04	153	167	184	42,0	41	16	71	53	4,1
	2 7/8	-	HLP3214	3750	5084	6.02	6.57	7.24	1.7	1.59	0.63	2.80	2.07	9.04	153	167	184	42,0	41	16	71	53	4,1
	2 15/16	75	HLP3215	3750	5084	6.02	6.57	7.24	1.7	1.59	0.63	2.99	2.19	9.04	153	167	184	42,0	41	16	76	56	4,1
	3	-	HLP3300	3750	5084	6.02	6.57	7.24	1.7	1.59	0.63	2.99	2.19	9.04	153	167	184	42,0	41	16	76	56	4,1
	3 1/16	-	HLP3301	3750	5084	6.02	6.57	7.24	1.7	1.59	0.63	2.99	2.19	9.04	153	167	184	42,0	41	16	76	56	4,1
	3 1/8	80	HLP3302	3750	5084	6.02	6.57	7.24	1.7	1.59	0.63	2.99	2.19	9.04	153	167	184	42,0	41	16	76	56	4,1

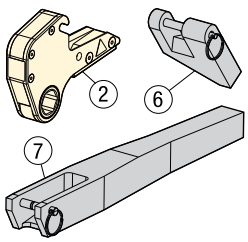

Optional Parts for HLP-Hexagon Cassettes

- Full torque rated
- Includes pin to secure onto HLP-cassette
- ⑥ HRP: allows offset reaction when in-line reaction point is not available
- ⑦ HTE: Increases tool fit in restricted areas.

For HMT with HLP-Series Hexagon Cassettes	Reaction Paddle Model Nr. ⑥	Extended Reaction Arm Model Nr. ⑦
HMT1500 + HLP1	**HRP15**	**HTE15**
HMT3500 + HLP3	**HRP35**	**HTE35**
HMT7500 + HLP7	**HRP75**	**HTE75**
HMT13000 + HLP13	**HRP130**	**HTE130**

Hexagon Cassettes for HMT-Drive Units

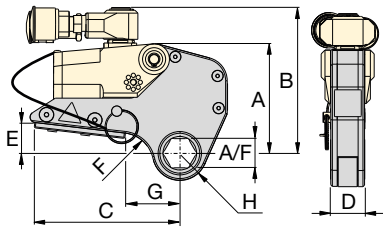

Hexagon Range:
1 1/16 - 4 5/8 inch

Hexagon Range:
27 - 115 mm

Maximum Operating Pressure:
690 bar / 10.000 psi

HLP Series



▼ SELECTION CHART

IMPORTANT: HMT-drive units must be ordered separately to operate the HLP-Hexagon Cassettes.

Drive Unit Model Number	Hexagon Size A/F		Hexagon Cassette Model Number	Maximum Torque		Dimensions (inch)									Dimensions (mm)								
	(inch)	(mm)		(Ft.lbs)	(Nm)	A	B	C	D	E	F	G	H	(lbs)	A	B	C	D	E	F	G	H	(kg)
HMT7500	2 3/16	55	HLP7203	7562	10.252	7.60	8.01	8.94	2.1	1.81	1.65	3.39	1.91	15.65	193	203	227	52,6	46	42	86	49	7,1
	2 1/4	-	HLP7204	7562	10.252	7.60	8.01	8.94	2.1	1.81	1.65	3.39	1.91	15.65	193	203	227	52,6	46	42	86	49	7,1
	2 5/16	-	HLP7205	7562	10.252	7.60	8.01	8.94	2.1	1.81	1.65	3.39	1.91	15.65	193	203	227	52,6	46	42	86	49	7,1
	2 3/8	60	HLP7206	7562	10.252	7.60	8.01	8.94	2.1	1.81	1.18	3.15	1.99	15.65	193	203	227	52,6	46	30	80	51	7,1
	2 7/16	62	HLP7207	7562	10.252	7.60	8.01	8.94	2.1	1.81	1.18	3.15	1.99	15.65	193	203	227	52,6	46	30	80	51	7,1
	2 1/2	63	HLP7208	7562	10.252	7.60	8.01	8.94	2.1	1.81	1.18	3.15	1.99	15.65	193	203	227	52,6	46	30	80	51	7,1
	2 9/16	65	HLP7209	7562	10.252	7.60	8.01	8.94	2.1	1.81	0.87	3.15	2.07	15.65	193	203	227	52,6	46	22	80	53	7,1
	2 5/8	-	HLP7210	7562	10.252	7.60	8.01	8.94	2.1	1.81	0.79	3.15	2.19	15.65	193	203	227	52,6	46	20	80	56	7,1
	2 11/16	-	HLP7211	7562	10.252	7.60	8.01	8.94	2.1	1.81	0.79	3.15	2.19	15.65	193	203	227	52,6	46	20	80	56	7,1
	2 3/4	70	HLP7212	7562	10.252	7.60	8.01	8.94	2.1	1.81	0.79	3.15	2.19	17.42	193	203	227	52,6	46	20	80	56	7,9
	2 13/16	-	HLP7213	7562	10.252	7.60	8.01	8.94	2.1	1.81	0.79	3.15	2.19	17.42	193	203	227	52,6	46	20	80	56	7,9
	2 7/8	-	HLP7214	7562	10.252	7.60	8.01	8.94	2.1	1.81	0.79	3.15	2.19	17.42	193	203	227	52,6	46	20	80	56	7,9
	2 15/16	75	HLP7215	7562	10.252	7.60	8.01	8.94	2.1	1.81	0.67	3.15	2.26	17.42	193	203	227	52,6	46	17	80	58	7,9
	3	-	HLP7300	7562	10.252	7.60	8.01	8.94	2.1	1.81	0.67	3.39	2.38	17.42	193	203	227	52,6	46	17	86	61	7,9
	3 1/16	-	HLP7301	7562	10.252	7.60	8.01	8.94	2.1	1.81	0.67	3.39	2.38	17.42	193	203	227	52,6	46	17	86	61	7,9
	3 1/8	80	HLP7302	7562	10.252	7.60	8.01	8.94	2.1	1.81	0.67	3.39	2.38	17.42	193	203	227	52,6	46	17	86	61	7,9
	3 1/4	-	HLP7304	7562	10.252	7.60	8.01	8.94	2.1	1.81	0.67	3.39	2.52	17.42	193	203	227	52,6	46	17	86	64	7,9
	-	85	HLP7085M	7562	10.252	7.60	8.01	8.94	2.1	1.81	0.67	3.39	2.52	17.42	193	203	227	52,6	46	17	86	64	7,9
	3 3/8	-	HLP7306	7562	10.252	7.60	8.01	8.94	2.1	1.81	0.67	3.39	2.52	17.42	193	203	227	52,6	46	17	86	64	7,9
	3 7/16	-	HLP7307	7562	10.252	7.60	8.01	8.94	2.1	1.81	0.67	3.50	2.52	17.64	193	203	227	52,6	46	17	89	64	8,0
	3 1/2	-	HLP7308	7562	10.252	7.60	8.01	8.94	2.1	1.81	0.67	3.50	2.64	17.64	193	203	227	52,6	46	17	89	67	8,0
	-	90	HLP7090M	7562	10.252	7.60	8.01	8.94	2.1	1.81	0.67	3.74	2.64	17.64	193	203	227	52,6	46	17	95	67	8,0
	3 9/16	-	HLP7309	7562	10.252	7.60	8.01	8.94	2.1	1.81	0.67	3.74	2.78	17.64	193	203	227	52,6	46	17	95	71	8,0
	3 3/4	95	HLP7312	7562	10.252	7.60	8.01	8.94	2.1	1.81	0.67	3.74	2.89	18.08	193	203	227	52,6	46	17	95	71	8.2
	3 7/8	-	HLP7314	7562	10.252	7.60	8.01	8.94	2.1	1.81	0.67	3.74	2.89	18.08	193	203	227	52,6	46	17	95	74	8.2
	3 15/16	100	HLP7315	7562	10.252	7.60	8.01	8.94	2.1	1.81	0.67	3.74	2.89	18.08	193	203	227	52,6	46	17	95	74	8,2
HMT13000	2 7/16	62	HLP13207	13.489	18.289	8.03	9.53	10.87	2.50	2.25	2.95	4.69	2.28	24.3	204	242	276	63,4	57	75	119	58,0	11,0
	2 1/2	63	HLP13208	13.489	18.289	8.03	9.53	10.87	2.50	2.25	2.95	4.69	2.28	24.3	204	242	276	63,4	57	75	119	58,0	11,0
	2 9/16	65	HLP13209	13.489	18.289	8.03	9.53	10.87	2.50	2.25	2.95	4.69	2.28	24.3	204	242	276	63,4	57	75	119	58,0	11,0
	2 5/8	67	HLP13210	13.489	18.289	8.03	9.53	10.87	2.50	2.25	2.95	4.69	2.28	24.3	204	242	276	63,4	57	75	119	58,0	11,0
	2 11/16	68	HLP13211	13.489	18.289	8.03	9.53	10.87	2.50	2.25	2.95	4.69	2.28	24.3	204	242	276	63,4	57	75	119	58,0	11,0
	2 3/4	70	HLP13212	13.489	18.289	8.03	9.53	10.87	2.50	2.25	2.95	4.69	2.28	24.3	204	242	276	63,4	57	75	119	58,0	11,0
	2 13/16	71	HLP13213	13.489	18.289	8.03	9.53	10.87	2.50	2.25	2.95	4.69	2.28	24.3	204	242	276	63,4	57	75	119	58,0	11,0
	2 7/8	73	HLP13214	13.489	18.289	8.03	9.53	10.87	2.50	2.25	2.95	4.69	2.28	24.3	204	242	276	63,4	57	75	119	58,0	11,0
	2 15/16	75	HLP13215	13.489	18.289	8.03	9.53	10.87	2.50	2.25	2.76	4.69	2.40	24.3	204	242	276	63,4	57	70	119	61,0	11,0
	3	77	HLP13300	13.489	18.289	8.03	9.53	10.87	2.50	2.25	2.76	4.88	2.56	24.3	204	242	276	63,4	57	70	124	65,0	11,0
	3 1/16	78	HLP13301	13.489	18.289	8.03	9.53	10.87	2.50	2.25	2.76	4.88	2.56	24.3	204	242	276	63,4	57	70	124	65,0	11,0
	3 1/8	80	HLP13302	13.489	18.289	8.03	9.53	10.87	2.50	2.25	2.76	4.88	2.56	24.3	204	242	276	63,4	57	70	124	65,0	11,0
	3 3/16	81	HLP13303	13.489	18.289	8.03	9.53	10.87	2.50	2.25	2.76	4.88	2.58	24.3	204	242	276	63,4	57	70	124	65,5	11,0
	3 1/4	83	HLP13304	13.489	18.289	8.03	9.53	10.87	2.50	2.25	2.76	4.88	2.58	24.3	204	242	276	63,4	57	70	124	65,5	11,0
	3 5/16	84	HLP13305	13.489	18.289	8.03	9.53	10.87	2.50	2.25	2.76	4.88	2.58	24.3	204	242	276	63,4	57	70	124	65,5	11,0
	–	85	HLP13085M	13.489	18.289	8.03	9.53	10.87	2.50	2.25	2.76	4.88	2.58	24.3	204	242	276	63,4	57	70	124	65,5	11,0
	3 3/8	86	HLP13306	13.489	18.289	8.03	9.53	10.87	2.50	2.25	2.76	4.88	2.58	24.3	204	242	276	63,4	57	70	124	65,5	11,0
	3 7/16	–	HLP13307	13.489	18.289	8.03	9.53	10.87	2.50	2.25	2.36	4.88	2.76	24.3	204	242	276	63,4	57	60	124	70,0	11,0
	3 1/2	89	HLP13308	13.489	18.289	8.03	9.53	10.87	2.50	2.25	2.36	4.88	2.76	24.3	204	242	276	63,4	57	60	124	70,0	11,0
	–	90	HLP13090M	13.489	18.289	8.03	9.53	10.87	2.50	2.25	2.36	4.88	2.76	26.5	204	242	276	63,4	57	60	124	70,0	12,0
	3 9/16	91	HLP13309	13.489	18.289	8.03	9.53	10.87	2.50	2.25	1.34	4.33	2.91	26.5	204	242	276	63,4	57	34	110	74,0	12,0
	3 5/8	92	HLP13310	13.489	18.289	8.03	9.53	10.87	2.50	2.25	1.34	4.33	2.91	26.5	204	242	276	63,4	57	34	110	74,0	12,0
	3 11/16	94	HLP13311	13.489	18.289	8.03	9.53	10.87	2.50	2.25	1.34	4.33	2.91	26.5	204	242	276	63,4	57	34	110	74,0	12,0
	3 3/4	95	HLP13312	13.489	18.289	8.03	9.53	10.87	2.50	2.25	1.34	4.33	2.91	26.5	204	242	276	63,4	57	34	110	74,0	12,0
	3 13/16	97	HLP13313	13.489	18.289	8.03	9.53	10.87	2.50	2.25	1.73	4.69	2.95	26.5	204	242	276	63,4	57	44	119	75,0	12,0
	3 7/8	99	HLP13314	13.489	18.289	8.03	9.53	10.87	2.50	2.25	1.73	4.69	2.95	26.5	204	242	276	63,4	57	44	119	75,0	12,0
	3 15/16	100	HLP13315	13.489	18.289	8.03	9.53	10.87	2.50	2.25	1.73	4.69	2.95	26.5	204	242	276	63,4	57	44	119	75,0	12,0
	4	102	HLP13400	13.489	18.289	8.03	9.53	10.87	2.50	2.25	1.73	4.88	3.11	26.5	204	242	276	63,4	57	44	124	79,0	12,0
	4 1/16	–	HLP13401	13.489	18.289	8.03	9.53	10.87	2.50	2.25	1.73	4.88	3.11	26.5	204	242	276	63,4	57	44	124	79,0	12,0
	4 1/8	105	HLP13402	13.489	18.289	8.03	9.53	10.87	2.50	2.25	1.73	4.88	3.11	26.5	204	242	276	63,4	57	44	124	79,0	12,0
	4 3/16	–	HLP13403	13.489	18.289	8.03	9.53	10.87	2.50	2.25	0.95	4.33	3.21	28.7	204	242	276	63,4	57	24	110	81,5	13,0
	4 1/4	108	HLP13404	13.489	18.289	8.03	9.53	10.87	2.50	2.25	0.95	4.33	3.21	28.7	204	242	276	63,4	57	24	110	81,5	13,0
	4 5/16	110	HLP13405	13.489	18.289	8.03	9.53	10.87	2.50	2.25	0.95	4.33	3.21	28.7	204	242	276	63,4	57	24	110	81,5	13,0
	4 3/8	111	HLP13406	13.489	18.289	8.03	9.53	10.87	2.50	2.25	0.95	4.69	3.45	28.7	204	242	276	63,4	57	24	119	87,5	13,0
	4 7/16	113	HLP13407	13.489	18.289	8.03	9.53	10.87	2.50	2.25	0.95	4.69	3.45	28.7	204	242	276	63,4	57	24	119	87,5	13,0
	4 1/2	–	HLP13408	13.489	18.289	8.03	9.53	10.87	2.50	2.25	0.95	4.69	3.45	28.7	204	242	276	63,4	57	24	119	87,5	13,0
	4 9/16	–	HLP13409	13.489	18.289	8.03	9.53	10.87	2.50	2.25	0.95	4.69	3.45	28.7	204	242	276	63,4	57	24	119	87,5	13,0
	–	115	HLP13115M	13.489	18.289	8.03	9.53	10.87	2.50	2.25	0.95	4.69	3.45	28.7	204	242	276	63,4	57	24	119	87,5	13,0
	4 5/8	–	HLP13410	13.489	18.289	8.03	9.53	10.87	2.50	2.25	0.95	4.69	3.45	28.7	204	242	276	63,4	57	24	119	87,5	13,0

Tel: +45 63 12 83 00 | Email: ps@hymatik.com | www.hymatik.com | Hvidkaervej 27a, DK-5250 Odense SV, Denmark

HSQ-Square Drive Hydraulic Torque Wrenches

ENERPAC

▼ HMT drive unit with HSQ square drive cassette



Modular, Durable, Fast and Efficient Torque for Low Profile and Square Drive Applications

Safety and Performance

- Innovative design that completely encloses all moving parts and minimizes pinch points
- Supplied reaction arm as standard
- Fully adjustable 360 degree in-line reaction arm
- Fine tooth rachet prevents locking-on.

Simplicity

- Simple robust design with just three moving parts for reduced maintenance
- Push button, quick release, reversible square drive.

Versatility

- The reaction arm, positioned around the square drive instead of the back of the drive unit, provides you with the possibility to turn the drive unit away from an obstacle.

Accuracy

- Constant torque output provides accuracy of ± 3% across the full stroke.



Ergonomic Tool Handle

Robust ergonomic positioning handle comes standard with every HMT Drive Unit.

Compatible HMT-Series drive units	Ergonomic Handle (Standard)
HMT1500, 3500, 7500	**SWH6A**
HMT13000	**SWH10A**



BUS-Series, Back-Up Spanners

To be used to stop the back nut from turning during make up or break out. Two hexagon sizes in one tool.

Page: 217



Torque Wrench Hoses

Use Enerpac THQ-Series hoses with HMT-Series torque wrenches to ensure the integrity of your hydraulic system.

2 m long, 2 hoses	**THQ702T**
6 m long, 2 hoses	**THQ706T**
12 m long, 2 hoses	**THQ712T**

HSQ, Square Drive Hydraulic Torque Wrenches

Bolting Integrity Software

Visit enerpac.com to access our free on-line bolting software application. A comprehensive free online software solution for Bolted Joint Integrity.

Integral databases hold data for:
- BS1560, MSS SP44, API 6A and 17D flanged joints
- Common gasket materials and configurations
- Comprehensive range of bolt materials
- Comprehensive range of lubricants
- Enerpac's Controlled Bolting Equipment including: Torque Multipliers, Hydraulic Wrenches and Bolt Tensioning tools.

Custom Joint information can also be entered

The software offers Tool selection, Bolt Load calculations and Tool pressure settings, as well as a combined Application data sheet and Joint completion report.

Page: 412

HSQ Series



Maximum Torque at 10.000 psi:
1541 - 7562 Ft.lbs

Maximum Torque at 690 bar:
2089 - 10.252 Nm

Square Drive Range:
¾ - 1½ inch

Maximum Operating Pressure:
690 bar / 10.000 psi

TORQUE WRENCH SELECTION (based on sockets)

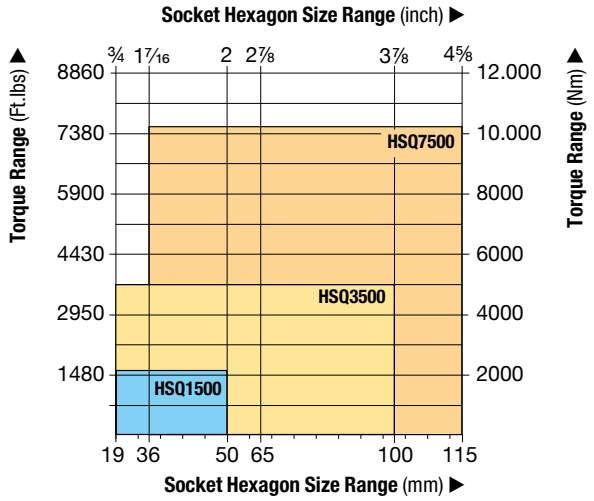



BSH-Series Sockets

Heavy-Duty Impact Sockets for power driven torqueing equipment.

Page: 216



Select the Right Torque

Choose your Enerpac Torque Wrench using the untightening rule of thumb: Loosening torque equals about 250% of tightening torque.



Torque Pumps

Visit enerpac.com for system matched air and electric torque wrench pumps that are ideal for use with hydraulic torque wrenches.

Page: 265

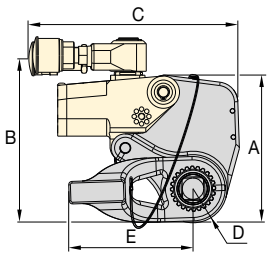

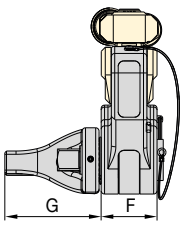

▼ SELECTION CHART

Maximum Torque Output (Ft.lbs)	Maximum Torque Output (Nm)	Square Drive Size (inch)	Square Drive Cassette * Model Number	Dimensions (inch) A	B	C	D	E	F	G	(lbs)	Dimensions (mm) A	B	C	D	E	F	G	(kg)
1541	2089	¾	**HSQ1500**	5.71	6.61	6.85	1.19	2.36	1.95	3.29	8.16	145	168	174	30	60	50	84	3,7
3750	5084	**1**	**HSQ3500**	7.54	8.23	7.95	1.52	3.07	2.58	4.35	13.01	192	209	202	39	78	66	111	5,9
7562	10.252	**1½**	**HSQ7500**	9.60	10.08	9.25	1.99	4.33	3.23	6.32	25.13	244	256	235	51	110	82	161	11,4

* **IMPORTANT**: HMT-drive units must be ordered separately to operate the HSQ-Square Drive Cassettes.

Tel: +45 63 12 83 00 | Email: ps@hymatik.com | www.hymatik.com | Hvidkaervej 27a, DK-5250 Odense SV, Denmark

E-Series, Manual Torque Multipliers

ENERPAC

▼ Shown from left to right: **E291, E393, E494**



- **High-efficiency planetary gear sets achieve high output torque from low input torque**
- **Operator protected by anti-backlash device**
- **Reversible, tighten or loosen bolts**
- **Reaction bar or reaction plate style**
- **Angle-of-turn protractor standard on E300-Series models**
- **Reaction plate models offer increased versatility with reaction point locations**
- **E300 and E400-Series have replaceable shear drives, providing overload protection of internal power train**
- **One replacement shear drive is included with each E300 and E400-Series models.**

Accurate, Efficient Torque Multiplication

When accurate make-up or break-out of stubborn fasteners requires high torque

Typical Torque Multiplier Applications

- Locomotives
- Power plants
- Pulp and paper mills
- Refineries
- Chemical plants
- Mining and construction
- Off-road equipment
- Shipyards
- Cranes.



BUS-Series, Back-Up Spanners

To be used to stop the back nut from turning during make up or break out. Two hexagon sizes in one tool.

Page: 217

▼ **SELECTION CHART**

Torque Multiplier Type	Nominal Torque Output (Nm)	Nominal Torque Output (Ft.lbs)	Model Number
Reaction Bar Multiplier	1020	750	**E290PLUS**
	1358	1000	**E291**
	1627	1200	**E391**
	2983	2200	**E392**
	4340	3200	**E393**
Reaction Plate Multiplier	2983	2200	**E492**
	4339	3200	**E493**
	6779	5000	**E494**
	10.846	8000	**E495**



◀ *Enerpac Reaction Bar Torque Multiplier E393 used to manually torque bolts up to 4300 Nm.*

Manual Torque Multipliers

Manual Torque Multipliers

Enerpac manual torque multipliers provide efficient torque multiplication in wide clearance applications and when external power sources are not available.

Manual torque multipliers are used in most industrial, construction, and equipment maintenance applications. Hydraulic torque wrenches are better suited for tight tolerance, flange and repetitious bolting applications.

Use Reaction Bar Models:

- Where space is limited,
- Where multiple reaction points are available,
- when portability is desirable.

Use Reaction Plate Models:

- Above 4300 Nm output torque,
- On flanges and applications where neighbouring bolt or nut is available to react against
- When extreme reaction forces are generated.

E Series



Nominal Torque Output:
1020 - 10.846 Nm

Torque Ratio:
3:1 - 52:1

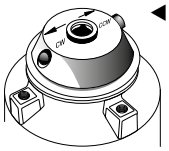

◀ **Selector Pawl**

Models with anti-backlash protection have directional selector pawls. Set the pawl for clockwise or counter-clockwise rotation.

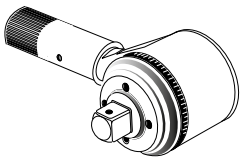

▲ **Angle-of-Turn Protractor**

E391, E392 and E393 models include an angle-of-turn protractor (scale) to tighten fasteners using a "torque turn" method. Allows accurate measuring a specific number of degrees of rotation.

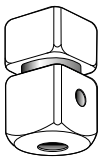

◀ **Shearable Square Drive**

Provides overload protection on E300- and E400-series multiplier's power train by shearing when the rated capacity of the tool is exceeded. Internal shear pin prevents tool from falling off bolt.

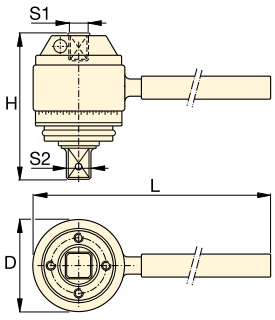

Reaction Bar Type [1]

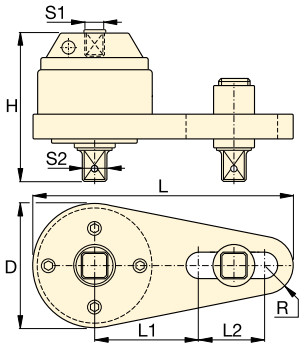

Reaction Plate Type [1]

CAUTION!

Never use impact air tools for power driving torque multipliers. Torque multiplier drive train damage will occur.



Hydraulic Torque Wrenches

Enerpac offers a complete range of square drive and hexagon cassette torque wrenches.

Page: 211



BSH-Series Sockets

Heavy-Duty Impact Sockets for power driven torqueing equipment.

Page: 216

Input Torque [2] (Nm)	Input Torque [2] (Ft.lbs)	Torque Ratio (estimate)	Input Female Square Drive S1 (inch)	Output Male Square Drive S2 (inch)	Output Male Square Drive Replaceable Shear Drive Model Nr.	Over-load protection	Anti-Backlash	Dimensions (mm) D	H	L	L1	L2	R	(kg)	Model Number
339	250	3 : 1	½	¾	–	No	No	71	83	217	–	–	–	1,8	**E290PLUS**
452	333	3 : 1	½	¾	–	No	No	71	83	443	–	–	–	2,5	**E291**
271	200	6 : 1	½	¾	E391SDK	Yes	No	100	102	497	–	–	–	4,1	**E391**
220	162	13,6 : 1	½	1	E392SDK	Yes	Yes	103	146	497	–	–	–	6,9	**E392**
235	173	18,5 : 1	½	1	E393SDK	Yes	Yes	103	165	497	–	–	–	8,3	**E393**
219	162	13,6 : 1	½	1	E392SDK	Yes	Yes	124	140	356	140	124	32	7,8	**E492**
234	173	18,5 : 1	½	1	E393SDK	Yes	Yes	124	163	356	140	124	32	8,9	**E493**
256	189	26,5 : 1	½	1½	E494SDK	Yes	Yes	143	222	378	178	89	42	15,4	**E494**
209	154	52 : 1	½	1½	E495SDK	Yes	Yes	148	273	387	178	89	48	22,8	**E495**

[1] E200 and E400-series do not have an Angle-of-Turn Protractor (scale).
[2] User must verify manual torque wrench accuracy prior to use to ensure accurate final output torque.

PTW-Series, Pneumatic Torque Wrenches

ENERPAC

▼ PTW1000



Continuous Rotation Controlled Torque

Calibration Certificate
All PTW-Series tools are CE declared and are shipped complete with a calibration certificate.

CE



FRL120C, Filter-Regulator-Lubricator with air hose
All PTW-Series tools are shipped complete with standard reaction arm, and Filter-Regulator-Lubricator (FRL120C).



MCS-Series, Mobile Calibration System
To check torque accuracy, run calibration tests and create calibration certificates prior to the use of continuous rotation torque tools in various applications while on a job site.

Page: 264

Productivity

- **High speed continuous rotation for constant torque output**
- **Low friction planetary gearbox design minimizes wear and extends uptime.**

Safety

- **Ergonomic, low vibration design reduces fatigue and the risk of vibration related injuries for the operator**
- **Low noise air motor provides quiet, consistent performance for indoor and outdoor applications.**

Convenience

- **Provided with standard reaction arm; wide assortment of custom arms and accessories are available**
- **Available with or without Filter-Regulator-Lubricator (FRL)**
- **Unique calibration certificate provided with each tool.**



◀ *The PTW1000 makes quick work of this flange maintenance job.*

▼ *PTW-Series Pneumatic Torque Wrenches are ideal for applications where speed and precision are critical, such as track maintenance.*



Pneumatic Torque Wrenches

PTW-Series, Pneumatic Torque Wrenches

Enerpac PTW-Series Pneumatic Torque Wrenches are designed for applications that require speed and control.

The standard package includes a Torque Wrench with a calibration certificate, an FRL (Filter/Regulator/Lubricator), and a 3 m long, ½" inch (13 mm) diameter air hose, which connects the FRL to the wrench.

Once the air hoses are connected, the operator simply adjusts the air pressure on the FRL to achieve the desired torque using the calibration certificate. After this, the tool is ready to go to work! *

The air source used with the PTW system must be regulated and/or limited to 8,3 bar, and must be capable of providing a volume of at least (85 m^3/h) at 6,9 bar. A separate ½" inch hose (not included) must be used to connect the FRL to the air supply.

* See instruction manual for comprehensive instructions.

PTW Series



Nominal Torque Output:
8135 Nm

Square Drive Range:
¾ - 1 - 1½ inch

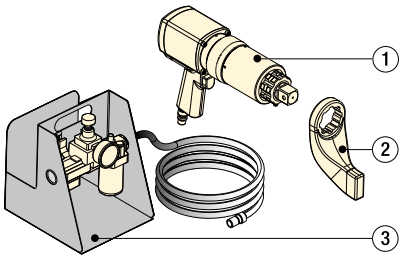

① PTW Torque Wrench
② Standard Reaction Arm
③ FRL120C Filter-Regulator-Lubricator with 3 meters air hose

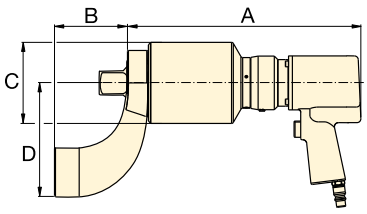

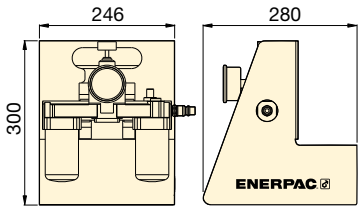



Accessories
Enerpac offers a full line of accessories including a range of reaction arms and drives.
Page: 260



BSH-Series Sockets
Heavy-Duty Impact Sockets for power driven torquing equipment.
Page: 216



Back-Up Spanners
Hands-free tool to be used to stop back nut from turning during make up or break out.
Page: 217

▼ SELECTION CHART

All tools are shipped complete with standard reaction arm and FRL120C.

Minimum Torque (Nm)	Minimum Torque (Ft.lbs)	Nominal Torque (Nm)	Nominal Torque (Ft.lbs)	Square Drive (inch)	Model Number [1] (FRL120C included)	Speed (RPM)	Dimensions (mm) A	B	C	D	(kg) [2]
407	300	1356	1000	¾	**PTW1000-75C**	12,6	272	83	72	130	7,9
407	300	1356	1000	1	**PTW1000C**	12,6	272	83	72	130	8,2
678	500	2712	2000	1	**PTW2000C**	8,0	286	83	79	133	8,8
1220	900	4067	3000	1	**PTW3000C**	3,1	343	83	95	133	10,4
1763	1300	8135	6000	1½	**PTW6000C**	2,5	366	114	127	178	17,7

[1] To order without FRL120C, remove "C" suffix from model number (example: **PTW3000**).
[2] Weight does not include reaction arm. Reaction arm weight for PTW1000, PTW2000, PTW3000 is 1,3 kg and for PTW6000 is 3,5 kg.

Accessories for PTW-Series Torque Wrenches ENERPAC

▼ Shown: **Accessories for PTW-Series Torque Wrenches**



- **Accessories for further extending the application range of pneumatic torque wrenches**
- **Extended drives increases tool fit in restricted access areas.**

PTW-Accessories

Enerpac offers the following accessories to support a wide variety of applications in industries such as mining, power generation and oil & gas.
For additional custom accessories not pictured here, please contact Enerpac.

Applications

PTW-Series Pneumatic Wrenches are designed for applications that require speed and control.

Mining
- Track maintenance
- Undercarriage maintenance
- Wheel maintenance
- Shovel maintenance

Power Generation
- Turbine bolts
- Tower segments
- Turbine casings

Oil & Gas
- Pipe flanges
- Valves
- Manway covers
- Pressure vessels

▼ *PTW-Wrenches are ideal for applications where speed and precision are critical, such as track or wheel maintenance.*





Accessories for PTW-Series Torque Wrenches

TORQUE WRENCH SELECTION (based on hexagon socket sizes)

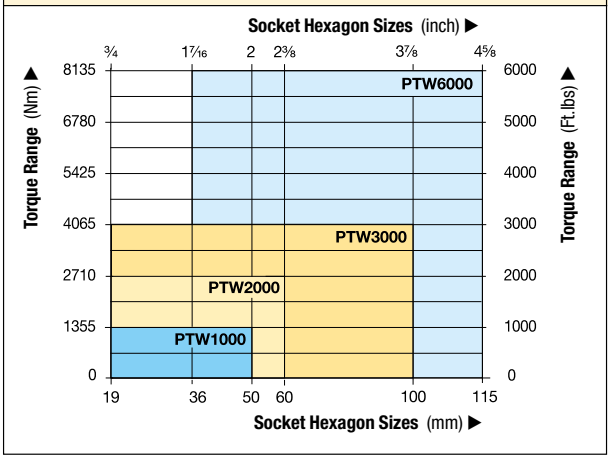

PTW Series



Nominal Torque Output:
8135 Nm

Square Drive Range:
¾ - 1 - 1½ inch

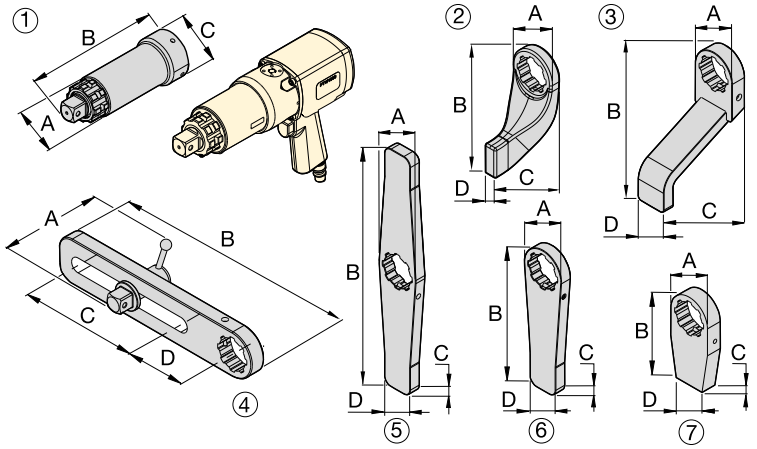



BSH-Series Sockets
Use Heavy-Duty Impact Sockets for power driven torqueing equipment.

Page: 216



Back-Up Spanners
Hands-free tool to be used to stop back nut from turning during make up or break out.

Page: 217

Optional Accessories

For use with PTW1000, 2000, 3000-models				Dimensions (mm)			
Nr.	**Description**	**Model Nr.**	**Application**	A	B	C	D
1	Extended Drive, 6 inch (152 mm)	**ED6TWS**	Nose extension, primarily for truck wheel bolts	62	206	73	–
1	Extended Drive, 12 inch (305 mm)	**ED12TWS**	Nose extension, primarily for truck wheel bolts	62	384	73	–
1	Extended Drive, 18 inch (457 mm)	**ED18TWS**	Nose extension, primarily for truck wheel bolts	62	511	73	–
2	Standard Reaction Arm	**RATWS**	Standard arm included with PTW model	76	172	102	21
3	Extended Reaction Arm	**ERATWS**	Long plate for use with deep well sockets	73	150	202	51
4	Sliding Reaction Arm	**SLRATWS**	For widely spaced and uneven bolt centers	112	381	203	102
5	Double Straight Reaction Arm	**DSATWS**	Reduces time to reposition arm *	73	406	19	102
6	Straight Reaction Arm	**SRATWS**	Long plate for wide spaced reaction points	73	240	19	51
7	Blank Reaction Arm **	**BLTWS**	Weldable blank for custom applications **	72	151	25	51
For use with PTW6000-models							
1	Extended Drive 6 inch (152 mm)	**ED6TWL**	Nose extension, primarily for truck wheel bolts	84	232	102	–
1	Extended Drive 12 inch (305 mm)	**ED12TWL**	Nose extension, primarily for truck wheel bolts	84	384	102	–
2	Standard Reaction Arm	**RATWL**	Standard arm included with PTW model	102	229	146	32
3	Extended Reaction Arm	**ERATWL**	Long plate for use with deep well sockets	102	254	184	64
4	Sliding Reaction Arm	**SLRATWL**	For widely spaced and uneven bolt centers	152	419	190	114
5	Double Straight Arm	**DSATWL**	Reduces time to reposition arm *	102	508	32	57
6	Straight Reaction Arm	**SRATWL**	Long plate for wide spaced reaction points	102	305	32	57
7	Blank Reaction Arm **	**BLTWL**	Weldable blank for custom applications **	102	152	32	57

* Time to reposition arm when repeatedly moving from tightening to loosening.
** WARNING: Blank reaction arms must be heat treated to HRc 38-42 prior to use.

STTC-Series, Safe T™ Torque Checker

ENERPAC

▼ STTC2000 Safe T™ Torque Checker



Quick, simple and accurate mobile torque system safety testing device

Applications

All bolted joints from 144 Ft.lbs up to 16.100 Ft.lbs (195 - 21.800 Nm).

- All Enerpac torque wrenches up to the maximum capacity of the Torque Checker. Also for other brands that fit the envelope of the Torque Checker.
- Oil & Gas flanges,
- Tower Crane installation,
- Bigger machine installation/assembly,
- Wind Tower installation etc.

Industries:

- Oil & Gas, Petrochemical,
- Wind Power Generation,
- Marine,
- Manufacturing,
- Mining, Rail and more.

Safety & Accuracy

- **Durable mobile testing device for Enerpac hydraulic torque wrench systems**
- **Delivering ultimate on site accuracy, testing the entire wrench, pump and hose system to be used on the job**
- **Consistent and repeatable ±1% accurate range.**

Durability

- **Durable splash-proof keypad and display for those harsh working environments**
- **Impact-resistant composite carry case.**

Simplicity

- **Allows the user to validate & test the exact system (torque wrench, pump, hose, etc.) to give a digital read out in Ft.lbs or Nm**
- **Easy to operate: power up and start testing**
- **Transportable: all in one compact carry case, ideal for use on the road with its durable internal 3,6 V-2,2 Ah Lithium-ion battery.**

Versatility

- **Can test all Enerpac S, W, RSL, HMT and DSX-Series wrenches of both square drive and hexagon cassettes up to 16.100 Ft.lbs (21.800 Nm)**
- **Hexagon Reducers or Square Drive Sockets to be bought separately.**

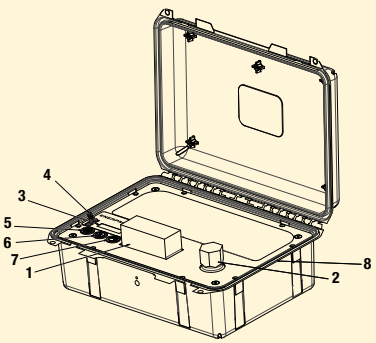

1	Reaction Block	5	Power Switch
2	Hexagon Adaptor	6	Bluetooth Switch
3	Display	7	Units Switch
4	USB-connector	8	Case



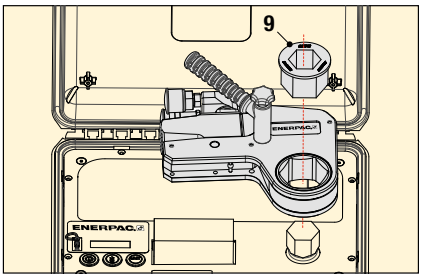

Hexagon Reducer (nr. 9) must be bought separately: see selection tables on next page. ▶

Safe T™ Torque Checker

Safe T™ Torque Checker

Mobile, compact safey device allows the end user to instantly validate the performance of the entire system to be used - not just the wrench only. Allows the user to test the system on-site and in situ.
The user can validate and test the exact torque system (wrench, pump, hose, etc) to give an accurate digital read out.

Safety

The user can verify if the torque system is safe to operate, functioning correctly and within the desired safety parameters.

Unique from Enerpac

No need to wait for annual calibration tests to be confident in the performance and safety of your equipment. The Safe T™ Torque Checker equipment can validated in seconds, saving time and money.

Hexagon Reducers

The W-Series Hexagon Reducers from the tables below, can be used with all W, RLP and HLP-Series hexagon cassettes.

STTC Series



Max. Testing Output:
16.100 Ft.lbs (21.800 Nm)

Accuracy:
± 1%

Battery:
3,6 V Lithium-ion

For use with STTC2000

Hexagon Size (inch)	Hexagon Size (mm)	Cassette Model Number	Hexagon Reducer to 1 3/16" (30 mm) Model Nr.
1 1/16	–	W2101X	-
1 1/8	–	W2102X	-
1 3/16	**30**	**W2103X**	*
1 1/4	32	W2104X	**
1 5/16	–	W2105X	**
1 3/8	–	W2106X	**W2106R103D**
1 7/16	36	W2107X	**W2107R103D**
1 1/2	38	W2108X	**W2108R103**
1 9/16	–	W2109X	**W2109R103**
1 5/8	41	W2110X	**W2110R103**
1 11/16	–	W2111X	**W2111R103**
1 3/4	–	W2112X	**W2112R103**
1 13/16	46	W2113X	**W2113R103**
1 7/8	–	W2114X	**W2114R103**
1 15/16	–	W2115X	**W2115R103**
2	50	W2200X	**W2200R103**
2 1/16	–	W2201X	**W2201R103**
2 1/8	–	W2202X	**W2202R103**
2 3/16	55	W2203X	**W2203R103**
2 1/4	–	W2204X	**W2204R103**
2 5/16	–	W2205X	**W2205R103**
2 3/8	60	W2206X	**W2206R103**



Hexagon Reducers:

Must be bought separately. Can be used with all W, RLP and HLP-Series hexagon cassettes.

* Standard hexagon size of adaptor included with STTC-model

** Requires special reaction block.

For use with STTC4000

Hexagon Size (inch)	Hexagon Size (mm)	Cassette Model Number	Hexagon Reducer to 1 7/16" (36 mm) Model Nr.
1 5/16	–	W4105X	-
1 3/8	–	W4106X	-
1 7/16	**36**	**W4107X**	*
1 1/2	–	W4108X	**
1 9/16	–	W4109X	**
1 5/8	41	W4110X	**W4110R107**
1 11/16	–	W4111X	**W4111R107**
1 3/4	–	W4112X	**W4112R107**
1 13/16	46	W4113X	**W4113R107**
1 7/8	–	W4114X	**W4114R107**
1 15/16	–	W4115X	**W4115R107**
2	50	W4200X	**W4200R107**
2 1/16	–	W4201X	**W4201R107**
2 1/8	–	W4202X	**W4202R107**
2 3/16	55	W4203X	**W4203R107**
2 1/4	–	W4204X	**W4204R107**
2 5/16	–	W4205X	**W4205R107**
2 3/8	60	W4206X	**W4206R107**
2 7/16	–	W4207X	**W4207R107**
2 1/2	–	W4208X	**W4208R107**
2 9/16	65	W4209X	**W4209R107**
2 5/8	–	W4210X	**W4210R107**
2 11/16	–	W4211X	**W4211R107**
2 3/4	70	W4212X	**W4212R107**
2 13/16	–	W4213X	**W4213R107**
2 7/8	–	W4214X	**W4214R107**
2 15/16	75	W4215X	**W4215R107**
3	–	W4300X	**W4300R107**
3 1/16	–	W4301X	**W4301R107**
3 1/8	80	W4302X	**W4302R107**
3 3/16	–	W4303X	**W4303R107**
3 1/4	–	W4304X	**W4304R107**
3 5/16	–	W4305X	**W4305R107**
3 3/8	–	W4306X	**W4306R107**
–	85	W4085MX	**W4085MR107**

For use with STTC8000

Hexagon Size (inch)	Hexagon Size (mm)	Cassette Model Number	Hexagon Reducer to 2 inch (50 mm) Model Nr.
1 7/8	–	W8114X	-
1 15/16	–	W8115X	-
2	**50**	**W8200X**	*
2 1/16	–	W8201X	**
2 1/8	–	W8202X	**
2 3/16	55	W8203X	**W8203R200**
2 1/4	–	W8204X	**W8204R200**
2 5/16	–	W8205X	**W8205R200**
2 3/8	60	W8206X	**W8206R200D**
2 7/16	–	W8207X	**W8207R200**
2 1/2	–	W8208X	**W8208R200**
2 9/16	65	W8209X	**W8209R200**
2 5/8	–	W8210X	**W8210R200**
2 11/16	–	W8211X	**W8211R200**
2 3/4	70	W8212X	**W8212R200**
2 13/16	–	W8213X	**W8213R200**
2 7/8	–	W8214X	**W8214R200**
2 15/16	75	W8215X	**W8215R200**
3	–	W8300X	**W8300R200**
3 1/16	–	W8301X	**W8301R200**
3 1/8	80	W8302X	**W8302R200**
3 3/16	–	W8303X	**W8303R200**
3 1/4	–	W8304X	**W8304R200**
3 5/16	–	W8305X	**W8305R200**
–	85	W8085MX	**W8085MR200**
3 3/8	–	W8306X	**W8306R200**
3 7/16	–	W8307IX	**W8307R200**
3 1/2	–	W8308X	**W8308R200**
–	90	W8090MX	**W8090MR200**
3 9/16	–	W8309X	**W8309R200**
3 5/8	–	W8310X	**W8310R200**
3 11/16	–	W8311X	**W8311R200**
3 3/4	95	W8312X	**W8312R200**
3 13/16	–	W8313X	**W8313R200**
3 7/8	–	W8314X	**W8314R200**
3 15/16	100	W8315X	**W8315R200**
4	–	W8400X	**W8400R200**
4 1/16	–	W8401IX	**W8401R200**
4 1/8	105	W8402X	**W8402R200**

For use with STTC15000

Hexagon Size (inch)	Hexagon Size (mm)	Cassette Model Number	Hexagon Reducer to 2 5/8 inch Model Nr.
2 7/16	–	W15207X	-
2 1/2	–	W15208X	-
2 9/16	65	W15209X	-
2 5/8	–	**W15210X**	*
2 11/16	–	W15211X	**
2 3/4	70	W15212X	**
2 13/16	–	W15213X	**
2 7/8	–	W15214X	**W15214R210**
2 15/16	75	W15215X	**W15215R210**
3	–	W15300X	**W15300R210**
3 1/16	–	W15301X	**W15301R210**
3 1/8	80	W15302X	**W15302R210**
3 3/16	–	W15303X	**W15303R210**
3 1/4	–	W15304X	**W15304R210**
3 5/16	–	W15305X	**W15305R210**
–	85	W15085MX	**W15085MR210**
3 3/8	–	W15306X	**W15306R210**
3 7/16	–	W15307IX	**W15307R210**
3 1/2	–	W15308X	**W15308R210**
–	90	W15090MX	**W15090MR210**
3 9/16	–	W15309X	**W15309R210**
3 5/8	–	W15310X	**W15310R210**
3 11/16	–	W15311X	**W15311R210**
3 3/4	95	W15312X	**W15312R210**
3 13/16	–	W15313X	**W15313R210**
3 7/8	–	W15314X	**W15314R210**
3 15/16	100	W15315X	**W15315R210**
4	–	W15400X	**W15400R210**
4 1/16	–	W15401IX	**W15401R210**
4 1/8	105	W15402X	**W15402R210**
4 3/16	–	W15403IX	**W15403R210**
4 1/4	–	W15404X	**W15404R210**
4 5/16	110	W15405X	**W15405R210**
4 3/8	–	W15406X	**W15406R210**
4 7/16	–	W15407X	**W15407R210**
4 1/2	–	W15408IX	**W15408R210**
–	115	W15115MX	**W15115MR210**
4 9/16	–	W15409IX	**W15409R210**
4 5/8	–	W15410IX	**W15410R210**

Nominal Measurable Torque Output (Ft.lbs)	Nominal Measurable Torque Output (Nm)	Model Number [1]	Hexagon Adaptor included (inch)	Hexagon Adaptor included (mm)	Carry Case Size L x B xH (mm)	(kg)	Sockets to be used with Square Drive Wrenches [2]	Hexagon Cassette fits Adaptor. For other hexagon sizes, see table above with Hexagon Reducers sizes [2] W-Series	RSL-Series	HMT-Series
2140	2900	**STTC2000**	1 3/16	30	414 x 328 x 328	6	BSH7530	W2103X	RLP1103	HLP1103
4383	5950	**STTC4000**	1 7/16	36	414 x 328 x 328	8	BSH1036	W4107X	RLP3107	HLP3107
8893	12.000	**STT 8000**	2	50	624 x 498 x 168	19	BSH1550	W8200X	RLP5200	HLP3200
16.100	21.800	**STTC15000**	2 5/8	–	624 x 498 x 168	26	BSH15263	W15210X	RLP8210	HLP7210

1) With 3,6 V-2,2 Ah Lithium-ion battery.

2) Square drive sockets, hexagon cassettes and hexagon reducers must be bought separately.

MCS-Series, Mobile Calibration System

ENERPAC

▼ MCS7500C, Mobile Calibration System



MCS Series

Measurable Output Torque Range:
200 - 10.000 Nm

Measurable Output Torque Range:
148 - 7378 Ft.lbs

Female Square Drive:
1½ inch

Accuracy

The calibration system is a calibrated instrument qualified in a UKAS certified laboratory. The accuracy of the MCS7500C is calibrated to meet or exceed: 1% of Full Scale Deflection (FSD) from 2% to 8% of torque range and 1% of reading from 8% to 100% of torque range.



Female Reducer Set

The Female Reducer Set consists of two reducers: 1½ x 1 inch and 1½ x 3/4 inch. To be ordered separately as **MCS7500RS**.

Additional Reaction Block and Adaptor

A heavy-duty adjustable reaction block in combination with one of the three adaptors is required to facilitate the use with S, RSQ and DSX-Series Square Drive Wrenches as well as most competitive hydraulic wrenches to maximum 10.000 Nm (7375 Ft.lbs). Drawings of additional reaction block and adaptor are available upon request.

Versatility

- **Accurately measures torque output for pneumatic and electric continuous rotation tools and square drive hydraulic (*) torque wrenches from 200 - 10,000 Nm (148 - 7,375 Ft.lbs)**
- **Adaptable design enables use with a large variety of Enerpac and competitive wrenches**
- **Internal Li-ion battery pack, external power via 5V DC USB power supply.**

Performance

- **Certificate Manager feature enables quick and easy creation of calibration certificates**
- **Tool database feature allows specific wrench data and calibration results to be recorded and saved for future use**
- **Each MCS comes with a standard ISO17025 calibration certificate.**

Ease of Use

- **Compact design in carrying facilitates easy transport, allowing calibration to be carried out in the shop, on jobsites, or even in a vehicle**
- **Integrated digital interface enables torque values to be displayed, saved, printed or transferred to a computer.**

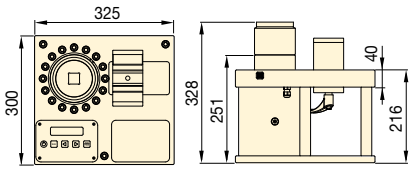

Minimum Measurable Torque Output		Nominal Measurable Torque Output		Female Square Drive	Model Number **	Description	
(Nm)	(Ft.lbs)	(Nm)	(Ft.lbs)	(inch)			(kg)
200	148	10.000	7375	1½	**MCS7500C**	MCS with carrying case	40

* Additional Reaction Block and appropriate Adaptor is required with the use of S, RSQ and DSX-Series square drive hydraulic wrenches.

** Not suitable for use with battery tools, impact tools or low-profile torque wrenches.

Optimum Wrench-Torque Pump Combinations

For optimum speed and performance Enerpac recommends the following system set-up with wrench-pump-hose combinations. For other combinations, consult your Enerpac bolting expert or your authorized Enerpac distributor.

		ELECTRIC TORQUE PUMPS					AIR DRIVEN TORQUE PUMPS	
		Cordless XC-Series	E-Pulse® E-Series	TQ-Series	ZU4T-Series	ZE4T-Series ZE5T-Series	LAT-Series	ZA4T-Series
								
		Page: 266	Page: 268	Page: 270	Page: 272	Page: 276	Page: 278	Page: 280
	Speed:							
	Oil Flow at 700 bar:	0,25 l/min	0,52 l/min	0,5 l/min	1,0 l/min	0,8 - 1,6 l/min	0,4 l/min	1,0 l/min
	Reservoir Capacity:	2,0 litres	3,0 litres	4,0 litres	4,6 - 6,8 litres	4,6 - 39 litres	3,0 litres	4,6 - 6,8 litres
	Duty Cycle:	Intermittent	Heavy-Duty	Standard	Heavy-Duty	Heavy-Duty	Standard	Heavy-Duty
	Weight:							
	Work:	Field	Field/Factory	Field/Factory	Field	Factory	Field	Field
 212	S1500X	Optimal	Optimal	Optimal	Optimal	Optimal	Optimal	Optimal
	S3000X							
	S6000X	–						
	S11000X		Acceptable	Acceptable			Acceptable	
	S25000X							
 220	W2000X	Optimal	Optimal	Optimal			Optimal	
	W4000X							
	W8000X	–						
	W15000X		Acceptable	Acceptable			Acceptable	
	W22000X							
	W35000X							
 234	RSL1500	Optimal	Optimal	Optimal	Optimal	Optimal	Optimal	Optimal
	RSL3000							
	RSL5000							
	RSL8000	–	Acceptable	Acceptable			Acceptable	
	RSL11000							
	RSL19000							
	RSL28000							
 246	DSX1500	Optimal	Optimal	Optimal	Optimal	Optimal	Optimal	Optimal
	DSX3000							
	DSX5000	–						
	DSX11000		Acceptable	Acceptable			Acceptable	
	DSX25000							
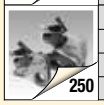 250	HMT1500	Optimal	Optimal	Optimal	Optimal	Optimal	Optimal	Optimal
	HMT3500							
	HMT7500	Acceptable						
	HMT13000	–	Acceptable	Acceptable			Acceptable	

XC-Series, Portable Cordless Pumps
Ideal for maintenance bolting applications at sites that do not have access to power or where having extension cords or air hoses could cause trip hazards.

E-Series, E-Pulse Portable Torque Pumps
Ideal for high volume fastening applications where weight is critical. Feature an interactive pendant for operation, programming and diagnostics.

TQ700 Series Electric Torque Pumps
Designed for both portability and production, to deliver superior bolting speed.

ZU4T-Series, Electric Torque Pumps
Works well with long extension cords or generator driven electrical power supplies. Available in **Pro** and **Classic** formats.
ZU4T Pro Pumps have an LCD feature to display torque or pressure, selectable torque wrench, and self-diagnostics.
ZU4T Classic Pumps feature an analogue gauge and a basic electrical package to deliver durable, safe and efficient hydraulic power.

ZE-T Series Electric Torque Pumps
Features LCD to display torque or pressure values, and self-diagnostics. With induction motor, making the ZE-Series the coolest and quietest pumps in their class.

LAT-Series, Lightweight Torque Air Pumps
Combines compact design and high productivity for bolting applications in areas hard to access with larger air powered pumps.

ZA4T-Series Air Driven Torque Pumps
This air driven pump is best suited to power medium to large size torque wrenches.

THQ-Series, Torque Wrench Hoses
Use Enerpac THQ-Series twin hoses with all torque wrenches to ensure the integrity of your hydraulic system (see page 249).

Tel: +45 63 12 83 00 | Email: ps@hymatik.com | www.hymatik.com | Hvidkaervej 27a, DK-5250 Odense SV, Denmark

XC-Series, Cordless Torque Wrench Pumps

ENERPAC

▼ XC1502TE



Portable Battery Pump for Torque Applications

- **Ideal for maintenance bolting applications requiring portability and convenience**
- **Interactive pendant provides visual and vibration feedback of pump operation**
- **Superior run-time with 5Ah, 28V battery**
- **6 metres detachable pendant control**
- **100 mm glycerine-filled gauge for easy viewing**
- **Bladder reservoir allows pump to be used in any position**
- **High-strength fiberglass reinforced composite housing provides superior durability in demanding job site environments**
- **Integrated handle and carrying strap for portability.**



28-Volt Battery

The **XC28V5** 5 Amps battery with Lithium-Ion technology for maximum battery performance.



Battery Charger

1-hour quick charger.

115V battery charger	**XC115VC**
230V battery charger	**XC230VC**



Roll Cage

Roll cage accessory option for both XC-TW and XC pump. Please order model number **XCRCTK**.



Torque Wrenches

The following torque wrenches are ideal for use with the XC-Series Cordless Torque Wrench Pumps:

S	W	RSL	DSX	HMT
S1500X	W2000X	RSL1500	DSX1500	HMT1500
S3000X	W4000X	RSL3000	DSX3000	HMT3500
		RSL5000		HMT7500

Larger torque wrenches will work with the pump, battery run time and application speed will be impacted.

Page: 265



Tel: +45 63 12 83 00 | Email: ps@hymatik.com | www.hymatik.com | Hvidkaervej 27a, DK-5250 Odense SV, Denmark

XC-Series, Cordless Torque Wrench Pumps

Battery-Powered Torque Wrench Pumps

The XC-Series Cordless Torque Wrench pump is ideal for maintenance applications in the PowerGen, Oil & Gas and MRO markets. This portable pump is perfect for remote locations, sites that do not have access to power or where trip hazards are a concern.

The interactive pendant allows the user to set and clear pressure and operate in manual or auto-cycle mode.
The pump has an easily accessible user adjustable valve for precise pressure control.

Torque Wrench	Nut A/F (mm)	Stud (mm)	Pressure (bar)	Torque (Nm)	Fasteners torqued
S3000X	60	38	330	2035	32
W2000X	60	38	350	1356	52

XC Series



Reservoir Capacity:
2,0 litres

Flow at Rated Pressure:
0,25 l/min

Motor Size:
0,37 kW

Maximum Operating Pressure:
700 bar

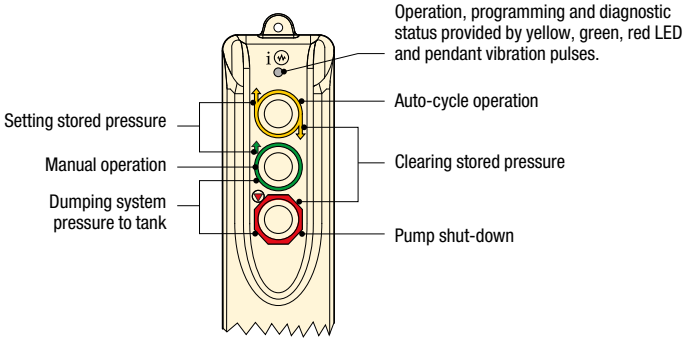



Torque Wrench Hoses

Use Enerpac 700 bar THQ-Series torque wrench hoses with torque wrenches and pumps.
See page 249.

2 m long, 2 hoses	**THQ702T**
6 m long, 2 hoses	**THQ706T**
12 m long, 2 hoses	**THQ712T**

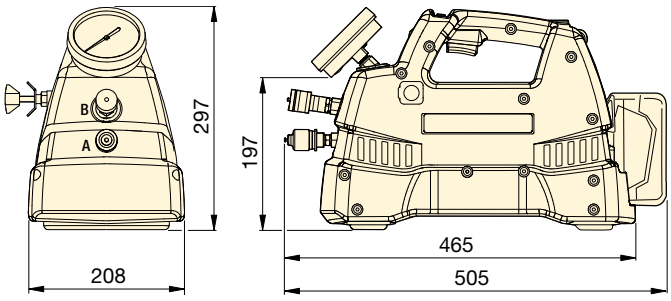

OIL FLOW vs. PRESSURE

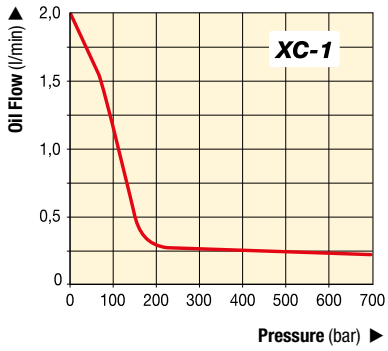

▼ SELECTION CHART

Description	Useable Oil Capacity (litres)	Model Number	Output Flow Rate (l/min) No Load	140 bar	700 bar	Included with pump	(kg) [1]
Cordless Pump Kit	2,0	**XC1502TB**	2,05	0,49	0,25	2 batteries and 115V charger	12
Cordless Pump Kit	2,0	**XC1502TE**	2,05	0,49	0,25	2 batteries and 230V charger	12
Cordless Pump	2,0	**XC1502T**	2,05	0,49	0,25	No batteries or charger	12

[1] Weight includes oil, without battery. battery weight 1,1 kg.

E-Series E-Pulse®, Electric Wrench Pumps

ENERPAC

▼ EP3504TE, E-Pulse Torque Wrench Pump



Performance

- Two-stage pump with high by-pass pressure: 1,0 l/min at 200 bar, 0,52 l/min at 700 bar
- Smart controls enable motor to maintain constant power across the pressure range
- 24VDC power regulator minimizes effects of poor power supply
- Six-piston block design provides even flow for smooth operation.

Durability

- Durable aluminium housing
- Integrated heat exchanger minimizes heat buildup
- High-efficiency permanent magnet, direct drive motor enables continuous use and long service life
- Built-in thermal protection
- IP Rating: IP54 on the pump, IP67 on the pendant.

Convenience

- Integrated calibrated pressure gauge
- Interactive pendant with smart controls
- Pendant and cord management system
- Intelligent Auto-Cycle enables press and release actuation to cycle torque wrench until final torque is achieved
- User can set pressure and operate in manual or auto-cycle mode
- Convenient oil fill port, oil level indicator and automatic breather.

Productivity through innovation

Bolting Integrity Software

A comprehensive on-line software solutions for Bolted Joint Integrity. The software offers Tool selection, Bolt Load calculations and Tool pressure settings, as well as, a combined Application Data Sheet and Joint Completion Report. Custom Joint information can also be entered.

Page: 412



Torque Wrenches

The following torque wrenches are ideal for use with the E-Pulse Torque Wrench Pumps:

S	W	RSL	DSX	HMT
S1500X	W2000X	RSL1500	DSX1500	HMT1500
S3000X	W4000X	RSL3000	DSX3000	HMT3500
		RSL5000	DSX5000	HMT7500

Larger torque wrenches will work with the pump, but application speed will be impacted.

Page: 265



Torque Wrench Hoses

Use Enerpac 700 bar THQ-Series torque wrench hoses with torque wrenches and pumps.
See page 249.

2 m long, 2 hoses	**THQ702T**
6 m long, 2 hoses	**THQ706T**
12 m long, 2 hoses	**THQ712T**

E-Pulse®, Electric Torque Wrench Pumps

E-Pulse Torque Wrench Pumps

The Enerpac E-Pulse Electric Torque Wrench Pump, through its innovative design, is ideal for high volume fastening applications where weight is a critical factor. Smart controls enable the motor to maintain constant power providing higher flow than traditional pumps.

The durable aluminum housing, integrated heat exchanger and highly efficient permanent magnet motor minimize heat buildup in the toughest environments. The interactive pendant provides the operator a number of usage options for optimal efficiency. The E-Pulse Torque Wrench Pump is the pinnacle of bolting equipment.

E Series



Reservoir Capacity:
3,0 litres

Flow at Rated Pressure:
0,52 l/min

Motor Size:
0,63 kW

Maximum Operating Pressure:
700 bar

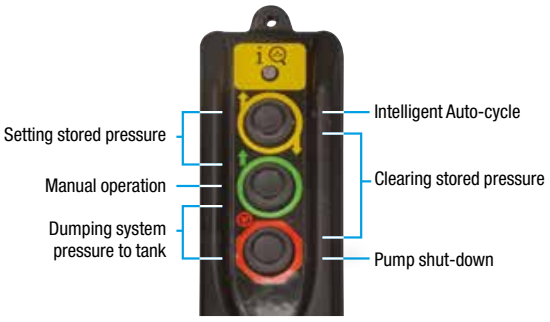

Pendant with 6 metre cord

Interactive Torque Wrench Pendant

- User can set pressure and operate in manual or auto-cycle mode
- Intelligent Auto-Cycle enables press and release actuation to cycle torque wrench until final torque is achieved.

OIL FLOW vs. PRESSURE

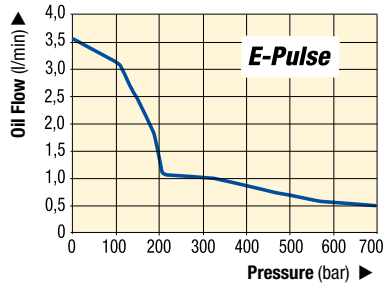

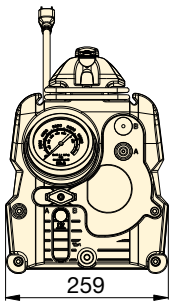

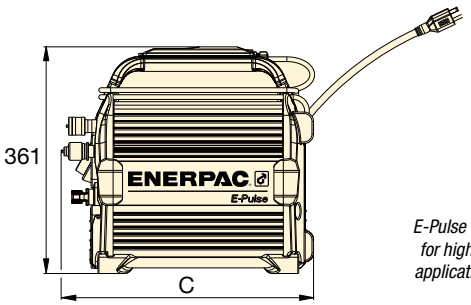



E-Pulse torque pump used for high volume fastening applications where weight is a critical factor. ▶

▼ SELECTION CHART

Number of Wrenches pump can operate	Useable Oil Capacity (litres)	Model Number	Output Flow Rate (l/min) 1 bar	175 bar	350 bar	700 bar	Motor Voltage (VAC)	Current Draw (Amps)	Plug Type	Sound Level (dBA)	Dimension C (mm)	(kg) [1]
1	3,0	**EP3504TB**	3,61	2,13	0,95	0,52	100-120	12	NEMA 5-15	70-85	401	20,4
		EP3504TI	3,61	2,13	0,95	0,52	200-250	7	NEMA 6-15	70-85	401	20,4
		EP3504TE	3,61	2,13	0,95	0,52	200-250	7	Schuko CEE 7/7	70-85	401	20,4
2	3,0	**EP3504TB-M ***	3,61	2,13	0,95	0,52	100-120	12	NEMA 5-15	70-85	429	21,7
		EP3504TI-M *	3,61	2,13	0,95	0,52	200-250	7	NEMA 6-15	70-85	429	21,7
		EP3504TE-M *	3,61	2,13	0,95	0,52	200-250	7	Schuko CEE 7/7	70-85	429	21,7

* Pump model with multi-port manifold.

[1] with oil

TQ-Series, Electric Torque Pumps

ENERPAC

▼ TQ700E



- **Optimized flow technology – three stage pump maximizes productivity of the pump and tool while minimizing heat build-up and down time**
- **Heat exchanger is standard included**
- **A quiet (<85 dBA), lightweight pump with a compact footprint – easy to move around and through the work site**
- **Durable roll cage with an ergonomically sized handle and shielded gauge – a pump that is easy to put into position and safe from on site operational hazards**
- **Maintenance made simple with a brushless motor designed for continuous usage**
- **Straightforward operation with a simple pressure set and convenient to use 6 m pendant control – immediate productivity for crews operating the pump**
- **IP55 Rating for Superior Dust and Water Protection**
- **Transparent gauge overlays in Nm and Ft.lbs for all Enerpac torque wrenches provide a quick torque reference.**



The TQ700E and the W-Series wrenches are a productive combination in wind applications.

Lightweight Torque Wrench Pumps



Four Port Manifold

The TQ700 offers an optional four wrench manifold as an accessory factory installed. (Add suffix "M" at the end of the model number. For example: **TQ700EM**).



Torque Wrench Hoses

Use Enerpac 700 bar THQ-Series torque wrench hoses with torque wrenches and pumps.

2 m long, 2 hoses	**THQ702T**
6 m long, 2 hoses	**THQ706T**
12 m long, 2 hoses	**THQ712T**



Hydraulic Torque Wrenches

Enerpac offers a complete range of square drive and hexagon cassette torque wrenches.

Page: 211



Overlay Kit with Gauge

Available separately for use with TQ-Series: **GT4015Q** includes gauge and torque overlays for all Enerpac torque wrenches.

Tel: +45 63 12 83 00 | Email: ps@hymatik.com | www.hymatik.com | Hvidkaervej 27a, DK-5250 Odense SV, Denmark

Electric Torque Pumps

TQ700 Applications

The TQ700 Series pump is ideal for powering hydraulic wrenches for the Power Generation and Wind Markets.

Bolting speed is more complex than how much flow per minute the pump produces. The key is optimising the flow rate across the entire bolting cycle. With more oil flowing at the right time and at the right volume, you achieve the optimized flow for a hydraulic bolting system.

The result of this optimized flow is more bolts tightened faster and a more productive work team.

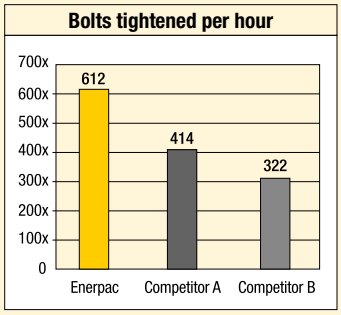

Internal laboratory testing based on standard torqueing procedure on a pipe flange with 14, 1⅞" bolts.

TQ Series



Reservoir Capacity:
4,0 litres

Flow at Rated Pressure:
0,5 l/min

Motor Size:
0,75 kW

Maximum Operating Pressure:
700 bar



Torque Pump Selection Matrix

For optimum speed and performance see the torque pump and hose selection matrix.

Page: 265

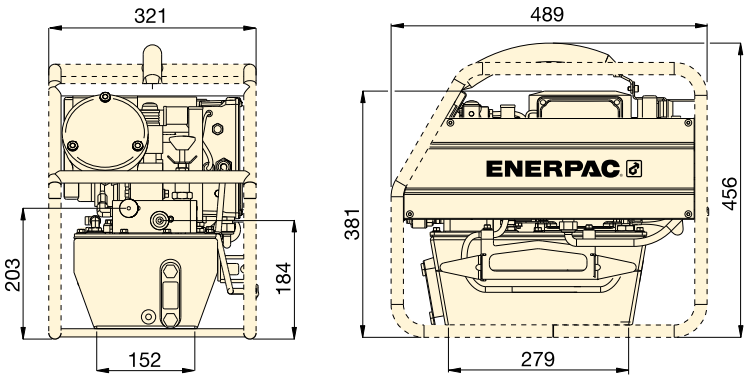

For Use with Torque Wrenches	Pressure Rating (bar)	Model Number [1]	Useable Oil Capacity (litres)	Motor Size (kW)	Motor Electrical Specifications (Volt - Ph - Hz)	Sound Level (dBA)	(kg)
All Series	700	**TQ700B**	4,0	0,75	115 - 1 - 50/60	82 - 85	31
	700	**TQ700E** [2]	4,0	0,75	230 - 1 - 50	82 - 85	30
	700	**TQ700I** [3]	4,0	0,75	230 - 1 - 60	82 - 85	30

[1] All models meet CE safety requirements and all TÜV requirements.
[2] TQ700E with European plug and CE EMC directive compliant.
[3] TQ700I with NEMA 6-15 plug.

▼ *The TQ700E and the W-Series wrenches are a productive combination.*



ZU4T-Series, Electric Torque Pumps

ENERPAC

▼ ZU4204TE-Q (Pro), ZU4204BE-Q (Classic)



Z Tough, Dependable Innovative CLASS



Classic Electrical

Basic electrical package includes mechanical contactor, ON/OFF toggle switch, pendant with electro-mechanical push buttons, 24V transformer timer and operator accessible circuit breaker.

- **Features Z-Class high-efficiency pump design; higher oil flow and bypass pressure, cooler running and requires 18% less current draw than comparable pumps**
- **Powerful 1,25 kW universal electric motor provides high power-to-weight ratio and excellent low-voltage operating characteristics**
- **High-strength, molded composite shroud protects motor and electrical components, while providing an ergonomic, non-conductive handle for easy transport**
- **Low-voltage pendant provides additional safety for the operator.**

Pro Series pump only

- **LCD readout provides pressure display and a number of diagnostic and readout capabilities never before offered on a portable electric pump**
- **AutoCycle feature provides continuous cycle operation of the torque wrench as long as the advance button is pressed (pump can be used with or without auto cycle feature).**



Pro-Series

Back-lit LCD and Pressure Transducer featuring Auto-Cycle Technology.

- Torque wrench model is selectable
- "Auto cycle" setting easily programmable.
- Digital read-out and "Autocycle" setting
- Pump usage information, hour and cycle counts
- Low-voltage warning and recording
- Self-test and diagnostic capabilities
- Information can be displayed in English, French, German, Italian, Spanish and Portuguese
- Pressure transducer is more accurate and durable than analog gauges
- Easy-viewing variable rate display
- Display pressure in bar, MPa or psi.



◀ *Any brand of hydraulic torque wrench can be powered by the portable ZU4T-Series torque pump.*

ZU4T-Series, Torque Pumps

Z-Class – A Pump For Every Application

Patented Z-Class pump technology provides high by-pass pressures for increased productivity – important in applications using long hose runs and high pressure-drop circuits, like heavy lifting or certain double-acting tools.

Enerpac ZU4T-Series pumps are built to power small to large torque wrenches. Choosing the right ZU4T-Series torque wrench pump for your application is easy.

Classic Electric Torque Wrench Pump

- The Classic has traditional electro-mechanical components (transformers, relays and switches) in place of solid-state electronics.
  The Classic delivers durable, safe and efficient hydraulic power.

Pro Series Electric Torque Wrench Pump

- Digital (LCD) display features a built-in hour meter, pressure display and shows self-diagnostic, cycle-count and low voltage warning information.
  These premium features are not available on any other pump – anywhere!
- Auto-Cycle feature provides continuous cycle operation of the torque wrench as long as the advance button is pressed (pump can be used with or without Auto-Cycle feature).

ZU4T-Series, Torque Pump Ordering Guide *Page:* 275

ZU4T Series



Reservoir Capacity:
4,6 - 6,8 litres

Flow at Rated Pressure:
1,0 l/min

Motor Size:
1,25 kW

Maximum Operating Pressure:
700 bar

Bolting Integrity Software

Enerpac Bolting Integrity Software Solutions play a key role in implementing and managing an Integrity Program for bolted connections. The software offers Tool selection, Bolt Load calculations and Tool pressure settings, as well as, a combined Application Data Sheet and Joint Completion Report. Custom Joint information can also be entered.

Page: 412



Overlay Kit with Gauge

Available separately for use with ZU4T-Series Classic: **GT4015Q** includes gauge and torque overlays for all Enerpac torque wrenches.

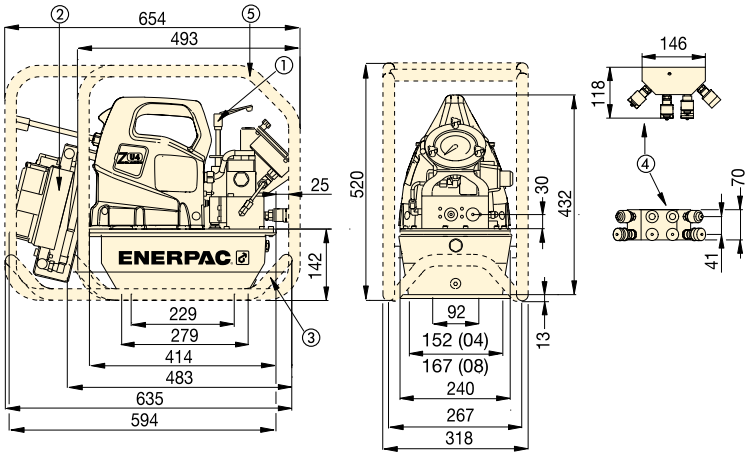

① User adjustable relief valve
② Heat Exchanger (optional)
③ Skidbar (optional)
④ 4-wrench manifold (optional)
⑤ Roll cage (optional)

OIL FLOW VERSUS PRESSURE

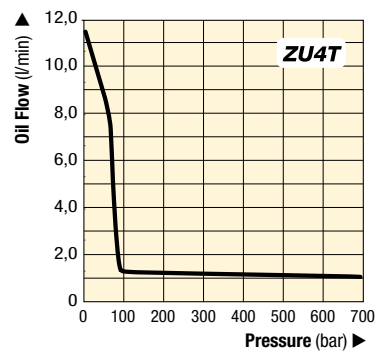

ZU4T-Series Torque Pumps

ZU4T-Series Performance Chart							
Motor Size	Output Flow Rate (l/min)				Motor Electrical Specification	Sound Level	Relief Valve Adjustment Range
(kW)	7 bar	50 bar	350 bar	700 bar	(Volt - Phase - Hz)	(dBA)	(bar)
1,25	11,5	8,8	1,2	1,0	115 - 1 - 50/60 208-240 - 1 - 50/60	85-90	124-700

ZU4T-Series, Torque Pump Accessories

ENERPAC



4-Wrench Manifold

- **For simultaneous operation of multiple torque wrenches.**

Accessory Kit * Model Nr.	Can be used on ZU4T-Series torque pumps
ZTM-Q *	for 700 bar torque wrenches

* 4-Wrench Manifold adds 2,7 kg to pump weight.



Skid Bar

- **Provides greater pump stability on soft or uneven surfaces**
- **Provides easy two-handed lift.**

Accessory Kit Model Nr.	Can be used on ZU4T-Series torque pumps
SBZ-4	4,6 and 6,8 litres reservoir [1]
SBZ-4L	4,6 and 6,8 litres reservoir [2]

[1] Without heat exchanger 2,2 kg.
[2] With heat exchanger 3,2 kg.



Heat Exchanger

- **Removes heat from the bypass oil to provide cooler operation**
- **Stabilizes oil viscosity, increasing oil life and reduces wear of pump and other hydraulic components.**

Accessory Kit * Model Nr.	Can be used on ZU4T-Series torque pumps
ZHE-U115	115 V pumps
ZHE-U230	230 V pumps

* Heat Exchanger adds 4,1 kg to pump weight.



Roll Cage

- **Protects pump**
- **Provides greater pump stability.**

Thermal Transfer * (Btu/h)	Max. Pressure (bar)	Max. Oil Flow (l/min)	Voltage (VDC)
900	20,7	26,5	12

* At 1,9 l/min at 21 °C ambient temperature. Do not exceed maximum oil flow and pressure ratings. Heat exchanger is not suitable for water-glycol or high water-based fluids.

▼ *These rigid steel wrenches with low profile interchangeable hexagon cassettes guarantee durability and maximum versatility in bolting applications.*



Accessory Kit Model Nr.	Can be used on ZU4T-Series torque pumps
ZRC-04	4,6 and 6,8 litres reservoir [1]
ZRC-04H	4,6 and 6,8 litres reservoir [2]

[1] Without heat exchanger 4,3 kg.
[2] With heat exchanger 4,3 kg.



Torque Wrench Hoses

Use Enerpac twin safety hoses to connect your torque wrench to the pump.

For 700 bar	Model-Nr.
2 m long, 2 hoses	THQ702T
6 m long, 2 hoses	THQ706T
12 m long, 2 hoses	THQ712T

ZU4T-Series, Torque Pump Ordering Guide

▼ Select a pump from the model matrix at the bottom of the page.

The functionality of the pump can be determined by the model number. Utilize the guide below to select the best pump for the application.

Z	U	4	2	08	T	E	-	Q	H	M
1 Product Type	2 Motor Type	3 Flow Group	4 Valve Type	5 Reservoir Size	6 Valve Operation	7 Voltage		8 Must be Q	8 Factory Installed Accessories	

1 Product Type
- **Z** = Pump series

2 Motor Type
- **U** = Universal electric motor

3 Flow Group
- **4** = 1,0 l/min @ 700 bar

4 Valve Type
- **2** = Torque wrench valve

5 Reservoir Size
- **04** = 4,6 litres
- **08** = 6,8 litres

6 Valve Operation
- **T** = **Pro Series pump** with solenoid valve and pendant, LCD Electric and pressure transducer
- **B** = **Classic pump** with solenoid valve and pendant.

7 Voltage
- **B** = 115V, 1 ph, 50/60 Hz
- **E** = 208-240V, 1 ph, 50/60 Hz (with European plug CE RF compliant)
- **I** = 208-240V, 1 ph, 50/60 Hz (with NEMA 6-15 plug)

8 Factory installed accessories
- **H** = Heat exchanger
- **K** = Skid bar
- **M** = 4-wrench manifold
- **R** = Roll cage

ZU4T Series



Reservoir Capacity:
4,6 - 6,8 litres

Flow at Rated Pressure:
1,0 l/min

Motor Size:
1,25 kW

Maximum Operating Pressure:
700 bar



Torque Pump Selection Matrix

For optimum speed and performance see the torque pump and hose selection matrix.

Page: 265

▼ ZU4T-SERIES CLASSIC TORQUE PUMP MODELS

ZU4T Classic [1] Model Numbers 230 VAC, 1 ph [2]	Reservoir Capacity (litres)	Factory Installed Accessories: Heat Exchanger	Roll Cage	Skid Bar	4-Wrench Manifold	(kg)
ZU4204BE-Q (B, I)	4,6					33
ZU4208BE-Q (B, I)	6,8					35
ZU4204BE-QH (B, I)	4,6	●				40
ZU4208BE-QH (B, I)	6,8	●				39
ZU4204BE-QR (B)	4,6		●			37
ZU4208BE-QR (B)	6,8		●			39
ZU4204BE-QHR (B)	4,6	●	●			41
ZU4208BE-QHR (B, I)	6,8	●	●			44
ZU4208BE-QHK (B, I)	6,8	●		●		42
ZU4208BE-QHM (B, I)	6,8	●			●	42
ZU4208BE-QMR (B)	6,8		●		●	42
ZU4208BE-QHMR (B, I)	6,8	●	●		●	46

▼ ZU4T-SERIES PRO TORQUE PUMP MODELS

ZU4T Pro Model Numbers 230 VAC, 1 ph [3]	Reservoir Capacity (litres)	Factory Installed Accessories: Heat Exchanger	Roll Cage	Skid Bar	4-Wrench Manifold	(kg)
ZU4204TE-Q (B, I)	4,6					31
ZU4208TE-Q (B, I)	6,8					34
ZU4204TE-QH (B, I)	4,6	●				35
ZU4208TE-QH (B, I)	6,8	●				38
ZU4204TE-QR (B)	4,6		●			35
ZU4208TE-QR (B)	6,8		●			38
ZU4204TE-QHR (B)	4,6	●	●			40
ZU4208TE-QHR (B, I)	6,8	●	●			42
ZU4208TE-QHK (B, I)	6,8	●		●		41
ZU4208TE-QHM (B, I)	6,8	●			●	41
ZU4208TE-QMR (B)	6,8		●		●	41
ZU4208TE-QHMR (B, I)	6,8	●	●		●	45

[1] Classic Electric Pump has traditional electro-mechanical components (transformers, relays, switches) in place of solid-state electronics.

[2] "**B**" indicates pump is 115V, 1-phase, 50/60 Hz. Model number example: **ZU4204BB-QHR**.
"**I**" indicates pump is 208-240V, 1-phase, 50/60 Hz with NEMA 6-15 plug. Model number example: **ZU4208BI-QHR**.

[3] "**B**" indicates pump is 115V, 1-phase, 50/60 Hz. Model number example: **ZU4204TB-QHR**.
"**I**" indicates pump is 208-240V, 1-phase, 50/60 Hz with NEMA 6-15 plug. Model number example: **ZU4204TI-QHR**.

ZE-Series, Electric Torque Pumps

ENERPAC

▼ ZE4204TE-QHR



Tough, Dependable Innovative CLASS

- **Auto-Cycle feature provides continuous cycle operation of the torque wrench as long as the advance button is pressed (pump can be used with or without auto cycle feature)**
- **LCD readout provides pressure and torque display and a number of diagnostic and readout capabilities never before offered on a portable electric pump**
- **Totally enclosed, fan-cooled industrial electric motors supply extended life and stand up to harsh industrial environments**
- **High-strength, molded electrical enclosure protects electronics, power supplies and LCD readout from harsh environments.**



Pro-Series

Back-lit LCD and Pressure Transducer featuring Auto-Cycle Technology.

- Torque wrench model is selectable
- "Auto cycle" setting easily programmable.
- Digital read-out and "Autocycle" setting
- Pump usage information, hour and cycle counts
- Low-voltage warning and recording
- Self-test and diagnostic capabilities
- Information can be displayed in English, French, German, Italian, Spanish and Portuguese
- Pressure transducer is more accurate and durable than analog gauges
- Easy-viewing variable rate display
- Display pressure in bar, MPa or psi.

Bolting Integrity Software

Enerpac Bolting Integrity Software Solutions play a key role in implementing and managing an Integrity Program for bolted connections.

The software offers Tool selection, Bolt Load calculations and Tool pressure settings, as well as, a combined Application Data Sheet and Joint Completion Report.

Custom Joint information can also be entered.

Page: 412



◀ *The ZE4T-Series torque wrench pumps are perfectly matched for this W2000X wrench.*

Tel: +45 63 12 83 00 | Email: ps@hymatik.com | www.hymatik.com | Hvidkaervej 27a, DK-5250 Odense SV, Denmark

Electric Torque Pumps

ZE4T AND ZE5T-SERIES OIL FLOW VERSUS PRESSURE

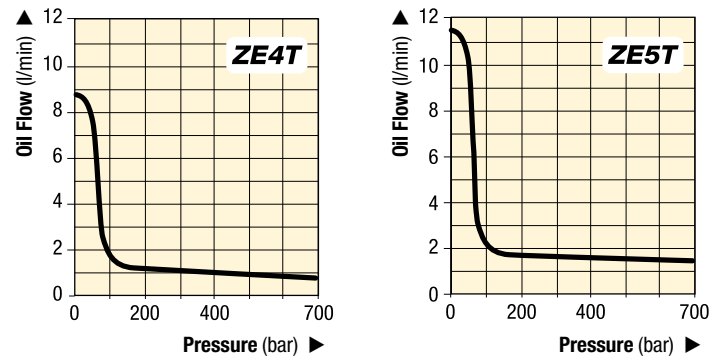

ZE4T ZE5T Series



Reservoir Capacity:
4,6 - 19,8 litres

Flow at Rated Pressure:
0,82 - 1,64 l/min

Motor Size:
1,1 - 2,2 kW

Maximum Operating Pressure:
700 bar

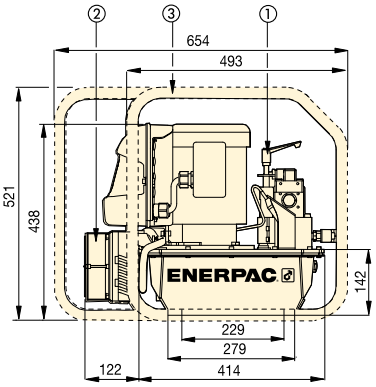

① User adjustable relief valve
② Heat exchanger (optional)
③ Roll cage (optional)

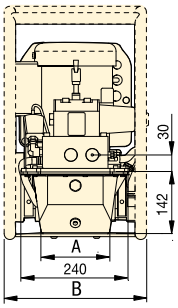

Reservoir Capacity (litres)	A (mm)	B (mm)
4,6	152	330
6,8	206	330
19,8	422	488

ZE4T and ZE5T-Series

▼ PERFORMANCE CHART

Pump Series	Output Flow Rate at 50 Hz (l/min) 7 bar	50 bar	350 bar	700 bar	Motor Size (kW)	Relief Valve Adjustment Range (bar)	Sound Level (dBA)
ZE4T	8,8	8,1	0,9	0,8	1,1	70 - 700	75
ZE5T	11,8	11,2	1,7	1,6	2,2	70 - 700	75

For Use With Wrenches	Model Number [1]	Reservoir Capacity (litres)	Factory Installed Accessories: Heat Exchanger	Roll Cage	4-Wrench Manifold	(kg)
All Series	ZE4204TE-QR (B)	4,6		●		54
	ZE4204TE-QHR (B)	4,6	●	●		59
	ZE4208TE-QHR (B)	6,8	●	●		61
	ZE4208TE-QHMR (B)	6,8	●	●	●	64
All Series	ZE5204TW-QHR (G, J)	4,6	●	●		64
	ZE5208TW-QHR (G, J)	6,8	●	●		67
	ZE5208TW-QHMR (G, J)	6,8	●	●	●	70
	ZE5220TW-QHR (G, J)	19,8	●	●		88

[1] "**B**" suffix model numbers shown are 115 VAC, 1-phase, 50/60 Hz. Model number order example: **ZE4204TB-QR**.
"**E**" indicates pump available in 208-240 VAC, 1 phase, 50/60 Hz with European plug and CE EMC compliant.
"**J**" indicates pump available in 460-480 VAC, 3-phase, 50/60 Hz. Model number order example: **ZE5208TJ-QHR**.
"**G**" indicates pump available in 208-240 VAC, 3-phase, 50/60 Hz. Model number order example: **ZE5208TG-QHR**.
"**W**" indicates pump available in 380-415 VAC, 3-phase, 50/60 Hz. Model number order example: **ZE5208TW-QHR**.



Torque Wrench Pump Selection Matrix
For optimum speed and performance see the torque wrench pump and hose selection matrix.
Page: 265



Accessories
Descriptions can be found in the ZU4T-Series pump section.
Page: 274



Torque Wrench Hoses
Use Enerpac 700 bar THQ-Series torque wrench hoses with torque wrenches and pumps.

2 m long, 2 hoses	THQ702T
6 m long, 2 hoses	THQ706T
12 m long, 2 hoses	THQ712T

LAT-Series, Air Hydraulic Torque Pump

ENERPAC

▼ LA2504TX-QR, Air-Driven Hydraulic Torque Pump



Lightweight and Compact

Improved Operator Efficiency and Ergonomics

- Easy to lift, transport and maneuver
- Hand carry where no crane, hoist or elevator is available
- One person transport up ladders and stairs
- Ideal for use on narrow or constrained scaffolding, catwalks, pipe racks and lifts.

High Productivity

- Proven 3 piston design provides leading fastening and breakout speed to stay on time and under budget
- ATEX certified to meet worksite compliance requirements.

Reduce Equipment Downtime

- Roll cage with reinforcement to support and protect FRL
- Rugged 1/2" NPTF air supply connection with integrated roll cage support
- Key components are easy to access and service.

Standard Features

- 4,5 m pendant cord for mobility around work site
- 100 mm calibrated gauge with certificate, scale in bar and psi
- Roll cage and Filter-Regulator-Lubricator (FRL).



Torque Pump Selection Matrix

For optimum speed and performance see the torque wrench and pump matrix.

Page: 265



Torque Wrench Hoses

Use Enerpac THQ-Series hoses with torque pumps to ensure the integrity of your hydraulic system.

For 700 bar	Model Nr.
2 m long, 2 hoses	THQ702T
6 m long, 2 hoses	THQ706T
12 m long, 2 hoses	THQ712T

Page: 249

ATEX Certified

The LAT-Series air-driven pumps are tested and certified according to the ATEX Directive 2014/34/EU.

The explosion protection is for Equipment Group II, Equipment Category 2 (Hazardous Area Zone 1), in Gas and/or Dust atmospheres.

Each LAT-Series air-driven pump contains the following markings:
Ex IIC T4 Gc and **Ex IIIC T135°C Dc**

IIC T4 Gc
IIIC T135°C Dc

Air-Driven Hydraulic Torque Pump

LAT-Series
Air-Driven Torque Pump

The Enerpac LAT Air-Driven Torque Pump combines compact design and high productivity for bolting applications in areas hard to access with larger air powered pumps.

Whether on an offshore platform, refinery or mine anywhere in the world, the pump is built for the toughest worksite environments.

Featuring a proven Enerpac piston design, reinforced FRL support and air supply connection, the LAT-pump will provide years of reliable service with fastening and breakout speeds to keep you on schedule and under budget.

LAT Series



Reservoir Capacity:
3,0 litres

Flow at Rated Pressure:
0,4 l/min

Maximum Operating Pressure:
700 bar

▼ Rugged 1/2" NPTF air supply connection with integrated roll cage support.



▼ Roll cage design supports and protects Filter-Regulator-Lubricator (FRL).



OIL FLOW vs. PRESSURE

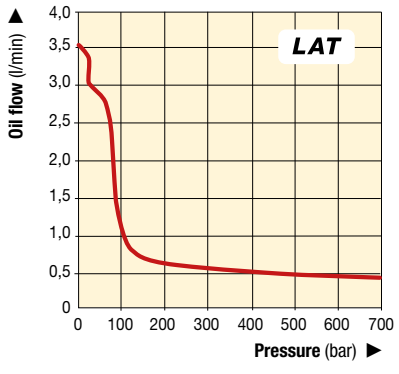

▼ Proven 3 piston design provides leading speed.



▼ Skid Rail accessory **DD8365920K** bolts to bottom of reservoir to prevent wear from rough surfaces.



▼ *LAT-Series, the portable and compact torque pump.*



Usable Oil Capacity (litres)	Model Number *	Output Flow Rate (l/min) No Load	350 bar	700 bar	Valve Type	Air Pressure Range (bar)	Air Consumption (l/min)	Sound Level (dBA)	Dimensions (mm) Length	Width	Height	(kg)
1,9	**LA2504TX-QR**	3,5	0,6	0,4	4-way, 2-pos.	4,5 - 6,9	1389	87 - 90	435	250	375	18,0

* Enerpac Spin-On couplers are included. Pump hydraulic port thread size is 1/4"-18 NPTF.

ZA4T-Series, Air Driven Torque Pumps

ENERPAC

▼ ZA4204TX-QR



Tough, Dependable Innovative
CLASS

ZA4208TX-QRU105 Complete Set with Pump, Hose THQ706T and Roll Cage:

- **Fine air pressure adjustment for very accurate torque control**
- **High bypass pressure (180 bar) for faster torque cycles**
- **Improved wrench performance at low pressure**

Standard ZA4T-pump models:

- **Two-speed operation and 100 bar by-pass pressure reduces cycle time for improved productivity**
- **Glycerin filled pressure gauge with transparent overlays in Nm and Ft.lbs for Enerpac torque wrenches provide a quick torque reference**
- **Standard Regulator-Filter-Lubricator with removable bowls and auto drain**
- **Heat exchanger warms exhaust air to prevent freezing and cools the oil**
- **Ergonomic pendant allows remote operation up to 6 m.**



Gauge with Overlay Kit

Gauge Overlay Kits are available separately for use with ZA4T-Series pumps:

GT4015Q includes gauge and overlays for all Enerpac all S, W, RSL, DSX and HMT-Series torque wrenches.



Torque Pump Selection Matrix

For optimum speed and performance see the torque pump selection matrix.

Page: 265



Torque Wrench Hoses

Use Enerpac THQ-Series hoses with torque pumps to ensure the integrity of your hydraulic system.

For 700 bar	Model Nr.
2 m long, 2 hoses	THQ702T
6 m long, 2 hoses	THQ706T
12 m long, 2 hoses	THQ712T

Page: 249



◀ *Most hydraulic torque wrenches can be powered by the Enerpac ZA4T-Series torque pumps.*

Tel: +45 63 12 83 00 | Email: ps@hymatik.com | www.hymatik.com | Hvidkaervej 27a, DK-5250 Odense SV, Denmark

Air Driven Torque Pumps

ZA4T-Pump Applications

The ZA4T-Series pump is best suited to power medium to large size torque wrenches.

Patent-pending Z-Class technology provides high by-pass pressures for increased productivity.

Its high power to weight ratio and compact design make it ideal for applications which require easy transport of the pump.

All ZA4T-Series pump models meet CE, CSA and TÜV safety requirements. For further application assistance contact your local Enerpac office.

ATEX 95 Certified

The ZA4T-Series pumps are tested and certified according to the Equipment Directive 94 / 9 / EC "ATEX Directive".

The explosion protection is for Equipment Group II, Equipment Category 2 (Hazardous Area Zone 1), in Gas and/or Dust atmospheres. The ZA4T-Series pumps are marked with: **Ex II 2 GD ck T4**.

Ex II 2 GD ck T4
DEKRA 0602

ZA4T Series



Reservoir Capacity:
4,6 - 6,8 litres

Flow at Rated Pressure:
1,0 l/min

Air Consumption:
600 - 2840 l/min

Maximum Operating Pressure:
700 bar

OIL FLOW VERSUS PRESSURE

6,9 bar dynamic air pressure at 2840 l/min

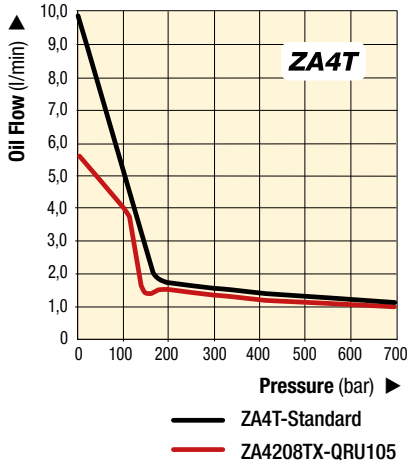

Accessory Options

Available by placing the following additional suffix at the end of the model number:

K = Skid bar
M = 4-wrench manifold
R = Roll cage.

Page: 282

▼ *ZA4208TX-QRU105 for improved wrench performance and torque control at low pressure.*



▼ **COMMON PUMP MODELS**

For Use With Torque Wrenches	Maximum Operating Pressure (bar)	Model Number	Reservoir Capacity (litres)	(kg)
all S, W, RSL, DSX and HMT-Series	**700**	**ZA4208TX-QRU105 ***	6,8	45
	700	**ZA4204TX-Q**	4,6	42
	700	**ZA4208TX-Q**	6,8	47
	700	**ZA4204TX-QR ****	4,6	46
	700	**ZA4208TX-QR ****	6,8	51

* Standard with roll cage, with THQ706T hose and fine air pressure adjustment for very accurate torque control. Pump weight 45 kg, complete set including hose weight 58 kg.

** With Roll Cage.

ZA4T-Series, Pump Options

ENERPAC



Skid Bar

- **Provides greater pump stability on soft or uneven surfaces**
- **Provides easy two-handed lift.**

Accessory Kit * Model Nr.	Can be used on ZA4T-Series torque pumps
SBZ-4	Reservoir 04 and 08

* Add suffix **K** for factory installation.
Weight skid bar 2,2 kg.
Ordering Example: ZA4208TX-QK



4-Wrench Manifold

- **For simultaneous operation of multiple torque wrenches**
- **Can be factory installed or ordered separately.**

Accessory Kit * Model Nr.	Can be used on ZA4T-Series torque pumps
ZTM-Q	for 700 bar torque wrenches

* Add suffix **M** for factory installation. This option cannot be installed onto the ZA4208TX-QRU105 pump, as the valve manifold is different.
Weight manifold 4,5 kg.
Ordering Example: ZA4208TX-QM



Roll Cage

- **Protects pump**
- **Provides greater pump stability.**

Accessory Kit * Model Nr.	Can be used on ZA4T-Series torque pumps
ZRC-04	Reservoir 04 and 08

* Add suffix **R** for factory installation.
Roll cage weight 3,4 kg.
Ordering Example: ZA4208TX-QR



Torque Wrench Couplers

For Enerpac torque wrench couplers see our "System Components" section in this catalogue.

Page: 130



PowaPak™ Air Torque Pump

ZA4208TX-QR0P Pump with Stainless Steel Roll Cage and Certified Lifting Eye.

Page: 284



Torque Wrench Hoses

Use Enerpac twin safety hoses to connect your torque wrench to the pump.

For 700 bar	Model-Nr.
2 m long, 2 hoses	THQ702T
6 m long, 2 hoses	THQ706T
12 m long, 2 hoses	THQ712T

Tel: +45 63 12 83 00 | Email: ps@hymatik.com | www.hymatik.com | Hvidkaervej 27a, DK-5250 Odense SV, Denmark

Ordering Matrix and Specifications

▼ This is how a ZA4T-Series pump model number is built up:

Z	A	4	2	08	T	X	-	Q	M	R
1 Product Type	2 Motor Type	3 Flow Group	4 Valve Type	5 Reservoir Size	6 Valve Operation	7 Voltage		8 Must be Q	8 Options	8 Options

1 Product Type
Z = Pump series

2 Motor Type
A = Air motor

3 Flow Group
4 = 1,0 l/min @ 700 bar

4 Valve Type
2 = Torque Wrench Valve

5 Reservoir Size
04 = 4,6 litres
08 = 6,8 litres

6 Valve Operation
T = Air operated valve with pendant

7 Voltage
X = Not applicable

8 Options
Q = 700 bar couplers for use with Enerpac or other torque wrenches
K = Skid bar
M = 4-wrench manifold
R = Roll cage

ZA4T Series



Reservoir Capacity:
4,6 - 6,8 litres

Flow at Rated Pressure:
1,0 l/min

Air Consumption:
600 - 2840 l/min

Maximum Operating Pressure:
700 bar

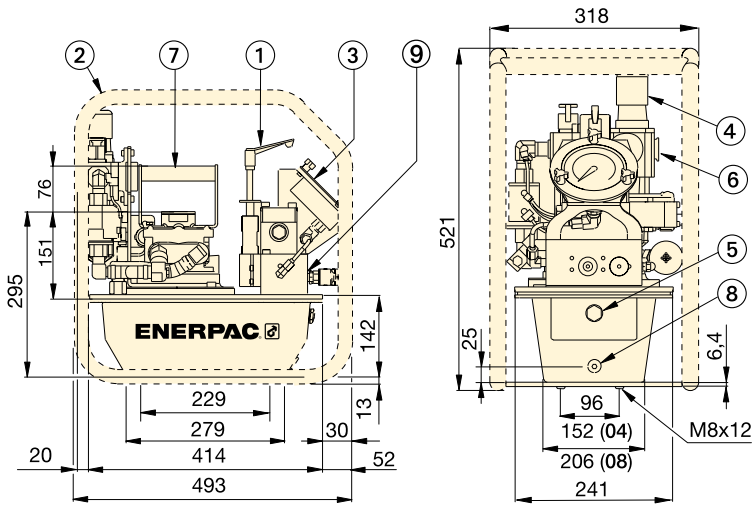

① User adjustable relief valve
② Roll Cage (optional)
③ Gauge with overlays
④ Filter/lubricator/regulator
⑤ Oil level sight gauge
⑥ Air input 1/2" NPTF
⑦ Standard handle
⑧ Oil drain
⑨ 1/4"-18 NPTF Oil outlet

How to order your ZA4T-Series torque pump

Model No. ZA4208TX-QMR

700 bar pump for use with Enerpac S-, W-, RSL, DSX and HMT-Series and other 700 bar torque wrenches, 6,8 litres reservoir,4-wrench manifold, and roll cage.



Torque Pump Selection Matrix

For optimum speed and performance see the torque wrench and pump matrix.

Page: 265

ZA4T-Series Performance

Pump Model	Output Flow Rate (l/min) 7 bar	50 bar	350 bar	700 bar	By-pass pressure (bar)	Dynamic Air Pressure Range (bar)	Air Consumption (l/min)	Sound Level (dBA)	Relief Valve Adjustment Range (bar)
ZA4208TX-QRU105	5,7	4,5	1,4	1,0	180	7,0	600 - 2840	85-90	124 - 700
ZA4T Standard	9,8	8,2	1,4	1,0	100	4,0 - 6,9	600 - 2840	85-90	124 - 700

ZA4T-Series, PowaPak™ Air Torque Pump

ENERPAC

▼ ZA4208TX-QR0P



New ZA4T with Stainless Steel Roll Cage and Certified Lifting Eye

- Stainless-Steel Roll Cage resists corrosion
- Certified Lifting Eye for transporting pump between levels
- Two-speed operation and high by-pass pressure reduces cycle time for improved productivity
- Integrated heat exchanger warms exhaust air to prevent freezing and cools the oil
- Fine hydraulic pressure adjustment for accurate torque control
- Improved wrench speed at low hydraulic pressure due to the expanded 1st stage bypass setting
- Pendant allows operation up to 6 metres (20 ft)
- Filter-Regulator-Lubricator with removable bowls and auto drain is standard
- Calibrated, glycerin filled gauge with display in bar and psi
- ATEX-tested and certified.



Torque Pump Selection Matrix

For optimum speed and performance see the torque wrench pump selection matrix.

Page: 265



Torque Wrench Hoses

Use Enerpac THQ700-Series hoses with torque wrenches to ensure the integrity of your hydraulic system.

For 700 bar	Model-Nr.
2 m long, 2 hoses	THQ702T
6 m long, 2 hoses	THQ706T
12 m long, 2 hoses	THQ712T

▼ *Certified lifting eye.*



Tel: +45 63 12 83 00 | Email: ps@hymatik.com | www.hymatik.com | Hvidkaervej 27a, DK-5250 Odense SV, Denmark

PowaPak™ Air Torque Pump

PowaPak™ Air Torque Pump

The ZA4208TX-QR0P was developed for the high demands of the oil and gas, chemical processing, rental and other industrial markets.
The stainless-steel roll cage resists corrosion and surface damage reducing the maintenance required to prepare the pump for the next job.
The certified lifting eye enables the pump to be transported between levels with a lifting hook avoiding time consuming strapping.

ATEX-Certified

The ZA4T air-driven torque pump is tested and certified according to the ATEX Directive 2014/34/EU.
The explosion protection is for Equipment Group II, Equipment Category 2 (Hazardous Area Zone 1), in Gas and /or Dust atmospheres.
Each pump contains the following markings:
Ex IIC T4 Gc
Ex IIIC T135°C Dc

CE

ZA4T Series



Reservoir Capacity:
6,8 litres

Flow at Rated Pressure:
1,0 l/min

Air Consumption:
600 - 2840 l/min

Maximum Operating Pressure:
700 bar

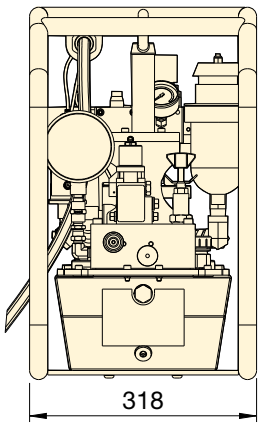

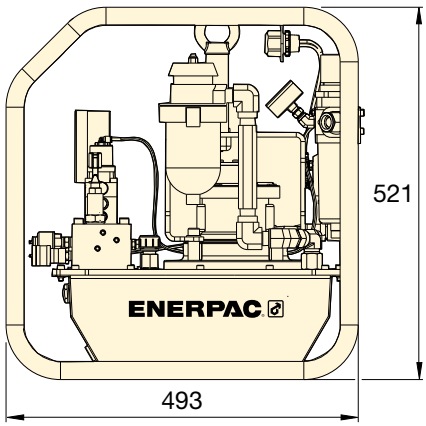

Maximum Operating Pressure (bar)	Model Number	Reservoir Capacity (litres)	Output Flow Rate (l/min) 7 bar	350 bar	700 bar	Dynamic Air Pressure Range (bar)	Air Consumption (l/min)	(kg)
700	**ZA4208TX-QR0P**	6,8	5,7	1,3	1,0	4,1-6,9	600-2840	52

OIL FLOW VERSUS PRESSURE

6,9 bar dynamic air pressure at 2840 l/min

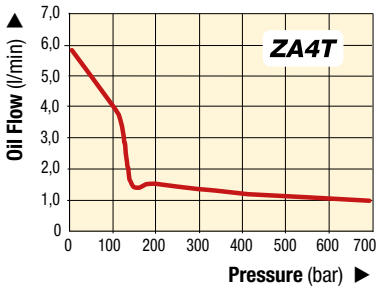

Bolting Integrity Software

Enerpac Bolting Integrity Software Solutions play a key role in implementing and managing an Integrity Program for bolted connections.

The software offers Tool selection, Bolt Load calculations and Tool pressure settings, as well as, a combined Application Data Sheet and Joint Completion Report.

Custom Joint information can also be entered.

Page: 412

HM-Series, HydraMax® Topside Tensioners

ENERPAC

▼ HM10 Hydramax® Topside Tensioner



High Bolt Load Capacities, Superior Performance

- Fifteen load cells from ¾" to 4" / M20 to M100
- Twin ports for quick connection of multiple tools
- High bolt load capacity at max. 1500 bar (21.750 psi)
- Long stroke capability of 15 mm (9/16 inch) with over stroke elimination
- HM01 to HM05: mechanical over-stroke prevention, no spring assist; HM06 to HM15: relief valve for over-stroke prevention, spring assist
- Quick release bridge
- Stroke indicator
- Captive socket – eliminates falling object risk
- Interchangeable adapter kits available
- Anti-slip grip for more secure handling
- HM-Series HydraMax® Tensioners comply to following: Machine Directive 2006/42/EC, ASME B30.1, EN-ISO 4413:2010 and EN-ISO 12100:2010.

HydraMax® Topside Tensioners

The HM-Series tensioners have been designed to fit all standard flanges, including ANSI, API and Compact flanges based on Norsok L005 and generates 30% more load capacity than traditional tensioners.



Tensioning Pumps, Hoses and Couplers

High pressure pumps, hoses and fittings matched for use with the Enerpac Bolt Tensioners.

Page: 211

Ultra-high Pressure

This tool operates at ultra-high pressure, use only the specified fittings and hoses designed for these pressures.

Page: 301

How to Order HydraMax® Tensioners

To provide maximum flexibility Load Cells are ordered separately from Adaptor and Bridge Kits.
Example, to order a complete tensioner for a M24 x 3 threaded bolt order:
1 x Load Cell with tommy bar: **HM03-LC**
1 x Adaptor and Bridge Kit: **HM03BPM-NRS02430**

Bolting Integrity Software

The software offers Tool selection, Bolt Load calculations and Tool pressure settings, as well as, a combined Application data sheet and Joint completion report. Custom Joint information can also be entered.

Page: 412



◀ *Enerpac HM-Series HydraMax® tensioners have been designed to generate high bolt loads associated with compact flanges, while providing versatility for maximum bolt coverage,*

HydraMax® Topside Tensioners

Thread and Pitch Sizes

Contact Enerpac for different thread or pitch sizes. Alternative size adaptor kits can be supplied upon request.

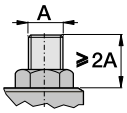

Minimum Stud Protrusion

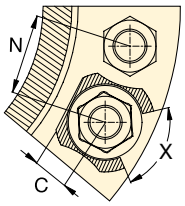

X = Minimum socket rotation 60°

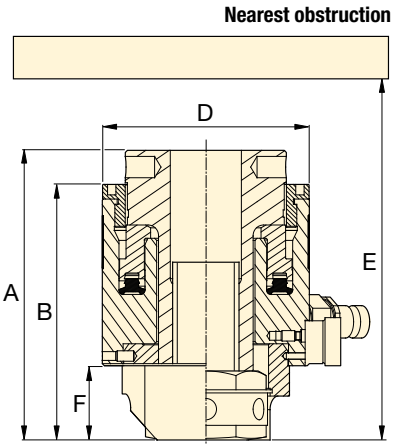

HM Series



Bolt Range:
M20 - M39, ¾ - 1½"

Maximum Load Capacity:
134 - 624 kN

Stroke:
10 - 15 mm *

Maximum Operating Pressure:
1500 bar

* Stroke HM01 models 10 mm
Strokes all other HM-models 15 mm.

Load Cell Model Number *	Thread Size	Adaptor and Bridge Kit Model Number	Cylinder Effective Area (mm²)	Maximum Load Capacity (kN)	Dimensions (mm) A	B	C	D	E min.	F	N min.	Load Cell Weight (kg)	Adaptor and Bridge Kit Weight (kg)
HM01-LC	M20 x 2,5	HM01BPM-NRS02025	894	134,0	112	96	15	61	208	28	51	1,6	0,6
	¾"- 10UN	HM01BP-NRS0750U10	894	134,0	112	96	15	61	208	28	51	1,6	0,6
HM02-LC	M20 x 2,5	HM02BPM-NRS02025	1240	186,0	119	103	15	69	227	28	53	1,8	0,9
	M22 x 2,5	HM02BPM-NRS02225	1240	186,0	119	103	18	69	225	28	54	1,8	0,9
	¾"- 10UN	HM02BP-NRS0750U10	1240	186,0	119	103	15	69	227	28	52	1,8	0,9
	⅞"-9UN	HM02BP-NRS0875U09	1240	186,0	119	103	18	69	225	28	56	1,8	0,8
HM03-LC	M20 x 2,5	HM03BPM-NRS02025	1628	244,1	120	105	15	77	230	28	57	2,2	1,1
	M22 x 2,5	HM03BPM-NRS02225	1628	244,1	120	105	18	77	228	28	58	2,2	1,1
	M24 x 3	HM03BPM-NRS02430	1628	244,1	120	110	20	77	232	33	59	2,2	1,1
	¾"- 10UN	HM03BP-NRS0750U10	1628	244,1	120	105	15	77	230	28	56	2,2	1,1
	⅞"- 9UN	HM03BP-NRS0875U09	1628	244,1	120	105	18	77	228	28	58	2,2	1,1
	1"- 8UN	HM03BP-NRS1000U08	1628	244,1	125	110	20	77	232	33	60	2,2	1,1
HM04-LC	M22 x 2,5	HM04BPM-NRS02225	2159	323,8	128	112	18	90	250	28	62	2,7	1,6
	M24 x 3	HM04BPM-NRS02430	2159	323,8	129	117	20	90	255	33	63	2,7	1,6
	M27 x 3	HM04BPM-NRS02730	2159	323,8	134	117	20	90	256	34	65	2,7	1,7
	M30 x 3,5	HM04BPM-NRS03035	2159	323,8	137	120	23	90	257	36	66	2,7	1,7
	⅞"- 9UN	HM04BP-NRS0875U09	2159	323,8	129	112	18	90	250	28	62	2,7	1,6
	1"- 8UN	HM04BP-NRS1000U08	2159	323,8	134	117	20	90	255	33	64	2,7	1,7
	1⅛"- 8UN	HM04BP-NRS1125U08	2159	323,8	137	120	23	90	257	36	65	2,7	1,7
HM05-LC	M24 x 3	HM05BPM-NRS02430	2752	412,7	131	119	20	99	263	33	68	3,3	1,9
	M27 x 3	HM05BPM-NRS02730	2752	412,7	136	119	20	99	263	34	69	3,3	2,0
	M30 x 3,5	HM05BPM-NRS03035	2752	412,7	139	122	23	99	261	36	71	3,3	2,0
	M33 x 3,5	HM05BPM-NRS03335	2752	412,7	142	125	27	99	262	39	72	3,3	2,1
	1"-8UN	HM05BP-NRS1000U08	2752	412,7	136	119	20	99	263	33	68	3,3	2,1
	1⅛"-8UN	HM05BP-NRS1125U08	2752	412,7	139	122	23	99	261	36	70	3,3	2,1
	1¼"-8UN	HM05BP-NRS1250U08	2752	412,7	142	125	27	99	262	39	71	3,3	2,1
HM06-LC	M30 x 3,5	HM06BPM-NRS03035	4162	624,1	143	125	23	118	266	36	80	4,5	2,8
	M33 x 3,5	HM06BPM-NRS03335	4162	624,1	146	128	27	118	269	39	82	4,5	2,9
	M36 x 4	HM06BPM-NRS03640	4162	624,1	149	131	32	118	273	42	83	4,5	3,0
	M39 x 4	HM06BPM-NRS03940	4162	624,1	152	134	33	118	277	45	85	4,5	3,1
	1⅛"- 8UN	HM06BP-NRS1125U08	4162	624,1	143	125	23	118	266	36	79	4,5	2,8
	1¼"- 8UN	HM06BP-NRS1250U08	4162	624,1	146	128	27	118	269	39	81	4,5	2,9
	1⅜"- 8UN	HM06BP-NRS1375U08	4162	624,1	149	131	32	118	273	32	82	4,5	3,0
	1½"- 8UN	HM06BP-NRS1500U08	4162	624,1	152	134	33	118	277	45	84	4,5	3,1

* Tommy Bar is included with Load Cell.

HM-Series, HydraMax® Topside Tensioners

ENERPAC

Thread and Pitch Sizes

Contact Enerpac for different thread or pitch sizes. Alternative size adaptor kits can be supplied upon request.

HM Series



Bolt Range:
M33 - M52, 1¼ - 2"

Maximum Load Capacity:
746 - 1179 kN

Stroke:
15 mm

Maximum Operating Pressure:
1500 bar

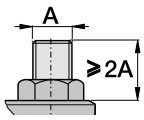

Minimum Stud Protrusion

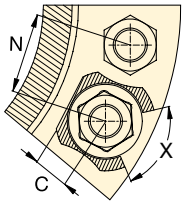

X = Minimum socket rotation 60°

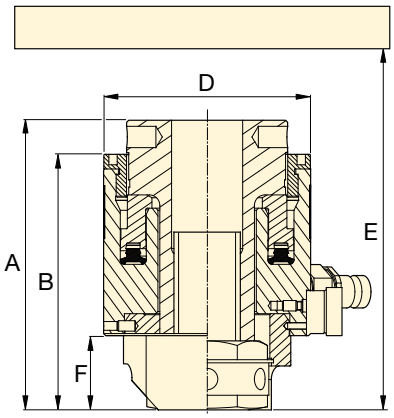

Load Cell Model Number *	Thread Size	Adaptor and Bridge Kit Model Number	Cylinder Effective Area	Maximum Load Capacity	Dimensions (mm)							Load Cell Weight	Adaptor and Bridge Kit Weight
					A	B	C	D	E min.	F	N min.		
			(mm^2)	(kN)								(kg)	(kg)
HM07-LC	M33 x 3,5	HM07BPM-NRS03335	4980	746,8	145	128	27	127	278	39	86	5,2	3,4
	M36 x 4	HM07BPM-NRS03640	4980	746,8	148	131	32	127	279	42	88	5,2	3,5
	M39 x 4	HM07BPM-NRS03940	4980	746,8	151	134	33	127	280	45	89	5,2	3,6
	M42 x 4,5	HM07BPM-NRS04245	4980	746,8	154	137	34	127	280	48	91	5,2	3,7
	1¼"- 8UN	HM07BP-NRS1250U08	4980	746,8	145	128	27	127	278	39	85	5,2	3,4
	1⅜"- 8UN	HM07BP-NRS1375U08	4980	746,8	148	131	32	127	279	42	87	5,2	3,5
	1½"- 8UN	HM07BP-NRS1500U08	4980	746,8	151	134	33	127	280	45	89	5,2	3,6
	1⅝"- 8UN	HM07BP-NRS1625U08	4980	746,8	154	137	34	127	280	48	90	5,2	3,7
HM08-LC	M36 x 4	HM08BPM-NRS03640	5869	880,1	149	133	32	137	283	42	93	6,3	3,9
	M39 x 4	HM08BPM-NRS03940	5869	880,1	152	136	33	137	284	45	94	6,3	4,0
	M42 x 4,5	HM08BPM-NRS04245	5869	880,1	155	139	34	137	284	48	96	6,3	4,1
	M45 x 4,5	HM08BPM-NRS04545	5869	880,1	158	142	39	137	285	51	97	6,3	4,4
	1⅜"- 8UN	HM08BP-NRS1375U08	5869	880,1	149	133	32	137	283	42	92	6,3	3,9
	1½"- 8UN	HM08BP-NRS1500U08	5869	880,1	152	136	33	137	284	45	94	6,3	4,0
	1⅝"- 8UN	HM08BP-NRS1625U08	5869	880,1	155	139	34	137	284	48	95	6,3	4,1
	1¾"- 8UN	HM08BP-NRS1750U08	5869	880,1	158	142	39	137	285	51	97	6,3	4,4
HM09-LC	M39 x 4	HM09BPM-NRS03940	6834	1024,9	152	136	33	145	278	45	98	6,5	5,0
	M42 x 4,5	HM09BPM-NRS04245	6834	1024,9	155	139	34	145	281	48	100	6,5	6,1
	M45 x 4,5	HM09BPM-NRS04545	6834	1024,9	158	142	39	145	285	51	101	6,5	5,1
	M48 x 5	HM09BPM-NRS04850	6834	1024,9	161	145	43	145	288	54	103	6,5	5,5
	1½"- 8UN	HM09BP-NRS1500U08	6834	1024,9	152	136	33	145	278	45	98	6,5	5,1
	1⅝"- 8UN	HM09BP-NRS1625U08	6834	1024,9	155	139	34	145	281	48	99	6,5	5,1
	1¾"- 8UN	HM09BP-NRS1750U08	6834	1024,9	158	142	39	145	285	51	101	6,5	5,0
	1⅞"- 8UN	HM09BP-NRS1875U08	6834	1024,9	161	145	43	145	288	54	102	6,5	5,4
HM10-LC	M42 x 4,5	HM10BPM-NRS04245	7868	1179,8	159	143	34	156	289	48	105	8,3	5,7
	M45 x 4,5	HM10BPM-NRS04545	7868	1179,8	162	146	39	156	293	51	107	8,3	5,7
	M48 x 5	HM10BPM-NRS04850	7868	1179,8	165	149	43	156	296	54	108	8,3	6,1
	M52 x 5	HM10BPM-NRS05250	7868	1179,8	169	153	44	156	301	58	110	8,3	6,3
	1⅝"- 8UN	HM10BP-NRS1625U08	7868	1179,8	159	143	34	156	289	48	105	8,3	5,7
	1¾"- 8UN	HM10BP-NRS1750U08	7868	1179,8	162	146	39	156	293	51	106	8,3	5,6
	1⅞"- 8UN	HM10BP-NRS1875U08	7868	1179,8	165	149	43	156	296	54	108	8,3	6,0
	2"- 8UN	HM10BP-NRS2000U08	7868	1179,8	169	153	44	156	301	58	109	8,3	6,3

* Load Cell with Tommy Bar.

HydraMax® Topside Tensioners

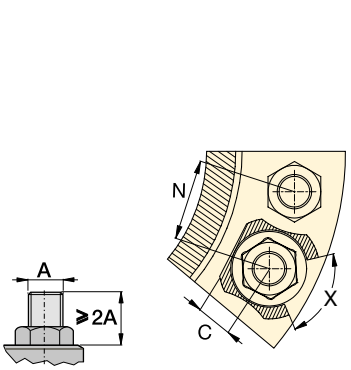

Minimum Stud Protrusion

X = Minimum socket rotation 60°

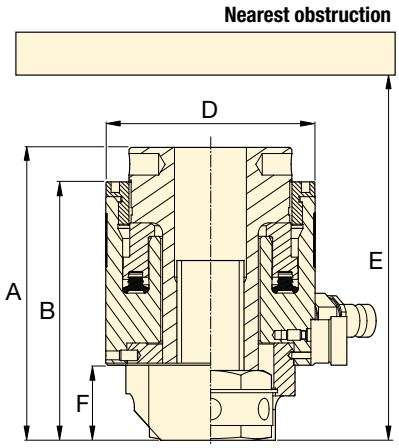

HM Series



Bolt Range:
M45 - M100, 1¾ - 4"

Maximum Load Capacity at 1500 bar:
1522 - 4650 kN

Stroke:
15 mm

Load Cell Model Number *	Thread Size **	Adaptor and Bridge Kit Model Number	Cylinder Effective Area	Maximum Load Capacity	Dimensions (mm)							Load Cell Weight	Adaptor and Bridge Kit Weight
			(mm^2)	(kN)	A	B	C	D	E min.	F	N min.	(kg)	(kg)
HM11-LC	M45 x 4,5	HM11BPM-NRS04545	10152	1522,5	167	146	39	175	297	51	116	10,5	7,4
	M48 x 5	HM11BPM-NRS04850	10152	1522,5	170	149	43	175	301	54	118	10,5	7,9
	M52 x 5	HM11BPM-NRS05250	10152	1522,5	174	153	44	175	306	58	120	10,5	8,1
	M56 x 5,5	HM11BPM-NRS05655	10152	1522,5	182	161	50	175	318	66	122	10,5	9,1
	M60 x 5,5	HM11BPM-NRS06055	10152	1522,5	182	161	50	175	323	66	124	10,5	8,7
	1¾"- 8UN	HM11BP-NRS1750U08	10152	1522,5	167	146	39	175	297	51	116	10,5	7,5
	1⅞"- 8UN	HM11BP-NRS1875U08	10152	1522,5	170	149	43	175	301	54	117	10,5	7,9
	2"- 8UN	HM11BP-NRS2000U08	10152	1522,5	174	153	44	175	306	58	119	10,5	8,1
	2¼"- 8UN	HM11BP-NRS2250U08	10152	1522,5	182	161	50	175	318	66	122	10,5	8,8
HM12-LC	M48 x 5	HM12BPM-NRS04850	12722	1907,7	170	149	43	194	301	54	127	13,3	9,7
	M52 x 5	HM12BPM-NRS05250	12722	1907,7	174	153	44	194	306	58	129	13,3	9,8
	M56 x 5,5	HM12BPM-NRS05655	12722	1907,7	182	161	50	194	318	66	131	13,3	10,7
	M60 x 5,5	HM12BPM-NRS06055	12722	1907,7	182	161	50	194	323	66	133	13,3	10,4
	M64 x 6	HM12BPM-NRS06460	12722	1907,7	186	165	56	194	320	70	135	13,3	11,1
	1⅞"- 8UN	HM12BP-NRS1875U08	12722	1907,7	170	149	43	194	301	54	127	13,3	9,6
	2"- 8UN	HM12BP-NRS2000U08	12722	1907,7	174	153	44	194	306	58	128	13,3	9,8
	2¼"- 8UN	HM12BP-NRS2250U08	12722	1907,7	182	161	50	194	318	66	132	13,3	10,4
	2½"- 8UN	HM12BP-NRS2500U08	12722	1907,7	186	165	56	194	320	70	135	13,3	10,8
HM13-LC	M64 x 6	HM13BPM-NRS06460	16964	2544,0	195	172	56	219	337	70	148	17,6	14,5
	M68 x 6	HM13BPM-NRS06860	16964	2544,0	195	180	63	219	350	78	150	17,6	16,5
	M72 x 6	HM13BPM-NRS07260	16964	2544,0	203	185	69	219	347	82	152	17,6	16,0
	M76 x 6	HM13BPM-NRS07660	16964	2544,0	207	185	69	219	352	82	154	17,6	16,3
	2½"- 8UN	HM13BP-NRS2500U08	16964	2544,0	195	172	56	219	337	70	147	17,6	14,2
	2¾"- 8UN	HM13BP-NRS2750U08	16964	2544,0	203	180	63	219	350	78	150	17,6	15,8
	3"- 8UN	HM13BP-NRS3000U08	16964	2544,0	207	185	69	219	352	82	161	17,6	15,8
HM14-LC	M72 x 6	HM14BPM-NRS07260	23451	3516,7	203	185	69	259	351	82	172	25,8	20,8
	M76 x 6	HM14BPM-NRS07660	23451	3516,7	207	185	69	259	352	82	174	25,8	21,3
	M80 x 6	HM14BPM-NRS08060	23451	3516,7	207	193	70	259	367	91	176	25,8	21,2
	M85 x 6	HM14BPM-NRS08560	23451	3516,7	216	193	70	259	374	91	178	25,8	22,9
	M90 x 6	HM14BPM-NRS09060	23451	3516,7	221	198	79	259	389	96	181	25,8	23,3
	3"- 8UN	HM14BP-NRS3000U08	23451	3516,7	207	185	69	259	352	82	174	25,8	20,4
	3¼"- 8UN	HM14BP-NRS3250U08	23451	3516,7	216	193	70	259	374	91	177	25,8	22,7
	3½"- 8UN	HM14BP-NRS3500U08	23451	3516,7	221	198	79	259	389	96	184	25,8	23,9
HM15-LC	M90 x 6	HM15BPM-NRS09060	31008	4650,0	221	199	79	296	389	96	199	32,5	30,0
	M95 x 6	HM15BPM-NRS09560	31008	4650,0	226	205	81	296	405	101	202	32,5	33,7
	M100 x 6	HM15BPM-NRS10060	31008	4650,0	232	211	90	296	421	107	204	32,5	35,1
	3½"- 8UN	HM15BP-NRS3500U08	31008	4650,0	221	199	79	296	389	96	198	32,5	29,5
	3¾"- 8UN	HM15BP-NRS3750U08	31008	4650,0	226	205	81	296	405	101	202	32,5	32,8
	4"- 8UN	HM15BP-NRS4000U08	31008	4650,0	232	211	90	296	421	107	210	32,5	34,0

* Load Cell with Tommy Bar.

** Contact Enerpac for different thread or pitch sizes. Alternative size adaptor kits can be supplied upon request.

GT-Series, Topside Bolt Tensioners

ENERPAC

▼ Shown: **GT-Series Topside Bolt Tensioners**



Accurate & Reliable Extreme Performance Bolt Tensioners

- **Seven load cells from M16 to M105 or from ⅝" to 4"**
- **Twin ports for quick connection of multiple tools**
- **Only one size of bridge per size of load cell**
- **Detachable and rotational bridge simplifies tool positioning**
- **Full bridge window – increased access to socket**
- **Captive socket – eliminates falling object risk**
- **Piston stroke indicator**
- **Black surface treatment protects against corrosion**
- **Anti-slip grip for more secure handling**
- **Universal and multi-use tool**
- **GT-Series Tensioners comply to Machine Directive 2006/42/CE, ASME B30.1, EN-ISO 4413:2010 and EN-ISO 12100:2010.**



Tensioning Pumps, Hoses and Couplers

High pressure pumps, hoses and fittings matched for use with the Enerpac Bolt Tensioners.

Page: 301

Bolting Integrity Software

The software offers Tool selection, Bolt Load calculations and Tool pressure settings, as well as, a combined Application data sheet and Joint completion report. Custom Joint information can also be entered.

Page: 412

How to Order

To provide maximum flexibility Load Cell and Bridges are ordered separately from Adaptor Kits.

Example, to order a complete tensioner for a M36 x 4 threaded bolt order:

1 x Load Cell and Bridge: **GT2-LCB**

1 x Adaptor Kit: **GT2PM-NRS03640**

Load Cell * and Bridge Model Number	Thread Size	Adaptor Kit Model Number	Cylinder Effective Area (mm^2)	Maximum Load Capacity (kN)	Dimensions (mm) A	B	C	D	E min.	F	N min.	Load Cell and Bridge Weight (kg)	Adaptor Kit Weight (kg)
GT1-LCB	M16 x 2	GT1PM-NRS01620	1495,4	224,3	135	113	27	86	243	44	57	3,0	1,6
	M18 x 2,5	GT1PM-NRS01825	1495,4	224,3	135	113	27	86	243	44	58	3,0	1,5
	M20 x 2,5	GT1PM-NRS02025	1495,4	224,3	135	113	27	86	243	44	59	3,0	1,4
	M24 x 3	GT1PM-NRS02430	1495,4	224,3	135	113	27	86	243	44	61	3,0	1,3
	M27 x 3	GT1PM-NRS02730	1495,4	224,3	135	113	27	86	243	44	64	3,0	1,2
	M30 x 3,5	GT1PM-NRS03035	1495,4	224,3	135	113	27	86	243	44	66	3,0	1,0
	⅝"- 11UN	GT1P-NRS0625U11	1495,4	224,3	135	113	27	86	243	44	57	3,0	1,6
	¾"- 10UN	GT1P-NRS0750U10	1495,4	224,3	135	113	27	86	243	44	59	3,0	1,4
	⅞"- 9UN	GT1P-NRS0875U09	1495,4	224,3	135	113	27	86	243	44	62	3,0	1,3
	1"- 8UN	GT1P-NRS1000U08	1495,4	224,3	135	113	27	86	243	44	64	3,0	1,2
	1⅛"- 8UN	GT1P-NRS1125U08	1495,4	224,3	135	113	27	86	243	44	66	3,0	1,0
GT2-LCB	M30 x 3,5	GT2PM-NRS03035	2677,2	401,5	136	111	35	107	226	41	75	4,1	2,6
	M33 x 3,5	GT2PM-NRS03335	2677,2	401,5	136	111	35	107	226	41	76	4,1	2,4
	M36 x 4	GT2PM-NRS03640	2677,2	401,5	136	111	35	107	226	41	79	4,1	2,2
	M39 x 4	GT2PM-NRS03940	2677,2	401,5	136	111	35	107	226	41	82	4,1	1,9
	1⅛"- 8UN	GT2P-NRS1125U08	2677,2	401,5	136	111	35	107	226	41	74	4,1	2,6
	1¼"- 8UN	GT2P-NRS1250U08	2677,2	401,5	136	111	35	107	226	41	76	4,1	2,4
	1⅜"- 8UN	GT2P-NRS1375U08	2677,2	401,5	136	111	35	107	226	41	79	4,1	2,2
	1½"- 8UN	GT2P-NRS1500U08	2677,2	401,5	136	111	35	107	226	41	82	4,1	2,0

* Load Cell with tommy bar.

Topside Bolt Tensioners

Thread and Pitch Sizes

Contact Enerpac for different thread or pitch sizes. Alternative size adaptor kits can be supplied upon request.

GT Series



Bolt Range:
M16 - M105, ⅝" - 4"

Maximum Load Capacity at 1500 bar:
224 - 3958 kN

Stroke:
10 mm

Maximum Operating Pressure:
1500 bar

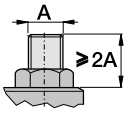

Minimum Stud Protrusion

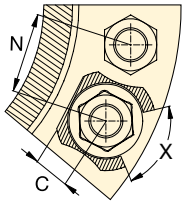

X = Minimum socket rotation 60°

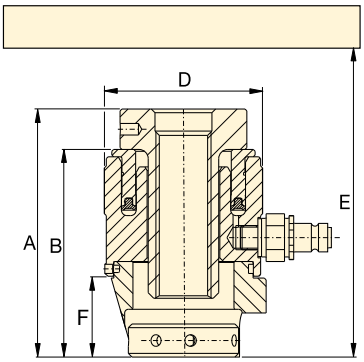

Load Cell * and Bridge Model Number	Thread Size	Adaptor Kit Model Number	Cylinder Effective Area (mm^2)	Maximum Load Capacity (kN)	Dimensions (mm) A	B	C	D	E min.	F	N min.	Load Cell and Bridge Weight (kg)	Adaptor Kit Weight (kg)
GT3-LCB	M39 x 4	GT3PM-NRS03940	5127,1	768,9	160	126	46	138	256	56	96	7,0	5,7
	M42 x 4,5	GT3PM-NRS04245	5127,1	768,9	160	126	46	138	256	56	98	7,0	5,4
	M45 x 4,5	GT3PM-NRS04545	5127,1	768,9	160	126	46	138	256	56	101	7,0	5,0
	M48 x 5	GT3PM-NRS04850	5127,1	768,9	160	126	46	138	256	56	104	7,0	4,7
	M52 x 5	GT3PM-NRS05250	5127,1	768,9	160	126	46	138	256	56	107	7,0	4,2
	1½"- 8UN	GT3P-NRS1500U08	5127,1	768,9	160	126	46	138	256	56	95	7,0	5,7
	1⅝"- 8UN	GT3P-NRS1625U08	5127,1	768,9	160	126	46	138	256	56	98	7,0	5,3
	1¾"- 8UN	GT3P-NRS1750U08	5127,1	768,9	160	126	46	138	256	56	101	7,0	5,0
	1⅞"- 8UN	GT3P-NRS1875U08	5127,1	768,9	160	126	46	138	256	56	104	7,0	4,6
	2"- 8UN	GT3P-NRS2000U08	5127,1	768,9	160	126	46	138	256	56	106	7,0	4,2
GT4-LCB	M52 x 5	GT4PM-NRS05250	9782,1	1466,9	180	141	62	174	281	71	121	12,2	10,7
	M56 x 5,5	GT4PM-NRS05655	9782,1	1466,9	180	141	62	174	281	71	124	12,2	10,1
	M60 x 5,5	GT4PM-NRS06055	9782,1	1466,9	180	141	62	174	281	71	127	12,2	9,4
	M64 x 6	GT4PM-NRS06460	9782,1	1466,9	180	141	62	174	281	71	129	12,2	8,8
	M68 x 6	GT4PM-NRS06860	9782,1	1466,9	180	141	62	174	281	71	132	12,2	8,1
	2"- 8UN	GT4P-NRS2000U08	9782,1	1466,9	180	141	62	174	281	71	120	12,2	10,7
	2¼"- 8UN	GT4P-NRS2250U08	9782,1	1466,9	180	141	62	174	281	71	126	12,2	9,7
	2½"- 8UN	GT4P-NRS2500U08	9782,1	1466,9	180	141	62	174	281	71	132	12,2	8,5
GT5-LCB	M68 x 6	GT5PM-NRS06860	15079,7	2261,4	202	157	78	210	302	86	148	18,7	17,3
	M72 x 6	GT5PM-NRS07260	15079,7	2261,4	202	157	78	210	302	86	149	18,7	16,4
	M76 x 6	GT5PM-NRS07660	15079,7	2261,4	202	157	78	210	302	86	152	18,7	15,5
	M80 x 6	GT5PM-NRS08060	15079,7	2261,4	202	157	78	210	302	86	155	18,7	14,6
	2½"- 8UN	GT5P-NRS2500U08	15079,7	2261,4	202	157	78	210	302	86	148	18,7	17,8
	2¾"- 8UN	GT5P-NRS2750U08	15079,7	2261,4	202	157	78	210	302	86	153	18,7	16,3
	3"- 8UN	GT5P-NRS3000U08	15079,7	2261,4	202	157	78	210	302	86	158	18,7	14,8
	3¼"- 8UN	GT5P-NRS3250U08	15079,7	2261,4	202	157	78	210	302	86	161	18,7	13,1
GT6-LCB	M80 x 6	GT6PM-NRS08060	18972,1	2845,1	219	173	82	240	323	95	167	27,8	22,3
	M85 x 6	GT6PM-NRS08560	18972,1	2845,1	219	173	82	240	323	95	170	27,8	21,0
	M90 x 6	GT6PM-NRS09060	18972,1	2845,1	219	173	82	240	323	95	175	27,8	19,4
	M95 x 6	GT6PM-NRS09560	18972,1	2845,1	219	173	82	240	323	95	179	27,8	18,0
	3¼"- 8UN	GT6P-NRS3250U08	18972,1	2845,1	219	173	82	240	323	95	173	27,8	20,7
	3½"- 8UN	GT6P-NRS3500U08	18972,1	2845,1	219	173	82	240	323	95	181	27,8	18,8
	3¾"- 8UN	GT6P-NRS3750U08	18972,1	2845,1	219	173	82	240	323	95	188	27,8	16,8
GT7-LCB	M100 x 6	GT7PM-NRS10060	26389,4	3958,4	243	182	89	277	332	110	196	38,2	28,5
	M105 x 6	GT7PM-NRS10560	26389,4	3958,4	243	182	89	277	332	110	199	38,2	27,3
	4"- 8UN	GT7P-NRS4000U08	26389,4	3958,4	243	182	89	277	332	110	204	38,2	27,3

* Load Cell with tommy bar.

EAJ-Series, Aquajack® Subsea Tensioners

ENERPAC

▼ Aquajack® Tensioner EAJ2LC with Quick Fastening Nut



The most cost effective solution to subsea bolt or stud tightening

- **Compact design**
- **Long piston stroke**
- **Misalignment compensation**
- **Quick, simple hose connection**
- **Visible piston stroke indication**
- **'No spill' overstroke elimination**
- **Quick fastening or solid reaction nut.**



Quick Fastening Nut Design

Easily positioned in poor visibility conditions, Aquajack® subsea tensioners feature a compact design and long piston stroke. The unique Split Nut® design of these tools allows rapid application to long bolts and damaged threads, and rapid tool removal.

No Oil Spillage or Over-Stroking

Innovative tool design ensures maximum tool strokes can be used without over stroking the piston or oil spillage. Guaranteed to save time and increase efficiency, Aquajack® subsea tensioners improve diver safety, productivity and reduce diver fatigue.

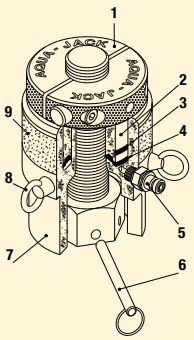

1. Quick Fastening Reaction Nut
2. Long Piston Stroke
3. Maximum Stroke Indicator Band
4. Self-Energising Seals
5. Hose Connections (2x)
6. Tommy Bar
7. Compact Body Design
8. Lifting Eyes
9. Anti-Slip Tool Surface



Hose Reels and Stand

Stainless steel stand with 1500 bar hoses from 30 upto 270 metres lengths. All hose reels are built up with multiple 30 metre length hoses.

Page: 301

▼ *Guaranteed to save time and increase efficiency, Aquajack® tensioners improve diver safety, productivity and reduce diver fatigue.*



Aquajack® Subsea Tensioners

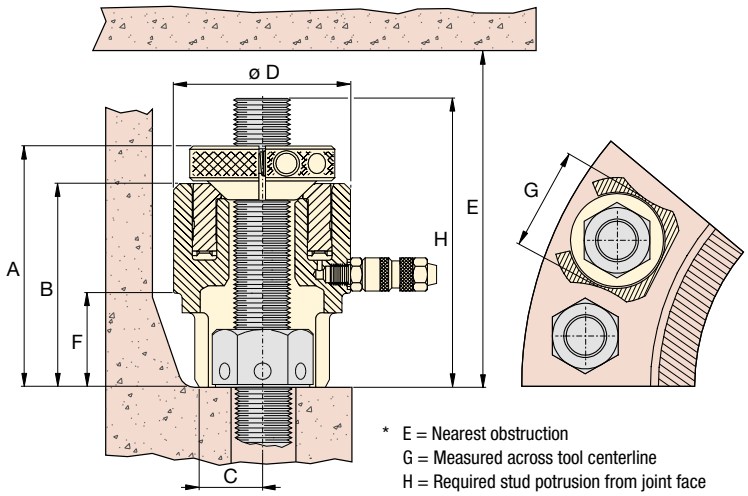

* E = Nearest obstruction
G = Measured across tool centerline
H = Required stud potrusion from joint face

EAJ Series



Bolt Range:
M20 - M90 | ¾ - 3½ inch

Maximum Load Capacity:
151,3 - 2320,9 kN

Maximum Operating Pressure:
1500 bar

Load Cell Model Number **	Thread Size	Quick Fastening Nut Model Number	Cylinder Effective Area (mm²)	Maximum Load Capacity (kN)	Stroke (mm)	Dimensions (mm) A	B	C	D	E *	F	G *	H *	Tool Weight (kg)
EAJ1LC	¾" - 10 UN	EAJ1QFN0750U10	1008,7	151,3	20	114	91	19	66	217	35	53	119	1,5
	7/8" - 9 UN	EAJ1QFN0875U09												
	M20 x 2,5	EAJ1QFNM02025												
	M22 x 2,5	EAJ1QFNM02225												
EAJ2LC	1" - 8 UN	EAJ2QFN1000U08	1658,4	248,7	30	147	120	25	82	289	50	62	152	3,0
	M24 x 3,0	EAJ2QFNM02430												
	M27 x 3,0	EAJ2QFNM02730												
	1⅛" - 8 UN	EAJ2QFN1125U08												
	M30 x 3,5	EAJ2QFNM03035												
EAJ3LC	1¼" 8 UN	EAJ3QFN1250U08	2524,3	378,6	30	158	131	28	98	307	58	78	163	4,5
	M33 x 3,5	EAJ3QFNM03335												
	1⅜" - 8 UN	EAJ3QFN1375U08												
	M36 x 4,0	EAJ3QFNM03640												
EAJ4LC	1½" - 8 UN	EAJ4QFN1500U08	3686,7	553,0	30	171	136	33	114	319	63	91	176	6,0
	M39 x 4,0	EAJ4QFNM03940												
	1⅝" - 8 UN	EAJ4QFN1625U08												
	M42 x 4,5	EAJ4QFNM04245												
EAJ5LC	1¾" - 8 UN	EAJ5QFN1750U08	5908,7	886,3	30	184	146	40	139	342	70	114	189	9,0
	M45 x 4,5	EAJ5QFNM04545												
	1⅞" - 8 UN	EAJ5QFN1875U08												
	M48 x 5,0	EAJ5QFNM04850												
	2" - 8 UN	EAJ5QFN2000U08												
	M52 x 5,0	EAJ5QFNM05250												
EAJ6LC	M56 x 5,5	EAJ6QFNM05655	8312,8	1246,9	30	201	161	49	164	367	82	138	206	13,0
	2¼" - 8 UN	EAJ6QFN2250U08												
	M60 x 5,5	EAJ6QFNM06055												
	2½" - 8 UN	EAJ6QFN2500U08												
	M64 x 6,0	EAJ6QFNM06460												
EAJ7LC	M68 x 6,0	EAJ7QFNM06860	12.369,0	1855,4	30	230	178	75	192	400	95	154	235	19,0
	2¾" - 8 UN	EAJ7QFN2750U08												
	M72 x 6,0	EAJ7QFNM07260												
	M76 x 6,0	EAJ7QFNM07660												
	3" - 8 UN	EAJ7QFN3000U08												
EAJ8LC	M80 x 6,0	EAJ8QFNM08060	15.473,0	2320,9	30	247	193	68	216	412	109	182	252	24,5
	3¼" - 8 UN	EAJ8QFN3250U08												
	M85 x 6,0	EAJ8QFNM08560												
	3½" - 8 UN	EAJ8QFN3500U08												
	M90 x 6,0	EAJ8QFNM09060												

** Tommy Bar included with Load Cell.

PGT-Series, Power Generation Bolt Tensioners

ENERPAC

▼ PGT-Series Single Stage and Double Deck Tensioners



High Precision, Low Maintenance



Tensioning Pumps

Electric, pneumatic and manual high-pressure tensioning pumps are available for use with Enerpac hydraulic tensioners.



Hoses and Fittings

High-pressure hoses and fittings for use with Enerpac tensioning systems are available.

Page: 301

- **PGT-Series Bolt Tensioners are designed for critical fastening applications in wind, steam and gas turbines**
- **A broad range of single stage and double deck tensioners provide high performance in tight spaces associated with Power Generation applications**
- **PGT-Series Bolt Tensioners are loaded with performance enhancing features such as Auto-Retract Pistons, Cycle Counters and a premium coating to offer the ultimate in efficiency, durability and ease of use.**

Description	PGTS Single Stage	PGTD Double Deck
Auto-Retract Piston	✔	✔
Zinc Coating	✔	✔
Geared Nut-Rundown	✔	✔
Over-stroke Indicator	✔	✔
Over-stroke Preventer	✔	✔
Single Male Fitting	✔	✔
Swivel Manifold	✚	✚
Cycle Counter	–	✚

✔ = **Standard on tensioner**
✚ = **Possible option**
– = **Option not available**

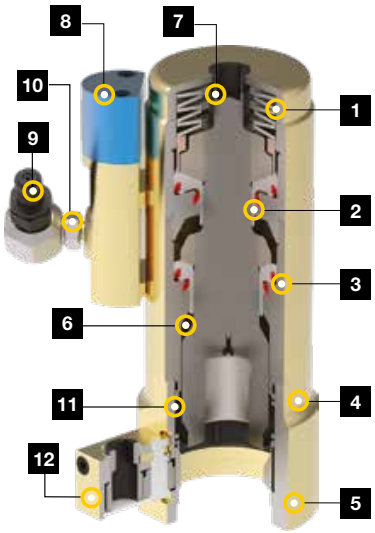

▲ *The model above illustrates a typical tool configuration. Actual model configurations vary.*

1. **Auto-retract piston:** Simplifies use and improves speed of operation.
2. **Long-life puller:** For maximum durability.
3. **Long-life seals:** For maximum durability and extended service life intervals.
4. **Corrosion protection:** Zinc coating provides best-in-class corrosion resistance.
5. **Interchangeable bridge:** For optimal application fit.
6. **Over-stroke preventer:** Mechanically prevents over-stroke, extending cylinder life.
7. **Over-stroke indicator:** Extends cylinder life by helping to prevent over-stroking of cylinder.
8. **Optional counter:** Helps indicate when maintenance is due to maximize uptime.
9. **Quick-disconnect coupler:** For safe, simple hydraulic connection.
10. **Optional 360° swivel:** available for additional hose positioning flexibility.
11. **Spring-loaded nut engagement:** Keeps socket positioned on nut for faster and easier seating process.
12. **Gearbox:** for nut run down. Easy and quick nut run down back to the flange

Power Generation Bolt Tensioners

Options

Fitting Type

SW = Swivel manifold with single male fitting
Example: **PGTS2436SW**

Cycle-Counter

C = Cycle Counter (not available on PGTS-models)
Example: **PGTD3655SWC**

① Puller bar square drive
② Swivel manifold with single male fitting
③ Single male fitting
④ Nut run down gear box

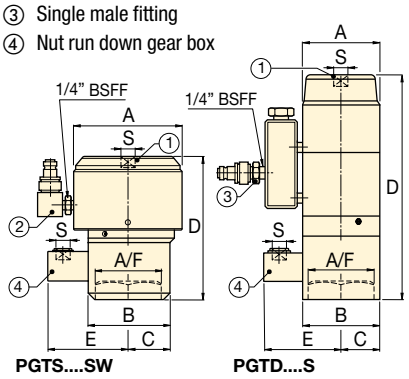

PGT Series



Bolt Range:
M20 - M72

Maximum Load Capacity:
203,7 - 2969,6 kN

Maximum Operating Pressure [1]:
1350 - 1500 bar

[1] Max. pressure varies, see specifications table for details.

Tensioner Type	Thread Diameter (mm)	Model Number with single male fitting	Nut Size A/F (mm)	Maximum Pressure (bar)	Hydraulic Pressure Area (mm²)	Maximum Load Capacity (kN)	Stroke (mm)	Dimensions (mm) A	B	C	D	E	S * (inch)	(kg)	Bolt Potrusion (mm) min.	max.
Single Stage	M20 x 2,5	PGTS2030S	30	1500	1358	203,7	7,0	64	64	32	81	78	⅜	2,0	44	55
	M24 x 3,0	PGTS2436S	36	1500	1947	292,1	7,0	77	77	31	98	81	⅜	2,9	49	62
	M27 x 3,0	PGTS2742S	42	1500	2646	396,9	8,0	92	75	34	129	83	⅜	4,8	60	70
	M30 x 3,5	PGTS3046S	46	1500	3204	480,7	8,0	99	85	38	134	88	⅜	5,8	68	73
	M33 x 3,5	PGTS3350S	50	1500	3960	594,0	8,0	106	90	40	142	90	⅜	6,8	75	100
	M36 x 4,0	PGTS3655S	55	1500	4467	670,1	9,0	111	90	56	128	95	½	6,4	71	95
	M39 x 4,0	PGTS3960S	60	1500	5561	834,1	10,0	123,5	104	46	160	96	⅜	9,8	89	115
	M42 x 4,5	PGTS4265S	65	1500	6259	938,8	10,0	134	115	67	177	99	½	9,5	79	115
	M45 x 4,5	PGTS4570S	70	1500	7505	1125,8	10,0	143	119	53	168	102	⅜	13,2	98	116
	M48 x 5,0	PGTS4875S	75	1500	8390	1258,4	10,0	152	125	56	158	106	⅜	13,3	103	119
	M52 x 5,0	PGTS5280S	80	1500	10.094	1514,1	10,0	165	134	59	171	108	⅜	17,9	106	118
	M56 x 5,5	PGTS5685S	85	1500	11.663	1749,5	10,0	177	142	62	170	112	⅜	20,4	116	128
	M60 x 5,5	PGTS6090S	90	1500	13.474	2021,2	10,0	190	152	66	186	115	⅜	24,8	123,5	137
	M64 x 6,0	PGTS6495S	95	1500	15.315	2297,3	10,0	200	159	69	207	118	½	30,7	137	150
	M68 x 6,0	PGTS68100S	100	1500	17.493	2623,9	10,0	213,5	169	73	206	123	½	34,3	136	148
	M72 x 6,0	PGTS72105S	105	1500	19.797	2969,6	10,0	225	178	76	223	126	½	40,3	151	167
Double Deck	M24 x 3,0	PGTD2436S	36	1350	2293	309,6	6,0	61,5	77	31	185	81	⅜	4,6	53	59,5
	M27 x 3,0	PGTD2742S	42	1350	2939	396,8	6,0	68	75	34	196	83,4	⅜	5,3	60	68
	M30 x 3,5	PGTD3046S	46	1350	3426	462,6	7,0	73	85	37	195	88	⅜	5,8	60	70
	M33 x 3,5	PGTD3350S	50	1350	4272	576,7	7,0	78	77	38,5	208	90	⅜	6,7	65	77
	M36 x 4,0	PGTD3655S	55	1350	4995	674,3	8,0	84	83	41	218	93	½	7,7	70	87
	M39 x 4,0	PGTD3960S	60	1350	6260	845,0	10,0	95	104	48	266	96	⅜	12,5	84	93
	M42 x 4,5	PGTD4265S	65	1350	6865	926,8	10,0	98	104	52	248,4	99	½	11,4	82	91
	M45 x 4,5	PGTD4570S	70	1350	8339	1125,8	10,0	108	119	53	294	104	⅜	17,7	97	107
	M48 x 5,0	PGTD4875S	75	1350	9430	1273,1	10,0	115	125	57,5	304	106	⅜	20,1	103	113
	M52 x 5,0	PGTD5280S	80	1350	11.288	1523,8	10,0	124	134	61	328	108	⅜	26,1	110	125,5
	M56 x 5,5	PGTD5685S	85	1350	12.942	1747,1	10,0	132	142	65	346	112	⅜	30,0	117	132,5
	M60 x 5,5	PGTD6090S	90	1350	15.032	2029,3	10,0	141	152	70,5	372	115	⅜	37,2	125	143
	M64 x 6,0	PGTD6495S	95	1350	17.123	2311,6	10,0	151	159	76	386	119	½	43,0	133	152,5
	M68 x 6,0	PGTD68100S	100	1350	19.514	2634,4	10,0	160	170	80	398	123	½	49,5	138	160
	M72 x 6,0	PGTD72105S	105	1350	21.977	2966,9	10,0	171	177	88,5	429	126	½	60,1	146	171

* Dimension S = Square Drive of Puller Bar and Gear Box.

FTR-Serie, Foundation Bolt Tensioners

ENERPAC

▼ FTR-Series, Foundation Bolt Tensioners Round



High Precision, Low Maintenance

- **FTR-Series Foundation Bolt Tensioners provide fast, accurate and easy tightening of external or internal-ring wind tower foundations**
- **Standard models are available for 75, 150 ksi and metric style Williams, Dyson and Macalloy® bar types**
- **Long-stroke options accelerate process with single-pull tensioning.**

FTR-Series Foundation Bolt Tensioners

FTR-Series Foundation Bolt Tensioners are designed specifically for tensioning wind tower foundation bolts. These tensioners provide the speed and precision required by this critical application.

Potential thread fit problems are eliminated through the use of existing rebar hex nuts as a reaction point.

The FTR-Series includes long-stroke models, which provide greater speed and ease of use by enabling applications to be completed in a single pull.

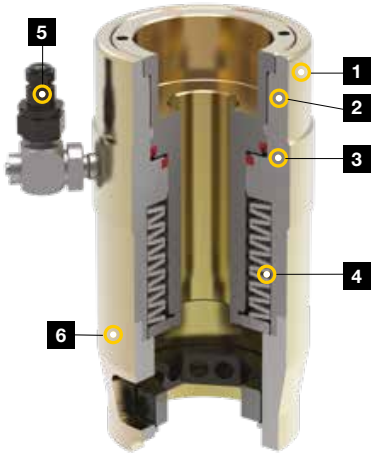

1. **Corrosion protection:** Zinc coating provides best-in-class corrosion resistance.
2. **Over-stroke indicator:** Extends life by helping to prevent over-stroking of cylinder.
3. **Long-life seals:** For maximum durability and extended service life intervals.
4. **Auto-retract piston:** Simplifies use and improves speed of operation.
5. **Quick-disconnect coupler:** For safe, simple hydraulic connection. Optional 360° swivel available for additional hose positioning flexibility.
6. **Interchangeable bridge:** For optimal application fit.

▼ *FTR-Series Foundation Bolt Tensioner. Manual wrench (not included) required to apply up to 30 Nm of torque during installation of models that feature run down gears.*



Tel: +45 63 12 83 00 | Email: ps@hymatik.com | www.hymatik.com | Hvidkaervej 27a, DK-5250 Odense SV, Denmark

Foundation Bolt Tensioners

▼ This is how a FTR-Series Foundation Bolt Tensioner model number is built up:

FTR	75	14	20	SW	G
1 Product Type	2 Bar Grade	3 Bar Size Designation	4 Stroke	5 Fitting Type	6 Run Down Gear *

1 Product Type
FTR = Foundation Tensioner, Round

2 Bar Grade
75 = 75 ksi
150 = 150 ksi
(or metric designation)

3 Bar Size Designation
Example
14 = No. 14 bar size

4 Maximum Stroke
Example:
20 = 20 mm max. stroke

5 Fitting Type
SW = Includes swivel manifold with single male fitting

6 Run Down Gear
G = Includes Nut Run Down Gear
* available in select models

FTR Series



Maximum Load Capacity:
2736 kN

Maximum Operating Pressure [1]:
1500 bar

[1] Max. pressure varies, see specifications table for details.



Tensioning Pumps
Electric, pneumatic and manual high-pressure tensioning pumps are available for use with Enerpac hydraulic tensioners.



Hoses and Fittings
High-pressure hoses and fittings for use with Enerpac tensioning systems are available.

Page: 301

Bolting Integrity Software
The software offers Tool selection, Bolt Load calculations and Tool pressure settings, as well as, a combined Application data sheet and Joint completion report. Custom Joint information can also be entered.

Page: 412

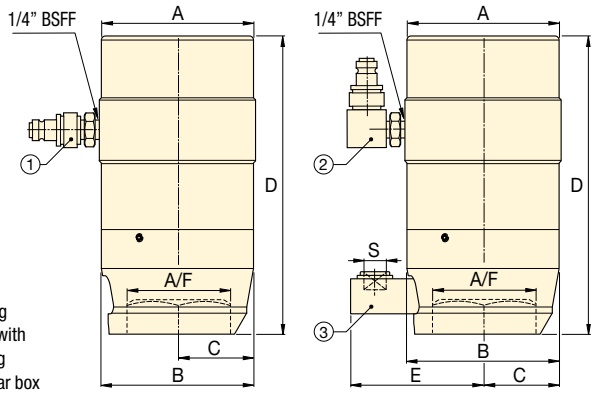

① Single male fitting
② Swivel manifold with single male fitting
③ Nut run down gear box

FTR....S FTR.....SWG

▼ SPECIFICATION TABLE

Bar Grade	Bolt Diameter (mm)	Bolt Diameter (inch)	Bar Size Design-ation	Model Number with single male fitting	Nut Size A/F (mm)	Max. Pressure (bar)	Hydraulic Pressure Area (mm²)	Max. Load Capacity (kN)	Stroke (mm)	Dimensions (mm) A	B	C	D	E	(kg)	Minimum Bolt Potrusion (mm)
75 ksi	35	1.38	#10	**FTR751010S**	51	1200	3134	376,1	10,0	99	88,5	44,3	163	–	5,8	200
	35	1.38	#10	**FTR751025S**	51	1200	3123	374,8	25,0	115	102	42	220	–	10,9	250
	38	1.50	#11	**FTR751110S**	57	1500	3134	470,1	10,0	99	98	38	178	–	5,5	220
	38	1.50	#11	**FTR751125SG**	57	1500	3123	468,5	25,0	115	102	51	226	96	11,5	260
	48	1.88	#14	**FTR751420S**	70	1170	6093	712,9	20,0	132	132	66	268	–	18,2	315
150 ksi	37	1.44	1.25	**FTR15012510S**	57	1170	5383	629,8	10,0	111	110	40	178	–	8,2	220
	40	1.56	1.37	**FTR15013810S**	64	1500	5383	807,5	10,0	111	110	38	178	–	8,1	225
	70	2.75	2.50	**FTR15025025S**	108	1500	18.238	2736,0	25,4	215	212	86	348	–	58,0	450
10.9	36	1.42	36	**FTR1093610SG**	60	1500	3820	573,0	10,0	102	99	40	176	95	8,6	195

Gear box square drive dimension S = ½ inch.

FTE-Series, Foundation Bolt Tensioners

ENERPAC

▼ FTE-Series, Foundation Bolt Tensioner Elliptical



High Precision, Low Maintenance

- **FTE-Series Foundation Bolt Tensioners provide fast and accurate performance in difficult, narrow access foundation tensioning applications**
- **Standard models are available for 75, 150 ksi and metric style Williams, Dyson and Macalloy® bar types**
- **Ideal universal solution that fits both standard and narrow access applications.**

FTE-Series, Foundation Bolt Tensioners

Similar to Standard Foundation Tensioners, Elliptical tensioners were designed specifically for foundation fastening applications on wind towers, and utilize the existing hex nut as a reaction point in order to eliminate thread fit misalignment.

Unlike standard FTR-Series Tensioners, the FTE-Series Tensioners feature an elliptical geometry, which enables fit in narrow access foundation applications, without reducing load capabilities.

Operators may access the nut with a Tommy bar rather then employing the use of an offset rundown gear.

Elliptical tensioners are ideal for close clearance applications, or as a universal tool that will work in nearly any foundation application, whether standard or narrow access.

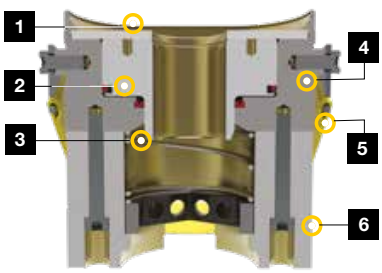

1. **Maximum stroke Indicator:** Extends life by helping to prevent over-stroking of cylinder.
2. **Long-life seals:** For maximum durability and extended service life intervals.
3. **Auto-retract piston:** Simplifies use and improves speed of operation.
4. **Elliptical form:** Provides access to close clearance applications.
5. **Corrosion protection:** Zinc coating provides best-in-class corrosion resistance.
6. **Quick-disconnect coupler:** *(not shown)* For safe, simple hydraulic connection. Optional 360° swivel available for additional hose positioning flexibility.

▼ *FTE-Series, Foundation Bolt Tensioner, designed to fit both standard and narrow access foundation applications.*



Foundation Bolt Tensioners, Elliptical

▼ **This is how a FTE-Series Foundation Bolt Tensioner model number is built up:**

FTE	75	10	SW
1 Product Type	2 Bar Grade	3 Bar Size Designation	4 Fitting Type

1 Product Type
FTE = Foundation Tensioner, Elliptical

2 Bar Grade
75 = 75 ksi
150 = 150 ksi
(or metric designation)

3 Bar Size Designation
Example
10 = No. 10 bar size

4 Fitting Type
SW = Includes swivel manifold with single male fitting

FTE Series



Maximum Load Capacity:
761,1 kN

Maximum Operating Pressure [1]:
1500 bar

[1] Max. pressure varies, see specifications table for details.



Tensioning Pumps
Electric, pneumatic and manual high-pressure tensioning pumps are available for use with Enerpac hydraulic tensioners.



Hoses and Fittings
High-pressure hoses and fittings for use with Enerpac tensioning systems are available.

Page: 301

Bolting Integrity Software
The software offers Tool selection, Bolt Load calculations and Tool pressure settings, as well as, a combined Application data sheet and Joint completion report. Custom Joint information can also be entered.

Page: 412

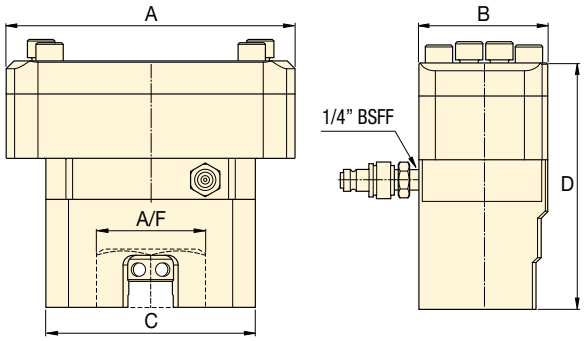

▼ **SPECIFICATION TABLE**

Bar Grade	Bolt Diameter (mm)	Bolt Diameter (inch)	Bar Size Designation	Model Number with single male fitting	Nut Size A/F (mm)	Max. Pressure (bar)	Hydraulic Pressure Area (mm²)	Max. Load Capacity (kN)	Stroke (mm)	Dimensions (mm) A	B	C	D	(kg)	Minimum Bolt Potrusion (mm)
75 ksi	35	1.38	#10	**FTE7510S**	51	1200	3108	373,0	10,0	170	82	142	147,5	8,3	200
	38	1.50	#11	**FTE7511S**	57	1500	3108	466,2	10,0	170	82	142	147,5	8,3	200
150 ksi	40	1.56	1.375	**FTE150138S**	64	1500	5074	761,1	10,0	222	99	161	203,4	18,5	230
	37	1.44	1.250	**FTE150125S**	57	1200	5074	608,9	10,0	222	99	161	203,4	18,9	240
8.8	36	1.42	36	**FTE8836S**	60	1500	3108	466,2	10,0	142	82	142	147,5	9,7	180

HPT-Series, Ultra-High Pressure Hand Pump

ENERPAC

▼ HPT1500



HPT
Series

Reservoir Capacity:
2,5 litres

Flow at Rated Pressure:
0,61 cm³/stroke

Maximum Operating Pressure:
1500 bar

- **Lightweight and portable high-pressure hand pump**
- **Two-speed operation displaces a larger volume of oil per stroke, reducing cycle times for many testing applications**
- **Includes a pressure gauge and coupler for direct connection to Enerpac Bolt Tensioners**
- **Integrated relief valve set at 1500 bar.**



Applications
The hand pump is ideally suited for use with hydraulic bolt tensioning tools and hydraulic nuts.

Page: 286

Ultra-high pressure
This pump operates at ultra-high pressure, use only the specified fittings and hoses designed for these pressures.

Page: 301

Bolt Tensioning Theory
See more on tensioning operation and procedures in our “Yellow Pages”.

Page: 410

Bolting Integrity Software
The software offers Tool selection, Bolt Load calculations and Tool pressure settings, as well as, a combined Application data sheet and Joint completion report. Custom Joint information can also be entered.

Page: 412

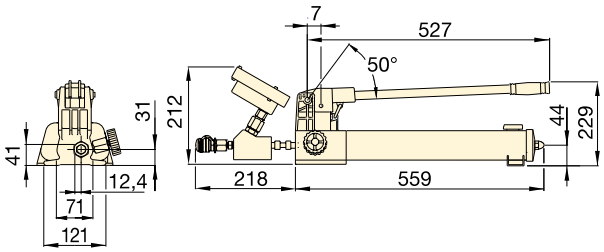

1500 BAR ULTRA-HIGH PRESSURE PUMP

Pump Type	Useable Oil Capacity (litres)	Model Number	Pressure Rating (bar) 1st stage	Pressure Rating (bar) 2nd stage	Oil Displacement per Stroke (cm^3) 1st stage	Oil Displacement per Stroke (cm^3) 2nd stage	High Pressure Oil Port with female coupler	(kg)
Two Speed	2,54	**HPT1500**	14	1500	16,22	0,61	1/4" BSPP + BR-150	9,0

Ultra-High Pressure Hoses & Couplers

- **Hose Reel and Stand: Stainless steel stand with 1500 bar hoses from 30 upto 270 metres lengths**
- **All hose reels are built up with multiple 30 metres length hoses**
- **Wide offering of hoses and system components to complete your tensioning system**
- **Can be used for subsea fastening systems**
- **Hoses can be inter-connected in multi-tool set-ups using nipples, couplers, T-pieces and Y-Pipe assemblies.**

HT, B Series



Hose Lengths:
1 - 30 metres

Hose Reel & Stand:
30 - 270 metres

Maximum Operating Pressure:
1500 bar



▲ *Inter-connected with HT-Series hoses Enerpac subsea tensioners apply uniform bolt load.*

1500 BAR HOSE REEL & STANDS

Model Number		Stainless Steel Hose Reels with Stand (Hose with Female Half BR150 and Male Half BH150 couplers)
HT15000RS		Reel & Stand Assembly, No Fittings
HT15000HRS		Hose Reel & Stand, No Hose
HT15100HRS		Hose Reel & Stand, with 30 m hose
HT15200HRS		Hose Reel & Stand, with 60 m hose
HT15300HRS		Hose Reel & Stand, with 90 m hose
HT15400HRS		Hose Reel & Stand, with 120 m hose
HT15500HRS		Hose Reel & Stand, with 150 m hose
HT15600HRS		Hose Reel & Stand, with 180 m hose
HT15700HRS		Hose Reel & Stand, with 210 m hose
HT15900HRS		Hose Reel & Stand, with 270 m hose

1500 BAR HOSES

Model Number		Hose End 1	Hose End 2	Length (m)
HT1503		1/4" BSPM 120° Cone	1/4" BSPM 120° Cone	1,0
HT1510		1/4" BSPM 120° Cone	1/4" BSPM 120° Cone	3,0
HT15100		1/4" BSPM 120° Cone	1/4" BSPM 120° Cone	30,0
HT1503HR *		BH150	BR150	1,0
HT1506HR *		BH150	BR150	1,8
HT1510HR *		BH150	BR150	3,0
HT1520HR *		BH150	BR150	6,1
HT15100HR *		BH150	BR150	30,0
HT1503RR *		BR150	BR150	1,0
HT1506RR *		BR150	BR150	1,8
HT1510RR *		BR150	BR150	3,0
HT1520RR *		BR150	BR150	6,1

* Includes dust caps.
H = Male Nipple (BH150); R = Female Coupling (BR150)

1500 BAR COUPLERS

Description (includes dust caps)		Complete Set	Female Half	Male Half
Quick Disconnect Coupler		B150	BR150	BH150
Quick Disconnect Coupler & Adaptor Kit		BW150AW	–	–
Quick Disconnect Blanking Coupler Set		B150B	BR150B	BH150B

1500 BAR T-PIECES

Model Number	shown HT15TPMMF	End 1	End 2	End 3
HT15TPMMF		1x BH150	1x BH150	1x BR150
HT15TPMMM		1x BH150	1x BH150	1x BH150

1500 BAR Y-PIPE ASSEMBLIES

Model Number	shown HT1506YTPMMF	End 1 Hose	End 2 Hose	End 3 T-Piece
HT1506YPMMF	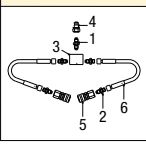	HT1506HR	HT1506HR	HT15TPMMF
HT1510YPMMF		HT1510HR	HT1510HR	HT15TPMMF
HT1506YPFMF		HT1506RR	HT1506RR	HT15TPMMM
HT1510YPFMF		HT1510RR	HT1510RR	HT15TPMMM

Y-Pipe Assembly: 1+2 = adaptor; 3 = stainless steel T with 1/4" BSPM
4 = Male Nipple (BH150); 5 = Female Coupling (BR150); 6 = Hose

Electric Tensioning Pumps

ENERPAC

▼ ZUTP1500SE-H



ZUTP Series

Reservoir Capacity:
4,0 litres

Flow at Rated Pressure:
0,33 l/min

Motor Size:
1,25 kW

Maximum Operating Pressure:
1500 bar

- **Solenoid-operated valve with 6 m pendant for remote control of valve and one-man operation**
- **Easily accessible manual override valve to release pressure if power is lost**
- **Safety relief valve limits output pressure**
- **Two-stage pump design provides high flow at low pressure for fast system fills and controlled flow at high pressure for accurate operation**
- **1,25 kW heavy-duty universal motor provides the best performance-to-weight ratio**
- **Replaceable 10 micron reservoir breather and inline high pressure filter helps maintain oil cleanliness for optimum performance**
- **Panel-mounted 153 mm pressure gauge, with polycarbonate cover, is set into the protective metal shroud for improved visibility.**

ZUTP-Tensioning Pumps

ZUTP-pumps achieve high pressure without the need for an intensifier. This allows for low maintenance, resulting in less cost for the end-user.

ZUTP-S with Solenoid Valve

The **ZUTP1500S** with pendant-operated solenoid valve is ideal for multiple bolt tensioning applications as it allows for single-person operation. The operator can pressurize and depressurize the tensioner directly from the pendant.

OIL FLOW VERSUS PRESSURE

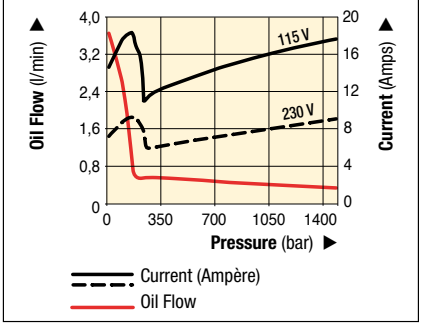

1500 bar HIGH PRESSURE PUMP

Useable Oil Capacity (litres)	Valve Type	Model Number [1]	Pressure Rating (bar)	Output Flow Rate (l/min) 0 bar	Output Flow Rate (l/min) 1500 bar	1,25 kW Motor [5] (VAC, 1-ph, 50 Hz)	(kg)
4,0	Solenoid	ZUTP1500SB	1500	3,80	0,33	115	29,5
		ZUTP1500SE [2]				230 [2]	
		ZUTP1500SI [3]				230 [3]	
4,0	Solenoid	ZUTP1500SB-H [4]	1500	3,80	0,33	115	34,0
		ZUTP1500SE-H [2] [4]				230 [2]	
		ZUTP1500SI-H [3] [4]				230 [3]	
4,0	Jog	ZUTP1500B	1500	3,80	0,33	115	29,5
		ZUTP1500E [2]				230 [2]	
		ZUTP1500I [3]				230 [3]	

[1] All models meet CE safety requirements and all TÜV requirements.
[2] European plug and CE EMC directive compliant.
[3] With NEMA 6-15 plug. [4] H = with heat exchanger.
[5] Sound level 89 dBA.

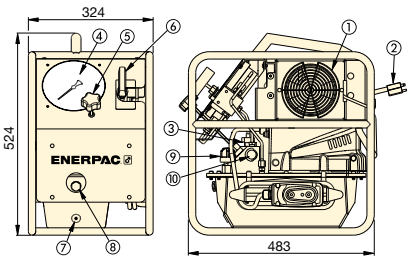

① Heat Exchanger (optional)
② Power Cord
③ Solenoid Dump Valve
④ Pressure Gauge
⑤ User Adjustable Relief Valve
⑥ Manual Release Valve
⑦ Oil Drain
⑧ Oil Level Sight Glass
⑨ Breather
⑩ Outlet Port with CEJN Coupler (116 Series)

Ultra-High Pressure Air Pump

▼ ATP1500



ATP
Series

Reservoir Capacity:
3,8 litres

Flow at Rated Pressure:
0,07 l/min

Maximum Operating Pressure:
1500 bar

- **General purpose, high pressure air driven two speed pump unit for products requiring up to 1500 bar hydraulic pressure**
- **Compact, lightweight, rugged steel frame for protection and easy handling**
- **Prelubricated pump element, does not require an airline lubricator**
- **Easily adjustable output pressure control**
- **Integrated and protected easy to read glycerin filled gauge**
- **Safety relief valve limits output pressure.**

This pump operates at ultra-high pressure, use only the specified fittings and hoses designed for these pressures.

Page: 301



Applications

The ATP-pump is ideally suited for use with hydraulic bolt tensioning tools and hydraulic nuts.

ATEX Certified

The ATP-Pump is tested and certified according ATEX.

Ex II 2 GD ck T4

Page: 395

OIL FLOW VERSUS PRESSURE

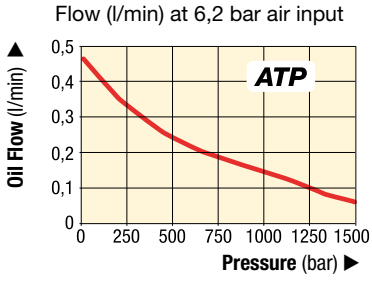

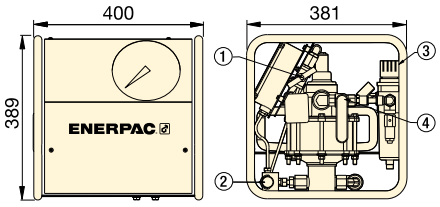

① Shut-off Valve
② Out Port 1/4" BSPM with BR-150 coupler
③ Filter/Regulator
④ Air On/Off Valve
Air Inlet 1/2" NPTF

1500 bar HIGH PRESSURE AIR PUMP

Pump Type	Useable Oil Capacity (litres)	Pressure Rating (bar)	Model Number	Output Flow Rate at 0 bar (l/min)	Output Flow Rate at 1500 bar (l/min)	Air Pressure Range (bar)	Air Consumption (l/min)	Sound Level (dBA)	(kg)
Two speed	3,8	1500	**ATP1500**	0,43	0,07	5,5 - 6,2	594	70	32

Multi Stud Tensioning

ENERPAC

Tensioning every single stud in a joint simultaneously



▲ *Multi Stud Tensioning Set-Up.*

MULTI STUD TENSIONERS

Enerpac Multi Stud Tensioning (MST) systems are capable of tensioning every single stud in a joint simultaneously. By applying a predictable and accurate pre-load to all studs, problems associated with conventional bolt tightening techniques are avoided. Typical Enerpac Multi Stud Tensioning applications include:

Manway, Hand Hole & Inspection Covers

MST systems are the fastest and most accurate means of loosening and tightening studs on Primary & Secondary Manway Covers, Hand-Hole and Inspection Ports in nuclear facilities. Using special ram areas and strong lightweight materials, the MST's reduce bolting time by as much as 75%.

Coolant Pump

A custom slimline tensioning system for a Nuclear Reactor Coolant Pump, using six equally spaced tensioners and tightening studs in four passes, has reduced bolting times by 25% and significantly increased tensioning accuracy.

Wind Turbine Blade Assembly

Using an Enerpac MST has allowed wind turbine blade assembly times to be reduced by approx. 65% while bolt load accuracy and consistency have improved, resulting in better joint life and reduced maintenance requirements. The MST, comprising four tool segments, is capable of simultaneously tensioning up to 88 bolts connecting a 125 ft long blade to a bearing slew ring.

MST - Multi Stud Tensioners

This tool can be custom-designed, and built, for virtually any nuclear facility. We specialise in addressing difficult projects that demand accurate loads within tight space envelopes, while also seeking ease of operation and performance.

- Designed in segments enabling the operator to easily and quickly connect each segment to the joint and link together to provide simultaneous loading.
- Very accurate and fast closure system for large tensioning applications on pumps, valves, and steam-generators, for example.
- For ease of handling on-site, Enerpac MST systems can be supplied with an integral lifting frame and trolley.



▲ *Multi Stud Tensioner.*



▲ *Multi Stud Tensioning application.*

Tel: +45 63 12 83 00 | Email: ps@hymatik.com | www.hymatik.com | Hvidkaervej 27a, DK-5250 Odense SV, Denmark

Hydraulic Nuts

A simple and effective method of tensioning large bolts in difficult to access areas



▲ *Tensioning with hydraulic nuts.*

HYDRAULIC NUTS

Enerpac hydraulic nuts are used in many process-critical bolting applications where the ease of installation and manpower time savings are substantial and on-going. Moreover, they eliminate many of the uncertainties of torque arising from friction, point loading and load scatter.

Enerpac Hydraulic Nuts are a simple and effective method of tensioning large bolts in difficult to access areas with insufficient space for standard tensioners. Typically used when installing and maintaining bolting systems, hydraulic nuts can replace both conventional hexagon nuts and standard round nuts providing a high and predictable degree of tensioning accuracy.

Threaded directly onto the stud, Enerpac hydraulic nuts apply a direct axial elongation by means of hydraulic force generated via the nut's integral hydraulic cylinder. The nut is held in place either by means of a top or bottom load retaining collar externally located on the nut or by the insertion of mechanical shims. Enerpac hydraulic nuts can be retrofitted to existing plant providing an accurate solution to mechanical jointing problems.

Benefits of Enerpac Hydraulic Nuts

- Highly Accurate & Repeatable Bolt Loads
- Ideal where space limitations prevent use of standard detachable tensioners
- Direct Axial Loading - No nut rotation required
- Multiple Nuts can be connected and tightened / loosened simultaneously
- Eliminates issues with friction
- Substantial time savings due to the quick set-up and hydraulic nuts remaining in-situ
- No stud or flange damage (Galling, Seizure)
- No need to change joint hardware – system works with existing studs
- Ideal when the tension in bolts needs to be checked regularly such as vibration loosening.

Enerpac hydraulic nut applications have included:

The Hydraulic Nut is a permanent fixture, replacing the conventional nut and retaining the high bolt load and extension in small space envelopes where there may not be sufficient space to use tensioners.

- Flange Clamps: Pipeline, Structural
- Turbines: Gas, Wind, Steam
- Pressure & Reactor Vessels
- Diesel Engines
- Nuclear Applications: Steam Generators
- Hydraulic and Mechanical Presses
- Heat Exchangers
- Pipeline Flanges, Valves and Control Systems
- Valves & Pumps
- Cranes – Slew Ring Bolts, Tower Cranes
- Shaft Couplings
- Mining: Grinders, Cutters, Earth Moving Equipment.

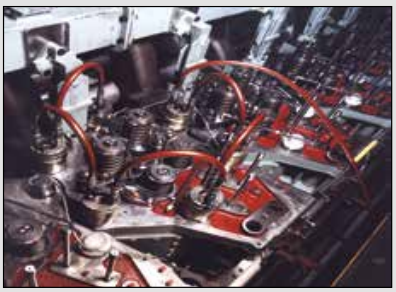

▲ *Hydraulic nuts on a diesel engine.*

ATM-Series, Flange Alignment Tools

ENERPAC

▼ From left to right: **ATM4, ATM9, ATM2** (ATM9 shown without pump and hose)



The faster, simpler and safer way to align flanges

- **Enerpac ATM-Series tools rectify twist and rotational misalignment quickly, safely and without the need for an external power source**
- **Appropriate for use on most ANSI, API, BS and DIN flanges**
- **Reduces set-up time: no need for chains, pulleys or rigs**
- **Safety strap helps provide secure operation**
- **Can be installed and used in any position**
- **Stays stable in position under full load**
- **Portable, lightweight design enables easy transport and use, even in remote locations**
- **Each ATM-model contains a tool and kit box.**



Adjustable Reach

The highly adjustable reach of the wing and drop leg on ATM4 and ATM9 allow precise alignment.



Gauge and Adaptor

The ATM9 includes P142 hand pump and HC7206C 1,8 m long hose. Enerpac recommend the use of the pressure gauge **GP10S** and gauge adaptor **GA4** for easy mounting of the gauge onto your system or use **GA45GC** Gauge Adapotor Assembly.

Page: 127



TFA-Series Wind Turbine Tower Flange Alignment Tools

The TFA Wind Turbine Tower Flange Alignment Tools have been developed to aid the alignment of large flanges on the inside of wind turbine towers during their assembly or installation.

Page: 332

▼ *The compact ATM2 is actuated by simply hand turning the crank.*



▼ *The ATM9 is shown here with optional pressure gauge and gauge adaptor.*



Flange Alignment Tools

Applications

Enerpac ATM-Series Tools help correct flange misalignment, and allow bolts to be placed into joints. This alignment takes place during pipework construction, or maintenance.

These tools provide pipe installers and maintenance personnel with some of the simplest, safest and most productive solutions available for flange alignment in the market today.

① Extendable wing provides usage on wide variety of flanges.
② Portable, light weight design enables easy transport and use.
③ Hand-adjustable base for easy positioning by a single operator.
④ Safety strap helps provide secure operation from a horizontal or vertical position.

ATM4

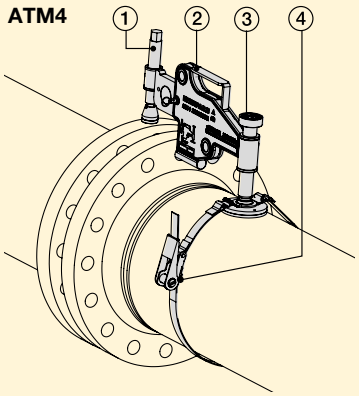

ATM Series



Minimum Bolt Size:
16 - 35,5 mm

Flange Wall Thickness:
14 - 228 mm

Maximum Lifting Force:
1 - 9 ton (10 - 90 kN)



Cylinder-Pump Sets

Hydraulic cylinders, jacks and lifting wedges can also be used to assist in pipe line positioning and aligning.

Page: 62



Pipe Flange Face Tool

The portable, hand powered tool **FF120** makes even the hardest to reach pipe flanges resurfaceable in a safe and convenient way.

Page: 316

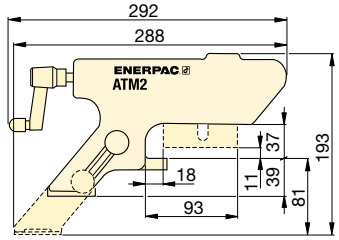

ATM2

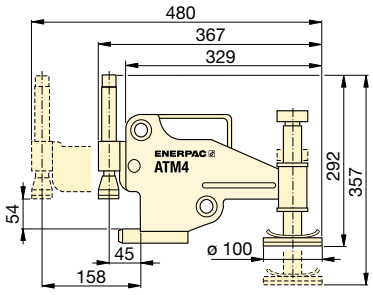

ATM4

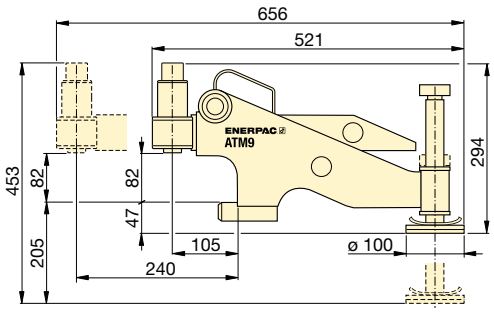

ATM9

Maximum Lifting Force (ton)	Maximum Lifting Force (kN)	Model Number	Minimum Bolt Size (mm)	Minimum Bolt Size (inch)	Flange Wall Thickness (mm)	Flange Wall Thickness (inch)	(kg)
1	10	**ATM2**	16	.63	14 - 82	.55 - 3.29	1,6
4	40	**ATM4**	24	.95	30 - 133	1.18 - 5.23	8,6
9	90	**ATM9 ***	35,5	1.40	93 - 228	3.66 - 9.00	14,5

* ATM9 includes an Enerpac hand pump and hydraulic hose (gauge and adaptor sold separately). ATM9 weight includes tool only.

▼ *The ATM-Series – the faster, simpler and safer way to align flanges.*



FSC, FSH, FSM-Series, Flange Spreading Wedges ENERPAC

▼ FSC14, FSM8 and FSH14 with safety blocks SB1



- Unique interlocking wedge design no first step bending and risk of slipping out of joint
- Requires very small access gap of only 6 mm
- Few moving parts mean durability and low maintenance
- Safety block SB1 included with FSC14, FSH14 and FSM8
- Ratchet spanner SW22 included with FSM8 mechanical spreader
- Singleacting cylinder included with FSH14 hydraulic spreader.

▼ *Two FSH14 spreaders used simultaneously with Enerpac handpump, hoses and AM21 control manifold.*



Practical, portable and lightweight



FSC14 with integrated hand pump

Powered by a builtin hydraulic hand pump, the FSC14 is a readytouse tool – no making or breaking hydraulic connections. This compact tool delivers 14 US tons of force and requires a clearance gap as small as 6 mm.



Stepped Blocks FSB1

Use stepped blocks to increase wedge opening up to 80 mm. Fits both FSC, FSH and FSMmodels.



AM-Series Control Manifolds

For simultaneously and even spreading of flange joints, 180° apart with FSH14.

Page: 132



Flange Maintenance Tools

Secure-Grip and Zero-Gap flange speading tools for application on flanges with a zero or small gap.

Page: 319

Flange Spreading Wedges

Flange Spreading Wedges

The flange spreading tools have been developed to aid and simplify the maintenance of flange joints. No longer will those tasked with separating flanges have to rely on using ropes and pulleys, podgers, tirfors, come-alongs or hammers – there is a safe, quick and effective alternative, the Enerpac range of spreaders.

These spreaders use mechanical and hydraulic principles for separating flanges and can spread small, medium or large flange joints. Tool selection is made on the basis of the access gap between the flange faces, the flange size and the required scope of work.

FSC, FSH, FSM, Series



Tip Clearance / Maximum Spread [1]:
6 mm / 80 mm

Maximum Spread Force:
8 - 14 US tons

Maximum Operating Pressure:
700 bar (FSH14)



Safety Lanyard FSC1

Recommended safety accessory to compliment bolting apllications. Includes steel cable with carabiners.

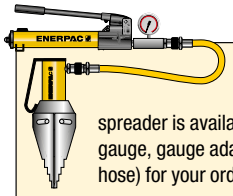

Tool-Pump Sets

The hydraulic flange spreader is available as **set** (pump, tool, gauge, gauge adaptor, couplers and hose) for your ordering convenience.

Spreader Model Nr.	Handpump Model Nr.	Set Model Number
FSH14	P392	**STF14H**

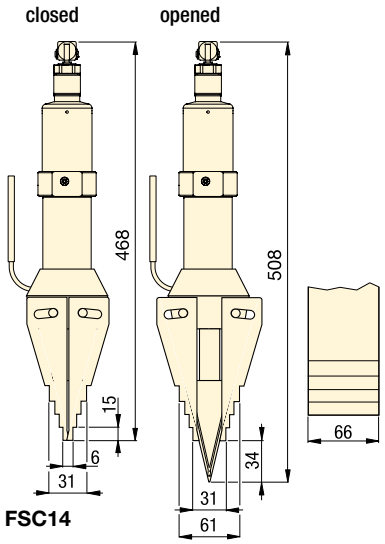

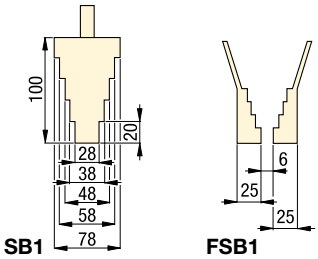

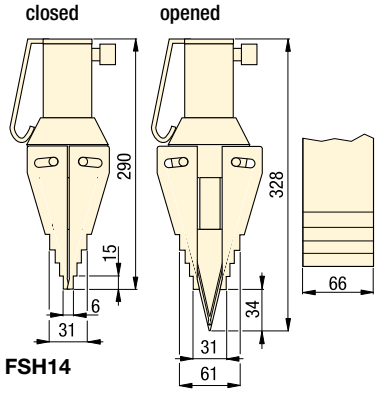

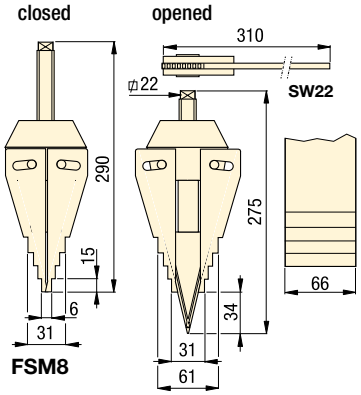

Maximum Spreading Force US tons (kN)	Model Number	Tip Clearance (mm)	Maximum Spread [1] (mm)	Spreader Type	Oil Capacity (cm^3)	(kg)
14 (118)	**FSC14**	6	80	Integral hydraulics	–	9,0
14 (125)	**FSH14** *	6	80	External hydraulics	78	7,1
8 (72)	**FSM8**	6	80	Mechanical	–	6,5

[1] Using stepped blocks FSB1.
* Available as pump-tool set, see note on this page.

▼ *Flange maintenance and joint separation with FSH14 Hydraulic Wedge Spreader.*



NC-Series, Hydraulic Nut Splitters

ENERPAC

▼ Shown from left to right: **NC3241, NC1019, NC1924**



The safest and easiest way to remove corroded and frozen nuts

- **Compact and ergonomic design, easy to use**
- **Unique angled head design**
- **Two blade design (NC-D models) for time saving operation – nuts are split from two sides in one action**
- **Single-acting, spring return cylinder**
- **Heavy duty chisels can be reground**
- **Nut splitters include spare chisel, spare set screw and wrench used to secure the chisel.**
- **CR400 female half coupler is standard.**

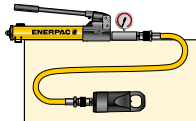

Tool-Pump Sets

Hydraulic Nut Splitters are available as sets (pump, tool, gauge, gauge adaptor, couplers and hose) for your ordering convenience.

Nut Splitter Model Nr.	Hand Pump Model Nr.	Nut Splitter Set Model Number
NC1924	P392	**STN1924H**
NC2432	P392	**STN2432H**
NC3241	P392	**STN3241H**



High Pressure Hoses

Enerpac offers a complete line of high quality hydraulic hoses. To ensure the integrity of your system, specify only genuine Enerpac hydraulic hoses.

Page: 128



GA45GC Gauge Adaptor Assembly

Protect yourself from system overloading by simply ordering one part number for a pre-assembled gauge, adaptor block and coupler.

Page: 142

▼ *Enerpac hydraulic nut splitters – the safest and easiest way to remove corroded and frozen nuts.*



Tel: +45 63 12 83 00 | Email: ps@hymatik.com | www.hymatik.com | Hvidkaervej 27a, DK-5250 Odense SV, Denmark

Single-Acting Hydraulic Nut Splitters

Frozen or Corroded Nuts

Often nuts are difficult to remove, while loosening using tightening tools is possible, it generally requires larger equipment and is time consuming.
The use of cutting torches or hammers and chisels can cause damage to the joint components, requires significantly longer setup and operational time, and can present a potential safety risk.

Hydraulic Nut Splitters

Nut splitting with the Enerpac Hydraulic Nut Splitters is the safest method. It takes less time and avoids costly damage to joint components. The head design fitted with heavy-duty chisels permits the splitting of nuts on a wide variety of applications. With the two blades models nuts are split from two side in one action.

NC STN Series



Bolt Range:
M6 - M48

Hexagon Nut Range:
10 - 75 mm

Capacity:
49 - 882 kN

Maximum Operating Pressure:
700 bar

IMPORTANT!

These nut splitters are only designed for **grade 8 metal nuts** which match sizes shown in the specifications chart. These are not suited for square, star, round or stainless steel nuts. Maximum allowable hardness of nuts to be split is HRc-44.

For materials and sizes not specified, contact Enerpac Technical Services.

For Nut Splitter Model Nr.	Replacement Chisel Model Numbers	
	Moving	Static
NC1019	**NCB1019**	–
NC1924	**NCB1924**	–
NC2432	**NCB2432**	–
NC3241	**NCB3241**	–
NC4150	**NCB4150**	–
NC5060	**NCB5060**	–
NC6075	**NCB6075**	–
NC1924D	**NCB1924**	**NCB1924D**
NC2432D	**NCB2432**	**NCB2432D**
NC3241D	**NCB3241**	**NCB3241D**

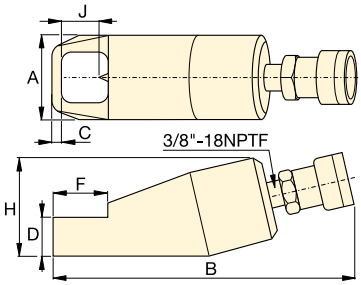

Single Blade Models (NC)

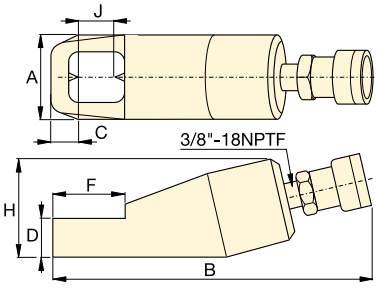

Double Blade Models (NC-D)

	Bolt Range (mm)	Hexagon Nut Range (mm)	Maximum Cutting Force ton (kN)	Oil Capacity (cm^3)	Model Number	Dimensions (mm) A	B	C	D	F	H	J	(kg)
	**M6 - M12**	10 - 19	**5** (49)	15	**NC1019**	40	170	7	19	28	48	21	1,2
	M12 - M16	19 - 24	**10** (98)	20	**NC1924** *	54	191	10	26	40	62	25	2,0
	M16 - M22	24 - 32	**15** (147)	60	**NC2432** *	64	222	13	29	51	72	33	3,0
	M22 - M27	32 - 41	**20** (196)	80	**NC3241** *	75	244	17	36	66	88	43	4,4
	M27 - M33	41 - 50	**35** (343)	155	**NC4150**	94	288	21	45	74	105	54	8,2
	M33 - M39	50 - 60	**50** (490)	240	**NC5060**	106	318	23	54	90	128	60	11,8
	M39 - M48	60 - 75	**90** (882)	492	**NC6075**	156	393	26	72	110	181	80	34,1
	**M12 - M16**	19 - 24	**10** (98)	20	**NC1924D**	54	168	22	25	50	66	26	3,8
	M16 - M22	24 - 32	**15** (147)	60	**NC2432D**	64	275	25	31	65	78	33	5,4
	M22 - M27	32 - 41	**20** (196)	80	**NC3241D**	77	305	31	37	80	90	43	7,2

* Available as Tool-Pump Set, see note on page 310.

NSC, NSH-Series, Nut Splitters

ENERPAC

▼ Shown from left to right: **NSH1927, NSC1927**



Designed to meet the challenges of bolted pipe-line flange joints

- **NSC-Series with built-in small hand pump – useful for subsea applications and working at heights**
- **Quick and easy cutting tip replacement**
- **Drop-tested revolving anchor point and safety lanyard**
- **Revolving composite handle for vibration and shock isolation**
- **Nut Splitters include set of hexagon keys and following spare parts:**
  – cutting tip,
  – tip retention screw,
  – spare alignment screw
- **CR400 female half coupler is standard (NSH).**



NSC-Series Nut Splitters with integral hand pump

Powered by a built-in hydraulic hand pump, the NSC-Series are a ready-to-use tool – no need for hose, separate hand pump or couplings.



Carry Case

Nut splitters (up to NSH6575) come in a carry case for portability and easy storage.



Safety Lanyard FSC1

Standard Safety Lanyard with each nut splitter. Includes steel cable with carabiners.

▼ *The sharp cutting tip and opposing convex reaction point encourages more efficient splitting by spreading the nut open rather than squashing the nut onto the stud. This makes it easier to rotate the nut for the second cut.*

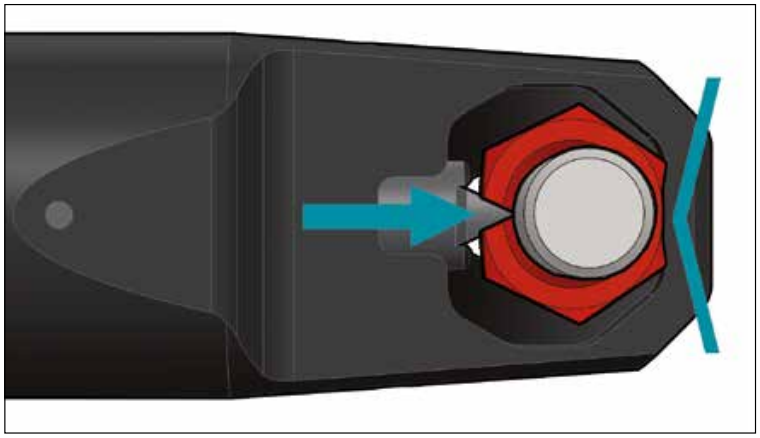



Tel: +45 63 12 83 00 | Email: ps@hymatik.com | www.hymatik.com | Hvidkaervej 27a, DK-5250 Odense SV, Denmark

Single-Acting Integral & Hydraulic Nut Splitters

Frozen or Corroded Nuts

Often nuts are difficult to remove, while loosening using tightening tools is possible, it generally requires larger equipment and is time consuming.

The use of cutting torches or hammers and chisels can cause damage to the joint components, requires significantly longer setup and operational time, and can present a potential safety risk.

Hydraulic Nut Splitters

Nut splitting with the Enerpac Hydraulic Nut Splitters is the safest method. It takes less time and avoids costly damage to joint components. The head design fitted with heavy-duty chisels permits the splitting of nuts on a wide variety of applications.

NSC NSH Series



Bolt Range:
M12 - M48

Hexagon Nut Range:
19 - 75 mm

Capacity:
120 - 500 kN (12 - 50 ton)

Maximum Operating Pressure:
700 bar (NSH-Series)

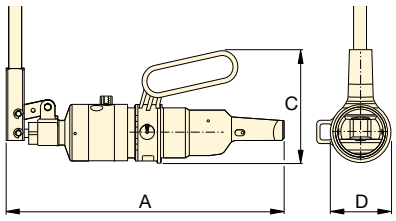

NSC

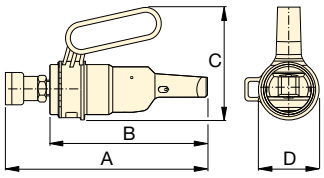

NSH

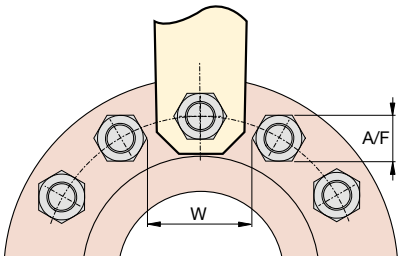

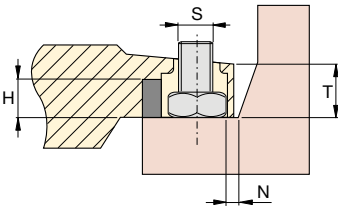



High Pressure Hoses

Enerpac offers a complete line of high quality hydraulic hoses. To ensure the integrity of your system, specify only genuine Enerpac hydraulic hoses.

Page: 128



Joint Separation Tools

Flange Spreading Wedges (FSC, FSH, FSM-Serie) provide quick and easy joint separation using hydraulic or mechanical force.

Page: 308

▼ NUT SPLITTER SPECIFICATIONS

Bolt Range (mm)	Hexagon Nut Range A/F (mm)	Maximum Cutting Force ton (kN)	Oil Capacity (cm^3)	Model Number	Nut Splitter Type	Dimensions (mm) A	B	C	D	H max.	N min.	S max.	T	W min.	(kg)	Cutting Tip Service Kit Model Nr.
M12 - M18	19 - 27	**12** (120)	–	**NSC1927**	Integral pump	353	–	152	81	18	11,5	24,5	26,5	53,5	5,8	**NSH1927CTK**
M16 - M22	24 - 32	**15** (150)	–	**NSC2432**		370	–	152	81	25	9,0	26,6	32,0	57,5	6,3	**NSH2432CTK**
M12 - M18	19 - 27	**12** (120)	46	**NSH1927**	Hydraulic	258	213	152	81	18	11,5	24,5	26,5	53,5	3,5	**NSH1927CTK**
M16 - M22	24 - 32	**15** (150)	46	**NSH2432**		265	220	152	81	25	9,0	26,5	32,0	57,5	4,0	**NSH2432CTK**
M24 - M30	36 - 46	**20** (200)	80	**NSH3646**		290	239	169	93	34	16,0	39,0	44,0	83,5	6,9	**NSH3646CTK**
M33 - M42	50 - 65	**36** (360)	230	**NSH5065**		377	322	210	185	45	23,0	49,5	52,0	108,0	10,9	**NSH5065CTK**
M42 - M48	65 - 75	**50** (500)	328	**NSH6575**		396	345	220	202	54	27,0	61,0	65,0	135,0	24,5	**NSH6575CTK**

Ordering Notes: Maximum allowable hardness to split is ASTM A194 Gr 2H. Not to be used on square nuts or stainless steel.

NSH-Series, Hydraulic Nut Splitters

ENERPAC

▼ Shown: **NSH31 with NSPH3, NSH41 with NSPH4**



Versatile, reliable and trouble free operation

- **Designed to fit standard BS/ANSI flanges**
- **Blade positioning scale to eliminate bolt damage**
- **Adjustable cutting depth**
- **Ergonomically designed and positioned handle**
- **Interchangeable power heads with cutting blade**
- **Single-acting spring return power head (NSPH)**
- **Double-acting power head (NSPH-D) for subsea operation**
- **Nut splitters include spare chisel, spare set screw and wrench used to secure the chisel**
- **CR400 female half coupler standard on NSPH**
- **CR400 + CH604 couplers standard on NSPH-D.**

ATEX certified

- **All NSH cutting head and NSPH power head combinations are CE - ATEX certified.**



Blade Positioning Scale

The pwer head can be adjusted to preset the blade cutting distance in order to prevent damage to the bolt thread as the nut is cut.

The blade positioning scale can be used with the following bolt and nut forms:

- Unified bolt threads (UN) with heavy series hexagon nuts;
- Metric bolt threads (M) with standard series hexagon nuts.



Steel Hand Pumps

The **P80** and **P84** two speed hand pumps are ideal to operate nut splitters. The P84 can be used to power the double-acting tools.

Page: 78



High Pressure Hoses

Enerpac offers a complete line of high quality hydraulic hoses. To ensure the integrity of your system, specify only genuine Enerpac hydraulic hoses.

Page: 128

Tel: +45 63 12 83 00 | Email: ps@hymatik.com | www.hymatik.com | Hvidkaervej 27a, DK-5250 Odense SV, Denmark

Single- and Double-Acting Hydraulic Nut Splitters

Hydraulic Nut Splitters

These Hydraulic Nut Splitters are the ideal tools for removing seized and corroded nuts, eradicating the need for unsafe grinding or flame cutting.

They are designed with a single acting spring return cylinder and boast a 360 degree rotation, lockable handle improving operator safety.

The heavy duty blades can also be easily removed to enable replacement blades to be fitted.

Operator Safety

To improve operator safety an ergonomic, adjustable handle is available which can be easily fitted to the Nut Splitter.
This lightweight, durable accessory can prevent injuries such as trapped fingers by eliminating the need to hold the tool itself.

ATEX Certified: Ex II 2 G c T6

These Nut Splitters are tested and certified to conform to the 94/9/EC "ATEX Directive".
The explosion protection is for Equipment Group II, Equipment Category 2 (Hazardous Zone Area 1) in Gas and/or Dust atmospheres.

NSH Series



Bolt Range:
M45 - M90

Hexagon Nut Range:
70 - 130 mm

Maximum Operating Pressure:
700 bar

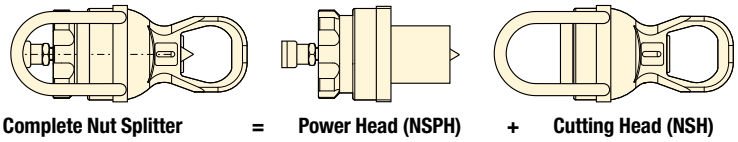

Complete Nut Splitter = **Power Head (NSPH)** + **Cutting Head (NSH)**

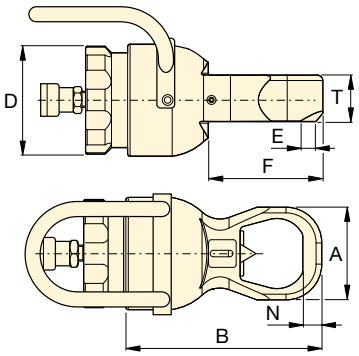

NSPH + NSH

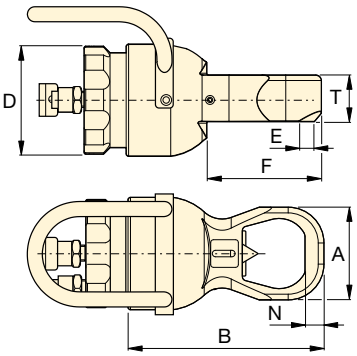

NSPH-D + NSH



Joint Separation Tools

Flange Spreading Wedges (FSC, FSH, FSM-Serie) provide quick and easy joint separation using hydraulic or mechanical force.

Page: 308

For Power Head Model Nr.		Cutting Tip Service Kit Model Nr.
NSPH3	NSPH3D	NSPH3CTK
NSPH4	NSPH4D	NSPH4CTK

▼ NUT SPLITTER SPECIFICATIONS

Bolt Range (mm)	Hexagon Nut Range (mm)	Maximum Cutting Force ton (kN)	Oil Capacity (cm^3)	Model Numbers Nut Splitter Components: Cutting Head	Cutting Head (kg)	Power Heads: Single-acting	Power Heads: Double-acting	Power Heads (kg)	Dimensions (mm): A	B	D	E	F	N	T	Cutting + Power Head (kg)
M45 - M52	70 - 80	**105** (1025)	550	**NSH31**	20	**NSPH3**	**NSPH3D**	22	132	308	190	7	189	28	81	42
M45 - M56	70 - 85	**105** (1025)	550	**NSH32**	21	**NSPH3**	**NSPH3D**	22	145	323	190	15	200	30	81	43
M45 - M64	70 - 95	**105** (1025)	550	**NSH33**	22	**NSPH3**	**NSPH3D**	22	160	331	190	11	200	32	81	44
M45 - M70	70 - 100	**105** (1025)	550	**NSH34**	22	**NSPH3**	**NSPH3D**	22	174	342	190	11	204	35	81	44
M76 - M80	110 - 115	**178** (1733)	1100	**NSH41**	32	**NSPH4**	**NSPH4D**	38	189	365	235	4,5	230	36	111	70
M76 - M90	110 - 130	**178** (1733)	1100	**NSH42**	44	**NSPH4**	**NSPH4D**	38	219	393	235	3	246	36	111	82

Ordering Notes: Maximum allowable hardness to split is ASTM A194 Gr 2H. Not to be used on square nuts or stainless steel.

FF-Series, Mechanical Pipe Flange Face Tool

ENERPAC

▼ FF120



Safe, efficient and accurate refacing of flat pipe flange surfaces

- **Makes refacing easy – hand operated machine tool can be set up anywhere without the need for air, electric or hydraulic power**
- **Lightweight and portable (15 kg in storage box)**
- **Adjustable cutting head for reface of flat flange surfaces of pipes with flange outside diameter facing range 25,4 - 304,8 mm [1 - 12 inch]**
- **Interchangeable collets for ID mounting range 25,4 - 152,4 mm [1-6 inch] allow the user to work on many different flanges with minimal time between set-ups**
- **Interchangeable lead screws suitable for refacing damaged raised-face (RF) or flat-face (FF) joint flanges**
- **Tool body with expanding collets centers itself providing real concentric operation.**

▼ *The Enerpac FF120 used to face a pipe flange.*





Complete in Wheeled Carrying Case

The **FF120** comes as portable set (15 kg). Can be transported, easy set-up and operated by a single technician. Set includes:
FFL-kit with locators, O-Rings and extensions;
FSS-kit with feed screw and nut ½"-20 UN for surface roughness Ra 1,6 - 2,4 µ.
FSF-kit with feed screw and nut ½"-11 UNF for surface roughness Ra 3,2 - 6,3 µ.



Joint Separation Tools

FSC, FSH, FSM-Series parallel wedge spreaders provide quick and easy joint separation using hydraulic or mechanical force.

Page: 308



Flange Alignment Tools

The ATM-Series provide safe and high-precision flange alignment tools that fit most commonly used ANSI, API, BS and DIN flanges.

Page: 306



Controlled Tightening and Loosening

Use Enerpac Bolting Tools to seal the joint to the precise torque or tension required: torque multipliers, torque wrenches and hydraulic bolt tensioners.

Page: 211

Tel: +45 63 12 83 00 | Email: ps@hymatik.com | www.hymatik.com | Hvidkaervej 27a, DK-5250 Odense SV, Denmark

QuickFace – Mechanical Pipe Flange Face Tool

Mechanical Flange Face Tool

Portable, hand powered tool makes even the hardest to reach pipe flanges resurfaceable in a safe and convenient way.

Makes refacing easy

A simple and cost effective solution – the FF120 turns a two man operation with heavy equipment, compressors and portable generators into a one man job.

The FF120 has interchangeable lead screws that make it suitable for resurfacing damaged flat-faced or raised-face joint flanges to the high safety standards required. FF120 is not suitable for lens-ring joint flanges or ring type joint (RTJ) flanges.

After selecting the correct lead screw for the operation, the tool body is inserted in the pipe end and centres itself with adjustable locators to provide real concentric operation.

The tool arm is then rotated by hand using a worm-gear mechanism to provide a perfect spiral "gramophone" finish. The tool can be adjusted with a calibrated slide to define cut depth and the correct finish.

Surface finish & accuracy

A serrated finish with 30-55 grooves per inch and a resultant roughness of between Ra 3,2-12,5 µ (125-500 micro inches). The FF-120 has same precision and quality of finish as a lathe.

Cost effective solution

Small and portable enough to be a permanent addition to your equipment range, Enerpac's FF120 is the perfect solution to all of your small diameter facing problems.

For more Flange Facing Machines, see page 375.

FF Series



Pipe Flange Cutting Diameter Range:
ø 25 - 305 mm / 1 - 12"

Internal Pipe Mounting Range:
ø 25 - 152 mm / 1 - 6"

Cutting Resultant Roughness:
Ra 3,2 - 12,5 µ



1. Hand-operated cold work tool – no need for external power and hot work permits.
2. Calibrated cross slide for accurate cutting control.
3. Adjustable cutting head for reface of flat flange surfaces of pipes with flange OD facing range ø 25,4-304,8 mm [1-12 inch].
4. Interchangeable lead screws enable selection of surface finish between Ra 3,2-12,5 µ.
5. Utilizes standard 3/8 inch or 10 mm tool steel.
6. Range of interchangeable collets allow the tool to accommodate ø 25,4 - 152,4 mm (1 - 6 inch) pipe ID.
7. Tool body with expanding collets centers in the bore ensuring concentric and accurate set-up.

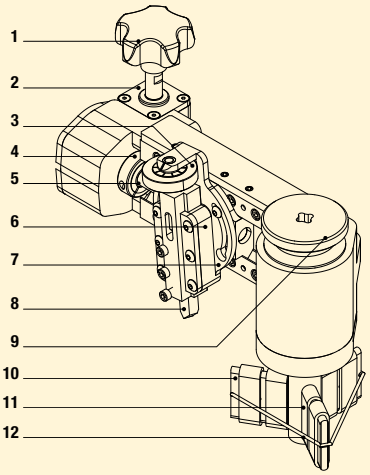

1. Feed Knob
2. Gear Box
3. Cutting Depth Adjustment with indicator: 0,127 mm (.005 inch) per mark
4. Locking Collar
5. Lead/Feed Screw
6. Tool Block
7. Swivel Slide
8. HSS 3/8" Tool Bits
9. Mandrel Locking Knob
10. Locator Extensions
11. Adjustable Locators
12. O-Ring

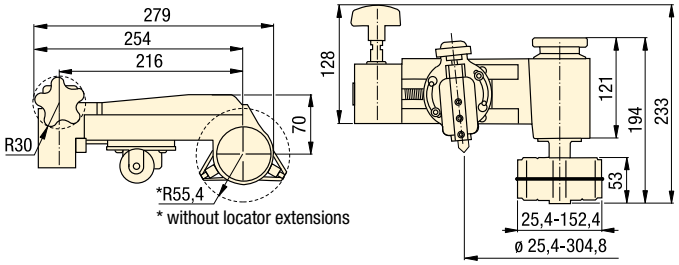

▼ *The Enerpac FF120 QuickFace has same precision and quality of finish as a lathe.*



▼ SELECTION CHART

Pipe Flange Cutting Diameter Range		Internal Pipe Mounting Diameter Range		Cutting Resultant Roughness	Model Number	
(mm)	(inch)	(mm)	(inch)	(Ra µ)		(kg)
25,4 - 304,8	1,0 - 12,0	25,4 - 152,4	1,0 - 6,0	3,2 - 12,5	**FF120**	6,8

Flange Spreading Tools

ENERPAC

The Equalizer™ range of patented flange spreading tools have been developed to aid and simplify the maintenance of flange joints. No longer will those tasked with separating flanges have to rely on using ropes and pulleys, podgers, tirfors, come-alongs or hammers – there is a safe, quick and effective alternative, the Equalizer™ range of spreaders. These spreaders use mechanical and hydraulic principles for separating flanges and can spread small, medium or large flange joints. Tool selection is made on the basis of the access gap between the flange faces, the flange size and the required scope of work.

SWi Flange Spreading Wedges:

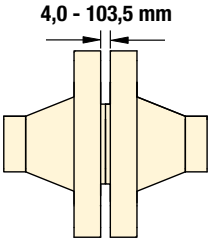

An innovative flange spreading wedge for use on small, medium or large flange joints with a minimum access gap of 4 mm. The SWi range includes ATEX approved options.

The SWi range has set the new standard for spreading flange joints powerfully, efficiently, effectively and safely. The tools offer the following features and benefits:

- Wider spreading - using the Standard Stepped Block accessories means the SWi range offers up to 30% more flange spreading distance than a traditional SW tool.
- Unrivalled power - the tools now offer up to 240 kN of spreading force when used in pairs, which provides additional confidence when spreading.
- Narrower jaws - the SWi5T tools are only 50 mm wide to help them fit more easily between flange bolts.
- Fully rotational handle – the handle swivels 360-degrees around the wedge head, so that the SWi tools can be used comfortably in all orientations.
- Easier maintenance – end-users will appreciate the ease with which the tools can be maintained. The supplied hex-key and a two step-process is all that's required to disassemble and reassemble the tools.
- No pinch points – the SWi range of tools has been engineered to overcome finger pinch-points.

MG Flange Spreading Tool:

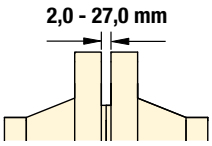

A mechanical tool for small diameter, low pressure flanges with a minimum access gap of 2 mm.

For use on smaller, lower pressure flange joints, this portable and flexible tool can be assembled in two alternative configurations that gives it twice the application range from one tool. The tool is locked onto the flange joint by the spreading bar preventing the risk of it falling from the flange joint.

SG Flange Spreading Tools:

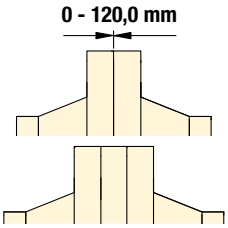

A unique flange spreader, ideal for situations where there is no access gap, or where there is a spacer, a wafer or butterfly valve positioned between the flanges.

Equalizer's unique Secure-Grip tools spread by locking into the flange bolt holes and pulling the mating flanges away from each other, the Secure Grip flange spreaders are locked on to the flanges when under load making them arguably the world's safest flange spreading tools.

VC Valve Change-Out Tools:

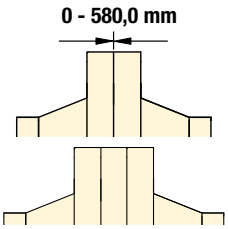

Using the same technology as the SG flange spreaders the VC range has been developed for valve removal applications.

The Equalizer™ VC Range of Valve Change-Out tools has been developed to assist in the removal of valves, spades/spacers or gaskets from large flange joints. The span of the tool is longer than a standard Secure-Grip Flange Spreader and is adjustable to enable the tool to operate in a range of aplications.

Tel: +45 63 12 83 00 | Email: ps@hymatik.com | www.hymatik.com | Hvidkaervej 27a, DK-5250 Odense SV, Denmark

Flange Maintenance Tools – Overview

Capacity (kN)	Spreading Distance (mm)	Tool Type and Function	Series		Page
77 - 240	4 - 103	**Flange Spreading Tools and Kits** Flange Spreading Wedges	SWi		320 ▶
140 - 240	6 - 103	**Flange Spreading Tools and Kits** Flange Spreading Wedges, ATEX-Certified	SWi		322 ▶
37 - 150	0 - 115	**Flange Spreading Tools and Kits** Hydraulic and Mechanical	SG		324 ▶
180 - 250	0 - 120	**Flange Spreading Tools and Kits** Hydraulic	SG		326 ▶
100	0 - 580	**Flange Spreading Tools and Kits** Secure-Grip Valve Change-Out Tools, Hydraulic	VC		328 ▶
68	2 - 27	**Flange Spreading Tool and Kit** Mechanical	MG		330 ▶
100	570 - 0	**Flange Pulling Tool** Hydraulic	FC		331 ▶
40 - 270	42 - 65	**Flange Alignment Tools and Kits** Wind Turbine Tower Flange Alignment Tools Hydraulic and Mechanical	TFA		332 ▶
0,3 - 1,0 ltr 2-Speed	–	**Hydraulic Sealed Hand Pumps** Standard and ATEX-Certified	HP		333 ▶
2 - 6 m	–	**Hydraulic Hoses** Standard and ATEX-Certified	144 302		333 ▶

Flange Spreading Tools

ENERPAC

▼ SWi5TI-S



SWi Series

FLANGE SPREADING WEDGES

Spreading Force:
77,0 - 240,0 kN

Spreading Distance:
4,0 - 103,5 mm

Maximum Operating Pressure:
700 bar *

* Only relevant for hydraulic tools

- **Practical, portable and lightweight**
- **Revolving handle to aid horizontal or vertical spreading**
- **Removable handle for improved access**
- **No finger pinch-point**
- **Increased step-depth on upper steps**
- **Safety lanyard – 1,0 m length**
- **Forged key components for strength and reliability**
- **Rapid disassembly and assembly**
- **Narrow jaw teeth – improved tool wear.**

Caution

A minimum of two Flange Spreading Tools must be used when opening flange joints. This will enable the operator to maintain an equal spreading distance across the flange faces.

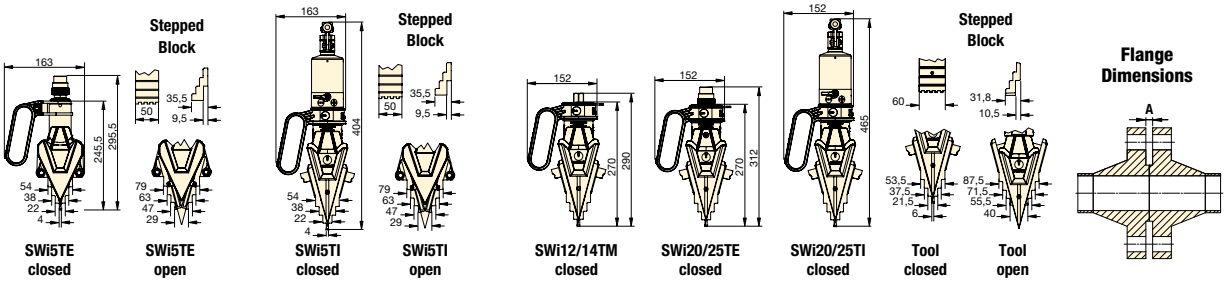

Model Number Tool Kit	Type	Maximum Spreading Force Per Tool (kN)	Spreading Distance Maximum * (mm)	Flange Dimensions Minimum Access Gap A (mm)	Jaw Width (mm)	Tool Weight (kg)	Kit Weight (kg)	Case Dimensions (mm)	Tool Number
SWi5TE-S	External Hydraulic	77,0	101,0	4,0	50,0	5,2	8,7	580 x 340 x 180	SWi5TE
SWi5TE-T	External Hydraulic	77,0	101,0	4,0	50,0	5,2	14,4	580 x 340 x 180	SWi5TE
SWi5TI-S	Integral Hydraulic	77,0	101,0	4,0	50,0	7,0	10,5	580 x 330 x 180	SWi5TI
SWi1214TMSTDSPB	Mechanical	140,0	103,5	6,0	60,0	6,2	13,0	580 x 330 x 165	SWi12/14TM
SWi2025TEMINSPB	External Hydraulic	240,0	103,5	6,0	60,0	6,4	11,6	580 x 330 x 165	SWi20/25TE
SWi2025TESTDSPB	External Hydraulic	240,0	103,5	6,0	60,0	6,4	20,7	920 x 500 x 205	SWi20/25TE
SWi2025TEMAXSPB	External Hydraulic	240,0	103,5	6,0	60,0	6,4	33,0	920 x 500 x 205	SWi20/25TE
SWi2025TISTDSPB	Integral Hydraulic	240,0	103,5	6,0	60,0	8,5	13,8	580 x 330 x 165	SWi20/25TI

* Using stepped blocks.

Tel: +45 63 12 83 00 | Email: ps@hymatik.com | www.hymatik.com | Hvidkaervej 27a, DK-5250 Odense SV, Denmark

Flange Spreading Tools

SWi5TE - Hydraulic Flange Spreading Wedge

SWi5TE-S - SWi5TE S Kit



1 x SWi5TE Flange Spreading Tool
1 x Standard Safety Block
1 x Lanyard
1 x Moulded Plastic Carry Case with Protective Foam Inserts

SWi5TE-T - SWi5TE T Kit



2 x SWi5TE Flange Spreading Tools
2 x Standard Safety Blocks
2 x Lanyards
1 x Moulded Plastic Carry Case with Protective Foam Inserts

1640016-01 - SWi5TE Stepped Block Kit



1 x Pair of SWi5TE Stepped Blocks
2 x M6 CSK Hex Screw
2 x Retaining Washer
1 x SWi5TE Large Safety Block
2 x Hex Key

SWi12/14TM - Mechanical Flange Spreading Wedge

SWi1214TMSTDSPB - SWi12/14TM STD Kit



1 x SWi12/14TM Flange Spreading Tool
1 x Torque Wrench with 22 mm Socket
1 x Set of Safety Blocks
1 x Pair of Stepped Blocks
1 x Lanyard
1 x Hex Key
1 x Moulded Plastic Carry Case

SWi20/25TE - Hydraulic Flange Spreading Wedge

SWi2025TEMINSPB - SWi20/25TE MIN Kit



1 x SWi20/25TE Flange Spreading Tool
1 x Set Safety Blocks
1 x Pair of Stepped Blocks
1 x Lanyard
1 x Hex Key
1 x Moulded Plastic Carry Case

SWi2025TESTDSPB - SWi20/25TE STD Kit



1 x SWi20/25TE Flange Spreading Tool
1 x 700 bar Hydraulic Hose, 2 m with 90° Elbow
1 x 700 bar HP350S Single-Port Sealed Hand Pump with Gauge
1 x Set Safety Blocks
1 x Pair of Stepped Blocks
1 x Lanyard
1 x Hex Key
1 x Moulded Plastic Carry Case

SWi2025TEMAXSPB - SWi20/25TE MAX Kit



2 x SWi20/25TE Flange Spreading Tools
2 x 700 bar Hydraulic Hoses, 2 m with 90° Elbow
1 x 700 bar HP550D Twin-Port Sealed Hand Pump with Gauge
2 x Set Safety Blocks
2 x Pair of Stepped Blocks
2 x Lanyards
2 x Hex Keys
1 x Moulded Plastic Carry Case

SWi5TI - Integral Hydraulic Flange Spreading Wedge

SWi5TI-S - SWi5TI S Kit



1 x SWi5TI Flange Spreading Tool
1 x Standard Safety Block
1 x Lanyard
1 x Moulded Plastic Carry Case with Protective Foam Inserts

1640016-01 - SWi5TE Stepped Block Kit



1 x Pair of SWi5TE Stepped Blocks
2 x M6 CSK Hex Screw
2 x Retaining Washer
1 x SWi5TE Large Safety Block
2 x Hex Key

SWi20/25TI - Integral Hydraulic Flange Spreading Wedge

SWi2025TISTDSPB - SWi20/25TI STD Kit



1 x SWi20/25TI Flange Spreading Tool
1 x Set of Safety Blocks
1 x Pair of Stepped Blocks
1 x Lanyard
1 x Hex Key
1 x Carry-Strap
1 x Moulded Plastic Carry Case

Flange Spreading Tools

ENERPAC

▼ SWi20/25TEEX



SWi Series

ATEX CERTIFIED FLANGE SPREADING WEDGES

Spreading Force:
140,0 - 240 kN

Spreading Distance:
6,0 - 103,5 mm

Maximum Operating Pressure:
700 bar *

* Only relevant for hydraulic tools

- **ATEX certified**
- **Practical, portable and lightweight**
- **Revolving handle to aid horizontal or vertical spreading**
- **Removable handle for improved access**
- **No finger pinch-point**
- **Increased step-depth on upper steps**
- **Safety lanyard – 1,0 m length**
- **Forged key components for strength and reliability**
- **Rapid disassembly and assembly**
- **Narrow jaw teeth – improved tool wear.**

Caution
A minimum of two Flange Spreading Tools must be used when opening flange joints. This will enable the operator to maintain an equal spreading distance across the flange faces.

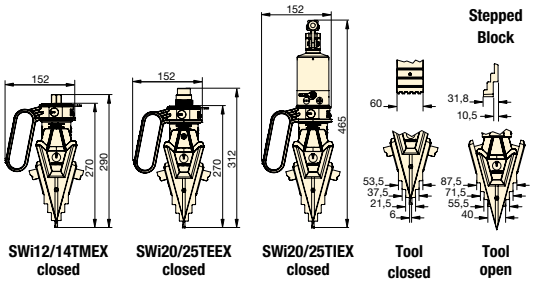

SWi12/14TMEX closed | SWi20/25TEEX closed | SWi20/25TIEX closed | Tool closed | Tool open

Flange Dimensions

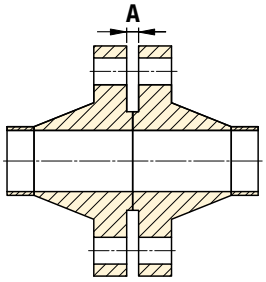

Model Number Tool Kit	Type	Maximum Spreading Force Per Tool (kN)	Spreading Distance Maximum * (mm)	Flange Dimensions Minimum Access Gap A (mm)	Jaw Width (mm)	Tool Weight (kg)	Kit Weight (kg)	Case Dimensions (mm)	Tool Number
SWi1214TMSTDEX	Mechanical	140,0	103,5	6,0	60,0	6,2	17,0	580 x 400 x 180	SWi12/14TMEX
SWi2025TEMINEX	External Hydraulic	240,0	103,5	6,0	60,0	6,4	15,0	580 x 400 x 180	SWi20/25TEEX
SWi2025TESTDEX	External Hydraulic	240,0	103,5	6,0	60,0	6,4	27,5	680 x 560 x 180	SWi20/25TEEX
SWi2025TEMAXEX	External Hydraulic	240,0	103,5	6,0	60,0	6,4	38,8	930 x 600 x 180	SWi20/25TEEX
SWi2025TISTDEX	Integral Hydraulic	240,0	103,5	6,0	60,0	8,5	17,5	580 x 400 x 180	SWi20/25TIEX

* Using stepped blocks.

Tel: +45 63 12 83 00 | Email: ps@hymatik.com | www.hymatik.com | Hvidkaervej 27a, DK-5250 Odense SV, Denmark

Flange Spreading Tools

SWi12/14TMEX -
ATEX Certified Mechanical Flange Spreading Wedge

II 2G Ex h IIB T5 Gb
II 2D Ex h IIIC T85°C Db

SWi1214TMSTDEX - SWi12/14TMEX STD Kit



1 x SWi12/14TMEX Flange Spreading Tool
1 x ATEX Torque Wrench with 22 mm Socket
1 x Set of Safety Blocks
1 x Pair of Stepped Blocks
1 x Lanyard
1 x Hex Key
1 x Aluminium Carry Case with Protective Foam Inserts

SWi20/25TIEX -
ATEX Certified Integral Hydraulic Flange Spreading Wedge

II 2G Ex h IIB T5 Gb
II 2D Ex h IIIC T100°C Db

SWi2025TISTDEX - SWi20/25TIEX STD Kit



1 x SWi20/25TIEX Flange Spreading Tool
1 x Set of Safety Blocks
1 x Pair of Stepped Blocks
1 x Lanyard
1 x Hex Key
1 x Carry-Strap
1 x Aluminium Carry Case with Protective Foam Inserts

SWi20/25TEEX -
ATEX Certified Hydraulic Flange Spreading Wedge

II 2G Ex h IIB T5 Gb
II 2D Ex h IIIC T100°C Db

SWi2025TEMINEX - SWi20/25TEEX MIN Kit



1 x SWi20/25TEEX Flange Spreading Tool
1 x Set Safety Blocks
1 x Pair of Stepped Blocks
1 x Lanyard
1 x Hex Key
1 x Aluminium Carry Case with Protective Foam Inserts

SWi2025TESTDEX - SWi20/25TEEX STD Kit



1 x SWi20/25TEEX Flange Spreading Tool
1 x 700 bar ATEX Hydraulic Hose, 2 m with 90° Elbow
1 x 700 bar HP350S ATEX Single-Port Sealed Hand Pump with Gauge
1 x Set Safety Blocks
1 x Pair of Stepped Blocks
1 x Lanyard
1 x Hex Key
1 x Aluminium Carry Case with Protective Foam Inserts

SWi2025TEMAXEX - SWi20/25TEEX MAX Kit



2 x SWi20/25TEEX Flange Spreading Tools
2 x 700 bar ATEX Hydraulic Hose, 2 m with 90° Elbow
1 x 700 bar HP550D ATEX Twin-Port Sealed Hand Pump with Gauge
2 x Set Safety Blocks
2 x Pair of Stepped Blocks
2 x Lanyards
2 x Hex Keys
1 x Aluminium Carry Case with Protective Foam Inserts

These tools have been designed for use in potentially explosive atmospheres which is:

- Group II (Non-mining equipment)
- Equipment **category 2** where explosive atmosphere is likely to occur in normal operation
- Can be applied in **zones 1 and 2** of gaseous explosive atmospheres and in **zones 21 and 22** of dust explosive atmosphere
- **Gas G** or **Dust D** with type of protection **Ex h** for non-electrical equipment
- Suitable for use with **Group IIB** of a gases and vapours (Ethylene group) and **Group IIIC** of dust (conductive dust)
- For hydraulic tools **T5** means that minimum ignition temperature of gas or vapor >**100°C**; **T100°C** means that minimum ignition temperature of a dust cloud ≥**150°C** and minimum ignition temperature of a 5mm dust layer ≥ **175°C**
- For mechanical tools **T6** means that minimum ignition temperature of gas or vapor >**85°C**; **T85°C** means that minimum ignition temperature of a dust cloud ≥**127,5°C** and minimum ignition temperature of a 5mm dust layer ≥ **160°C.**

These tools have been designed and manufactured in accordance with the following transposed harmonized European standards:

- **EN ISO 80079-36:2016** Explosive atmospheres - Part 36: Non-electrical equipment for explosive atmospheres - Basic method and requirements;
- **EN ISO 80079-37:2016** Explosive atmospheres - Part 37: Non-electrical type of protection constructional safety "c", control of ignition sources "b", liquid immersion "k":

Tel: +45 63 12 83 00 | Email: ps@hymatik.com | www.hymatik.com | Hvidkaervej 27a, DK-5250 Odense SV, Denmark

Flange Spreading Tools

ENERPAC

▼ SG11TM



- For use on all flange types with bolt-hole sizes ranging from 17,5 mm to 62,0 mm
- Unique expanding collet technology
- Little or no access gap required
- Secure bolt-hole locking mechanism.

Range of Application

For a detailed range of application please request the Secure-Grip Mechanical or Hydraulic Operator Instruction Sheet.

Caution

A minimum of two Flange Spreading Tools must be used when opening flange joints. This will enable the operator to maintain an equal spreading distance across the flange faces.

OPERATING BENEFITS

- Time-saving, simple operation
- Measurable, controlled flange spreading force
- Virtually universal, the Secure-Grip Flange Spreader range covers ANSI, DIN, SPO, ASME, API and BS flanges.

SG4TM
SG6TM
SG11TM

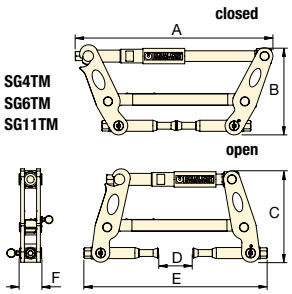

SG13TE
SG15TE

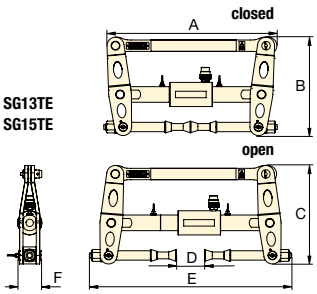

Flange Dimensions

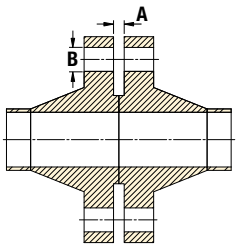

Model Number Tool Kit	Type*	Maximum Spreading Force Per Tool (kN)	Spreading Distance Maximum (mm)	Flange Dimensions (mm)		Tool Dimensions (mm)						Tool Weight (kg)	Kit Weight (kg)	Case Dimensions (mm)	Tool Number
				Minimum Access Gap A	Bolt-hole Diameter B	A	B	C	D	E	F				
SG4TMSTD	M	37,0	75	0	17,5 - 23	398	190	182	75	385	48	4,5	12,8	520x375x165	SG4TM
SG6TMSTD	M	60,0	80	0	24 - 30	468	245	252	80	444	52	7,5	16,0	640x540x165	SG6TM
SG11TMSTD	M	110,0	90	0	30 - 39	516	250	263	90	462	60	10,5	20,0	640x540x165	SG11TM
SG13TESTD	H	130,0	115	0	38 - 49	516	303	314	115	630	72	21,5	40,5	890x570x165	SG13TE
SG15TESTD	H	150,0	100	0	47,5 - 62	600	346	380	100	720	80	26,0	45,0	890x570x165	SG15TE

* M = Mechanical
H = Hydraulic

Flange Spreading Tools

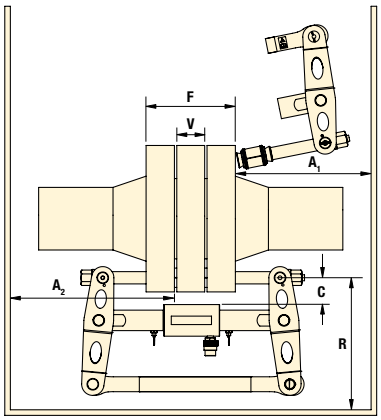

Spreading Force:
37,0 - 150,0 kN

Spreading Distance:
0 - 115 mm

Maximum Operating Pressure:
700 bar *

* Only relevant for hydraulic tools

SG Series



Model Number	Flange Joint Thickness F			Valve / Spacer Thickness V			Flange Clearance C		Radial Space R		Axial Space (for installation) A_1		Axial Space (installed) A_2		Tool Number
	Min. (mm)	Max. (mm)	Measured: From / To	Min. (mm)	Max. (mm)	Measured: From / To	Max. (mm)	Measured: From / To	Min. (mm)	Measured: From / To	Min. (mm)	Measured: From / To	Min. (mm)	Measured: From / To	
SG4TMSTD	60	185	Outside face of flange / Outside face of flange	0*	45*	Inside face of flange / Inside face of flange	50	Bolt-hole circle / Largest OD of valve/spacer	170	Bolt-hole circle / Closest obstruction	170	Outside face of flange / Closest obstruction	200	Inner face of flange / Closest obstruction	SG4TM
SG6TMSTD	60	210		0*	50*		55		230		200		234		SG6TM
SG11TMSTD	96	240		0*	60*		60		240		223		258		SG11TM
SG13TESTD	120	310		0*	95*		70		280		310		260		SG13TE
SG15TESTD	140	400		0*	80*		80		370		380		315		SG15TE

* Short Collet Holder Kits (SCH) are available which can offer improved range of application.

SG4TM MECHANICAL TOOL KIT



1 X SG4TM Tool
1 X 150 mm Vernier Calliper
1 X 3/8" Drive Torque Wrench and 16 mm Socket
1 X Safety Block
2 X M16 (5/8") Collets
2 X M20 (3/4") Collets
1 x Aluminium Carry Case with Protective Foam Inserts

SG6TM MECHANICAL TOOL KIT



1 x SG6TM Tool
1 X 150 mm Vernier Calliper
1 X 3/8" Drive Torque Wrench and 21 mm Socket
1 x Safety Block
2 x M24 (7/8") Collets
2 x M27 (1") Collets
1 x Aluminium Carry Case with Protective Foam Inserts

SG11TM MECHANICAL TOOL KIT



1 x SG11TM Tool
1 x 150 mm Vernier calliper
1 x 1/2" Drive torque wrench and 24 mm socket
1 x Safety block
2 x M30 (1-1/8") Collets
2 x M33 (1-1/4") Collets
2 x M36 (1-3/8") Collets
1 x Aluminium Carry Case with Protective Foam Inserts

SG13TE HYDRAULIC TOOL KIT



1 x SG13TE Tool
1 x 700 bar HP550S Single Port Sealed Hand Pump with Gauge
1 x 700 bar Hydraulic Hose, 2 m
1 x 150 mm Vernier Calliper
1 x 1/2" Square Drive Flexible Handle
1 x 30 mm Socket
1 x Safety Block
2 x M39 (1-1/2") Collets
2 x M42 (1-5/8") Collets
2 x M45 (1-3/4") Collets
1 x Aluminium Carry Case with Protective Foam Inserts

SG15TE HYDRAULIC TOOL KIT



1 x SG15TE Tool
1 x 700 bar HP550S Single Port Sealed Hand Pump with Gauge
1 x 700 bar Hydraulic Hose, 2 m
1 x 300 mm Vernier Calliper
1 x 1/2" Square Drive Flexible Handle
1 x 36 mm Socket
1 x Safety Block
2 x M48 (1-7/8") Collets
2 x M52 (2") Collets
2 x M56 (2-1/4") Collets
1 x Aluminium Carry Case with Protective Foam Inserts

Flange Spreading Tools

ENERPAC

▼ SG18TE & SG25TE



- **Applicable for larger-sized flanges**
- **Actuated by an external hand pump**
- **Suitable for bolt holes from 59,5 mm to 108 mm.**

Range of Application

For a detailed range of application please request the Secure-Grip In-Line Hydraulic Operator Instruction Sheet.

Caution

A minimum of two Flange Spreading Tools must be used when opening flange joints. This will enable the operator to maintain an equal spreading distance across the flange faces.

SG18TE

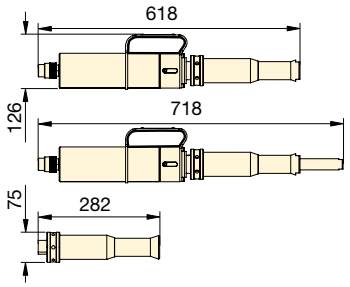

SG25TE

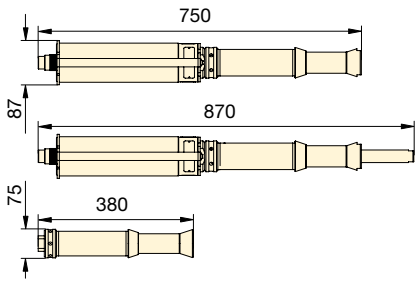

Flange Dimensions

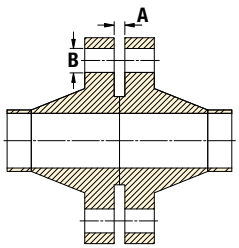

Model Number Tool Kit	Type	Maximum Spreading Force Per Tool (kN)	Spreading Distance Maximum (mm)	Flange Dimensions (mm)		Tool Weight (kg)	Kit Weight (kg)	Case Dimensions (mm)	Tool Number
				Minimum Access Gap A	Bolt-hole Diameter B				
SG18TESTD	Hydraulic	180,0	100	0	59,5 - 75	14	45	890 x 570 x 165	SG18TE
SG25TESTD	Hydraulic	250,0	120	0	75 - 108	24	50	890 x 570 x 165	SG25TE

Tel: +45 63 12 83 00 | Email: ps@hymatik.com | www.hymatik.com | Hvidkaervej 27a, DK-5250 Odense SV, Denmark

Flange Spreading Tools

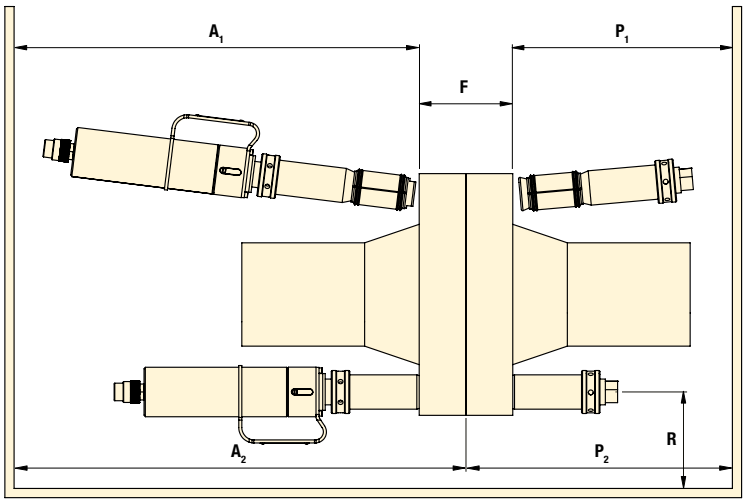

SG Series



Spreading Force:
180,0 - 250,0 kN

Spreading Distance:
0 - 120 mm

Maximum Operating Pressure:
700 bar

Model Number Tool Kit	Flange Joint Thickness F			Radial Space R		Axial Space (for installation) A1		Axial Space (installed) A2		Axial Plug Space (for installation) P1		Axial Plug Space (installed) P2		Tool Number
	Min. (mm)	Max. (mm)	Measured: From / To	Min. (mm)	Measured: From / To	Min. (mm)	Measured: From / To	Min. (mm)	Measured: From / To	Min. (mm)	Measured: From / To	Min. (mm)	Measured: From / To	
SG18TESTD	190	450	Outside face of flange/ Outside face of flange	55	Bolt-hole circle / Closest obstruction	620	Outside face of flange/ Closest obstruction	900	Inner face of flange/ Closest obstruction	283	Outside face of flange/ Closest obstruction	283	Inner face of flange/ Closest obstruction	SG18TE
SG25TESTD	210	570		55		750		1100		380		380		SG25TE

SG18TE HYDRAULIC TOOL KIT



1 x SG18TE Tool
1 x Spreading Plug
1 x 700 bar HP550S Single Port Sealed Hand Pump with Gauge
1 x 700 bar Hydraulic Hose, 2 m
1 x 300 mm Vernier Calliper
1 x 12.5 mm Spacer Plate
1 x 5mm Allen Key
1 x 50 mm Spacer
1 x Safety Block
2 x M60 (2-3/8") Collets
2 x M64 (2-1/2") Collets
2 x M70 (2-3/4") Collets
1 x Aluminium Carry Case with Protective Foam Inserts

SG25TE HYDRAULIC TOOL KIT



1 x SG25TE Tool
1 x Spreading Plug
1 x 700 bar HP550S Single Port Sealed Hand Pump with Gauge
1 x 700 bar Hydraulic Hose, 2 m
1 x 300 mm Vernier Calliper
1 x 12.5 mm Spacer Plate
1 x Safety Block
1 x Aluminium Carry Case with Protective Foam Inserts

SG25TE COLLETS (AVAILABLE SEPARATELY)

Model Number	Description
673601-01	2 x M76 (3") Collets
674801-01	2 x M90 (3-1/2") Collets
673901-01	2 x M80 (3-1/4") Collets
675101-01	2 x M95 (3-3/4") Collets
674501-01	2 x M84 (3-3/8") Collets
675601-01	2 x M100 (4") Collets

Flange Spreading Tools

ENERPAC

▼ VC10TE



Secure-Grip Valve Change-Out Tools

Caution

A minimum of two Flange Spreading Tools must be used when opening flange joints. This will enable the operator to maintain an equal spreading distance across the flange faces.

The Actuator and Extension Subassembly can be assembled into 4 different configurations to suit a variety of applications. For a detailed range of application please request the VC10 Operator Instruction Sheet.

- **Assists in the removal of wafer/butterfly valves, spades/spacers or gaskets from large flange joints**
- **Tool span is longer than a standard Secure-Grip Flange Spreader**
- **Adjustable to enable the tool to operate in a range of situations.**

PATENTED SECURE-GRIP SYSTEM:

- **Unique expanding collet technology**
- **Secure bolt-hole locking mechanism**
- **Unique technology makes the Secure-Grip arguably the safest flange spreader available in the world today**
- **Virtually universal, the Secure-Grip Flange Spreader range will cover ANSI, DIN, Norsok L005, ASME, API and BS Flanges**
- **Time-saving, simple operation.**

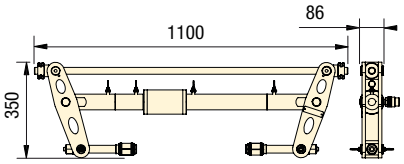

Flange Dimensions

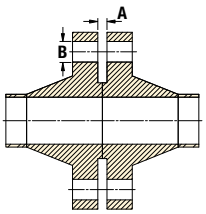

Model Number Tool Kit	Type*	Maximum Spreading Force Per Tool (kN)	Spreading Distance Maximum (mm)	Flange Dimensions (mm)		Tool Kit Weight (kg) (2 per Maxi Kit)	Pump Kit Weight (kg)	Gross Kit Weight (kg)	Tool Case Dimensions (mm)	Pump Case Dimensions (mm)	Tool Number
				Minimum Access Gap A	Bolt-hole Diameter B						
VC10/13TESTD	H	100	580	0	38 - 49	50	27	77	550x1200x170	550x1200x170	VC10/13TE
VC10/13TEMAX	H	100	580	0	38 - 49	50	30	130	550x1200x170	550x1200x170	VC10/13TE
VC10/15TESTD	H	100	560	0	47,5 - 62	53	27	80	550x1200x170	550x1200x170	VC10/15TE
VC10/15TEMAX	H	100	560	0	47,5 - 62	53	30	136	550x1200x170	550x1200x170	VC10/15TE
VC10/18TESTD	H	100	514	0	59,5 - 75	58	27	85	550x1200x170	550x1200x170	VC10/18TE
VC10/18TEMAX	H	100	514	0	59,5 - 75	58	30	146	550x1200x170	550x1200x170	VC10/18TE
VC10/25TESTD	H	100	490	0	75 - 108	58	27	85	550x1200x170	550x1200x170	VC10/25TE
VC10/25TEMAX	H	100	490	0	75 - 108	58	30	146	550x1200x170	550x1200x170	VC10/25TE

* H = Hydraulic

Flange Spreading Tools

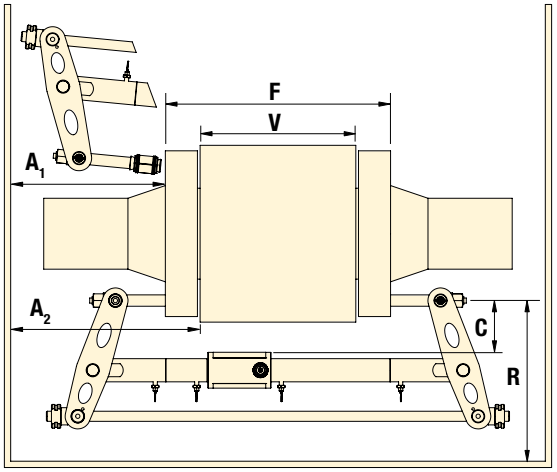

VC Series



Spreading Force:
100 kN

Spreading Distance:
0 - 580 mm

Maximum Operating Pressure:
700 bar

Model Number Tool Kit	Flange Joint Thickness F			Valve / Spacer Thickness V			Flange Clearance C	Radial Space R	Axial Space (for installation) A_1	Axial Space (installed) A_2	Tool Number
	Min. (mm)	Max. (mm)	Measured: From / To	Min. (mm)	Max. (mm)	Measured: From / To	Measured: From / To	Measured: From / To	Measured: From / To	Measured: From / To	
VC10/13TESTD	110	690	Outside face of flange / Outside face of flange	0*	580*	Inside face of flange / Inside face of flange	Bolt-hole circle / Largest OD of valve/spacer - max. 130 mm	Bolt-hole circle / Closest obstruction - min. 360 mm	Outside face of flange / Closest obstruction - min. 300 mm	Inner face of flange / Closest obstruction - min. 370 mm	VC10/13TE
VC10/13TEMAX	110	690		0*	580*						VC10/13TE
VC10/15TESTD	130	690		0*	560*						VC10/15TE
VC10/15TEMAX	130	690		0*	560*						VC10/15TE
VC10/18TESTD	176	690		0*	514*						VC10/18TE
VC10/18TEMAX	176	690		0*	514*						VC10/18TE
VC10/25TESTD	200	690		0*	490*						VC10/25TE
VC10/25TEMAX	200	690		0*	490*						VC10/25TE

* Short Collet Holder Kits (SCH) are available which can offer improved range of application.

TOOL KITS
(1 PER STD KIT, 2 PER MAX KIT)



VC10/13TE
1 x VC10/13TE Tool
2 x M39 (1-1/2") Collets
2 x M42 (1-5/8") Collets
2 x M45 (1-3/4") Collets
1 x Aluminium Carry Case with Protective Foam Inserts

VC10/18TE
1 x VC10/18TE Tool
2 x M60 (2-3/8") Collets
2 x M64 (2-1/2") Collets
2 x M70 (2-3/4") Collets
1 x Aluminium Carry Case with Protective Foam Inserts

VC10/15TE
1 x VC10/15TE Tool
2 x M48 (1-7/8") Collets
2 x M52 (2") Collets
2 x M56 (2-1/4") Collets
1 x Aluminium Carry Case with Protective Foam Inserts

VC10/25TE
1 x VC10/25TE Tool
1 x Aluminium Carry Case with Protective Foam Inserts

PUMP KITS



For STD Tool Kits
1 x 700 bar HP550S Single Port Hydraulic Hand Pump
1 x Hydraulic Gauge with Manifold
1 x 700 bar Hydraulic Hose, 2,0 m
1 x Secure Grip Safety Block
1 x Square Drive Flexible Handle
1 x Vernier Calliper
1 x Aluminium Carry Case with Protective Foam Inserts

For MAX Tool Kits
1 x 700 bar HP1000D Twin Port Hydraulic Hand Pump
2 x Hydraulic Gauges with Manifolds
2 x 700 bar Hydraulic Hoses, 2,0 m
2 x Secure Grip Safety Blocks
1 x Square Drive Flexible Handle
1 x Vernier Calliper
1 x Aluminium Carry Case with Protective Foam Inserts

Collet Sizing
It is important that the correct size of collet is used. An undersized collet could allow the collet holder to pull through its bore. An oversized collet has the potential to become jammed in the bolt-hole.

Range of Application
For a detailed range of application please request the Hydraulic Secure-Grip Valve Change-Out Tool Operator Instruction Sheet.

VC10/25TE COLLETS (AVAILABLE SEPARATELY)

Model Number	Description
673601-01	2 x M76 (3") Collets
673901-01	2 x M80 (3-1/4") Collets
674501-01	2 x M84 (3-3/8") Collets
674801-01	2 x M90 (3-1/2") Collets
675101-01	2 x M95 (3-3/4") Collets
675601-01	2 x M100 (4") Collets

Flange Spreading Tools

ENERPAC

▼ MG7TM



MG Series

FLANGE SPREADING TOOL

Spreading Force:
68,0 kN

Spreading Distance:
2,0 - 27,0 mm

Range of Application

For a detailed range of application please request the MG7TM Operator Instruction Sheet.

- **Reversible leg design giving greater range of applications**
- **Unique double-angled wedge produces a greater spreading force without reducing spreading distance**
- **Robust lightweight tool**
- **Spreading force of 68,0 kN.**

OPERATING BENEFITS

- **Locks on to flange joint**
- **Safe, quick and easy operation**
- **Saves time and cost.**

Caution

A minimum of two Flange Spreading Tools must be used when opening flange joints. This will enable the operator to maintain an equal spreading distance across the flange faces.

MG7TMSTD Standard Kit



1 x MG7TM Tool
2 x Spreading Bar
1 x Moulded Plastic Carry Case

Tool retracted and advanced using large (Ø 20mm) spreading bar

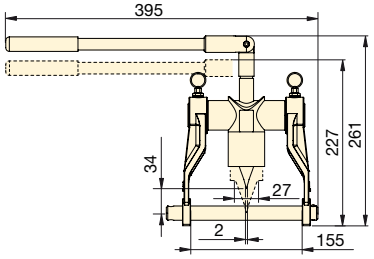

Tool retracted and advanced using small (Ø 16mm) spreading bar

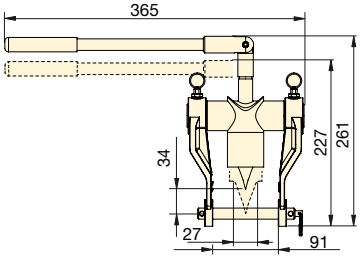

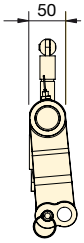

Flange Dimensions

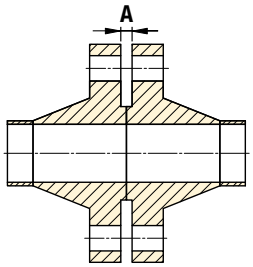

Model Number Tool Kit	Type	Maximum Spreading Force Per Tool (kN)	Spreading Distance Maximum (mm)	Flange Dimensions Minimum Access Gap A (mm)	Wedge Width (mm)	Tool Weight (kg)	Kit Weight (kg)	Case Dimensions (mm)	Tool Number
MG7TMSTD	Mechanical	68,0	27,0	2,0	45,0	5,0	5,5	360 x 300 x 90	MG7TM

Flange Pulling Tools

▼ FC10TE



FC Series

FLANGE CLOSING TOOLS

Closing Force:
100 kN

Closing Distance:
570 - 0 mm

Maximum Operating Pressure:
700 bar

Caution

A minimum of two flange closing tools must be used when flange pulling. This will enable the operator to maintain an even gap between flange faces and prevent flange / gasket damage.

- **Applicable to all flanges with a bolt-hole diameter of 1 inch or greater, including ANSI, DIN, Norsok L005, ASME and BS flanges**
- **Slide and lock collet system**
- **Low profile tool**
- **Can be used on all vertical and horizontal flanges including ANSI, API, BS, DIN & Norsok L005**
- **Robust yet light weight**
- **Subsea compatible**
- **Reciprocating hydraulic action.**

OPERATING BENEFITS

- **Reduction in operator fatigue**
- **Reduction in pinch point**
- **Quick and easy to use.**

FC10TESTD STD Kit



1 x FC10TE Tool
1 x 700 bar Hydraulic Hose, 2 m long
1 x 700 bar HP550S Single Port Sealed Hand Pump with Gauge
1 x Aluminium Carry Case with Protective Foam Inserts

FC10TEMAX MAX Kit



2 x FC10TE Tool
2 x 700 bar Hydraulic Hoses, 2 m long
1 x 700 bar HP550D Twin Port Sealed Hand Pump with Gauge
1 x Aluminium Carry Case with Protective Foam Inserts

Flange Dimensions

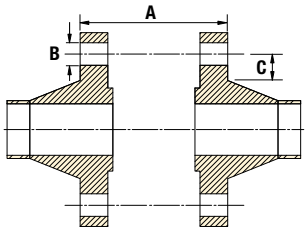

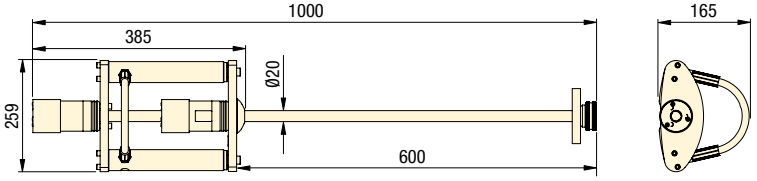

Model Number Tool Kit	Type	Maximum Closing Force Per Tool (kN)	Closing Distance (mm)	Flange Dimensions (mm)			Tool Weight (kg)	Kit Weight (kg)	Box/Case Dimensions (mm)	Tool Number
				A	B min	C min				
FC10TESTD	Hydraulic	100	570	16-570	25,4*	32	11	23,5	890 x 570 x 165	FC10TE
FC10TEMAX	Hydraulic	100	570	16-570	25,4*	32	11	36,5	890 x 570 x 165	FC10TE

* For hole diameter greater than 45mm, please contact Enerpac.

Flange Alignment Tools

ENERPAC

▼ TFA15TI



TFA Series

WIND TURBINE TOWER FLANGE ALIGNMENT TOOLS

Hook Force:
40 - 270 kN

Aligning Distance:
42 - 65 mm

The TFA Wind Turbine Tower Flange Alignment Tools have been developed to aid the alignment of large flanges on the inside of wind turbine towers during their assembly or installation.

- **Assists in aligning / de-ovalizing large internal pipe flanges**
- **Helps resolve bolt-hole misalignment within tower sections of wind turbine towers**
- **Can be used both on and offshore.**

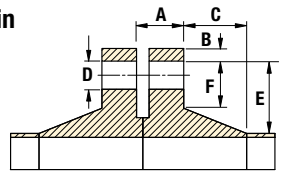

Flange Dimensions

TFA4TM Mechanical Tool Kit



1 x TFA4TM Tool
1 x Torque Wrench
1 x Moulded Plastic Carry Case

TFA12TE / TFA15TE External Hydraulic Tool Kit



1 x TFA12TE or TFA15TE Tool
1 x Safety Lanyard
1 x Aluminium Carry Case with Protective Foam Inserts

TFA12TI / TFA15TI Internal Hydraulic Tool Kit



1 x TFA12TI or TFA15TI Tool
1 x Aluminium Carry Case with Protective Foam Inserts

TFA4TM

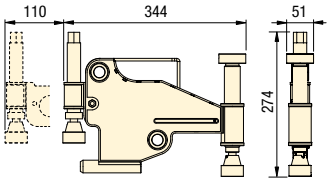

TFA12TE
TFA15TE

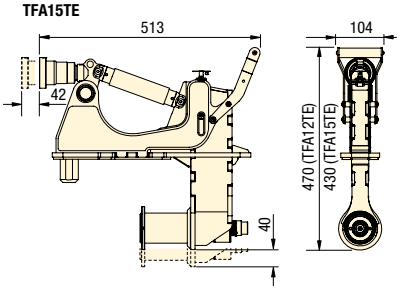

TFA12TI
TFA15TI

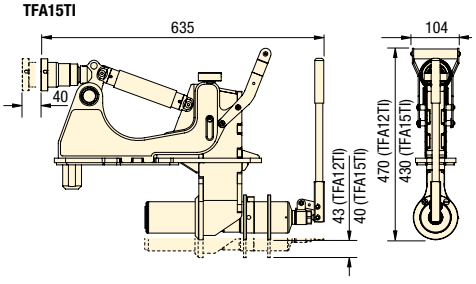

Model Number Tool Kit	Type*	Maximum Hook Force Per Tool (kN)	Maximum Aligning Distance (mm)	Maximum Operating Pressure (bar)	Flange Dimensions (mm)						Tool Weight (kg)	Kit Weight (kg)	Box/Case Dimensions (mm)	Tool Number
					A	B	C	D min	E	F min				
TFA4TMSTD	M	40	42	-	36-135	0-55	0-231	25	0-105	24	8,1	18,0	600x370x200	TFA4TM
TFA12TEMIN	H	240	65	510	129-178	110-241	0-167	45	87-125	62	19,3	28,4	640x540x165	TFA12TE
TFA15TEMIN	H	270	65	700	89-138	110-241	0-167	45	87-125	62	18,9	28,0	640x540x165	TFA15TE
TFA12TIMIN	H	240	65	-	129-178	113-241	0-167	45	87-125	62	21,9	31,0	585x900x160	TFA12TI
TFA15TIMIN	H	270	65	-	89-138	113-241	0-167	45	87-125	62	21,5	30,6	585x900x160	TFA15TI

* M = Mechanical
H = Hydraulic

Hand Pumps & Hoses

▼ **HP350DMIN**



HP Series

HYDRAULIC SEALED HAND PUMPS

Maximum Pressure Rating:

1st Stage: 13,8 bar
2nd Stage: 700 bar

Pump Type:

2-Speed

- **HP-S , HP-D and HP-SD pump ranges are operable at all angles and are highly resistant to accidental spillage of hydraulic fluid. (certified)**
- **The Single-Port and Twin-Port Hand Pumps are also available with ATEX rating, which are certified for use in hazardous areas II 2G Ex h IIB T5 Gb, II 2D Ex h IIIC T100°C Db.**

Pump Ratings

The Hydraulic Single Port,Twin Port and Double-Acting Hand-Pump (and hoses) are tailored for use with hydraulic equipment. Each pump's output is regulated to 700 bar and is delivered from threaded 3/8" NPT output ports. The pumps and hoses can be used with any 700 bar rated hydraulic equipment within their oil capacity specification. The HP range of hydraulic hand-pumps have been designed with a seal oil reservoir, which allows the pumps to be used in any orientation without the risk of oil spills or air contamination

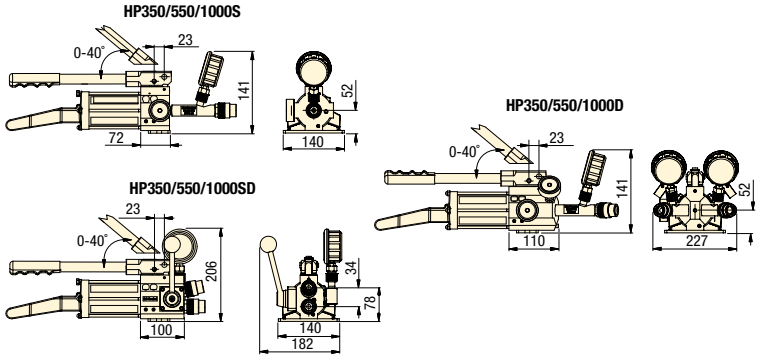

700 BAR HOSES

AVAILABLE TO PURCHASE SEPARATELY

Model Number	Description
302701-01	HYDRAULIC HOSE 2M
302702-01	HYDRAULIC HOSE 4M
302705-01	HYDRAULIC HOSE 3M
302706-01	HYDRAULIC HOSE 5M
302707-01	HYDRAULIC HOSE 6M
1440008-01	ATEX HYDRAULIC HOSE 2M
1440013-01	ATEX HYDRAULIC HOSE 4M
1440014-01	ATEX HYDRAULIC HOSE 6M

Model Number Hand Pump Kit		Type*	Nominal Oil Capacity (cc)	Useable Oil Capacity (cc)	Oil Volume per Stroke (cc)		Max. Handle Effort (kgf)	Piston Stroke (mm)	Overall Length (mm)	Box Dimensions (mm)	Pump Weight (kg)	Kit Weight (kg)	Tool Number
Standard	ATEX				1st Stage	2nd Stage							
HP350SMIN	HP350SMINEX	SA, SP	350	300	3,62	0,77	33	18	554	250 x 180 x 600	4,4	4,9	HP350S
HP550SMIN	HP550SMINEX	SA, SP	550	580	3,62	0,77	25	18	643	250 x 180 x 700	5,1	5,9	HP550S
HP1000SMIN	HP1000SMINEX	SA, SP	1000	1110	3,62	0,77	21	18	867	250 x 180 x 900	6,1	7,1	HP1000S
HP350DMIN	HP350DMINEX	SA, TP	350	300	3,62	0,77	33	18	580	250 x 180 x 600	6,5	7,2	HP350D
HP550DMIN	HP550DMINEX	SA, TP	550	580	3,62	0,77	25	18	669	250 x 180 x 700	7,2	8,1	HP550D
HP1000DMIN	HP1000DMINEX	SA, TP	1000	1110	3,62	0,77	21	18	893	250 x 180 x 900	7,1	9,3	HP1000D
HP350SDMIN	–	DA	350	300	3,62	0,77	33	18	456	250 x 180 x 600	5,3	5,7	HP350SD
HP550SDMIN	–	DA	550	580	3,62	0,77	25	18	579	250 x 180 x 700	5,7	6,0	HP550SD
HP1000SDMIN	–	DA	1000	1110	3,62	0,77	31	18	769	250 x 180 x 900	5,9	6,3	HP1000SD

* SA = Single Acting DA = Double Acting
SP = Single Port TP = Twin Port

Enerpac Heavy Lifting Technology

ENERPAC

Enerpac Heavy Lifting Technology provides customers with tailored solutions, combining hydraulics, steel fabrication and electronic control technology. Global Leader providing best in class solutions for safe and precise positioning of heavy loads.

With more than 50 years supporting industrial markets, Enerpac has gained the unique and in-depth expertise that is respected by industrial professionals around the world. Across every continent, Enerpac's network of application engineers, authorized distributors and technical service centers can reach any location, and deliver innovative solutions, technical assistance and quality products.

Enerpac's complete line of standard and customized products and a unique systems approach offers the benefits of safety and efficiency to applications where high forces are required.

Whether constructing a signature bridge across a deep valley, lifting a national landmark for seismic retrofit or simultaneously testing hundreds of foundation pilings to support a new building, Enerpac will supply the hydraulic solutions to get the job done safely and efficiently.



Precision lift and position of heavy loads



Synchronous superlift and launch



Bridge lifting and launching



Jacking with high capacity precision control



Synchronous hoisting and load positioning



Incremental bridge lifting



Transportation



Special high tonnage cylinders for the Pioneering Spirit lifting beams

Tel: +45 63 12 83 00 | Email: ps@hymatik.com | www.hymatik.com | Hvidkaervej 27a, DK-5250 Odense SV, Denmark

Heavy Lifting Technology - Section Overview

Capacity ton (kN)	Type and Capabilities	Series		Page
Flow: 0,27 - 2,10 l/min **Power: 0,75 - 15 kW**	**Split-Flow Hydraulic Pumps** Multiple Outlets with Equal Flow for Lifting and Lowering	**SFP**		**336** ▶
Flow: 0,75 - 4,80 l/min **Power: 3,5 - 7,5 kW**	**Synchronous Lifting Systems, standard pump models** The multi-functional synchronous lifting system	**EVO**		**340** ▶
50 -100 (500 - 1000)	**Self-Locking Cube Jack** Incremental lifting, automated mechanical locking	**SCJ**		**342** ▶
50 - 200 (498 - 1995)	**Climbing Jacks** A simple solution to incremental lifting	**BLS**	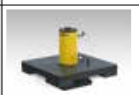	**346** ▶
250 - 500 (2500 - 5000)	**Jack-Up Systems** Synchronically lift, mechanically hold, incremental lifting	**JS**		**348** ▶
15 - 1250 (147 - 12.250)	**Heavy Lifting Strand Jacks** High capacity precision control	**HSL**		**350** ▶
55 - 110 (539 - 1078)	**Synchronous Hoisting Systems - SyncHoist** Precision positioning jacks	**SHC** **SHP**		**352** ▶
40 - 1100 (400 - 10.484)	**Telescopic Hydraulic Gantries** Precision lift and position of heavy loads	**ML** **SL, SBL**		**354** ▶ **356** ▶
100 - 250 (860- 2500)	**Skidding Systems** The ideal jack and slide solution	**LH** **HSK**		**358** ▶ **362** ▶
127 (1250) **25 - 50 m/hr**	**Electric Trolley System** Synchronized travel	**ETR**		**364** ▶
200 - 400 (2000- 4000)	**Hydraulic Turntables** Controlled rotation of heavy loads	**ETT**	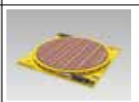	**366** ▶
60 (600) **Speed: 3 - 1,5 km/hr**	**Self-Propelled Modular Transporters** Hydraulic strength in a linear drive transport system	**SPMT**		**367** ▶
–	**Custom Heavy Lifting Solutions** **Solution Consultations, On-Demand Support**	–		**368** ▶ **370** ▶

SFP-Series, Split-Flow Hydraulic Pumps

ENERPAC

▼ **SFP414SW and SFP403SW** (Gauges and retract valves not shown)



Multiple Outlets with Equal Flow for Lifting and Lowering

- **2, 4, 6 or 8 split-flow outlets**
- **Individual or simultaneously operation of valves, with advance/hold/retract function**
- **Joystick (manual) controlled or pendant (solenoid) controlled valves**
- **Flow per outlet ranging from 0,27 to 2,10 l/min at 700 bar**
- **For double- and single-acting cylinders**
- **Adjustable pressure relief valve per circuit**
- **Reservoir: 20, 40 or 150 litres**
- **All models include pressure gauges.**

Typical Split-Flow Pump Applications

For lifting and lowering applications on multiple points, Split-Flow Pumps are a far better alternative than using independently operated pumps. Where synchronization of maximum 4% is acceptable, Split-Flow Pumps are a safe and economical solution.

The SFP-Series pumps feature both single and synchronized multiple outlet control either through joystick or pendant operation.

Application examples:

- Bridge deck lifting for bearing maintenance
- Stage lifting in construction and shipbuilding
- Skidding to move structures and buildings
- Levelling of constructions such as wind turbines.

▼ *Step-by-step stage lifting an old windmill using double-acting RR506 cylinders powered by a split-flow pump.*





Remote Control Pendant

Split-Flow pumps with solenoid valves include a remote pendant with selector switches for each individual outlet, allowing single or multiple cylinder operation.



High Pressure Hoses

Enerpac offers a complete line of high quality hydraulic hoses. To ensure the integrity of your system, specify only genuine Enerpac hydraulic hoses.

Page: 128

Tel: +45 63 12 83 00 | Email: ps@hymatik.com | www.hymatik.com | Hvidkaervej 27a, DK-5250 Odense SV, Denmark

Split-Flow Hydraulic Pumps

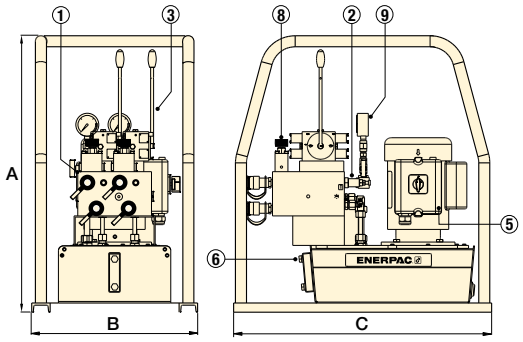

◀ SFP-Series with 20 litres reservoir (shown with 2 split-flow outlets)

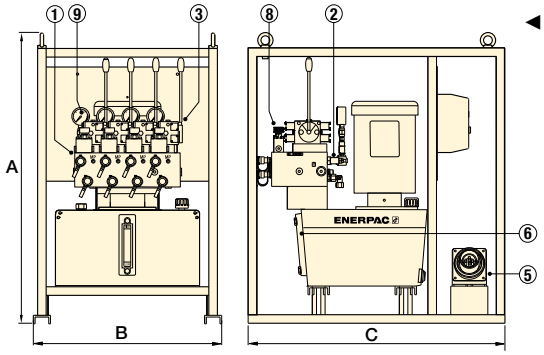

◀ SFP-Series with 40 litres reservoir (shown with 4 split-flow outlets)

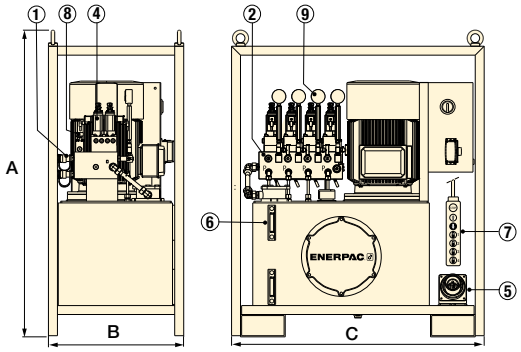

◀ SFP-Series with 150 litres reservoir (shown with 4 split-flow outlets)

Number of Split-Flow Outlets	Usable Oil Capacity (litres)	Oil Flow per Outlet @ 700 bar (l/min)	Pump Model Number 4/3 Valve Operation Advance/Hold/Retract Manual (Joystick)	Pump Model Number 4/3 Valve Operation Advance/Hold/Retract 24 V Solenoid (Pendant)	Motor Size 400 V, 3ph 50 Hz (kW)	Dimensions (mm) A	Dimensions (mm) B	Dimensions (mm) C	(kg)
2	20	0,27	**SFP202MW**	–	0,75	748	450	700	115
4	40	0,30	**SFP403MW**	**SFP403SW**	2,2	1016	640	970	257
	135	0,90	**SFP409MW**	**SFP409SW**	5,5	1356	605	1160	475
	135	1,40	**SFP414MW**	**SFP414SW**	7,5	1356	605	1160	490
	135	2,10	**SFP421MW**	**SFP421SW**	10	1356	605	1160	596
6	135	1,30	–	**SFP613SW**	10	1356	805	1200	562
8	40	0,30	–	**SFP803SW**	5,5	1163	830	1113	450
	135	1,30	–	**SFP813SW**	15	1356	805	1200	620

SFP Series



Reservoir Capacity:
20 - 40 - 150 litres

Split-Flow Outlets:
2, 4, 6 and 8 outlets

Flow at Rated Pressure:
0,27 - 2,10 l/min

Motor Size:
0,75 - 15 kW

Maximum Operating Pressure:
700 bar



Lifting Cylinders

For a complete line of Enerpac cylinders, see the Cylinder and Lifting Products in our catalogue.

Page: 5

① Manifold with split-flow outlets and CR400 couplers
② Adjustable pressure relief valve per circuit
③ Manual 4/3 control valves with joysticks
④ Solenoid 4/3 control valves (24 VDC)
⑤ Power socket
⑥ Oil sight gauge(s)
⑦ Remote control pendant with 5 m cord
⑧ Return flow control valve in each circuit
⑨ Hydraulic pressure gauge in each circuit

Motor Voltage

Motor voltage is specified by the last letter in the model number.

Other motor voltages are available from Enerpac. Change "**W**" in the model as follows for other options:
J = 460-480V, 3 ph, 50-60 Hz
G = 208-240V, 3 ph, 50-60 Hz

Tel: +45 63 12 83 00 | Email: ps@hymatik.com | www.hymatik.com | Hvidkaervej 27a, DK-5250 Odense SV, Denmark

SFP-Series, Split-Flow Pump Network Kits

ENERPAC

▼ SFP-Series Split-Flow Pump Kit Components



Connecting Split-Flow Pumps for more lift points and greater accuracy

- **Control multiple Split-Flow Pumps with one control unit**
- **Pumps can be closer to the lifting points, requiring shorter hoses and increasing accuracy**
- **Synchronize all lift points to within 1,0 mm (0.04 inch)**
- **Network control boxes expand the number of lifting points by combining up to four split-flow pumps together, simplifying lifting operations by using a single operator station**
- **Plug and play synchronous lift upgrade kits limit initial investment and provide everyday flexibility to tailor the controls to the applications needs.**

Split-Flow Pumps Kits

SFP-Series kits are customized from standard components to meet the needs of your unique applications. On the next page is the guide to help you choose the right components to upgrade or expand your equipment based on your application needs.

Contact your regional Enerpac representative / territory manager for support with your specific project.

Split-Flow Pump Network Kits

Split-Flow Pump Network Kits connect multiple Split-Flow Pumps under one control system.

Split-Flow Pump Synchro Kits

Split-Flow Pump Synchro Kits connect and electronically synchronize each lift point of a single Split-Flow Pump or multiple Split-Flow Pumps under one control system.



Junction Box

SFPKSS4 and **SFPKSS8** junction boxes consolidate the signals from pressure and stroke sensors, allowing the master control box to synchronize the lifting operation.



SFPKMN, Master Control Box

All SFP-Series Synchro Kits include a master control box to allow the operator to easily monitor and control a multi-point synchronized lift and adjust individual lift points as needed.
All master control boxes feature an industrial grade touch screen and a user-friendly interface.



EVO-SC, Stroke Sensor Cables

Can be connected together for additional length. Ordered separately, requires one for each stroke sensor.

Model Number	Length (m)	Model Number	Length (m)
EVO-SC-6	6	EVO-SC-25	25



EVO-WSS, Wire Stroke Sensors

Provides stroke feedback to controls. Includes magnets for mounting. Ordered separately, requires one sensor for each lifting point. Available in measuring range from 375 to 1000 mm.

Model Number	Range (mm)	Model Number	Range (mm)
EVO-WSS-375	375	EVO-WSS-1000	1000
EVO-WSS-500	500	–	–



Communication Cables

EVO-COMM-Series communication cables transfer information about the synchronized lift operation from the master control panel to each of the connected split-flow pumps.

Model Number	Length (m)	Model Number	Length (m)
EVO-COMM-25	25	EVO-COMM-75	75
EVO-COMM-50	50	EVO-COMM-100	100

Tel: +45 63 12 83 00 | Email: ps@hymatik.com | www.hymatik.com | Hvidkaervej 27a, DK-5250 Odense SV, Denmark

Split-Flow Pump Network Kits

Upgrading Split-Flow Pumps

To network multiple SFP-pumps together with standard function see drawing and table ①.

To upgrade a single SFP-pump to synchronous lift capability, see drawing and table ②.

To upgrade and network multiple SFP-pumps together with synchronous lift capabilities, see drawing and table ③.

SFP Series



Multiple Pumps in Network System:
1 - 4 pumps

Maximum Lifting Points:
32x cylinders

① Networked SFP-Pumps in Standard Operation

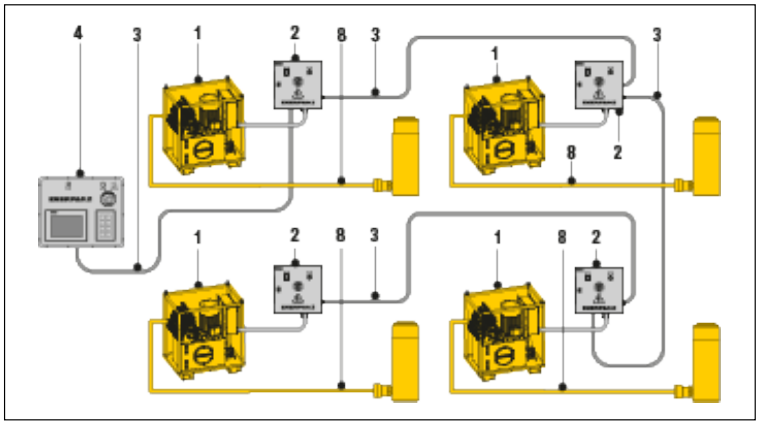

Nr.	Qty	Model Nr. & Description
1	4x	**SFP...SW** Pumps with solenoid valves
2	4x	**SFPKSN** Junction Box, 1x per pump
3	4x	**SFPCOMM-25** Communication Cable, 1x per pump
4	1x	**SFPKMN** Master Control Box
8		HC-700-Series, Hydraulic Hoses

② Single SFP-Pump in Multiple-Point Synchronous Lifting Operation

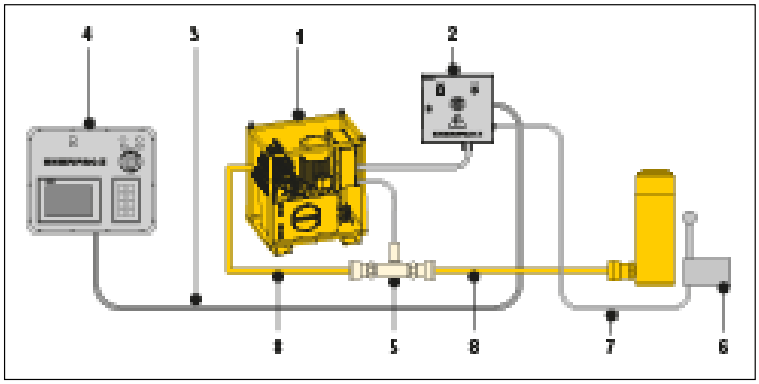

Nr.	Qty	Model Nr. & Description
1	1x	**SFP...SW** Pump with solenoid valves
2	1x	**SFPKSS4** Junction Box for 2-4 lifting points or **SFPKSS8** for 6-8 lifting points
3	1x	**SFPCOMM-25** Communication Cables
4	1x	**SFPSSC** Single Slave Control Box
5		**SFPKPT** Pressure Transducer Kit (1x per cylinder A-port)
6		**EVO-WSS-XXX** Stroke Sensor, 1x per cylinder
7		**EVO-SC-25** Stroke Sensor Cable, 1x per cylinder
8		HC-700-Series, Hydraulic Hoses

③ Networked SFP-Pumps in Multiple-Point Synchronous Lifting Operation

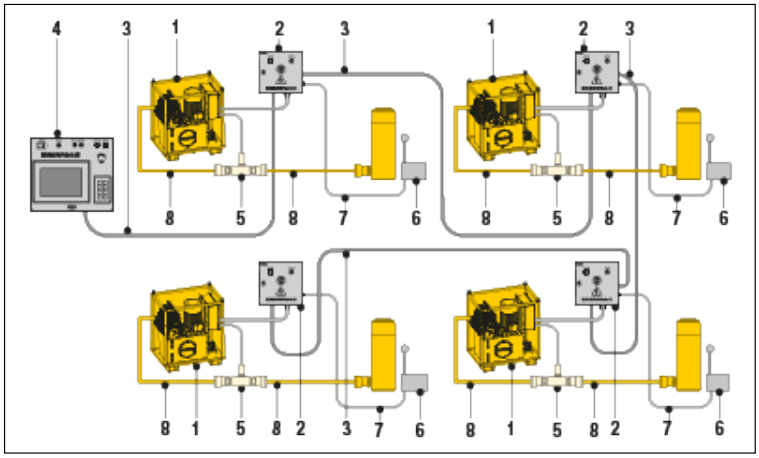

Nr.	Qty	Model Nr. & Description
1	4x	**SFP...SW** Pump with solenoid valves
2	4x	**SFPKSS4** Junction Box, 1x per pump, for 2-4 lifting points or **SFPKSS8** Junction Box for 6-8 lifting points)
3	4x	**EVO-COMM-XXX** Communication Cable, 1x per pump
4	1x	**EVOMASTER** Master Control Box
5		**SFPKPT** Pressure Transducer Kit, 1x per cylinder A-port)
6		**EVO-WSS-XXX** Stroke Sensor, 1x per cylinder
7		**EVO-SC-25** Stroke Sensor Cable, 1x per cylinder
8		HC-700-Series, Hydraulic Hoses

EVO-Series, Synchronous Lifting Systems

ENERPAC

▼ EVO 841460W



- **Modular lifting pumps to control 4, 8 or 12 lifting points**
- **Can be connected to single- or double-acting cylinders with the same or different lifting capacities**
- **PLC-controlled system with integrated 700 bar hydraulic power unit and 250 litres reservoir**
- **Network capability to link up to 4 EVO-units (HPUs) to a separate network controller via wireless control**
- **Intuitive user interface providing easy set up, control and navigation**
- **Data storage and recording capabilities**
- **Variable frequency drive motor (VFDM) and PLC for precise synchronization and oil flow control.**

The multi-functional synchronous lifting systems

EVO-System Work Modes

The application possibilities are infinite with the standard EVO-System, powering interlinked hydraulic cylinders – single or double-acting, push or pull, stage lift, hollow plunger or lock nut cylinders. The EVO-System has 9 work modes. The operator can navigate to any of these menus:

1. Manual
2. Pre-Load
3. Automatic
4. Retract Fast
5. Depressurize
6. Tilting
7. Stage Lift
8. Weighing *
9. Center of Gravity determination *

* Available in the **EVO-W-models**.

Typical Synchronous Lifting Applications

- Bridge lifting and repositioning
- Bridge launching
- Bridge maintenance
- Incremental launching and box jacking
- Lifting and lowering of heavy equipment
- Lifting, lowering, levelling and weighing of heavy structures and buildings
- Structural and pile testing
- Lifting and weighing of oil platforms
- Foundation levelling of onshore and offshore wind turbines
- De-propping/load transfer from temporary steel work
- Foundation shoring.



◀ *The superlifting and launch of a 43.000-ton floating oil production system in Malaysia for the Gumusut-Kakap offshore field has set high benchmarks for safety through its use of sophisticated EVO-Series synchronous hydraulics to lift, balance, weigh and smoothly launch massive resource structures.*

Synchronous Lifting Systems

Benefits of the EVO-Series System

Precise control of multiple lift points
- Comprehensive understanding and management of a lifting operation from a central control system improves safety and operational productivity.
- Programmable synchronized lifting.
- Automatic stop at pre-set cylinder stroke or load limit.

Safe and efficient movement of loads
- System secured with warning and stop features to realize optimal safety.

High accuracy
- Variable frequency drive (VDFM) and PLC for precise synchronization and control of oil flow, stroke and speed.
- Depending the cylinder capacities used, an accuracy of 1,0 mm between lifting points is achieved.

Ease of operation
- User friendly interface: visual screens, icons, symbols and color coding.
- A single operator controls the entire operation.

Monitoring and Data Recording
- Displays data of the operation.
- Data recording at user-defined intervals.
- Data storage and read-out for reporting.

Network capability
- Ethernet IP protocol for communication between hydraulic power units, allow easy “plug and play”.

EVO-W Weighing System
Weighing applications with 1% accuracy
- Includes calibrated sensors and auto-calibration of external load cells.
- Center of gravity determination functionality.
- Parameters for “waiting time for stabilization” and “number of cycles”.

Global standardized system
- Enerpac global coverage ensures local support.

EVO Series



Number of Lifting Points:
4 - 8 -12 (up to 48)

Reservoir Capacity:
250 litres

Flow at Rated Pressure:
0,75 - 4,80 l/min

Motor Size:
3,50 - 7,50 kW

Maximum Operating Pressure:
700 bar



Stroke Sensors and Cables

Optional accessories required for each lifting point and stroke sensor.

Page: 338



CLNC12 Network Controller

Required to link up to 4 standard EVO-pumps together to achieve a maximum of 48 lifting points. Contact Enerpac for more information.

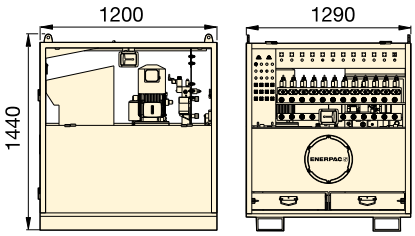

EVO-Series (Standard)

Lifting Points	Variable Oil Flow at 50 Hz [1] (l/min) (< 125 bar)	(> 125 bar)	Model Number [2] 380-415 V, 3ph, 50-60Hz	Usable Oil Capacity (litres)	Motor Size (kW)	Motor Speed [4]	(kg)
4	4,0 - 13,3	0,75 - 2,51	**EVO421380**	250	3,5	VFDM	910
4	4,0 - 13,3	0,75 - 2,51	**EVO421380 W** [3]	250	3,5	VFDM	910
4	4,7 - 15,6	1,44 - 4,80	**EVO440380**	250	7,5	VFDM	1005
4	4,7 - 15,6	1,44 - 4,80	**EVO440380 W** [3]	250	7,5	VFDM	1005
8	4,0 - 13,3	0,75 - 2,51	**EVO821380**	250	3,5	VFDM	910
8	4,0 - 13,3	0,75 - 2,51	**EVO821380 W** [3]	250	3,5	VFDM	910
8	4,7 - 15,6	1,44 - 4,80	**EVO840380**	250	7,5	VFDM	910
8	4,7 - 15,6	1,44 - 4,80	**EVO840380 W** [3]	250	7,5	VFDM	910
12	4,0 - 13,3	0,75 - 2,51	**EVO1221380**	250	3,5	VFDM	920
12	4,0 - 13,3	0,75 - 2,51	**EVO1221380 W** [3]	250	3,5	VFDM	920
12	4,7 - 15,6	1,44 - 4,80	**EVO1240380**	250	7,5	VFDM	1025
12	4,7 - 15,6	1,44 - 4,80	**EVO1240380 W** [3]	250	7,5	VFDM	1025

[1] Oil flow will be approximately 6/5 of these values at 60 Hz.
[2] For 460-480 VAC, 3 phase, 50-60 Hz change 380 in model number into 460. Example **EVO421460.**
[3] Model numbers with suffix **W** are pumps for weighing systems. [4] VFDM = Variable Frequency Drive 15-50 Hz.

▼ *Precision levelling caisson pier box: 3 EVO-Systems connected with 32 jacks lowered the 1100 ton bascule pier box.*



SCJ-Series, Self-Locking Cube Jack

ENERPAC

▼ SCJ50, Enerpac Self-Locking Cube Jack



Incremental lifting system with automated mechanical locking

- **System is automatically mechanically locked after the lifting or lowering stroke**
- **Self-aligning steel cribbing blocks save time, improve side load, and eliminate the need for wooden cribbing materials**
- **Jobs are completed more efficiently due to simplified operation sequence with 50% less cycles than climbing jacks**
- **End block with adjustable swivel saddle allows fine adjustment during set-up: 50 mm screw extension**
- **Can be operated with Enerpac's 700 bar hydraulic power units**
- **Lloyds witness tested to 125% of maximum working load.**

Why use Self-Locking Cube Jacks?

The Self-Locking Cube Jack is a safer, more efficient alternative to the jack-and-pack method with wooden cribbing. The Self-Locking Cube Jack is derived from the proven Enerpac Jack-up System.

The Cube Jack has a small footprint and is useable in confined spaces, providing heavy lift contractors with a stable lift up to 3 metres. The cribbing blocks are lightweight and can be handled manualy.

Markets & Applications

Applications with a minimum starting height of 494 or 558 mm and requirement to lift up to 2067 or 3006 mm.

- Power Generation - transformer jacking
- Mining - equipment maintenance
- Heavy Transport - vehicle unloading
- Oil & Gas - module jacking
- Construction - bridge jacking
- Industrial Movers - lifting, lowering and levelling of heavy equipment.



◀ *Completed in just over one hour, the 160 ton 50 x 7 meters steel racking system was lifted synchronously to a height of 2,2 meters using 16 Enerpac SCJ50 Cube Jacks powered by a single SFP-Series Split-Flow Pump. Lifting large racking systems can be hazardous, complex and difficult involving forklift trucks and chain blocks. Photo by courtesy of PHL Hydraulics Ireland Ltd.*

▼ *Forklift tabs on Cube Jacks for easy transportation and positioning with a pallet truck. See dimensions D and I to select the right pallet truck size.*



Self-Locking Cube Jack

Self-Locking Cube Jack

Easy-to-use, compact and portable jacking system that utilizes base lifting frames and self-aligning, lightweight steel cribbing blocks, instead of wooden cribbing materials.

Operation is simple:

1. Connect the Cube Jacks to the Enerpac Split-Flow Pump and select lifting mode on each base lifting frame.
2. Insert a cribbing block and actuate the Cube Jack until the cribbing block engages the lock mechanism.
3. Retract the jack and repeat the process until the desired lifting height is reached. For the lowering operation select lowering mode on each base lifting frame and reverse the process.

The Cube Jack End Block is equipped with an adjustable saddle for initial alignment with the load.

All controls except for the main directional valve, which is on the hydraulic power unit, are included on the Cube Jack.

Manual cribbing block insertion

Cribbing blocks are easily managed by hand and the Cube Jack includes integrated fork pockets and lifting rings for effortless positioning.

Synchronous Lifting & Lowering

Enerpac recommends using the SFP-Series Split-Flow Pumps with multiple outlets with equal oil flow. For lifting and lowering applications on multiple points, Split-Flow Pumps are a far better alternative than using separately operated pumps.

If synchronous lifting & lowering is required, the SFP-Series Pumps can be configured to accommodate stroke sensors and provide accurate computer controlled lifting function.

SCJ Series



Capacity Per Cube Jack:
500 - 1000 kN

Maximum Lifting Height:
2067 - 3006 mm

Maximum Operating Pressure:
700 bar

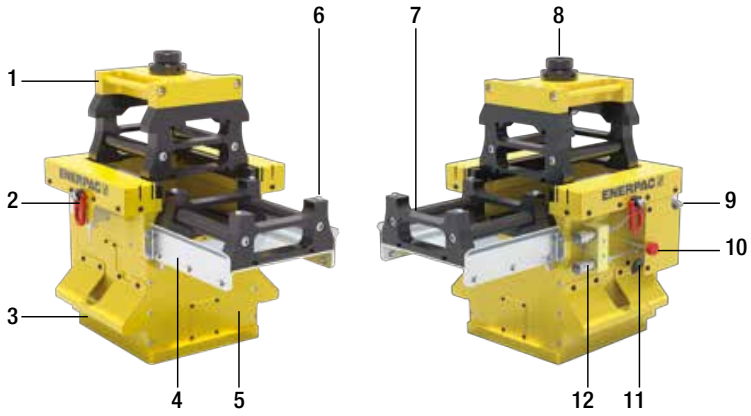

Self-Locking Cube Jack

1	End block with tilting saddle
2	Eye-bolts for hoisting
3	Forklift tabs
4	Removable insert table
5	Cube Jack base frame
6	Locating pins
7	Steel cribbing blocks
8	Adjustable tilting saddle
9	Flow control
10	Mode locking pin
11	Mode selector lever
12	Hydraulic connections (Advance / Retract)

▼ *Cube Jack close-up of lifting and lowering valving mode and lock handle.*



▼ *Optional wire stroke sensor can provide stroke feedback to pump control.*



SCJ-Series, Self-Locking Cube Jack

ENERPAC

▼ SCJ100, Enerpac Self-Locking Cube Jack



Incremental lifting system with automated mechanical locking

Included with the Cube Jack are:

- **– Cube Jack Basic Unit**
- **– End Block with adjustable swivel saddle**
- **– Multiple cribbing blocks: 11x on SCJ50**
  18x on SCJ100
- **– Transportation Frame**

- **Cribbing blocks can be manually inserted into the Cube Jack by one person.**



Transport Frame

Provided with purchase of each Cube Jack. Provides storage and transport for base unit, end block, and all included cribbing blocks.



Lightweight Cribbing Blocks

Provided with purchase of each Cube Jack. Cribbing blocks can be manually inserted into the Cube Jack by one person. Spare cribbing blocks can be ordered separately.

Description	Model Nr.
1x Cribbing Block, 50 ton	**SCJ5B**
1x Cribbing Block, 100 ton	**SCJ10B**



Split-Flow Pumps

Enerpac recommend to use the **SFP-Series Pumps** with multiple outlets with equal oil flow.
For lifting and lowering applications on multiple points, Split-Flow Pumps are a far better alternative than using separately operated pumps.

Page: 336



◀ *Heat exchanger maintenance job on the piping and condensers at a refinery using a combination of Enerpac Heavy Lifting Technology: SCJ-Series Cube Jacks, the ETT-Series Hydraulic Turntable and LH-Series Low-Height Skidding Systems.*

Self-Locking Cube Jacks

Lifting Capacity per Base Unit ton (kN)	Lifting Stroke (mm)	Model Number	Maximum Sideload at full extension	Maximum Pump Oil Flow Rate (l/min)	Oil Capacity per Base Unit (cm^3) Advance	Retract
50 (500)	156	**SCJ50**	1,5%	0,9	1229	623
100 (1000)	156	**SCJ100**	1,5%	1,8	2500	1400

Self-Locking Cube Jack and Accessories

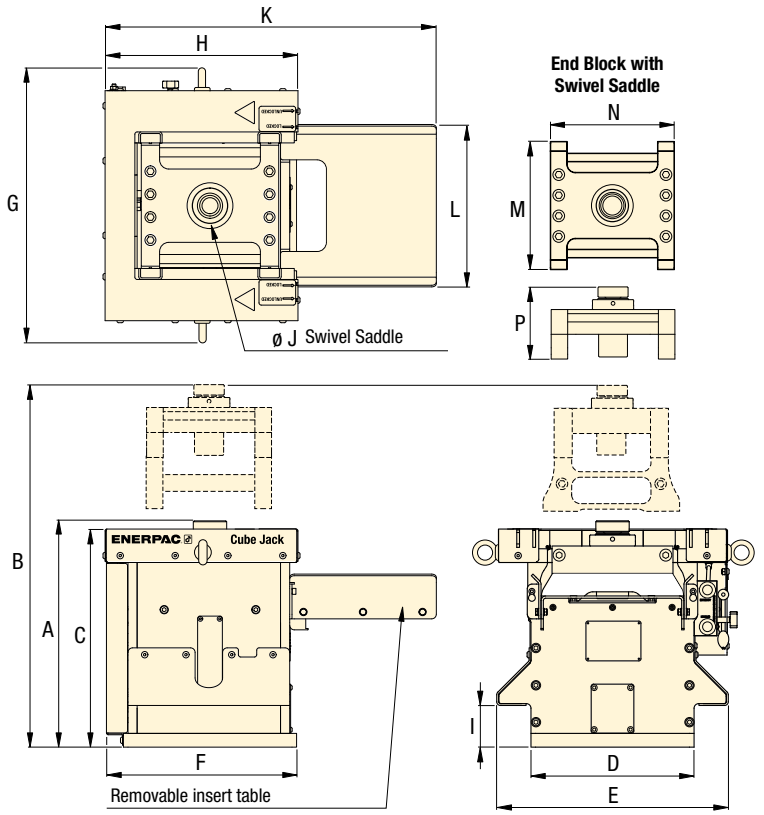

Basic Unit

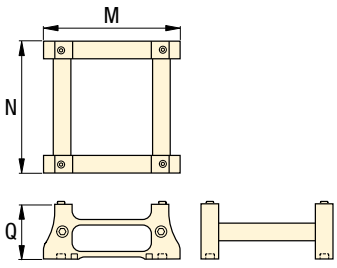

Cribbing Block

SCJ Series



Capacity Per Cube Jack:
500 - 1000 kN

Maximum Lifting Height:
2067 - 3006 mm

Maximum Operating Pressure:
700 bar

▼ *Typical set-up with 4 Self-Locking Cube Jacks and cribbing blocks in a Factory Acceptance Test (FAT). Enerpac recommends to power the Cube Jack using SFP-Series Split-Flow Pump.*



Base Unit		End Block		Cribbing Block		Transport Frame *	
Model Number	(kg)	Model Number	(kg)	Model Number	(kg)	Model Number	(kg)
SCJ50	360	SCJ5EB	40	SCJ5B	16	SCJ5F	110
SCJ100	820	SCJ10EB	100	SCJ10B	23,5	SCJ10F	250

Dimensions (mm)																Model Number
A	B	C	D	E	F	G	H	I	J	K	L	M	N	P Min.	P Max.	Q	
494	2067	476	356	505	443	556	428	91	125	726	351	300	310	175	225	125	SCJ50
558	3006	526	506	655	636	772	598	101	170	1046	504	450	460	189	239	125	SCJ100

* Dimensions Transport Frame L x W x H: **SCF5F**: 920 x 850 x 860 mm
SCF10F: 1600 x 1200 x 1500 mm

BLS-Series, Climbing Jacks

ENERPAC

▼ BLS1006



A Simple Solution to Incremental Lifting

Lifting Height

Climbing Jacks overcome the usual limitation of lifting height imposed by the cylinder's plunger stroke length. Large objects, such as oil tanks, can be lifted, held and lowered for maintenance without sending for a crane.



Split-Flow Pumps

SFP-Series Pumps with multiple outlets with equal oil flow. For lifting and lowering applications on multiple points Split-Flow Pumps are a far better alternative than using separately operated pumps.

Page: 336



Synchronous Lifting System

The standard EVO-Series System is ideal for stage lifting, powering interlinked hydraulic cylinders. The EVO-system has 9 work modes including the stage lift work mode.

Page: 340



Jack-Up Systems

For incremental lifting with higher lifting capacities and up to 20 m lifting height, see our JS-Series Jack-Up Systems.

Page: 348

- **Climbing jacks include integral tilt saddles with maximum tilt angles up to 5 degree**
- **Large base plate with anti-rotation rod for stability and safety**
- **Built-in safety valve prevents accidental over-pressurization**
- **Ideal in combination with the stage lift work mode of the EVO-Series synchronous lifting system**
- **Baked enamel finish for increased corrosion resistance**
- **CR400 couplers included on all models.**

▼ *Synchronous Stage Lifting: 48 double-acting jacks (25 and 50 ton) are networked in to a 16 points synchronous system to lift this 50 metres long, 1000 ton building up to a height of 2,5 metres to construct a new floor level.*



Cylinder Capacity ton	Stroke (mm)	Model Number	Max. Cylinder Capacity (kN) Push	Pull
50	150	**BLS506**	498	103
95	161	**BLS1006**	933	435
140	151	**BLS1506**	1386	668
200	151	**BLS2006**	1995	1017

Tel: +45 63 12 83 00 | Email: ps@hymatik.com | www.hymatik.com | Hvidkaervej 27a, DK-5250 Odense SV, Denmark

Double-Acting Climbing Jacks



◀ *Typical stage-lift application using a custom built Enerpac system to lift the 360 ton Akkerwinde wooden bridge in the Netherlands.*

BLS Series



Capacity per Lifting Point:
50 - 200 ton

Stroke per Stage:
150 - 161 mm

Maximum Operating Pressure:
700 bar

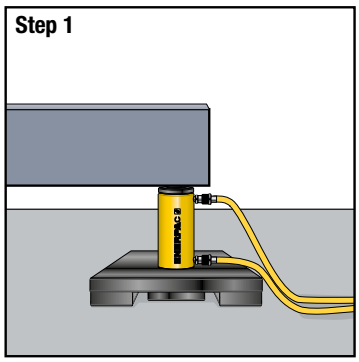

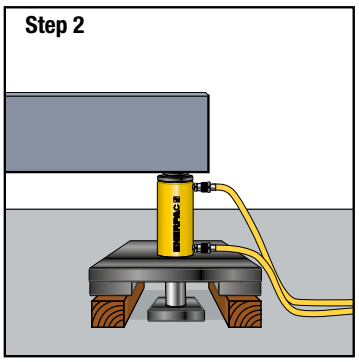

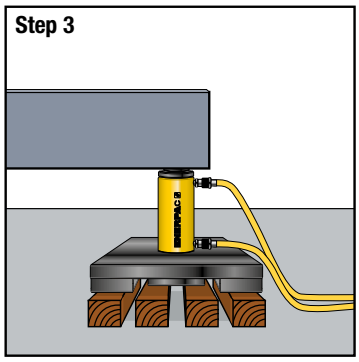

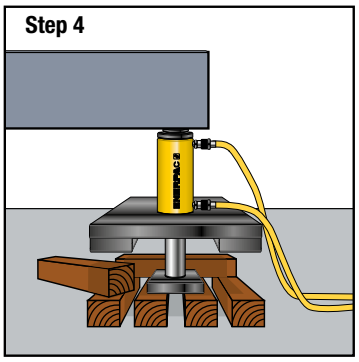

▲ **Stage Lifting Sequence**

Step 1: The climbing jack is placed on a solid support under the load (retracted plunger).

Step 2: Plunger extends, lifting the load and giving clearance to insert two outer blocks under the spreading plate.

Step 3: Plunger retracts, giving clearance to position the central blocks which will support the plunger plate for the next extension.

Step 4: Plunger extends, lifting the load, giving clearance to insert two new blocks, placed crosswise under the spreading plate.

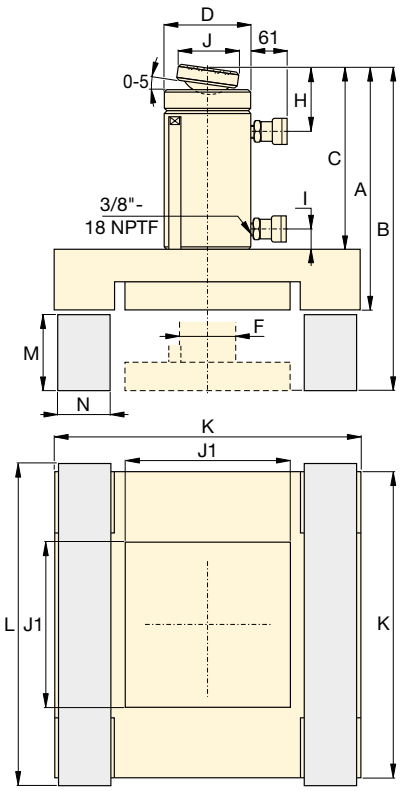

Cylinder Effective Area (cm^2)		Oil Capacity (cm^3)		Dimensions (mm)										Cribbing Blocks * and Dimensions (mm)					Model Number
Push	Pull	Push	Pull	A	B	C	D	F	H	I	J	J1	K	Material	L	M	N	(kg)	
71,2	21,5	1111	335	406	556	318	127	79	56	36	50	240	515	Azobe Wood	565	140	120	170	**BLS506**
133,3	62,2	2238	1045	445	606	343	177	95	76	24	71	330	670		720	150	160	315	**BLS1006**
198,1	95,4	3090	1488	472	624	370	203	114	94	39	130	230	475	Solid Aluminium or Steel	500	140	115	322	**BLS1506**
285,6	145,6	4332	2209	510	661	387	248	133	102	37	130	270	550		575	140	135	373	**BLS2006**

* Cribbing blocks are not supplied by Enerpac.

JS-Series, Jack-Up Systems

ENERPAC

▼ **JS250 and JS500 Enerpac Jack-Up System** (one lifting tower shown)



Incremental Lifting System – Synchronously Lift and Mechanically Hold

- **Self-contained hydraulics in each jack-up unit for uncluttered work area**
- **Synchronously lift loads with multiple jack-up units. The most common system set-up includes 4 jack-up units**
- **Adjustable top barrel is standard on all models**
- **Lifting barrels are stacked together to mechanically hold the load**
- **Up to 4% side load capacity depending on lifting height**
- **Computer controls for operating the jack-up system with automatic and manual lifting settings.**

Typical Applications

- Bridge maintenance
- Lifting and lowering of heavy equipment
- Lifting, lowering and levelling of heavy structures and buildings
- De-propping/load transfer from temporary steel work.

Computer Controls

Enerpac Jack-up Systems provide precision control suitable for many demanding lifting/lowering applications. The comprehensive self-contained design features simple to use software.

- Automatic synchronization of multiple networked lift points.
- Overload and stroke alarms
- Emergency stop switch at jack-up units and controls.

▼ *Enerpac has been awarded a contract by Burkhalter to extend the height of Enerpac's 2000 ton (500 ton per tower) jack-up system from 20m to 36m for future projects.*



▼ *Enerpac Jack-Up System lifts 1500 ton span on Fore River Bridge.*



▼ *Undecking an 1500 ton Electric Rope Shovel in a Copper Mine with a JS500 Jack-Up System for bearing inspection and maintenance.*



Enerpac Jack-Up Systems

Enerpac Jack-Up Systems

The jack up-system is a custom developed multi-point lifting system. A typical system setup includes four jack-up units positioned under each corner of a load.

Example: A four unit setup with JS250 has a lifting capacity of 1000 ton (250 ton per unit). The lifting frame of a jack-up unit contains four hydraulic lifting cylinders, one in each corner, which lift the load using the stacked steel barrels.

A load is lifted in increments as barrels are slid into the system, lifted, and stacked; forming 'lifting towers'. A jack-up system is operated and controlled by a computer control unit.

Each unit's lifting and lowering operations occur simultaneously; the computer control unit's synchronous technology maintains the balance of the load.

JS Series



Capacity Per Lifting Tower:
250 - 500 ton

Lifting Height:
10 - 15 metres

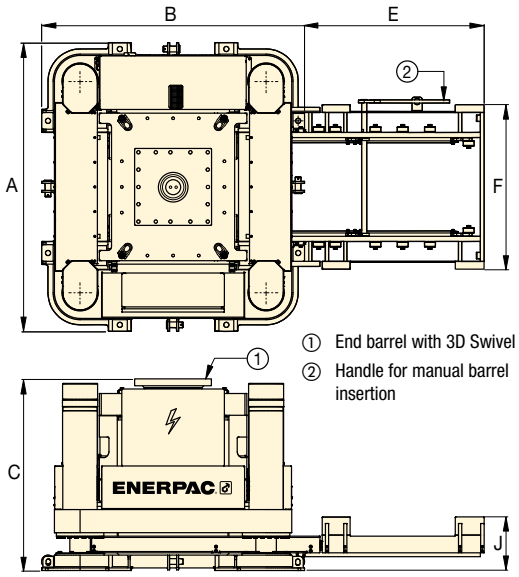

Jack-Up System (JS)

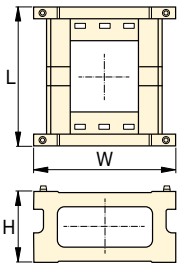

Steel Barrel (BLJS)

Jack-up System Smart Box

The **Smart Box SBSJ-SCCV4** is Enerpac's proprietary control platform. It allows an operator to control up to 8 jack-up towers simultaneously with one **SBLT1** standard laptop.

- Single operator control from a central location provides safe and reliable operation
- Synchronous lift /lower and load control between the lifting positions
- Automatic lifting and lowering cycles
- Displays individual and accumulative stroke/load
- Simple graphical user interface.



Adjustable Top Barrel

Adjustable top barrel is standard on all models.
Includes double-acting lock nut cylinder with swivel saddle.
Cylinder can be extended to contact the load.
Provides ability to adjust starting height of each leg, ensuring safe and stable lifting.
Must be operated with separate 700 bar pump with 4/3 directional valve.

Steel Barrels

For use with Jack-Up System	Barrel Set Model Number	Number of Barrels per Set	Barrel Dimensions (mm)			Weight per Barrel
			L	W	H	(kg)
JS250	**BLJS250**	4	1150	1150	500	360
JS500	**BLJS500**	4	1700	1700	700	950

Jack-Up Systems

Capacity per Tower	Model Number	Maximum Sideload	Maximum Lifting Speed	Base Frame Dimensions (mm)			Barrel Loading System (mm)			Electric Power Pack	Weight per Jack-Up Unit *	Weight Adjustable Top Barrel (3D Swivel)
ton (kN)			(m/hr)	A	B	C	E	F	J	(kW)	(kg)	(kg)
250 (2500)	**JS250**	3% @ 10m	4	2250	2050	1475	1400	1341	418	15	7500	2880
500 (5000)	**JS500**	4% @ 15m	4	2800	2300	1700	1980	1771	458	30	13.750	3850

* Weight per jack-up tower, excluding adjustable top barrel.

HSL-Series, Heavy Lifting Strand Jacks

ENERPAC

▼ Shown: **HSL50006 Strand Jack**



High Capacity Precision Control

- **Precision control of synchronous lifting and lowering**
- **Can be controlled by a single operator from a central location for increased safety**
- **Automated locking - unlocking operation**
- **Two strand sizes: 15,7 mm and 18 mm (0.62 and 0.71 inch)**
- **Telescopic strand guide pipes prevent bird caging**
- **Internal components are coated with Lunac, an anti-corrosion coating, making it suitable for marine environments**
- **Lifting anchor included with all strand jacks**
- **Lloyd's witness tested to 125% of maximum working load.**

Heavy Lifting Strand Jacks

Enerpac strand jacks are the strand jacks of choice for customers seeking precise synchronous control with heavy-lifting capacity in an economical, compact, and reliable foot print.

Enerpac strand jacks are powered by electrical or diesel driven hydraulic power packs and controlled by Enerpac's proprietary SCC-Smart Cylinder Control System to ensure full control of lifting and lowering operations.

Enerpac continually improves reliability, durability, and safety of their strand jacks, making them an industry standard for heavy lifting.

▼ *HSL85007 Strand Jack System used on Enerpac custom Self Erecting Tower.*



▼ *Enerpac's SCC-Smart Cylinder Control System simplifies synchronous operation with intuitive controls and a user-friendly graphical interface.*



Heavy Lifting Strand Jacks

Strand Jacks

A strand jack can be considered a linear winch. In a strand jack, a bundle of steel strands are guided through a main “lifting” jack.

Above and below the cylinder are anchor systems with wedges that grip the strand bundle simultaneously. Lifting and lowering a load is achieved by hydraulically controlling the main jack and both mini jacks alternately.

In the case of system pressure loss, the wedges are mechanically closed automatically, holding the suspended load in place.

Today strand jacks are widely recognized as the most sophisticated heavy lifting solution. They are used all over the world to erect bridges, load out offshore structures, and lift/lower heavy loads where the use of conventional cranes is neither economical nor practical.

HSL Series



Capacity:
15 - 1250 ton

Stroke:
250 - 600 mm

Maximum Operating Pressure:
350 bar

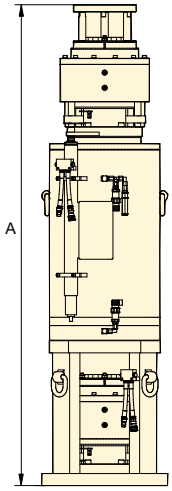

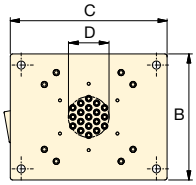

① Strand Guide
② Top Mini Jack
③ Main Lifting Jack
④ Counter Balance Valve
⑤ Bottom Mini Jack
⑥ Chair

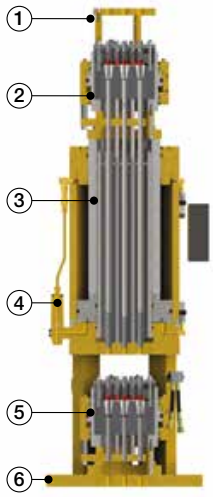

Strand Diameter mm (inch)	Capacity * ton	(kN)	Model Number	Number of Strands	Stroke (mm)	Dimensions (mm) A	B	C	D	(kg)
15,7 (.62)	**30**	(300)	**HSL3006**	3	480	1851	350	500	59	500
	70	(700)	**HSL7006**	7	480	1915	360	575	93	640
	200	(2000)	**HSL20006**	19	480	1992	522	650	169	1300
	300	(3000)	**HSL30006**	31	480	2046	673	673	216	2180
	500	(5000)	**HSL50006**	48	480	2136	733	733	273	3150
18 (.71)	**15**	(150)	**HSL1507**	1	250	1242	220	220	20	100
	45	(450)	**HSL4507**	3	480	1728	350	500	73	500
	60	(600)	**HSL6007**	4	480	1752	400	625	88	650
	100	(1000)	**HSL10007**	7	480	1926	408	625	116	850
	200	(2000)	**HSL20007**	12	480	2001	522	650	165	1400
	300	(3000)	**HSL30007**	19	480	2055	673	673	210	2180
	450	(4500)	**HSL45007**	31	480	2223	733	733	272	3050
	650	(6500)	**HSL65007**	43	480	2237	850	850	351	3950
	850	(8500)	**HSL85007**	55	480	2402	900	900	364	5000
	1000	(10.000)	**HSL100007**	66	480	2558	1092	1092	436	7650
	1250	(12.500)	**HSL125007**	84	600	2658	1100	1100	458	8300

* Capacity is based on 2,5 minimum safety factor over strand breaking load.

▼ Strand Jack Accessories

Contact Enerpac for assistance at **enerpac.com/contact-us**



SLPP-Series Hydraulic Power Packs

Enerpac offers a comprehensive range of hydraulic power packs that are optimized for use with their industry leading heavy lifting strand jacks.



SG-Series Strand Guides

Provides a guide for the strand as a strand jack lifts the load.



SR-Series Strand Recoilers

Passively pays in or pays out strands while jacking and lowering.



SD1 Strand Dispenser

Essential to safely unbundle a new strand coil.



Lifting Anchor

Each Strand Jack includes a lifting anchor for attaching strand to the load.

SHC, SHP-Series, SyncHoist Load Positioning

ENERPAC

▼ SyncHoist System with SHC5540S Cylinders and SHP-Series Pump



- **High precision load manoeuvering, vertically and horizontally – using one crane**
- **Reduces the risk of damage from oscillations of wire rope due to crane jogging and sudden starts/stops**
- **Vastly improving worker safety, operating speed and control**
- **Weather conditions play less critical role**
- **PLC-controlled hydraulics turn lifting into high accuracy hoisting and load positioning system**
- **Double-acting push/pull cylinders with load holding valves for added safety in case of hose rupture or coupler damage**
- **Cost reduction compared to conventional load positioning methods.**

Options for system management & control:

- **Manual control with load and position monitoring for up to four cylinders as standard**
- **Automatic control available with addition of SFPSSC control panel provides automatic movements as well as stroke and load warning functions.**

Accurate Hoisting and Load Positioning Enhancing a Crane's Capability

Synchronous Hoisting

Enerpac SyncHoist is a unique crane product for below-the-hook positioning of heavy loads that require precision placement. The SyncHoist system may reduce the number of cranes needed and reduce the costs of multiple picks.

Functions

- High precision horizontal and vertical load positioning
- Load and position monitoring standard on all units to ensure safe and accurate operation.

Applications

- Positioning of rotor, stator and propeller blades of wind turbines
- Positioning of roof sections, concrete elements, steel structures
- Positioning of turbines, transformers, fuel rods
- Precise machinery loading, mill rod changes, bearing changes
- Precise positioning of pipe lines, blow out valves
- Positioning and aligning of ship segments prior to assembly.

▼ *Bridge segments are hoisted from the ground, being positioned with a 4-point SyncHoist system with fully monitorized cylinders.*



▼ *Rigging engineers used the SyncHoist system to precisely monitor and adjust each lifting point independently, or together in a synchronized manner to position the 1140 ton nuclear plant module.*



▼ *Enerpac SyncHoist system in use during roof truss picks: precise lift and positioning of stadium retractable roof trusses. 33 trusses weighing between 450 - 750 ton.*



SyncHoist - High Precision Load Positioning

What is SyncHoist?

Enerpac SyncHoist is a hydraulically operated auxiliary attachment for high precision load positioning for cranes.

The automatic version with PLC-controlled hydraulic pump monitors and guides the powerful double-acting push-pull cylinders integrated into the lifting points above the load. The SyncHoist system can be used for positioning, tilting and aligning of loads.

- Patented system
- European lifting directive and safety requirements as well as ASME BTH-1 standard for below the hook lifting devices.

SyncHoist improves safety, operating speed and control of load movement

Geometric positioning of heavy loads in a horizontal and vertical plane are frequently done using more than one crane.

Synchronising movements between cranes are difficult and risky. The lifting inaccuracy can result in damage to the load and support structures and puts workers at risks. The SyncHoist system can be used for controlled hydraulic horizontal and vertical material handling.

SHC-Series Cylinders

Standard stroke lengths and capacities shown serve most common applications. Contact Enerpac for custom stroke lengths and additional capacities to suit your specific application.

SHP-Series Manual Control

- Push button pendant control of up to four cylinders
- Load and position readout from sensors on SHC-series cylinders
- Visual check oil level, filter indicator.

Automatic Control Available

- Connect control panel **SFPSSC** to SHP-Series pumps to enable automatic control
- PLC-control and touch screen
- Pre-programmable motions and data recording
- System warnings for:
  – maximum cylinder load control setting
  – stroke and position control
  – thermal motor protection.

SHC, SHP Series



Capacity Per Lifting Point:
55 - 85 - 110 ton

Maximum Stroke:
1000 - 1500 mm

Accuracy Over Full Stroke:
± 1,0 mm

Maximum Operating Pressure:
700 bar

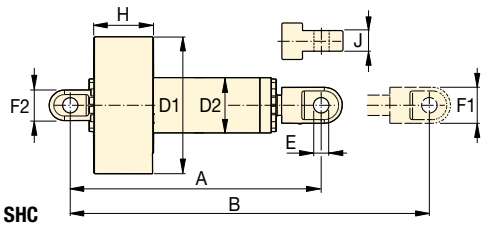

SHC

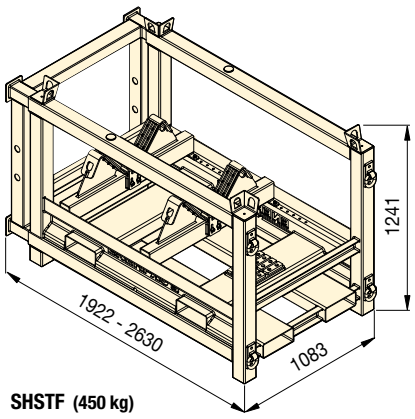

SHSTF (450 kg)

Cylinder Capacity ton (kN)	Cylinder Stroke (mm)	Cylinder Model Number *	Dimensions (mm) A	B	D1	D2	E	F1	F2	H	J	(kg)
55 (550)	1000	**SHC5540S**	1800	2800	690	245	59	160	160	395	80	624
85 (850)	1000	**SHC8540S**	1830	2830	680	265	72	164	164	385	100	700
110 (1100)	1500	**SHC11060S**	2355	3855	780	315	85	205	174	405	124	1235

* Each cylinder requires separate purchase of (1) **EVO-SC-25** sensor cable (25 m length) and (2) **SHH25** hydraulic hoses (25 m length) for connection to SHP-series pumps.
All SHC-cylinders supplied with adjustable steel transport frame (model nr. **SHSTF**) to protect your investment.

Maximum Lifting Points	Reservoir Size (litres)	Pump Model Number	Oil Flow per Outlet (l/min)	Motor Size 400V, 3 ph, 50 Hz (kW)	Dimensions (mm) A	B	C	D	(kg)
4	250	**SHP414SW**	1,40	7,5	1368	805	1250	760	780
4	250	**SHP421SW**	2,10	10	1368	805	1250	760	780

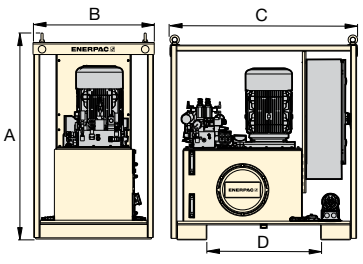

ML-Series, Mini-Lift Hydraulic Gantry

ENERPAC

▼ One leg of ML40 Mini-Lift Hydraulic Gantry



Lift Heavy Machinery Safely

Portable design with precision control

- Compact design for use in areas with limited space
- Self-contained hydraulics with synchronized lifting for enhanced safety
- Powered travel, under load, standard on all models for ultimate utilization
- Three-stage, double-acting cylinder provides extended lifting capacity
- Easy-to-use handheld pendant control can operate four legs simultaneously
- Compatible with standard Enerpac gantry accessories
- Operates on 115, 230 VAC 1-phase or 380-415 VAC 3-phase power (1 circuit per leg)
- ASME B30.1 compliant and load tested under witness of Lloyd's Register.



Header Beams

Sold in pairs and includes lifting points and fork pockets for easy positioning on gantry towers.

Description	Model Number
6 metres length	HBH6
8 metres length	HBH8



Skid Tracks

Skid tracks used for leveling and load distribution to reduce ground bearing pressure. Available in two standard lengths.

Description	Model Number
3 metres length	GST100-3
6 metres length	GST100-6



Lifting Anchors

Designed to transfer the load to the top of the header beam. Can accommodate a 250-ton shackle or attach directly to the lifted load.

▼ *SL400 gantry used to offload and install new forming press.*



▼ *SBL1100 gantry offloading a large generator for installation in a power plant.*





Higher Capacities SL and SBL-Series Hydraulic Gantries

When the ML-Series Mini Gantry isn't quite enough capacity or height for your application, Enerpac offers a full range of safe-to-operate full featured telescopic hydraulic gantries, up to 10.484 kN capacity and lifting heights up to 12 metres. Contact Enerpac for more details.

Page: 356

Mini-Lift Hydraulic Gantry

ML-Series, Mini-Lift Gantry

The cost-effective, compact ML40 Mini-Lift Hydraulic Gantry System, with wireless controls offers several key features:

Safety:
Stroke synchronization ensures a level lift regardless of load distribution.
PLC-controlled lifting using feedback from a stroke encoder maintains even height on all legs and will stop the lift if necessary to prevent issues.

Capacity:
400 kN lifting capacity at full extended lift height. Even with its compact size, the ML40 can lift full capacity to full height of 5,5 metres (18 ft), making it the most versatile portable gantry in the market.

Compact:
Fits through standard doorway and is easily moved and set up. The ML40 gantry can be moved through the tightest spaces imaginable in all industrial settings. Easy to push, pull and maneuver, the ML40 can get into spaces that no other gantry can.

ML Series



Capacity (with 4 legs):
400 kN

Maximum Lifting Height:
5,5 metres



Wireless Pendant

- Stroke measurement and closed loop synchronization ensure level lifting and lowering
- Integrated 1.8 inch color display provides load and stroke information for all four lift points.



Mini-Lift Gantry Transport Frame

Galvanized steel transport frames to allow shipment of mini gantry legs via standard truck lines. Two legs mount on each frame which includes storage for controls and accessories.

Description	Model Number
Set of two frames	ML40TF

Operating Voltages

ML40 is available in three voltages. 1 circuit per leg.

Voltage	Model Number
115 V, 1 phase, 16 A	ML40B
208-240 V, 1 phase, 8 A	ML40E
380-415 V, 3 phase, 2 A	ML40W

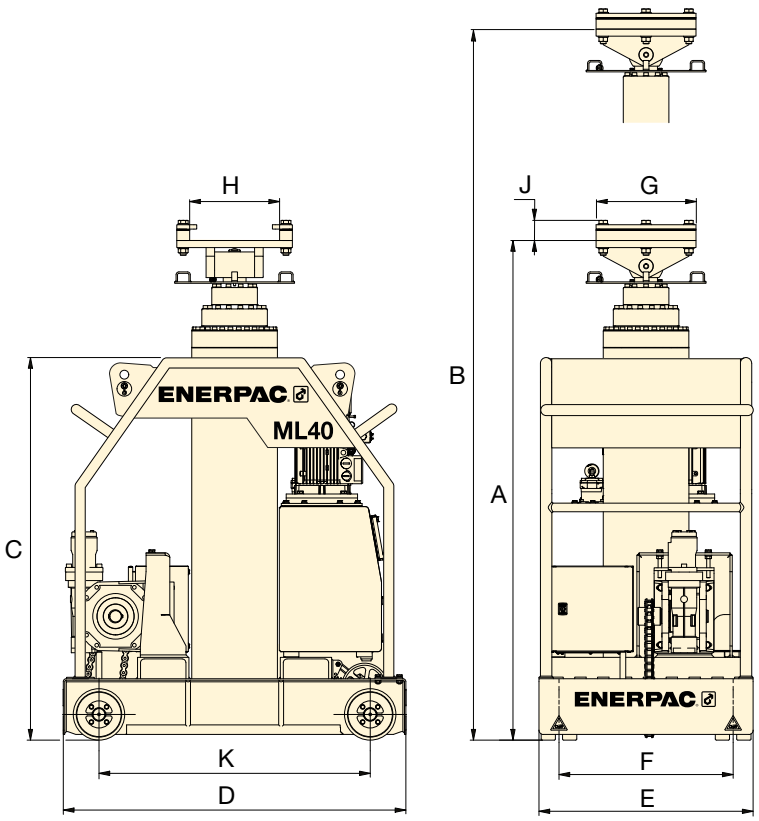

Max. Capacity * (kN)	Model Number (4 legs)	Retracted Height A (mm)	Stage 1 Max. Height B (mm)	Stage 1 Max. Capacity * (kN)	Stage 2 Max. Height B (mm)	Stage 2 Max. Capacity * (kN)	Stage 3 Max. Height B (mm)	Stage 3 Max. Capacity * (kN)	Base Height C (mm)	Base Length D (mm)	Base Width E (mm)	Track Gauge F (mm)	Beam Plate Length G (mm)	Beam Plate Width H (mm)	Beam Plate Height J (mm)	Wheel Base K (mm)	** (kg)
400	**ML40**	1900	3000	400	4200	400	5500	400	1390	1200	750	610	350	315	71	950	1350

* Capacity with 4 legs.

** Weight per leg including oil.

SL, SBL-Series, Telescopic Hydraulic Gantries ENERPAC

▼ SBL1100 with optional skid tracks, header beams, powered side shifts and lifting anchors



- **Self-contained hydraulics and electronics**
- **Intelli-Lift wireless control system**
- **Self-propelled wheels or tank rollers**
- **Foldable boom on SBL600, SBL900 and SBL1100 to enable easy transport and set-up**
- **Full range of supplementary equipment: header beams, lifting anchors, side shifts and skid tracks**
- **All gantries comply to ASME B30.1, CE, UKCA and other safety standards**
- **Lloyds witness tested to 125% of maximum working load.**

Precision Lift and Position of Heavy Loads

The Ultimate in Safety and Control



Intelli-Lift Wireless Control

The Intelli-Lift wireless control system is included with all Enerpac hydraulic gantries.

The Intelli-Lift controller offers superior safety and control and includes the following features:

- Encrypted bi-directional communication that eliminates interference from other devices
- Remote operation using multi channel wireless (2.4 GHz) or wired (RS-485) control
- High and low speed settings
- Automatic synchronization of lifting with an accuracy of 24 mm (0.95 inch)
- Automatic synchronization of travelling with an accuracy of 15 mm (0.60 inch)
- Overload and stroke alarms
- Remote side shift control
- Emergency stop switch.



ML40, Mini-Lift Hydraulic Gantry

400 kN lifting capacity at full extended lift height. Even with its compact size, the ML40 can lift full capacity to full height of 5,5 metres (18 ft), making it the most versatile portable gantry in the market.

Page: 354

▼ *Enerpac SBL-Series hydraulic gantries are used in a variety of applications to install turbines, transformers and other power generation equipment all over the world.*





Maximum Capacity (with 4 towers) (kN)	Model Number (4 towers)	Retracted Height A (mm)
1000	SL100	2050
2000	SL200	2731
3000	SL300	2715
4000	SL400N	2725
4000	SL400	3166
5200	SBL500	3028
6000	SBL600	4300
8976	SBL900	5004
10.484	SBL1100	4370

Tel: +45 63 12 83 00 | Email: ps@hymatik.com | www.hymatik.com | Hvidkaervej 27a, DK-5250 Odense SV, Denmark

Telescopic Hydraulic Gantries

Hydraulic Gantries

Telescopic Hydraulic Gantries are a safe, efficient way to lift and position heavy loads in applications where traditional cranes will not fit and permanent overhead structures for job cranes are not an option.

Hydraulic Gantries are placed on skid tracks to provide a means for moving and placing heavy loads, many times with only one pick.

Enerpac Hydraulic Gantry Systems:

- **ML-Serie Mini-Lift**
  Fits through standard doorway and is easily moved and set up. The ML40 gantry can be moved through the tightest spaces imaginable in all industrial settings.
- **SL-Series Super Lift**
  The cost-effective SL-Series Super Lift offer control and stability for everyday lifting applications below 4000 kN up to 9 metres.
- **SBL-Series Super Boom Lift**
  The heavy-duty SBL-Series Super Boom Lift boom style gantries offer increased lifting capacity of over 4000 kN to heights of 12 metres.

All Enerpac gantries are delivered with specific properties and control systems to ensure optimum stability and safety.

SL, SBL Series



Capacity with 4 towers:
1000 - 10.484 kN

Lift Height:
3,5 - 12 meters

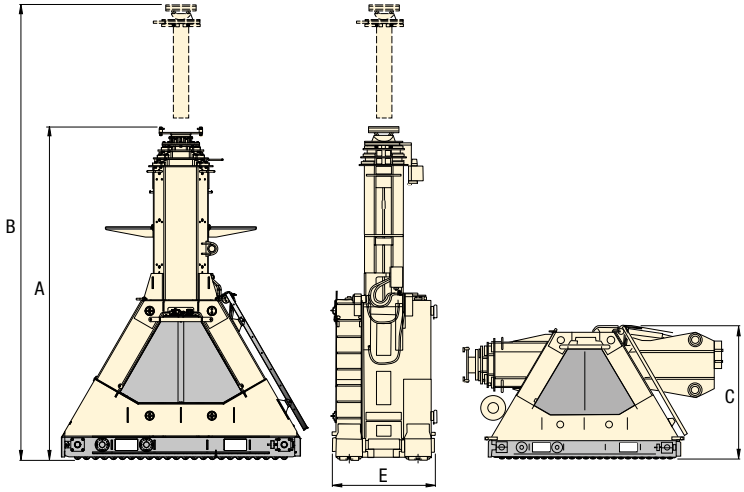

Stage 1		Stage 2		Stage 3		Transport Height	Skid Track Width		Model Number (4 towers)
Max. Height B (mm)	Max. Capacity * (kN)	Max. Height B (mm)	Max. Capacity * (kN)	Max. Height B (mm)	Max. Capacity * (kN)	C (mm)	E (mm)	(kg) [1]	
3400	1000	4750	600	–	–	1930	812	1735	**SL100**
4716	2000	6700	1360	–	–	2611	812	2200	**SL200**
4615	3000	6710	2000	–	–	2900	812	3250	**SL300**
4365	4000	6025	3000	7700	2000	2725	812	3600	**SL400N**
5224	4000	7232	4000	9140	1840	3170	1218	4600	**SL400**
4998	5200	6908	5200	8618	3000	3028	1218	6300	**SBL500**
6500	6000	8600	5000	10.600	3700	2250	1218	9000	**SBL600**
8304	8976	11.304	5924	–	–	2243	1218	13.350	**SBL900**
7004	10.484	9668	6756	12.002	3780	2244	1218	11.950	**SBL1100**

* Maximum capacity with 4 towers.

[1] Weight per tower

▼ Optional Gantry Accessories

Contact Enerpac for assistance by email at **enerpac.com/contact-us**



Skid Tracks

Allows for easy levelling of the gantry tower and reduce ground bearing pressure, available in two standard lengths, 3 and 6 m.



Header Beams

Sold in pairs and includes lifting points and fork pockets for easy positioning on gantry towers. Available in standard lengths of 8, 10 and 12 meters



Powered Side Shift

Electric propulsion controlled by standard gantry controls. Each set consists of 4 units.



Lifting Anchors

Designed to transfer the load to the top of the header beam. Can accommodate a 250 ton shackle or attach directly to the lifted load.

LH-Series, Low-Height Skidding System

ENERPAC

▼ LH-Series, Low-Height Skidding System



Low-Height Skidding System for Heavy Loads

The Ideal Low-Height Jack & Slide Solution

- **Low starting height saves time and increases versatility**
- **Portable design allows for easy transport and setup**
- **System can push or pull load without relocating skidding cylinder**
- **Skid track sections bolt together to allow each setup to be customized as needed**
- **Replaceable PTFE skid pads lower the total cost of ownership.**

Skidding Systems

The Skidding System is comprised of a series of skid beams moved by hydraulic push-pull cylinders, travelling over a pre-constructed skid track.

A series of special PTFE-coated Teflon® pads are placed on the skid tracks to reduce friction. The push-pull cylinders are then connected by hydraulic hoses to our Split-Flow Pump. The Split-Flow Pump can be mounted on an optional pump cart for easy transport.

An optional storage and transport frame easily holds the equipment in between use.

▼ *LH400, Low-Height Skidding System provides the service team with the ability to maneuver and transport a press frame.*



▼ *LH400 Skidding used to remove an old press from a facility to make room for new equipment.*



Low-Height Skidding System

Low-Height Skidding Jack Starter Kit - LH400SK

A complete starter kit is available to fit the needs of any jack and slide application. This system comes with two skidding units that will support up to 3560 kN in total.

This kit will get the job done, but there are optional accessories available in addition (see page 360-361).

Each skidding unit will have 1 push-pull unit, 2 skid beams and 5 skid tracks.

LH400SK Starter Kit includes:	Model Numbers	Qty
Push-Pull Unit (1780 kN)	**LHPP25**	2x
Skid Beam A (1 meter)	**LHSB1A**	2x
Skid Beam B (1 meter)	**LHSB1B**	2x
Skid Track (1 meter)	**LHST1**	10x
Storage/Transport Frame	**LHSF**	1x

The Split-Flow Pump (to be ordered separately) has 2 outlets and can be easily towed on the pump cart. After the job is complete, components can be stowed on the included storage frame.

LH Series



Skidding Capacity with two push-pull units:
3560 kN

Push-Pull Stroke:
600 mm

Maximum Operating Pressure:
700 bar

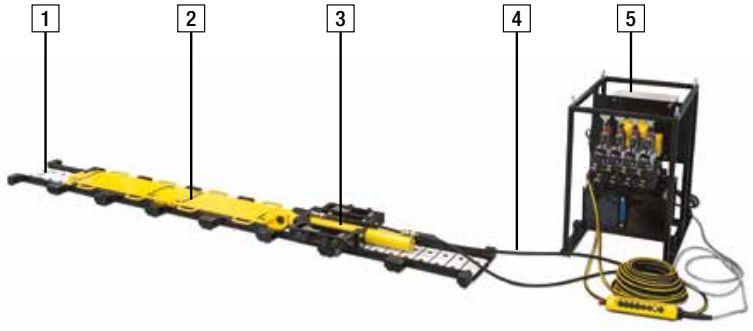

LH-Series, Low-Height Skidding System Requirements

1	Skid Track **LHST1**	Required
2	Skid Beam **LHSB1A + LHSB1B**	Required
3	Push-Pull Cylinder Unit **LHPP25**	Required
4	Hydraulic Hoses	Required
5	Split-Flow Electric Pump **SFP**	Required
6 *	Track Support	Application dependant
7 *	Storage-Transport Frame **LHSF**	Optional
8 *	Pump Cart **LHPC**	Optional

* not shown

LH400, Low-Height Skidding System (dimensions in mm)

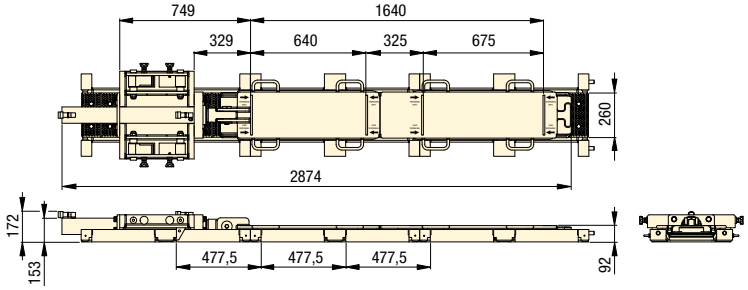



SFP-Series, Split-Flow Pump

Split-Flow pumps distribute an equal amount of hydraulic oil to a maximum of 8 outlets. Smart valve technology allows both controlled lifting and lowering of heavy loads.

Page: 336



LHPC Pump Cart

The LHPC pump cart easily tows pump around jobsite and can be used with all models of SFP-Series Split-Flow Pumps.



Hydraulic Power Packs

Enerpac offers a comprehensive range of hydraulic power packs that are optimized for use with Skidding Systems.



Hoses

Enerpac offers a complete line of high quality hydraulic hoses. To ensure the integrity of your system, specify only genuine Enerpac hydraulic hoses.

Page: 128

LH-Series, Low-Height Skidding Components

ENERPAC

▼ LHPP25 Low-Height Push-Pull Unit

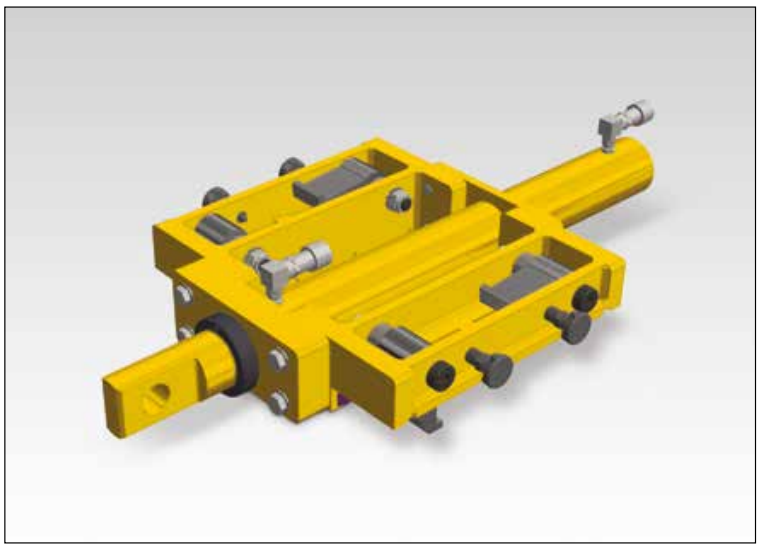

Push-Pull Unit

- Connects to first skid beam to push or pull load along skid track
- Easily reverse direction by switching reaction tabs
- Complies to ASME B30.1 and other safety standards.

▼ Low-Height Push-Pull Unit

Maximum Capacity (kN)		Model Number	Stroke	Weight
Push	Pull		(mm)	(kg)
222	97,8	**LHPP25**	600	111

▼ LHSB1A and LHSB1B Skid Beams



Skid Beams

- Interlocks without any fasteners to slide load over skid track;
  skid beam A (LHSB1A) attaches to the push-pull unit
  skid beam B (LHSB1B) attaches to skid beam A
- Polished stainless steel skid surface
- Carrying handles for easy transport.

▼ Skid Beams

Capacity (kN)	Model Number	Weight (kg)
890	**LHSB1A**	66
890	**LHSB1B**	63



◀ *Details of push-pull unit of LH400.*

Tel: +45 63 12 83 00 | Email: ps@hymatik.com | www.hymatik.com | Hvidkaervej 27a, DK-5250 Odense SV, Denmark

Low-Height Skidding Components

▼ LHST1 Skid Track

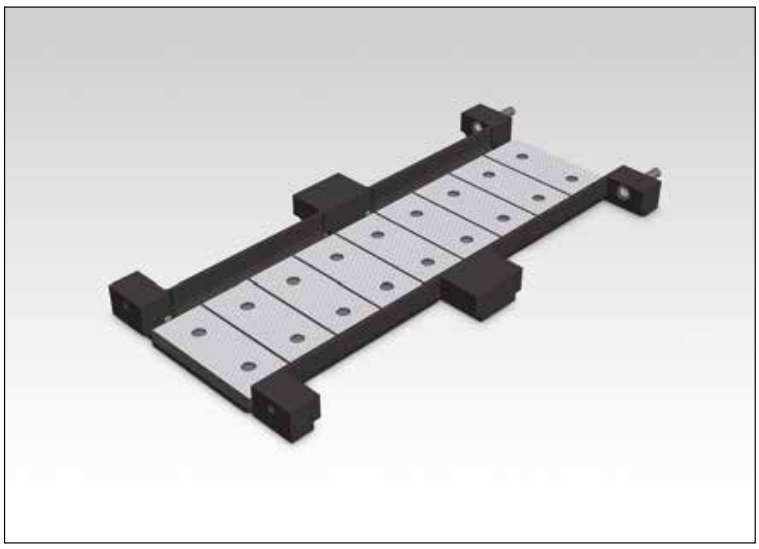

LH Series



Skidding Capacity with two push-pull units:
3560 kN

Push-Pull Stroke:
600 mm

Maximum Operating Pressure:
700 bar

Skid Track

- **Support the load for skidding operations**
- **Track sections bolt together**
- **Includes 9 pieces easily replaceable PTFE skid pads.**



Teflon® Pads

A series of special PTFE coated Teflon® pads are placed on the skid tracks. The PTFE surface is matched with the skid beam and designed to achive minimum friction coefficients.

Replacement Teflon® Pads come in packs of 12 pieces. Order model number **HSKSPS1**.

▼ Skid Track

Maximum Capacity (per skid track) (kN)	Model Number	Track Length (mm)	Weight (incl. pads) (kg)
890	**LHST1**	955	67



Storage and Transport Frame

For easy storage and transport of all low-height skidding components.

Fits following components:
2x LLPP25 Push-Pull Unit
2x LHSB1A Skid Beam A
2x LHBS1B Skid Beam B
10x LHST1 Skid Tracks

Model Number	Overall Dimensions L x W x H (mm)	(kg)
LHSF	1080 x 935 x 895	200

With all components stored dimensions are:
1080 x 935 x 1003 mm, and total weight 1350 kg.

▼ *An LH400 Skidding System allows the maintenance team to transport transformers with access limitations.*



▼ *Low-Height Skidding System assembly (LH400).*



HSK, LH-Series, Skidding Systems

ENERPAC

▼ Shown: **HSK1250 Skidding System**



The Ideal Jack and Slide Solution

Skidding Systems

The skidding system is comprised of a series of skid beams moved by hydraulic push-pull cylinders, travelling over a pre-constructed track.

A series of special PTFE coated pads are placed on the skid tracks. The PTFE surface is matched with a sliding plate under the Enerpac skid beams, designed to achieve minimum friction coefficients. The skid beams are connected by hoses to a hydraulic electric or diesel driven power pack.

In addition to our standard skidding systems, we have the capability to create customized skidding systems to meet your specific requirements.



Controls

Enerpac offers several options for controlling our skidding systems. Wireless Controls allows the operator the freedom to view the skidding operation from multiple locations while providing complete control of all system functions.
Manual controls offer a cost-effective solution by utilizing manual hydraulic valves mounted directly on the skidding system power unit.

HSK-Series, Skidding System

- **PTFE skid pads with dimpled surface for low friction and long lifetime**
- **Easy to replace skid pads, no tools necessary**
- **Bi-directional operation using push-pull cylinders avoid the need to reposition cylinders for switching direction**
- **Large load support surface on the skid beams for distributing load**
- **Bottom of skid shoes equipped with stainless steel sliding plates.**

LH-Series, Low-Height Skidding System

- **2-in-1 track design for added support**
- **Intuitive pump controls (SFP-Series Split-Flow Pump)**
- **Easily reversible to change skidding direction**
- **Portable design for quick setup.**

▼ *A custom hydraulic Low-Height Skidding System will provide the maintenance team with the ability to maneuver and transport transformers with physical access limitations.*



▼ *HSKJ2500 Skid Shoe Jack.*



Skidding Systems

Skidding Systems

Enerpac Skidding Systems are available in several versions:

- **B-Series (Skid Beam)** utilizes a tall skid beam with built-in push-pull cylinders. Skidding direction can be easily switched by flipping a lever on the attached gripper box.
- **J-Series (Skid Jack)** provides the same functionality as the B-Series with the added benefit of having a built-in cylinder for lifting or leveling the load.
- **LH-Series (Low-Height)** includes low-height skid beams that can fit in tight spaces while still offering high capacity. We also offer a track support for added rigidity when the surface is not fully supported.

HSK LH Series



Capacity:
125 - 250 ton

Push/Pull Stroke:
600 mm

Lifting Stroke:
175 mm

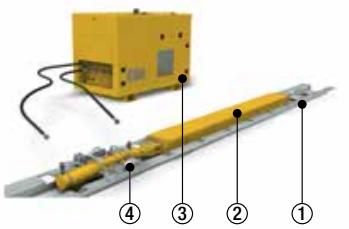

HSK-Series Skidding System Requirements

① Skid Track
② Skid Beam
③ Hydraulic Power Pack
④ Hydraulic Push-Pull Unit

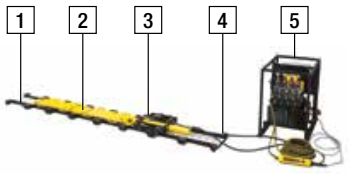

LH-Series Skidding System Requirements

1 Skid Track (required)
2 Skid Beam (required)
3 Push-Pull Cylinder Unit (required)
4 Hydraulic Hoses (required)
5 Split-Flow Electric Pump (required)
6 Track Support (optional, not shown)
7 Storage/Transport Frame (optional, not shown)
8 Pump Cart (optional, not shown)

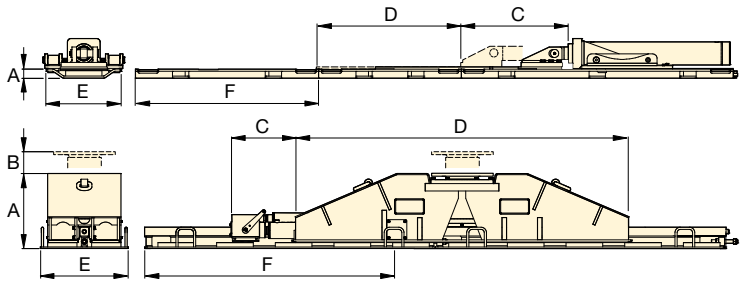



Skid Tracks

Include specially constructed and easily replaceable PTFE coated pads. Skid track is sold separately.



Hydraulic Power Packs

Enerpac offers a comprehensive range of hydraulic power packs that are optimized for use with Skidding Systems.



ETT-Series Turntables, Safe and controlled rotation

The ETT-Series Turntables is your solution for rotating heavy loads during, before or after a lifting and skidding operation.

Page: 366

Skidding Systems

Maximum Capacity (per beam) ton (kN)	Maximum Push-Pull Capacity ton (kN)		Model Number	Skid Beam Height (with track) A (mm)	Lifting Stroke B (mm)	Push-Pull Stroke C (mm)	Skid Beam Length D (mm)	Skid Beam Weight (kg)	Skid Track Width E (mm)	Skid Track Length F (mm)	Skid Track Weight (kg)
	Push	Pull									
125 (1250)	**22** (220)	**16** (160)	**HSKB1250**	309	–	600	2500	740	400	1983	120
125 (1250)	**22** (220)	**16** (160)	**HSKJ1250**	502	175	600	1690	790	400	1983	120
200 (2000)	**25** (255)	**14** (141)	**HSKLH2000**	204	–	600	2902	340	540	1998	120
250 (2500)	**40** (400)	**26** (260)	**HSKB2500**	374	–	600	3000	1020	600	1946	290
250 (2500)	**40** (400)	**26** (260)	**HSKJ2500**	600	175	600	1784	1450	600	1946	290
180 (1780)	**25** (255)	**11** (98)	**LH400 ***	92	–	600	1080	63	250	955	67

* Low-Height Skidding System, see pages 358 - 361 for detailed and technical information.

ETR-Series, Electric Trolley Systems

ENERPAC

▼ **ETR50H, Enerpac Trolley System** (shown with Trolley Track Plates)



- **High transport speed: 25 - 50 m/hour loaded, 100 m/hour unloaded**
- **Suited for repetitive movements**
- **Runs on simple flat steel plate**
- **Ease of maintenance: – long maintenance intervals – no consumables**
- **Clean usage – electric driven**
- **Built-in synchronization – no need for forced external mechanical connection to synchronize movements**
- **Easy transport - compact design**
- **Hydraulic lifting cylinder option available**
- **Kits to accommodate other lifting options also available.**

▼ *The trolley system speeds up offshore wind transition piece load out: the transition pieces are positioned in the clamping frames and moved along the track.*



▼ *ETR-Series electric trolley undergoing factory acceptance testing prior to shipment.*



Safe & Synchronized Travel

Product Overview

The ETR-Series Trolley System is comprised of electrically-driven trolleys which can carry heavy loads along a fixed track system.

The entire system is controlled by a hand held wireless control system.

A typical system is comprised of 4 Trolleys, 2 Tracks and one Controller. Trolley Tracks and Wireless Control must be ordered separately.



Control Panel and Cables

Operate up to 8 trolleys (same capacity each) using control panel with included wireless controller:

- Automatic synchronization of traveling with an accuracy of 10 mm (0.39 inch)
- Dual-band radio with automatic frequency search
- Wireless remote operation
- High and low speed settings
- Emergency stop switch
- Control cables operate trolley and provide feedback to controller.

Control Panel

Model Number (380-415 VAC, 32A)	Dimensions (mm)			
	L	W	H	(kg)
ETR-CPW8	1290	600	1100	250

Control Cables

Model Number	Description
ETR-CBL-15	15 metres control cable
ETR-CBL-25	25 metres control cable

Enerpac Trolley Systems

ETR-Trolley System

The Enerpac Trolley System provides an alternative method with increased benefits over traditional skidding methods.

Load movements are more stable due to the continuous movement and ability to precisely control travel speed including acceleration and deceleration.

Key features:

Low speed (loaded):	25 m/hr
High speed (loaded):	50 m/hr
Travel speed unloaded:	100 m/hr
Accuracy:	10 mm
Sideload:	1,5% rated load
Sound Level:	< 80 dBA

ETR Series



Capacity Per Trolley:
500 - 1000 kN

Travel Speed (loaded):
25 - 50 m/hr

Motor Power:
0,38 - 0,75 kW

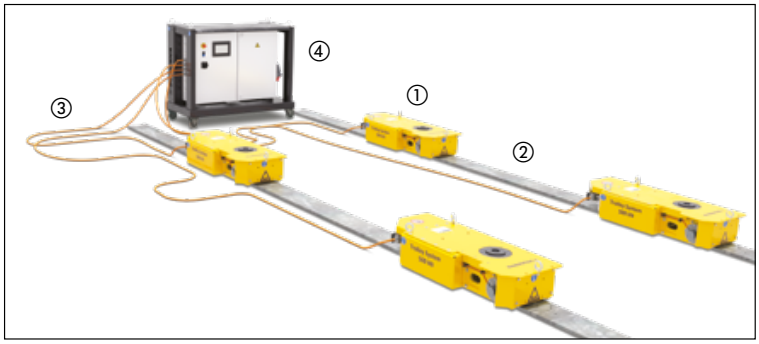

① Electric Trolley ETR-Series
② Track Plate ETR-TP-015 or ETR-TP-030
③ Control Cable ETR-CBL-15 or ETR-CBL-25
④ Control Panel ETR-CPW8 (including.wireless remote)
⑤ Split-Flow Electric Pump - SFP-Series Not shown. Optional for units with hydraulic cylinders



Trolley Track Plates

Track plates provide level guidance and support for the trolley. Two plates placed side-by-side are used for operation of ETR100-Series Trolleys. Maximum inclination of tracks is 0,2 degree.

Model Number	Description
ETR-TP-015	1,5 m Trolley track plate
ETR-TP-030	3,0 m Trolley track plate



Additional Mounting Options

Mounting kits are available to accommodate other lifting and rigging solutions.

Model Number	Description
ETR50-SMK	Enerpac SCJ50 on ETR50
ETR100-SMK	Enerpac SCJ100 on ETR100
ETR50-BMK	Swivel beam mount on ETR50
ETR100-BMK	Swivel beam mount on ETR100

ETR50

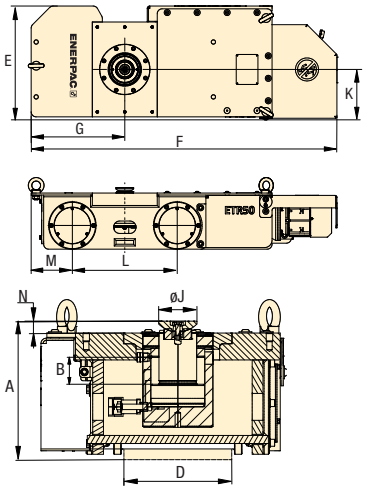

ETR100

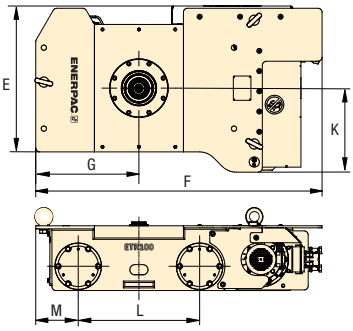

Capacity per Trolley Unit ton (kN)	Model Number (one unit)	Motor Power (kW)	Dimensions (mm) A	Hydraulic Stroke [1]	Track Width [2]	E	F	G	J	K	L	M	N	(kg)
50 (500)	**ETR50**	0,38	245	–	200	456	1225	375	125	202	420	165	10	310
	ETR50H		257	50					71				22	320
100 (1000)	**ETR100**	0,75	346	–	400	821	1415	510	170	415	600	210	15	850
	ETR100H		349	100					71				19	860

[1] ETR50H includes HCG502 Cylinder with CATS50 Swivel Saddle. ETR100H includes HCG1004 Cylinder with CATS101 Swivel Saddle.
[2] ETR100 series uses two track plates side-by-side.

ETT-Series, Turntables

ENERPAC

▼ ETT400 Turntable

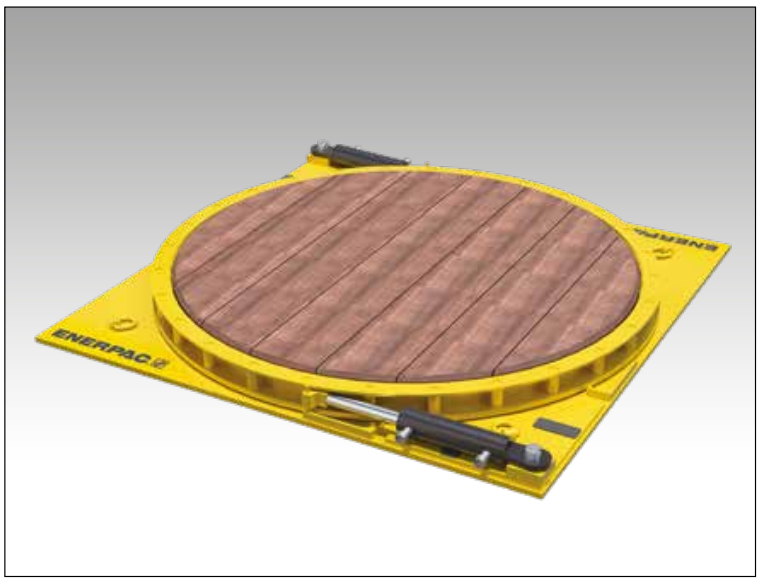

- Safe and controlled rotation of heavy loads
- Easily change rotation direction
- Dual capacity: 200 ton with one cylinder, 400 ton with two cylinders
- Compact size for use in applications with limited space
- Compatible with standard Enerpac pumps
- Hardwood surface.

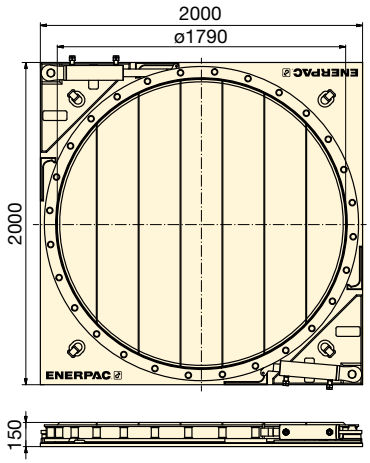

▼ SELECTION CHART

Maximum Load Capacity (kN)	Model Number	Cylinder Capacity * (kN)	Cylinder Oil Capacity * (cm^3) advance	retract	No. of Cylinders *	Rotation per Stroke (degrees)	Platform Diameter (mm)	(kg)
2000	**ETT200**	222	792	344	1	12,5	1790	1700
4000	**ETT400**	222	792	344	2	12,5	1790	1725

* Per cylinder. Cylinder modelnumber: **BRD259-ETT**

ETT Series

Maximum Capacity:
200 - 400 ton

Cylinder Capacity:
25 ton (222 kN)

Maximum Operating Pressure:
700 bar

Safe and controlled rotation

The ETT-Series is your solution for rotating heavy loads during, before or after a lifting and skidding operation.



SFP-Series, Split-Flow Pump

Split-Flow pumps distribute an equal amount of hydraulic oil to a maximum of 8 outlets. Smart valve technology allows both controlled lifting and lowering of heavy loads.

Page: 336



LH-Series, Low-Height Skidding

The ETT-Series are ideal in combination with our skidding systems, particular the LH-Series. Skidding and rotating in confined spaces is simplified.

Page: 358



Telescopic Hydraulic Gantries

The ETT-Series in combination with our hydraulic gantry SL-Series makes load handling in the most demanding situations easy.

Page: 356

Tel: +45 63 12 83 00 | Email: ps@hymatik.com | www.hymatik.com | Hvidkaervej 27a, DK-5250 Odense SV, Denmark

SPMT, Self-Propelled Modular Transporter

▼ SPMT600-360 with MTPP360 hydraulic power unit (HPU)



SPMT Series

Capacity:
60 ton (600 kN)

Transport Speed (unloaded - loaded):
3 - 1,5 km/h

Motor Size:
54 kW

- **Modular design for multiple configurations.**
- **Minimized height and slim design are ideal for in-plant operation**
- **Intelli-Drive wireless control system is intuitive and easy to use**
- **One power pack can operate 2-3 trailers maximum depending on model**
- **Two trailers and power pack can be shipped inside a 20 ft. container**
- **Hydraulic power unit is tier-4 diesel engine for reduced emissions.**

Self-Propelled Modular Transporter

The Enerpac Self-Propelled Modular Transporter (SPMT) features a minimized height and slim design, which makes it very easy to operate in confined spaces. Each wheel unit has a steering function as well as a lifting cylinder at its disposal. Two axles are driven, the centre axle is non-driven. Wheel propulsion is established by wheel drives.

The SPMT is operated by the Intelli-Drive Remote Controller. This remote controller can be used both hard wired and wireless (based on radio frequency).

The SPMT is a modular system and can be built up to a maximum configuration of six transporters in a row and two in the width. This is the maximum setup of units that can work together on just one Intelli-Drive Remote Controller.

The SPMT is a modular system comprised of trailers with 3 axle lines each and diesel hydraulic power units (HPU). Depending on the model number, the trailers and HPUs can be configured to a maximum of 4 trailers in 2 rows (4x2) or 6 trailers in 2 rows (6x2).

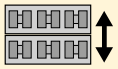

Crab

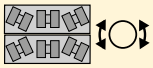

Carousel

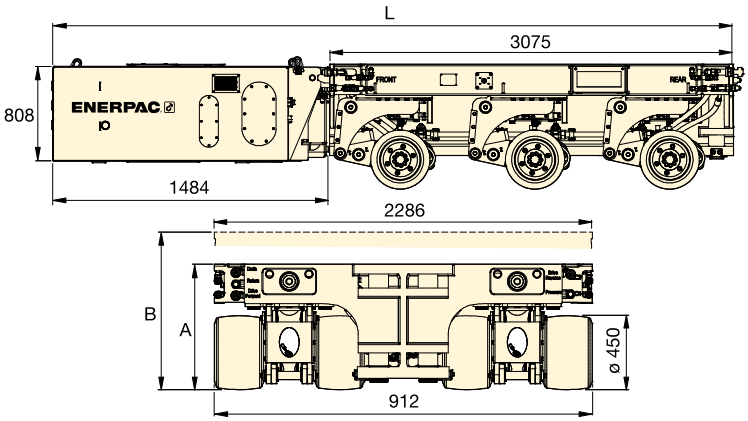

Capacity (per transporter) ton (kN)	Transporter Model Number	Maximum Configuration (transporters in rows)	Steering Range (degrees)	Steering Mode crab	Steering Mode carousel	Retracted Height A (mm)	Average Travel Height B (mm)	Overall Length L (mm)	Lifting Stroke (mm)	SPMT (kg)	HPU * Model Number	HPU * (kg)
60 (600)	**SPMT600-100**	4 x 2	+/- 50	●	–	767	959	4560	384	8000	**MTPP-100**	2500
	SPMT600-360	6 x 2	+/- 179	●	●	764	956	5188	384	8300	**MTPP-360**	2800

* HPU = 54 kW Power Pack Diesel is sold separately.

Tel: +45 63 12 83 00 | Email: ps@hymatik.com | www.hymatik.com | Hvidkaervej 27a, DK-5250 Odense SV, Denmark

Custom Heavy Lifting Solutions

ENERPAC



OFFSHORE GANTRY CRANE
The Enerpac Over Head Travel Crane (OHTC) comprises two pairs of lifting beams, with an overall width of 30m, and a lifting capacity of 4800 ton for lifting, moving and lowering the concrete blocks for the offshore highway.



STRAND JACK GANTRY
The strand jack gantry is a steel structure to facilitate erection and skidding back, forth and sideways of heavy loads. The Enerpac strand jack gantry can be used with either skidding systems or hydraulic gantries on top.



TRAVEL GANTRY
The travel gantry combines the safety and efficiency of a hydraulic gantry with the ease of use of SPMT (self-propelled modular transporter) technology. With a lifting capacity of 67 ton, the travel gantry sets a new standard in equipment and container handling.



BRIDGE LAUNCHING SYSTEMS
Spindle Bar System: group of in-line hollow plunger cylinders. The hollow plungers allow the steel bars to be inserted through the cylinders, which are used for pushing, pulling and braking. **Enerpac Enerlauncher** is an automatic and synchronous incremental hydraulic tandem launching system with a 800 ton lifting section and an 300 ton push/pull section.



JACK-UP SYSTEMS
The jack-up system is a custom developed multipoint lifting system – synchronically lift and mechanically hold. A typical system setup includes four jack-up units positioned under each corner of a load.

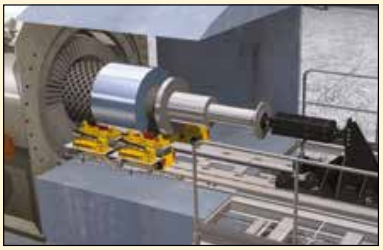

ROTOR REMOVAL AND INSTALLATION SYSTEM
The generator rotor removal and installation system is a custom developed product for removing and installing the rotor (field) in a power plant's generator. The system is designed to comply with the varying dimensions and challenging accessibility of a plant's generator.



CUSTOM HYDRAULIC PRESSES
Our hydraulic presses can be configured to fulfill a broad range of applications. Each press is designed and manufactured according to customer specifications and in cooperation with our engineering team.



SELF-ERECTING TOWER
The Enerpac Self Erecting Tower (ESET) is a self-erecting tower lift system that enables you to build a free standing gantry from ground level. The ESET can be supplied in various capacities and lifting heights and is built with standard modular components, enabling a flexible solution to future project demands.



LAS VEGAS WHEEL
Our expertise has been acknowledged by the world's leading industrial professionals and has contributed to the successful movement of a number of the most recognizable structures on earth. At the time of construction the Las Vegas High Roller was the largest observation wheel in the world. A custom hydraulic drive system was developed to propel the wheel for daily use and was also used to construct the wheel in sections.

Lifting Solutions from Enerpac

FROM SIMPLE TO COMPLEX – LIFTING SOLUTIONS FOR YOUR APPLICATION

For those who do the heavy lifting today, the stakes are high and the challenges complex. We know our customers put their reputations and physical well-being on the line to get the job done right. We take that very seriously.

Backed by a global legacy of ultra-reliable quality and superior precision, Enerpac Heavy Lifting Technology is pushing the industry forward with a wide range of advanced solutions that first and foremost ensure our customers operate safely and productively every day. It isn't about being compliant, or "as good" as the next guy; we outpace the competition by delivering technically superior solutions that are easy to design, safe to use and built to outlast.

CONSULTATIVE APPROACH TO HEAVY LIFTING

From the very first discussion to gain an understanding of your application to solution design, training and ongoing field support of your operators, you will find a structured process and a team of application experts who will advise you towards a successful solution.



SOLUTION CONSULTATION

- Requirements Specifications
- Selecting the Right Solution for Your Application

DESIGN & MANUFACTURING

- Design & Engineering
- Manufacturing Excellence

TESTING & TRAINING

- Quality Assurance
- Operation & Safety Training

ON-DEMAND SUPPORT

- On-the-job Application Engineer Support
- Routine Maintenance & Repair Services

Solution Consultations

ENERPAC

SOLUTION CONSULTATION

- Requirements Specifications
- Selecting the Right Solution for Your Application

Since the late 1950's, Enerpac has been steadfast in their commitment to work closely with customers to understand their lift needs and work-site environment. Not all lifts are the same. There are several factors that must be taken into consideration before recommending the best solution.

APPLICATION CONSIDERATIONS

LOAD CAPACITY
How much weight needs to be lifted, moved and/or positioned?

LIFT HEIGHT
How high does the load need to be lifted? Are there restrictions above or below the load?

TYPE OF LIFT
Will you lift from above or below?

SPACE
How much space is available to complete the task?

TIME
How the job needs to be completed within a set timeframe due to operational or environmental factors.

TRANSPORTATION
Does the load need to be transported as well as being lifted? How far and how often?

TOTAL COST OF OWNERSHIP
What productivity, labor or training costs need to be factored into the solution to make it the best long-term investment.

Because Enerpac engineers have designed solutions for a variety of applications over the years, they are well-equipped to minimize risks and to recommend a simpler solution that others may overlook. Built on a world-class reputation for developing products that meet the most common lifting applications, once your specifications are in the hands of the Enerpac experts, you are sure to receive a comprehensive recommendation that will save time and money while ensuring safety above all else.



Design & Manufacturing

Enerpac has the most complete offering of standard heavy lifting and positioning tools in the market. These products are designed to highest standards of performance and offer great flexibility to meet the demands of even the most challenging applications. Our manufacturing facility adheres to world-class production planning and inventory management to ensure your product arrives at your facility on time as specified.

DESIGN & MANUFACTURING

- Design & Engineering
- Manufacturing Excellence



Design & Engineering

Enerpac engineers are experienced in the latest software, rapid prototyping, failure analysis methods and engineering standards. This allows us to continuously improve and expand our product offering to meet ever changing needs of the market.

- CE, Machinery Directive 2006/42/E
- ASME: B30.1



Assembly & Quality Assurance

- All Enerpac products are assembled by highly trained individuals, working safely and efficiently from start to finish.
- The Hengelo, NL facility that manufactures the Enerpac heavy-lifting equipment holds several quality certifications.
- ISO 9001: 2015
- ISO 3834-2: 2005
- ISO 14001: 2015
- ISO 45001: 2018



Fabrication & Machining

- A dedicated steel fabrication and certified welding facility manufactures product components and support structures for the most demanding heavy-lifting applications.
- Complete in-house production is delivered using the latest CNC and conventional turning machines plus a full range of milling and boring equipment.



Testing & Training

ENERPAC

TESTING & TRAINING

- Quality Assurance
- Operation & Safety Training

The Enerpac facility, that makes and builds your heavy-lifting equipment, holds several quality system certifications giving you extra confidence in the safety and reliability of your heavy-lifting equipment. Whether your first lift or move is scheduled upon taking delivery of your new equipment or months later, you will have access to the dedicated Heavy-Lifting team to support your training or troubleshooting needs.



Factory Acceptance Testing (FAT)

Customers are invited to witness FAT, often combined with operator training. Under witness of Lloyd's Register, all equipment is functionally tested to maximum capacity, and in many cases up to 125% of rated load. Additional testing to meet standards compliance, government regulations or specific customer requirements are performed and documented at the same time.



Documentation

Upon delivery of your new heavy-lifting equipment, an operator's manual outlines the configuration of your system, detailed operating instructions with safety guidelines, and maintenance recommendations.



Training

Customers who attend factory acceptance training at Enerpac's facility can also receive a day of training on their heavy lifting equipment. Additional training or on-site custom training can also be arranged.



On-Demand Support

Once you take possession of your new heavy-lifting equipment, you have on-demand access to our field support team. And support continues with ongoing maintenance or system upgrades throughout the life of your assets.

ON-DEMAND SUPPORT

- On-the-job Application Engineer Support
- Routine Maintenance & Repair Services



On-the-Job Field Support

Should you ever require extra support while using your Enerpac Heavy-Lifting system on the job, our dedicated application engineers will work closely to guide your operators on appropriate use of our equipment. And to ensure job safety, they will travel to your job site as needed to ensure your project is completed timely and without incident.



Product Warranty

All Enerpac Heavy-Lifting equipment is built to stringent specifications and built to last. Should you ever encounter a defect in materials or workmanship under normal use, it will be remedied through our standard one-year warranty program.



Maintenance & Repair

Downtime is minimized with fast delivery of repair parts and consumables stocked at several locations worldwide. For those that want the added confidence of specialized technicians, the Enerpac Maintenance & Repair team are ready to perform your maintenance or repair services for you.

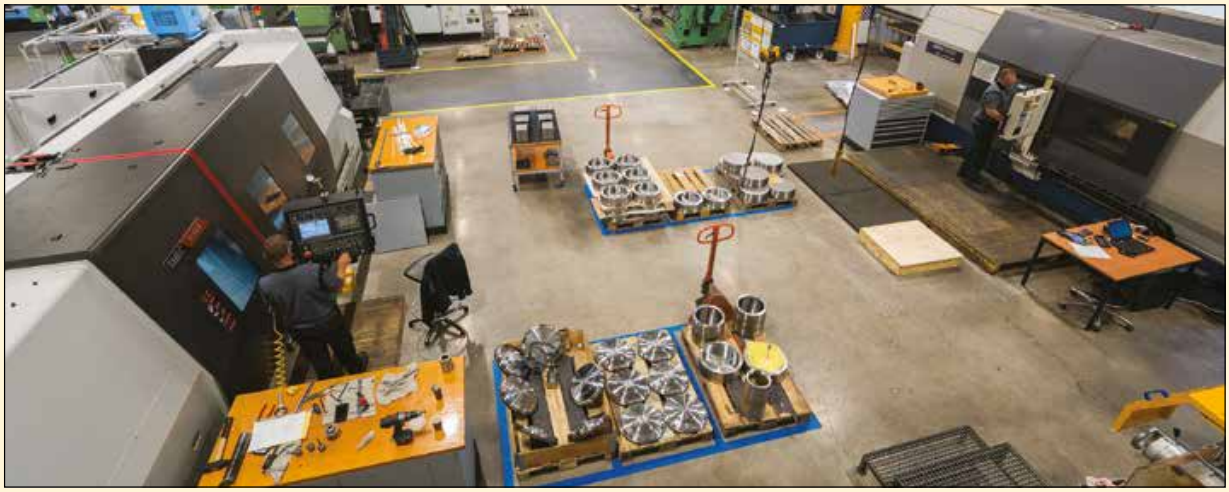

On-site Machining Tools

ENERPAC

Since joining the Enerpac portfolio, the design innovation of Mirage machines has continued to deliver new products that help get the job done faster, safer, and smarter. Explore the full Mirage product line from flange facing machines, milling machines, hot tapping, drilling and tapping machines to clamshell pipe cutters, decommissioning and band saws. All backed by Enerpac training, application support and service.

Design & Innovation

On-site Machine Tools are the result of over 25 years of expertise and innovation. The pioneering spirit continues under Enerpac ownership through our commitment to new product development. Watch out for more new tools being launched in the near future!

Continuous Improvement

Our specialist manufacturing operation is ISO9001 certified. This means we drive a culture of continuous improvement. Our team members are encouraged to find ways to improve today, tomorrow, and long into the future.

Specialist Support, Experience & Expertise

Each machining project presents difficult and unique challenges. Making the right choice for your next and any future projects can be complex. That is why our team is eager to support you through every step on your journey. Whether it is choosing the right specification, commissioning your machine, or maintenance - we're with you all the way.



Specialist Support, Experience & Expertise



Utilities



Nuclear



Oil & Gas



Petrochemicals



Power Generation



Ship Building, Maintenance and Repair



Wind Power



Construction and Mining

On-site Machining Tools – Overview

Machining Capacities	On-site Machining Tools	Series	Page
ø 1 - 161 inches ø 25,4 - 4100 mm	**Internal Mount Flange Facing Machines** Create the right flange sealing surface	FF MM-I	 376 ▶
ø 0 - 80 inches ø 0 -2032 mm	**External Mount Flange Facing Machines** Create the right flange sealing surface	MM-E	 377 ▶
ø 2 - 86 inches ø 51 - 2184 mm	**DL RICCI Clamshell Pipe Cutting and Bevelling Machines** Narrow Body, Mid-Size and Heavy-Duty	DLR	 378 ▶
ø 98 - 315 inches ø 2500 - 8000 mm	**General Orbital Milling Machines** Machine large flanges accurately and efficiently	OM	 380 ▶
ø 70 - 181 inches ø 1800 - 4600 mm	**Wind Power Orbital Milling Machines** Machine large flanges accurately and efficiently	WP	 381 ▶
40 - 120 inches 100 - 3000 mm	**Linear Milling Machines** On-site milling with workshop precision 2 and 3-Axis Configuration	LMR MR, MRY GMRF	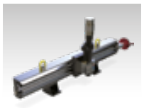 382 ▶
ø 1/2 - 60 inches ø 12,7 - 1524 mm	**Hot Tapping Machines & Line Stopping Actuators** Built to deliver power where it matters most	HTM, LPH MHT, CHT LSA	 384 ▶
ø 6 - 60 inches ø 152 - 1524 mm	**Decommissioning Diamond Wire & Band Saws** Cutting the toughest materials	MDWS BS	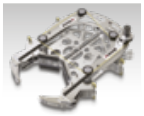 386 ▶
ø 2 - 12 inches ø 51 - 305 mm	**Drilling & Tapping Machines** Make light work of the toughest applications	HT T DDU	 388 ▶
ø ⅞ - 11 inch ø 22 - 279 mm	**GeniSYS™ IV 3-axis CNC Mill** Removal of cracked or broken studs and refurbishment of damaged threads	GeniSYS™	 390 ▶
ø ¾ - 40 inch ø 19 - 1016 mm	**Inline Isolation & Test Tools** Piping Isolation and Pressure Testing	MITT	 392 ▶

Flange Facing Machines

ENERPAC

Internal Mount Flange Facing Machines



FF120
- Mechanical tool manually operated
- Simple to operate
- Lightweight - only 15 lbs (6,8kg)
- Multiple leadscrew options allow for manually driven continuous fixed feeds for ASME standard surface finishes
- Calibrated slide to define cut depth and correct finish.



MM305I and MM610I
- Swivel toolpost for groove details, reduces the need for separate accessories
- Supplied with a range of 2 quick set base sizes for improved onto site operation
- Collet base allows for efficient machine mounting and centering.



MM860I and MM1000I
- 360 swivel toolpost for groove details, reduces the need for separate accessories (power feed on MM1000I)
- Supplied with a range of 3 quick set base sizes for improved onto site operation
- Adjustable height clamping jaws for efficient machine setting.



MM1500I
- Power feed 360 swivel toolpost for groove details, reduces the need for separate accessories
- Supplied with a range of 3 quick set base sizes for improved onto site operation
- Adjustable height clamping jaws for efficient machine setting.

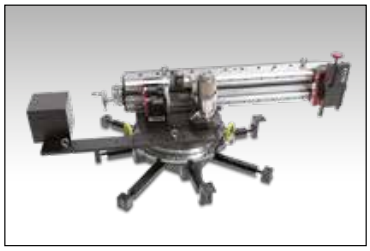

MM2000I
- Power feed 360 swivel toolpost for groove details, reduces the need for separate accessories
- Supplied with a range of 2 quick set base sizes for improved onto site operation
- Adjustable height clamping jaws for efficient machine setting.



MM3000I and MM4500I
- Power feed 360 swivel toolpost for groove details, reduces the need for separate accessories
- Supplied with a range of 3 quick set base sizes for improved onto site operation
- Adjustable height clamping jaws for efficient machine setting
- Milling accessories available with the Hydraulic drive version.

Flange Facing Machines

Flange Facers are known for precision construction, the results they deliver, and how easy they are to set-up on-site. These high-performing machines produce continuous groove facing feeds to ASME standards for the oil & gas, power generation and petrochemical industries.

MM-I Series feature
- Hardened slideways for long term accuracy
- High torque low noise drive
- Heat exchanger machining accessories available on most models.

Applications
- Heat exchanger flanges
- Hub profiles
- Lens ring joints & Raised face flanges
- Recessed gaskets and spigots
- Ring type joint grooves (RTJ)
- SPO compact flanges
- Swivel ring & TECHLOK flanges
- Welding preparations.

▼ *MM860I machine to ensure flange joint integrity.*



Internal Mount Flange Facing Machines

Flange Facing Diameter Range (inch)	Flange Facing Diameter Range (mm)	Machine Model Number	Drive Power Options: Pneum.	Drive Power Options: Hydr.
1 – 12	25 – 305	**FF120 ***		
2 – 12	51 – 305	**MM305I**	●	
2 – 24	51 – 610	**MM610I**	●	
6 – 34	152 – 864	**MM860I**	●	
6 – 40	152 – 1016	**MM1000I**	●	●
12 – 60	305 – 1524	**MM1500I**	●	●
24 – 80	610 – 2032	**MM2000I**	●	●
5 – 120	127 - 3048	**MM3000I**	●	●
83 – 161	2100 – 4100	**MM4500I**		●

* FF120 is not suitable for lens-ring joint flanges or ring type joint (RTJ) flanges.

Flange Facing Machines

External Mount Flange Facing Machines

FF MM Series



Internal Mount Facing Diameter:
1 - 161"/ 25,4 - 4100 mm

External Mount Facing Diameter:
0 - 80"/ 0 - 2032 mm

Cutting Resultant Roughness:
Ra 125-492 µin / 3,2-12,5 µ



MM200E
- Preloaded cross roller bearing drive, ensuring robust, accurate, repeatable machining
- Hardened slideways for long term accuracy
- Swivel toolpost for groove details, reduces the need for separate accessories
- Continuous fixed feed for ASME standard surface finish
- Quick set integrated clamping jaws.



MM300E
- Preloaded cross roller bearing drive, ensuring robust, accurate, repeatable machining
- Hardened slideways for long term accuracy
- Swivel toolpost for groove details, reduces the need for separate accessories
- Multiple continuous fixed feeds for ASME standard surface finishes
- Quick set intergrated clamping jaws.

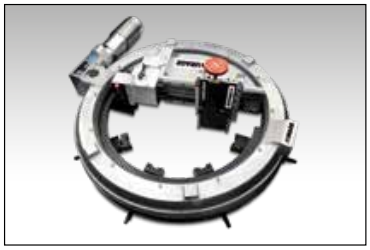

MM600E
- Preloaded cross roller bearing drive, ensuring robust, accurate, repeatable machining
- Hardened slideways for long term accuracy
- Power feed 360 swivel toolpost for groove details, reduces the need for separate accessories
- Multiple continuous fixed feeds for ASME standard surface finishes
- Quick set intergrated clamping jaws.



MM760E, MM1000E, MM1250E, MM1500E, MM1775E, MM2000E
- Continuous variable auto-feed for ASME standard finishes
- Choice of pneumatic and hydraulic drive motors
- Quick-set radial clamping adjustment
- Quick-set axial adjustment jaws
- Heavy duty bearing construction for high metal removal rates and accuracy
- Heat exchanger kits for back facing and slot machining in one operation.

Surface finish & accuracy

All flange facing machines provide a serrated finish with 30-55 grooves per inch and a resultant roughness of between Ra 3,2-12,5µ (125-492 micro inches). Geared multiple continuous groove facing feeds for a gramophone finish (ASME Standard).

External Mount Flange Facing Machines

Flange Facing Diameter Range (inch)	Flange Facing Diameter Range (mm)	Machine Model Number	Drive Power Options: Pneum.	Drive Power Options: Hydr.
0 – 8	0 – 203	**MM200E**	•	
0 – 12	0 – 305	**MM300E**	•	
0 – 24	0 – 610	**MM600E**	•	
0 – 30	0 – 762	**MM760E**	•	•
0 – 40	0 – 1016	**MM1000E**	•	•
0 – 50	0 – 1270	**MM1250E**	•	•
0 – 60	0 – 1524	**MM1500E**	•	•
0 – 70	0 – 1778	**MM1775E**	•	•
0 – 80	0 – 2032	**MM2000E**	•	•

▼ *MM600E external mount flange facing machine to ensure flange joint integrity.*



Clamshell Pipe Cutting & Bevelling Machines

ENERPAC

Narrow Body & Mid-Size Clamshell Cutters

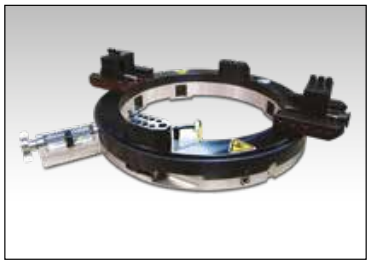

DLR-NB12, NARROW BODY CLAMSHELL CUTTER

- NB or "Narrow Body" portable clamshells are ideal when space is at a premium
- Standard NB-series cover a range from 2 to 36" outside diameter (51 to 914 mm)
- Narrow body design: ideal when space is at a premium or obstructions present
- Pneumatic, hydraulic, and electric drive options
- Several different drive options are available to best position the motor for a specific machining application
- Accepts a wide range of accessories to increase performance and expand capabilities
- Full range of bevel and sever tools available.



DLR-MS30, MID-SIZE CLAMSHELL CUTTER

- Mid-size machines weigh less than the HD heavy-duty series, but provide greater rigidity than the NB-narrow body series
- Standard MS-series cover a range from 4⅛ to 48¼" outside diameter (105 to 1226 mm)
- Increased manoeuvrability and greater clearance than the HD series
- Several different drive options are available to best position the motor for a specific machining application
- Accepts a wide range of accessories to increase performance and expand capabilities
- Full range of bevel and sever tools available.



◀ *NB-model narrow body clamshell cutter.*

DL Ricci Clamshell Cutters

Clamshell cutters in the Enerpac range remain true to the pioneering designs that made DL Ricci the 'go-to' brand for machinists worldwide. Outstanding performance and a comprehensive choice has seen them used widely for applications in new construction, decommissioning, component replacement, fabrication, and maintenance.

Robust and efficient pipe cutting and bevelling

Designed for any industry that needs pipe or tube cutting, or any pipe end preparation weld repair. This may be in oil and gas sector, power generation, ship building/dock yards, or processing plants during maintenance and shut downs.

Applications

- Pipe cutting
- Weld preparation
- Cutting materials, including super duplex, carbon steel, stainless steel, hastelloy and incolloy
- For pipe diameters up to 86 inch (2184 mm)
- Ideal for projects beyond the usual clamshell configuration – using a wide range of purpose designed accessories.

Included as Standard with Each Machine

- Clamshell body
- Locators & extensions covering the full range
- Slides
- Motor & Mounting
- Air Caddy
- Tool Kit
- Manual
- Shipping crate.

NB Narrow Body Series Clamshell Cutters

Mounting Outside Diameter (min. - max.)		Machine Model Number	Drive Power Options		
(inch)	(mm)		Pneumatic	Hydraulic	Electric
2 – 4½	51 – 114	**DLR-NB4**	●	●	
2⅜ – 6⅝	60 – 168	**DLR-NB6**	●	●	
3½ – 8⅝	89 – 219	**DLR-NB8**	●	●	●
4½ – 10¾	114 – 273	**DLR-NB10**	●	●	●
6⅝ – 12¾	168 – 324	**DLR-NB12**	●	●	●
8⅝ –14	219 – 356	**DLR-NB14**	●	●	●
10⅝ – 16	219 – 406	**DLR-NB16**	●	●	●
12¾ – 18	324 – 457	**DLR-NB18**	●	●	●
14 – 20	356 – 508	**DLR-NB20**	●	●	●
18 – 24	457 – 609	**DLR-NB24**	●	●	●
20 – 26	508 – 660	**DLR-NB26**	●	●	●
22 – 28	559 – 711	**DLR-NB28**	●	●	●
24 – 30	610 – 762	**DLR-NB30**	●	●	●
26 – 32	661 – 813	**DLR-NB32**	●	●	●
30 – 36	762 – 914	**DLR-NB36**	●	●	●

MS Mid-Size Series Clamshell Cutters

Mounting Outside Diameter (min. - max.)		Machine Model Number	Drive Power Options	
(inch)	(mm)		Pneumatic	Hydraulic
4⅛ – 13	105 – 330	**DLR-MS12**	●	●
7⅜ – 16¼	187 – 413	**DLR-MS16**	●	●
9⅜ – 18¼	238 – 464	**DLR-MS18**	●	●
11⅜ – 20¼	289 – 514	**DLR-MS20**	●	●
15⅜ – 24¼	391 – 616	**DLR-MS24**	●	●
19⅜ – 28¼	492 – 718	**DLR-MS28**	●	●
21⅜ – 30¼	543 – 769	**DLR-MS30**	●	●
23⅜ – 32¼	594 – 819	**DLR-MS32**	●	●
27⅜ – 36¼	695 – 921	**DLR-MS36**	●	●
27⅞ – 36¾	708 – 934	**DLR-MS365**	●	●
33⅜ – 42¼	848 – 1073	**DLR-MS42**	●	●
39⅜ – 48¼	1000 – 1226	**DLR-MS48**	●	●

Tel: +45 63 12 83 00 | Email: ps@hymatik.com | www.hymatik.com | Hvidkaervej 27a, DK-5250 Odense SV, Denmark

Clamshell Pipe Cutting & Bevelling Machines

HD Heavy-Duty Clamshell Cutters



DLR Series

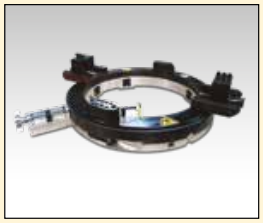

Outside Mounting Diameter Range:
2 - 86 inches

Outside Mounting Diameter Range:
51 - 2184 mm

DLR-HD54, HEAVY-DUTY CLAMSHELL CUTTER

- **Robust body design - ideal for large diameter heavy wall pipe applications**
- **16 HD-models cover a range of 20 - 86" outside diameter (508 - 2184 mm)**
- **Pneumatic and hydraulic drive options**
- **Fully adjustable heavy duty bearing design provides greater serviceability**
- **Stepped and keyed gear clamps equipped with a through bolt provide a positive fit at each assembly joint**
- **Accepts a wide range of accessories to increase performance and expand capabilities**
- **Full range of bevel and sever tools available.**

HD Heavy-Duty Series Clamshell Cutters

Mounting Outside Diameter (min. - max.)		Machine Model Number	Drive Power Options	
(inch)	(mm)		Pneumatic	Hydraulic
20 – 32	508 – 813	**DLR-HD32**	•	•
24 – 36	610 – 914	**DLR-HD36**	•	•
27 – 39	686 – 990	**DLR-HD39**	•	•
31 – 43	787 – 1092	**DLR-HD43**	•	•
33 – 45	838 – 1143	**DLR-HD45**	•	•
36 – 48	915 – 1219	**DLR-HD49**	•	•
38 – 50	966 – 1270	**DLR-HD50**	•	•
41 – 53	1042 – 1346	**DLR-HD53**	•	•
42 – 54	1067 – 1360	**DLR-HD54**	•	•
43 – 55	1092 – 1397	**DLR-HD55**	•	•
45 – 57	1143 – 1448	**DLR-HD57**	•	•
48 – 60	1220 – 1524	**DLR-HD60**	•	•
54 – 66	1372 – 1676	**DLR-HD66**	•	•
60 – 72	1524 – 1828	**DLR-HD72**	•	•
68 – 80	1728 – 2032	**DLR-HD80**	•	•
74 – 86	1880 – 2184	**DLR-HD86**	•	•

Recommended Accessories for Clamshell Cutters

Other clamshell accessories available. Details available on request.

Counter-bore Swivel Head Modules

- 10 inch size available
- Match boring applications
- Up to 60 degree adjustability in the head
- Internal diameter bevelling.

Description	Part Number
2 inch travel	**F0108A1224AA-SK**
6 inch travel	**F0108A1224AB-SK**

Low Profile Tool Slide

- Brings cut line closer to the back of machine
- Allows cutting & bevelling on short pipe sections
- Use for facing, RTJ grooves and compound angle weld preparations.

Description	Part Number
Low profile slide	**F0130A0016XX**

Out-of-round Tool Block Slide

- Dual compensating Spring Assembly
- Rides on OD of pipe and tracks the contour
- For up to 1 inch out-of-round.

Description	Part Number
Out of round slide	**F0130A0022XX**
Tripper for NB models	**F0145A0019XX**
Tripper for MS models	**F0145A0020XX**
Tripper for HD models	**F0145A0028XX**

General Orbital Milling Machines

ENERPAC

▼ OM6000 Orbital Milling Machine



OM Series

Cutting Diameter Range:
98 - 315 inches

Cutting Diameter Range:
2500 - 8000 mm

General Orbital Milling Machines

Orbital milling machines are designed to deliver fast material removal and achieve high accuracy across large flange diameters.

Applications

- Machining crane bearing faces
- Repairing drag lines
- Machining large flanges
- Machining ship thruster flanges.

Machine large flanges accurately and efficiently

- **Precision flatness tolerances across large diameters**
- **Hydraulic high-torque anti-backlash drive**
- **Precision preloaded linear rotary drive**
- **Adjustable fast-set hydraulic chuck**
- **Rigid and adjustable mounting base.**

▼ *Machining crane bearing face.*



▼ *Milling a ship thruster flange.*



General Orbital Milling Machines

Cutting Diameter Range (min. - max.) (inch)	(mm)	Machine Model Number	Hydraulic Power Drive
98 – 178	2500 - 4500	**OM4500**	•
98 – 237	2500 – 6000	**OM6000**	•
138 – 315	3500 – 8000	**OM8000**	•

Tel: +45 63 12 83 00 | Email: ps@hymatik.com | www.hymatik.com | Hvidkaervej 27a, DK-5250 Odense SV, Denmark

Wind Power Orbital Milling Machines

▼ WP3500 Wind Power Orbital Milling Machine

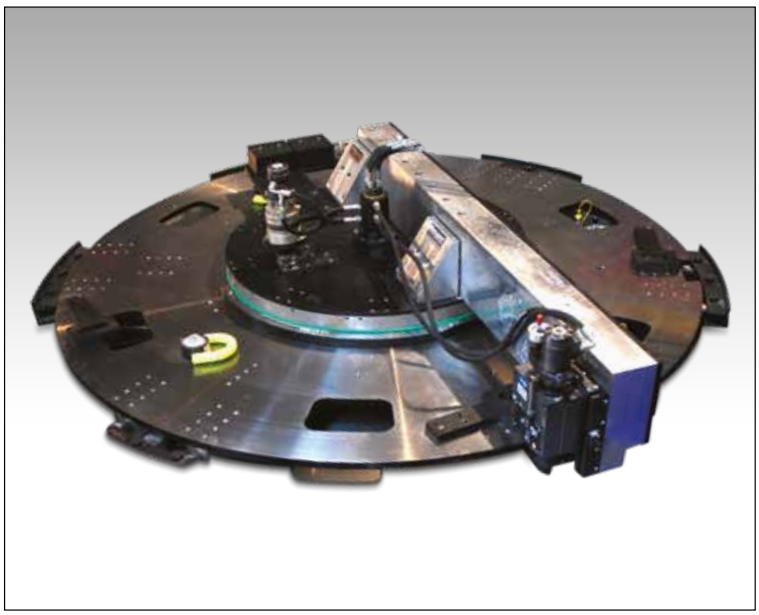

WP
Series

Cutting Diameter Range:
70 - 181 inches

Cutting Diameter Range:
1800 - 4600 mm

Wind Power Orbital Milling Machines

The wind power orbital milling range is designed especially for companies manufacturing wind turbine rotor blades and towers.

Applications

- Wind turbine blade root end milling
- Wind tower flange machining.

Machine large flanges accurately and efficiently

- **Fully packaged system; includes trolley, power unit and base**
- **Accurate and repeatable process time**
- **Minimum distortion fast mount hydraulic base**
- **Adjustable arm for different diameters**
- **Patented hydraulic mounting system for blade and tower production**
- **Direct drive spindle**
- **High torque anti-backlash drive.**

▼ *Wind tower machining with WP4600.*



▼ *WP3500 milling turbine blade end.*



Wind Power Orbital Milling Machines

Cutting Diameter Range (min. - max.) (inch)	Cutting Diameter Range (min. - max.) (mm)	Machine Model Number	Hydraulic Power Drive
70 – 96	1800 - 2450	**WP2500**	•
90 – 137	2300 – 3500	**WP3500**	•
110 – 181	2800 – 4600	**WP4600**	•

Linear Milling Machines

ENERPAC

2-Axis Milling Machines

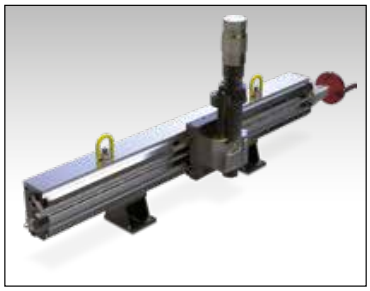

LMR1000, 2-AXIS MILLING MACHINE
- Ideal for lightweight applications
- Hand feed to main axis; auto feed optional
- Features ER40 Collet with ISO30 spindle option
- Choice of Pneumatic and Hydraulic drive.

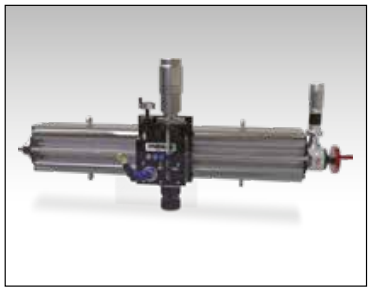

MR1000, 2-AXIS MILLING MACHINE
- Induction hardened 'V' rails ensure accuracy and durability
- Ball-screw feed
- Hand & auto feed to main axis
- Direct drive ISO 40 spindle
- Choice of Pneumatic and Hydraulic drive
- Variety of mounting options including; bolting, switch magnets, pipe chain clamps and gantry.

LMR, MR, MRY Series

X-Axis Maximum Stroke:
40 - 120" / 1,0 - 3,0 m

Y-Axis Maximum Stroke (MRY-Series only):
12 inches / 305 mm

3-Axis Milling Machines

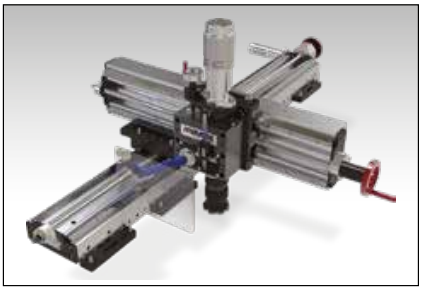

MRY1500, 3-AXIS MILLING MACHINE
- Induction hardened 'V' rails ensure accuracy and durability
- Ball-screw feed
- Hand & auto feed to main axis
- Direct drive ISO 40 spindle
- Choice of Pneumatic and Hydraulic drive
- Variety of mounting options including; bolting, switch magnets, chain clamps and gantry.

▼ *MRY Milling machine on a heat exchanger.*



2-Axis Linear Milling Machines

X-Axis Maximum Stroke (inch)	X-Axis Maximum Stroke (mm)	Machine Model Number	Drive Power Options: Pneumatic	Drive Power Options: Hydraulic
40	1000	**LMR1000**	•	•
60	1500	**LMR1500**	•	•
80	2000	**LMR2000**	•	•
40	1000	**MR1000**	•	•
60	1500	**MR1500**	•	•
80	2000	**MR2000**	•	•
120	3000	**MR3000**	•	•

3-Axis Linear Milling Machines

X-Axis Maximum Stroke (inch)	X-Axis Maximum Stroke (mm)	Y-Axis Maximum Stroke (inch)	Y-Axis Maximum Stroke (mm)	Machine Model Number	Drive Power Options: Pneumatic	Drive Power Options: Hydraulic
60	1500	12	305	**MRY1500**	•	•
80	2000	12	305	**MRY2000**	•	•
120	3000	12	305	**MRY3000**	•	•

Tel: +45 63 12 83 00 | Email: ps@hymatik.com | www.hymatik.com | Hvidkaervej 27a, DK-5250 Odense SV, Denmark

Linear Milling Machines

Gantry Milling Machine

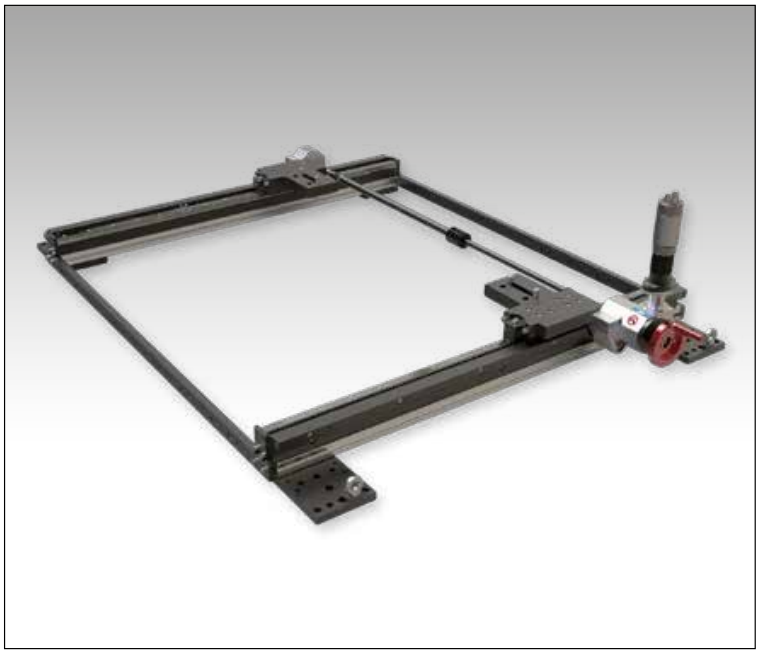

GMRF1000, GANTRY RAIL KIT

- **Modular jointing system for lengths up to 10 m**
- **Linear rail and precision carriages**
- **Quick set up with jacking system**
- **Auto and manual feed**
- **Optional quick-set magnets for mounting.**

GMRF Series

X-Axis Maximum Stroke:
40 - 394" / 1,0 - 10,0 m

Y-Axis Maximum Stroke:
40 - 118"/ 1,0 - 3,0 m

Linear Milling Machines – Take workshop precision to your next on-site milling project

These precise and robust milling machines are available in 2 and 3 axis configurations. Each includes the latest workshop tool technology in a portable format. For a fast and efficient set-up, you can choose our optional switch magnets.

Applications

- Motor and pump mounting pads
- Aerospace machining
- Crane pedestals
- Heat exchanger repair
- Shaft keyways
- Steel mill housings
- Turbine split line machining.



I-Beam end face milling with a GMRF1000. ▶

Gantry Milling Machine

Feed Type	X-Axis Max. Stroke Options [1]		Y-Axis Max. Stroke Options [2]		Machine Model Number	Drive Power Options	
	(inch)	(m)	(inch)	(m)		Pneumatic	Hydraulic
Rack Feed	40 - 394	1,0 - 10,0	40 - 118	1,0 - 3,0	**GMRF1000**	•	•

[1] Common base module 1000 mm.

[2] MR milling rail required. Extension kits available.

Hot Tapping Machines

ENERPAC

▼ **HTM100**



HTM, MANUAL HOT TAPPING

- Operates to 1480 psi (102 bar)
- Versatile hot taps, bypass lines and completion plugs
- Manual rotation & feed
- Optional pneumatic feed
- 2" NPT connection
- Lightweight construction.

▼ **LPHT312**

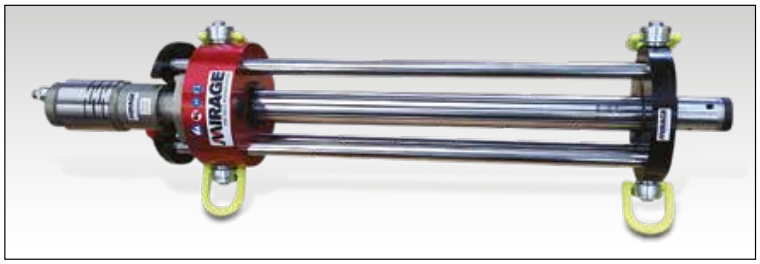

▼ **MHT312**



LPHT312, LOW PRESSURE HOT TAPPING

- Operates up to 285 psi (20 bar)
- Pneumatic or hydraulic drive
- Depth stop to ensure correct hot tap distance.

MHT, HOT TAPPING MACHINES

- Pressure rating up to 1480 psi (102 bar)
- Helical geared drive situated close to the cutter
- Hydraulic and pneumatic drive options
- Industry standard connection flanges
- Compatible with industry standard tooling
- Fast traverse feed motors available
- Cutter holders included
- Interchangeable seal cartridge.

HTM, LPHT MHT Series



Tapping Diameters:
½ - 60" / 12,7 - 1524 mm

Maximum Stroke:
18 - 150" / 457 - 3810 mm

Maximum Operating Pressure:
285-1480 psi / 20-102 bar

Hot Tapping – Built to deliver power where it matters most

Hot tapping is a high-pressure intervention and our range of hot tapping machines can help towards a safe and effective solution. Industry-leading innovations used include a helical gear drive located as close to the cutting head as possible for maximum efficiency, rotary pressure seals, and four fixed feeds.

Applications

- Construction tie-ins
- Gas distribution
- Petrochemical pipelines
- Subsea pipelines
- Temporary installation
- Transmission pipelines
- Valve installation and repair
- Water mains pipelines
- Wellhead maintenance.

▼ *On-site hot tapping with MHT312.*



Hot Tapping Machines

Tapping Diameters (Min. - Max.)		Maximum Stroke		Max. Operating Pressure		Machine Model Number	Drive Power Options	
(inch)	(mm)	(inch)	(mm)	(psi)	(bar)		Pneumatic	Hydraulic
½ – 4	12,7 – 102	18	457	1480	102	**HTM100**	*	*
½ – 6	12,7 – 152	32	813	1480	102	**HTM150XL**	*	*
3 – 12	76,2 – 305	30	762	285	20	**LPHT312**	•	•
3 – 12	76,2 – 305	42	1067	1480	102	**MHT312**	•	
4 – 20	102 – 508	72	1829	1480	102	**MHT420**		•
8 – 24	203 – 609	80	2032	1480	102	**MHT824**		•
12 – 36	76,2 – 914	110	2794	1480	102	**MHT1236**		•
12 – 42	76,2 – 1066	132	3353	1480	102	**MHT1242**		•
24 – 60	203 – 1524	150	3810	1480	102	**MHT2460**		•

* HTM has manual rotation & feed.

Hot Tapping Machines & Line Stop Actuators

▼ **CHT3000**



CHT LSA Series

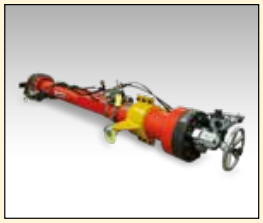

Tapping Diameters:
3 - 48" / 76 - 1219 mm

Maximum Stroke:
43 - 150" / 1092 - 3810 mm

Maximum Operating Pressure:
1480-5000 psi / 102-350 bar

▼ **LSA1420-H**



LSA-Series Line Stop Actuators

Line Stop Actuators (LSA) are used in conjunction with the required line stop head and housings to carry out line stops in surface or subsea environments.
The range is designed for easy use on pipelines in various materials and differing wall thickness. Their use provides temporary pipeline isolation, temporary or permanent bypass and no costly interruption of service.

CHT, HOT TAPPING MACHINES

- Working pressure capacity up to 5000 psi (350 bar)
- Drive as close to the cut enhances cut efficiency
- Auto feed - infinitely variable for differing cut conditions
- Constant pressure seal monitoring ports
- Internally pressure balanced for higher pressure applications
- Industry standard connection flanges
- Compatible with standard industry tooling.

LSA, LINE STOP ACTUATORS

- Series of four hydraulic line stop actuators covering a plugging head size range of 4 to 48 inches (102 - 1219 mm)
- Maximum working pressure of 1480 psi (102 bar) at 181 ˚F (83 ˚C)
- Failsafe mechanical lock prevents control rod movement
- Anti-rotation feature to ensure aligned plugging head deployment
- Hydraulic control situated at the working end of the cylinder for ease of use
- Visible control bar depth control.



▲ *CHT3000 hot tapping application for petrochemical pipeline installation.*

CHT-Hot Tapping Machines & LSA-Line Stop Actuators

Tapping Diameters (Min. - Max.)		Maximum Stroke		Max. Operating Pressure		Machine Model Number	Drive Power
(inch)	(mm)	(inch)	(mm)	(psi)	(bar)		Hydraulic
3 – 12	76 – 305	43	1092	5000	350	**CHT1000**	•
3 – 16	76 – 406	66	1676	5000	350	**CHT1675**	•
6 – 24	152 – 609	80	2032	5000	350	**CHT2000**	•
12 – 48	305 – 1219	150	3810	5000	350	**CHT3000**	•
4 – 12	102 - 305	72	1829	1480	102	**LSA412-H**	•
14 – 20	356 - 508	102	2591	1480	102	**LSA1420-H**	•
22 – 36	559 - 914	140	3556	1480	102	**LSA2236-H**	•
38 – 48	965 - 1219	140	3556	1480	102	**LSA3848-H**	•

▼ *CHT2000 hot tapping offshore application.*

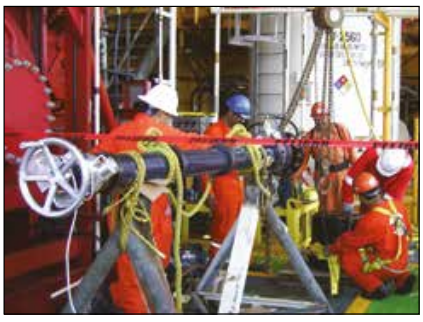

Decommissioning Diamond Wire Saws

ENERPAC

▼ MDWS1638-H



MDWS
Series

Cutting Diameters:
6 - 60" / 152 - 1524 mm

Cutting the toughest materials in the most challenging environments

- **Strong aluminum frame**
- **Overload clutch for bow damage prevention**
- **Hydraulic Auto Clamp and auto-feed**
- **Diver and ROV compatible**
- **Available with optional flotation modules for deep water use**
- **User replaceable clamp contact pads, wheels, and wheel liners**
- **Crimped or continuous loop wires available.**

Decommissioning Saws

A range of portable saws for a diverse range of tubular severance projects. The band saw range delivers a cost-effective solution to cold cutting requirements in either surface or subsea situations. Diamond wire saws are ideal for cutting through dissimilar materials quickly.

Applications

- Offshore platform decommissioning
- Conductors, caissons, piles
- Multiple grouted strings
- Subsea ROV-applications
- Subsea structures
- Pipes, casings and risers.

Items included with each machine;

- Diamond wire rope
- Toolkit
- Storage / shipping crate
- CE Certificate
- Packing list and manual.



▲ *MDWS Diamond Wire Saw lowered into sea.*

▼ *Subsea pile cutting.*

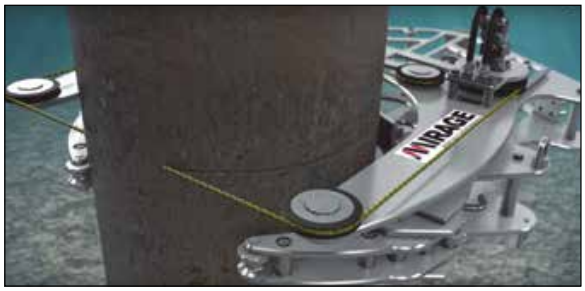

Decommissioning Diamond Wire Saws

Cutting Diameters (Min. - Max.) (inch)	(mm)	Machine Model Number	Main Application	Hydraulic Drive Power
6 – 20	152 – 508	**MDWS620-H**	Subsea	•
16 – 38	406 – 965	**MDWS1638-H**	Subsea	•
36 – 60	914 – 1524	**MDWS3660-H**	Subsea	•

On-site Band Saws

▼ BS1636-H

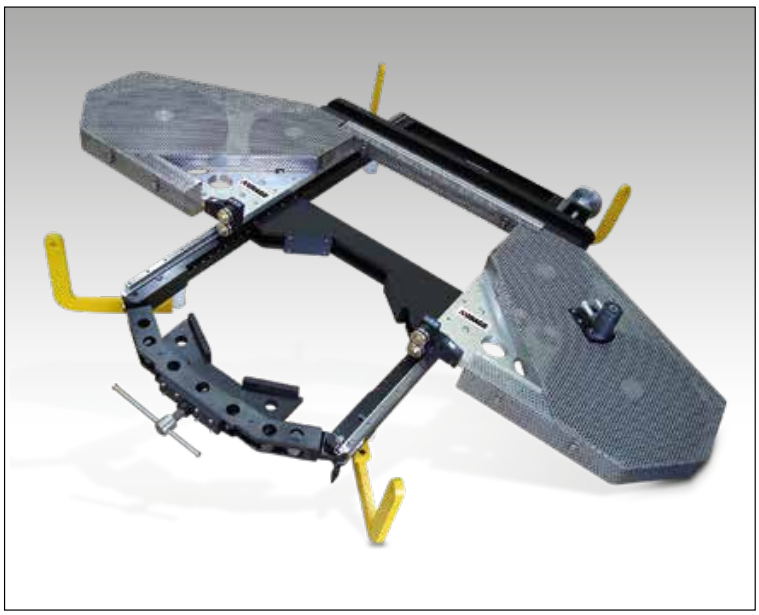

BS
Series

Cutting Diameters:
9 - 36" / 228 - 914 mm

On-site Band Saws

Hydraulically powered portable band saws designed for tubular severance. Designed primarily for topside use, but also suitable for subsea applications.

Applications
- Offshore platform decommissioning
- Conductors, caissons, piles
- Multiple grouted strings
- Subsea ROV-applications
- Subsea structures
- Pipes, casings and risers.

Items included with each machine:
- Band Saw blade (2-3TP carbide tipped)
- Toolkit
- Storage / shipping crate
- CE Certificate
- Packing list and manual.

Cutting the toughest materials in the most challenging environments

- **Fast, efficient and cost effective cold cutting**
- **Cuts grouted multiple casings**
- **Fast mounting system**
- **Vertical or parallel operation**
- **Fast clamping and set up**
- **Low height design for minimum clearances**
- **Extensive blade selection for all materials.**



▲ *Pipe cutting with BS portable band saw.*

▼ *Decommissioning job with band saw.*



On-site Band Saws

Cutting Diameters (Min. - Max.) (inch)	(mm)	Machine Model Number	Main Application	Hydraulic Drive Power
9 – 24	228 – 610	**BS924-H**	Topside	•
16– 36	406 – 914	**BS1636-H**	Topside	•

On-site Drilling & Tapping Machines

ENERPAC

Drilling Machines



HT20
- 4MT spindle accepts standard tooling
- Linear rails & guides provide accuracy and high load carrying capacity
- Direct spindle drive
- Manual and variable auto feed.



HT50
- ISO50 geared spindle
- Linear rails & guides provide accuracy and high load carrying capacity
- Geared reduction spindle drive
- Manual and variable auto feed.



HT40
- ISO40 geared spindle
- Linear rails & guides provide accuracy and high load carrying capacity
- Geared reduction spindle drive
- Manual and variable feed.

HT Series

Drilling Capability:
Up to 5" / 127 mm

Maximum Stroke:
11 - 17" / 279 - 432 mm

Drilling & Tapping

Make light work of the toughest drilling and tapping applications

Drilling and tapping projects on-site require powerful and stable machines that deliver precise results first time.
Our machines are designed to do exactly this - giving you reassurance that the job will be done efficiently and to the right specification. They offer high torque and easy operation through their heavy-duty spindles with ISO standard tapers.

Optional switch magnet mounts and chain clamps are also available for a quick and easy setup.
For large scale offshore decommissioning projects, casing pin drills provide an effective solution for creating lift holes into casings - especially in the most challenging of working environments.

Applications
- Drilling through armour plate
- Bulkhead hole cutting
- Flange stud drilling
- Flange stud re-threading
- Motor pump stud removal
- Short stroke line boring
- Turbine case stud removal
- Turbine pill drilling
- Casing pin drilling.

▼ *HT40 portable drilling machine.*



Drilling Machines

Maximum Diameter with Standard Drills		Maximum Standard Stroke		Machine Model Number	Drive Power Options	
(inch)	(mm)	(inch)	(mm)		Pneumatic	Hydraulic
2	50,8	11	279	**HT20**	•	•
4	101,6	16	406	**HT40**	•	•
5	127,0	17	432	**HT50**	•	•

Tel: +45 63 12 83 00 | Email: ps@hymatik.com | www.hymatik.com | Hvidkaervej 27a, DK-5250 Odense SV, Denmark

On-site Drilling & Tapping Machines

Tapping Machines



T30
- Rigid 3 pillar construction
- Quick key hole mounting
- Capable of tapping blind and through holes
- High torque reduction drive
- Hydraulic drive
- Pressure relief self feed system.



T725
- Heavy duty 4 pillar construction
- Quick key hole mounting system
- Capable of tapping blind and through holes
- High torque reduction drive
- Hydraulic drive
- Pressure relief self feed system.

T, DDU Series

Tapping Capability:
Up to 7¼" / 184 mm

Case Pin Drilling Diameter:
Up to 12" / 305 mm

Maximum Stroke:
12 - 16" / 305 - 406 mm



GeniSYS IV CNC Mill

Ideal for removal of cracked or broken studs and refurbishment of damaged threads. For hole diameters up to 11 inch and maximum 15.1 inch depths.

Page: 390

Casing Pin Drilling Machine



DDU1636
- Efficient pin drilling cold cut method
- Horseshoe mount options
- Helical drive spindle
- 4 inch (102 mm) cutter assembly supplied as standard
- Alternative cutter kits available up to 12 inch (305 mm).

Included as Standard with Each Machine

- Toolkit
- All required mounting legs and connections
- Storage/shipping box
- CE certificate
- Operator's Manual.
- Packing list.

Tapping & Casing Pin Drilling Machines

Maximum Diameter with Standard Drills		Maximum Standard Stroke		Casing Pin Drill Clamping Diameter		Machine Model Number	Drive Power Options	
(inch)	(mm)	(inch)	(mm)	(inch)	(mm)		Pneumatic	Hydraulic
3	76	12	305	–	–	**T30**	•	•
7¼	184	13	330	–	–	**T725**	•	•
12	305	16	406	9 – 24	228 – 609	**DDU924**		•
12	305	16	406	16 – 36	406 – 914	**DDU1636**		•

▼ *DDU1636 casing pin drilling.*



GeniSYS™ IV On-site CNC Mill

ENERPAC

▼ GeniSYS™ IV CNC Mill

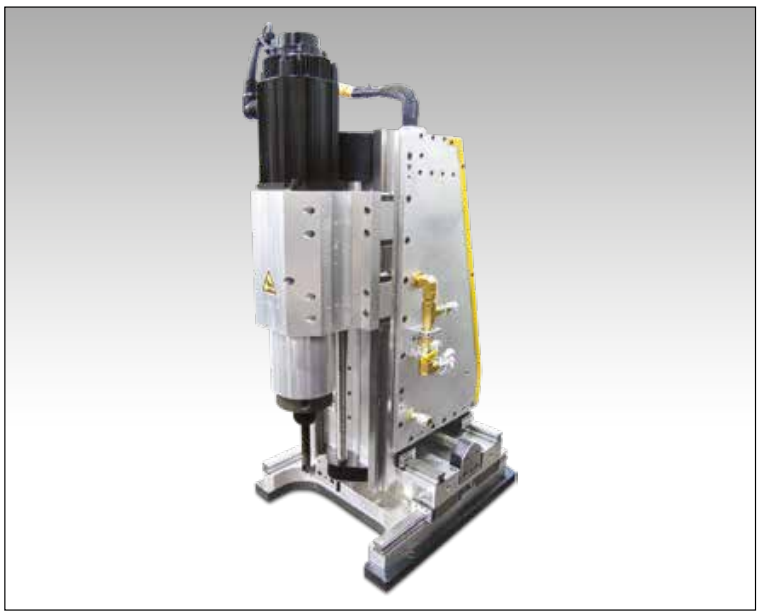

Removal of cracked or broken studs, refurbishment of damaged threads

- **CNC software allows the geniSYS to be programmed to perform multiple tasks within its working envelope**
- **Can create bore and thread hole diameters ranging from 22,2 mm – 279,4 mm (0.875 – 11 inches)**
- **Hole depths up to 384 mm (15.12 inches)**
- **High tolerance profile rails produce consistent results**
- **All three axes utilize precision ground ball screws, providing precise movement of the milling head**
- **Accurate and repeatable machining**
- **A cold cutting operation**
- **Ejects chips during operation**
- **Single machine capable of drilling, threading and general milling applications.**

GeniSYS IV On-site CNC Mill

The GeniSYS™ IV is a highly portable 3-axis CNC milling machine.
The motion control command center provides the ultimate in performance monitoring and technician safety.

Designed for the accurate removal of cracked or broken studs up to 11 inch diameter and the precise refurbishment of damaged threads. This is achieved without the need for manually controlled drilling or metal disintegration techniques.

Can be used for automated general profile milling applications.

Typical examples

- Manway covers
- Reactor studs
- Bolt extraction and threading applications
- Recirculation pumps
- Turbine cases
- Heat exchangers
- Motor bases and many more high impact assets.

▼ *Thread cutting*



▼ *GeniSYS IV CNC Milling Machine.*



GeniSYS™ IV On-site 3-axis CNC Milling Machine

GeniSYS

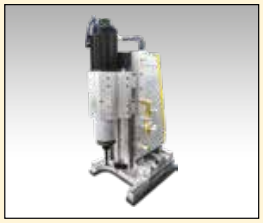

Hole Diameter:
⅞ - 11" / 22 - 279 mm

Hole Depths:
Up to 15.12" / 384 mm



▲ *A typical thread before refurbishment*



▲ *New machined thread*



▲ *Enlarging a hole*



▲ *Coring out the centre of a bolt (minor diameter).*

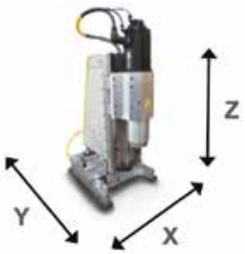

Included as Standard

The machine is supplied complete with the following items:

- GeniSYS IV milling machine
- Control System
- Laptop
- Motor and Cables
- Storage / Shipping Boxes
- Operator's Manual.

Tooling

Standard tooling packages available to support general milling and thread milling applications.

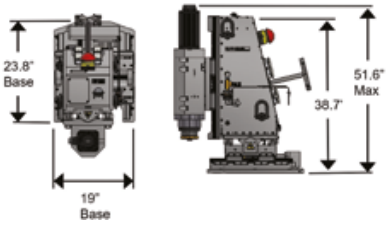

Dimensions GeniSYS IV

Base Length		Base Width		Total Height		Weight	
(inch)	(mm)	(inch)	(mm)	(inch)	(mm)	(lbs)	(kg)
23.8	605	19	483	51.6	1311	1100	499

Specifications GeniSYS IV 3-axis CNC Milling Machine

Hole Diameters (Min. - Max.)		Machine Model Number	Maximum Hole Depth		Milling Head Maximum Travel						Spindle Speed	Spindle Motor		Motor Voltage
					X-axis		Y-axis		Z-axis					
(inch)	(mm)		(inch)	(mm)	(inch)	(mm)	(inch)	(mm)	(inch)	(mm)	(RPM)	(hp)	(kW)	(Volt, 3 phase)
⅞ – 11	22,2 – 279,4	**GeniSYS IV**	15.12	384	8	203,2	8	203,2	17	431,8	3000	6.7	5,0	380 - 440

Tel: +45 63 12 83 00 | Email: ps@hymatik.com | www.hymatik.com | Hvidkaervej 27a, DK-5250 Odense SV, Denmark

MITT-Series, Inline Isolation & Test Tools

ENERPAC

▼ Shown: **MITT6A, MITT16A, MITT2A, MITT1A Isolation & Test Tools**



Ultimate Versatility in Piping Isolation and Pressure Testing

- **Combination Isolation and Test Tool assures vapor-free isolation for hot work and high-pressure capability between seals for testing welds with one tool**
- **Multi-schedule capability – up to 6 schedules covered per tool, 40 tools cover 154 pipe diameter / schedule combinations**
- **Lightweight, slim and versatile design – no crane required, able to mount in elbows and tees, able to test mismatched schedules**
- **High-pressure capability – test welds with relative ease up to 310 bar**
- **Self-centering tools are user-friendly and require minimal training**
- **Hydrodynamic capability for heat treating.**

Inline Isolation & Test Tools

MITT series tools obsolete traditional pipe cleaning and hydrotesting methods used for maintenance and construction operations.

Improve operator safety and reduce system downtime by eliminating cleaning requirements and limiting test pressure volume.

The MITT series tools improve safety by limiting the test pressure volume and reduce downtime by eliminating cleaning requirements.

Key benefits of the tools include:

- Significantly reduce maintenance project timelines
- Safely perform welding on hydrocarbon lines with the peace of mind of a positive pressurized hydrostatic isolation
- Achieve significant reduction in wastewater (<1,0 litres of water required for a 24 inch test)
- Patent Pending.

MITT Isolation / Vapor Barrier Arrangement

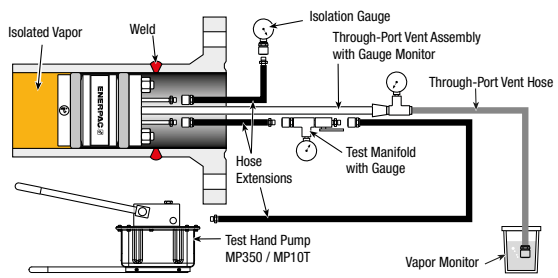

MITT Isolation Pressure Test Arrangement

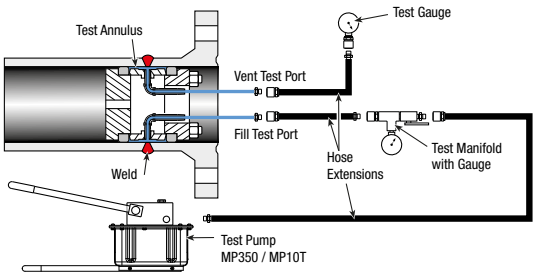

Tel: +45 63 12 83 00 | Email: ps@hymatik.com | www.hymatik.com | Hvidkaervej 27a, DK-5250 Odense SV, Denmark

Inline Isolation & Test Tools

Nominal Pipe Diameter (inch)	Model Number	Pipe Schedules Covered	Max. Tool Pressure Rating (bar)	Tool Body Diameter (mm)	Overall Length (mm)	Stud, Nut, Washer Size (inch)	Pressure Port Size (ASME NPT)	(kg)
¾	MITT075A	5, 10, STD/40	310	18	356	1/8"	Female 1/8"	0,7
	MITT075B	XS/80, 160	310	15	356	1/8"	Female 1/8"	0,7
1	MITT1A	5, 10, STD/40	310	23	356	1/8"	Female 1/8"	0,9
	MITT1B	XS/80, 160	310	18	356	1/8"	Female 1/8"	0,7
1¼	MITT125A	5, 10, STD/40 XS/80	310	29	356	¼"	Female 1/4"	1,3
1½	MITT150A	5,10, XS/80	310	35	356	¼"	Female 1/4"	1,9
	MITT150B	160	310	28	356	¼"	Female 1/4"	1,5
2	MITT2A	5,10, STD/40, XS/80	310	46	356	¼"	Female 1/4"	2,4
	MITT2B	160, XXS	310	37	356	¼"	Female 1/4"	2,0
3	MITT3A	5,10, STD/40, XS/80	310	71	178	3/8"	Male 1/8"	2,3
	MITT3B	160, XXS	310	57	178	3/8"	Male 1/8"	2,0
4	MITT4A	5,10, STD/40, 60, XS/80	310	94	178	5/16"	Male 1/8"	2,5
	MITT4B	120, 160	310	81	178	5/16"	Male 1/8"	2,2
	MITT4C	XXS	310	77	178	5/16"	Male 1/8"	1,9
6	MITT6A	10 , STD/40, 60	310	145	178	5/8"	Male 1/4"	5,9
	MITT6B	XS / 80, 120	310	137	178	5/8"	Male 1/4"	5,4
	MITT6C	160, XXS	310	122	178	5/8"	Male 1/4"	4,5
8	MITT8A	10, 20, 30, STD/40, XS/80	310	189	178	5/8"	Male 1/4"	8,6
	MITT8B	100, 120, 140, XXS, 160	310	168	178	5/8"	Male 1/4"	7,3
10	MITT10A	20, 30, STD/40, XS/60, 80	310	238	178	5/8"	Male 1/4"	13,2
	MITT10B	100, 120, XXS/140, 160	310	213	178	5/8"	Male 1/4"	11,3
12	MITT12A	10, 20, 30, STD, 40, XS	310	294	178	5/8"	Male 1/4"	19,5
	MITT12B	60, 80, 100, XXS/120	310	272	178	5/8"	Male 1/4"	18,6
	MITT12C	140, 160	310	248	178	5/8"	Male 1/4"	14,5
14	MITT14A	10, 20, STD/30, 40	310	324	178	5/8"	Male 1/4"	20,4
	MITT14B	XS, 60, 80	310	324	178	5/8"	Male 1/4"	19,1
	MITT14C	100, 120, 140, 160	310	283	178	5/8"	Male 1/4"	17,2
16	MITT16A	10, 20, STD/30, XS/40, 60	310	372	178	5/8"	Male 1/4"	24,5
	MITT16B	80, 100	310	344	178	5/8"	Male 1/4"	21,8
	MITT16C	120, 140, 160	310	324	178	5/8"	Male 1/4"	20,4
18	MITT18A	10, 20, STD, 30, XS, 40	310	419	178	5/8"	Male 1/4"	29,0
	MITT18B	60, 80	310	400	178	5/8"	Male 1/4"	27,2
	MITT18C	100, 120	310	378	178	5/8"	Male 1/4"	24,9
	MITT18D	140, 160	310	357	178	5/8"	Male 1/4"	23,6
20	MITT20A	10, STD/20, XS / 30	310	480	178	5/8"	Male 1/4"	36,3
	MITT20B	40, 60	310	457	178	5/8"	Male 1/4"	33,1
	MITT20C	80, 100	310	433	178	5/8"	Male 1/4"	30,4
	MITT20D	120, 140	310	410	178	5/8"	Male 1/4"	27,7
	MITT20E	160	310	399	178	5/8"	Male 1/4"	27,2
22	MITT22A	STD, XS	310	524	178	5/8"	Male 1/4"	40,4
	MITT22B	60, 80	310	492	178	5/8"	Male 1/4"	36,7
	MITT22C	100, 120	310	467	178	5/8"	Male 1/4"	34,0
	MITT22D	140, 160	310	441	178	5/8"	Male 1/4"	31,3
24	MITT24A	10, STD/20, XS, 30	79	575	178	5/8"	Male 1/4"	44,9
	MITT24B	40, 60	155	551	178	5/8"	Male 1/4"	42,6
	MITT24C	80, 100	232	522	178	5/8"	Male 1/4"	39,9
	MITT24D	120, 140	310	495	178	5/8"	Male 1/4"	37,2
	MITT24E	160	310	480	178	5/8"	Male 1/4"	36,3
26	MITT26A	10, STD, XS	79	626	178	5/8"	Male 1/4"	52,2
30	MITT30A	10, STD, XS/20, 30	79	727	178	5/8"	Male 1/4"	66,7
	MITT30B	40	79	714	178	5/8"	Male 1/4"	63,5
32	MITT32A	10, STD, XS/20, 30	79	778	178	5/8"	Male 1/4"	71,7
	MITT32B	40	79	768	178	5/8"	Male 1/4"	70,3
34	MITT34A	10, STD, XS/20, 30	29	829	178	5/8"	Male 1/4"	76,2
	MITT34B	40	29	819	178	5/8"	Male 1/4"	74,8
36	MITT36A	10, STD, XS	29	879	178	5/8"	Male 1/4"	84,8
38	MITT38A	STD, XS	29	930	178	5/8"	Male 1/4"	94,3
40	MITT40A	STD, XS	29	981	178	5/8"	Male 1/4"	104,3

MITT Series



Pipe Diameters:
¾ - 40 inch

Water Capacity per Test:
0,4 - 3,0 litres

Maximum Test Pressure:
310 bar



Cost-Effective Spares

Buna 90 shore hardness seals and stainless steel seal backing rings provide additional pressure capacity for a low cost.



Ancillary Kit – MITTAK

All ancillary components required to safely isolate piping and test new welds (includes manual valves, gauge set, hoses, hand tools, fittings).



Pump and Reservoir

To match the full capability of the tools, the **MP350** hand pump and **MP10T** reservoir are recommended.

▼ *MITT2A tool being torqued in a test stand for high pressure testing.*



Yellow Pages

ENERPAC

Enerpac 'Yellow Pages' stand for Hydraulic Information!

If selecting hydraulic equipment is not your daily routine, then you will appreciate these pages. The 'Yellow Pages' are designed to help you work with hydraulics. They will help you to better understand the basics of hydraulics, of system set-ups and of the most commonly used hydraulic techniques. The better your choice of equipment, the better you will appreciate hydraulics. Take the time to go through these 'Yellow Pages' and you will benefit even more from Enerpac High Pressure Hydraulics.

ENERPAC WARRANTY STATEMENT

Visit our website for the complete Global Lifetime Warranty or call your Authorized Service Center.

Learn more about hydraulics

Visit **www.enerpac.com** to learn more about hydraulics and system set-ups.

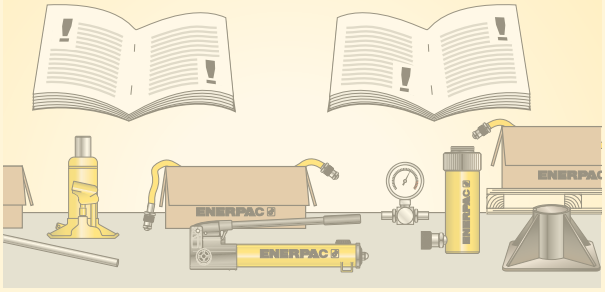

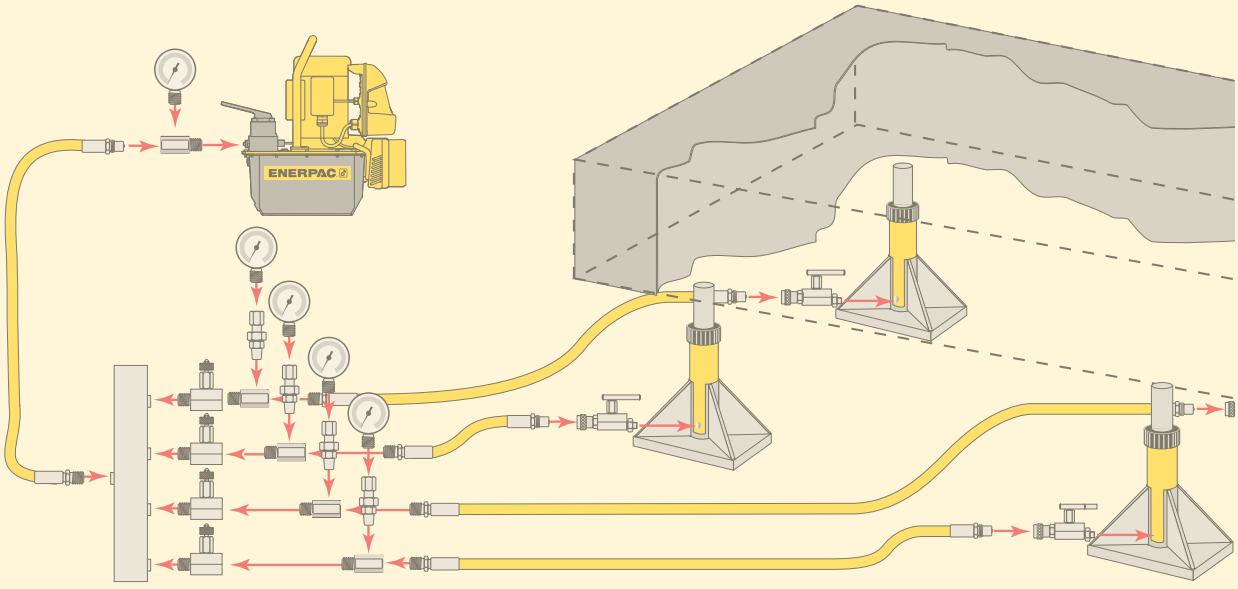

Yellow Pages Section Overview

Section		Page
Safety Instructions		396 ▶
Pump Selection		398 ▶
Selection Worksheet		399 ▶
Basic System Set-ups	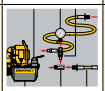	400 ▶
Basic Hydraulics		402 ▶
Conversion Tables		404 ▶
Cylinder Speed Charts		405 ▶
Valve Information	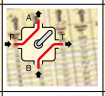	406 ▶
Hexagon Bolt and Nut Sizes		407 ▶
Torque Tightening	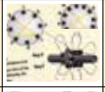	408 ▶
Tensioning		410 ▶
INFORMATE Bolting Integrity Software		412 ▶
Enerpac Academy		414 ▶
Enerpac Maintenance Program (EMP)		415 ▶

ISO 9001 REGISTERED
ENERPAC, 720 W. James St., Columbus, WI 53925 USA

Enerpac is certified for several quality standards. These standards require compliance with standards for management, administration, product development and manufacturing. Enerpac worked hard to earn the quality rating ISO 9001, in its ongoing pursuit of excellence.

DIN-ISO 1402
Enerpac Thermoplastic and Rubber Hoses have been tested and confirm to this Standard.

ASME B30.1-2015
Our cylinders fully comply with the criteria set forth by the American National Standards Institute (except RD, BRD, HCL, LPL, CUSP and JHA-Series).

Product Design Criteria
All hydraulic components are designed and tested to be safe for use at max. 700 bar (10.000 psi) pressure unless otherwise specifically noted.

Where specified, Enerpac electric power units meet the design, assembly and test requirements of the Standards Council of Canada (CAN C22.2 No. 68-92), and UL73 for the United States. Units were tested and certified for both USA and Canada by TÜV and by CSA, USA-OSHA-NRTLs., (Nationally Recognised Testing Laboratories).

EMC Directive
Where specified, Enerpac electric power pumps meet the requirements for Electromagnetic Compatibility per EMC Directive 2014/30/EU.

CE Marking & Conformity
Enerpac provides Declarations of Conformity or Incorporation, as applicable, and CE Marks for products according to the EU Directives.

ATEX 95 Certified
The S, W, DSX and HMT-Series torque wrenches, ZA, XA, LAT and ATP-Series air driven pumps, SWi-Ex-flange spreaders, HP-Ex hand pumps and the 144-type hoses are tested and certified to conform to the Directive 2014/34/EU "ATEX Directive".
The explosion protection is for Equipment Group II, Equipment Category 2 (Hazardous Zone Area 1) in Gas and/or Dust atmospheres.

S, W-wrenches:	**Ex II 2 GD T4**
DSX, HMT-wrenches:	**Ex II 2 G c T6**
NSH-Nut Splitters:	**Ex II 2 G c T6**
ZA4, ZA4T-Air Pumps:	**Ex II 2 GD ck T4**
ZA4TX-QR0P-Pump:	**Ex IIC T4 Gc** **Ex IIIC T135°C Dc**
ATP, XA-Air Pumps:	**Ex II 2 GD ck T4**
LAT-Air Pumps:	**Ex IIC T4 Gc** and **Ex IIIC T135°C Dc**
SWi-Ex Spreaders:	**II 2G Ex h IIB T5 Gb** and **II 2D Ex h IIIC T85°C Db**
HP-Ex Hand Pumps:	**II 2G Ex h IIB T5 Gb** and **II 2D Ex h IIIC T100°C Db**
144-Hoses:	**II 2G Ex h IIB T5 Gb** and **II 2D Ex h IIIC T100°C Db**

Safety Instructions

ENERPAC



When used correctly, hydraulic power is one of the safest methods of applying force to your work. And to that end we offer some DO's and DON'Ts, simple common sense points which apply to practically all Enerpac hydraulic products.

- **Lift slowly and check the load often**
- **Avoid standing in the line of force**
- **Anticipate possible problems and take steps to avoid them.**

The line drawings and application photo's of Enerpac products throughout this catalog are used to portray how some of our customers have used hydraulics in industry.

In designing similar systems, care must be taken to select the proper components that provide safe operation and fit your needs.

Check to see if all safety measures have been taken to avoid the risk of injury and property damage from your application or system.

Enerpac can not be held responsible for damage or injury, caused by unsafe use, maintenance or application of its products.

Please contact the Enerpac office or a representative for guidance when you are in doubt as to the proper safety precautions to be taken in designing and setting up your particular system.

In addition to these tips, every Enerpac product comes with instructions spelling out specific safety information. Please read them carefully.

Jacks

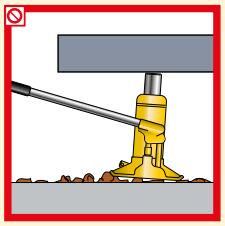

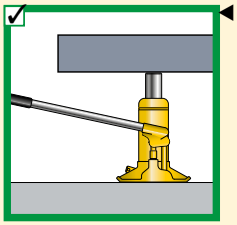

Provide a level and solid support for the entire jack base area.

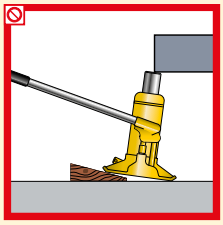

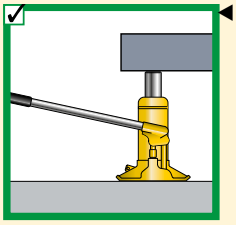

The entire jack saddle must be in contact with the load. Movement of the load to be in the same direction as jack plunger.





Never place any part of your body under the load. Ensure the load is on a solid support before venturing under.

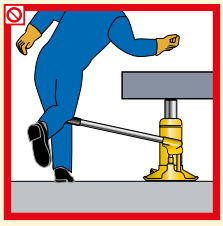

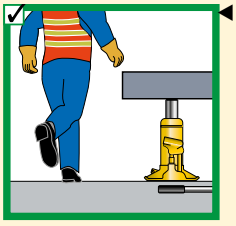

Remove the jack handle when it is not being used.

Cylinders

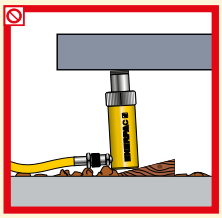

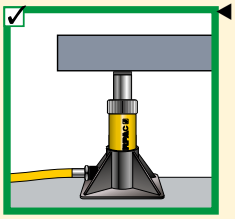

Provide a solid support for the entire cylinder base area. Use cylinder base attachment for more stability.

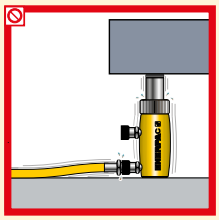

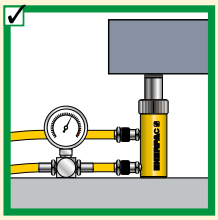

Both couplers must be connected when using double-acting cylinders. Ensure return hose is fitted.

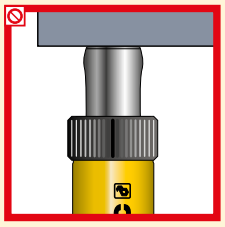

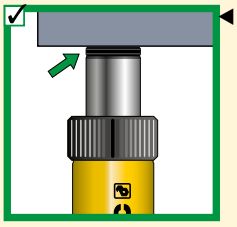

Do not use cylinder without saddle. This will cause plunger to "mushroom". Saddles distribute load evenly on the plunger.

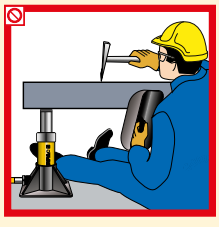



As with jacks, never place any part of your body under the load. Load must be on cribbing before venturing under.





Always protect cylinder threads for use with attachments.





Keep hydraulic equipment away from open fire and temperatures above 65 °C (150 °F).

Safety Instructions

General

**Manufacturer's rating of load and stroke are maximum safe limits.
Good practice encourages using only 80% of these ratings!**

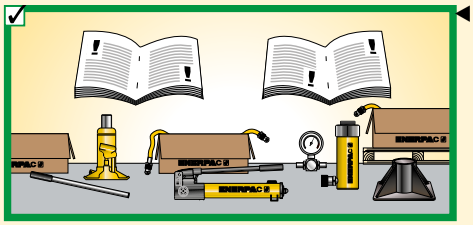

Always read instructions and safety warnings that come with your Enerpac hydraulic equipment.

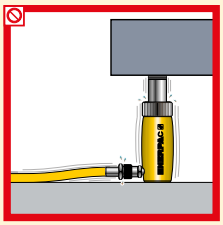

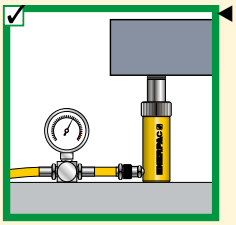

Don't override the factory setting of relief valves. Always use a gauge to check system pressure.

Pumps

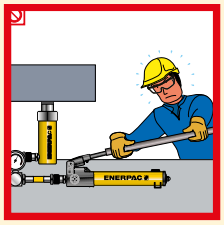

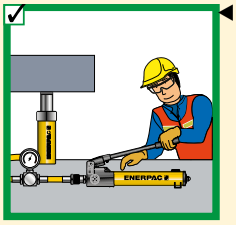

Don't use handle extenders. Hand pumps should be easy to operate when used correctly.

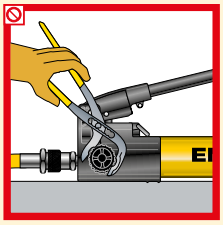

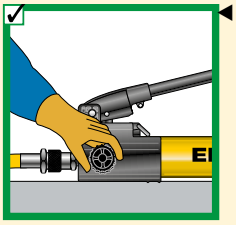

Close release valve finger tight. Using force will ruin the valve.

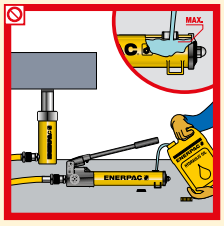

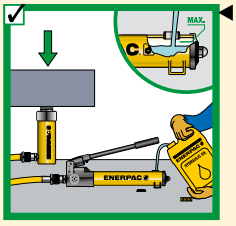

Fill pump only to recommended level. Fill only when connected cylinder is fully retracted.

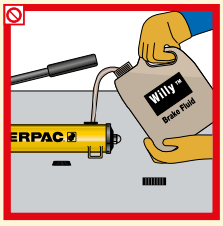

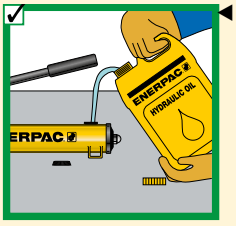

Use only genuine Enerpac hydraulic oil. Wrong fluid can destroy seals and pump and will render your warranty null and void your guarantee.

Hoses and couplers

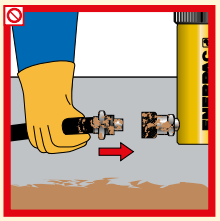

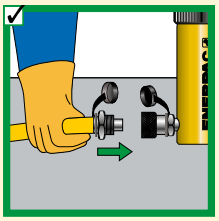

Clean both coupler parts before connecting. Use dust caps when coupler parts are not connected.

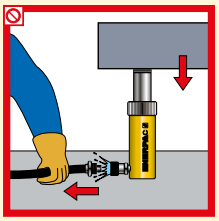

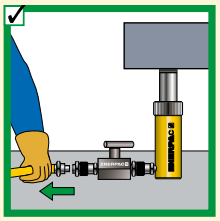

Detach cylinder only when fully retracted or use shut-off valves or safety valves to lock-in cylinder pressure.

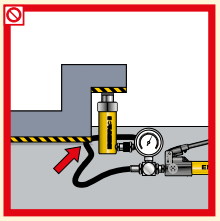

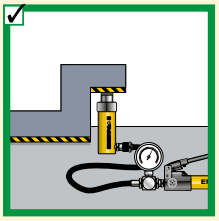

Keep hoses away from the area beneath loads.

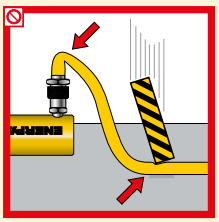

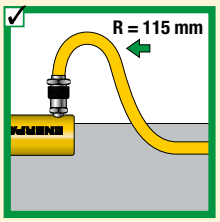

Don't kink hoses. Bending radius should be at least 115 millimetres. Don't drive over or drop heavy objects on hoses.

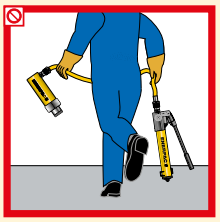

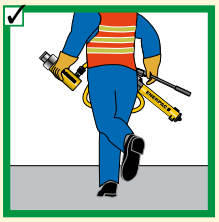

Don't lift hydraulic equipment by the hoses.

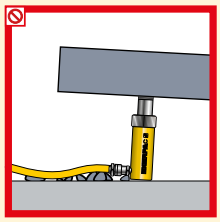

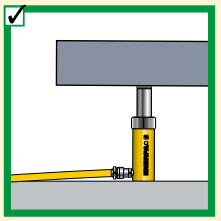

Never allow the cylinder to be lifted off of the ground through the couplers.

Pump Selection

ENERPAC

▼ HAND PUMP AND SINGLE-ACTING CYLINDER MATCHING CHART

Capacity (ton) ▶ / ▼ Stroke	5 t	10 t	15 t	25 t	30 t	50 t	60 t	75 t	100 t	150 t
< 25 mm										
25 mm										
50 mm										
75 mm										
100 mm										
125 mm										
150 mm										
175 mm										
200 mm										
225 mm										
250 mm										
300 mm										
325 mm										
350 mm										
	 P392 Page: 76			 P80 Page: 78		 P462 Page: 78				

Note: Selection based on oil capacity requirements of cylinders.

▼ POWER PUMP SELECTION CHART

Oil Flow *	Low Oil Flow (0,1 - 0,3 l/min)		Medium Oil Flow (0,5 -2,0 l/min)		High Oil Flow (2,0 - 4,2 l/min)	
Oil Capacity	1,9 - 3,8 litres	3,0 litres	4,6 - 39 litres	4,6 - 39 litres	9,8 - 39 litres	9, 20, 135 litres
Duty Cycle **	Intermittent	Extended	Intermittent	Extended	Extended	Extended
Portability ***	Portable	Portable	Portable	Stationary	Stationary	Stationary
Recommended Series	**PU-Series Economy**	**E-Series E-Pulse®**	**ZU4-Series**	**ZE3-, ZE4- and ZE5-Series**	**ZE6-Series**	**SFP-Series Split-Flow**
						
	Page: 90	Page: 94	Page: 98	Page: 104	Page: 104	Page: 336

*** Oil Flow**

- Determined by motor size
- Directly affects electrical power requirements
- Determines cylinder or tool speed

**** Duty Cycle**

- Extended applications require more than one hour of uninterrupted pump use
- Intermittent would be used less than one hour, depending on reservoir capacity.

***** Portability**

Portable
- Ergonomic handles
- Flexible power requirements

Stationary
- Mounting options
- Normally requires stable power

Selection Worksheet

▼ **Complete the following information to select the right products:**

Cylinder Selection

Question:	*Tips/help*	*Data*	*Model Number*
Total force required (ton):	Total load		
Number of cylinders required:	Number of lifting points		
Force per cylinder (ton):	Should be 80% of total cylinder capacity		
Stroke required:	Plunger travel		
Single or double-acting (D/A):	D/A used when pull force is required, or retract speed is critical		
Type of plunger required:	Hollow or solid		
Collapsed height required:			
Optional saddle required:	Tilt, Grooved, Flat		
Cylinder base:	Improves stability		
Cylinder attachments: (RC-series)	Expanded functions		
Selected cylinder model:		▶	
Including coupler model:			

Pump Selection

The three most commonly selected pumps are hand pumps, electric pumps and air-driven pumps. Gas powered pumps, however can be selected in the same way.

Available power source: ☐ **Manual** ☐ **Battery** ☐ **Electric** ☐ **Compressed Air** ☐ **Petrol**

Hand Pump	Not for high cycle applications		
Single- or double-acting operation	Use 4-way valve for D/A applications		
	Check speed chart on page 405 for number of mm per stroke)		
Selected Hand Pump:		▶	
Electric or Compressed Air Pump			
Need for portability:			
Duty cycle:	Intermittent or extended		
Required useable oil capacity:	Intermittent = 1,2 x oil capacity		
	high cycle = 2 x oil capacity		
Available Voltage:			
Lifting speed (Important/not important):	Use speed chart on page 405		
Type of control:	Manual / remote pendant		
Type of actuation/function:	Advance / Hold / Retract		
Accessories:	Filter Kit, Level Switch, Roll Bar ...		
Selected Pump:		▶	
Including Coupler:	Oil connection		

System Components

Number of hoses and length required:			
Selected Hoses:		▶	
Manifold or Tee-fitting:		▶	
Extra hose per manifold (2):		▶	
Gauge (kN or bar scale):	GF-series glycerine filled for high cycle	▶	
Gauge Adapter:		▶	
Fittings:		▶	
Pressure Relief Safety Valve:		▶	
Load-holding Valve(s):		▶	
Hydraulic Oil:		▶	

Tel: +45 63 12 83 00 | Email: ps@hymatik.com | www.hymatik.com | Hvidkaervej 27a, DK-5250 Odense SV, Denmark

Basic System Set-ups

ENERPAC

1 Cylinder
Applies hydraulic force.
Page 5

2 Cylinder Base Plate
For applications like lifting where additional cylinder stability is required.
Page 10

3 Pump
Provides hydraulic flow.
Page 75

4 Hose
Transports hydraulic fluid.
Page 128-129

5 Male Coupler
For quick connection of the hose to system components.
Page 130-131

6 Female Coupler
For quick connection of the hose end to the system components.
Page 130-131

7 Gauge
To monitor pressure of the hydraulic circuit.
Page 136-142

8 Gauge Adaptor
For quick and easy gauge installation.
Page 142-143

9 Swivel Connector
Allows proper alignment of valves and/or gauges. Used when units being connected cannot be rotated.
Page 143

10 Auto-Damper Valve V10
Used to protect gauge from damage due to sudden pressure pulses in the system. Needs no adjustment and allows correct positioning of gauge, prior to tightening.
Page 144-145

11 4-Way Directional Control Valve
Controls the direction of hydraulic fluid in a double-acting system.
Page 122-123

Single-acting push application, such as in a press.
The hand pump offers controlled cylinder advance, but may require many hand pump strokes in longer stroke applications when the cylinder capacity is 25 ton or above.

Examples of pump, hose and cylinder sets can be found on **pages 62-65**.

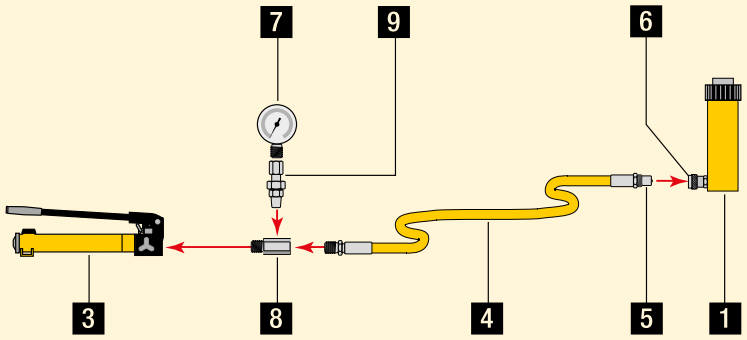

Single-acting cylinder with longer stroke used for lifting applications.

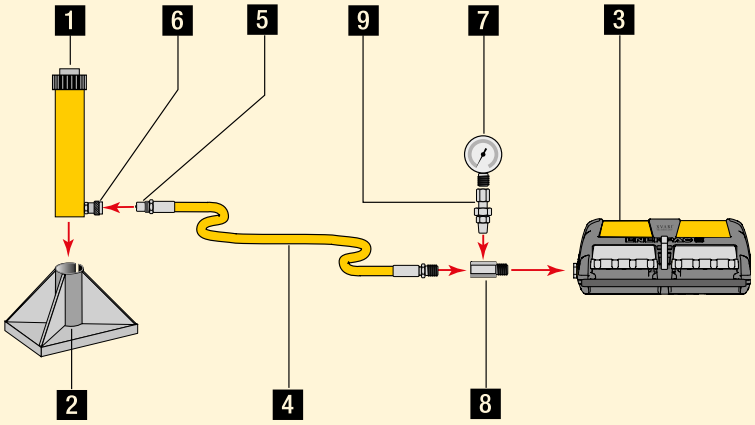

Double-acting cylinder set-up used for lifting applications where a slow controlled descent of the load must be maintained.

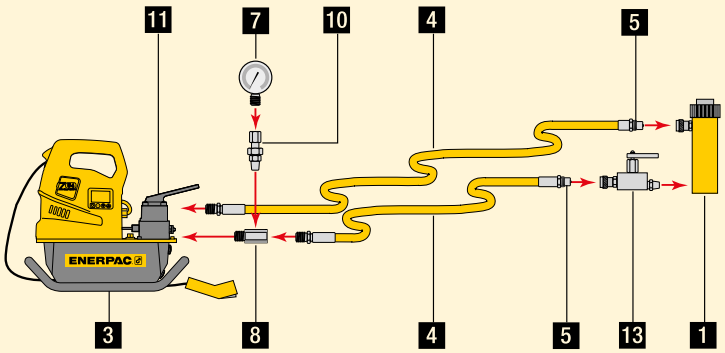

Basic System Set-ups

Double-acting cylinder set-up used in a push/pull application.

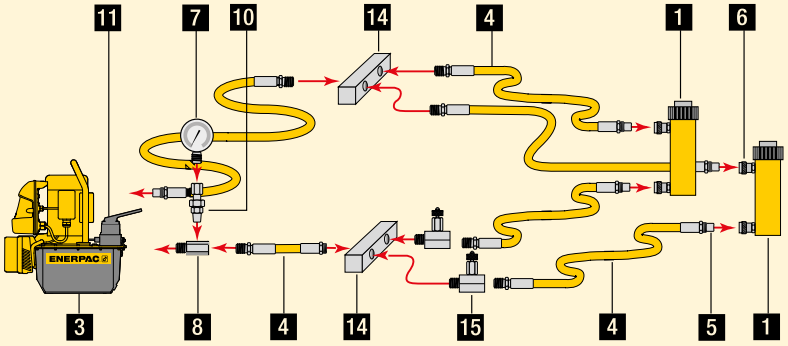

Two point lifting set-up using single-acting cylinders.

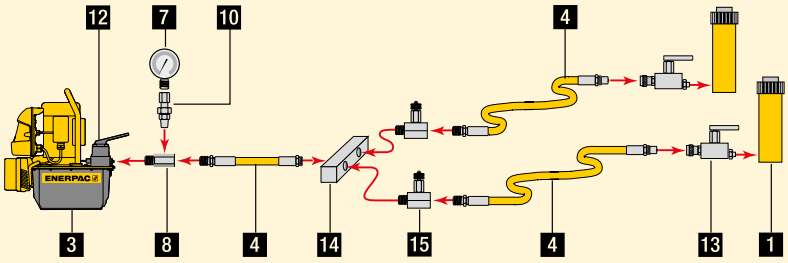

Four point lifting set-up, using single-acting cylinders and directional control valves.

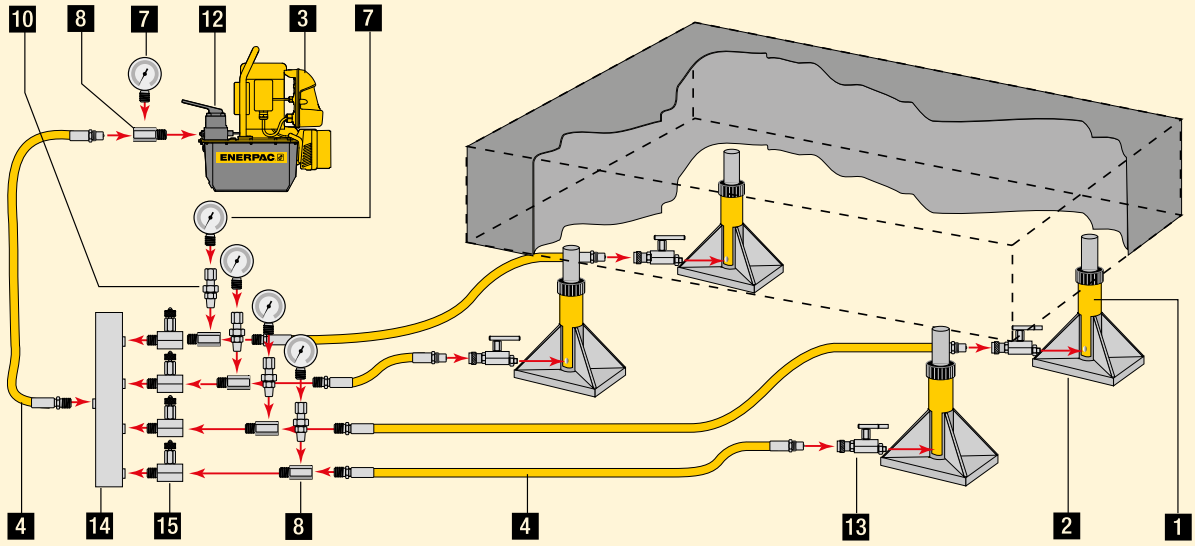

12 3-Way Directional Control Valve
Controls the direction of hydraulic fluid in a single-acting system.
Page 122-123

13 Safety Holding Valve V66
Controls load descent in lifting applications.
Page 144-145

14 Manifold
Allows distribution of hydraulic fluid from one power source to several cylinders.
Page 132-135

15 Needle valves V82 and V182
Regulates the flow of hydraulic fluid to or from the cylinders.
Page 144-145

www.enerpac.com
Visit our web site to learn more about hydraulics and system set-ups.

Tel: +45 63 12 83 00 | Email: ps@hymatik.com | www.hymatik.com | Hvidkaervej 27a, DK-5250 Odense SV, Denmark

Basic Hydraulics

ENERPAC

Flow

A hydraulic pump produces flow.

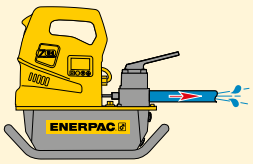

Pressure

Pressure occurs when there is resistance to flow.

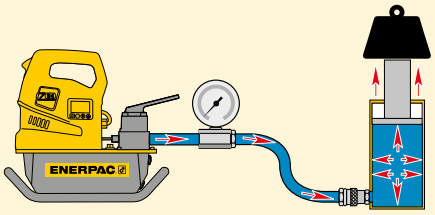

Pascal's Law

Pressure applied at any point upon a confined liquid is transmitted undiminished in all directions (Fig.1). This means that when more than one hydraulic cylinder is being used, each cylinder will lift at its own rate, depending on the force required to move the load at that point (Fig. 2).

Cylinders with the lightest load will move first, and cylinders with the heaviest load will move last (Load A), as long as the cylinders have the same capacity.

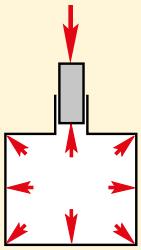

Figure 1

To have all cylinders operate uniformly so that the load is being lifted at the same rate at each point, either control valves (see Valve section) or Synchronous Lift System components (see section Heavy Lifting Technology) must be added to the system (Load B).

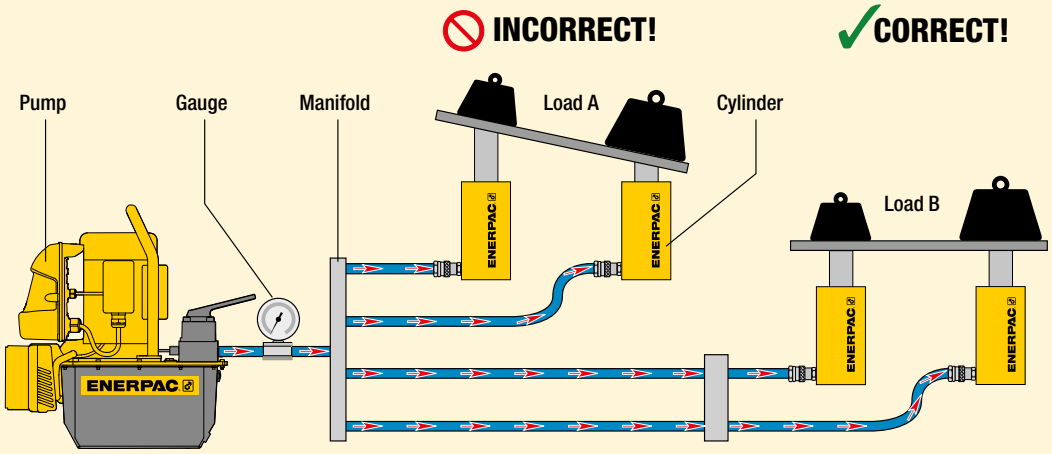

Figure 2

Synchronous Lift or Control Valves to provide uniform lifting of load.

CAUTION!
When lifting or pressing, always use a gauge.

A gauge is your 'window' to the system. It lets you see what's going on.

You will find the gauges in the System Components section.

Page: 127

Learn more about hydraulics

Visit **www.enerpac.com** to learn more about hydraulics and system set-ups.

Basic Hydraulics

Force

The amount of force a hydraulic cylinder can generate is equal to the hydraulic pressure times the "effective area" of the cylinder (see cylinder selection charts).

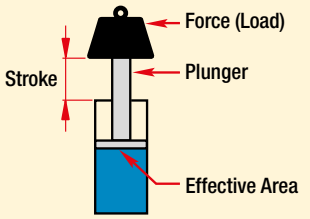

Force	=	Hydraulic Working Pressure	x	Cylinder Effective Area
F	=	P	x	A

Use this formula to determine either force, pressure or effective area if two of the variables are known.

Example 1
An RC106 cylinder with 14,5 cm^2 effective area operating at 700 bar * will generate what force?
Force = 7000 N/cm^2 x 14,5 cm^2 = 101500 N = 101,5 kN

* Note: 700 bar = 700 x 10^5 N/mm^2 = 7000 N/cm^2.

Example 2
An RC106 cylinder lifting 7000 kg will require what pressure?
Pressure = 7000 x 9,8 N ÷ 14,5 cm^2 = 4731,0 N/cm^2 = 473 bar.

Example 3
An RC256 cylinder is required to produce a force of 190.000 N. What pressure is required?
Pressure = 190.000 N ÷ 33,2 cm^2 = 5722,9 N/cm^2 = 572 bar.

Example 4
Four RC308 cylinders are required to produce a force of 800.000 N.
What pressure is required?
Pressure = 800.000 N ÷ (4 x 42,1 cm^2) = 4750,6 N/cm^2 = 476 bar.
Remember, since four cylinders are used together, the area for one cylinder must be multiplied by the number of cylinders used.

Example 5
A HCL2506 cylinder is going to be used with a power source that is capable of 500 bar. What is the theoretical force available from that cylinder?
Force = 5000 N/cm^2 x 363,1 cm^2 = 1.815.500 N = 1815 kN.

Cylinder Oil Capacity

The volume of oil required for a cylinder (cylinder oil capacity) is equal to the effective area of the cylinder times the stroke*.

Cylinder Oil Capacity	=	Cylinder Effective Area	x	Cylinder Stroke

* Note: these are theoretical examples and do not take into account the compressibility of oil under high pressure.

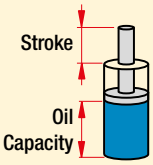

Example 1:
An RC158 cylinder with 20,3 cm^2 effective area and 200 mm stroke requires what volume of oil?
Oil Capacity = 20,3 cm^2 x 20 cm = 406 cm^3

Example 2:
An RC5013 cylinder has an effective area of 71,2 cm^2 and a stroke of 320 mm. How much oil will be required?
Oil Capacity = 71,2 cm^2 x 32 cm = 2278,4 cm^3

Example 3:
An RC10010 cylinder has an effective area of 133,3 cm^2 and a stroke of 260 mm. How much oil will it require?
Oil Capacity = 133,3 cm^2 x 26 cm = 3466 cm^3

Example 4:
Four RC308 cylinders are being used, each with an effective area of 42,1 cm^2 and a stroke of 209 mm. How much oil will be required?
Oil Capacity = 42,1 cm^2 x 20,9 cm = 880 cm^3 for one cylinder
Multiply by four to obtain the required capacity: 3520 cm^3

CAUTION!
Enerpac oil will compress 2,28% at 350 bar and 4,1% at 700 bar.

Page: 132

Conversion Tables

ENERPAC

Key to cylinder dimensions

Dimensions shown in the Selection Charts of the cylinder section are identified on the relevant drawings by the capital letter references listed here: A for collapsed height through Z1 for depth of internal base thread.

A = Collapsed height
B = Extended height
C = Cylinder body length
D = Cylinder outside diameter
D1 = Cylinder width
E = Cylinder inside diameter
F = Plunger rod diameter
G = Oil inlet thread
H = Cylinder bottom to advance port
I = Cylinder top to retract port
J = Saddle outside diameter
K = Cylinder rod protrusion at collapsed height
L = Plunger centre to side of base
M = Mounting holes to plunger centre
N = Length of smaller cylinder part
O = Plunger hole or thread of saddle
P = Plunger thread length
Q = Plunger outside thread
U = Pitch (BC) of mounting holes
V = Thread of cylinder mounting holes
W = Collar thread
X = Collar thread length
Y = Centre hole diameter
Z = Internal base thread
Z1 = Depth of internal base thread

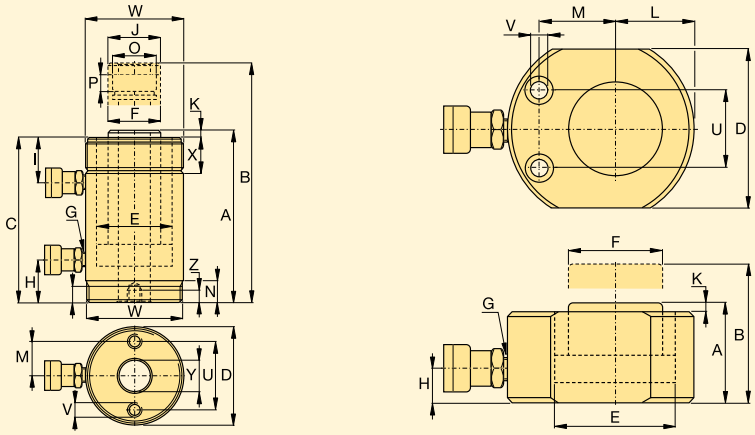

Key to measurements

All capacities and measurements in the catalogue are expressed in uniform values.

The conversion chart provides helpful information for their translation into equivalent systems.

All ton values specified in this catalogue are metric tonnes and are for cylinder class identification only.
Please refer to the kN data for calculations.

Free Conversion Calculator

Visit enerpac.com and download the free conversion calculator.

Pressure:

1 psi	= 0,069 bar
1 bar	= 14,50 psi
	= 9,8 N/cm^2
	= 100.000 Pa
1 kPa	= 0,145 psi
1 MPa	= 145 psi

Volume:

1 in^3	= 16,387 cm^3
1 cm^3	= 0,061 in^3
1 litre	= 61,02 in^3
	= 0,264 gal
1 USgal	= 3785 cm^3
	= 3,785 l
	= 231 in^3

Weight:

1 pound (lb)	= 0,4536 kg
1 kg	= 2,205 lbs
	= 9,806 N
1 metric ton	= 2205 lbs
	= 1000 kg
1 ton (short)	= 2000 lbs
	= 907,18 kg

Torque:

1 Nm	= 0,738 Ft.lbs
	= 0,102 kgf.m
1 Ft.lbs	= 1,356 Nm
	= 0,138 kgf.m

Temperature:
To Convert °C to °F:
$T^{\circ F} = (T_{\circ C} \times 1{,}8) + 32$

To Convert °F to °C:
$T^{\circ C} = (T_{\circ F} - 32) \div 1{,}8$

Other measurements:

1 in	= 25,4 mm
1 mm	= 0,039 in
1 in^2	= 6,452 cm^2
1 cm^2	= 0,155 in^2
1 hp	= 0,746 kW
1 kW	= 1,359 hp
1 kN	= 225 lbs

Imperial to metric

Inches	Decimal	mm
1/16	.06	1,59
1/8	.13	3,18
3/16	.19	4,76
1/4	.25	6,35
5/16	.31	7,94
3/8	.38	9,53
7/16	.44	11,11
1/2	.50	12,70
9/16	.56	14,29
5/8	.63	15,88
11/16	.69	17,46
3/4	.75	19,05
13/16	.81	20,64
7/8	.88	22,23
15/16	.94	23,81
1	1.00	25,40

Cylinder Speed Charts

Cylinder Speed

This chart will help you calculate the time required for an Enerpac cylinder to lift a load when powered by a 700 bar Enerpac hydraulic pump.

The Cylinder Speed Chart can also be used to determine the pump type and model best suited for an application when you know the plunger speed required.

To determine: Cylinder plunger speed

An RC256 cylinder (25 ton) is powered by a ZE3-Series two stage pump. While lifting the load, the cylinder plunger travels at 2,8 mm per second. While extending towards the load, the cylinder plunger travels at 30,9 mm per second.

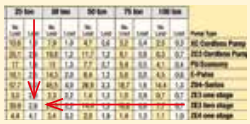

To determine: Best matching pump

Your 25 ton cylinder needs to move a load at a speed of 3,0 mm per second. Simply go down from the top of the chart, to the value of 2,8 mm per second. Follow the chart to the right to find that the ZE3-Series pump is most suitable for your application.



Millimetres of RC-Series cylinder plunger travel per hand pump plunger stroke

Cyl. Capacity ▶	5 ton		10 ton		15 ton		25 ton		30 ton		50 ton		75 ton		100 ton			
▼ Power Source	No Load	Load	No Load	Load	No Load	Load	No Load	Load	No Load	Load	No Load	Load	No Load	Load	No Load	Load	Pump Type	Page:
Manual	1,4	1,4	0,6	0,6	0,4	0,4	0,3	0,3	0,2	0,2	0,1	0,1	0,1	0,1	0,1	0,1	**P141**	**76**
	3,9	3,9	1,7	1,7	1,2	1,2	0,7	0,7	0,6	0,6	0,3	0,3	0,2	0,2	0,2	0,2	**P391**	**76**
	17,6	3,9	7,8	1,7	5,5	1,2	3,4	0,7	2,6	0,6	1,6	0,3	1,0	0,2	0,8	0,2	**P392**	**76**
	25,3	3,8	11,2	1,7	7,9	1,2	4,9	0,7	3,7	0,6	2,3	0,3	1,5	0,2	1,1	0,2	**P77/80/801/84**	**78**
	61,4	3,9	27,1	1,7	19,3	1,2	11,8	0,7	9,0	0,6	5,5	0,3	3,5	0,2	2,8	0,2	**P802/842**	**78**
	197	7,4	87,1	3,3	61,8	2,3	37,9	1,4	29,0	1,1	17,7	0,7	11,4	0,4	8,8	0,3	**P462/464**	**78**

Millimetres per Second of RC-Series Cylinder Plunger Travel

Cyl. Capacity ▶	5 ton		10 ton		15 ton		25 ton		30 ton		50 ton		75 ton		100 ton			
▼ Power Source	No Load	Load	No Load	Load	No Load	Load	No Load	Load	No Load	Load	No Load	Load	No Load	Load	No Load	Load	Pump Type	Page:
Electric Pumps (speed based on 50 Hz)	51,3	6,4	23,0	2,9	16,4	2,1	10,0	1,3	7,9	1,0	4,7	0,6	3,2	0,4	2,5	0,3	**XC Cordless Pump**	**86**
	128,2	13,3	57,5	6,0	41,1	4,3	25,1	2,6	19,8	1,2	11,7	1,2	8,1	0,8	6,3	0,7	**ZC3 Cordless Pump**	**88**
	86	8,3	38	3,7	27	2,6	17	1,6	13	1,3	7,7	0,7	5,4	0,5	4,1	0,4	**PU Economy**	**90**
	92,3	12,8	41,4	5,7	29,6	4,1	18,1	2,5	14,3	2,0	8,4	1,2	5,8	0,8	4,5	0,6	**E-Pulse**	**94**
	295	25,6	132	11,5	94,4	8,2	57,7	5,0	45,5	4,0	26,9	2,3	18,7	1,6	14,4	1,3	**ZU4-Series**	**97-98**
	15,1	14,1	6,8	6,3	4,8	4,5	3,0	2,8	2,3	2,2	1,4	1,3	1,0	0,9	0,7	0,7	**ZE3 one stage**	**97, 104**
	158	14,1	70,7	6,3	50,5	4,5	30,9	2,8	24,3	2,2	14,4	1,3	10,0	0,9	7,7	0,7	**ZE3 two stage**	**97, 104**
	22,3	21,0	10,0	9,4	7,1	6,7	4,4	4,1	3,4	3,2	2,0	1,9	1,4	1,3	1,1	1,0	**ZE4 one stage**	**97, 104**
	228	21,0	102	9,4	72,9	6,7	44,6	4,1	35,2	3,2	20,8	1,9	14,4	1,3	11,1	1,0	**ZE4 two stage**	**97, 104**
	44,9	42,1	20,1	18,9	14,4	13,5	8,8	8,2	6,9	6,5	4,1	3,8	2,8	2,7	2,2	2,1	**ZE5 one stage**	**97, 104**
	298	42,1	133	18,9	95,3	13,5	58,3	8,2	46,0	6,5	27,2	3,8	18,9	2,7	14,5	2,1	**ZE5 two stage**	**97, 104**
	76,9	70,0	34,5	31,4	24,6	22,4	15,1	13,7	11,9	10,8	7,0	6,4	4,9	4,4	3,8	3,4	**ZE6 one stage**	**97, 104**
	315	70,0	141	31,4	101	22,4	61,7	13,7	48,7	10,8	28,8	6,4	20,0	4,4	15,4	3,4	**ZE6 two stage**	**97, 104**
	53,8	53,8	24,1	24,1	17,2	17,2	10,5	10,5	8,3	8,3	4,9	4,9	3,4	3,4	2,6	2,6	**SFP421 (11 kW)**	**336**
Air Driven Pumps (at 6,9 bar air pressure)	51,3	6,4	23,0	2,9	16,4	2,1	10,0	1,3	7,9	1,0	4,7	0,6	3,2	0,4	2,5	0,3	**XA-Series**	**114**
	25,9	4,2	11,6	1,9	8,2	1,3	5,0	0,8	4,0	0,6	2,3	0,4	1,6	0,3	1,3	0,2	**PATG-serie Turbo II Air**	**112**
	17	3,4	7,6	1,5	5,4	1,1	3,3	0,7	2,6	0,5	1,5	0,3	1,1	0,2	0,8	0,2	**PA-Series**	**110**
	277	3,8	123	1,7	88	1,2	53	0,7	42	0,6	25	0,3	17	0,2	13,0	0,2	**PAM-Series**	**111**
	357	33,6	160	15,1	114	10,8	69,9	6,6	55,1	5,2	32,6	3,1	22,6	2,1	17,4	1,6	**ZA-Series**	**97, 116**
Gasoline Engine	295	41	132	18,4	94,4	13,1	57,7	8,0	45,5	6,3	26,9	3,7	18,7	2,6	14,4	2,0	**ZG5-Series 4,1 kW**	**97, 118**
	166	41	74,7	18,4	53,4	13,1	32,6	8,0	25,7	6,3	15,2	3,7	10,6	2,6	8,1	2,0	**ZG5-Series 4,8 kW**	**97, 118**
	376	85	169	37,9	121	27,1	73,8	16,6	58,2	13,1	34,4	7,7	23,9	5,4	18,4	4,1	**ZG6-Series 9,7 kW**	**97, 118**

No Load indicates the plunger speed as the plunger extends towards the load (1st stage).

Load indicates the plunger speed as the load is lifted at a system pressure of 700 bar (2nd stage).

Example: At what speed (V) will the RC256 (25 ton) cylinder move when powered by a ZE3-Series pump?
RC256 Cylinder Effective Area = 33,2 cm^2
ZE3-Series pump oil Flow (no load) = 6150 cm^3/min

$$\text{Cylinder Plunger Speed (mm/sec)} = \frac{\text{Pump Oil Flow } (cm^3/min) \times 10}{\text{Cylinder Effective Area } (cm^2) \times 60}$$

$$\text{Speed V} = \frac{6150\ cm^3/min \times 10}{33,2 \times 60} = 30,9\ mm/sec$$

Valve Information

ENERPAC

Ways

The (oil) ports on a valve.
A 3-way valve has 3 ports: pressure (**P**), tank (**T**), and cylinder (**A**).
A 4-way valve has 4 ports: pressure (**P**), tank (**T**), advance (**A**) and retract (**B**).

Single-Acting cylinders require at least a 3-way valve, and can, under certain instances, be operated with a 4-way valve.

Double-Acting cylinders require a 4-way valve, providing control of the flow to each cylinder port.

Positions

The number of control points a valve can provide. A 2-position valve has the ability to control only the advance or retraction of the cylinder. To be able to control the cylinder with a hold position, the valve requires a 3rd position.

Centre Configuration

The centre position of a valve is the position at which there is no movement required of the hydraulic component, whether a tool or cylinder.



The most common is the **Tandem Centre**. This configuration provides for little to no movement of the cylinder and the unloading of the pump. This provides for minimum heat build-up.



The next most common is the **Closed Centre** configuration, which is used mostly for independent control of multi-cylinder applications. This configuration again provides for little to no movement of the cylinder, but also dead-heads the pump, isolating it from the circuit.
Use of this type of valve may require some means of unloading the pump to prevent heat build-up.

There are many more type of valves, such as **Open Centre** and **Float Centre**. These valves are used mostly in complex hydraulic circuits and require other special considerations.



Open Centre



Float Centre

Directional Control Valves

3-Way Valves
are used with single-acting cylinders.

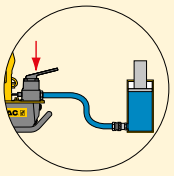

4-Way Valves
are used with double-acting cylinders.

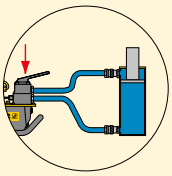

Valves may be either pump mounted or remote mounted.

Pump Mounted

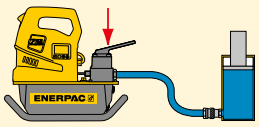

Remote Mounted

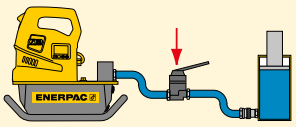

Valves may be either manually or solenoid operated.

Manually Operated

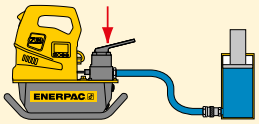

Solenoid Operated

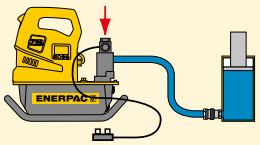

Advance Hold Retract

Single-acting cylinder
Controlled by a 3-way, 3-position valve.

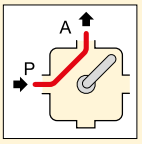

Advance
The oil flows from the pump pressure port P to the cylinder port A: the cylinder plunger will extend.

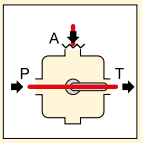

Hold
The oil flows from the pump pressure port P to the tank T. The cylinder port A is closed: the cylinder plunger will maintain its position.

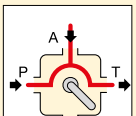

Retract
The oil flows from the pump and cylinder port A to the tank T: the cylinder plunger will retract.

Double-acting cylinder
Controlled by a 4-way, 3-position valve.

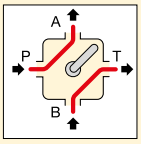

Advance
The oil flows from the pump pressure port P to the cylinder port A and from cylinder port B to tank T.

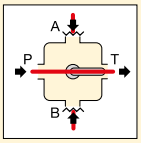

Hold
The oil flows from the pump pressure port P to the tank T. The cylinder ports A and B are closed: the cylinder plunger will maintain position.

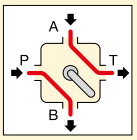

Retract
The oil flows from the pump pressure port P to cylinder port B and from cylinder port A to tank T: the cylinder plunger will retract.

© Enerpac

Hexagon Nut and Bolt Sizes

METRIC SIZES

Thread Size D (mm)	Hexagon Size S (mm)	Hexagon Size J (mm)
M 10	17	8
M 12	19	10
M 14	22	12
M 16	24	14
M 18	27	14
M 20	30	17
M 22	32	17
M 24	36	19
M 27	41	19
M 30	46	22
M 33	50	24
M 36	55	27
M 39	60	27 (30)
M 42	65	32
M 45	70	-
M 48	75	36
M 52	80	36
M 56	85	41
M 60	90	46
M 64	95	46
M 68	100	50
M 72	105	55
M 76	110	60
M 80	115	65
M 85	120	70
M 90	130	70 (75)
M 95	135	-
M 100	145	85
M 105	150	-
M 110	155	-
M 115	165	-
M 120	170	-
M 125	180	-
M 130	185	-
M 140	200	-
M 150	210	-

IMPERIAL SIZES

Thread Size D (inch)	Hexagon Size * S (inch)	Hexagon Size J (inch)
5/8"	1 1/16"	1/2"
3/4"	1 1/4"	5/8"
7/8"	1 7/16"	3/4"
1"	1 5/8"	3/4"
1 1/8"	1 13/16"	7/8"
1 1/4"	2"	7/8"
1 3/8"	2 3/16"	1"
1 1/2"	2 3/8"	1"
1 5/8"	2 9/16"	-
1 3/4"	2 3/4"	1 1/4"
1 7/8"	2 15/16"	1 3/8"
2"	3 1/8"	1 5/8"
2 1/4"	3 1/2"	1 3/4"
2 1/2"	3 7/8"	1 7/8"
2 3/4"	4 1/4"	2"
3"	4 5/8"	2 1/4"
3 1/4"	5"	2 1/4"

* Heavy hexagon nuts.

Determine the maximum torque according to the bolt (nut) size and grade. Always consult the manufacturers instructions or engineering recommendations when making bolted connections.

IMPORTANT

The hexagon sizes shown in the tables should be used as a guide only. Individual sizes should be checked before specifying any equipment.



BSH-Series Heavy Duty Sockets

Use only Heavy Duty Impact Sockets for power driven torquing equipment, according to ISO2725 and ISO1174; DIN3129 and DIN3121 or ASME-B107.2/1995.

Page: 216

Tel: +45 63 12 83 00 | Email: ps@hymatik.com | www.hymatik.com | Hvidkaervej 27a, DK-5250 Odense SV, Denmark

Torque Tightening

ENERPAC

Tightening Methods

Principally there are two modes of tightening: "Uncontrolled" and "Controlled".

Uncontrolled tightening

Uses equipment and/or procedures that cannot be measured. Preload is applied to a bolt and nut assembly using a hammer and spanner or other types of impact tools.

Controlled tightening

Employs calibrated and measurable equipment, follows prescribed procedures and is carried out by trained personnel.

Advantages of Controlled Tightening

Known, controllable and accurate bolt loads

Employs tooling with controllable outputs and adopts calculation to determine the required tool settings.

Uniformity of bolt loading

Especially important on gasketed joints as an even and consistent compression is required for the gasket to be effective.

Safe operation following prescribed procedures

Eliminates the dangerous activities of manual uncontrolled tightening and requires that the operators be skilled and follow procedures.

Reduces operational time resulting in increased productivity

Reduces tightening time and operator fatigue by replacing manual effort with the use of controlled tooling.

Reliable and repeatable results

Using calibrated, tested equipment, following procedures and employing skilled operators achieves known results consistently.

The right results first time

Many of the uncertainties surrounding in-service joint failures are removed by ensuring the correct assembly and tightening of the joint the first time.

Bolting Tools

For further information on Torque Tightening or other controlled tightening methods, please visit our website or ask for our **Bolting Tools Catalogue**.

Bolting Integrity Software

A comprehensive free on-line software solution for Bolted Joint Integrity.

Integral databases hold data for:

- ASME B16.5, ASME B16.47, API 6A and API 17D flanged joints
- Common gasket materials and configurations
- Comprehensive range of bolt materials
- Comprehensive range of lubricants
- Enerpac's Controlled Bolting Equipment including: Torque Multipliers, Hydraulic Wrenches and Bolt Tensioning tools.

Custom Joint information can also be entered.

The software offers Tool selection, Bolt Load calculations and Tool pressure settings, as well as a combined Application data sheet and Joint completion report.

Page: 412

What is Torque?

It is a measure of how much force acting on an object causes that object to rotate.

What is Torque Tightening?

The application of preload to a fastener by the turning of the fastener's nut.

Torque Tightening and Preload

The amount of preload created when torqueing is largely dependant on the effects of friction.

Principally there are three different "torque components":

- torque to stretch the bolt
- torque to overcome the friction in bolt and nut threads
- torque to overcome friction at the nut spot face (bearing contact surface).

Torque Tightening

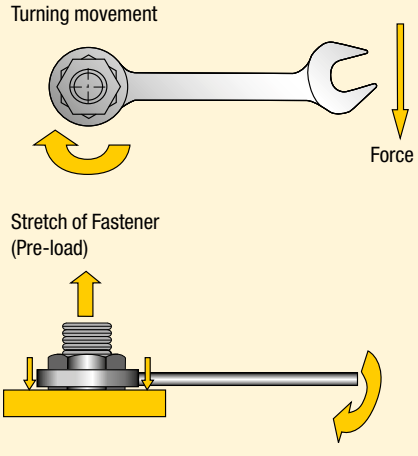

Torque Tightening

Preload (residual load) =
Applied Torque *minus* Frictional Losses

Lubrication Reduces Friction

Lubrication reduces the friction during tightening, decreases bolt failure during installation and increases bolt service life. Variation in friction coefficients affect the amount of preload achieved at a specified torque. Higher friction results in less conversion of torque to preload. The value for the friction coefficient provided by the lubricant manufacturer must be known to accurately establish the required torque value.

Lubricant or anti-seizure compounds should be applied to both, the nut bearing surface and the male threads.

Frictional Losses

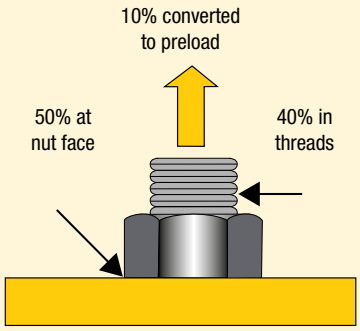

Frictional Losses (dry steel bolt)

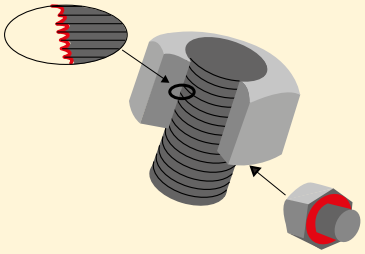

Friction points should always be lubricated when using the torque tightening method.

Torque Procedure

When torquing it is common to tighten only one bolt at a time, which can result in Point Loading and Load Scatter.

To avoid this, torque is applied in stages following a prescribed pattern:

Torque Sequence

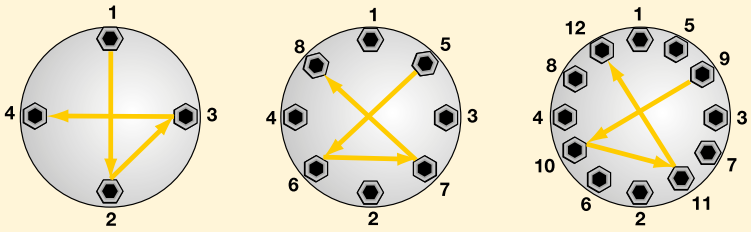

Step 1 Spanner tight ensuring that 2 - 3 threads extend above nut.

Step 2 Tighten each bolt to one-third of the final required torque following the pattern as shown above.

Step 3 Increase the torque to two-thirds following the pattern shown above.

Step 4 Increase the torque to full torque following the pattern shown above.

Step 5 Perform one final pass on each bolt working clockwise from bolt 1, at the full final torque.

Select the Right Torque Wrench

Choose your Enerpac torque wrench using the untightening rule of thumb:

- When loosening a nut or bolt, more torque is usually required than when tightening.
- For general conditions it can take up to **2½ times** the input torque to breakout.
- Do not apply more than 75% of the maximum torque output of the tool when loosening nuts or bolts.

Conditions of bolted joints

- Humidity corrosion (rust) requires up to **twice** the torque required for tightening.
- Sea water and chemical corrosion requires up to **2½ times** the torque required for tightening.
- Heat corrosion requires up to **3 times** the torque required for tightening.

Breakout Torque

When loosening bolts a torque value higher than the tightening torque is normally required. This is mainly due to corrosion and deformations in the bolt and nut threads.

Breakout torque cannot be accurately calculated, however, depending on conditions it can take up to **2½ times** the input torque to breakout.

The use of penetrating oils or anti-seize products is always recommended when performing breakout operations.

Tensioning

ENERPAC

Tensioning requires longer bolts

INCORRECT

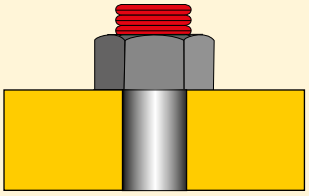

CORRECT

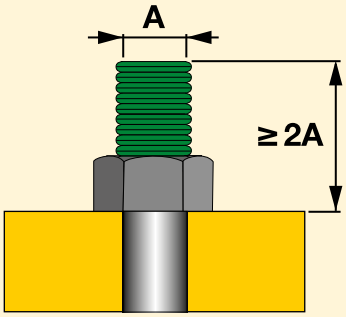

What is Bolt Tensioning?

Tensioning is the direct axial stretching of the bolt to achieve preload. Inaccuracies created through friction are eliminated. Massive mechanical effort to create torque is replaced with simple hydraulic pressure. A uniform load can be applied by tensioning multiple studs simultaneously.

Tensioning requires longer bolts, and a seating area on the assembly around the nut. Tensioning can be done using detachable Bolt Tensioners or Hydraulic Nuts.

Preload (residual load) = Applied Load minus Load Losses

What is Load Loss?

Load loss is a loss of bolt elongation depending on factors such as thread deflections, radial expansion of the nut, and embedding of the nut into the contact area of the joint. Load loss is accounted for in calculation and is added to the preload value to determine the initial **Applied Load**.

The preload depends on Applied Load and Load Loss (load loss factor).

GLOSSARY OF TERMS

Applied Load:
The load applied to a bolt during tensioning which includes an allowance for Load Loss.

Bolt Tensioning:
A method of controlled tightening which applies preload to a bolt by stretching it axially.

Breakout Torque:
The amount of torque required to loosen a tightened bolt. (Usually more torque is required to loosen a bolt than was used to tighten it.)

Elastic Range:
The range on a bolt's stress / strain curve where stress is directionally proportional to strain.

Plastic Range:
The range on a stress / strain curve where the tensile load applied to a bolt results in permanent deformation.

Load Loss:
The losses in a bolt which occur on transfer of load from a tensioning device to the bolt assembly (these may arise from phenomena such as thread deflection and embedding of the nut to the contact area of the joint, and is calculated as a factor of the length to diameter ratio of the bolt).

Load Scatter:
The spread of differing loads in a sequence of bolts after they have been loaded. It is mostly due to the elastic interaction of the bolts and the joint member; as subsequently tightened bolts further compress the joint, previously tightened bolts are subject to some relaxation.

Preload:
The load in a bolt immediately after it has been tightened.

Proof Load:
Proof load is often used interchangeably with Yield Strength but is usually measured at 0,2% plastic strain.

Tensile Point:
The point at which the tensile loading on a bolt causes the bolt to rupture.

Torque Tightening:
The application of Preload to a bolt by turning of the bolt's nut.

Ultimate Strength:
The maximum tension which can be created by tensile load on a bolt.

Yield Strength:
The point at which a bolt begins to plastically deform under tensile loading.

NOTE: Bolt is used as a generic term for a threaded fastener.

Tensioning

80% **Manufacturer's rating of pressure and load are maximum safe limits. Good practice encourages using only 80% of these ratings!** **80%**

Tensioning Operation

Tensioning permits the simultaneous tightening of multiple bolts; the tools are connected in sequence via a high-pressure hose assembly to a single pump unit. This ensures each tool develops the exact same load and provides a uniform clamping force across the joint. This is especially important for pressure containing vessels requiring even gasket compression to affect a seal.

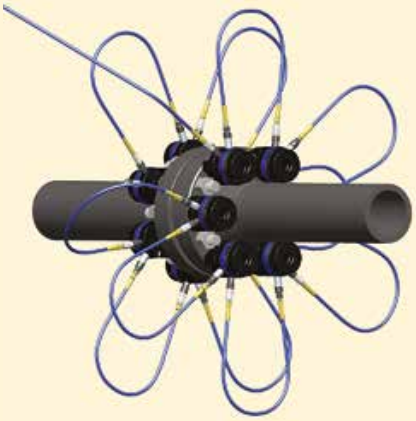

General Procedure

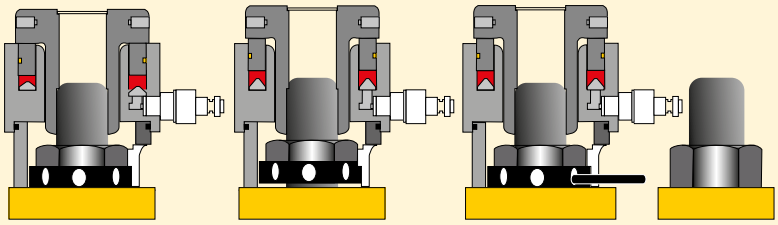

Step 1 Step 2 Step 3 Step 4

Step 1: The bolt tensioner is fitted over the stud.

Step 2: Hydraulic pressure is applied to the tensioner which then stretches the stud (bolt).

Step 3: The stud's nut is wound down against the joint face

Step 4: Hydraulic pressure is released and the tensioner removed.

The bolt behaves like a spring, when the hydraulic pressure is released the bolt is under tension and attempts to contract, creating the required clamping force across the joint.

Set-up using a 100% tensioning procedure

All bolts are tensioned simultaneously.

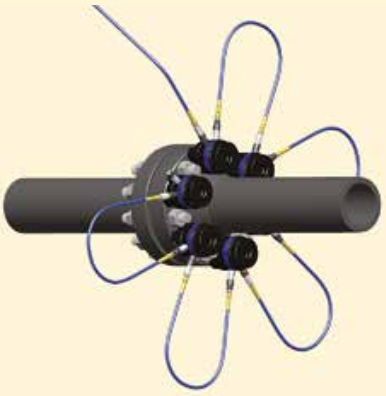

Less than 100% Tensioning

Not all applications allow for the simultaneous fit of a tensioning device on each bolt, in these cases at least two tensioning pressures are applied. This is to account for a load loss in those bolts already tensioned as the next sets are tightened.

The load losses are accounted for in calculation and a higher load is applied to allow the first sets to relax back to the target preload.

Set-up using a 50% tensioning procedure

Half the bolts are tensioned simultaneously, the tools are relocated on the remaining bolts and they are subsequently tensioned.

Read Instruction Manuals

Please refer to the product Instruction Sheets for safe use guidelines and detail on the correct set up and operation of the equipment.

Bolting Integrity Software

ENERPAC

Enerpac Bolting Integrity Software Solutions play a key role in implementing and managing an Integrity Programme for bolted connections. The software is used extensively within Enerpac and increasingly by a wide range of clients worldwide often interfacing with maintenance, construction and commissioning management systems.

- First developed over 20 years ago, we have continued to update and enhance the software based on user feedback, technology advances and our roles on Industry standard committees, to produce the most comprehensive suite of joint integrity software available.
- Recommended bolt loads for standard joints are derived from independently verified calculation methods and traceable back to standards

Integral databases hold data for:

- ASME B16.5, ASME B16.47, API 6A and API 17D flanged joints
- Common gasket materials and configurations
- Comprehensive flange and bolt materials
- Comprehensive range of lubricants
- Enerpac controlled bolting equipment includes torque, multipliers, hydraulic wrenches and bolt tensioners.
- Custom joint information can also be entered.



▲ Standard flange calculation menu (INFORMATE)

The Enerpac Bolting Software Suite includes:

- **Bolt-Up** - Online bolt load calculator. Free access and use on www.enerpac.com.
- **INFORMATE** - Advanced calculation and procedure software. Contact Enerpac for user licenses and dedicated support.
- **IDMS Integrity Data Management System** - A complete Integrity Assurance project management package for managing bolted joints from cradle to grave. Contact Enerpac for user licenses and dedicated support.

Bolt-Up

Bolt-Up is a simple to use online calculator, built upon the Informate calculation engine, providing reliable, repeatable bolt loads for:

- Carbon steel weldneck ANSI 16.5 standard flanges, using a limited range of bolt materials; selected gasket options and a fixed lubrication value.
- Inputting basic joint configuration information allows Bolt-Up to to determine: bolt load; bolt stress and the required torque. These outputs are displayed alongside basic flange and bolt information e.g. joint thickness and bolt size/quantity.

Bolting Integrity Software

The software offers Tool selection, Bolt Load calculations and Tool pressure settings, as well as, a combined Application data sheet and Joint completion report.
This software includes following hydraulic tools selections:

- S, W, RSL, DSX and HMT-Series Torque Wrenches,
- HM-Series HydraMax®, GT-Series Bolt Tensioners and EAJ-Series AquaJack Subsea Tensioners.

Software Model Nr.	INFORMATE Subscriptions Contact Enerpac for details
BSO1PP	Bolting Software 1 person purchase
BSO1PAS	Bolting Software 1 person annual support
BSO5PP	Bolting Software 5 person purchase
BSO5PAS	Bolting Software 5 person annual support

Tel: +45 63 12 83 00 | Email: ps@hymatik.com | www.hymatik.com | Hvidkaervej 27a, DK-5250 Odense SV, Denmark

Bolting Integrity Software



▲ Engineered Joint menu (INFORMATE)



▲ Clamp menu (INFORMATE)

INFORMATE Bolt Load Calculation Software

INFORMATE can be used on a huge range of flanged joints and clamped connections in virtually any situation from process piping to custom-designed flange connections.

- Calculate bolt loads and stresses, determine tooling pressures for Enerpac torque and tensioning equipment; analyse existing connections and test custom designed connections.
- Extensive material database covering all common standards:
  - Common and industry specific lubricants
  - 200+ bolting materials
  - 500+ flange materials
  - 60+ gasket materials
- Engineered Joint Calculation Features - allows for different types of bolted application for non-circular or structural applications.
- Installed direct to the desktop or accessed via the internet, Informate is available in a single version that is configurable to client requirements and includes multiple international standards and the latest and forthcoming regulatory data, when taken with a maintenance package.

Integrity Data Management System (iDMS)

iDMS is a flexible data management and activity planning system specifically for use on assets featuring bolted connections.

Designed to store the entire lifecycle data relating to every critical bolted joint on an installation, it aids planning, ensures joint integrity, as well as reducing construction and maintenance schedules and costs.

- Provides managers and technicians with essential information about joint components used in assembly, in addition it specifies the tools and the torque or tension values to deliver a leak-free joint.
- Allows planner and maintenance engineers to rapidly build packages of work complete with all documentation and then track them to completion
- Whenever a joint is worked on, all of the previous history and experience of that joint is available, allowing any particular requirements of the joint to be taken into account proactively prior to joint assembly and tightening.

iDMS Custom Tailored Solutions available to meet client needs, for example:

- Embedded Informate bolted joint calculator
- Export and import of data to asset management systems
- Exporting data to populate customer documentation
- Colour coding of the joint provides an instant review of the status.

Contact Enerpac for User License

Enerpac Academy

ENERPAC

The Enerpac Academy is our in-house training program, offering Enerpac product operators and maintenance staff the opportunity to be trained in the safe use and maintenance of high-pressure hydraulic tools.

Operating these tools requires sound knowledge of how they work and how they should be maintained. Correct use of these tools increases safety and reduces risk – both for the operator and the environment in which the tools are used. Having the right training enables the operator to use the tools safely and properly.

- Safety focus for operators, tools and environment
- Dedicated in-house Enerpac training centers
- Both standard training courses and specialized training services
- Highly experienced training staff
- Develops alternative training options such as:
  - eLearning modules
  - vLearning sessions
  - Instructional videos

In-house Training Centres



Do you work with high-pressure hydraulic tools on a regular basis or even every day? The training courses are designed to be highly interactive with a strong hands-on element. Each training course is led by a qualified trainer, an Enerpac specialist capable of providing high quality training. A written or practical exam is part of certain training courses.

Training Centre Locations



Enerpac Academy offers a meticulously compiled training program covering tool knowledge, repairs and maintenance, and safe operation of Enerpac hydraulic tools. If you would like to schedule a training course, please contact Enerpac for a training calendar, application form, and brochure at www.enerpac.com.

- Ede (The Netherlands)
- Bangalore (India)
- Columbus, Wisconsin (USA)
- Perth (Australia)
- Singapore

In-Person Training



- Highly experienced training staff
- Class sizes range from 8 to 20, depending on class and location
- Commercial Sales, Service and Repair Class capabilities
- Most classes consist of theoretical and hands-on training.

The Power of Knowledge & Enerpac Maintenance Program

eLearning Modules



- Enerpac Training available on “your” schedule
- Courses available to support New Product Launches, Product Awareness Training and Enerpac Academy Courses
- Available to external viewers through Enerpac’s “LDMS” system.

EMP – Enerpac Maintenance Program

EMP is a preventive maintenance program. Your Enerpac Authorized Service Centre will check the tools on essential points: leaking, oil level and quality, maximum pressure setting, and damage. EMP reduces operational risks, increases safety and minimises extremely expensive delays in your operations. You will be advised about regular maintenance of the Enerpac tools.

- Work more safely
- Minimise operational risk
- Ensure tools are always available and in tip-top shape
- As good as new after repair
- Prevent downtime
- Advice on safe and effective use
- Maintenance when tools are not used.

vLearning Sessions

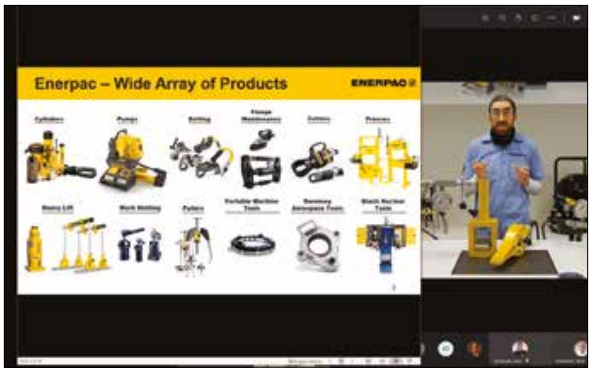

- Interactive training available on-line
- Sessions contain Technical Presentations, Hands-on product demos and end with a Q&A session
- Classes cover many topics, such as Product Operational information and Service & Repair Training
- Look for scheduling and registration details on www.enerpac.com

Instructional Videos



- Informational videos created with Enerpac Academy Training processes in-mind
- Topics range from product “how-to” videos to application and operational videos
- Videos are available on the Enerpac “You-Tube” channel and other venues, where appropriate.

Enerpac Worldwide Locations

ENERPAC

www.enerpac.com/en-gb/contact/e/locations

Australia and New Zealand
Actuant Australia Pty Ltd.
3 Orion Rd, Jandakot, WA 6164, Australia
Tel: +61 287 177 200
Fax: +61 297 438 648
Australia Toll Free: +1800 225 084
New Zealand Toll Free: +0800 363 772

Brazil
Power Packer do Brasil Ltda.
Rua Luiz Lawrie Reid, 548
09930-760 - Diadema (SP)-Brasil
Tel: +55 11 5687 2211
Toll Free: 0800 891 5770

China (Taicang)
Actuant (China) Industries Co.Ltd.
No. 6 Nanjing East Road,
Taicang Economic Dep Zone, Jiangsu, China
T +86 0512 5328 7500
F +86 0512 5335 9690
Toll Free:
T +86 400 885 0369

Enerpac Heavy Lifting Technology B.V.
Zuidelijke Havenweg 3, 7554 RR Hengelo
P.O. Box 421, 7550 AK Hengelo, The Netherlands
T +31 74 242 20 45
F +31 74 243 03 38

France and French speaking Switzerland
ENERPAC France S.A.S
6 rue du 4 septembre,
Immeuble Le Poversy, Bâtiment B - 6ème étage,
92130 Issy-les-Moulineaux, France
Tel: +33 1 60 13 68 68
Fax: +33 1 69 20 37 50

Germany, Austria and German speaking Switzerland
Actuant GmbH
Boelckestrasse 21-23
D-50171 Kerpen, Germany
T +49 (0)2237 92301-0
F +49 (0)2237 92301-180

Central and Eastern Europe, Russia, Baltic States and CIS countries
Enerpac Eastern Europe Sp. z o.o.
Krakowska Street 280,
building: Eximius Park 200, floor 1,
32-080 Zabierzów, Poland

India
Enerpac India Private Limited
No. 10, Bellary Road, Sadashivanagar,
Bangalore, Karnataka - 560 080 India
T +91 80 3928 9000

Italy, Greece and Turkey
ENERPAC S.p.A.
Via Leonardo da Vinci, 97
20090 Trezzano sul Naviglio (Milano)
T +39 02 4861 111
F +39 02 4860 1288

Japan
Enerpac Co., Ltd.
Besshocho 85-7
Kita-ku, Saitama-shi 331-0821, Japan
T +81 48 662 4911
F +81 48 662 4955

Middle East, North Africa and Caspian Sea Countries
ENERPAC Middle East FZE
Swiss Tower, Office 902, Cluster Y,
Jumeirah Lake Towers,
Dubai-United Arab Emirates
Tel: +971 4 527 0700

Norway
ENERPAC AS
Kirkegata 3, NO-2000, Lillestrom
P.O. Box 3051, NO-2028, Lillestrom, Norway
Tel: +47 91 578 300

Southeast Asia, Hong Kong and Taiwan
Actuant Asia Pte Ltd.
25 Pandan Crescent,
#05-11/12/13 Tic Tech Centre
Singapore 128477
T +65 68 63 0611
F +65 64 84 5669
Toll Free:
T +1800 363 7722

South Korea
Actuant Korea Ltd.
48, Mayu-ro, 20-beon-gil, Shiheung-si
Gyeonggdi-do, 15116 South Korea
T +82 31 434 4506
M +82 (0)10 7134 4508

Spain and Portugal
ENERPAC SPAIN, S.L.
Avenida Valdelaparra N° 27 3ª - L8
28108 Alcobendas (Madrid), Spain
T +34 91 884 86 06
F +34 91 884 86 11

South Africa and other English speaking African countries
ENERPAC AFRICA (PTY) Ltd.
Cambridge Office Park, Block E
5 Bauhinia Avenue
Highveld Techno Park, Centurion 0157
Republic of South-Africa
T 0027 (0) 12 940 0656

Sweden, Denmark, Finland and Iceland
Enerpac Scandinavia AB
Box 83, 82222 Alfta, Sweden
Tel: +46 (0) 415 000

The Netherlands, Belgium, Luxembourg
ENERPAC B.V.
Galvanistraat 115, 6716 AE Ede
P.O. Box 8097, 6710 AB Ede, The Netherlands
T +31 318 535 911
F +31 318 535 848

United Kingdom and Ireland
ENERPAC UK LTD
5 Coopies Field
Morpeth, Northumberland
NE61 6JR, England
T +44 800 1380500
F +44 1670 5016 51

USA, Latin America and Caribbean
ENERPAC World Headquarters
P.O. Box 3241
Milwaukee, WI 53201-3241 USA
N86 W12500 Westbrook Crossing
Menomonee Falls, Wisconsin 53051
T +1 262 293 1600
F +1 262 293 7036
User inquiries:
+1 800 433 2766
Distributor inquiries/orders:
+1 800 558 0530
+1 800 628 0490

While every care has been taken in the preparation of this catalogue and all data contained within is deemed accurate at the time of printing, Enerpac does reserve the right to make changes to the specifications of any product, or discontinue any product, contained within this catalogue without prior notice.
All illustrations, performance specifications, weights and dimensions reflect the nominal values and slight variations may occur due to manufacturing tolerances. Please consult Enerpac if final dimensions are critical.

**All information in this catalogue can be changed due to product improvements without prior notice. © Copyright 2021, Enerpac. All rights reserved.
Any copying or other use of material in this catalogue (text, illustrations, drawings, photo's) without express written consent is prohibited.**

Worldwide Catalogue Coverage

Enerpac Catalogues are printed in many languages. If your requirements call for product use in a different country, please send your request to the applicable country listed on page 416 or **enerpac.com** The Enerpac catalogue of the country serving your specific market area will be forwarded promptly.



Model Number Index

Page(s) ▼

A
A5-A10 ... 176
A12 ... 10
A13-A28 ... 176
A29-A53 ... 10
A64-A66 ... 132
A92 ... 176, 187
A102 ... 10, 41
A128-A192 ... 176
A183 ... 152
A185 ... 152, 176
A200R ... 154
A205-A220 ... 152
A218-A305 ... 176
A252 ... 10, 41
A310, A330 ... 152
A530-A595 ... 176
A604 ... 130-131
A607, A650 ... 176
A630 ... 130-131
AH ... 130-131
AM ... 132
AMGC ... 29, 142
AR ... 130-131
ATM ... 306-307
ATP ... 303
AW ... 10

B
B ... 197, 301
BAD ... 39
BC ... 197
BFZ ... 133
BH ... 301
BHP ... 158-161, 164-165
Bolt-Up ... 412
BLS ... 346-347
BLJS ... 349
BLT ... 261
BPR ... 150-151
BR ... 301
BRC ... 32-33
BRD ... 38-39
BRP ... 32-33
BS ... 387
BSA ... 137, 139
BSH ... 216
BSO ... 412
BSS ... 154
BUS ... 217
BW ... 301
BZ ... 188-189

C
C ... 130-131
CATS ... 10, 13, 15, 21 ... 27, 41, 49-59
CD-CF-CH ... 130-131
CH720 ... 208-209
CHM ... 7
CHT ... 385
CLN ... 341
CM ... 186
CMF ... 131
CR-CT ... 130-131
CU ... 22-23
CW ... 176

D
DDA ... 248
DDU ... 389
DLR ... 378-379
DGR ... 141
DSA ... 261
DSX ... 246-248, 265

E
E ... 256-257
EAJ ... 292-293
EBC ... 197
EBE ... 196
EBH ... 195
ECCE ... 200-201
ECSE ... 205
ED ... 261
EDCH ... 198
EFBE ... 199
ELP ... 184-185
EMP ... 415
EP ... 94-95, 265, 268-269
EPH ... 170-171
ER ... 184-185
ERA ... 241, 261
ERT ... 241, 261
ES ... 184-185
ETR ... 364-365
ETT ... 366
EVO ... 338-341
EWC ... 202-204

F
F ... 130-131
F01 ... 379
FC ... 331
FF ... 316-317, 376
FH ... 130-131
FR ... 130-131
FRL ... 258-259
FSB ... 308-309
FSC ... 308-309, 312
FSH, FSM ... 308-309
FTE ... 298-299
FTR ... 286-297
FZ ... 133

G
G ... 136-137
GA ... 142-143
GBJ ... 67
GeniSYS ... 390-391
GF ... 136-137
GKHC ... 195, 198, 203
GMRF ... 383
GP ... 136-137
GPS ... 169
GST ... 354
GT ... 270, 273

H
H ... 128-129, 138-139
HA ... 128-129
HB ... 128-129
HBH ... 354
HC ... 128-129
HCG ... 44-51
HCL ... 44-47, 56-59
HCR ... 44-47, 52-55
HCRL ... 42-46, 60-61
HF ... 132
HLP ... 250-253
HM ... 286-289
HMT ... 250-255
HP ... 19, 35, 37, 333
HPT ... 300
HRP ... 252
HSK ... 362-363
HSL ... 350-351
HSQ ... 254-255
HT ... 301, 388
HTE ... 252
HTM ... 384

I
iDMS ... 412-413
INFORMATE ... 412-413
IPL ... 154
IPM ... 168

J
JBA ... 13
JBI ... 10
JH, JHA ... 66
JS ... 348-349

L
LAT ... 265, 278-279
LGH ... 164-165, 167
LGM ... 162-163, 167
LH ... 155, 358-361
LMR ... 382
LPH ... 384
LPL ... 24-25, 45
LSA ... 385
LW ... 65, 182

M
MCS ... 264
MDWS ... 386
MG ... 318, 330
MHT ... 384
MITT ... 392-393
ML ... 354-355
MM ... 376-377
MP ... 82
MR ... 382
MS ... 174-177
MSP ... 178-179
MST ... 304
MTPP ... 367
MZ ... 174-177

N
NC ... 310-311
NCB ... 311
NSC ... 312-313
NSH ... 312-315
NSP ... 314-315
NV ... 143

O
OM ... 380

P
P ... 64, 76-81, 83 ... 84-85, 165, 167
P142AL, P392AL ... 64
P392FP ... 63, 83
PA ... 110
PAM ... 111
PAMG ... 112-113
PARG ... 112-113
PATG ... 112-113, 188
PC ... 76, 78
PF25 ... 103, 108
PGT ... 294-295
PL ... 70-71
PR ... 68-69
PTW ... 258-259
PU ... 90-91, 165, 167, 188

R
RA ... 11-21
RAC ... 12-13
RACH ... 16-17
RACL ... 14-15
RAR ... 20-21
RARH ... 18-19
RAT ... 261
RB ... 10
RC ... 6-9, 62-65
RCH ... 34-35, 62
RCS ... 26-27, 62, 65
RE ... 10
RFL ... 110-112
RLP ... 234-243
RLT ... 28-28
RP ... 190-191
RR ... 40-43
RRH ... 36-37
RSM ... 26-27, 65
RSL ... 234-243, 265
RSQ ... 234-235, 244-245
RT ... 30-31
RTE ... 215
RWH ... 158-160

S
S ... 212-215, 265
SB ... 182, 309
SBJS ... 349
SBL ... 356-357
SBLT ... 349
SBZ ... 103, 108, 274
SC ... 62-63, 65
SCC ... 350
SCH ... 63
SCJ ... 342-345
SCL ... 63, 65
SCR ... 63, 65
SDA ... 214
SFM ... 134-135
SFP ... 336-339, 359
SG ... 318, 324-327
SGH ... 169
SGM ... 163
SHC ... 352-353
SHP ... 352-353
SL ... 356-357
SLR ... 261
SLS ... 65
SLW ... 65
SOH ... 183
SP ... 178-181
SPD ... 179
SPK ... 178
SPMT ... 367
SRA ... 261
SRS ... 65, 215
STB ... 188-189
STC ... 206
STF ... 309
STN ... 310
STP ... 179
STTC ... 262-263
STTL ... 218-219
SWH ... 212, 220, 230, 246, 254
SWi ... 318, 320-323
SWR ... 65

T
T ... 130-131, 140, 389
TES ... 355
TFA ... 332
TH ... 131
THQ ... 249
TM ... 155
TQ ... 270-271, 265
TR ... 131
TSP ... 212, 215, 232
TWM ... 241

V
V ... 64, 143-145
VA2 ... 111
VB ... 149, 154
VC3, VC4 ... 124-125
VC10 ... 318, 328-329
VC15, 20 ... 124-125
VE ... 122-123
VHJ ... 154
VLP ... 148-149
VM ... 122-123, 125
VMC ... 123, 125
VU ... 123

W
W ... 220-232, 265
WCB ... 206-207
WHC ... 206
WHR ... 206
WMC ... 207
WP ... 381
WR ... 177, 187
WRP ... 232
WTE ... 232

X
XA ... 63, 114-115 ... 165, 167
XC ... 63, 86-87 ... 165, 167, 266-267
XLK ... 114
XLP ... 148-149, 154
XSC ... 114, 133

Z
Z ... 131
ZA4 ... 97, 116-117
ZA4T ... 97, 265, 280-285
ZC3 ... 88-89, 190-191, 209
ZCF ... 102, 108
ZE2 ... 92-93, 97
ZE3-ZE6 ... 97, 104-109 ... 208-209
ZE4T, ZE5T ... 265, 276-277
ZG ... 97, 118-119
ZHE ... 102, 109
ZLS ... 103, 108
ZPF ... 103, 108
ZPS ... 109
ZPT ... 102, 109
ZRB ... 102, 108
ZRC ... 102, 108
ZU4 ... 97-103, 188
ZU4T ... 97, 265, 272-275
ZUTP ... 302

11
11 - 45 ... 84-85, 140
67 ... 327, 329
72 - 83 ... 84, 140
1440 ... 333
3027 ... 333

Cylinders & Lifting Products



Pumps & Directional Valves



System Components & Control Valves



Presses



Pullers



Specialty Tools



Cutters



Bolting Tools



Flange Maintenance Tools



Heavy Lifting Technology



On-site Machining Tools



EXTENSIVE GLOBAL DISTRIBUTION NETWORK

WHERE TO BUY THE RIGHT TOOLS

With over 1500+ distributors and 3500+ points of sale in over 100+ countries, Enerpac has a vast distribution network to reach all your local industrial tool needs. Find on-demand access to application experts who can provide hands-on demonstrations, help with product selection or discuss rental options along with on-going service.



WORLD CLASS SUPPORT

RESULTS IN THE RIGHT TOOL

Whether you're looking for help identifying the right product, receive technical support, training or request product materials, we have experts ready to answer your questions and provide guidance on the tool or accessory that will help get your toughest job done. Reach out to us at Enerpac.com/support.

GET THE LATEST VERSION

Enerpac © 09-2021 9830GB