



aerospace
climate control
electromechanical
filtration
fluid & gas handling
hydraulics
pneumatics
process control
sealing & shielding





# Parker Level Switch

## Pneumatic Technology Products



Parker

ENGINEERING YOUR SUCCESS.

# Level switch

## Scope of application

| Classification | Model Name | Fluid used | Use division | Scope of application |
|---|---|---|---|---|
| Propeller type | JB-SD | Powder<br>Granules<br>Lumps | Grains<br>Cement<br>Sand<br>Flour | Styrofoam, Resin |
| | JC7-SD, SL | | | Wheat flour, Soybean, Feed, Sugar, Cement, Sand, Gravels, Molding sand, Ore, Coal, Coke |
| | JC7-SH | | | |
| | JC7-ST | | | |
| Diaphragm type | JD-100 | | | Wheat flour, Soybean, Feed, Sugar, Sand, etc. |
| Float type | JF-25 | Liquids | Water | Clean water |
| | JF-32 | | Oil<br>Industrial liquid materials<br>Chemical solvent | Clean water, Waste water, Saline solution, Distilled water, Industrial chemical water, Cooking oil, Soybean oil, Heavy oil, Petroleum, Insulating oil, Mineral oil, Alcohol, Benzene, etc. |
| | JF-302T | | | |
| Lead Switch type | JRS-S | | | |
| | JRS-D | | | |

## Application examples

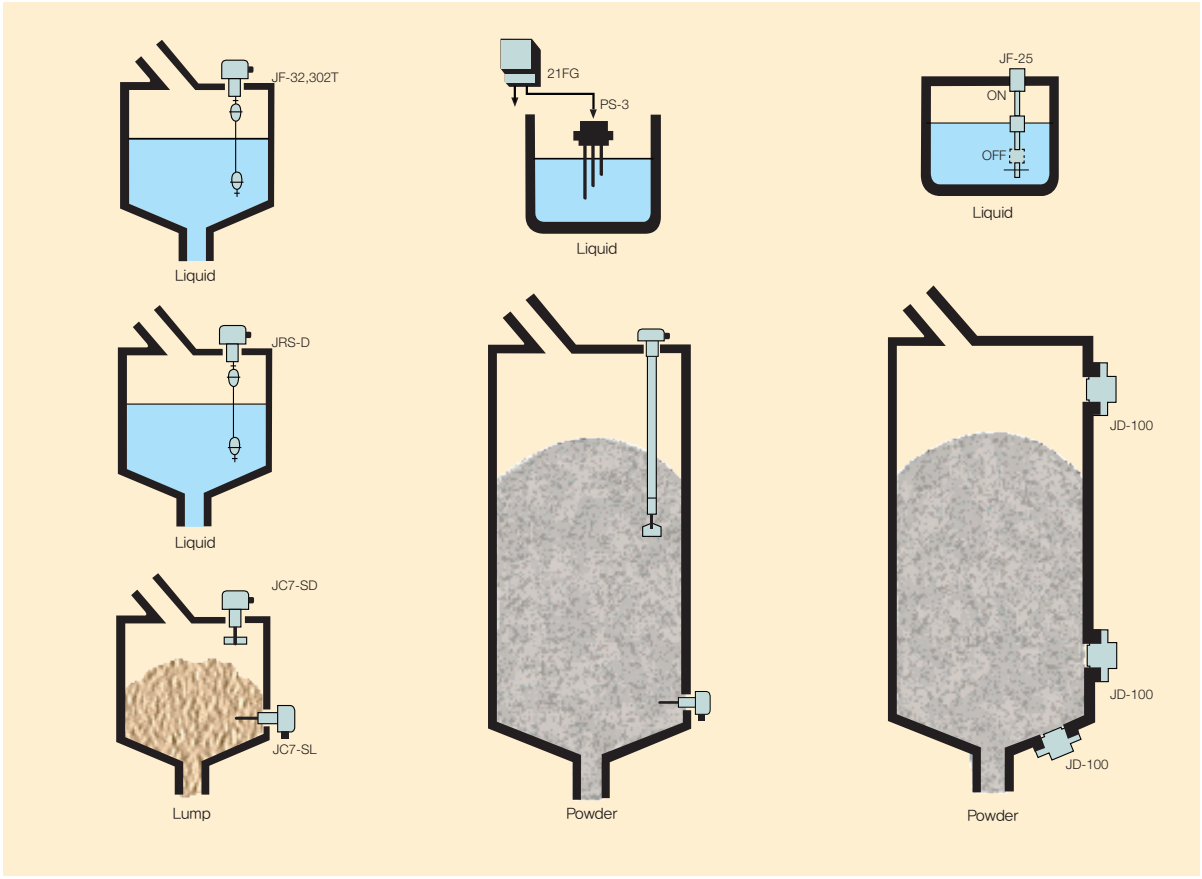




Tel: +45 63 12 83 00 | Email: ps@hymatik.com | www.hymatik.com | Hvidkaervej 27a, DK-5250 Odense SV, Denmark

# JB-SD Series

## Features

- A compact type product that can be easily maintained and repaired in small spaces
- Optimum for controlling powders and fine particles such as flour, wheat flour, sugar, and plastic materials
- Highly sensitive with built-in springs that can be adjusted to four levels
- Usable in various kinds of small hoppers such as grain tanks and rice husk tanks




## Specifications

| Item | Unit | JB-SD |
|---|---|---|
| Voltage | V | AC 110V, AC220V(50/60Hz) |
| Regulation of voltage | % | ±10 |
| Power consumption | W | When the wing turns: 3W |
| Contact point capacity | | AC 250V, 3A |
| Pressure used | | Atmospheric pressure (ATM) |
| Rotation speed | RPM | 6 |
| Torque | g/cm | 300~600 |
| Oprating Temperature | °C | 0~60 (Non-Condencing) |

## How to order

JB - SD - AC220V

| WorkingVoltage | |
|---|---|
| AC110V | AC110V |
| AC220V | AC220V |

## Dimensions

Unit: mm

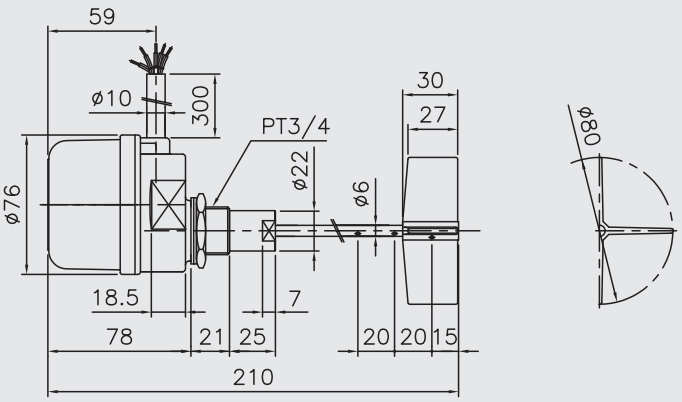


## Wiring

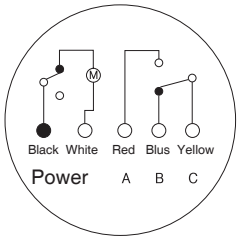




Tel: +45 63 12 83 00 | Email: ps@hymatik.com | www.hymatik.com | Hvidkaervej 27a, DK-5250 Odense SV, Denmark

# JC7 Series

## JC7-SD

Basic model



## JC7-SL

For lower level



## JC7-ST

For higher level

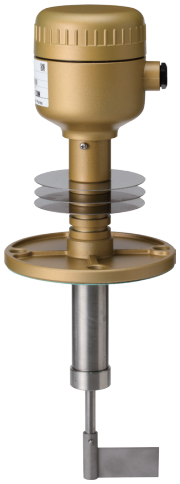

## JC7-SH

For heat resistance



## Features

- Using mechanical detection methods, these types are not affected by temperatures, humidity, gases, etc. in the tank
- Made with aluminum cases, these types can be installed and used outdoors

## Operation principle

- Operated with mechanical structures, JC7 series detect the heights of stored goods through the rotational movements of their wings
- The wings are rotated by the motor. When resistance is generated on the wings by stored goods, the two micro-switches are operated by the built-in cam.
- The first switch turns the control circuit on/off and the next switch turns off the motor to prevent motor overload

## Specifications

| Item | Unit | JC7 |
|---|---|---|
| Voltage | V | AC 110V, AC220V/50/60Hz |
| Regulation of voltage | % | ±10 |
| Power consumption | W | When the wing turns: 3 |
| Contact point capacity | | AC 250V, 3A |
| Pressure used | | Atmospheric pressure |
| Rotation speed | RPM | 6 |
| Torque | g/cm | 500~1000 |
| Weight | kg | 2.0kg, Heat radiating type (Separate weight for special products) |
| Ambient Temperature | °C | Standard type: 0~60 |
| | | For heat resistance: 0~120 |

## Wiring

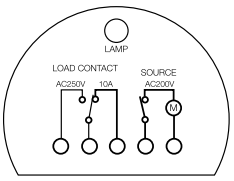


## How to order

JC7 - SD - AC220V N MM P

| Propellar Type | |
|---|---|
| SD | Two wings |
| SH | Oblique wing |
| SL | Half wing |
| ST | Half wing (for heat resistance) |

| Voltage | |
|---|---|
| AC110V | AC110V |
| AC220V | AC220V |

| Protection tube | |
|---|---|
| Blank | Non |
| P | Protection tube attached |

LENGTH

150~3000

100

| ~~Diaphragm material~~ | |
|---|---|
| 100~3,000 | SD |
| ~~200~3,000~~ | SH |
| 100~3,000 | SL |
| ~~200~~400 | ST |

Note) The detection rod length is the length from the bottom of the flange to the end of the wing.



Tel: +45 63 12 83 00 | Email: ps@hymatik.com | www.hymatik.com | Hvidkaervej 27a, DK-5250 Odense SV, Denmark

# Dimensions

Unit: mm

JC7-SD

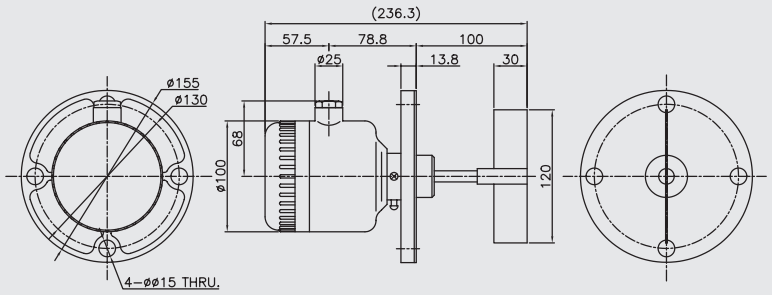


JC7-SL

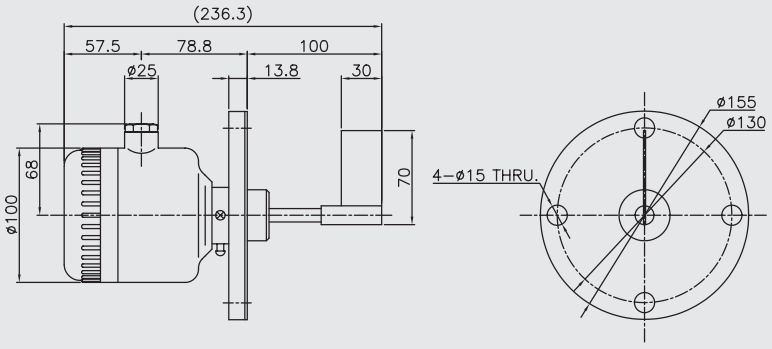


JC7-ST

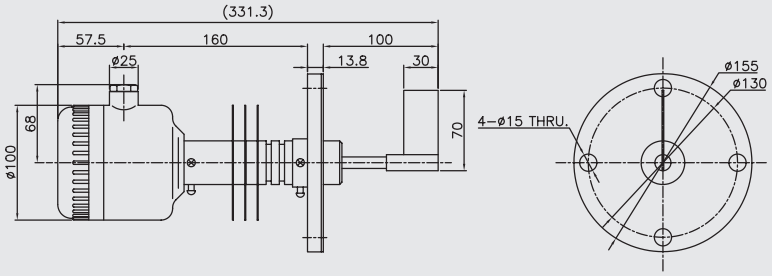


JC7-SH

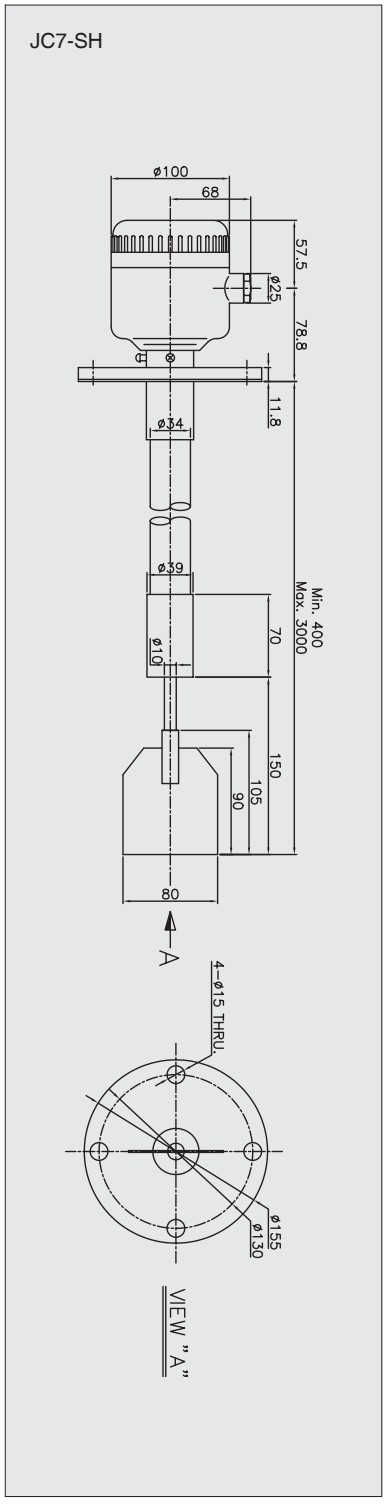




Tel: +45 63 12 83 00 | Email: ps@hymatik.com | www.hymatik.com | Hvidkaervej 27a, DK-5250 Odense SV, Denmark

# JD-100 Series

## JD-100

Basic model



## Features

- Sensitivity can be easily adjusted using an internal high strength spring
- Since the structure is simple, troubles occur rarely and maintenance is easy
- Easy handling and wiring

## Specifications

| Item | Unit | JD-100 |
|---|---|---|
| Contact point capacity | | AC 250V 5A, DC125V 0.5A |
| Pressure used | | Atmospheric pressure (ATM) |
| Torque | g/cm | 500~1000 |
| Operting Temperature | °C | 60 |
| Ambient Temperature | °C | 0~60 (Provided that, there should be no freezing) |

## Wiring

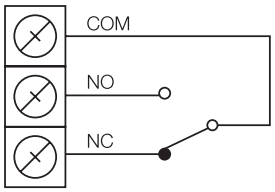


## Dimensions

Unit: mm

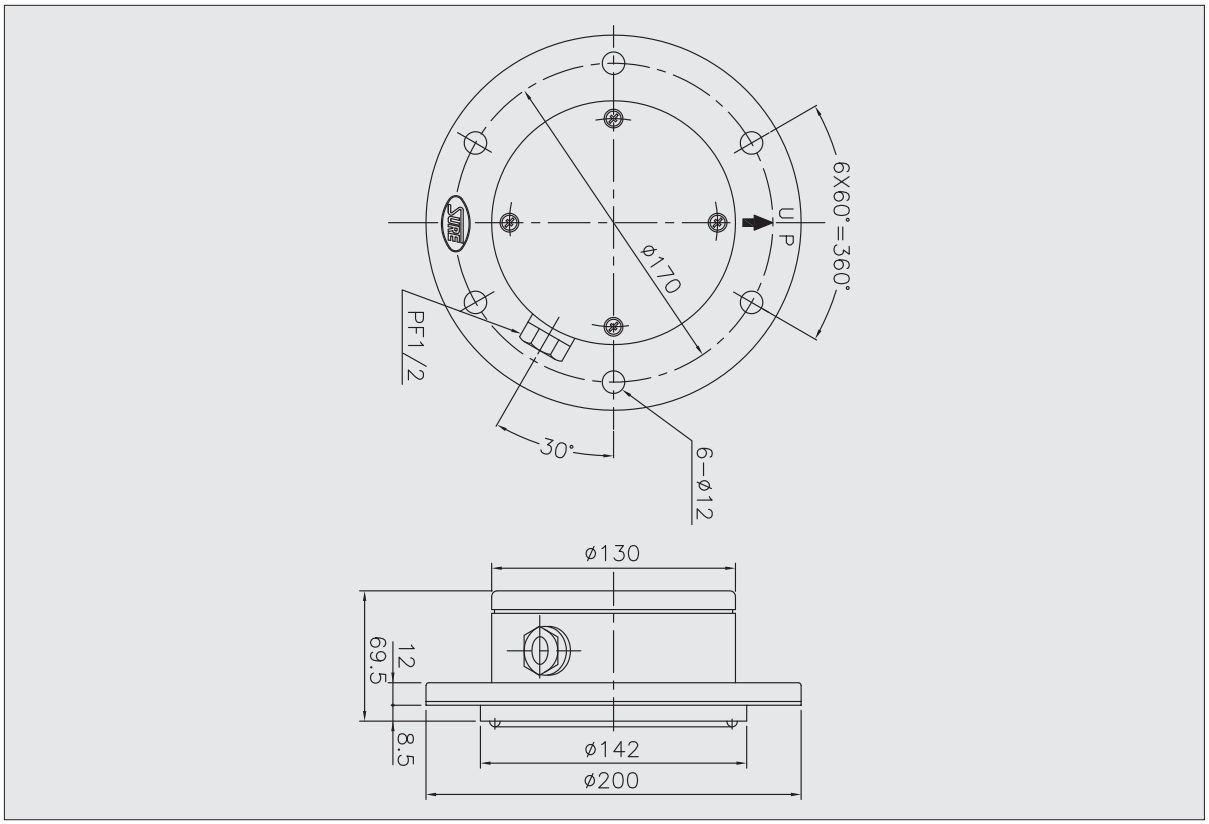

## Example of installation

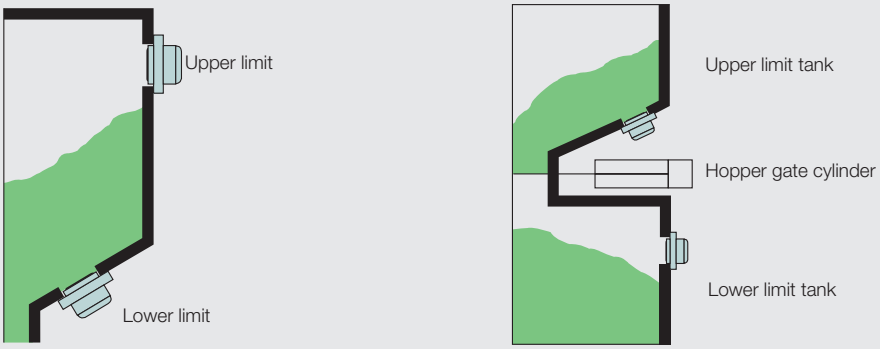


## Precautions for installation

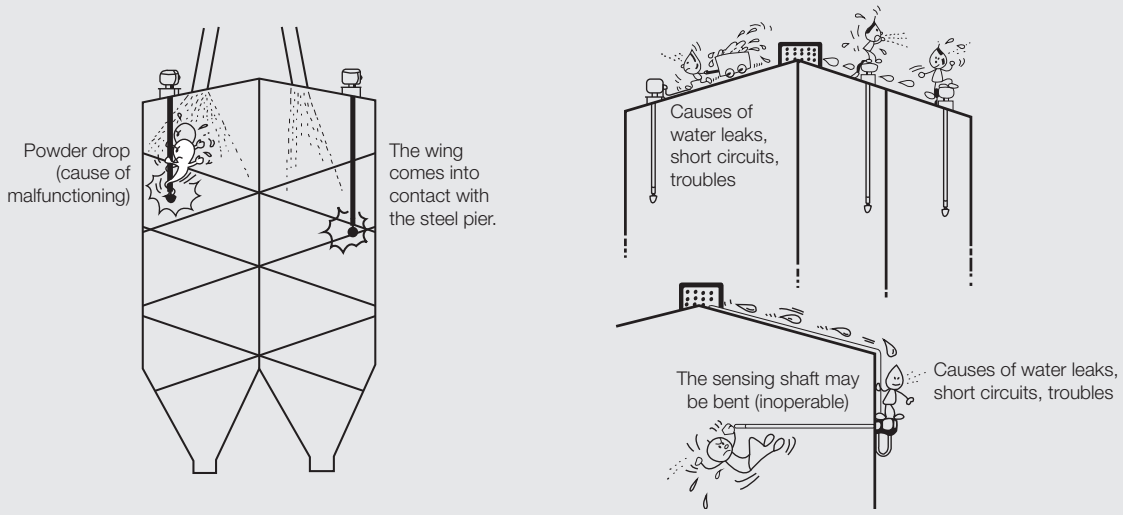


- Check the voltage of the power supply.
  The built-in small motor requires a predetermined voltage which cannot be adjusted.
- Carefully review places to be selected for installation
  -The wings should not come into contact with parts such as steel piers in silos or tanks
  -Avoid places where powder drops. Upper limit switches should be installed vertically to have the device exert its performance.
- When the switch has been installed outdoors, problems may easily occur in electric piping in particular. If the level switch is lower than the wiring duct as shown in the figure, rainwater many flow into the electric piping and into the main body of the level switch in rainy seasons. Therefore, please pay special attention to this matter.
- The level switch is mechanical and has a small built-in synchronous motor(torque: 0.1-1kgf/cm). Therefore, please be careful so that no foreign matter or impurities would go into the level switch while being installed.
- If pressure is applied to the diaphragm surface by powder in the silo or tank, the built-in micro-switch will operate due to the force. If there is no powder in the silo or tank, the switch will be automatically restored by the force of the built-in spring.
  When necessary, the internal spring's force may be adjusted to adjust the sensitivity.
- Caution
  Do not use this switch in use environments where the rubber diaphragm may be damaged.



Tel: +45 63 12 83 00 | Email: ps@hymatik.com | www.hymatik.com | Hvidkaervej 27a, DK-5250 Odense SV, Denmark

# JF Series

## Features

- Since these products operate regardless liquid resistance, these products are optimum for control the level of liquids such as clean water, waste water, saline solution, milk, heavy oil, diesel, cooking oil, etc.
- Not affected by the capacitance between external lead wires and can be operated remotely.
- Can be installed outdoors because a water proof main body cover is employed.
- Floats for organic solvents such as gasoline, heavy oil, benzene, and alcohol can be manufactured
- Can be used for single phase and three phase

**JF-32**

Plastic floater



**JF-302T**

STS floater



## Specifications

| Item | JF-32 | JF-302T |
|---|---|---|
| Rated contact point capacity | AC250V 10A | |
| Frequency | 50/60Hz | |
| Usable control range | 0.18~10M | |
| Air pressure in the water tank | 1 Atmosphere | |
| Usable temperature range | 0~50°C | 0~120°C |
| Rod material | Resin | STS 304 |
| Scope of applicable fluids | Clean water, waste water, saline solution, corrosive liquids | Milk, heavy oil, diesel, cooking oil, benzene, alcohol, etc. |

## Dimensions

Unit: mm

JF-32

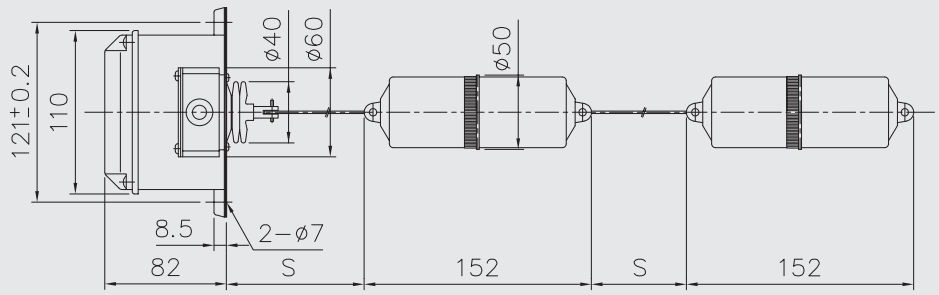


JF-302T

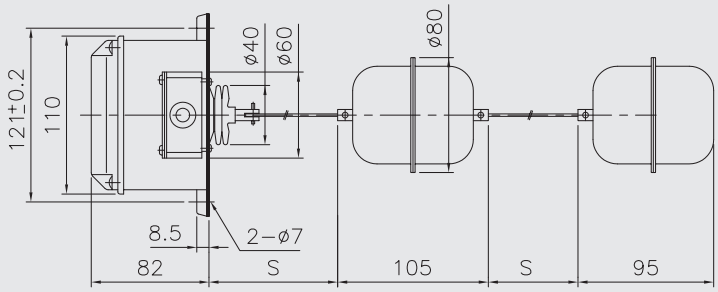

## Liquid specific gravity table

| | |
|---|---|
| Water | 1.0 |
| Sea water | 1.01~1.05 |
| Diesel | 0.83~0.88 |
| Heavy oil | 0.85~0.9 |

## Contact point rated capacity

JF32-JF-302T

| | |
|---|---|
| AC110~125V | 10A |
| AC220~250V | 10A |
| AC440~480V | 3A |
| AC600V | 2A |

21FG

| | |
|---|---|
| AC110~125V | 5A |
| AC220~250V | 4A |

The above written rated capacities are values for resistive loads (cos ø ≒ 1). In the case of inductive loads, the rated capacities may be regarded as 1/2 of the above written values.

## How to use and matters to be attended

External connection diagram
(water supply/three phase)

- When using for water drainage, use terminal B instead of terminal A.
- Ensure that the float would not be shaken by water flows or impacts
- This is suitable for level control that operates regardless of drained liquids' resistance
- Not affected by external induction or capacitance between wires and easily operated remotely.

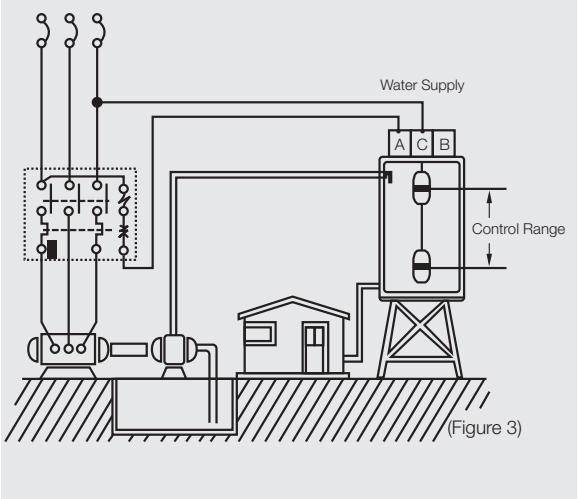

(Figure 3)

Diagram of connection for pump idling prevention, alarms, and water supply control

- Please use JF-32 type floats at temperatures not exceeding 50°C because they are made of synthetic resins. Use JF-302T floats made of a stainless steel rod for high temperatures

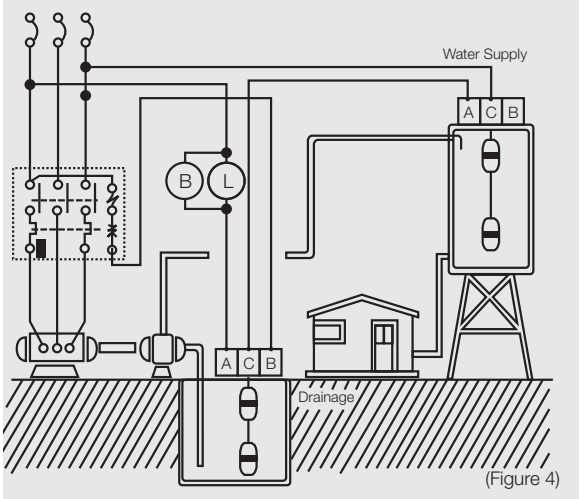

(Figure 4)



Tel: +45 63 12 83 00 | Email: ps@hymatik.com | www.hymatik.com | Hvidkaervej 27a, DK-5250 Odense SV, Denmark

# JRS Series

## Features

- Detection balls and detection rods are completely enclosed and thus the products are not affected by pressure, vacuum, or gases
- The lead switch is enclosed in a glass tube containing inert gas and thus the products operate safely in combustible gases
- When the detection ball moves up and down due to buoyancy, the lead switches fixed to the upper/lower limit contact point positions are sensed.
- Can be used for simultaneous control of water supply/ drainage or alarms for water shortage/full water by additionally installing electrode type level switches (21F-G)
- In particular, types with the control unit not built in the products can be used in regions with the risk of explosion or cases where the location of detection is far away from the location of control by installing the power supply part and the amplification part separately
- Depending on connections, either N.C or N.O can be used or both can be used.

**JRS-S**
One detection ball



**JRS-D**
Two detection ball



## Specifications (built-in type)

| Item | JRS-S | JRS-D |
|---|---|---|
| Power supply/voltage | AC110V, AC220V/50/60Hz | |
| Voltage fluctuation range | ±10% | |
| Power consumption | 2VA | |
| Contact point capacity | AC250V 3A | |
| Internal pressure | 7kgf/cm2 | |
| Insulation resistance | At least 100 Ω DC 500V MEGA | |
| Life | Electric: at least 500,000 times / Mechanical: at least 5,000,000 times | |
| Workable temperature range | 0-80°C (Non Condencing) | |



Tel: +45 63 12 83 00 | Email: ps@hymatik.com | www.hymatik.com | Hvidkaervej 27a, DK-5250 Odense SV, Denmark

## How to order

JRS - S - I - ① - ② - ③ - ④ - ⑤

| ①. Number of detection balls | |
|---|---|
| S | One detection ball |
| D | Two detection balls |

| ②. Control unit | |
|---|---|
| I | Built-in control unit |
| O | Control unit not built in |

| ③. Total length (Enter the dimension of L in dimension) | |
|---|---|
| S | 80~ |
| D | 80~ |

| ④. Upper limit contact point position (Enter the dimension of L3 in dimension) | |
|---|---|
| S | 80~ |
| D | 80~ |

| ⑤. Lower limit contact point position (Enter the dimension of L1 in dimension) | |
|---|---|
| S | Blank |
| D | 60~ |

## Dimensions (built-in type/exterior type)

Unit: mm

JRS-S

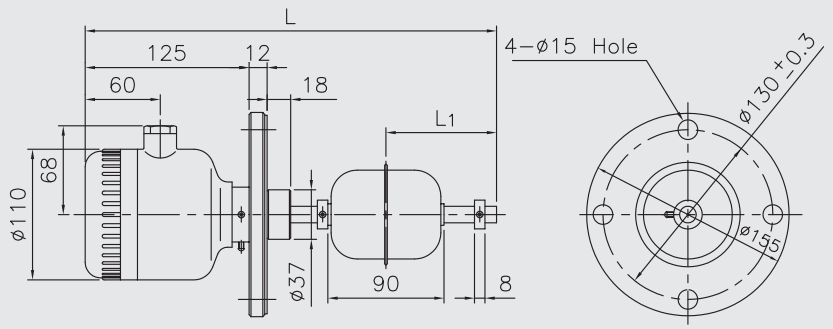


JRS-D

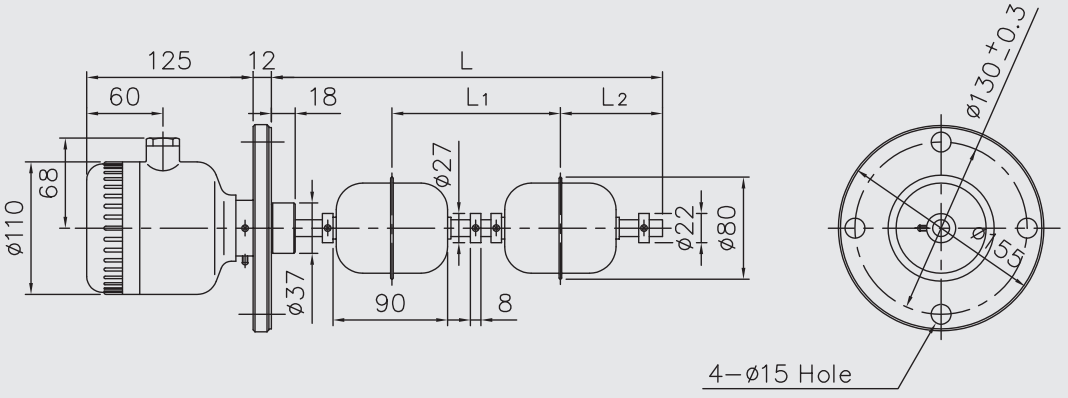




Tel: +45 63 12 83 00 | Email: ps@hymatik.com | www.hymatik.com | Hvidkaervej 27a, DK-5250 Odense SV, Denmark

## Wiring

**Built-in type**

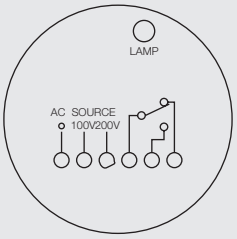


**Exterior type**

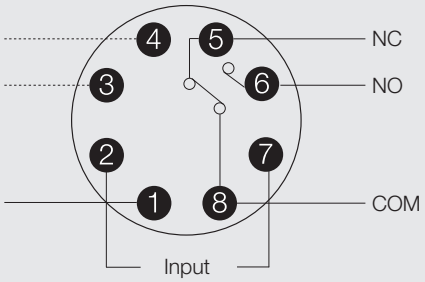


## Example of use

JRS-DO connection diagram

*Electrode type level switches (21F-G) may be additionally installed to simultaneously control water supply/drainage

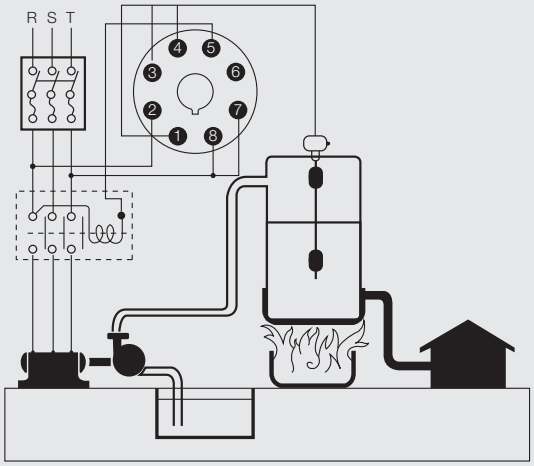


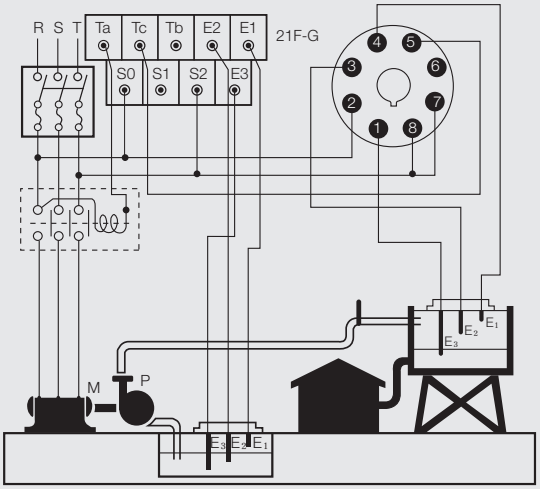




Tel: +45 63 12 83 00 | Email: ps@hymatik.com | www.hymatik.com | Hvidkaervej 27a, DK-5250 Odense SV, Denmark

# OFFER OF SALE

The items described in this document and other documents and descriptions provided by Parker Hannifin Corporation, its subsidiaries and its authorized distributors ("Seller") are hereby offered for sale at prices to be established by Seller. This offer and its acceptance by any customer ("Buyer") shall be governed by all of the following Terms and Conditions. Buyer's order for any item described in its document, when communicated to Seller verbally, or in writing, shall constitute acceptance of this offer. All goods, services or work described will be referred to as "Products".

1. **Terms and Conditions.** Seller's willingness to offer Products, or accept an order for Products, to or from Buyer is subject to these Terms and Conditions or any newer version of the terms and conditions found on-line at www.parker.com/saleterms/. Seller objects to any contrary or additional terms or conditions of Buyer's order or any other document issued by Buyer.
2. **Price Adjustments; Payments.** Prices stated on Seller's quote or other documentation offered by Seller are valid for 30 days, and do not include any sales, use, or other taxes unless specifically stated. Unless otherwise specified by Seller, all prices are F.C.A. Seller's facility (INCOTERMS 2010). Payment is subject to credit approval and is due 30 days from the date of invoice or such other term as required by Seller's Credit Department, after which Buyer shall pay interest on any unpaid invoices at the rate of 1.5% per month or the maximum allowable rate under applicable law.
3. **Delivery Dates;** Title and Risk; Shipment. All delivery dates are approximate and Seller shall not be responsible for any damages resulting from any delay. Regardless of the manner of shipment, title to any products and risk of loss or damage shall pass to Buyer upon placement of the products with the shipment carrier at Seller's facility. Unless otherwise stated, Seller may exercise its judgment in choosing the carrier and means of delivery. No deferment of shipment at Buyers' request beyond the respective dates indicated will be made except on terms that will indemnify, defend and hold Seller harmless against all loss and additional expense. Buyer shall be responsible for any additional shipping charges incurred by Seller due to Buyer's acts or omissions.
4. **Warranty.** Seller warrants that the Products sold hereunder shall be free from defects in material or workmanship for a period of twelve months from the date of delivery to Buyer or 2,000 hours of normal use, whichever occurs first. The prices charged for Seller's products are based upon the exclusive limited warranty stated above, and upon the following disclaimer: DISCLAIMER OF WARRANTY: THIS WARRANTY COMPRISES THE SOLE AND ENTIRE WARRANTY PERTAINING TO PRODUCTS PROVIDED HEREUNDER. SELLER DISCLAIMS ALL OTHER WARRANTIES, EXPRESS AND IMPLIED, INCLUDING DESIGN, MERCHANTABILITY AND FITNESS FOR A PARTICULAR PURPOSE.
5. **Claims;** Commencement of Actions. Buyer shall promptly inspect all Products upon delivery. No claims for shortages will be allowed unless reported to the Seller within 10 days of delivery. No other claims against Seller will be allowed unless asserted in writing within 30 days after delivery. Buyer shall notify Seller of any alleged breach of warranty within 30 days after the date the defect is or should have been discovered by Buyer. Any action based upon breach of this agreement or upon any other claim arising out of this sale (other than an action by Seller for an amount due on any invoice) must be commenced within 12 months from the date of the breach without regard to the date breach is discovered.
6. **LIMITATION OF LIABILITY.** UPON NOTIFICATION, SELLER WILL, AT ITS OPTION, REPAIR OR REPLACE A DEFECTIVE PRODUCT, OR REFUND THE PURCHASE PRICE. IN NO EVENT SHALL SELLER BE LIABLE TO BUYER FOR ANY SPECIAL, INDIRECT, INCIDENTAL OR CONSEQUENTIAL DAMAGES ARISING OUT OF, OR AS THE RESULT OF, THE SALE, DELIVERY, NON-DELIVERY, SERVICING, USE OR LOSS OF USE OF THE PRODUCTS OR ANY PART THEREOF, OR FOR ANY CHARGES OR EXPENSES OF ANY NATURE INCURRED WITHOUT SELLER'S WRITTEN CONSENT, EVEN IF SELLER HAS BEEN NEGLIGENT, WHETHER IN CONTRACT, TORT OR OTHER LEGAL THEORY. IN NO EVENT SHALL SELLER'S LIABILITY UNDER ANY CLAIM MADE BY BUYER EXCEED THE PURCHASE PRICE OF THE PRODUCTS.
7. **User Responsibility.** The user, through its own analysis and testing, is solely responsible for making the final selection of the system and Product and assuring that all performance, endurance, maintenance, safety and warning requirements of the application are met. The user must analyze all aspects of the application and follow applicable industry standards and Product information. If Seller provides Product or system options, the user is responsible for determining that such data and specifications are suitable and sufficient for all applications and reasonably foreseeable uses of the Products or systems.
8. **Loss to Buyer's Property.** Any designs, tools, patterns, materials, drawings, confidential information or equipment furnished by Buyer or any other items which become Buyer's property, will be considered obsolete and may be destroyed by Seller after two consecutive years have elapsed without Buyer ordering the items manufactured using such property. Seller shall not be responsible for any loss or damage to such property while it is in Seller's possession or control.
9. **Special Tooling.** A tooling charge may be imposed for any special tooling, including without limitation, dies, fixtures, molds and patterns, acquired to manufacture Products. Such special tooling shall be and remain Seller's property notwithstanding payment of any charges by Buyer. In no event will Buyer acquire any interest in apparatus belonging to Seller which is utilized in the manufacture of the Products, even if such apparatus has been specially converted or adapted for such manufacture and notwithstanding any charges paid by Buyer. Unless otherwise agreed, Seller shall have the right to alter, discard or otherwise dispose of any special tooling or other property in its sole discretion at any time.
10. **Buyer's Obligation;** Rights of Seller. To secure payment of all sums due or otherwise, Seller shall retain a security interest in the goods delivered and this agreement shall be deemed a Security Agreement under the Uniform Commercial Code. Buyer authorizes Seller as its attorney to execute and file on Buyer's behalf all documents Seller deems necessary to perfect its security interest.
11. **Improper use and Indemnity.** Buyer shall indemnify, defend, and hold Seller harmless from any claim, liability, damages, lawsuits, and costs (including attorney fees), whether for personal injury, property damage, patent, trademark or copyright infringement or any other claim, brought by or incurred by Buyer, Buyer's employees, or any other person, arising out of: (a) improper selection, improper application or other misuse of Products purchased by Buyer from Seller; (b) any act or omission, negligent or otherwise, of Buyer; (c) Seller's use of patterns, plans, drawings, or specifications furnished by Buyer to manufacture Product; or (d) Buyer's failure to comply with these terms and conditions. Seller shall not indemnify Buyer under any circumstance except as otherwise provided.
12. **Cancellations and Changes.** Orders shall not be subject to cancellation or change by Buyer for any reason, except with Seller's written consent and upon terms that will indemnify, defend and hold Seller harmless against all direct, incidental and consequential loss or damage. Seller may change product features, specifications, designs and availability with notice to Buyer.
13. **Limitation on Assignment.** Buyer may not assign its rights or obligations under this agreement without the prior written consent of Seller.
14. **Force Majeure.** Seller does not assume the risk and shall not be liable for delay or failure to perform any of Seller's obligations by reason of circumstances beyond the reasonable control of Seller (hereinafter "Events of Force Majeure"). Events of Force Majeure shall include without limitation: accidents, strikes or labor disputes, acts of any government or government agency, acts of nature, delays or failures in delivery from carriers or suppliers, shortages of materials, or any other cause beyond Seller's reasonable control.
15. **Waiver and Severability.** Failure to enforce any provision of this agreement will not waive that provision nor will any such failure prejudice Seller's right to enforce that provision in the future. Invalidation of any provision of this agreement by legislation or other rule of law shall not invalidate any other provision herein. The remaining provisions of this agreement will remain in full force and effect.
16. **Termination.** Seller may terminate this agreement for any reason and at any time by giving Buyer thirty (30) days written notice of termination. Seller may immediately terminate this agreement, in writing, if Buyer: (a) commits a breach of any provision of this agreement (b) appointments a trustee, receiver or custodian for all or any part of Buyer's property (c) files a petition for relief in bankruptcy on its own behalf, or by a third party (d) makes an assignment for the benefit of creditors, or (e) dissolves or liquidates all or a majority of its assets.
17. **Governing Law.** This agreement and the sale and delivery of all Products hereunder shall be deemed to have taken place in and shall be governed and construed in accordance with the laws of the State of Ohio, as applicable to contracts executed and wholly performed therein and without regard to conflicts of laws principles. Buyer irrevocably agrees and consents to the exclusive jurisdiction and venue of the courts of Cuyahoga County, Ohio with respect to any dispute, controversy or claim arising out of or relating to this agreement.
18. **Indemnity for Infringement of Intellectual Property Rights.** Seller shall have no liability for infringement of any patents, trademarks, copyrights, trade dress, trade secrets or similar rights except as provided in this Section. Seller will defend and indemnify Buyer against allegations of infringement of U.S. patents, U.S. trademarks, copyrights, trade dress and trade secrets ("Intellectual Property Rights"). Seller will defend at its expense and will pay the cost of any settlement or damages awarded in an action brought against Buyer based on an allegation that a Product sold pursuant to this Agreement infringes the Intellectual Property Rights of a third party. Seller's obligation to defend and indemnify Buyer is contingent on Buyer notifying Seller within ten (10) days after Buyer becomes aware of such allegations of infringement, and Seller having sole control over the defense of any allegations or actions including all negotiations for settlement or compromise. If a Product is subject to a claim that it infringes the Intellectual Property Rights of a third party, Seller may, at its sole expense and option, procure for Buyer the right to continue using the Product, replace or modify the Product so as to make it noninfringing, or offer to accept return of the Product and return the purchase price less a reasonable allowance for depreciation. Notwithstanding the foregoing, Seller shall have no liability for claims of infringement based on information provided by Buyer, or directed to Products delivered hereunder for which the designs are specified in whole or part by Buyer, or infringements resulting from the modification, combination or use in a system of any Product sold hereunder. The foregoing provisions of this Section shall constitute Seller's sole and exclusive liability and Buyer's sole and exclusive remedy for infringement of Intellectual Property Rights.
19. **Entire Agreement.** This agreement contains the entire agreement between the Buyer and Seller and constitutes the final, complete and exclusive expression of the terms of sale. All prior or contemporaneous written or oral agreements or negotiations with respect to the subject matter are herein merged.
20. **Compliance with Law, U. K. Bribery Act and U.S. Foreign Corrupt Practices Act.** Buyer agrees to comply with all applicable laws and regulations, including both those of the United Kingdom and the United States of America, and of the country or countries of the Territory in which Buyer may operate, including without limitation the U. K. Bribery Act, the U.S. Foreign Corrupt Practices Act ("FCPA") and the U.S. Anti-Kickback Act (the "Anti-Kickback Act"), and agrees to indemnify and hold harmless Seller from the consequences of any violation of such provisions by Buyer, its employees or agents. Buyer acknowledges that they are familiar with the provisions of the U. K. Bribery Act, the FCPA and the Anti-Kickback Act, and certifies that Buyer will adhere to the requirements thereof. In particular, Buyer represents and agrees that Buyer shall not make any payment or give anything of value, directly or indirectly to any governmental official, any foreign political party or official thereof, any candidate for foreign political office, or any commercial entity or person, for the purpose of influencing such person to purchase products or otherwise benefit the business of Seller.

# Parker Asia Pacific

## China
**Sales Office**
Shanghai office, 86-21-28995000
Parker Hannifin Motion&Control Co. Ltd.
280 Yunqiao Road, Jin Qiao Export Processing Zone,
Shanghai 201206, China

**Sales Office**
Guangzhou Office, 86-20 32121688
Parker Hannifin Motion&Control Co.Ltd.
Room 202, Building F, Guangdong Soft Science Park,
No 11, Caipin Road, Guangzhou Science City, Luo
Gang District, Guangzhou 510663, China

**Sales Office**
Beijing office, 86-10-6561-0520
Parker Hannifin Motion&Control Co.Ltd.
Suite 8B01, 8th Floor, Hanwei Plaza,7 Guanghua
Road, Chaoyang District, Beijing 100004, P.R.China

**Automation Division**
WUXI plant, 86-510-8116-7000
Parker Hannifin Motion and Control (Wuxi) Company Ltd.
No.200, Furong Zhong Si Lu, Xishan Economic
Development Zone, Wuxi 214101, Jiangsu, China

## Japan
**Sales Office**
Totsuka Office, 81-45-870-1510
Parker Hannifin Japan Ltd.
626 Totsuka-cho, Totsuka-ku, Yokohama-shi,
Kanagawa, 244-0003 Japan

**Automation Division**
Asahi Plant, 81-479-64-2282
Kuroda Pneumatics LTD
10243 Kamakazu, Asahi-shi, Chiba 289-2505 Japan

## Korea
**Sales Office**
Ga San Office, 822-6344-0100
Parker Hannifin Korea Automation Office
13F Jei Platz B/D , 459-11 Gasan-dong, Geumcheon-
gu, Seoul

**Automation Division**
Jang An Plant, 82 31-359-0700
Parker Korea Ltd.
759-10 Geumui-ri, Jangan-myeon, Hwaseong-si,
Gyeonggi-do, 445-941, Korea

## India
**Sales Office**
PHI Chennai Sales office, 91-44-43910799
Parker Hannifin India Private. Limited,
Plot no. P41/2, Eight Avenue, Domestic Tariff Area,
Mahindra world city, Chengalpattu, Kanchipuram
District, Pin : 603002, Tamil Nadu, India

**Automation Division**
PHI Chennai MWC Plant, 91-44-43910703
Parker Hannifin India Private. Limited,
Plot no. P41/2, Eight Avenue, Domestic Tariff Area,
Mahindra world city, Chengalpattu, Kanchipuram
District, Pin : 603002, Tamil Nadu, India

## Taiwan
**Sales Office**
Taipei Office, 886-2-22988987
Parker Hannifin Taiwan Co., Ltd.
8F., No.22 Wuquan 7th Road., Wugu Dist., New Taipei City, 248,
Taiwan (R.O.C)

## Thailand
**Sales Office**
Bangkok Office, (66) 2 186 7000
Parker Hannifin (Thailand) Co., Ltd.
1265 Rama 9 Road, Suanluang Bangkok 10250 Thailand

## Singapore
**Sales Office**
Office: +65 6887 6300
Parker Hannifin Singapore Pte Ltd.
11th Fourth Chin Bee Road Singapore 619702

## Malaysia
**Sales Office**
Selangor Office, +603 7849 0800
Parker Hannifin Industrial (M) Sdn Bhd
No.11 Persiaran Pasak Bumi
Seksyen U8, Bukit Jelutong Industrial Park
40150 Shah Alam, Selangor, Malaysia

## Indonesia
**Sales Office**
Office: +62 21 7588 1906
P.T. Parker Hannifin Indonesia
Techno Park Block G3/15-16 BSD (Bumi Serpong Damai)
Tangerang, 15314 Indonesia

## Vietnam
**Sales Office**
Office: (84) 8 3999 1600
Parker Hannifin Vietnam Co., Ltd.
No. 43R/10 Ho Van Hue Street,, Ward 9,
Phu Nhuan District, Ho Chi Minh City, Vietnam

## Australia
**Sales Office**
Office: 61-(0)2-9634-7777
Parker Hannifin (Australia) Pty Limited
9 Carrington Road, Castle Hill, NSW 2154

This catalogue is offered to you by;

© 2013 Parker Hannifin Corporation
6. 2013