

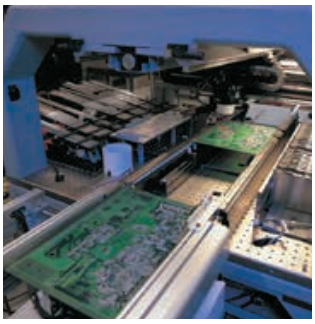







Air Bellows

9109, Removable type - Ø70 to Ø660 mm
SP, Crimped type - Ø135 to Ø350 mm

Catalogue PDE2576TCUK



Parker

ENGINEERING YOUR SUCCESS.

Important
Before attempting any external or internal work on the cylinder or any connected components, make sure the cylinder is vented and disconnect the air supply in order to ensure isolation of the air supply.

Note
All technical data in this catalogue are typical data only.
Air quality is essential for maximum cylinder service life (see ISO 8573).

WARNING

FAILURE OR IMPROPER SELECTION OR IMPROPER USE OF THE PRODUCTS AND/OR SYSTEMS DESCRIBED HEREIN OR RELATED ITEMS CAN CAUSE DEATH, PERSONAL INJURY AND PROPERTY DAMAGE.
This document and other information from Parker Hannifin Corporation, its subsidiaries and authorized distributors provide product and/or system options for further investigation by users having technical expertise. It is important that you analyze all aspects of your application and review the information concerning the product or system in the current product catalog. Due to the variety of operating conditions and applications for these products or systems, the user, through its own analysis and testing, is solely responsible for making the final selection of the products and systems and assuring that all performance, safety and warning requirements of the application are met. The products described herein, including without limitation, product features, specifications, designs, availability and pricing, are subject to change by Parker Hannifin Corporation and its subsidiaries at any time without notice.

SALE CONDITIONS
The items described in this document are available for sale by Parker Hannifin Corporation, its subsidiaries or its authorized distributors. Any sale contract entered into by Parker will be governed by the provisions stated in Parker's standard terms and conditions of sale (copy available upon request).

Contents

Removable Air Bellows 9109 Series

Applications 4
Choosing the right air bellows for your application ... 6 - 7
Bellows materials 8
Air Bellows temperature ranges 8
Air Bellows resistances 8
Overview 9
Technical specification 10
Air Bellows material specification 10
Order codes 11
Air Bellows permissible misalignment 12
Vibration isolation 13
Mountings on end plate 14
Mounting dimensions ..... 14 - 15

Removable Air Bellows - Type x convolution

2.3/4" x 1 (Aluminium) 16
2.3/4" x 2 (Aluminium) 17
2.3/4" x 3 (Aluminium) 18
4.1/2" x 1 (Aluminium) 19
4.1/2" x 2 (Aluminium) 20
4.1/2" x 3 (Aluminium) 21
6" x 1 (Aluminium) 22
6" x 2 (Aluminium) 23
6" x 3 (Aluminium) 24
6" x 1 (Steel or Stainless steel) 25
6" x 2 (Steel or Stainless steel) 26
6" x 3 (Steel or Stainless steel) 27
8" x 1 (Steel or Stainless steel) 28
8" x 2 (Steel or Stainless steel) 29
8" x 3 (Steel or Stainless steel) 30
10" x 1 (Steel or Stainless steel) 31
10" x 2 (Steel or Stainless steel) 32
10" x 3 (Steel or Stainless steel) 33
12" x 1 (Steel or Stainless steel) 34
12" x 2 (Steel or Stainless steel) 35
12" x 3 (Steel or Stainless steel) 36
4.1/2" x 1 (Steel or Stainless steel) 37
4.1/2" x 2 (Steel or Stainless steel) 38
4.1/2" x 3 (Steel or Stainless steel) 39
16" x 1 (Steel or Stainless steel) 40
16" x 2 (Steel or Stainless steel) 41
16" x 3 (Steel or Stainless steel) 42
21.1/2" x 2 (Aluminium) 43
26" x 2 (Steel) 44

Crimped Air Bellows SP Series

Overview 47
Technical specification 48
Air Bellows material specification 48
Order codes 49
Air Bellows permissible misalignment 50
Vibration isolation 51
Mountings on end plate 52
Mounting dimensions 52

Crimped Air Bellows - Type x convolution

6" x 1 (Steel) 53
6.1/2" x 1 (Steel) 54
8" x 1 (Steel) 55
10" x 1 (Steel) 56
13" x 1 (Steel) 57
16" x 1 (Steel) 58
6" x 2 (Steel) 59
6.1/2" x 2 (Steel) 60
7" x 2 (Steel) 61
8" x 2 (Steel) 62
10" x 2 (Steel) 63
13" x 2 (Steel) 64
16" x 2 (Steel) 65

Parker Hannifin Corporation
Pneumatic Division - Europe

Tel: +45 63 12 83 00 | Email: ps@hymatik.com | www.hymatik.com | Hvidkaervej 27a, DK-5250 Odense SV, Denmark

Air Bellows used as an actuator

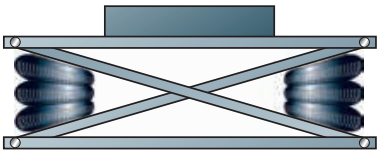

Scissor lift

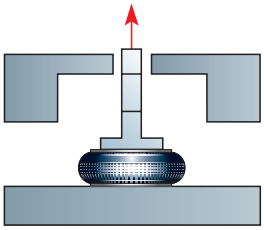

Direct force

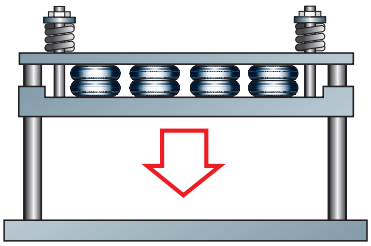

Hot foil stamping press

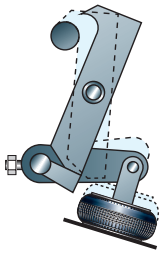

Quick lock device

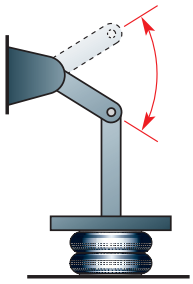

Short stroke mechanical linkage

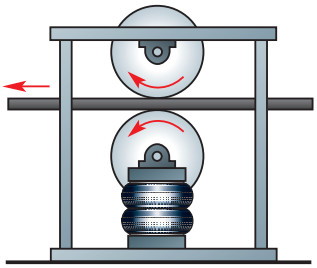

Roller tensioning

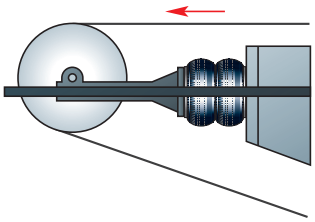

Reel tensioning

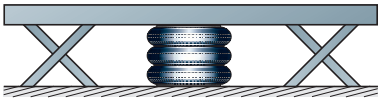

Platform lift

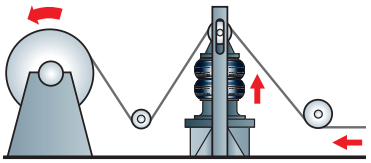

Web tensioning device

Air Bellows used as an isolator

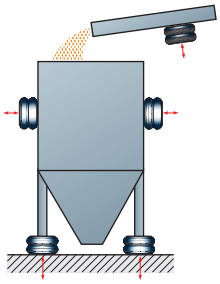

Hopper vibration and damping

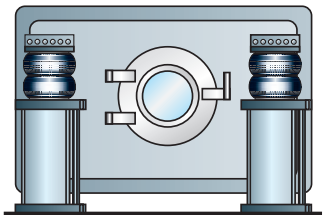

Commercial laundry machine

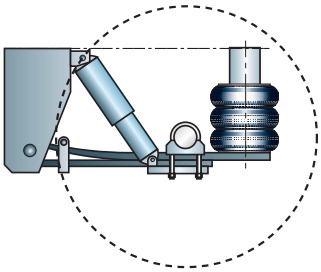

Wheel suspension

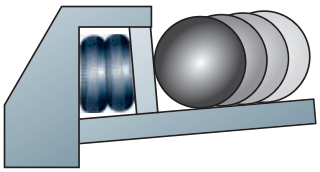

Mechanical handling stop

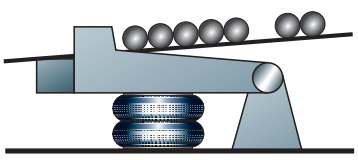

Impact absorbtion

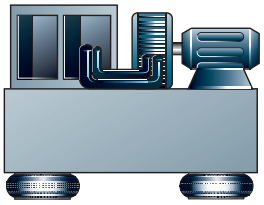

Machine isolation









9109 & SP Air Bellows Series

Removable and Crimped Types



Air Bellows are the ideal choice for applications requiring short stroke, high thrust single acting actuators. Manufactured from fabric reinforced synthetic rubber in one, two or three convolutions according to stroke and model. They incorporate no reciprocating metal parts and so provide virtually frictionless thrust compared with conventional pneumatic cylinders. All models are single acting only. The return stroke is provided in part by the natural spring action of the bellows but more usually by the load itself. The simplicity of construction provides an extremely long, virtually maintenance-free service life even under arduous conditions. Air Bellows are suitable for vibration applications i.e. device feeders at high frequency.

- **High thrust and frictionless movement**
- **No maintenance or lubrification, oil free**
- **Short stroke for high force application**
- **Easy to install, no precise alignment**
- **Easy to work**
- **Single acting use as a cylinder**
- **High isolation level, use as an isolator**

Choosing the right air bellows for your application

All the important data are shown in the graphs for each air bellows type and size.

The isobars curves, from 1 to 8 bar, gives at a constant working pressure the force over the height (stroke) of the air bellows. The volume curve indicates the volume inside the air bellow at the respective heights.
In the gray area there is considerable stress put on the bellow, we recommend not to use it in that section or by consulting your local technical support.

The permitted operating heights are on the X-axis from H minimum to H maximal. The recommended working height H, when the air bellow is used as an actuator, and the recommended working height H2, when the air bellow is used as an isolator, are shown in the chart below each graph. (refer to next pages for more details)

Adiabatic characteristic curves / Dynamic movements

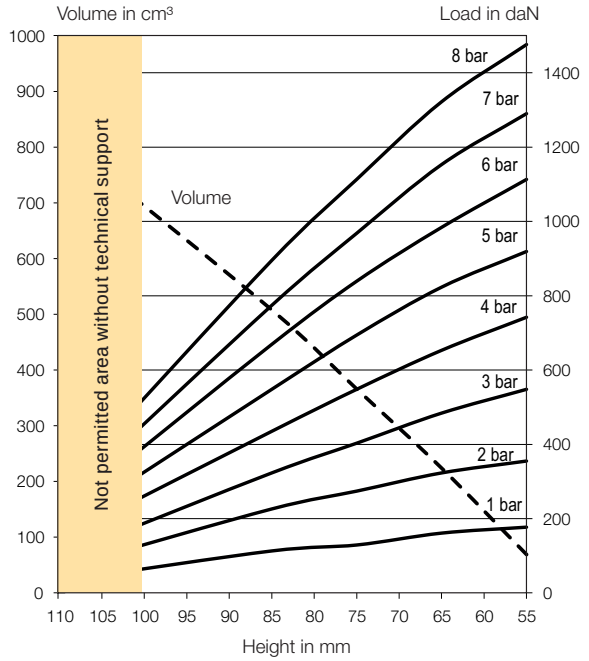

Determining the force for a a specific stroke

What is the force of an air bellow with a stroke of 20 mm and a working pressure of 6 bar?

Minimum operating height 55 mm (X-axis right side)
Stroke of 20 mm
55 + 20 = 75 mm
75 < maximum height of 100 mm

Drawn a vertical line through 75 mm height till it intersects the 6 Iso bar curve and then drawn an horizontal line to the right side of the graph to read the force, almost 840 daN

Determining the volume for a a specific stroke

Drawn an horizontal line at the minimum height 55 mm that intersects the volume curve for reading on the left the volume
V1 = 85 cm^3

Do same for height of 75 mm for knowing the volume
V2 = 380 cm^3

Air consumption
L [l] = V2(p2+pa)/pa - V1(p1+pa)/pa
L = 0,38(4+1)/1 - 0,085(0+1)/1 = 1,81 litre

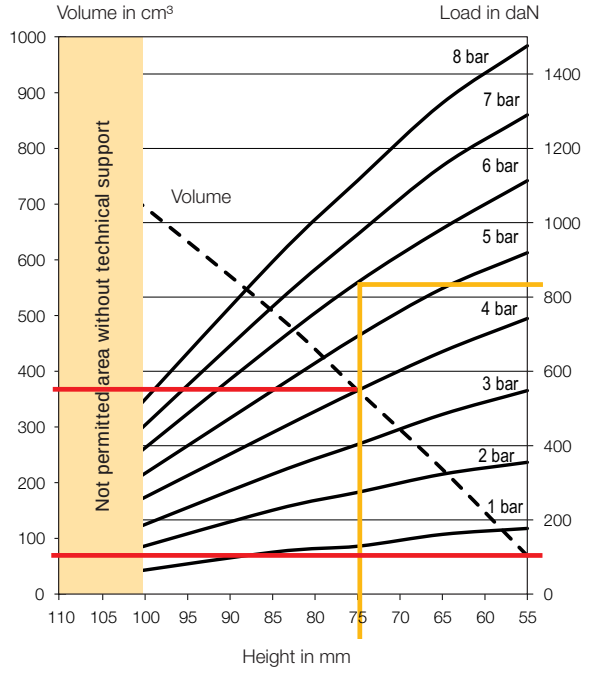

Note! the thrust of the Air Bellows depends on the height of the bellow. When height increases the thrust decreases because of the change in the effective area of the bellow itself.

Vibration isolation (damping) when Air Bellows are used as isolators

Air Bellows are an excellent solution to vibration isolation problems. The graph gives natural frequencies at static heights when pressurized at 4 bar and the graph allows the calculation of the percentage isolation at given forcing frequencies.

The basic points which must be considered when selecting an air bellow as an isolator are:

- load or total weight and number of mounting points
- recommended operating height
- degree of isolation
- operating pressure

Load capability

When selecting the isolator, there should be sufficient load-bearing capability to compensate asymmetric load distribution or excess weight. Air isolators have been designed to absorb dynamic increases in load from operating vibrations.

Recommended operating height

To ensure optimum isolation and lateral stiffness, isolators should be used at the recommended operating height.

Operating pressure

As a rule, the size of the air isolator is correct if the operating pressure is between 4 and 6 bar.

Degree of isolation

The degree of isolation is a measure of the isolation of vibration excitation. Vibration isolation exists only if the exciting frequency is at least 1.4 times greater than the respective natural frequency.

$fe > \sqrt{2} \cdot fo$

The degree of isolation can be read from the graph with the parameters natural frequency and exciting frequency. For example, a degree of isolation of 98% means that only 2% of the exciting force is transmitted by the air isolators; 98% of the excitations are isolated.

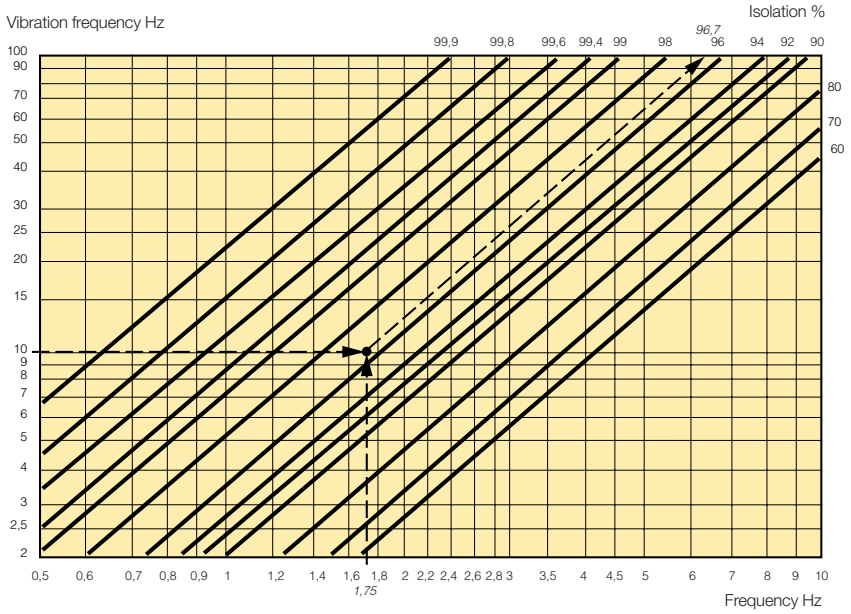

How damping is calculated in %

1. Search the vertical axis of the graph for the frequency of vibration that requires damping.
2. Search for the loading and size of the unit in the lower table. (Note that bellows with twin and triple convolutions give better damping but higher static height.)
3. Having chosen the unit required, select the frequency in Hz on the bottom axis on the graph.
4. Where the lines from steps 1 and 3 intersect, follow the diagonal line up to the top right-hand edge of the graph to find the damping value.

Example

1. Frequency to be damped = 10 Hz.
2. Loading of Air Bellows unit = 1500 kg.
3. The bellows cylinder in this example has twin bellows, Ø 250 (10" x 2) which, according to the table, gives a frequency of 1.75 Hz at 6 bar.
4. This produces 96,7% damping according to the diagram above.

Parker Hannifin Corporation
Pneumatic Division - Europe

Tel: +45 63 12 83 00 | Email: ps@hymatik.com | www.hymatik.com | Hvidkaervej 27a, DK-5250 Odense SV, Denmark

Bellows materials

Standard temperature, natural rubber NR made with NR (natural), SBR (styrolbutadiene), BR (butadiene) elastomers, Carbon Black and Chimical products.

Natural rubber is an ideal material for industrial applications in or out door.

- Excellent universal properties
- Very high dynamic capability
- Elasticity
- Tensile strength
- Tear resistance
- Abrasion resistance
- For removable and Crimped air bellows types

NR

High temperature, chloroprene rubber CR made with NR (natural), SBR (styrolbutadiene), IR (poly isoprene rubber), CIIR (chlorobutyl rubber) elastomers, Carbon Black and Chimical products.

Chloroprene rubber is mainly characterised by good environmental resistance (weather, ozone, UV, ageing).

- Temperature resistance higher than NR
- Flame retardant
- Limited resistance to mineral oils
- Very high weathering resistance
- For removable air bellows type

CR

Higher temperature, epichlorohydrin rubber ECO made with NR (natural), SBR (styrolbutadiene), ECO (epichlorohydrine) elastomers, Carbon Black and Chimical products.

Epichlorohydrin is a rubber for high temperature applications.

- Resistance to mineral oils and fuels
- Very high continuous temperature resistance
- For removable air bellow type on request

ECO

Air Bellows temperature ranges

	Static		Dynamic		-50	-40	-35	-30	-25	-20	0	+70	+90	+100	+115	+120
	min (°C)	max (°C)	min (°C)	max (°C)												
Standard NR	-50	+90														
			-40	+70												
Chlorobutyl CR	-35	+100														
			-25	+90												
Epichlore ECO	-30	+120														
			-20	+115												

Air Bellows resistances

	NR	CR	ECO
Abrasion	Yes	On request	
Anti freeze agents (ethylene glycol, glycerin)	Yes	Yes	Yes
Fuels	On request		Yes
Mineral or vegetable oils	On request		Yes
Silicone oil	Yes	Yes	Yes
Weak alkalis, soap solution	Yes	Yes	Yes
High concentration of ozone	On request	Yes	Yes
Inorganic acids < 10% and organic acids	Yes	Yes	Yes
Saline solutions, aqueous	Yes	Yes	On request
Water	Yes	Yes	On request

Bellows construction

Bellow rubber consists of:

An Outer & Inner covers rubbers

A first and second plies of reinforced rubber

An inside and outside cover rubber

These plies with cords are at a specific bias angle to one another.

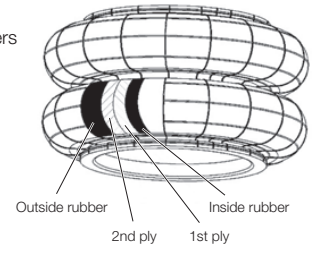

Tel: +45 63 12 83 00 | Email: ps@hymatik.com | www.hymatik.com | Hvidkaervej 27a, DK-5250 Odense SV, Denmark

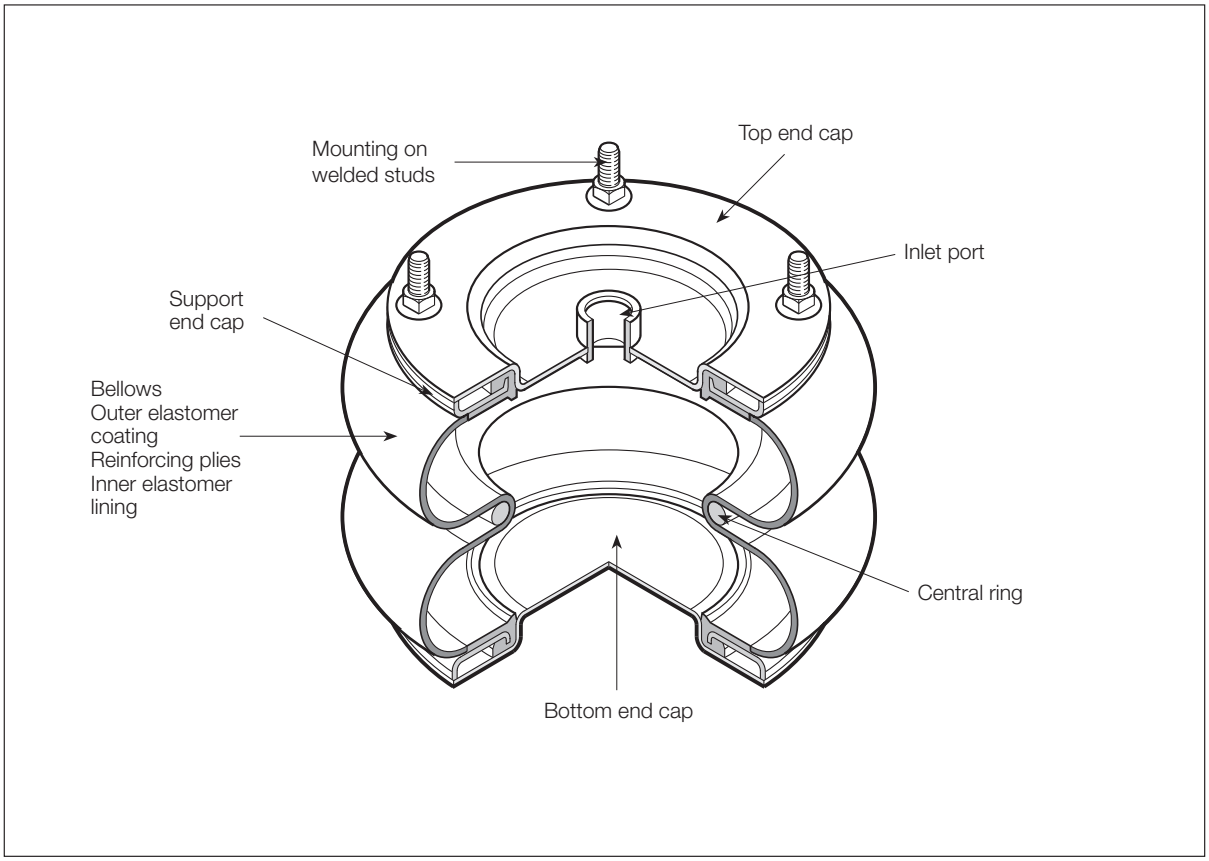

Removable convoluted Air Bellows

Air Bellows are the ideal choice for applications requiring short stroke, high thrust single acting actuators.

Manufactured from fabric reinforced synthetic rubber in one, two or three convolutions according to stroke and model. They incorporate no reciprocating metal parts and so provide virtually frictionless thrust compared with conventional pneumatic cylinders.

All models are single acting only. The return stroke is provided in part by the natural spring action of the bellows but more usually by the load itself.
The simplicity of construction provides an extremely long, virtually maintenance-free service life even under arduous conditions.

Air Bellows are suitable for vibration applications i.e. device feeders at high frequency.

Versions

Air Bellows are available with aluminium, steel end plates or in stainless steel in option. Bellows are in standard a reinforced compound of rubber made in natural, in chlorobutyl or in epichlor in option.

Operation

Due to their flexible construction the mounting of Air Bellows is less critical than with conventional pneumatic cylinders, which normally require rigid fixing and guidance and provide only one axis within a limit of 15° between faces. Additionally the axial location of the end plates may be off set by up to 10 mm.

When pressurised Air Bellows will follow the line of leased resistance. Accordingly care must be taken with the mounting geometry in angled applications.

When depressurised Air Bellows will fit in to surprisingly small spaces, especially useful for clamping or moving awkwardly shaped or very heavy loads.

In operation it is recommended that the unit is not allowed to "bottom out" or achieve its maximum height. Various mechanical devices may be employed to achieve this.

Tel: +45 63 12 83 00 | Email: ps@hymatik.com | www.hymatik.com | Hvidkaervej 27a, DK-5250 Odense SV, Denmark

Technical specification, removable Air Bellows

- Single acting actuator
- One, two or three convolutions

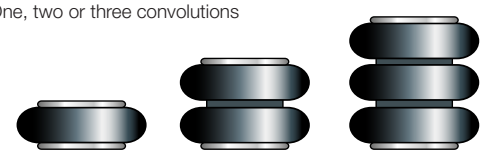

- The stroke is the difference between minimum and maximum heights. The force depends on the stroke.

Working pressure

- One air port on one end plate.
- Max static pressure 10 bar, working pressure 8 bar, 5.5 to 6 bar recommended for dynamic applications.
  Bursting pressure: 25 to 50 bar (depending on diameter, number of convolutions and type of elastomer).

Working medium, air quality

- Suitable for operation with compresses air or other gaseous media such as nitrogen.
- Also suitable for use with oil-free compressed air for the foodstuffs industry and in painting plants.
- Reliable even in low-pressure range with hydraulic media such as water or glycol.

Maintenance

- Free maintenance because no friction due to no part on movement. But removable air bellows can be completed dismantled.

Air Bellows material specification

			End caps, clamping ring, central ring			Bellows *		
Ø (mm)	**Nb convolution**	**Type**	**Standard**	**Option stainless steel**	**Option Other treatment**	**Natural**	**Option chlorobutyl**	**Option epichlor**
70	1, 2 & 3	2.3/4 x 1,2 or 3	Aluminium AS9U3	No	No	Compound NR-NBR-SBR	Yes	On request
110 **150 ****	1, 2 & 3	4.1/2 x 1,2 or 3 6 x 1,2 or 3		Stainless steel 1.4301				
550 **660**	1 & 2	21.1/2 x 2 26 x 2 ***	Aluminium AS10G	No	No		No ****	No
150 **200** **250** **300** **370** **410**	1, 2 & 3	8 x 1,2 or 3 8 x 1,2 or 3 10 x 1,2 or 3 12 x 1,2 or 3 14.1/2 x 1,2 or 3 16 x 1,2 or 3	Steel DD13 zinc *	Stainless steel 1.4301	On request	Compound NR-NBR-SBR	Yes	On request

Note: 16 x 3 reinforced Air Bellows

** with end caps made in steel DD13 or in aluminium

* Corrosion protection: Zinc alkaline / Passivation Chrome yellow 3 (Chrome free protection 6).

Resistance to salt spray > 480 hours rust red.
Conformity to ISO 1431-1 for ozone resistance.

*** Steel DD13 zinc

**** On request for 21.1/2 x 2

Mountings on end plates

By threaded holes for

Ø 70, 110, 150, 550, 660

By external studs for

Ø 150, 200, 250, 300, 370, 410

Clamping torques for screws and mounting studs

Ø 70 M5: 5 Nm, M6: 7 to 11 Nm
Ø 110 M6: 7 to 11 Nm, M8: 12 Nm
Ø 150 M8 int.: 12 Nm, M10 ext.: 20 to 28 Nm
Ø 200 to 660 M10 int.: 25 Nm, M10 ext.: 20 to 28 Nm



Recommendations

It is not possible to combine angular misalignment with axial misalignment.

It is imperative that external machanical stops are used to limit the stroke.

The units should not achieve maximum stroke or be allowed to "bottom out".

Air Bellows may not be stacked, use singly only.

- The thrust of the Air Bellows depends on the height of the bellow.
- When height increases the thrust decreases because of the change in the effective area.
- DO NOT INFLATE the Air Bellow until it is not fixed on the machines with end stops. And so DEFLATE fully the Air Bellows before removing from the machine.
- Take care to put enough clearance around the Air Bellow because of the change in the section under pressure.
- Use the full surface of the end plates to bear the forces.
- Use guidance to avoid any angular or axial misalignments.

Parker Hannifin Corporation
Pneumatic Division - Europe

Tel: +45 63 12 83 00 | Email: ps@hymatik.com | www.hymatik.com | Hvidkaervej 27a, DK-5250 Odense SV, Denmark

Part numbers for ordering, removable convoluted Air Bellows

Ø (mm) (Inch size)	Type	Nb conv.	Air port size BSPP	Weight (kg)	Max stroke (mm)	Cups material	Max force (N) at 7 bar	Order code			
								Standard cups		Stainless steel cups	
								Standard bellows	High temp bellows	Standard bellows	High temp bellows
70 (2.3/4")	2.3/4 x 1	1	G1/4	0,35	20	Alu.	3020	**9109025**	**9109525**	/	/
	2.3/4 x 2	2		0,50	50		3067	**9109009**	**9109509**	/	/
	2.3/4 x 3	3		0,60	65		2672	**9109010**	**9109510**	/	/
110 (4.1/2")	4.1/2 x 1	1	G3/8	0,80	45	Alu.	7370	**9109400**	**9109500**	/	/
	4.1/2 x 2	2		1,00	80		6700	**9109401**	**9109502**	/	/
	4.1/2 x 3	3		1,20	100		6210	**9109402**	**9109503**	/	/
150 (6")	6 x 1	1	G1/2	2,00	55	Alu.	12900	**9109004A**	**9109204A**	/	/
	6 x 2	2		2,70	120		13800	**9109001A**	**9109201A**	/	/
	6 x 3	3		3,00	180		12600	**9109007A**	**9109207A**	/	/
150 (6")	6 x 1	1	G1/2	2,00	55	Steel or stainless steel	12900	**9109004**	**9109204**	**9109004N**	**9109204N**
	6 x 2	2		2,70	120		13800	**9109001**	**9109201**	**9109001N**	**9109201N**
	6 x 3	3		3,00	180		12600	**9109007**	**9109207**	**9109007N**	**9109207N**
200 (8")	8 x 1	1	G1/2	3,05	75	Steel or stainless steel	20980	**9109014**	**9109214**	**9109014N**	**9109214N**
	8 x 2	2		3,75	180		22900	**9109011**	**9109211**	**9109011N**	**9109211N**
	8 x 3	3		4,30	225		21040	**9109017**	**9109217**	**9109017N**	**9109217N**
250 (10")	10 x 1	1	G1/2	3,90	100	Steel or stainless steel	31700	**9109024**	**9109224**	**9109024N**	**9109224N**
	10 x 2	2		5,00	200		35390	**9109021**	**9109221**	**9109021N**	**9109221N**
	10 x 3	3		5,60	300		33000	**9109031**	**9109231**	**9109031N**	**9109231N**
300 (12")	12 x 1	1	G1/2	5,20	100	Steel or stainless steel	46070	**9109044**	**9109244**	**9109044N**	**9109244N**
	12 x 2	2		6,70	195		46760	**9109041**	**9109241**	**9109041N**	**9109241N**
	12 x 3	3		8,10	330		50520	**9109051**	**9109251**	**9109051N**	**9109251N**
370 (14.1/2")	14.1/2 x 1	1	G1/2	6,90	115	Steel or stainless steel	67710	**9109064**	**9109264**	**9109064N**	**9109264N**
	14.1/2 x 2	2		9,10	225		70930	**9109061**	**9109261**	**9109061N**	**9109261N**
	14.1/2 x 3	3		10,00	350		72010	**9109069**	**9109269**	**9109069N**	**9109269N**
410 (16")	16 x 1	1	G1/2	7,00	160	Steel or stainless steel	72080	**9109026**	**9109226**	**9109026N**	**9109226N**
	16 x 2	2		9,70	250		79840	**9109171**	**9109271**	**9109171N**	**9109271N**
	16 x 3	3 *		12,50	375		76520	**9109177**	**9109277**	**9109177N**	**9109277N**
550 (21.1/2")	21.1/2 x 2	2	G3/4	20,60	300	Alu.	168890	**9109150**	**9109250**	/	/
	21.1/2 x 2	2 **	-	11,50		-	/	**9109153**	**9109253**	/	/
660 (26")	26 x 2	2	G3/4	23,70	410	Steel	237600	**9109156**	/	/	/
	26 x 2	2 **	-	14,60		-	/	**9109159**	/	/	/

* Reinforced bellows 4 layers

** Air bellows less cups

Note: 16x2, 10x3, 12x3, 14.1/2x3 exist with reinforced 4 layers, add -4P at the end of the part number, ie 9109069-4P

Note: 4.1/2x2, 8x2, 14.1/2x1 exist without cups on request

Air Bellows permissible misalignments when Air Bellows are used as actuators

H rec. = recommended installation height |ØN min = minimum space diameter need for installing the Air Bellows

It is not possible to combine angular misalignment with axial misalignment.	Axial	Angular
The following values are for short time movement during stroke. The Air Bellows may not be exposed to axial misalignment permanently.	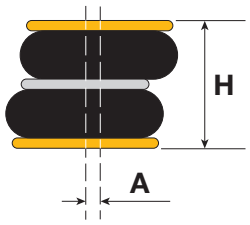	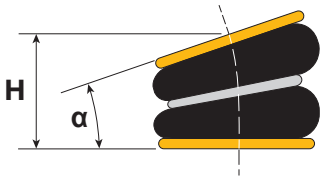

Ø (mm) (Inch size)	Order code	Type	Nb conv.	ØN min (mm)	A = 5 mm for H (mm) between min to max	A = 10 mm for H (mm) between min to max	H rec. (mm)	Angle α = 5° for H (mm) between min to max	Angle α = 10° for H (mm) between min to max	Angle α = 15° for H (mm) between min to max
Ø 70 (2.3/4")	**9109025**	2.3/4 x 1	1	95			65			
	9109009	2.3/4 x 2	2		80 to 100	85 to 95	105	75 to 100	80 to 95	
	9109010	2.3/4 x 3	3		90 to 125	100 to 115	130	90 to 120	95 to 110	
Ø 110 (4.1/2")	**9109400**	4.1/2 x 1	1	140	60 to 80	70 to 90	80	60 to 75	65 to 70	
	9109401	4.1/2 x 2	2		75 to 145	85 to 135	135	80 to 125	105 to 145	
	9109402	4.1/2 x 3	3		120 to 200	110 to 180	180	125 to 180	130 to 170	
Ø 150 (6")	**9109004A**	6 x 1	1	190	65 to 95	75 to 85	100	65 to 90	70 to 85	
	9109001A	6 x 2	2		100 to 175	110 to 165	175		95 to 160	100 to 155
	9109007A	6 x 3	3		115 to 250	105 to 230	255	195 to 255	200 to 250	
Ø 150 (6")	**9109004**	6 x 1	1	190	65 to 95	75 to 85	95	65 to 90	70 to 85	
	9109001	6 x 2	2		100 to 175	110 to 165	170		95 to 160	100 to 155
	9109007	6 x 3	3		115 to 250	105 to 230	250	195 to 255	200 to 250	
Ø 200 (8")	**9109014**	8 x 1	1	245	70 to 120	65 to 115	115	60 to 105	70 to 100	
	9109011	8 x 2	2		85 to 240	95 to 230	220	90 to 210	100 to 205	
	9109017	8 x 3	3		110 to 280	100 to 260	300	250 to 305	255 to 300	
Ø 250 (10")	**9109024**	10 x 1	1	300	65 to 145	70 to 135	135	70 to 115	80 to 105	
	9109021	10 x 2	2		95 to 270	105 to 200	245		95 to 260	115 to 250
	9109031	10 x 3	3		175 to 390	165 to 380	350	245 to 370	280 to 350	
Ø 300 (12")	**9109044**	12 x 1	1	350	70 to 135	80 to 130	135		75 to 115	90 to 105
	9109041	12 x 2	2		95 to 280	105 to 270	245	100 to 255	110 to 245	
	9109051	12 x 3	3		140 to 410	150 to 400	350	230 to 340	250 to 310	
Ø 370 (14.1/2")	**9109064**	14.1/2 x 1	1	425	105 to 170	85 to 160	150	65 to 145	85 to 135	
	9109061	14.1/2 x 2	2		110 to 340	120 to 330	270		115 to 290	135 to 275
	9109069	14.1/2 x 3	3		160 to 440	170 to 430	420	300 to 390	310 to 370	
Ø 410 (16")	**9109026**	16 x 1	1	460		85 to 195	190		85 to 180	
	9109171	16 x 2	2		170 to 325	180 to 315	300	125 to 325	135 to 315	
	9109177	16 x 3	3 *		275 to 500	290 to 485	475		350 to 480	370 to 450
Ø 550 (21.1/2")	**9109150**	21.1/2 x 2	2	630			350			
Ø 660 (26")	**9109156**	26 x 2	2	750			425			

* Reinforced bellows 4 layers

= on request

Vibration isolation (damping) when Air Bellows are used as isolators

The stiffness is the reaction force that appears when Air Bellow deflects from its initail position.
Due to the compression of air the stiffness is not constant an it is a function of effective area variation, volume and pressure variations.
H2 rec. = recommended installation height for best isolation.

Isolation rate I (%)
fe=exciting frequency (Hz)
fn=natural frequency (Hz)

$$I = 1 - \frac{1}{\left(\frac{fe}{fn}\right)^2 - 1}$$

							At 2 bar		At 4 bar		At 6 bar		At 0 bar
Ø (mm) (Inch size)	**Order code**	**Type**	**Nb conv.**	**Max stroke (mm)**	**Static height (mm)**	**H2 rec. (mm)**	**Natural Frequency fn (Hz)**	**Stiffness (daN/mm)**	**Natural Frequency fn (Hz)**	**Stiffness (daN/mm)**	**Natural Frequency fn (Hz)**	**Stiffness (daN/mm)**	**Load (N) to obtain H (mm)**
70 (2.3/4")	**9109025**	2.3/4 x 1	1	20	60	62	5,22	5,96	4,79	9,61	4,60	13,37	160 (50)
	9109009	2.3/4 x 2	2	50	90	90	4,14	3,17	3,76	5,25	3,60	7,25	125 (65)
	9109010	2.3/4 x 3	3	65	110	120	3,50	2,06	3,22	3,58	3,12	5,07	250 (80)
110 (4.1/2")	**9109400**	4.1/2 x 1	1	45	65	72	4,21	7,49	3,87	13,18	3,71	18,49	150 (50)
	9109401	4.1/2 x 2	2	80	100	130	2,94	2,65	2,71	4,95	2,62	7,14	250 (65)
	9109402	4.1/2 x 3	3	100	145	195	2,20	1,31	2,04	2,55	1,96	3,68	100 (100)
150 (6")	**9109004A**	6 x 1	1	55	80	90	3,76	10,63	3,47	19,19	3,33	27,22	250 (55)
	9109001A	6 x 2	2	120	130	160	2,51	4,41	2,33	7,94	2,25	11,40	170 (75)
	9109007A	6 x 3	3	180	190	230	2,07	2,99	1,91	5,40	1,85	7,73	230 (100)
150 (6")	**9109004**	6 x 1	1	55	80	85	3,71	9,43	3,43	17,40	3,30	24,90	250 (50)
	9109001	6 x 2	2	120	130	150	2,51	4,55	2,33	8,17	2,25	11,69	170 (70)
	9109007	6 x 3	3	180	190	225	2,07	2,91	1,91	5,27	1,85	7,55	230 (95)
200 (8")	**9109014**	8 x 1	1	75	90	100	3,05	13,40	2,86	23,79	2,77	34,21	220 (50)
	9109011	8 x 2	2	180	160	200	2,15	4,88	2,00	8,82	1,95	12,81	350 (80)
	9109017	8 x 3	3	225	205	280	1,82	3,34	1,67	6,02	1,60	8,51	280 (100)
250 (10")	**9109024**	10 x 1	1	100	100	120	2,71	15,00	2,54	27,10	2,46	38,50	150 (50)
	9109021	10 x 2	2	200	170	220	1,93	7,02	1,80	12,54	1,75	17,88	200 (75)
	9109031	10 x 3	3	300	250	320	1,58	4,40	1,47	7,60	1,43	11,00	250 (100)
300 (12")	**9109044**	12 x 1	1	100	100	120	2,69	23,00	2,51	41,30	2,44	58,80	280 (50)
	9109041	12 x 2	2	195	170	220	1,97	10,90	1,84	20,00	1,78	28,50	170 (75)
	9109051	12 x 3	3	330	250	320	1,58	7,60	1,48	13,30	1,44	18,90	400 (100)
370 (14.1/2")	**9109064**	14.1/2 x 1	1	115	110	130	2,48	32,80	2,30	55,90	2,22	78,40	360 (50)
	9109061	14.1/2 x 2	2	225	180	250	1,78	15,10	1,66	26,40	1,61	37,30	210 (75)
	9109069	14.1/2 x 3	3	350	280	370	1,43	9,20	1,35	16,30	1,31	23,30	210 (105)
410 (16")	**9109026**	16 x 1	1	160	130	150	2,29	24,80	2,14	51,30	2,07	73,30	150 (50)
	9109171	16 x 2	2	250	200	290	1,57	12,60	1,48	22,80	1,44	32,30	120 (80)
	9109177	16 x 3	3 *	375	300	400	1,35	9,60	1,26	16,80	1,24	24,40	200 (120)
550 (21.1/2")	**9109150**	21.1/2 x 2	2	300	200	300	1,71	31,00	1,56	53,80	1,50	75,60	480 (90)
660 (26")	**9109156**	26 x 2	2	410	200	350	1,37	31,60	1,27	56,00	1,23	79,20	150 (90)

* Reinforced bellows 4 layers

Tel: +45 63 12 83 00 | Email: ps@hymatik.com | www.hymatik.com | Hvidkaervej 27a, DK-5250 Odense SV, Denmark

Mounting dimensions (drawn on a 2 convolutions version)

Aluminium end plates version

Ø 70 mm (2¾")

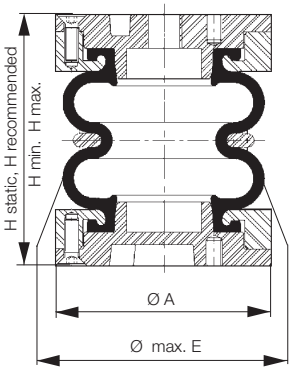

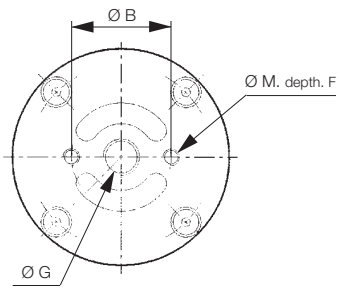

Ø 110 mm (4½")

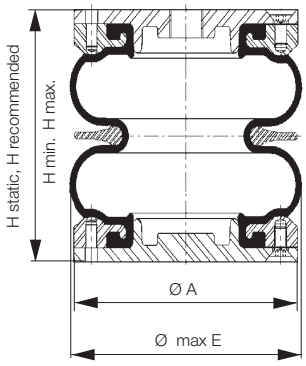

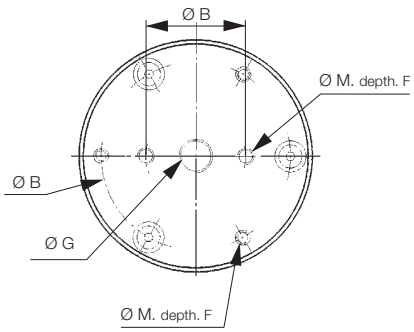

Ø 150 mm (6")

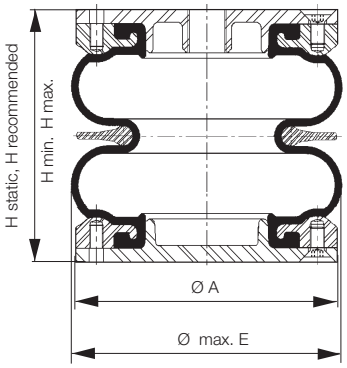

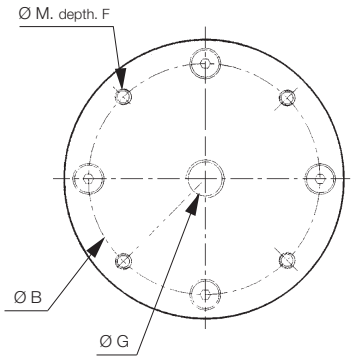

Steel end plates version
Ø 150 to 410 mm (6 to 16")

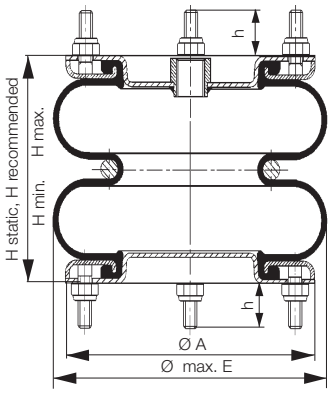

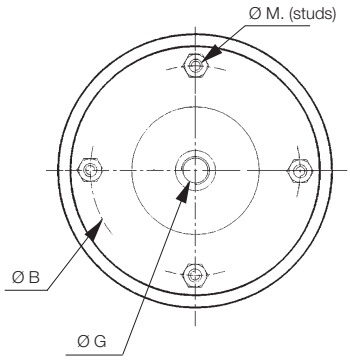

Aluminium end plates version
Ø 550 mm to 660 mm (21½ to 26")

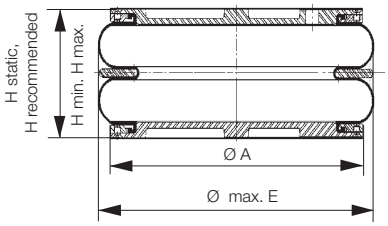

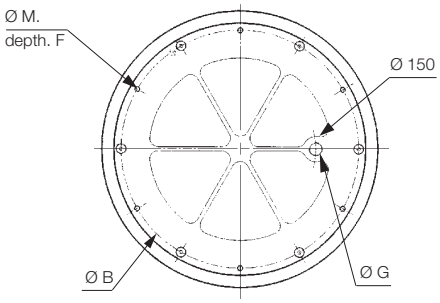

Air Bellows mounting dimensions (mm), removable type

Note: High temp, epichlore, stainless steel cup versions have same dimensions

H min, H max, H rec. = recommended installation heights

H2 rec. when air bellows is used as an isolator

F = thread depth for fixing

ØN min = minimum space diameter need for installing the air bellows



It is imperative that external machanical end stops are used to limit the stroke. The air bellow should not achieve maximum or minimum heights or be allowed to "bottom out". Air bellows may not be stacked, use singly only.

Air Bellows description					Weight	Heights						Diameters				Mounting			Pressure			
Ø (mm) (Inch size)	Order code	Type	Nb conv.	Cups material	kg	Max stroke mm	H min mm	H static mm	H max mm	H rec. mm	H2 rec. mm	ØA mm	ØE static mm	ØE max mm	ØN min mm	ØB mm	ØM mm	F depth mm	ØG air port	Max static bar	Max dyn. bar	Rec. dyn. bar
70 (2.3/4")	**9109025**	2.3/4 x 1	1	Alu.	0,35	**20**	50	60	70	65	62	78	70	80	95	36	2 x M6	7,5	G1/4	10	8	5,5
	9109009	2.3/4 x 2	2	Alu.	0,50	**50**	65	90	115	105	90											
	9109010	2.3/4 x 3	3	Alu.	0,60	**65**	80	110	145	130	120											
110 (4.1/2")	**9109400**	4.1/2 x 1	1	Alu.	0,80	**45**	45	65	90	80	72	110	110	125	140	93	3 x M6	7,5	G3/8	10	8	5,5
	9109401	4.1/2 x 2	2	Alu.	1,00	**80**	65	100	145	135	130											
	9109402	4.1/2 x 3	3	Alu.	1,20	**100**	100	145	200	180	195											
150 (6")	**9109004A**	6 x 1	1	Alu.	2,00	**55**	55	80	110	100	90	152,5	150	175	190	45 127	2 x M8 4 x M8	13 10	G1/2	10	8	5,5
	9109001A	6 x 2	2	Alu.	2,70	**120**	75	130	195	175	160											
	9109007A	6 x 3	3	Alu.	3,00	**180**	100	190	280	255	230											

Air Bellows description					Weight	Heights						Diameters				Mounting			Pressure			
Ø (mm) (Inch size)	Order code	Type	Nb conv.	Cups material	kg	Max stroke mm	H min mm	H static mm	H max mm	H rec. mm	H2 rec. mm	ØA mm	ØE static mm	ØE max mm	ØN min mm	ØB mm	ØM mm	F depth mm	ØG air port	Max static bar	Max dyn. bar	Rec. dyn. bar
150 (6")	**9109004**	6 x 1	1	Steel	2,50	**55**	50	80	105	95	85	155	150	175	190	127	4 x M10 ext, h=26,5 mm	-	G1/2	10	8	5,5
	9109001	6 x 2	2		2,70	**120**	70	130	190	170	150											
	9109007	6 x 3	3		3,00	**180**	95	190	275	250	225											
200 (8")	**9109014**	8 x 1	1	Steel	3,05	**75**	50	90	125	115	100	184	200	230	245	155,5	4 x M10 ext, h=26,5 mm	-	G1/2	10	8	5,5
	9109011	8 x 2	2		3,75	**180**	70	160	250	220	200											
	9109017	8 x 3	3		4,30	**225**	100	205	325	300	280											
250 (10")	**9109024**	10 x 1	1	Steel	3,90	**100**	50	100	150	135	120	210	250	280	300	181	4 x M10 ext, h=26,5 mm	-	G1/2	10	8	5,5
	9109021	10 x 2	2		5,00	**200**	70	170	270	245	220											
	9109031	10 x 3	3		5,60	**300**	100	250	400	350	320											
300 (12")	**9109044**	12 x 1	1	Steel	5,20	**100**	50	100	150	135	120	260	300	330	350	232	4 x M10 ext, h=27,5 mm	-	G1/2	10	8	5,5
	9109041	12 x 2	2		6,70	**195**	75	170	270	245	220						4 x M10 ext, h=26,5 mm					
	9109051	12 x 3	3		8,10	**330**	100	250	430	350	320											
370 (14.1/2")	**9109064**	14.1/2 x 1	1	Steel	6,90	**115**	50	110	165	150	130	310	370	395	425	282,5	4 x M10 ext, h=26,5 mm	-	G1/2	10	8	5,5
	9109061	14.1/2 x 2	2		9,10	**225**	70	180	295	270	250											
	9109069	14.1/2 x 3	3		10,00	**350**	100	280	450	420	370											
410 (16")	**9109026**	16 x 1	1	Steel	7,00	**160**	50	130	210	190	150	310	410	440	460	282,5	4 x M10 ext, h=26,5 mm	-	G1/2	10	8	5,5
	9109171	16 x 2	2		9,70	**250**	75	200	325	300	290											
	9109177	16 x 3	3 *		12,50	**375**	125	300	500	475	400											

* Reinforced bellows 4 layers

Air Bellows description					Weight	Heights						Diameters				Mounting			Pressure			
Ø (mm) (Inch size)	Order code	Type	Nb conv.	Cups material	kg	Max stroke mm	H min mm	H static mm	H max mm	H rec. mm	H2 rec. mm	ØA mm	ØE static mm	ØE max mm	ØN min mm	ØB mm	ØM mm	F depth mm	ØG air port	Max static bar	Max dyn. bar	Rec. dyn. bar
550 (21.1/2")	**9109150**	21.1/2 x 2	2	Alu.	20,60	**300**	90	200	390	350	300	498,5	550	580	630	470	6 x M10	9	G3/4	10	7	5,5
	9109153	21.1/2 x 2	2 **	-	11,50							-				-	-	-	-		8	
660 (26")	**9109156**	26 x 2	2	Steel	23,70	**410**	90	200	500	425	350	610	660	700	750	470	6 x M10	9	G3/4	10	8	5,5
	9109159	26 x 2	2 **	-	14,60							-				-	-	-	-			

** Air bellows less cups

Type x Number of Convolution: **2.3/4" x 1, Ø 70**

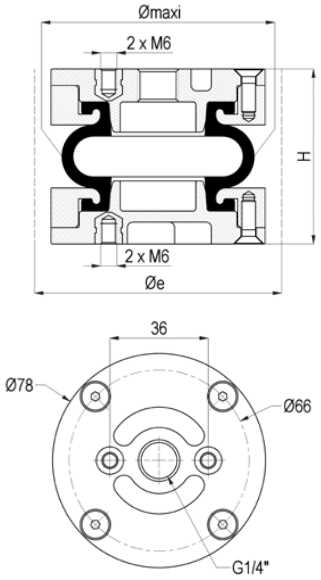

Adiabatic characteristic curves / Dynamic movements

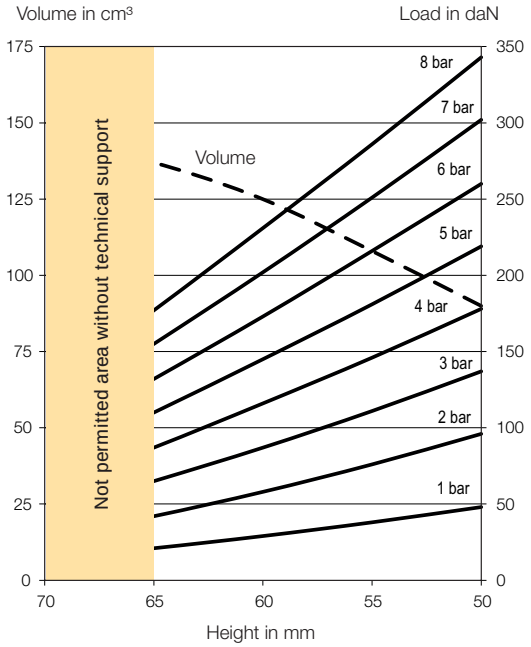

Order Code

Materials	Cups	Standard cups	Stainless steel cups
Standard temperature NR	Aluminium	**9 109 025**	-
High temperature CR		**9 109 525**	-
Extreme high temp. ECO		On request	-

Technical data

Air port inlet	G1/4"
Rec / Max pressure [bar]	5,5 / 8
Force [N] @ 0 bar to H (mm)	160 (50)
Weight [kg]	0,35

Dimensions [mm]

Ø maxi.	80
Øe	95
H static	60
H min.	50
H max.	70
H recommended	65

Fastening torque [Nm]

G1/4"	15 Nm
FHc M5	5 Nm
M6	5 Nm

Dynamic characteristic values

Pressure p [bar]	2	4	6
Force (load) [kN]	50	105	155
Stiffness [daN/cm]	56,9	96,1	133,7
Natural frequency [Hz]	5,2	4,8	4,6
Vol. V [cm³]	115	112	130
H2 rec for isolation [mm]	62	62	62

Misalignment for H between [mm]

Axial	A = 5 mm	-
	A = 10 mm	-
Angular	Angle α = 5°	-
	Angle α = 10°	-
	Angle α = 15°	-

Static characteristic values

		Force F [daN]						
Pressure p [bar]		**3**	**4**	**5**	**6**	**7**	**8**	**Vol. V [cm³]**
Height H [mm]	**50**	137	178	219	260	302	343	90
	55	111	146	181	216	251	286	108
	60	87	116	145	173	202	231	125
	65	65	87	110	132	155	177	137
	70	44	60	76	92	109	125	145
	-	-	-	-	-	-	-	-
	-	-	-	-	-	-	-	-

Type x Number of Convolution: **2.3/4" x 2, Ø 70**

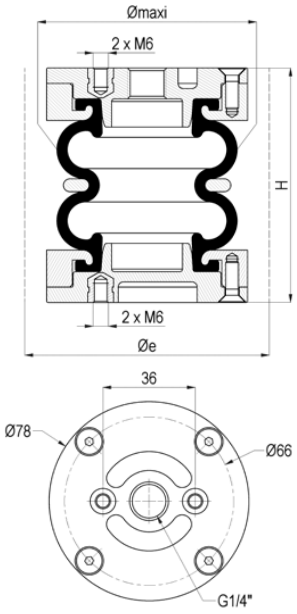

Adiabatic characteristic curves / Dynamic movements

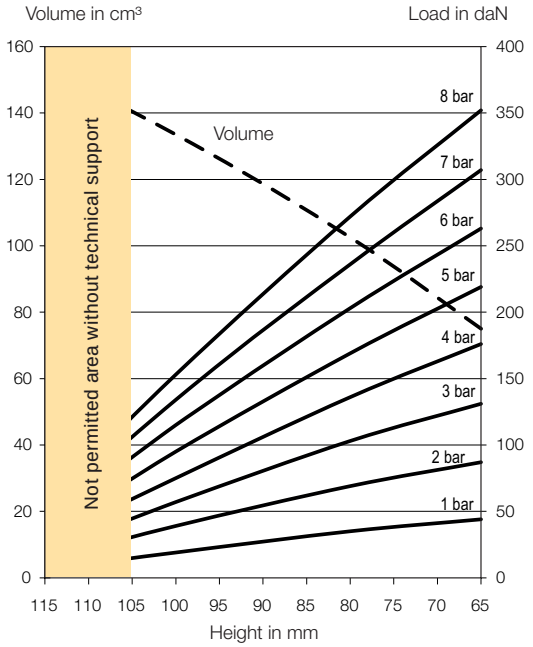

Order Code

Materials	Cups	Standard cups	Stainless steel cups
Standard temperature NR	Aluminium	**9 109 009**	-
High temperature CR		**9 109 509**	-
Extreme high temp. ECO		On request	-

Technical data

Air port inlet	G1/4"
Rec / Max pressure [bar]	5,5 / 8
Force [N] @ 0 bar to H (mm)	125 (65)
Weight [kg]	0,50

Dimensions [mm]

Ø maxi.	80
Øe	95
H static	90
H min.	65
H max.	115
H recommended	105

Fastening torque [Nm]

G1/4"	15 Nm
FHc M5	5 Nm
M6	5 NM

Dynamic characteristic values

Pressure p [bar]	2	4	6
Force (load) [kN]	45	90	140
Stiffness [daN/cm]	31,7	52,5	72,5
Natural frequency [Hz]	4,1	3,8	3,6
Vol. V [cm³]	135	140	145
H2 rec for isolation [mm]	90	90	90

Misalignment for H between [mm]

Axial	A = 5 mm	80 to 100
	A = 10 mm	85 to 95
Angular	Angle α = 5°	75 to 100
	Angle α = 10°	80 to 95
	Angle α = 15°	-

Static characteristic values

		Force F [daN]						
Pressure p [bar]		3	4	5	6	7	8	Vol. V [cm³]
Height H [mm]	**65**	131	176	219	263	307	352	75
	80	103	136	169	203	236	272	103
	100	57	75	95	115	134	153	134
	115	20	27	33	40	47	54	154
	-	-	-	-	-	-	-	-
	-	-	-	-	-	-	-	-
	-	-	-	-	-	-	-	-

Tel: +45 63 12 83 00 | Email: ps@hymatik.com | www.hymatik.com | Hvidkaervej 27a, DK-5250 Odense SV, Denmark

Type x Number of Convolution: **2.3/4" x 3, Ø 70**

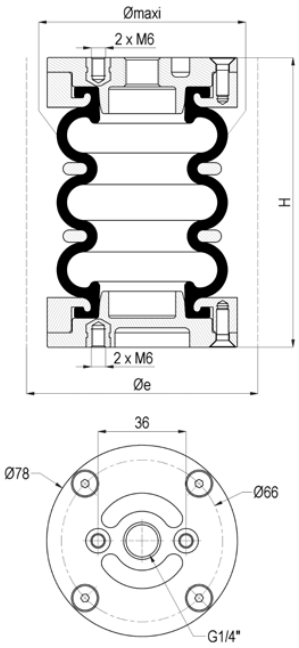

Adiabatic characteristic curves / Dynamic movements

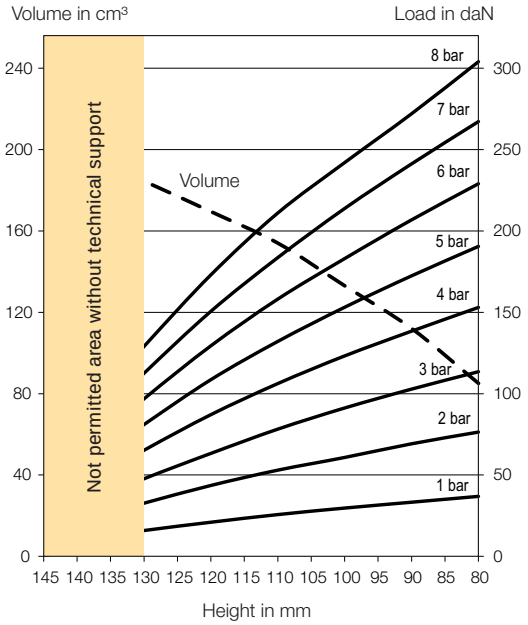

Order Code

Materials	Cups	Standard cups	Stainless steel cups
Standard temperature NR	Aluminium	**9 109 010**	-
High temperature CR		**9 109 510**	-
Extreme high temp. ECO		On request	-

Technical data

Air port inlet	G1/4"
Rec / Max pressure [bar]	5,5 / 8
Force [N] @ 0 bar to H (mm)	250 (80)
Weight [kg]	0,60

Dimensions [mm]

Ø maxi.	80
Øe	95
H static	110
H min.	80
H max.	145
H recommended	130

Fastening torque [Nm]

G1/4"	15 Nm
FHc M5	5 Nm
M6	5 Nm

Dynamic characteristic values

Pressure p [bar]	2	4	6
Force (load) [kN]	40	85	130
Stiffness [daN/cm]	20,6	35,8	50,7
Natural frequency [Hz]	3,5	3,2	3,1
Vol. V [cm³]	197	199	202
H2 rec for isolation [mm]	120	120	120

Misalignment for H between [mm]

Axial	A = 5 mm	90 to 125
	A = 10 mm	100 to 115
Angular	Angle α = 5°	90 to 120
	Angle α = 10°	95 to 110
	Angle α = 15°	-

Static characteristic values

Pressure p [bar]		Force F [daN]						
		3	4	5	6	7	8	Vol. V [cm³]
Height H [mm]	**80**	114	153	191	229	267	304	85
	90	103	138	172	207	241	272	112
	100	91	123	153	183	214	242	133
	110	78	106	132	158	184	211	154
	120	63	87	109	129	151	173	170
	130	48	65	81	97	113	129	185
	140	31	42	52	62	72	83	199

Tel: +45 63 12 83 00 | Email: ps@hymatik.com | www.hymatik.com | Hvidkaervej 27a, DK-5250 Odense SV, Denmark

Type x Number of Convolution: **4.1/2" x 1, Ø 110**

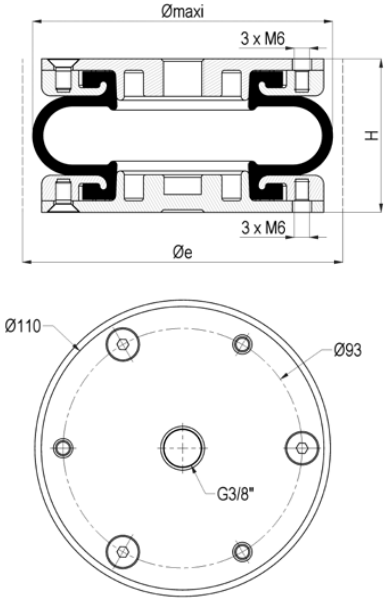

Adiabatic characteristic curves / Dynamic movements

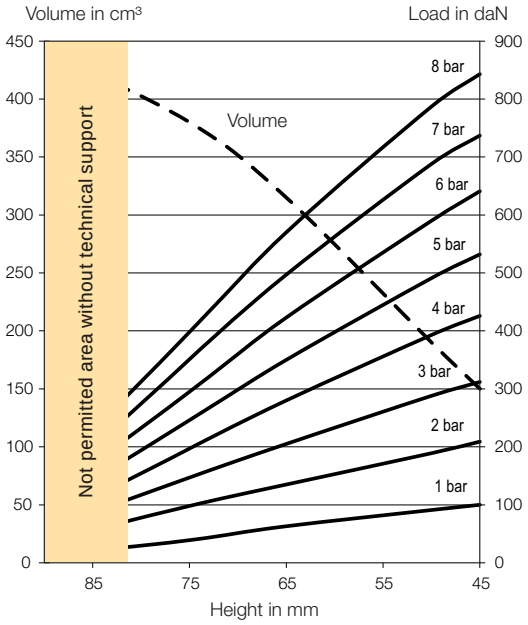

Order Code

Materials	Cups	Standard cups	Stainless steel cups
Standard temperature NR	Aluminium	**9 109 400**	-
High temperature CR		**9 109 500**	-
Extreme high temp. ECO		On request	-

Technical data

Air port inlet	G1/4"
Rec / Max pressure [bar]	5,5 / 8
Force [N] @ 0 bar to H (mm)	150 (50)
Weight [kg]	0,80

Dimensions [mm]

Ø maxi.	125
Øe	140
H static	65
H min.	45
H max.	90
H recommended	80

Fastening torque [Nm]

G1/4"	15 Nm
FHc M5	5 Nm
M6	5 Nm

Dynamic characteristic values

Pressure p [bar]	2	4	6
Force (load) [kN]	105	220	335
Stiffness [daN/cm]	74,9	131,8	184,9
Natural frequency [Hz]	4,2	3,9	3,7
Vol. V [cm³]	316	340	365
H2 rec for isolation [mm]	72	72	72

Misalignment for H between [mm]

Axial	A = 5 mm	60 to 80
	A = 10 mm	70 to 90
Angular	Angle α = 5°	60 to 75
	Angle α = 10°	65 to 70
	Angle α = 15°	-

Static characteristic values

Pressure p [bar]		Force F [daN]						
		3	4	5	6	7	8	Vol. V [cm³]
Height H [mm]	**45**	312	426	532	641	737	843	150
	50	288	393	491	590	688	787	190
	65	205	280	350	423	497	570	315
	75	147	197	246	295	351	398	380
	90	56	70	91	112	126	144	440
	-	-	-	-	-	-	-	-
	-	-	-	-	-	-	-	-

Tel: +45 63 12 83 00 | Email: ps@hymatik.com | www.hymatik.com | Hvidkaervej 27a, DK-5250 Odense SV, Denmark

Type x Number of Convolution: **4.1/2" x 2, Ø 110**

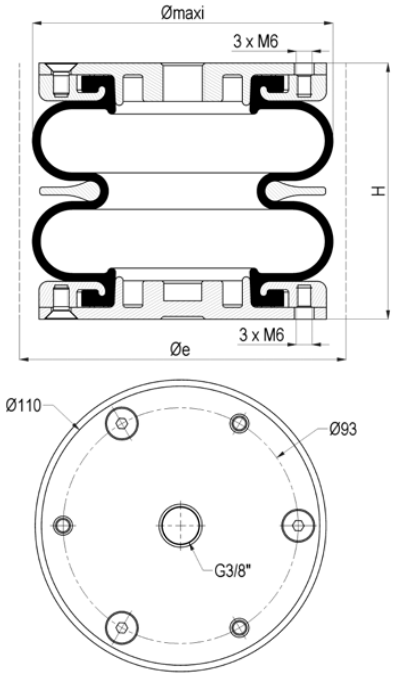

Adiabatic characteristic curves / Dynamic movements

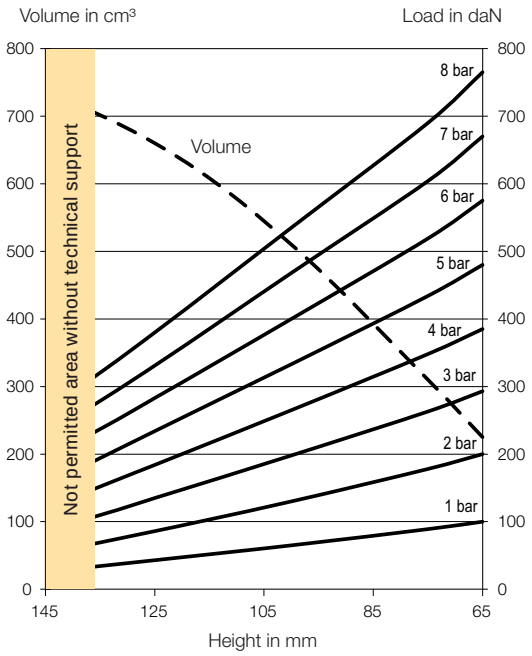

Order Code

Materials	Cups	Standard cups	Stainless steel cups
Standard temperature NR	Aluminium	**9 109 401**	-
High temperature CR		**9 109 502**	-
Extreme high temp. ECO		On request	-

Technical data

Air port inlet	G1/4"
Rec / Max pressure [bar]	5,5 / 8
Force [N] @ 0 bar to H (mm)	250 (65)
Weight [kg]	1,00

Dimensions [mm]

Ø maxi.	125
Øe	140
H static	100
H min.	65
H max.	145
H recommended	135

Fastening torque [Nm]

G1/4"	15 Nm
FHc M5	5 Nm
M6	5 Nm

Dynamic characteristic values

Pressure p [bar]	2	4	6
Force (load) [kN]	75	170	260
Stiffness [daN/cm]	26,5	49,5	71,4
Natural frequency [Hz]	2,9	2,7	2,6
Vol. V [cm³]	628	655	683
H2 rec for isolation [mm]	130	130	130

Misalignment for H between [mm]

Axial	A = 5 mm	75 to 145
	A = 10 mm	85 to 135
Angular	Angle α = 5°	80 to 125
	Angle α = 10°	105 to 145
	Angle α = 15°	-

Static characteristic values

		Force F [daN]						
Pressure p [bar]		**3**	**4**	**5**	**6**	**7**	**8**	**Vol. V [cm³]**
Height H [mm]	**65**	293	385	480	575	670	765	225
	75	263	348	434	519	604	690	310
	100	198	265	333	400	468	535	510
	125	135	184	234	283	331	380	660
	145	86	120	156	193	228	263	740
	-	-	-	-	-	-	-	-
	-	-	-	-	-	-	-	-

Parker Hannifin Corporation
Pneumatic Division - Europe

Tel: +45 63 12 83 00 | Email: ps@hymatik.com | www.hymatik.com | Hvidkaervej 27a, DK-5250 Odense SV, Denmark

Type x Number of Convolution: **4.1/2" x 3, Ø 110**

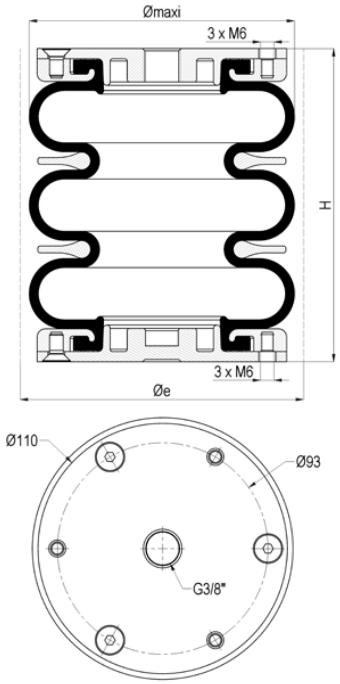

Adiabatic characteristic curves / Dynamic movements

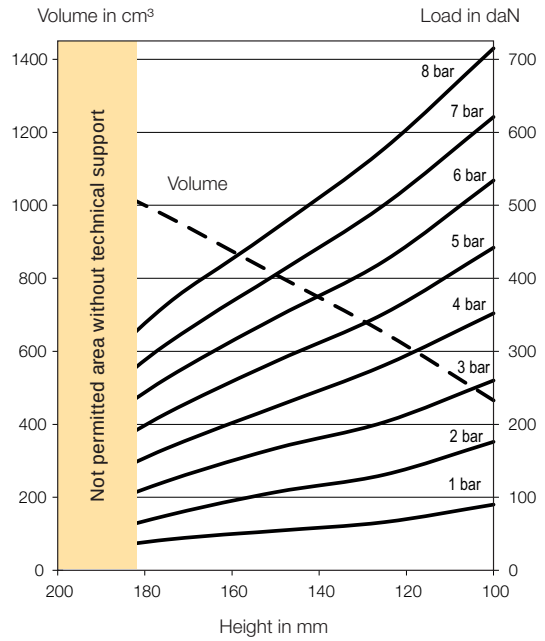

Order Code

Materials	Cups	Standard cups	Stainless steel cups
Standard temperature NR	Aluminium	**9 109 402**	-
High temperature CR		**9 109 503**	-
Extreme high temp. ECO		On request	-

Technical data

Air port inlet	G3/8"
Rec / Max pressure [bar]	5,5 / 8
Force [N] @ 0 bar to H (mm)	100 (100)
Weight [kg]	1,20

Dimensions [mm]

Ø maxi.	125
Øe	140
H static	145
H min.	100
H max.	200
H recommended	180

Fastening torque [Nm]

G1/4"	15 Nm
FHc M5	5 Nm
M6	5 Nm

Dynamic characteristic values

Pressure p [bar]	2	4	6
Force (load) [kN]	65	150	240
Stiffness [daN/cm]	13,1	25,5	36,8
Natural frequency [Hz]	2,2	2,0	2,0
Vol. V [cm³]	940	1010	1080
H2 rec for isolation [mm]	195	195	195

Misalignment for H between [mm]

Axial	A = 5 mm	120 to 200
	A = 10 mm	110 to 180
Angular	Angle α = 5°	125 to 180
	Angle α = 10°	130 to 170
	Angle α = 15°	-

Static characteristic values

Pressure p [bar]		Force F [daN]						
		3	4	5	6	7	8	Vol. V [cm³]
Height H [mm]	**100**	260	352	442	534	621	715	465
	125	203	281	352	424	501	578	650
	150	167	224	286	346	405	468	810
	175	122	167	215	263	310	364	970
	200	66	96	125	155	185	219	1105
	-	-	-	-	-	-	-	-
	-	-	-	-	-	-	-	-

Tel: +45 63 12 83 00 | Email: ps@hymatik.com | www.hymatik.com | Hvidkaervej 27a, DK-5250 Odense SV, Denmark

Type x Number of Convolution: **6" x 1, Ø 150**

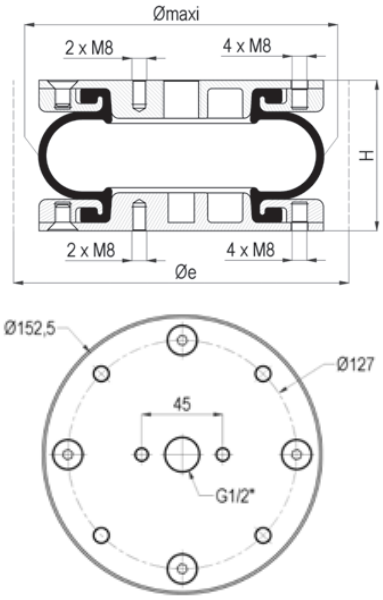

Adiabatic characteristic curves / Dynamic movements

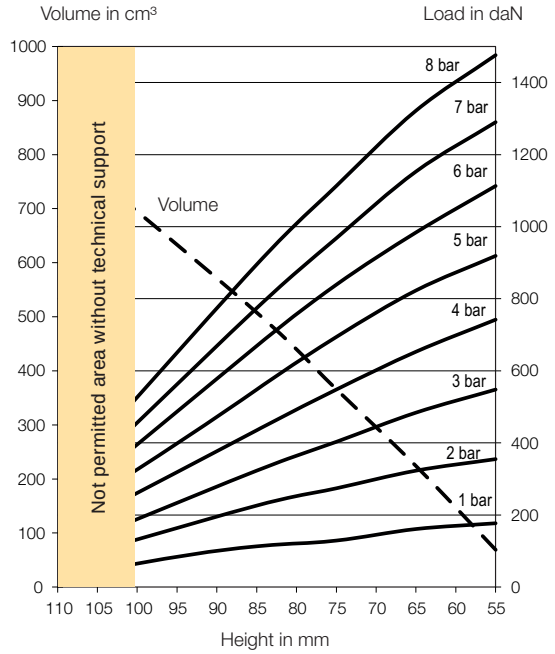

Order Code

Materials	Cups	Standard cups	Stainless steel cups
Standard temperature NR	Aluminium	**9 109 004A**	-
High temperature CR		**9 109 204A**	-
Extreme high temp. ECO		On request	-

Technical data

Air port inlet	G1/2"
Rec / Max pressure [bar]	5,5 / 8
Force [N] @ 0 bar to H (mm)	250 (55)
Weight [kg]	2,50

Dimensions [mm]

Ø maxi.	175
Øe	190
H static	80
H min.	55
H max.	110
H recommended	100

Fastening torque [Nm]

G1/2"	25 Nm
M8	12 Nm
-	-

Dynamic characteristic values

Pressure p [bar]	2	4	6
Force (load) [kN]	185	395	610
Stiffness [daN/cm]	106,3	191,9	272,2
Natural frequency [Hz]	3,8	3,5	3,3
Vol. V [cm³]	730	750	780
H2 rec for isolation [mm]	90	90	90

Misalignment for H between [mm]

Axial	A = 5 mm	65 to 95
	A = 10 mm	75 to 85
Angular	Angle α = 5°	65 to 90
	Angle α = 10°	70 to 85
	Angle α = 15°	-

Static characteristic values

		Force F [daN]						
Pressure p [bar]		**3**	**4**	**5**	**6**	**7**	**8**	**Vol. V [cm³]**
Height H [mm]	**55**	548	742	919	1113	1290	1476	69
	65	484	653	823	984	1153	1322	224
	75	403	548	694	839	968	1113	366
	85	323	435	548	669	774	895	508
	110	97	145	177	210	242	276	817
	-	-	-	-	-	-	-	-
	-	-	-	-	-	-	-	-

Tel: +45 63 12 83 00 | Email: ps@hymatik.com | www.hymatik.com | Hvidkaervej 27a, DK-5250 Odense SV, Denmark

Type x Number of Convolution: **6" x 2, Ø 150**

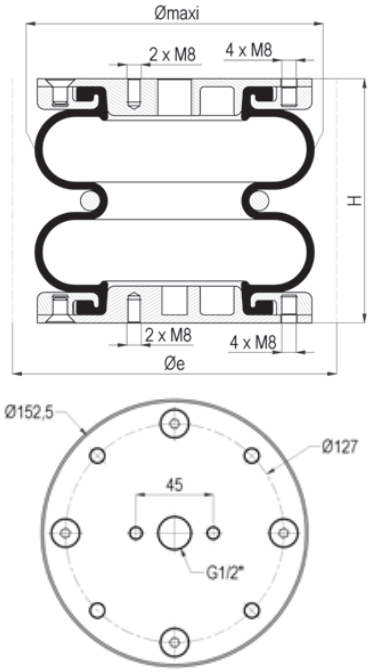

Adiabatic characteristic curves / Dynamic movements

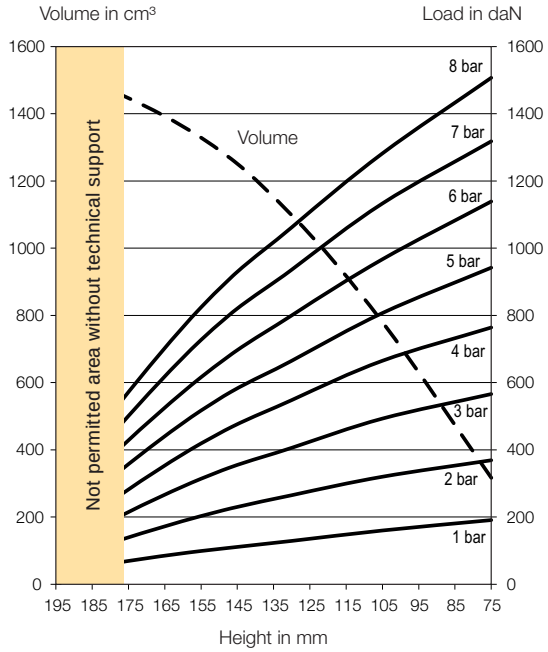

Order Code

Materials	Cups	Standard cups	Stainless steel cups
Standard temperature NR	Aluminium	**9 109 001A**	-
High temperature CR		**9 109 201A**	-
Extreme high temp. ECO		On request	-

Technical data

Air port inlet	G1/2"
Rec / Max pressure [bar]	5,5 / 8
Force [N] @ 0 bar to H (mm)	170 (75)
Weight [kg]	2,70

Dimensions [mm]

Ø maxi.	175
Øe	190
H static	130
H min.	75
H max.	195
H recommended	175

Fastening torque [Nm]

G1/2"	25 Nm
M8	12 Nm
-	-

Dynamic characteristic values

Pressure p [bar]	2	4	6
Force (load) [kN]	175	365	560
Stiffness [daN/cm]	44,1	79,4	114,0
Natural frequency [Hz]	2,5	2,3	2,3
Vol. V [cm³]	1550	1610	1660
H2 rec for isolation [mm]	160	160	160

Misalignment for H between [mm]

Axial	A = 5 mm	100 to 175
	A = 10 mm	110 to 165
Angular	Angle α = 5°	-
	Angle α = 10°	95 to 160
	Angle α = 15°	100 to 155

Static characteristic values

Pressure p [bar]		Force F [daN]						
		3	4	5	6	7	8	Vol. V [cm³]
Height H [mm]	**75**	566	764	942	1139	1318	1507	317
	105	493	665	807	967	1133	1282	780
	130	406	548	665	800	936	1062	1098
	155	314	419	517	616	727	824	1329
	195	111	142	191	234	265	310	1549
	-	-	-	-	-	-	-	-
	-	-	-	-	-	-	-	-

Tel: +45 63 12 83 00 | Email: ps@hymatik.com | www.hymatik.com | Hvidkaervej 27a, DK-5250 Odense SV, Denmark

Type x Number of Convolution: **6" x 3, Ø 150**

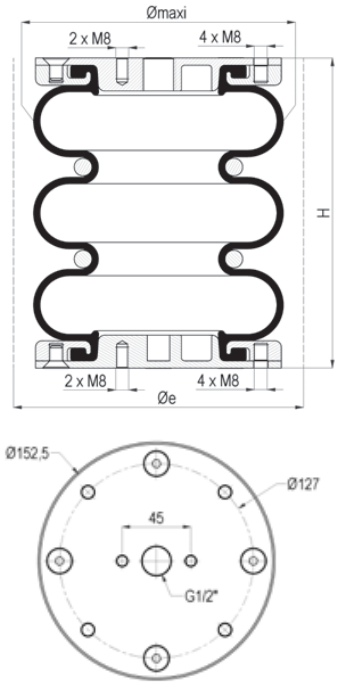

Adiabatic characteristic curves / Dynamic movements

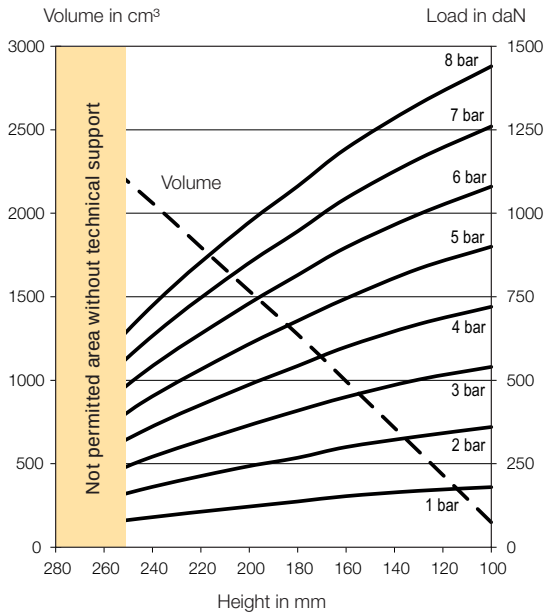

Order Code

Materials	Cups	Standard cups	Stainless steel cups
Standard temperature NR	Aluminium	**9 109 007A**	-
High temperature CR		**9 109 207A**	-
Extreme high temp. ECO		On request	-

Technical data

Air port inlet	G1/2"
Rec / Max pressure [bar]	5,5 / 8
Force [N] @ 0 bar to H (mm)	230 (100)
Weight [kg]	3,00

Dimensions [mm]

Ø maxi.	175
Øe	190
H static	190
H min.	100
H max.	280
H recommended	255

Fastening torque [Nm]

G1/2"	25 Nm
M8	12 Nm
-	-

Dynamic characteristic values

Pressure p [bar]	2	4	6
Force (load) [kN]	175	365	560
Stiffness [daN/cm]	29,9	54,0	77,3
Natural frequency [Hz]	2,1	1,9	1,9
Vol. V [cm³]	2160	2300	2400
H2 rec for isolation [mm]	230	230	230

Misalignment for H between [mm]

Axial	A = 5 mm	115 to 250
	A = 10 mm	105 to 230
Angular	Angle α = 5°	195 to 255
	Angle α = 10°	200 to 250
	Angle α = 15°	-

Static characteristic values

Pressure p [bar]		Force F [daN]						
		3	4	5	6	7	8	Vol. V [cm³]
Height H [mm]	**100**	540	720	900	1080	1260	1440	150
	130	502	668	834	997	1163	1327	575
	160	450	600	745	898	1045	1194	995
	180	409	543	678	815	946	1081	1275
	205	354	472	590	708	826	944	1600
	245	258	344	430	516	602	688	2125
	280	150	200	250	300	350	400	2550

Tel: +45 63 12 83 00 | Email: ps@hymatik.com | www.hymatik.com | Hvidkaervej 27a, DK-5250 Odense SV, Denmark

Type x Number of Convolution: **6" x 1, Ø 150**

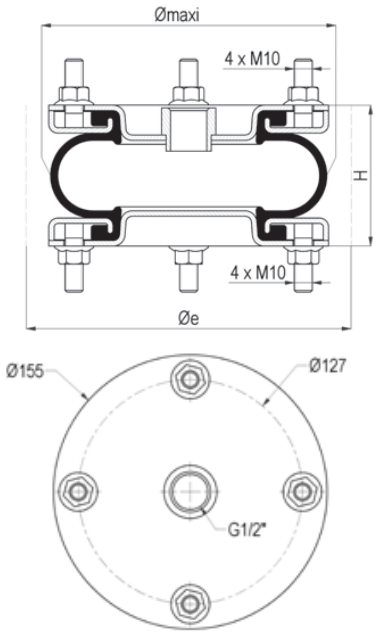

Adiabatic characteristic curves / Dynamic movements

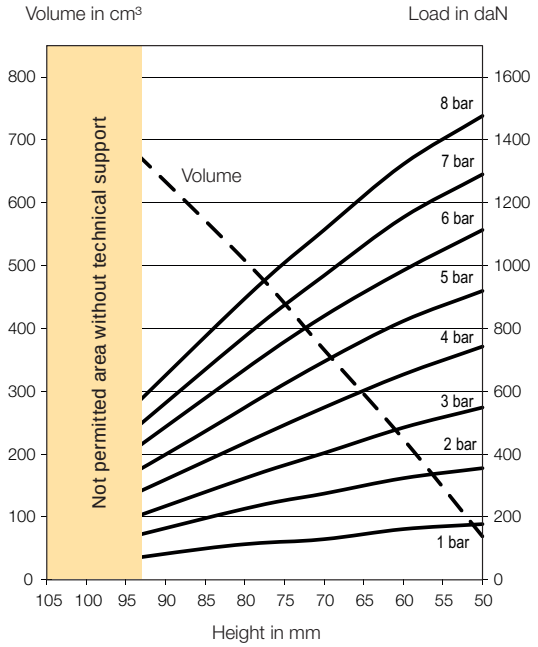

Order Code

Materials	Cups	Standard cups	Stainless steel cups
Standard temperature NR	Steel or stainless steel	**9 109 004**	**9 109 004N**
High temperature CR		**9 109 204**	**9 109 204N**
Extreme high temp. ECO		On request	On request

Technical data

Air port inlet	G1/2"
Rec / Max pressure [bar]	5,5 / 8
Force [N] @ 0 bar to H (mm)	250 (50)
Weight [kg]	2,50

Dimensions [mm]

Ø maxi.	175
Øe	190
H static	80
H min.	50
H max.	105
H recommended	95

Fastening torque [Nm]

G1/2"	25 Nm
M10	25 Nm
-	-

Dynamic characteristic values

Pressure p [bar]	2	4	6
Force (load) [kN]	170	365	570
Stiffness [daN/cm]	94,3	174,0	249,0
Natural frequency [Hz]	3,7	3,4	3,3
Vol. V [cm³]	760	780	810
H2 rec for isolation [mm]	85	85	85

Misalignment for H between [mm]

Axial	A = 5 mm	65 to 95
	A = 10 mm	75 to 85
Angular	Angle α = 5°	65 to 90
	Angle α = 10°	70 to 85
	Angle α = 15°	-

Static characteristic values

Pressure p [bar]		Force F [daN]						
		3	4	5	6	7	8	Vol. V [cm³]
Height H [mm]	**50**	548	742	919	1113	1290	1476	69
	60	484	653	823	984	1153	1322	224
	70	403	548	694	839	968	1113	366
	80	323	435	548	669	774	895	508
	105	97	145	177	210	242	276	817
	-	-	-	-	-	-	-	-
	-	-	-	-	-	-	-	-

Tel: +45 63 12 83 00 | Email: ps@hymatik.com | www.hymatik.com | Hvidkaervej 27a, DK-5250 Odense SV, Denmark

Type x Number of Convolution: **6" x 2, Ø 150**

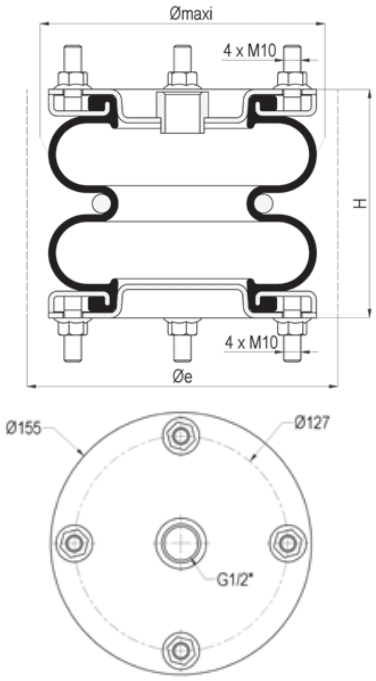

Adiabatic characteristic curves / Dynamic movements

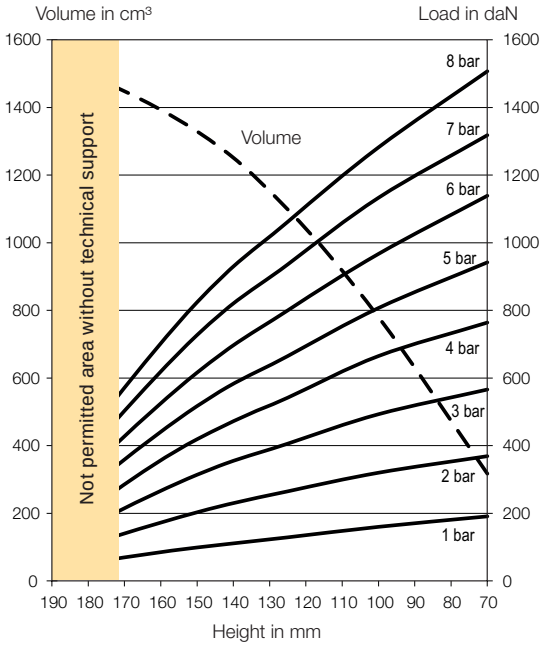

Order Code

Materials	Cups	Standard cups	Stainless steel cups
Standard temperature NR	Steel or stainless steel	**9 109 001**	**9 109 001N**
High temperature CR		**9 109 201**	**9 109 201N**
Extreme high temp. ECO		On request	On request

Technical data

Air port inlet	G1/2"
Rec / Max pressure [bar]	5,5 / 8
Force [N] @ 0 bar to H (mm)	170 (70)
Weight [kg]	2,70

Dimensions [mm]

Ø maxi.	175
Øe	190
H static	130
H min.	70
H max.	190
H recommended	170

Fastening torque [Nm]

G1/2"	25 Nm
M10	25 Nm
-	-

Dynamic characteristic values

Pressure p [bar]	2	4	6
Force (load) [kN]	180	375	575
Stiffness [daN/cm]	45,5	81,7	116,9
Natural frequency [Hz]	2,5	2,3	2,3
Vol. V [cm³]	1530	1590	1640
H2 rec for isolation [mm]	150	150	150

Misalignment for H between [mm]

Axial	A = 5 mm	100 to 175
	A = 10 mm	110 to 165
Angular	Angle α = 5°	-
	Angle α = 10°	95 to 160
	Angle α = 15°	100 to 155

Static characteristic values

		Force F [daN]						
Pressure p [bar]		**3**	**4**	**5**	**6**	**7**	**8**	**Vol. V [cm³]**
Height H [mm]	**70**	566	764	942	1139	1318	1507	317
	100	493	665	807	967	1133	1282	780
	125	406	542	665	800	936	1062	1098
	150	314	419	517	616	727	824	1329
	190	111	142	191	234	265	310	1549
	-	-	-	-	-	-	-	-
	-	-	-	-	-	-	-	-

Tel: +45 63 12 83 00 | Email: ps@hymatik.com | www.hymatik.com | Hvidkaervej 27a, DK-5250 Odense SV, Denmark

Type x Number of Convolution: **6" x 3, Ø 150**

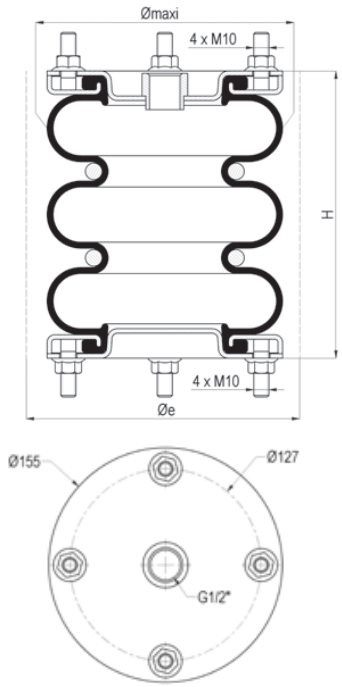

Adiabatic characteristic curves / Dynamic movements

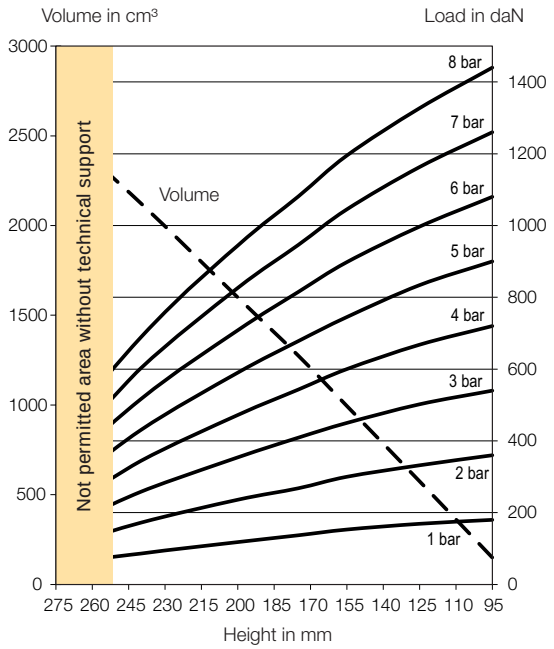

Order Code

Materials	Cups	Standard cups	Stainless steel cups
Standard temperature NR	Steel or stainless steel	**9 109 007**	**9 109 007N**
High temperature CR		**9 109 207**	**9 109 207N**
Extreme high temp. ECO		On request	On request

Technical data

Air port inlet	G1/2"
Rec / Max pressure [bar]	5,5 / 8
Force [N] @ 0 bar to H (mm)	230 (95)
Weight [kg]	3,00

Dimensions [mm]

Ø maxi.	175
Øe	190
H static	190
H min.	95
H max.	275
H recommended	250

Fastening torque [Nm]

G1/2"	25 Nm
M10	25 Nm
-	-

Dynamic characteristic values

Pressure p [bar]	2	4	6
Force (load) [kN]	170	360	545
Stiffness [daN/cm]	29,1	52,7	75,5
Natural frequency [Hz]	2,1	1,9	1,9
Vol. V [cm³]	2170	2300	2420
H2 rec for isolation [mm]	225	225	225

Misalignment for H between [mm]

Axial	A = 5 mm	115 to 250
	A = 10 mm	105 to 230
Angular	Angle α = 5°	195 to 255
	Angle α = 10°	200 to 250
	Angle α = 15°	-

Static characteristic values

Pressure p [bar]		Force F [daN]						
		3	4	5	6	7	8	Vol. V [cm³]
Height H [mm]	**95**	540	720	900	1080	1260	1440	150
	125	502	668	834	997	1163	1327	575
	155	450	600	745	898	1045	1195	995
	175	409	543	678	815	946	1081	1275
	200	354	472	590	708	826	944	1600
	240	258	344	430	516	602	688	2125
	275	150	200	250	300	350	400	2550

Type x Number of Convolution: **8" x 1, Ø 150**

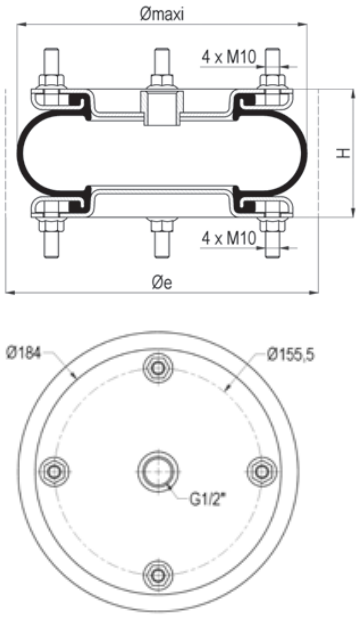

Adiabatic characteristic curves / Dynamic movements

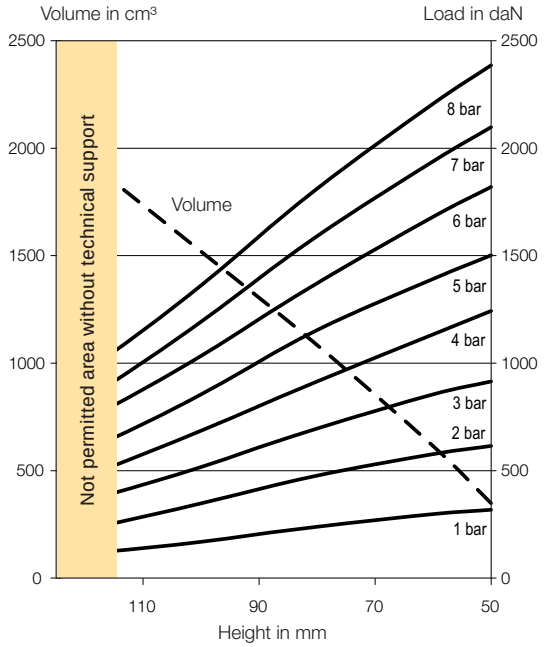

Order Code

Materials	Cups	Standard cups	Stainless steel cups
Standard temperature NR	Steel or stainless steel	**9 109 014**	**9 109 014N**
High temperature CR		**9 109 214**	**9 109 214N**
Extreme high temp. ECO		On request	On request

Technical data

Air port inlet	G1/2"
Rec / Max pressure [bar]	5,5 / 8
Force [N] @ 0 bar to H (mm)	220 (50)
Weight [kg]	3,05

Dimensions [mm]

Ø maxi.	230
Øe	245
H static	90
H min.	50
H max.	125
H recommended	115

Fastening torque [Nm]

G1/2"	25 Nm
M10	25 Nm
-	-

Dynamic characteristic values

Pressure p [bar]	2	4	6
Force (load) [kN]	355	725	1105
Stiffness [daN/cm]	134,0	237,9	342,1
Natural frequency [Hz]	3,1	2,9	2,8
Vol. V [cm³]	1830	1900	1960
H2 rec for isolation [mm]	100	100	100

Misalignment for H between [mm]

Axial	A = 5 mm	70 to 120
	A = 10 mm	65 to 115
Angular	Angle α = 5°	60 to 105
	Angle α = 10°	70 to 100
	Angle α = 15°	-

Static characteristic values

		Force F [daN]						
Pressure p [bar]		**3**	**4**	**5**	**6**	**7**	**8**	**Vol. V [cm³]**
Height H [mm]	**50**	915	1243	1502	1820	2098	2386	752
	60	855	1134	1392	1681	1939	2207	1037
	80	696	915	1154	1372	1591	1812	1541
	100	517	686	855	1034	1193	1362	1968
	125	318	418	527	656	736	851	2390
	-	-	-	-	-	-	-	-
	-	-	-	-	-	-	-	-

Tel: +45 63 12 83 00 | Email: ps@hymatik.com | www.hymatik.com | Hvidkaervej 27a, DK-5250 Odense SV, Denmark

Type x Number of Convolution: **8" x 2, Ø 200**

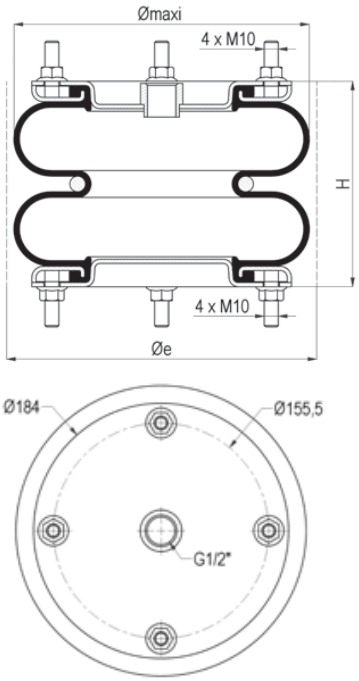

Adiabatic characteristic curves / Dynamic movements

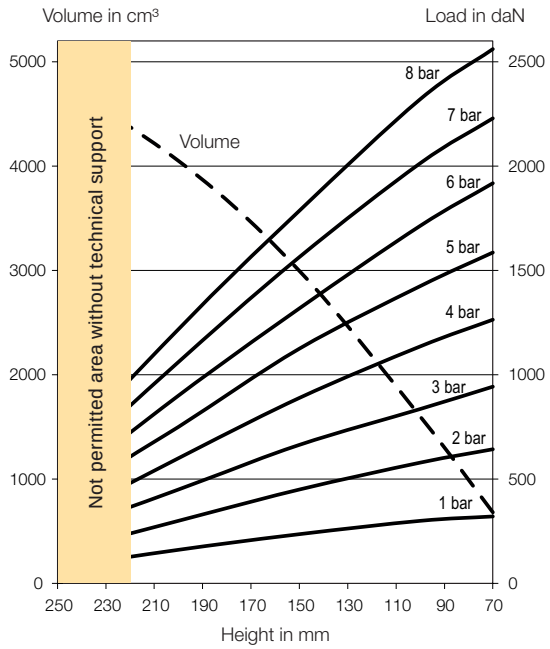

Order Code

Materials	Cups	Standard cups	Stainless steel cups
Standard temperature NR	Steel or stainless steel	**9 109 011**	**9 109 011N**
High temperature CR		**9 109 211**	**9 109 211N**
Extreme high temp. ECO		On request	On request

Technical data

Air port inlet	G1/2"
Rec / Max pressure [bar]	5,5 / 8
Force [N] @ 0 bar to H (mm)	350 (80)
Weight [kg]	3,75

Dimensions [mm]

Ø maxi.	230
Øe	245
H static	160
H min.	70
H max.	250
H recommended	220

Fastening torque [Nm]

G1/2"	25 Nm
M10	25 Nm
-	-

Dynamic characteristic values

Pressure p [bar]	2	4	6
Force (load) [kN]	265	545	840
Stiffness [daN/cm]	48,8	88,2	128,1
Natural frequency [Hz]	2,2	2,0	2,0
Vol. V [cm³]	3420	3540	3660
H2 rec for isolation [mm]	200	200	200

Misalignment for H between [mm]

Axial	A = 5 mm	85 to 240
	A = 10 mm	95 to 230
Angular	Angle α = 5°	90 to 210
	Angle α = 10°	95 to 205
	Angle α = 15°	-

Static characteristic values

Pressure p [bar]		Force F [daN]						
		3	4	5	6	7	8	Vol. V [cm³]
Height H [mm]	**70**	943	1264	1586	1918	2229	2561	680
	100	836	1136	1425	1714	2014	2321	1598
	150	664	889	1125	1318	1564	1786	2995
	200	450	600	750	900	1061	1218	4050
	250	236	300	386	450	536	608	4785
	-	-	-	-	-	-	-	-
	-	-	-	-	-	-	-	-

Tel: +45 63 12 83 00 | Email: ps@hymatik.com | www.hymatik.com | Hvidkaervej 27a, DK-5250 Odense SV, Denmark

Type x Number of Convolution: **8" x 3, Ø 200**

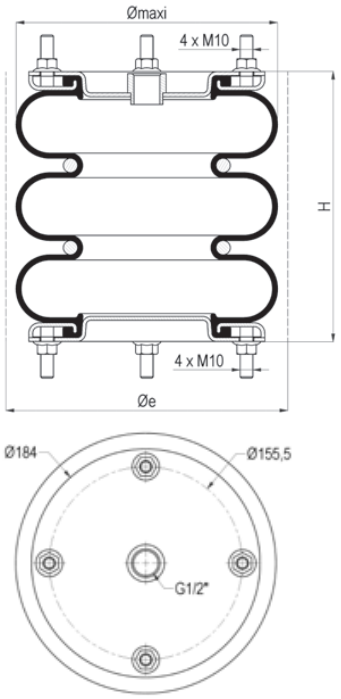

Adiabatic characteristic curves / Dynamic movements

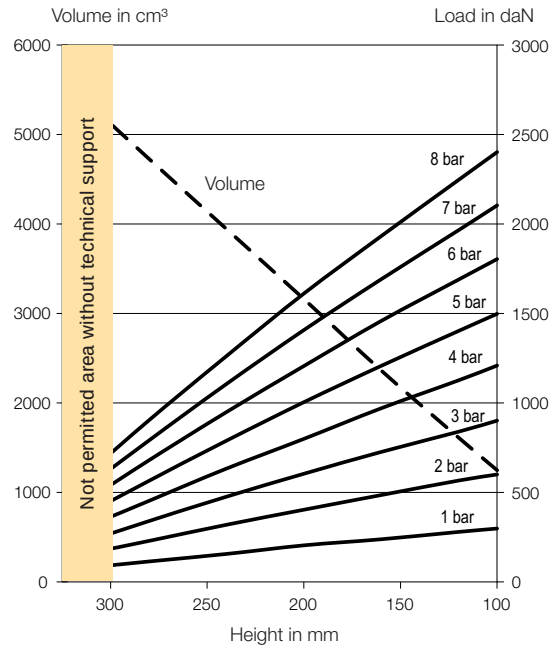

Order Code

Materials	Cups	Standard cups	Stainless steel cups
Standard temperature NR	Steel or stainless steel	**9 109 017**	**9 109 017N**
High temperature CR		**9 109 217**	**9 109 217N**
Extreme high temp. ECO		On request	-

Technical data

Air port inlet	G1/2"
Rec / Max pressure [bar]	5,5 / 8
Force [N] @ 0 bar to H (mm)	280 (100)
Weight [kg]	4,30

Dimensions [mm]

Ø maxi.	230
Øe	245
H static	205
H min.	100
H max.	300
H recommended	325

Fastening torque [Nm]

G1/2"	25 Nm
M10	25 Nm
M6	5 Nm

Dynamic characteristic values

Pressure p [bar]	2	4	6
Force (load) [kN]	250	535	820
Stiffness [daN/cm]	33,4	60,2	85,1
Natural frequency [Hz]	1,8	1,7	1,6
Vol. V [cm³]	4770	5050	5320
H2 rec for isolation [mm]	280	280	280

Misalignment for H between [mm]

Axial	A = 5 mm	110 to 280
	A = 10 mm	100 to 260
Angular	Angle α = 5°	250 to 305
	Angle α = 10°	255 to 300
	Angle α = 15°	-

Static characteristic values

		Force F [daN]						
Pressure p [bar]		**3**	**4**	**5**	**6**	**7**	**8**	**Vol. V [cm³]**
Height H [mm]	**100**	901	1209	1498	1804	2104	2402	1246
	120	839	1126	1402	1689	1965	2246	1612
	160	726	970	1207	1458	1691	1932	2362
	200	604	799	1004	1206	1407	1611	3161
	240	476	633	789	949	1106	1262	3943
	280	340	453	565	680	791	904	4726
	325	182	247	306	362	424	481	5635

Tel: +45 63 12 83 00 | Email: ps@hymatik.com | www.hymatik.com | Hvidkaervej 27a, DK-5250 Odense SV, Denmark

Type x Number of Convolution: **10" x 1, Ø 250**

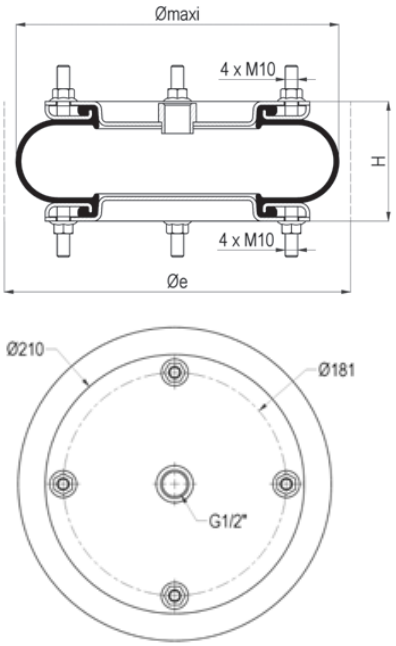

Adiabatic characteristic curves / Dynamic movements

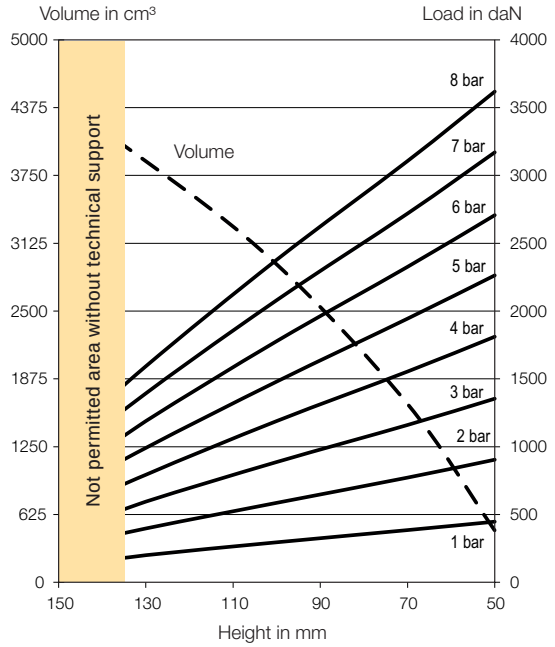

Order Code

Materials	Cups	Standard cups	Stainless steel cups
Standard temperature NR	Steel or stainless steel	**9 109 024**	**9 109 024N**
High temperature CR		**9 109 224**	**9 109 224N**
Extreme high temp. ECO		On request	On request

Technical data

Air port inlet	G1/2"
Rec / Max pressure [bar]	5,5 / 8
Force [N] @ 0 bar to H (mm)	150 (50)
Weight [kg]	3,90

Dimensions [mm]

Ø maxi.	280
Øe	300
H static	100
H min.	50
H max.	150
H recommended	135

Fastening torque [Nm]

G1/2"	25 Nm
M10	25 Nm
-	-

Dynamic characteristic values

Pressure p [bar]	2	4	6
Force (load) [kN]	505	1045	1580
Stiffness [daN/cm]	150,0	271,0	385,0
Natural frequency [Hz]	2,7	2,5	2,5
Vol. V [cm³]	3370	3530	3690
H2 rec for isolation [mm]	120	120	120

Misalignment for H between [mm]

Axial	A = 5 mm	65 to 145
	A = 10 mm	70 to 135
Angular	Angle α = 5°	70 to 115
	Angle α = 10°	80 to 105
	Angle α = 15°	-

Static characteristic values

Pressure p [bar]		Force F [daN]						
		3	4	5	6	7	8	Vol. V [cm³]
Height H [mm]	**50**	1354	1811	2263	2707	3170	3618	479
	70	1160	1554	1944	2326	2719	3106	1645
	100	887	1189	1480	1778	2080	2378	2930
	130	595	793	991	1189	1393	1593	3880
	150	372	495	634	758	883	1015	4442
	-	-	-	-	-	-	-	-
	-	-	-	-	-	-	-	-

Tel: +45 63 12 83 00 | Email: ps@hymatik.com | www.hymatik.com | Hvidkaervej 27a, DK-5250 Odense SV, Denmark

Type x Number of Convolution: **10" x 2, Ø 250**

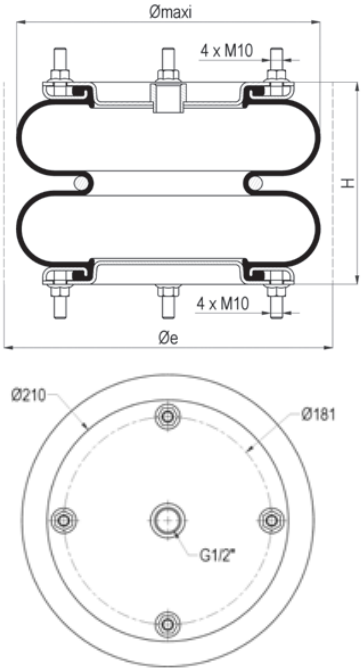

Adiabatic characteristic curves / Dynamic movements

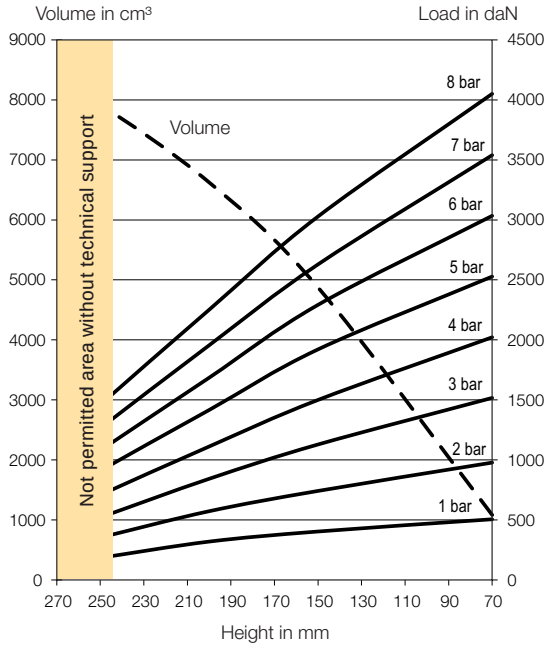

Order Code

Materials	Cups	Standard cups	Stainless steel cups
Standard temperature NR	Steel or stainless steel	**9 109 021**	**9 109 021N**
High temperature CR		**9 109 221**	**9 109 221N**
Extreme high temp. ECO		On request	On request

Technical data

Air port inlet	G1/2"
Rec / Max pressure [bar]	5,5 / 8
Force [N] @ 0 bar to H (mm)	200 (75)
Weight [kg]	5,00

Dimensions [mm]

Ø maxi.	280
Øe	300
H static	170
H min.	70
H max.	270
H recommended	245

Fastening torque [Nm]

G1/2"	25 Nm
M10	25 Nm
-	-

Dynamic characteristic values

Pressure p [bar]	2	4	6
Force (load) [kN]	470	960	1455
Stiffness [daN/cm]	70,2	125,4	178,8
Natural frequency [Hz]	1,90	1,75	1,75
Vol. V [cm³]	6220	6440	6670
H2 rec for isolation [mm]	220	220	220

Misalignment for H between [mm]

Axial	A = 5 mm	95 to 270
	A = 10 mm	105 to 200
Angular	Angle α = 5°	
	Angle α = 10°	95 to 260
	Angle α = 15°	115 to 250

Static characteristic values

		Force F [daN]						
Pressure p [bar]		**3**	**4**	**5**	**6**	**7**	**8**	**Vol. V [cm³]**
Height H [mm]	**70**	1517	2022	2528	3034	3539	4050	1083
	150	1129	1500	1921	2292	2629	3028	4875
	200	843	1112	1416	1685	1955	2251	6625
	250	522	708	910	1079	1264	1459	7917
	270	404	539	691	826	978	1128	8208
	-	-	-	-	-	-	-	-
	-	-	-	-	-	-	-	-

Tel: +45 63 12 83 00 | Email: ps@hymatik.com | www.hymatik.com | Hvidkaervej 27a, DK-5250 Odense SV, Denmark

Type x Number of Convolution: **10" x 3, Ø 250**

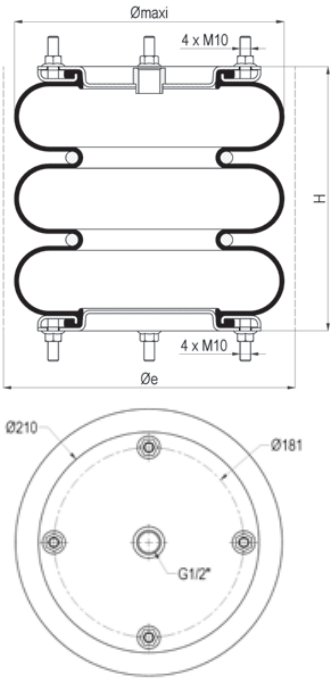

Adiabatic characteristic curves / Dynamic movements

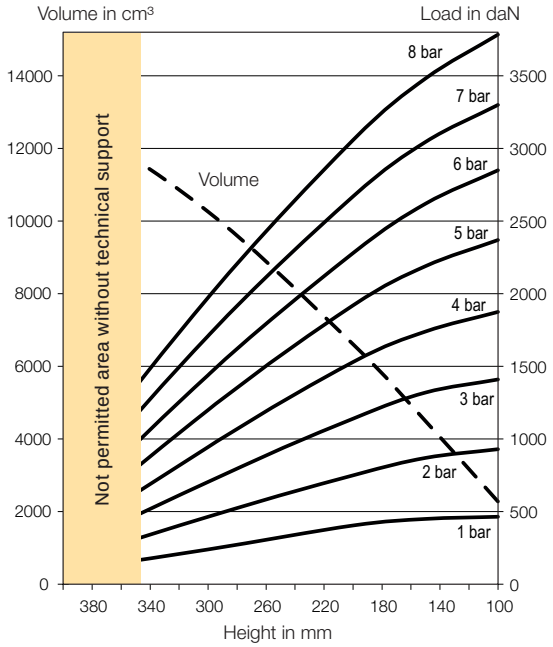

Order Code

Materials	Cups	Standard cups	Stainless steel cups
Standard temperature NR	Steel or stainless steel	**9 109 031**	**9 109 031N**
High temperature CR		**9 109 231**	**9 109 231N**
Extreme high temp. ECO		On request	On request

Technical data

Air port inlet	G1/2"
Rec / Max pressure [bar]	5,5 / 8
Force [N] @ 0 bar to H (mm)	250 (100)
Weight [kg]	5,60

Dimensions [mm]

Ø maxi.	280
Øe	300
H static	250
H min.	100
H max.	400
H recommended	350

Fastening torque [Nm]

G1/2"	25 Nm
M10	25 Nm
-	-

Dynamic characteristic values

Pressure p [bar]	2	4	6
Force (load) [kN]	435	875	1340
Stiffness [daN/cm]	44,0	76,0	110,0
Natural frequency [Hz]	1,6	1,5	1,4
Vol. V [cm³]	9320	9650	9980
H2 rec for isolation [mm]	320	320	320

Misalignment for H between [mm]

Axial	A = 5 mm	175 to 390
	A = 10 mm	165 to 380
Angular	Angle α = 5°	245 to 370
	Angle α = 10°	280 to 350
	Angle α = 15°	-

Static characteristic values

Pressure p [bar]		Force F [daN]						
		3	4	5	6	7	8	Vol. V [cm³]
Height H [mm]	**100**	1410	1875	2370	2850	3300	3784	2279
	150	1320	1740	2190	2620	3045	3482	4494
	200	1140	1530	1920	2280	2670	3058	6609
	300	705	945	1200	1440	1710	1974	10256
	400	240	300	390	480	600	707	12981
	-	-	-	-	-	-	-	-
	-	-	-	-	-	-	-	-

Tel: +45 63 12 83 00 | Email: ps@hymatik.com | www.hymatik.com | Hvidkaervej 27a, DK-5250 Odense SV, Denmark

Type x Number of Convolution: **12" x 1, Ø 300**

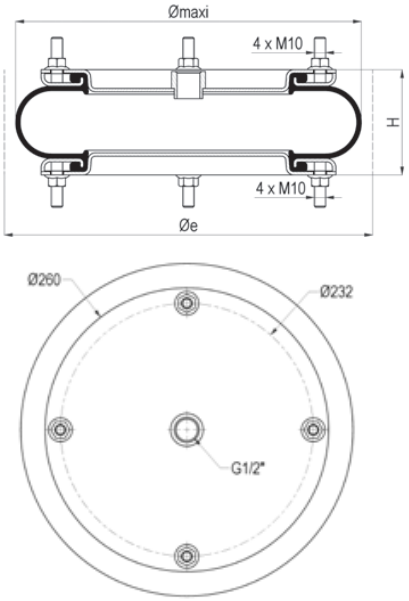

Adiabatic characteristic curves / Dynamic movements

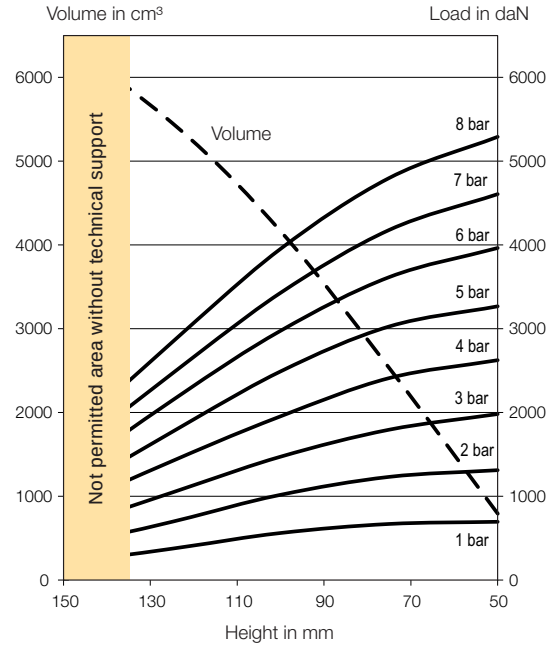

Order Code

Materials	Cups	Standard cups	Stainless steel cups
Standard temperature NR	Steel or stainless steel	**9 109 044**	**9 109 044N**
High temperature CR		**9 109 244**	**9 109 244N**
Extreme high temp. ECO		On request	On request

Technical data

Air port inlet	G1/2"
Rec / Max pressure [bar]	5,5 / 8
Force [N] @ 0 bar to H (mm)	280 (50)
Weight [kg]	5,20

Dimensions [mm]

Ø maxi.	330
Øe	350
H static	100
H min.	50
H max.	150
H recommended	135

Fastening torque [Nm]

G1/2"	25 Nm
M10	25 Nm
-	-

Dynamic characteristic values

Pressure p [bar]	2	4	6
Force (load) [kN]	795	1625	2455
Stiffness [daN/cm]	230,0	413,0	588,0
Natural frequency [Hz]	2,7	2,5	2,4
Vol. V [cm³]	4950	5120	5280
H2 rec for isolation [mm]	120	120	120

Misalignment for H between [mm]

Axial	A = 5 mm	70 to 135
	A = 10 mm	80 to 130
Angular	Angle α = 5°	75 to 115
	Angle α = 10°	90 to 105
	Angle α = 15°	-

Static characteristic values

		Force F [daN]						
Pressure p [bar]		**3**	**4**	**5**	**6**	**7**	**8**	**Vol. V [cm³]**
Height H [mm]	**50**	1982	2625	3268	3964	4607	5291	792
	75	1795	2411	3027	3616	4179	4799	2532
	100	1473	1955	2491	2976	3429	3954	4165
	125	1045	1420	1768	2143	2464	2838	5459
	150	616	857	991	1232	1446	1637	6407
	-	-	-	-	-	-	-	-
	-	-	-	-	-	-	-	-

Tel: +45 63 12 83 00 | Email: ps@hymatik.com | www.hymatik.com | Hvidkaervej 27a, DK-5250 Odense SV, Denmark

Type x Number of Convolution: **12" x 2, Ø 300**

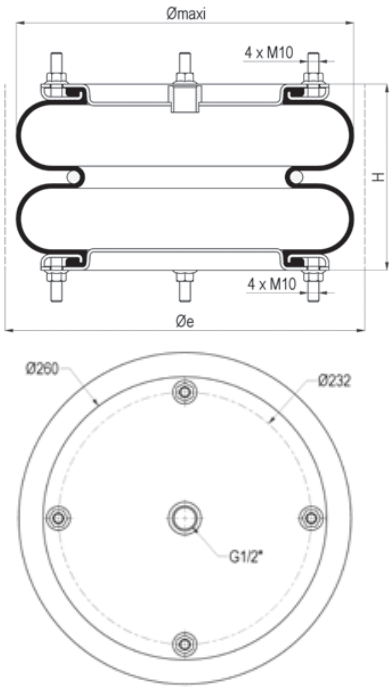

Adiabatic characteristic curves / Dynamic movements

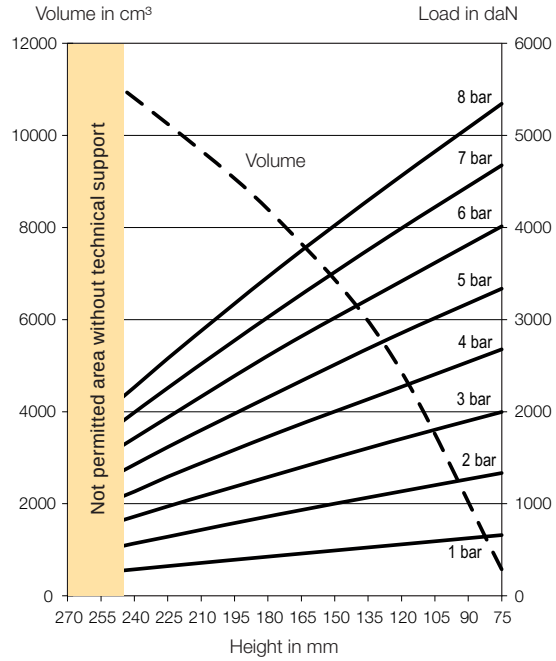

Order Code

Materials	Cups	Standard cups	Stainless steel cups
Standard temperature NR	Steel or stainless steel	**9 109 041**	**9 109 041N**
High temperature CR		**9 109 241**	**9 109 241N**
Extreme high temp. ECO		On request	On request

Technical data

Air port inlet	G1/2"
Rec / Max pressure [bar]	5,5 / 8
Force [N] @ 0 bar to H (mm)	170 (75)
Weight [kg]	6,70

Dimensions [mm]

Ø maxi.	330
Øe	350
H static	170
H min.	75
H max.	270
H recommended	245

Fastening torque [Nm]

G1/2"	25 Nm
M10	25 Nm
-	-

Dynamic characteristic values

Pressure p [bar]	2	4	6
Force (load) [kN]	700	1465	2225
Stiffness [daN/cm]	109,0	200,0	285,0
Natural frequency [Hz]	2,0	1,8	1,8
Vol. V [cm³]	9190	9520	9850
H2 rec for isolation [mm]	220	220	220

Misalignment for H between [mm]

Axial	A = 5 mm	95 to 280
	A = 10 mm	105 to 270
Angular	Angle α = 5°	100 to 255
	Angle α = 10°	110 to 245
	Angle α = 15°	-

Static characteristic values

		Force F [daN]						
Pressure p [bar]		**3**	**4**	**5**	**6**	**7**	**8**	**Vol. V [cm³]**
Height H [mm]	**75**	1997	2677	3336	4013	4676	5344	576
	125	1673	2225	2799	3351	3914	4474	5266
	175	1326	1776	2216	2679	3109	3560	8154
	225	972	1294	1616	1938	2258	2578	10250
	270	627	836	1038	1250	1448	1654	11902
	-	-	-	-	-	-	-	-
	-	-	-	-	-	-	-	-

Tel: +45 63 12 83 00 | Email: ps@hymatik.com | www.hymatik.com | Hvidkaervej 27a, DK-5250 Odense SV, Denmark

Type x Number of Convolution: **12" x 3, Ø 300**

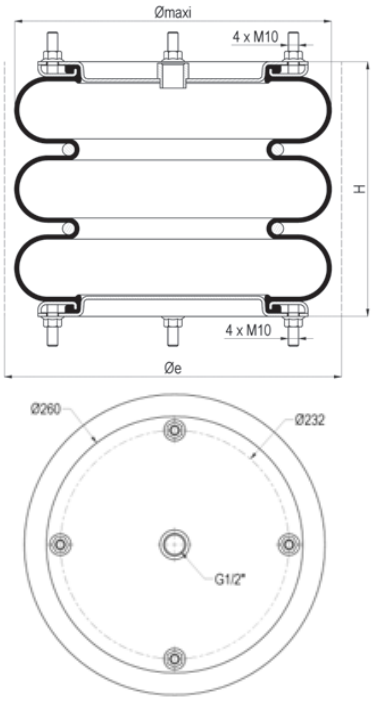

Adiabatic characteristic curves / Dynamic movements

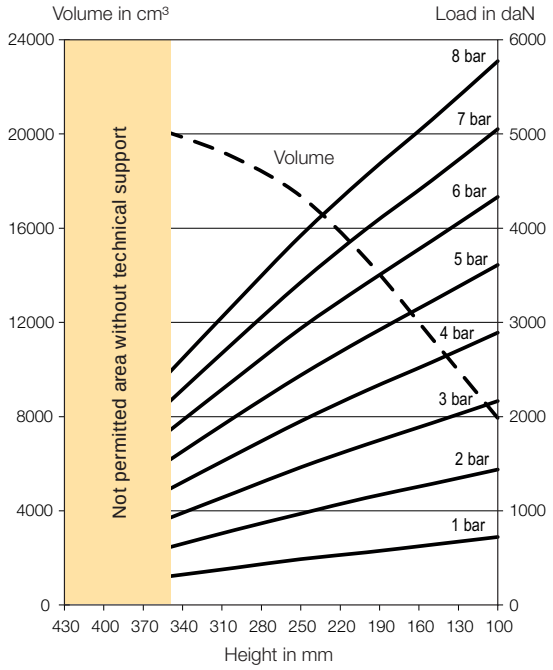

Order Code

Materials	Cups	Standard cups	Stainless steel cups
Standard temperature NR	Steel or stainless steel	**9 109 051**	**9 109 051N**
High temperature CR		**9 109 251**	**9 109 251N**
Extreme high temp. ECO		On request	On request

Technical data

Air port inlet	G1/2"
Rec / Max pressure [bar]	5,5 / 8
Force [N] @ 0 bar to H (mm)	400 (100)
Weight [kg]	8,10

Dimensions [mm]

Ø maxi.	330
Øe	350
H static	250
H min.	100
H max.	430
H recommended	350

Fastening torque [Nm]

G1/2"	25 Nm
M10	25 Nm
-	-

Dynamic characteristic values

Pressure p [bar]	2	4	6
Force (load) [kN]	750	1510	2275
Stiffness [daN/cm]	76,0	133,0	189,0
Natural frequency [Hz]	1,6	1,5	1,4
Vol. V [cm³]	14320	14830	15340
H2 rec for isolation [mm]	320	320	320

Misalignment for H between [mm]

Axial	A = 5 mm	140 to 410
	A = 10 mm	150 to 400
Angular	Angle α = 5°	230 to 340
	Angle α = 10°	250 to 310
	Angle α = 15°	-

Static characteristic values

		Force F [daN]						
Pressure p [bar]		3	4	5	6	7	8	Vol. V [cm³]
Height H [mm]	**100**	2165	2891	3610	4332	5052	5773	7948
	150	1932	2578	3225	3868	4509	5152	11318
	200	1704	2277	2844	3413	3993	4561	14685
	250	1462	1951	2439	2936	3425	3921	17360
	300	1193	1595	1998	2397	2800	3202	18982
	350	924	1231	1539	1851	2159	2469	20046
	400	648	862	1081	1298	1513	1731	20832
	430	483	645	805	967	1126	1286	21310

Tel: +45 63 12 83 00 | Email: ps@hymatik.com | www.hymatik.com | Hvidkaervej 27a, DK-5250 Odense SV, Denmark

Type x Number of Convolution: **14.1/2" x 1, Ø 370**

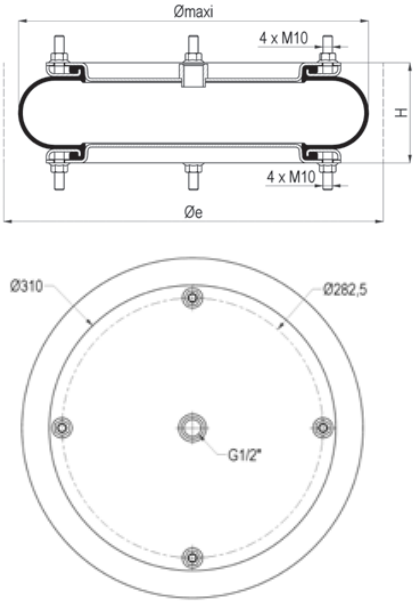

Adiabatic characteristic curves / Dynamic movements

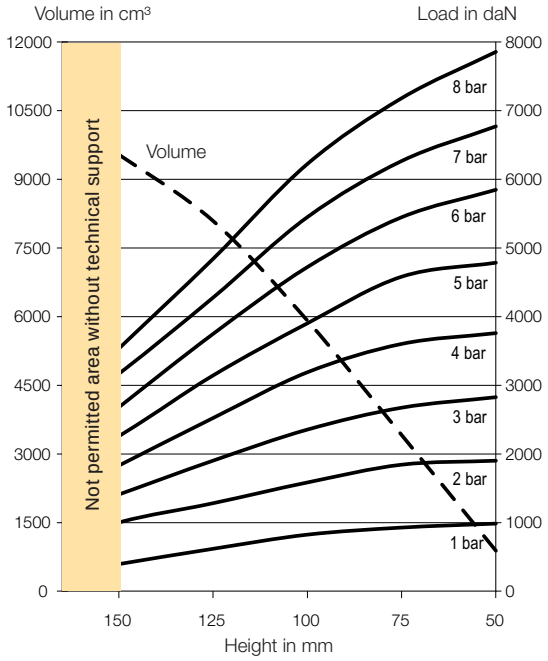

Order Code

Materials	Cups	Standard cups	Stainless steel cups
Standard temperature NR	Steel or stainless steel	**9 109 064**	**9 109 064N**
High temperature CR		**9 109 264**	**9 109 264N**
Extreme high temp. ECO		On request	On request

Technical data

Air port inlet	G1/2"
Rec / Max pressure [bar]	5,5 / 8
Force [N] @ 0 bar to H (mm)	360 (50)
Weight [kg]	6,90

Dimensions [mm]

Ø maxi.	395
Øe	425
H static	110
H min.	50
H max.	165
H recommended	150

Fastening torque [Nm]

G1/2"	25 Nm
M10	25 Nm
-	-

Dynamic characteristic values

Pressure p [bar]	2	4	6
Force (load) [kN]	1325	2635	3940
Stiffness [daN/cm]	328,0	559,0	784,0
Natural frequency [Hz]	2,5	2,3	2,2
Vol. V [cm³]	8660	8,70	9,80
H2 rec for isolation [mm]	130	130	130

Misalignment for H between [mm]

Axial	A = 5 mm	105 to 170
	A = 10 mm	85 to 160
Angular	Angle α = 5°	65 to 145
	Angle α = 10°	85 to 135
	Angle α = 15°	-

Static characteristic values

Pressure p [bar]		Force F [daN]						
		3	4	5	6	7	8	Vol. V [cm³]
Height H [mm]	**50**	2826	3759	4785	5847	6771	7856	883
	75	2673	3602	4581	5447	6266	7181	3411
	100	2354	3189	3902	4721	5449	6223	5911
	125	1902	2523	3143	3748	4277	4841	8087
	150	1409	1830	2258	2679	3166	3534	9535
	165	1122	1420	1724	2018	2492	2736	10331
	-	-	-	-	-	-	-	-

Parker Hannifin Corporation
Pneumatic Division - Europe

Tel: +45 63 12 83 00 | Email: ps@hymatik.com | www.hymatik.com | Hvidkaervej 27a, DK-5250 Odense SV, Denmark

Type x Number of Convolution: **14.1/2" x 2, Ø 370**

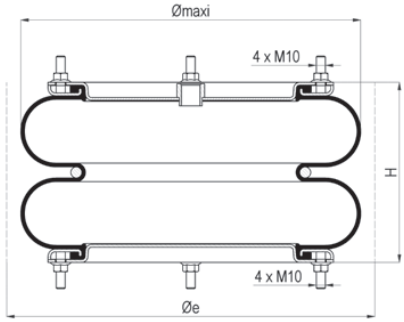

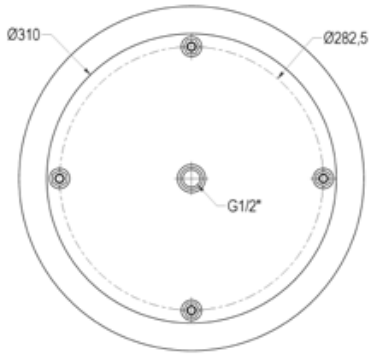

Adiabatic characteristic curves / Dynamic movements

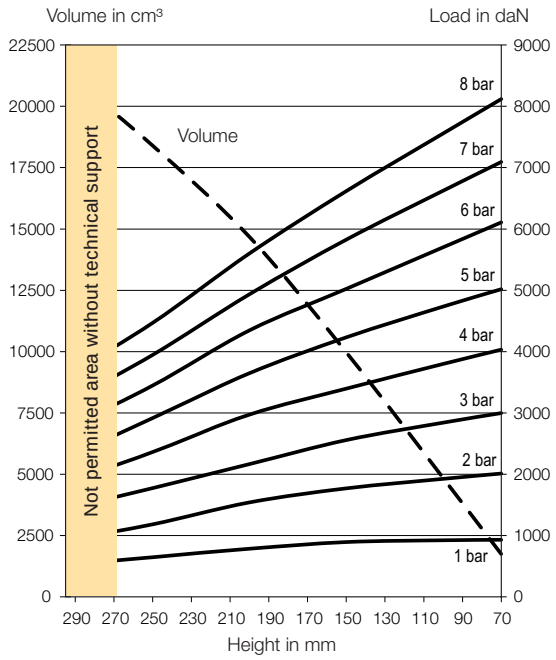

Order Code

Materials	Cups	Standard cups	Stainless steel cups
Standard temperature NR	Steel or stainless steel	**9 109 061**	**9 109 061N**
High temperature CR		**9 109 261**	**9 109 261N**
Extreme high temp. ECO		On request	On request

Technical data

Air port inlet	G1/2"
Rec / Max pressure [bar]	5,5 / 8
Force [N] @ 0 bar to H (mm)	210 (75)
Weight [kg]	9,10

Dimensions [mm]

Ø maxi.	395
Øe	425
H static	180
H min.	70
H max.	295
H recommended	270

Fastening torque [Nm]

G1/2"	25 Nm
M10	25 Nm
-	-

Dynamic characteristic values

Pressure p [bar]	2	4	6
Force (load) [kN]	1185	2380	3560
Stiffness [daN/cm]	151,0	264,0	373,0
Natural frequency [Hz]	1,8	1,7	1,6
Vol. V [cm³]	17200	17800	18400
H2 rec for isolation [mm]	250	250	250

Misalignment for H between [mm]

Axial	A = 5 mm	110 to 340
	A = 10 mm	120 to 330
Angular	Angle α = 5°	-
	Angle α = 10°	115 to 290
	Angle α = 15°	135 to 275

Static characteristic values

		Force F [daN]						
Pressure p [bar]		**3**	**4**	**5**	**6**	**7**	**8**	**Vol. V [cm³]**
Height H [mm]	**70**	2996	4031	5017	6107	7093	8119	1744
	100	2840	3798	4734	5701	6624	7558	4846
	150	2556	3395	4232	5023	5826	6618	9970
	200	2164	2971	3647	4346	4935	5601	14680
	250	1772	2361	2915	3446	3945	4468	18403
	295	1421	1869	2273	2770	3167	3609	21351
	-	-	-	-	-	-	-	-

Parker Hannifin Corporation
Pneumatic Division - Europe

Tel: +45 63 12 83 00 | Email: ps@hymatik.com | www.hymatik.com | Hvidkaervej 27a, DK-5250 Odense SV, Denmark

Type x Number of Convolution: **14.1/2" x 3, Ø 370**

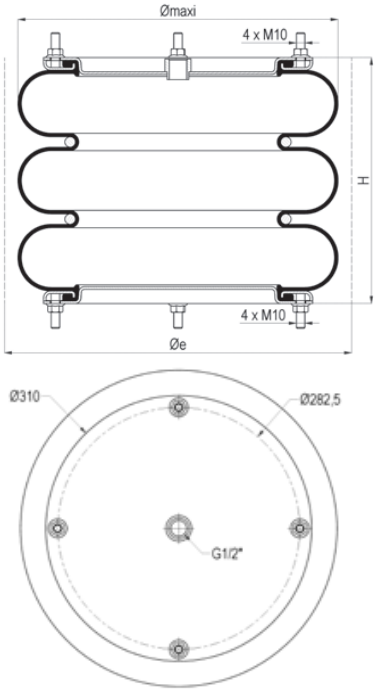

Adiabatic characteristic curves / Dynamic movements

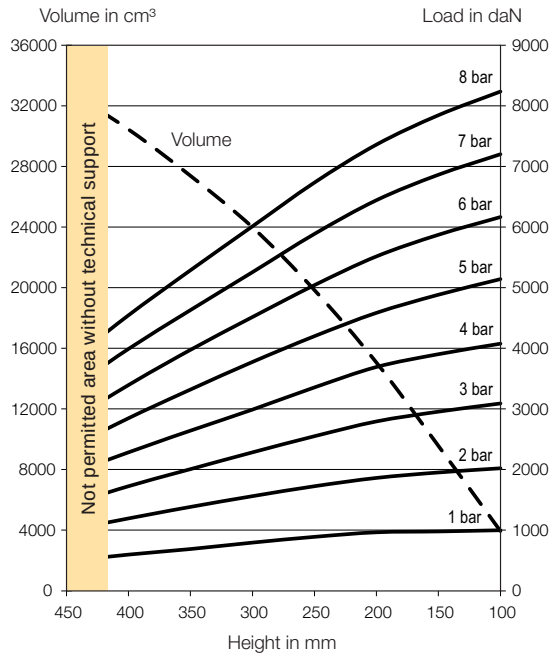

Order Code

Materials	Cups	Standard cups	Stainless steel cups
Standard temperature NR	Steel or stainless steel	**9 109 069**	**9 109 069N**
High temperature CR		**9 109 269**	**9 109 269N**
Extreme high temp. ECO		On request	On request

Technical data

Air port inlet	G1/2"
Rec / Max pressure [bar]	5,5 / 8
Force [N] @ 0 bar to H (mm)	210 (105)
Weight [kg]	10,00

Dimensions [mm]

Ø maxi.	395
Øe	425
H static	280
H min.	100
H max.	450
H recommended	420

Fastening torque [Nm]

G1/2"	25 Nm
M10	25 Nm
-	-

Dynamic characteristic values

Pressure p [bar]	2	4	6
Force (load) [kN]	1110	2235	3365
Stiffness [daN/cm]	92,0	163,0	233,0
Natural frequency [Hz]	1,4	1,4	1,3
Vol. V [cm³]	26070	26970	27860
H2 rec for isolation [mm]	370	370	370

Misalignment for H between [mm]

Axial	A = 5 mm	160 to 440
	A = 10 mm	170 to 430
Angular	Angle α = 5°	300 to 390
	Angle α = 10°	310 to 370
	Angle α = 15°	-

Static characteristic values

		Force F [daN]						
Pressure p [bar]		**3**	**4**	**5**	**6**	**7**	**8**	**Vol. V [cm³]**
Height H [mm]	**100**	3090	4076	5141	6165	7201	8235	3945
	150	2955	3903	4884	5873	6863	7845	9562
	200	2794	3692	4585	5516	6443	7360	15064
	250	2550	3355	4200	5042	5887	6734	19847
	300	2284	2989	3775	4516	5256	6012	23992
	350	2007	2642	3320	3975	4631	5288	27388
	400	1725	2284	2847	3394	3990	4545	30449
	450	1386	1896	2317	2793	3258	3708	33180

Tel: +45 63 12 83 00 | Email: ps@hymatik.com | www.hymatik.com | Hvidkaervej 27a, DK-5250 Odense SV, Denmark

Type x Number of Convolution: **16" x 1, Ø 410**

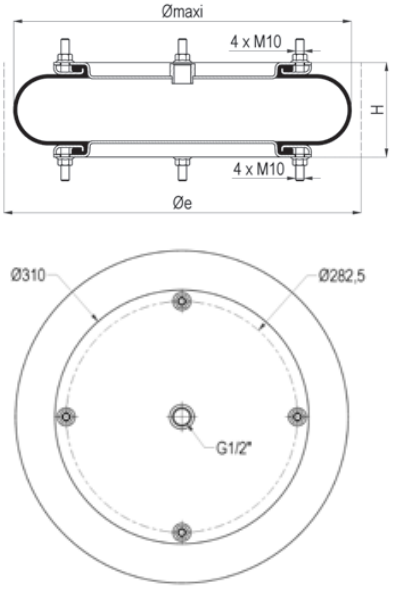

Adiabatic characteristic curves / Dynamic movements

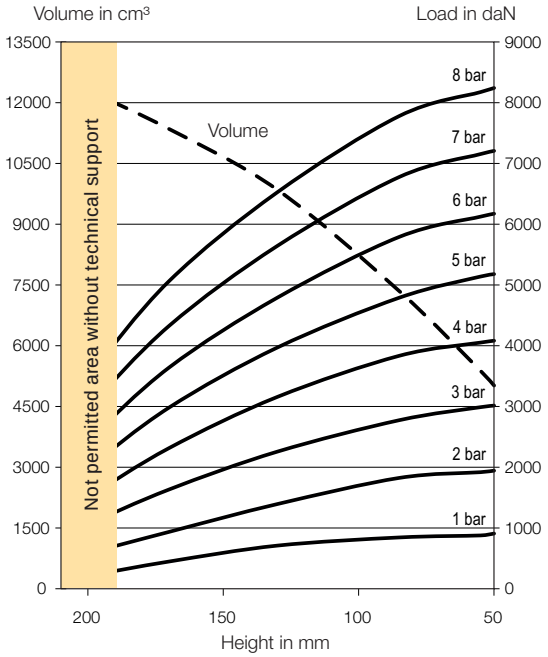

Order Code

Materials	Cups	Standard cups	Stainless steel cups
Standard temperature NR	Steel or stainless steel	**9 109 026**	**9 109 026N**
High temperature CR		**9 109 226**	**9 109 226N**
Extreme high temp. ECO		On request	On request

Technical data

Air port inlet	G1/2"
Rec / Max pressure [bar]	5,5 / 8
Force [N] @ 0 bar to H (mm)	150 (50)
Weight [kg]	7,00

Dimensions [mm]

Ø maxi.	440
Øe	450
H static	130
H min.	50
H max.	210
H recommended	190

Fastening torque [Nm]

G1/2"	25 Nm
M10	25 Nm
-	-

Dynamic characteristic values

Pressure p [bar]	2	4	6
Force (load) [kN]	1174	2770	4260
Stiffness [daN/cm]	248	513	733
Natural frequency [Hz]	2,29	2,14	2,07
Vol. V [cm³]	1065	1065	1065
H2 rec for isolation [mm]	150	150	150

Misalignment for H between [mm]

Axial	A = 5 mm	-
	A = 10 mm	85 to 195
Angular	Angle α = 5°	-
	Angle α = 10°	85 to 180
	Angle α = 15°	-

Static characteristic values

Pressure p [bar]		Force F [daN]						
		3	4	5	6	7	8	Vol. V [cm³]
Height H [mm]	**50**	3016	4084	5180	6174	7208	8243	5016
	55	2990	4053	5140	6126	7156	8176	5379
	85	2776	3836	4792	5793	6779	7782	7347
	130	2259	3160	3973	4794	5646	6529	9848
	170	1636	2318	2985	3644	4330	5067	11350
	200	1057	1500	1978	2441	2969	3493	12290
	210	806	1172	1570	2016	2455	2940	12490

Tel: +45 63 12 83 00 | Email: ps@hymatik.com | www.hymatik.com | Hvidkaervej 27a, DK-5250 Odense SV, Denmark

Type x Number of Convolution: **16" x 2, Ø 410**

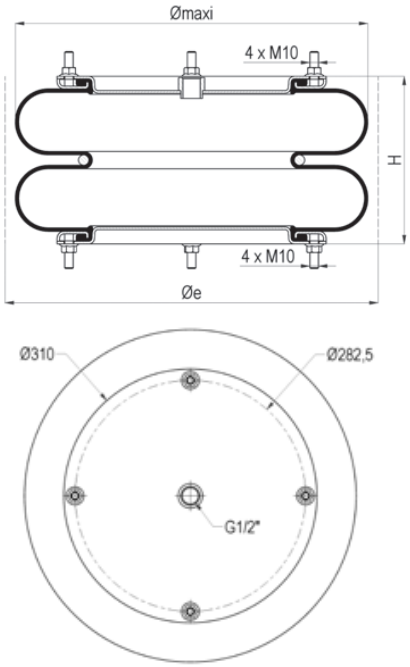

Adiabatic characteristic curves / Dynamic movements

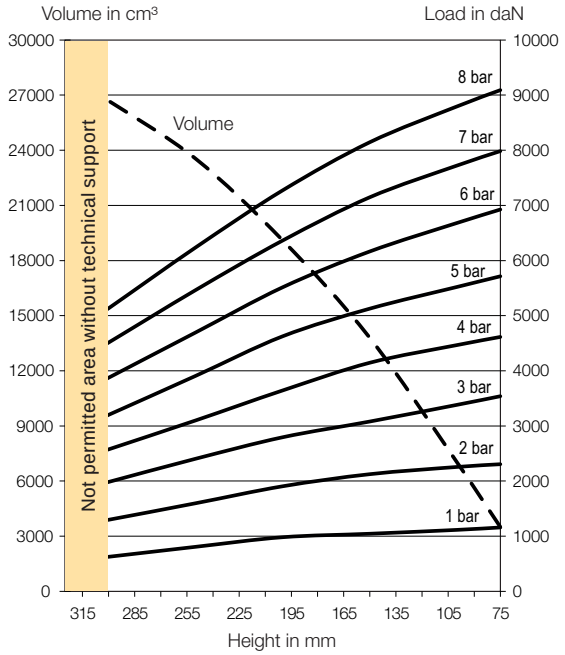

Order Code

Materials	Cups	Standard cups	Stainless steel cups
Standard temperature NR	Steel or stainless steel	**9 109 171**	**9 109 171N**
High temperature CR		**9 109 271**	**9 109 271N**
Extreme high temp. ECO		On request	On request

Technical data

Air port inlet	G1/2"
Rec / Max pressure [bar]	5,5 / 8
Force [N] @ 0 bar to H (mm)	120 (80)
Weight [kg]	9,70

Dimensions [mm]

Ø maxi.	440
Øe	460
H static	200
H min.	75
H max.	325
H recommended	300

Fastening torque [Nm]

G1/2"	25 Nm
M10	25 Nm
-	-

Dynamic characteristic values

Pressure p [bar]	2	4	6
Force (load) [kN]	1270	2575	3865
Stiffness [daN/cm]	126,0	228,0	323,0
Natural frequency [Hz]	1,6	1,5	1,4
Vol. V [cm³]	24250	24850	25460
H2 rec for isolation [mm]	290	290	290

Misalignment for H between [mm]

Axial	A = 5 mm	170 to 325
	A = 10 mm	180 to 315
Angular	Angle α = 5°	125 to 325
	Angle α = 10°	135 to 315
	Angle α = 15°	-

Static characteristic values

Pressure p [bar]		Force F [daN]						
		3	4	5	6	7	8	Vol. V [cm³]
Height H [mm]	**75**	3539	4614	5714	6925	7984	9090	3509
	100	3382	4466	5520	6680	7721	8793	7039
	150	3080	4146	5127	6164	7147	8145	13798
	200	2795	3644	4626	5515	6363	7273	19094
	250	2405	3100	3908	4695	5464	6237	23535
	300	1984	2575	3201	3874	4512	5133	26684
	325	1774	2311	2852	3465	4047	4596	28120

Tel: +45 63 12 83 00 | Email: ps@hymatik.com | www.hymatik.com | Hvidkaervej 27a, DK-5250 Odense SV, Denmark

Type x Number of Convolution: **16" x 3, Ø 410**

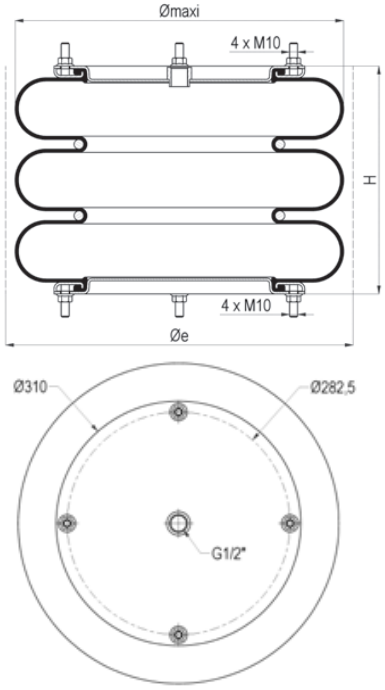

Adiabatic characteristic curves / Dynamic movements

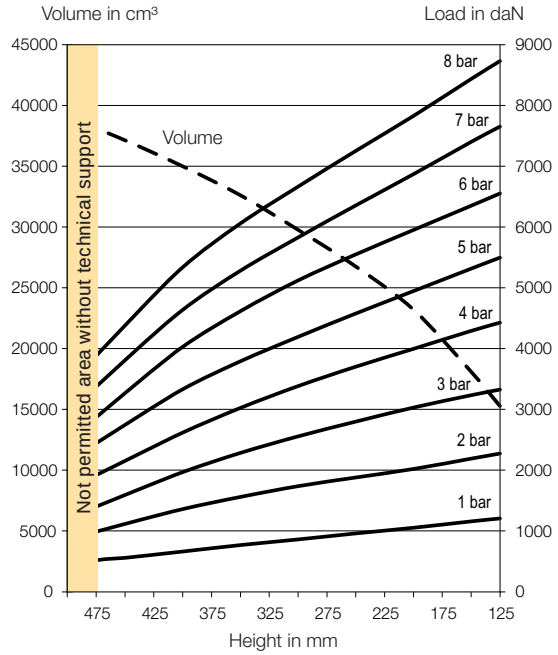

Order Code

Materials	Cups	Standard cups	Stainless steel cups
Standard temperature NR	Steel or stainless steel	**9 109 177**	**9 109 177N**
High temperature CR		**9 109 277**	**9 109 277N**
Extreme high temp. ECO		On request	On request

Technical data

Air port inlet	G1/2"
Rec / Max pressure [bar]	5,5 / 8
Force [N] @ 0 bar to H (mm)	200 (120)
Weight [kg]	12,50

Dimensions [mm]

Ø maxi.	440
Øe	460
H static	300
H min.	125
H max.	500
H recommended	475

Fastening torque [Nm]

G1/2"	25 Nm
M10	25 Nm
-	-



Dynamic characteristic values

Pressure p [bar]	2	4	6
Force (load) [kN]	1305	2615	3950
Stiffness [daN/cm]	96,0	168,0	244,0
Natural frequency [Hz]	1,4	1,3	1,2
Vol. V [cm³]	32800	33300	33800
H2 rec for isolation [mm]	400	400	400

Misalignment for H between [mm]

Axial	A = 5 mm	275 to 500
	A = 10 mm	290 to 485
Angular	Angle α = 5°	-
	Angle α = 10°	350 to 480
	Angle α = 15°	370 to 450

Static characteristic values

		Force F [daN]						
Pressure p [bar]		**3**	**4**	**5**	**6**	**7**	**8**	**Vol. V [cm³]**
Height H [mm]	**125**	3326	4427	5497	6552	7652	8730	15275
	200	3030	3996	4946	5951	6869	7827	23205
	250	2799	3702	4577	5549	6355	7252	26747
	300	2556	3383	4193	5121	5828	6664	29768
	350	2284	3024	3791	4615	5281	6058	32611
	400	1968	2618	3331	4029	4637	5337	34990
	450	1592	2153	2745	3267	3809	4380	37131
	500	1209	1667	2126	2469	2930	3365	39048

Tel: +45 63 12 83 00 | Email: ps@hymatik.com | www.hymatik.com | Hvidkaervej 27a, DK-5250 Odense SV, Denmark

Type x Number of Convolution: **21.1/2" x 2, Ø 550**

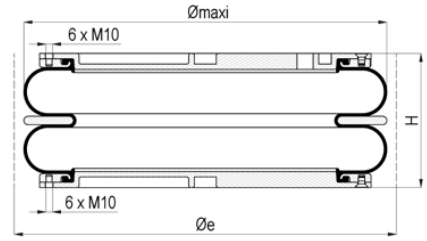

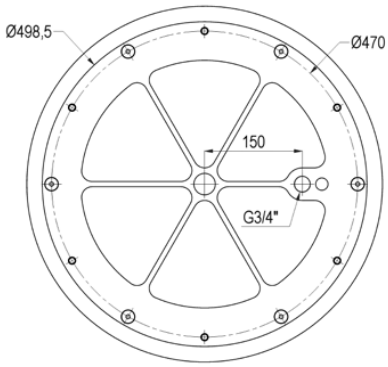

Adiabatic characteristic curves / Dynamic movements

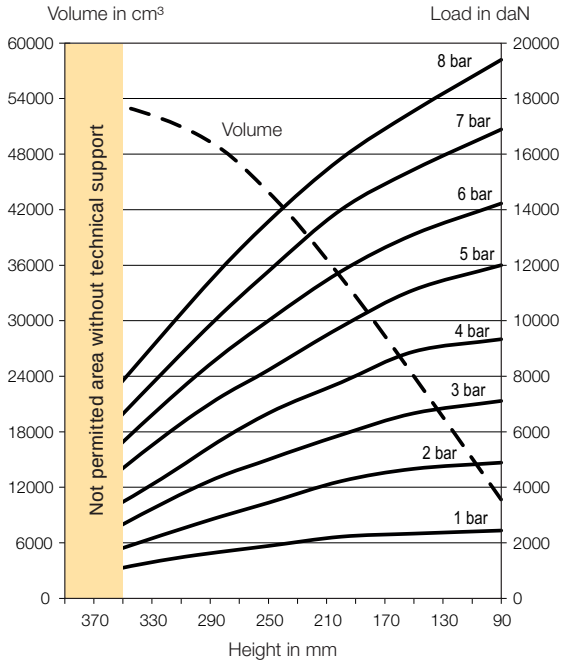

Order Code

Materials	Cups	Standard cups	Stainless steel cups
Standard temperature NR	Aluminium	**9 109 150**	-
High temperature CR		**9 109 250**	-
Extreme high temp. ECO		On request	-

Technical data

Air port inlet	G3/4"
Rec / Max pressure [bar]	5,5 / 8
Force [N] @ 0 bar to H (mm)	480 (90)
Weight [kg]	20,60

Dimensions [mm]

Ø maxi.	580
Øe	630
H static	200
H min.	90
H max.	390
H recommended	350

Fastening torque [Nm]

G3/4"	50 Nm
M10	25 Nm
-	-

Dynamic characteristic values

Pressure p [bar]	2	4	6
Force (load) [kN]	2625	5480	8335
Stiffness [daN/cm]	310,0	538,0	756,0
Natural frequency [Hz]	1,7	1,6	1,5
Vol. V [cm³]	47500	49100	50800
H2 rec for isolation [mm]	300	300	300

Misalignment for H between [mm]

Axial	A = 5 mm	None
	A = 10 mm	None
Angular	Angle α = 5°	None
	Angle α = 10°	None
	Angle α = 15°	None

Static characteristic values

Pressure p [bar]		Force F [daN]						
		3	4	5	6	7	8	Vol. V [cm³]
Height H [mm]	**90**	7111	9333	12000	14222	16889	19397	10667
	150	6667	8889	11111	13111	15444	17555	24000
	200	5889	7778	9778	11778	14000	15840	34667
	250	5000	6667	8222	10000	11778	13572	43900
	300	4000	5111	6667	8000	9333	10857	50222
	390	1556	2222	3111	3778	4444	5396	55111
	-	-	-	-	-	-	-	-

Tel: +45 63 12 83 00 | Email: ps@hymatik.com | www.hymatik.com | Hvidkaervej 27a, DK-5250 Odense SV, Denmark

Type x Number of Convolution: **26" x 2, Ø 660**

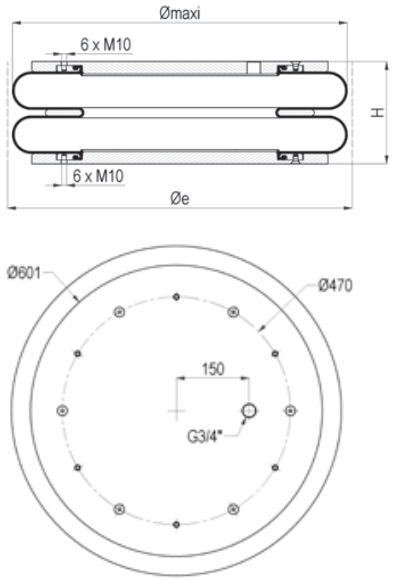

Adiabatic characteristic curves / Dynamic movements

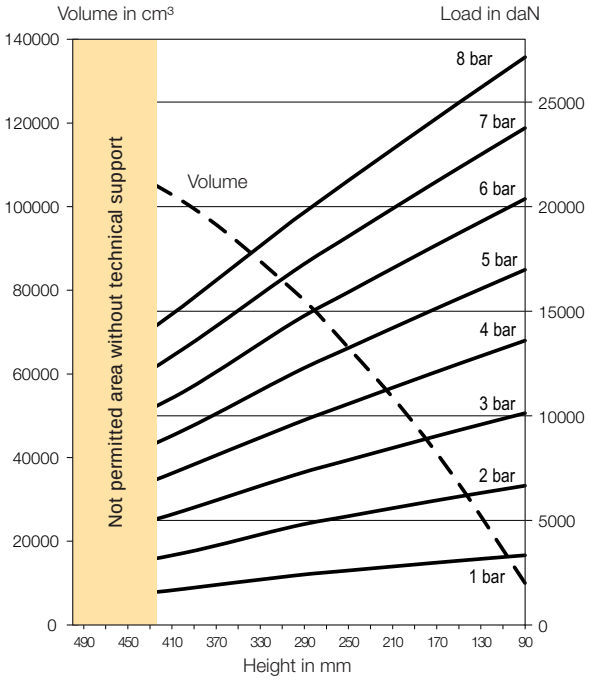

Order Code

Materials	Cups	Standard cups	Stainless steel cups
Standard temperature NR	Steel	**9 109 156**	-
High temperature CR		On request	-
Extreme high temp. ECO		On request	-

Technical data

Air port inlet	G3/4"
Rec / Max pressure [bar]	5,5 / 8
Force [N] @ 0 bar to H (mm)	150 (90)
Weight [kg]	23,70

Dimensions [mm]

Ø maxi.	700
Øe	750
H static	200
H min.	90
H max.	500
H recommended	425

Fastening torque [Nm]

G3/4"	50 Nm
M10	25 Nm
-	-

Dynamic characteristic values

Pressure p [bar]	2	4	6
Force (load) [kN]	4185	8590	13000
Stiffness [daN/cm]	316,0	560,0	792,0
Natural frequency [Hz]	1,4	1,3	1,2
Vol. V [cm³]	86200	88900	91500
H2 rec for isolation [mm]	350	350	350

Misalignment for H between [mm]

Axial	A = 5 mm	None
	A = 10 mm	None
Angular	Angle α = 5°	None
	Angle α = 10°	None
	Angle α = 15°	None

Static characteristic values

		Force F [daN]						
Pressure p [bar]		**3**	**4**	**5**	**6**	**7**	**8**	**Vol. V [cm³]**
Height H [mm]	**90**	10125	13595	16983	20370	23760	27150	10000
	150	9310	12485	15608	18730	21853	24975	33750
	200	8605	11535	14435	17335	20233	23130	51250
	250	7885	10570	13243	15915	18585	21255	66250
	300	7148	9590	12030	14470	16910	19350	80000
	400	5445	7460	9295	11130	13190	15250	101250
	500	3998	5475	6960	8445	9933	11420	114500

Tel: +45 63 12 83 00 | Email: ps@hymatik.com | www.hymatik.com | Hvidkaervej 27a, DK-5250 Odense SV, Denmark

Tel: +45 63 12 83 00 | Email: ps@hymatik.com | www.hymatik.com | Hvidkaervej 27a, DK-5250 Odense SV, Denmark

Bellows materials

Standard temperature, natural rubber NR made with NR (natural), SBR (styrolbutadiene), BR (butadiene) elastomers, Carbon Black and Chimical products.

Natural rubber is an ideal material for industrial applications in or out door.

- Excellent universal properties
- Very high dynamic capability
- Elasticity
- Tensile strength
- Tear resistance
- Abrasion resistance
- For removable and Crimped air bellows types

NR

Air Bellows temperature ranges

	Static		Dynamic													
	min (°C)	max (°C)	min (°C)	max (°C)	-50	-40	-35	-30	-25	-20	0	+70	+90	+100	+115	+120
Standard NR	-50	+90														
			-40	+70												

Air Bellows resistances

	NR
Abrasion	Yes
Anti freeze agents (ethylene glycol, glycerin)	Yes
Fuels	On request
Mineral or vegetable oils	On request
Silicone oil	Yes
Weak alkalis, soap solution	Yes
High concentration of ozone	On request
Inorganic acids < 10% and organic acids	Yes
Saline solutions, aqueous	Yes
Water	Yes

Bellows construction

Bellow rubber consists of:

An Outer & Inner covers rubbers

A first and second plies of reinforced rubber

An inside and outside cover rubber

These plies with cords are at a specific bias angle to one another.

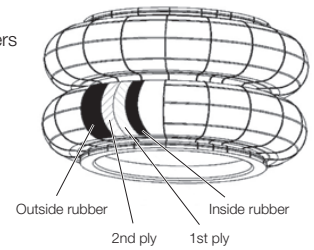

Tel: +45 63 12 83 00 | Email: ps@hymatik.com | www.hymatik.com | Hvidkaervej 27a, DK-5250 Odense SV, Denmark

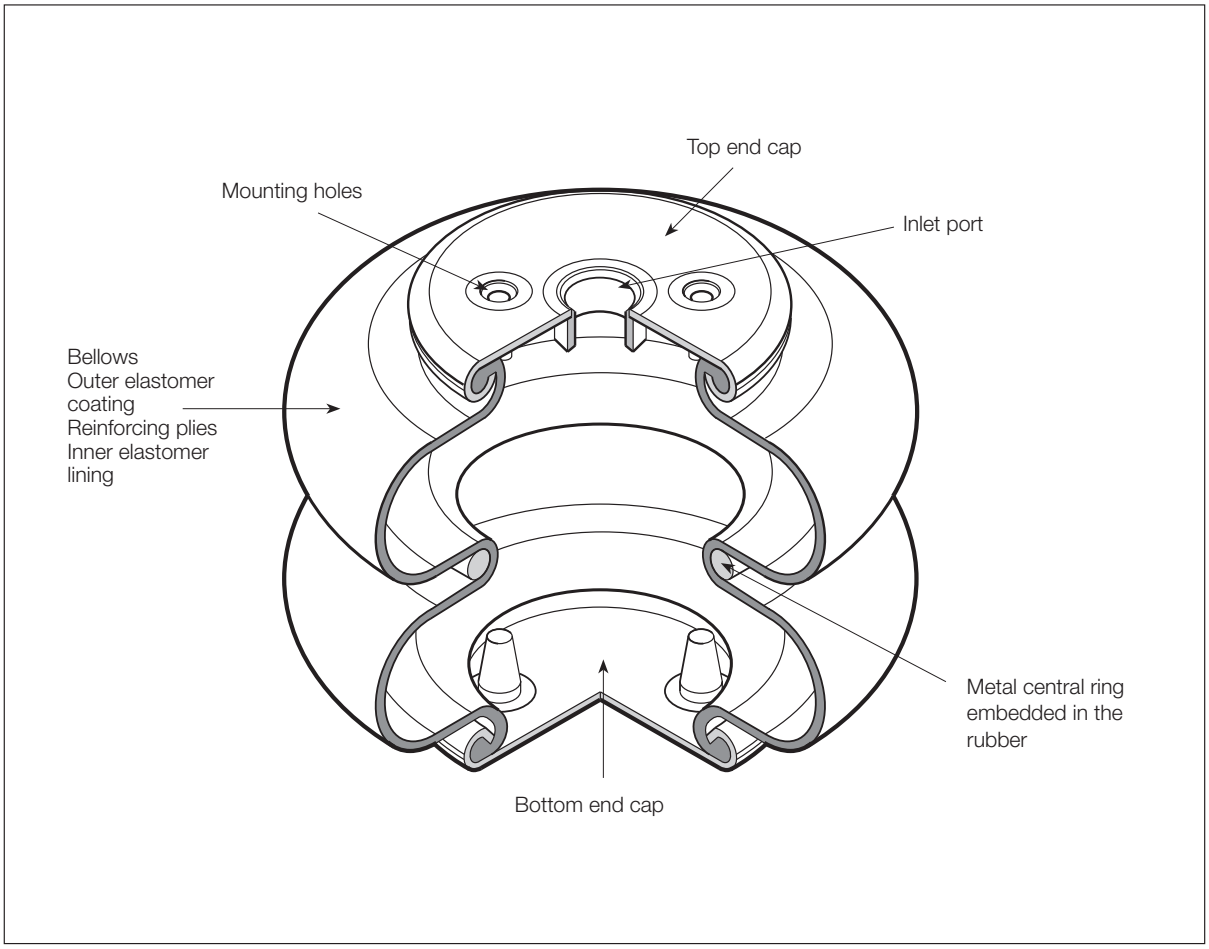

Crimped Convoluted Air Bellows

Air bellows are the ideal choice for applications requiring short stroke, high thrust single acting actuators.

Manufactured from fabric reinforced synthetic rubber in one or two convolutions according to stroke and model.
They incorporate no reciprocating metal parts and so provide virtually frictionless thrust compared with conventional pneumatic cylinders.

All models are single acting only. The return stroke is provided in part by the natural spring action of the bellows but more usually by the load itself.
The simplicity of construction provides an extremely long, virtually maintenance-free service life even under arduous conditions.

Air bellows are suitable for vibration applications i.e. device feeders at high frequency.

Versions

Air bellows are available with steel end plates.

Operation

Due to their flexible construction the mounting of Air Bellows is less critical than with conventional pneumatic cylinders, which normally require rigid fixing and guidance and provide only one axis within a limit of 30° between faces. Additionally the axial location of the end plates may be off set by up to 10 mm.

When pressurised Air Bellows will follow the line of leased resistance. Accordingly care must be taken with the mounting geometry in angled applications.

When depressurised Air Bellows will fit in to surprisingly small spaces, especially useful for clamping or moving awkwardly shaped or very heavy loads.

In operation it is recommended that the unit is not allowed to "bottom out" or achieve its maximum height. Various mechanical devices may be employed to achieve this.

Tel: +45 63 12 83 00 | Email: ps@hymatik.com | www.hymatik.com | Hvidkaervej 27a, DK-5250 Odense SV, Denmark

Technical specification, Crimped Air Bellows

- Single acting actuator
- One or two convolutions, three on request.

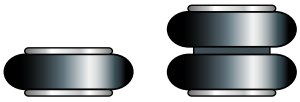

- The stroke is the difference between minimum and maximum heights. The force depends on the stroke.

Working pressure

- One air port on one end plate.
- Max static pressure 10 bar, working pressure 8 bar, 5.5 recommended for dynamic applications.
  Bursting pressure: 24 to 33 bar (depending on diameter, number of convolutions and type of elastomer).

Working medium, air quality

- Suitable for operation with compresses air or other gaseous media such as nitrogen.
- Also suitable for use with oil-free compressed air for the foodstuffs industry and in painting plants.
- Reliable even in low-pressure range with hydraulic media such as water or glycol.

Maintenance

- Free maintenance because no friction due to no part on movement. Non repairable, cups are crimped on the bellow.

Air Bellows material specification

			End caps, clamping ring, central ring			Bellows *		
Ø (mm)	**Nb convolution**	**Type**	**Standard**	**Option stainless steel**	**Option Other treatment**	**Natural**	**Option chlorobutyl**	**Option epichlor**
135	1 or 2	6 x 1 or 2	Steel DD13 zinc *	No	No	Compound NR-CBR	No	No
150	1 or 2	6.1/2 x 1 or 2						
155	2	7 x 2						
185	1	8 x 1						
220	1 or 2	10 x 1 or 2						
300	1 or 2	13 x 1 or 2						
350	1 or 2	16 x 1 or 2						

* Corrosion protection: Zinc alkaline / Passivation Chrome yellow 3 (Chrome free protection 6).

Resistance to salt spray > 480 hours rust red.

Conformity to ISO 1431-1 for ozone resistance.

Mountings on end plates

By internal threaded holes for

Ø 135 to 350 M8 12 Nm or M12 20 Nm

Clamping torques for screws

Ø 135 to 350 M8 12 Nm or M12 20 Nm



Recommendations

- It is not possible to combine angular misalignment with axial misalignment.
- It is imperative that external mechanical stops are used to limit the stroke.
- The units should not achieve maximum stroke or be allowed to "bottom out".
- Air Bellows may not be stacked, use singly only.
- The thrust of the Air Bellows depends on the height of the bellow.
- When height increases the thrust decreases because of the change in the effective area.
- DO NOT INFLATE the Air Bellow until it is not fixed on the machines with end stops. And so DEFLATE fully the Air Bellows before removing from the machine.
- Take care to put enough clearance around the Air Bellow because of the change in the section under pressure.
- Use the full surface of the end plates to bear the forces.
- Use guidance to avoid any angular or axial misalignments.

Tel: +45 63 12 83 00 | Email: ps@hymatik.com | www.hymatik.com | Hvidkaervej 27a, DK-5250 Odense SV, Denmark

Part numbers for ordering, crimped convoluted Air Bellows

								Order code			
								Standard cups		Stainless steel cups	
Ø (mm) (Inch size)	Type	Nb conv.	Air port size BSPP	Weight (kg)	Max stroke (mm)	Cups material	Max force (N) at 7 bar	Standard bellows	High temp bellows	Standard bellows	High temp bellows
135 (6")	6 x 1	1	G1/4	0,85	55	Steel	6850	**KY9500**	/	/	/
	6 x 2	2		1,00	110		7250	**KY9612**	/	/	/
150 (6.1/2")	6.1/2 x 1	1	G1/4	1,30	45	Steel	9140	**KY8401**	/	/	/
	6.1/2 x 2	2		1,50	80		9300	**KY8011**	/	/	/
155 (7")	7 x 1	1	G1/4	/	/	Steel	/	/	/	/	/
	7 x 2	2		1,60	105		9750	**KY8012**	/	/	/
185 (8")	8 x 1	1	G1/4	1,70	90	Steel	14270	**KY9501**	/	/	/
	8 x 2	2		2,00	125		14520	**KY9589**	/	/	/
220 (10")	10 x 1	1	G3/4	2,20	100	Steel	20780	**KY9502**	/	/	/
	10 x 2	2		2,70	150		21350	**KY9611**	/	/	/
300 (13")	13 x 1	1	G3/4	3,90	110	Steel	38770	**KY9590**	/	/	/
	13 x 2	2		4,60	170		38440	**KY9591**	/	/	/
350 (16")	16 x 1	1	G3/4	5,40	110	Steel	57220	**KY8010**	/	/	/
	16 x 2	2		6,20	170		59130	**KY8007**	/	/	/

Air Bellows permissible misalignments when Air Bellows are used as actuators

H rec. = recommended installation height |ØN min = minimum space diameter need for installing the Air Bellows

It is not possible to combine angular misalignment with axial misalignment.				**Angular**				**Axial**		
The following values are for short time movement during stroke. The Air Bellows may not be exposed to axial misalignment permanently.				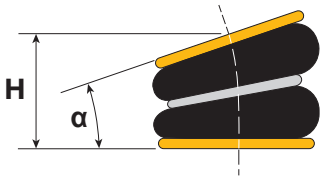				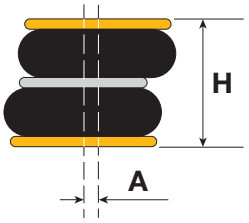		
Ø (mm) (Inch size)	**Order code**	**Type**	**Nb conv.**	**H rec. (mm)**	**Angle α = 5° for H (mm) between min to max**	**Angle α = 10° for H (mm) between min to max**	**Angle α = 15° for H (mm) between min to max**	**ØN min (mm)**	**A = 5 mm for H (mm) between min to max**	**A = 10 mm for H (mm) between min to max**
Ø 135 (6")	**KY9500**	6" x 1	1	95	55 to 95	60 to 90	Not adapted to	180	65 to 95	75 to 85
	KY9612	6" x 2	2	175	90 to 175	95 to 170	100 to 165	180	100 to 175	110 to 165
Ø 150 (6.1/2)	**KY8401**	6.1/2" x 1	1	85	60 to 85	65 to 80	Not adapted to	190	60 to 90	65 to 85
	KY8011	6.1/2" x 2	2	145	90 to 145	95 to 140	100 to 135	190	90 to 150	95 to 145
Ø 155 (7")	**KY8012**	7" x 2	2	170	90 to 170	95 to 165	100 to 160	205	90 to 175	95 to 165
Ø 185 (8")	**KY9501**	8" x 1	1	115	60 to 115	65 to 110	70 to 105	230	70 to 120	80 to 115
	KY9589	8" x 2	2	200	105 to 200	115 to 195	120 to 190	230	100 to 205	105 to 195
Ø 220 (10")	**KY9502**	10" x 1	1	135	60 to 135	70 to 125	75 to 120	270	65 to 145	70 to 135
	KY9611	10" x 2	2	215	105 to 220	110 to 210	120 to 205	270	105 to 225	115 to 215
Ø 300 (13")	**KY9590**	13" x 1	1	150	75 to 150	85 to 140	95 to 130	340	70 to 135	80 to 130
	KY9591	13" x 2	2	230	105 to 235	115 to 225	125 to 215	340	110 to 240	115 to 230
Ø 350 (16")	**KY8010**	16" x 1	1	150	80 to 145	90 to 135	100 to 125	400	75 to 140	85 to 135
	KY8007	16" x 2	2	230	110 to 235	120 to 220	135 to 210	400	115 to 235	120 to 230

Tel: +45 63 12 83 00 | Email: ps@hymatik.com | www.hymatik.com | Hvidkaervej 27a, DK-5250 Odense SV, Denmark

Vibration isolation (damping) when Air Bellows are used as isolators

The stiffness is the reaction force that appears when Air Bellow deflects from its initail position.

Due to the compression of air the stiffness is not constant an it is a function of effective area variation, volume and pressure variations.

H2 rec. = recommended installation height for best isolation.

Isolation rate I (%) fe=exciting frequency (Hz) fn=natural frequency (Hz) $I = 1 - \frac{1}{\left(\frac{fe}{fn}\right)^2 - 1}$							At 2 bar		At 4 bar		At 6 bar		At 0 bar
Ø (mm) (Inch size)	**Order code**	**Type**	**Nb conv.**	**Max stroke (mm)**	**Static height (mm)**	**H2 rec. (mm)**	**Natural Frequency fn (Hz)**	**Stiffness (daN/cm)**	**Natural Frequency fn (Hz)**	**Stiffness (daN/cm)**	**Natural Frequency fn (Hz)**	**Stiffness (daN/cm)**	**Load (N) to obtain H min**
Ø 135 (6")	**KY9500**	6 x 1	1	55	80	75	3,14	7	3,1	11,56	3,07	18,02	15
	KY9612	6 x 2	2	110	135	135	2,39	4,17	2,34	6,63	2,3	10,22	25
Ø 150 (6.1/2")	**KY8401**	6.1/2 x 1	1	45	75	70	4,12	13,38	4,1	26,84	4,04	41,5	110
	KY8011	6.1/2 x 2	2	80	120	120	2,72	5,98	2,66	12,27	2,64	18	80
Ø 155 (7")	**KY8012**	7 x 2	2	105	125	130	2,53	5,8	2,47	11,06	2,43	16,41	100
Ø 185 (8")	**KY9501**	8 x 1	1	80	90	90	2,87	9,74	2,81	18,83	2,78	28,95	50
	KY9589	8 x 2	2	125	160	160	2,14	5,42	2,07	10,14	2,03	15,11	30
Ø 220 (10")	**KY9502**	10 x 1	1	100	100	100	2,42	11,54	2,37	22,81	2,33	34,25	50
	KY9611	10 x 2	2	150	165	165	1,89	7,04	1,83	14,39	1,8	20,69	60
Ø 300 (13")	**KY9590**	13 x 1	1	110	115	115	2,13	17,89	2,09	34,44	2,05	51,36	150
	KY9591	13 x 2	2	170	175	175	1,75	11,23	1,71	21,33	1,67	29,69	100
Ø 350 (16")	**KY8010**	16 x 1	1	110	115	115	2,11	28,08	2,07	54,06	2,04	77,11	80
	KY8007	16 x 2	2	170	175	175	1,88	20,2	1,85	39,13	1,83	58,09	100

Tel: +45 63 12 83 00 | Email: ps@hymatik.com | www.hymatik.com | Hvidkaervej 27a, DK-5250 Odense SV, Denmark

Air Bellows mounting dimensions (mm), crimped type

H min, H max = recommended installation heights
H rec. = height recommended when air bellows is used as an actuator
H2 rec. = height recommended when air bellows is used as an isolator
F = thread depth for fixing
ØN min = minimum space diameter need for installing the air bellows

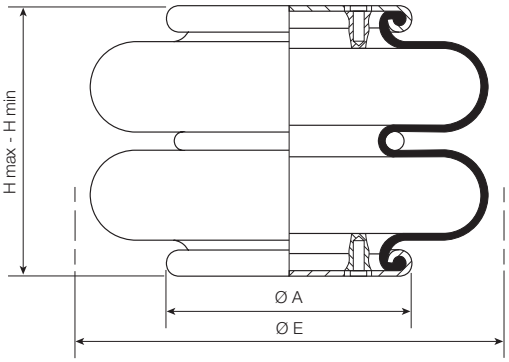

It is imperative that external machanical end stops are used to limit the stroke. The air bellow should not achieve maximum or minimum heights or be allowed to "bottom out". Air bellows may not be stacked, use singly only.

Air Bellows description				Material	Weight	Height						Diameters			
Ø (mm) (Inch size)	Order code	Type	Nb conv.	Cup material	Kg	Max stroke mm	H min mm	H static mm	H max mm	H rec. mm	H2 rec. mm	ØA mm	ØE static mm	ØE max mm	ØN min mm
Ø135 (6")	**KY9500**	6" x 1	1	Steel	0,85	55	50	80	105	95	75	91	135	145	180
	KY9612	6" x 2	2	Steel	1,00	110	80	135	190	175	135	91	135	150	180
Ø150 (6.1/2")	**KY8401**	6.1/2" x 1	1	Steel	1,30	45	50	75	95	85	70	112	150	165	190
	KY8011	6.1/2" x 2	2	Steel	1,50	80	80	120	160	145	120	112	150	165	190
Ø155 (7")	**/**	7" x 1	1	Steel	/	/	/	/	/	/	/	/	/	/	/
	KY8012	7" x 2	2	Steel	1,60	105	80	125	185	170	130	112	155	160	205
Ø185 (8")	**KY9501**	8" x 1	1	Steel	1,70	80	50	90	130	115	90	136	185	200	230
	KY9589	8" x 2	2	Steel	2,00	125	95	160	220	200	160	136	185	200	230
Ø220 (10")	**KY9502**	10" x 1	1	Steel	2,20	100	50	100	150	135	100	160	220	240	270
	KY9611	10" x 2	2	Steel	2,70	150	90	165	240	215	165	160	220	240	270
Ø300 (13")	**KY9590**	13" x 1	1	Steel	3,90	110	60	115	170	150	115	228	300	325	340
	KY9591	13" x 2	2	Steel	4,60	170	90	175	260	230	175	228	300	330	340
Ø350 (16")	**KY8010**	16" x 1	1	Steel	5,40	110	60	115	170	150	115	288	350	370	400
	KY8007	16" x 2	2	Steel	6,20	170	90	175	260	230	175	288	350	370	400

Air Bellows description			Mounting *					Pressure			
Ø (mm) (Inch size)	Order code	Type	J mm	H mm	K mm	L mm	G mm	Air port	Max static bar	Max dyn. bar	Rec. dyn. bar
Ø135 (6")	**KY9500**	6" x 1	9,0	22,0	11,0	-	M8 depth 15	G1/4	10	8	5,5
	KY9612	6" x 2									
Ø150 (6.1/2")	**KY8401**	6.1/2" x 1	-	44,5	-	-	M8 depth 15	G1/4	10	8	5,5
	KY8011	6.1/2" x 2									
Ø155 (7")	**/**	7" x 1	/	/	/	/	/	/	/	/	/
	KY8012	7" x 2	-	44,5	-	-	M8 depth 15	G1/4	10	8	5,5
Ø185 (8")	**KY9501**	8" x 1	-	54,0	-	27,0	M8 depth 15	G1/4	10	8	5,5
	KY9589	8" x 2									
Ø220 (10")	**KY9502**	10" x 1	-	89,0	-	38,0	M8 depth 15	G3/4	10	8	5,5
	KY9611	10" x 2									
Ø300 (13")	**KY9590**	13" x 1	-	157,5	-	73,0	M12 depth 22	G3/4	10	8	5,5
	KY9591	13" x 2									
Ø350 (16")	**KY8010**	16" x 1	-	158,8	-	-	M8 depth 15	G3/4	10	8	5,5
	KY8007	16" x 2									

* For endplate mounting and air port dimensions see following pages.

Note: Depending on the production some non functional dimensions could differ, for more detail please consult the factory.

Tel: +45 63 12 83 00 | Email: ps@hymatik.com | www.hymatik.com | Hvidkaervej 27a, DK-5250 Odense SV, Denmark

Type x Number of Convolution: **6" x 1, Ø 135**

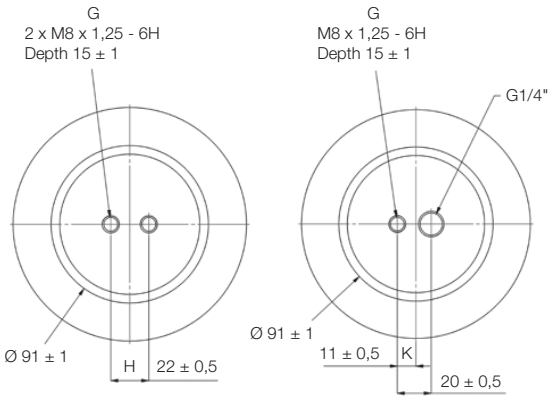

Adiabatic characteristic curves / Dynamic movements

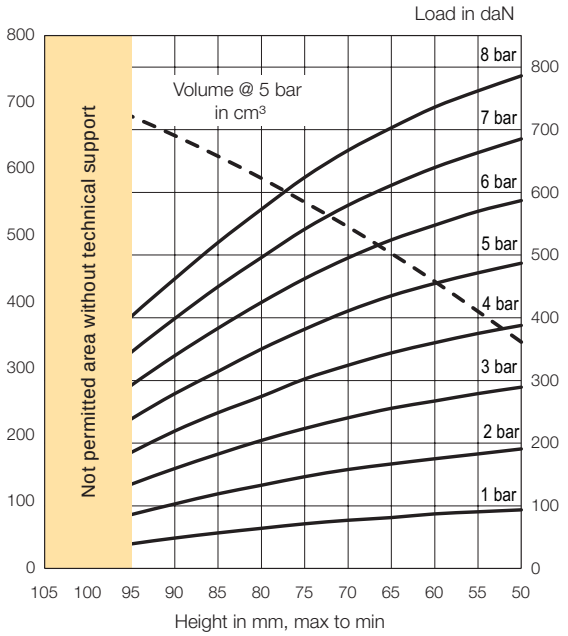

Order Code

Materials	Cups	Standard cups	Stainless steel cups
Standard temperature	Steel	**KY9500**	-
High temperature CR		-	-
Extreme high temp. ECO		-	-

Technical data

Air port inlet	G1/4
Rec / Max pressure [bar]	5,5 / 8
Force to Hmin @ 0 bar [N]	15
Weight [kg]	0,85

Dimensions [mm]

Ø maxi.	145
Øe	180
H static	80
H min.	50
H max.	105
H recommended	95

Fastening torque [Nm]

G1/4	15
M8	12



Dynamic characteristic values

Pressure p [bar]	2	4	6
Stiffness [daN/cm]	7,0	11,6	18,0
Natural frequency [Hz]	3,14	3,10	3,07
H2 rec for isolation [mm]		75	

Misalignment for H between [mm]

Axial	A = 5 mm	65 to 95
	A = 10 mm	75 to 85
Angular	Angle α = 5°	55 to 95
	Angle α = 10°	60 to 90
	Angle α = 15°	-

Static characteristic values

Pressure p [bar]		Force F [daN]						
		3	4	5	6	7	8	Vol. V [cm³]
Height H [mm]	**50**	289	388	487	587	685	786	340
	60	267	360	455	548	640	736	431
	70	240	324	411	495	579	667	513
	80	204	274	350	424	496	573	586
	90	159	219	279	339	399	462	650
	100	108	151	194	241	286	335	706
	105	77	111	148	184	222	263	730

Tel: +45 63 12 83 00 | Email: ps@hymatik.com | www.hymatik.com | Hvidkaervej 27a, DK-5250 Odense SV, Denmark

Type x Number of Convolution: **6.1/2" x 1, Ø 150**

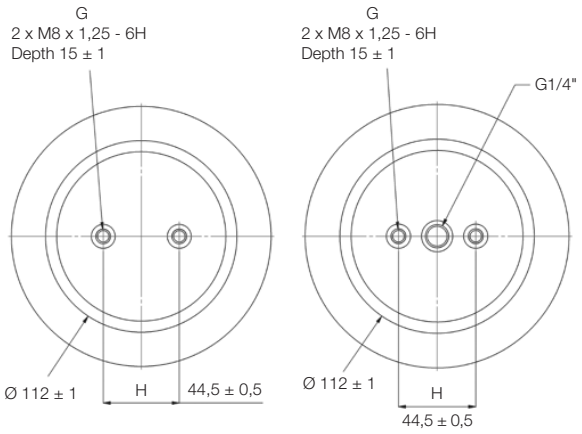

Adiabatic characteristic curves / Dynamic movements

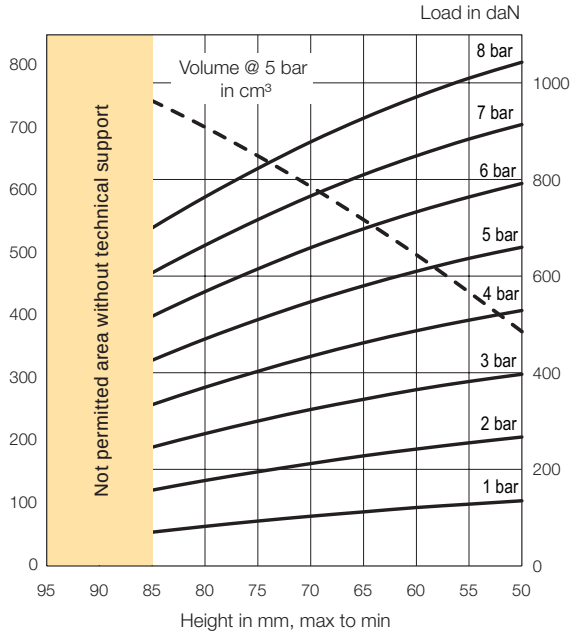

Order Code

Materials	Cups	Standard cups	Stainless steel cups
Standard temperature	Steel	**KY8401**	-
High temperature CR		-	-
Extreme high temp. ECO		-	-

Technical data

Air port inlet	G1/4"
Rec / Max pressure [bar]	5,5 / 8
Force to Hmin @ 0 bar [N]	110
Weight [kg]	1,30

Dimensions [mm]

Ø maxi.	160
Øe	190
H static	75
H min.	50
H max.	95
H recommended	85

Fastening torque [Nm]

G1/4"	15
M8	12

Dynamic characteristic values

Pressure p [bar]	2	4	6
Stiffness [daN/cm]	13,4	26,8	41,5
Natural frequency [Hz]	4,1	4,1	4,0
H2 rec for isolation [mm]		70	

Misalignment for H between [mm]

Axial	A = 5 mm	60 to 90
	A = 10 mm	65 to 85
Angular	Angle α = 5°	60 to 85
	Angle α = 10°	65 to 80
	Angle α = 15°	-

Static characteristic values

Pressure p [bar]		Force F [daN]						
		3	4	5	6	7	8	Vol. V [cm³]
Height H [mm]	**50**	397	529	660	792	914	1043	375
	60	365	487	610	733	849	971	498
	70	324	434	547	659	766	878	607
	80	274	370	470	568	664	764	702
	85	246	334	426	517	607	700	744
	90	215	296	379	462	544	630	782
	95	183	255	328	403	478	555	818

Parker Hannifin Corporation
Pneumatic Division - Europe

Tel: +45 63 12 83 00 | Email: ps@hymatik.com | www.hymatik.com | Hvidkaervej 27a, DK-5250 Odense SV, Denmark

Type x Number of Convolution: **8" x 1, Ø 185**

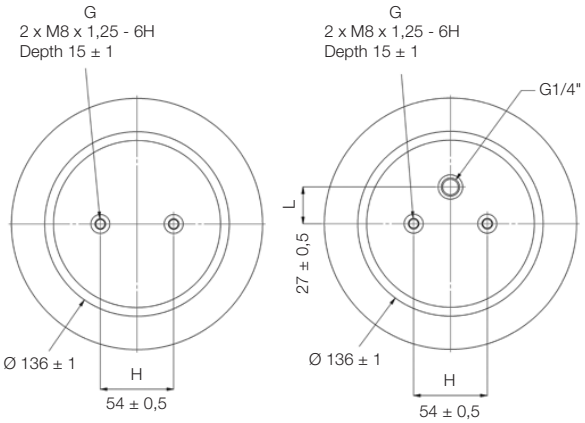

Adiabatic characteristic curves / Dynamic movements

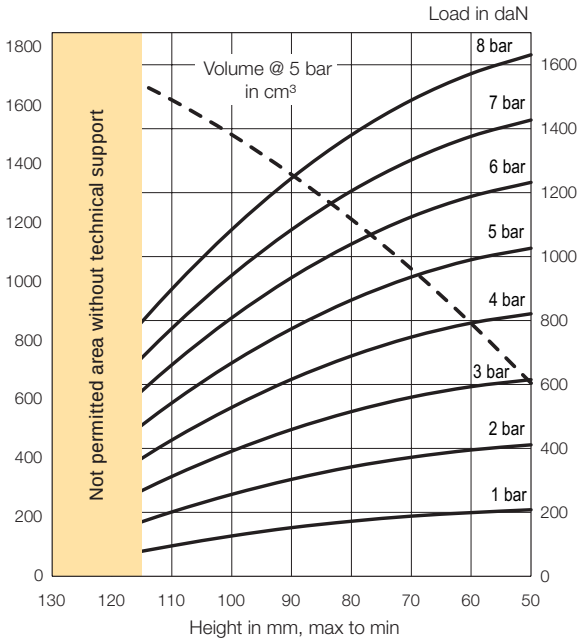

Order Code

Materials	Cups	Standard cups	Stainless steel cups
Standard temperature	Steel	**KY9501**	-
High temperature CR		-	-
Extreme high temp. ECO		-	-

Technical data

Air port inlet	G1/4"
Rec / Max pressure [bar]	5,5 / 8
Force to Hmin @ 0 bar [N]	50
Weight [kg]	1,70

Dimensions [mm]

Ø maxi.	200
Øe	230
H static	90
H min.	50
H max.	130
H recommended	115

Fastening torque [Nm]

G1/4"	15
M8	12

Dynamic characteristic values

Pressure p [bar]	2	4	6
Stiffness [daN/cm]	9,7	18,8	29,0
Natural frequency [Hz]	2,9	2,8	2,8
H2 rec for isolation [mm]		90	

Misalignment for H between [mm]

Axial	A = 5 mm	70 to 120
	A = 10 mm	80 to 115
Angular	Angle α = 5°	60 to 115
	Angle α = 10°	65 to 110
	Angle α = 15°	70 to 105

Static characteristic values

Pressure p [bar]		Force F [daN]						
		3	4	5	6	7	8	Vol. V [cm³]
Height H [mm]	**50**	615	821	1026	1232	1427	1631	657
	70	560	748	936	1124	1302	1489	1046
	90	459	616	774	934	1084	1245	1367
	110	312	426	542	661	775	898	1621
	130	118	176	239	305	373	449	1808
	-	-	-	-	-	-	-	-
	-	-	-	-	-	-	-	-

Parker Hannifin Corporation
Pneumatic Division - Europe

Tel: +45 63 12 83 00 | Email: ps@hymatik.com | www.hymatik.com | Hvidkaervej 27a, DK-5250 Odense SV, Denmark

Type x Number of Convolution: **10" x 1, Ø 220**

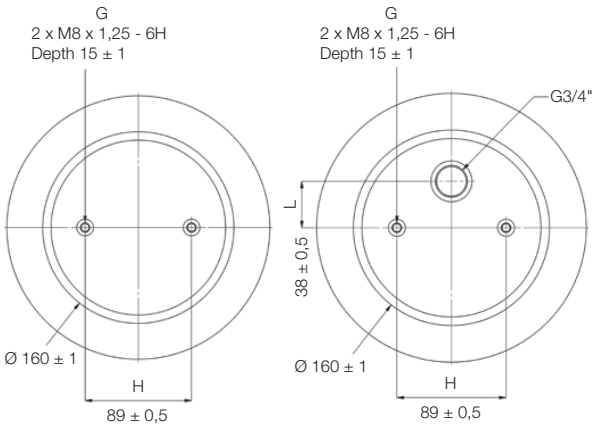

Adiabatic characteristic curves / Dynamic movements

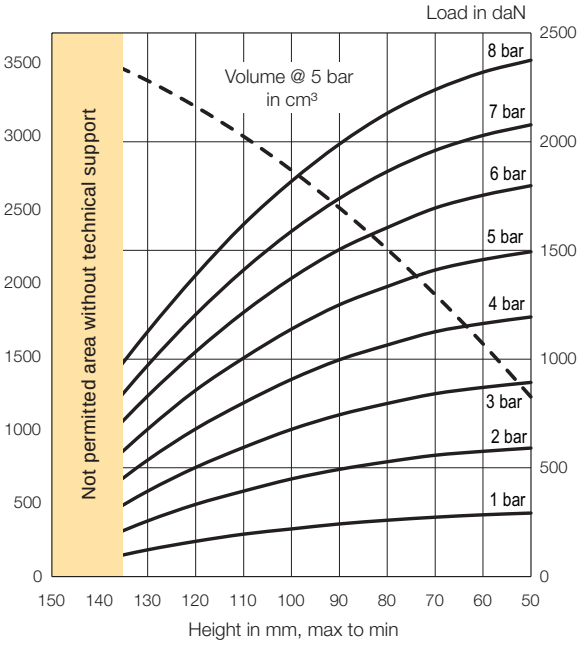

Order Code

Materials	Cups	Standard cups	Stainless steel cups
Standard temperature	Steel	**KY9502**	-
High temperature CR		-	-
Extreme high temp. ECO		-	-

Technical data

Air port inlet	G3/4"
Rec / Max pressure [bar]	5,5 / 8
Force to Hmin @ 0 bar [N]	50
Weight [kg]	2,20

Dimensions [mm]

Ø maxi.	240
Øe	270
H static	100
H min.	50
H max.	150
H recommended	135

Fastening torque [Nm]

G3/4"	50
M8	12



Dynamic characteristic values

Pressure p [bar]	2	4	6
Stiffness [daN/cm]	11,5	22,8	34,3
Natural frequency [Hz]	2,4	2,4	2,3
H2 rec for isolation [mm]		100	

Misalignment for H between [mm]

Axial	A = 5 mm	65 to 145
	A = 10 mm	70 to 135
Angular	Angle α = 5°	60 to 135
	Angle α = 10°	70 to 125
	Angle α = 15°	75 to 120

Static characteristic values

Pressure p [bar]		Force F [daN]						
		3	4	5	6	7	8	Vol. V [cm³]
Height H [mm]	**50**	893	1194	1494	1798	2078	2375	1224
	70	841	1126	1410	1695	1960	2239	1920
	90	744	997	1250	1504	1739	1989	2511
	110	594	799	1005	1215	1410	1620	2997
	130	393	536	678	831	972	1127	3376
	150	114	179	254	331	414	510	3650
	-	-	-	-	-	-	-	-

Tel: +45 63 12 83 00 | Email: ps@hymatik.com | www.hymatik.com | Hvidkaervej 27a, DK-5250 Odense SV, Denmark

Type x Number of Convolution: **13" x 1, Ø 300**

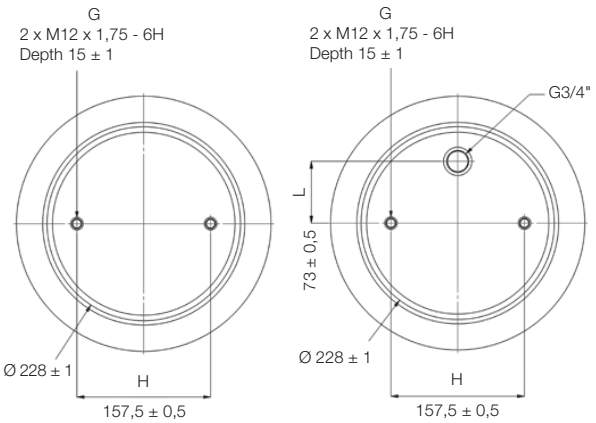

Adiabatic characteristic curves / Dynamic movements

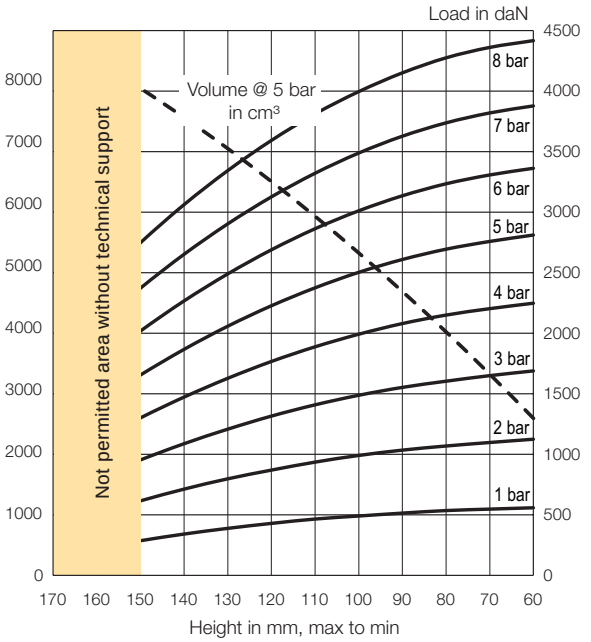

Order Code

Materials	Cups	Standard cups	Stainless steel cups
Standard temperature	Steel	**KY9590**	-
High temperature CR		-	-
Extreme high temp. ECO		-	-

Technical data

Air port inlet	G3/4"
Rec / Max pressure [bar]	5,5 / 8
Force to Hmin @ 0 bar [N]	150
Weight [kg]	3,90

Dimensions [mm]

Ø maxi.	325
Øe	340
H static	115
H min.	60
H max.	170
H recommended	150

Fastening torque [Nm]

G3/4"	50
M12	20

Dynamic characteristic values

Pressure p [bar]	2	4	6
Stiffness [daN/cm]	17,9	34,4	51,4
Natural frequency [Hz]	2,1	2,1	2,1
H2 rec for isolation [mm]		115	

Misalignment for H between [mm]

Axial	A = 5 mm	70 to 135
	A = 10 mm	80 to 130
Angular	Angle α = 5°	75 to 150
	Angle α = 10°	85 to 140
	Angle α = 15°	95 to 130

Static characteristic values

Pressure p [bar]		Force F [daN]						
		3	4	5	6	7	8	Vol. V [cm³]
Height H [mm]	**60**	1689	2248	2811	3362	3877	4416	2538
	80	1604	2150	2694	3234	3737	4274	3933
	100	1488	1992	2503	3011	3488	3995	5207
	120	1316	1767	2227	2689	3126	3592	6361
	140	1088	1473	1867	2267	2652	3062	7394
	160	807	1111	1423	1745	2064	2400	8308
	170	639	895	1164	1444	1728	2027	8719

Tel: +45 63 12 83 00 | Email: ps@hymatik.com | www.hymatik.com | Hvidkaervej 27a, DK-5250 Odense SV, Denmark

Type x Number of Convolution: **16" x 1, Ø 350**

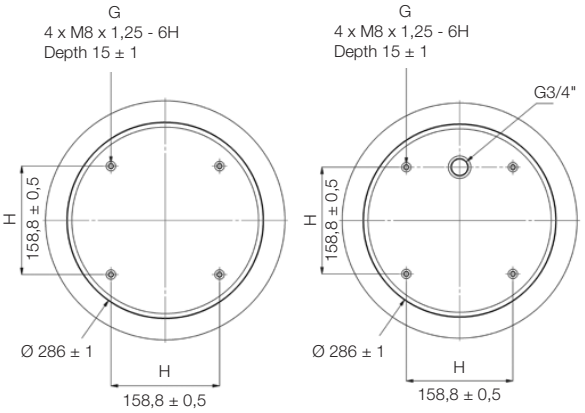

Adiabatic characteristic curves / Dynamic movements

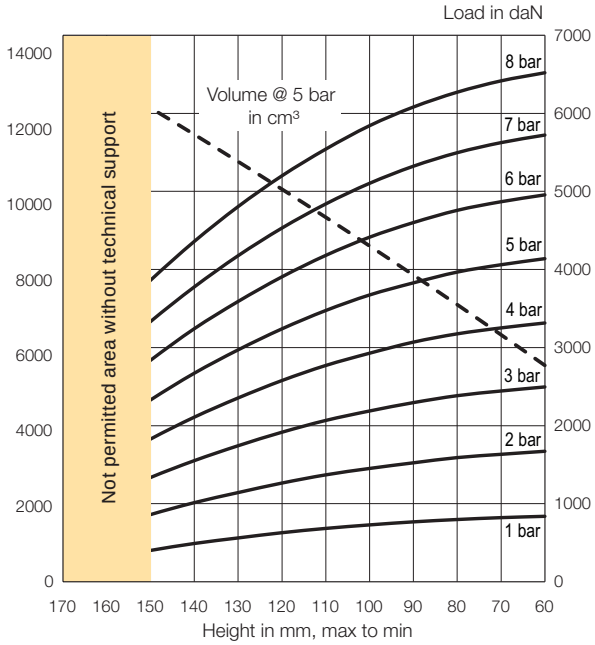

Order Code

Materials	Cups	Standard cups	Stainless steel cups
Standard temperature	Steel	**KY8010**	-
High temperature CR		-	-
Extreme high temp. ECO		-	-

Technical data

Air port inlet	G3/4"
Rec / Max pressure [bar]	5,5 / 8
Force to Hmin @ 0 bar [N]	80
Weight [kg]	5,40

Dimensions [mm]

Ø maxi.	370
Øe	400
H static	115
H min.	60
H max.	170
H recommended	150

Fastening torque [Nm]

G3/4"	50
M8	12



Dynamic characteristic values

Pressure p [bar]	2	4	6
Stiffness [daN/cm]	28,1	54,1	77,1
Natural frequency [Hz]	2,1	2,1	2,0
H2 rec for isolation [mm]		115	

Misalignment for H between [mm]

Axial	A = 5 mm	75 to 140
	A = 10 mm	85 to 135
Angular	Angle α = 5°	80 to 145
	Angle α = 10°	90 to 135
	Angle α = 15°	100 to 125

Static characteristic values

Pressure p [bar]		Force F [daN]						
		3	4	5	6	7	8	Vol. V [cm³]
Height H [mm]	**60**	2496	3315	4139	4956	5722	6520	5743
	80	2384	3176	3967	4758	5496	6271	7354
	100	2188	2928	3674	4414	5104	5842	8911
	120	1916	2578	3240	3906	4531	5200	10415
	140	1552	2109	2672	3242	3777	4360	11866
	160	1087	1512	1950	2399	2843	3322	13264
	170	808	1148	1511	1901	2302	2729	13943

Tel: +45 63 12 83 00 | Email: ps@hymatik.com | www.hymatik.com | Hvidkaervej 27a, DK-5250 Odense SV, Denmark

Type x Number of Convolution: **6" x 2, Ø 135**

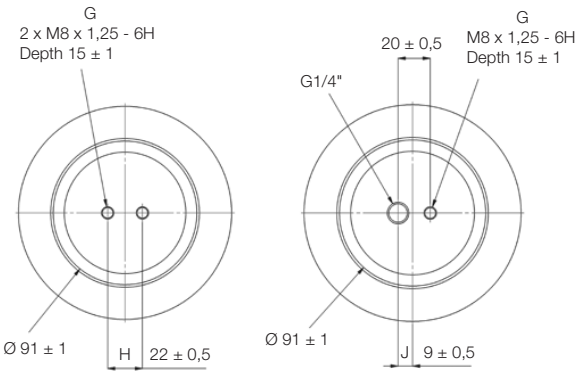

Adiabatic characteristic curves / Dynamic movements

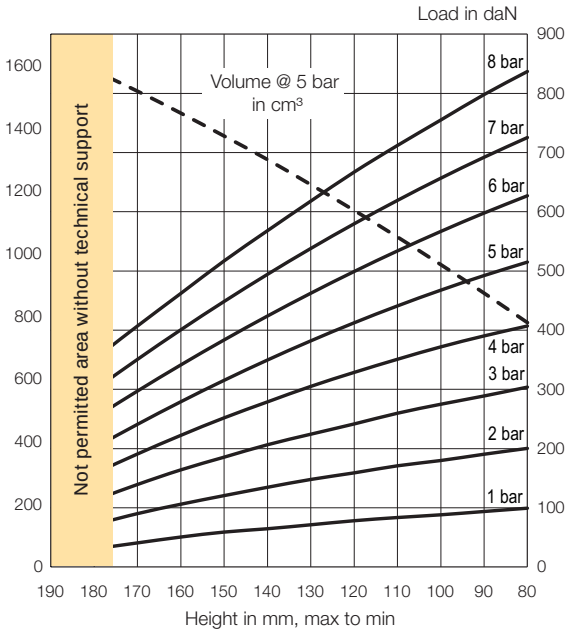

Order Code

Materials	Cups	Standard cups	Stainless steel cups
Standard temperature	Steel	**KY9612**	-
High temperature CR		-	-
Extreme high temp. ECO		-	-

Technical data

Air port inlet	G1/4"
Rec / Max pressure [bar]	5,5 / 8
Force to Hmin @ 0 bar [N]	25
Weight [kg]	1,00

Dimensions [mm]

Ø maxi.	150
Øe	180
H static	135
H min.	80
H max.	190
H recommended	175

Fastening torque [Nm]

G1/4"	15
M8	12

Dynamic characteristic values

Pressure p [bar]	2	4	6
Stiffness [daN/cm]	4,2	6,6	10,2
Natural frequency [Hz]	2,39	2,34	2,30
H2 rec for isolation [mm]		135	

Misalignment for H between [mm]

Axial	A = 5 mm	100 to 175
	A = 10 mm	110 to 165
Angular	Angle α = 5°	90 to 175
	Angle α = 10°	95 to 170
	Angle α = 15°	100 to 165

Static characteristic values

Pressure p [bar]		Force F [daN]						
		3	4	5	6	7	8	Vol. V [cm³]
Height H [mm]	**80**	304	407	515	627	725	837	780
	100	275	372	468	567	657	755	965
	120	242	329	412	499	580	667	1138
	140	206	279	350	424	494	568	1300
	160	164	222	279	341	401	462	1448
	180	112	157	201	251	299	350	1584
	190	83	122	159	203	244	292	1650

Tel: +45 63 12 83 00 | Email: ps@hymatik.com | www.hymatik.com | Hvidkaervej 27a, DK-5250 Odense SV, Denmark

Type x Number of Convolution: **6.1/2" x 2, Ø 150**

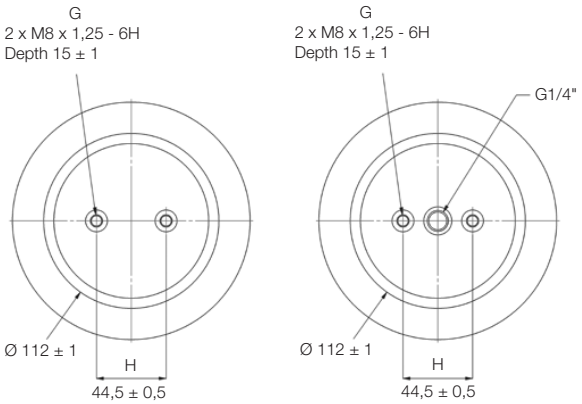

Adiabatic characteristic curves / Dynamic movements

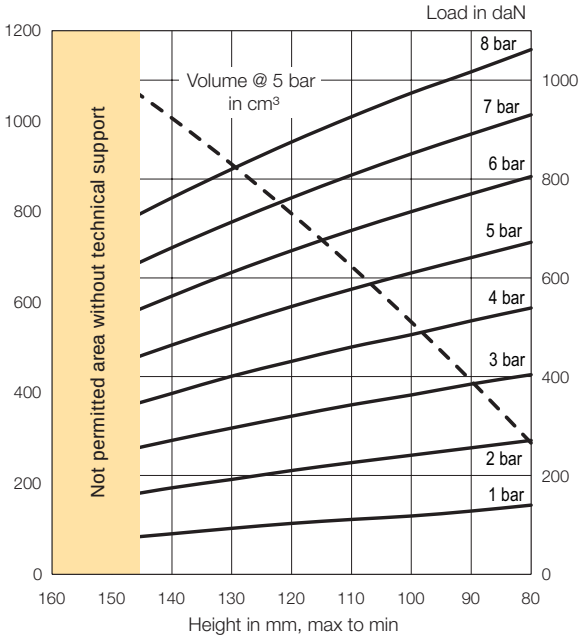

Order Code

Materials	Cups	Standard cups	Stainless steel cups
Standard temperature	Steel	**KY8011**	-
High temperature CR		-	-
Extreme high temp. ECO		-	-

Technical data

Air port inlet	G1/4"
Rec / Max pressure [bar]	5,5 / 8
Force to Hmin @ 0 bar [N]	80
Weight [kg]	1,50

Dimensions [mm]

Ø maxi.	160
Øe	190
H static	120
H min.	80
H max.	160
H recommended	145

Fastening torque [Nm]

G1/4"	15
M8	12



Dynamic characteristic values

Pressure p [bar]	2	4	6
Stiffness [daN/cm]	6,0	12,3	18,0
Natural frequency [Hz]	2,7	2,7	2,6
H2 rec for isolation [mm]		120	

Misalignment for H between [mm]

Axial	A = 5 mm	90 to 150
	A = 10 mm	95 to 145
Angular	Angle α = 5°	90 to 145
	Angle α = 10°	95 to 140
	Angle α = 15°	100 to 135

Static characteristic values

Pressure p [bar]		Force F [daN]						
		3	4	5	6	7	8	Vol. V [cm³]
Height H [mm]	**80**	404	539	672	805	930	1062	290
	100	363	485	610	734	851	974	557
	120	320	431	542	655	762	875	796
	140	271	366	464	563	661	762	1007
	150	244	331	421	513	605	700	1101
	160	213	294	377	460	546	633	1189
	-	-	-	-	-	-	-	-

Tel: +45 63 12 83 00 | Email: ps@hymatik.com | www.hymatik.com | Hvidkaervej 27a, DK-5250 Odense SV, Denmark

Type x Number of Convolution: **7" x 2, Ø 155**

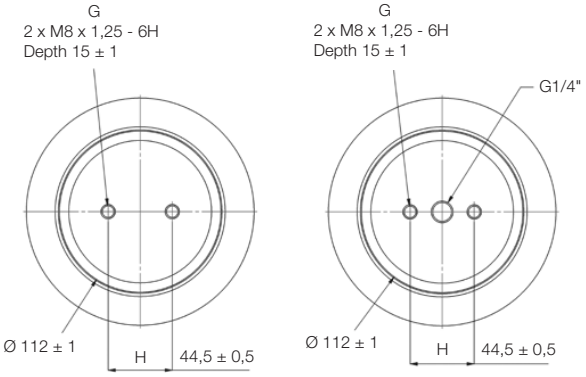

Adiabatic characteristic curves / Dynamic movements

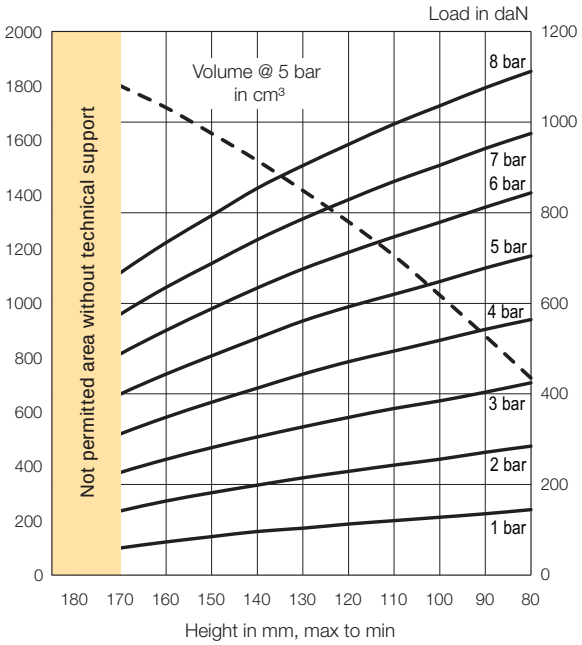

Order Code

Materials	Cups	Standard cups	Stainless steel cups
Standard temperature	Steel	**KY8012**	-
High temperature CR		-	-
Extreme high temp. ECO		-	-

Technical data

Air port inlet	G1/4
Rec / Max pressure [bar]	5,5 / 8
Force to Hmin @ 0 bar [N]	100
Weight [kg]	1,60

Dimensions [mm]

Ø maxi.	160
Øe	205
H static	125
H min.	80
H max.	185
H recommended	170

Fastening torque [Nm]

G1/4"	15
M8	12



Dynamic characteristic values

Pressure p [bar]	2	4	6
Stiffness [daN/cm]	5,8	11,1	16,4
Natural frequency [Hz]	2,5	2,5	2,4
H2 rec for isolation [mm]		130	

Misalignment for H between [mm]

Axial	A = 5 mm	90 to 175
	A = 10 mm	95 to 165
Angular	Angle α = 5°	90 to 170
	Angle α = 10°	95 to 165
	Angle α = 15°	100 to 160

Static characteristic values

Pressure p [bar]		Force F [daN]						
		3	4	5	6	7	8	Vol. V [cm³]
Height H [mm]	**80**	424	564	704	844	975	1112	725
	100	385	518	648	779	905	1036	1030
	120	348	471	592	712	829	951	1300
	140	305	413	523	634	740	854	1525
	150	281	382	484	588	688	794	1625
	160	255	348	444	540	635	734	1720
	170	227	312	400	488	576	667	1800

Tel: +45 63 12 83 00 | Email: ps@hymatik.com | www.hymatik.com | Hvidkaervej 27a, DK-5250 Odense SV, Denmark

Type x Number of Convolution: **8" x 2, Ø 185**

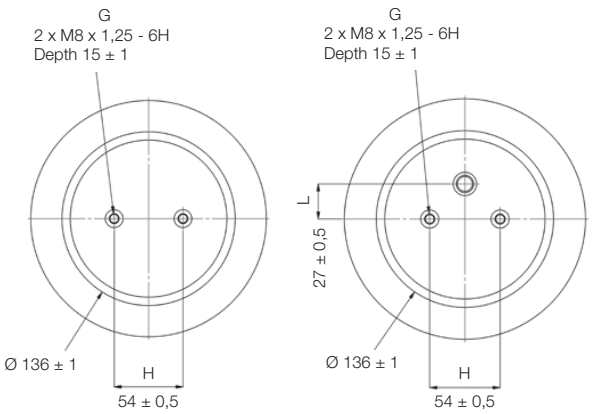

Adiabatic characteristic curves / Dynamic movements

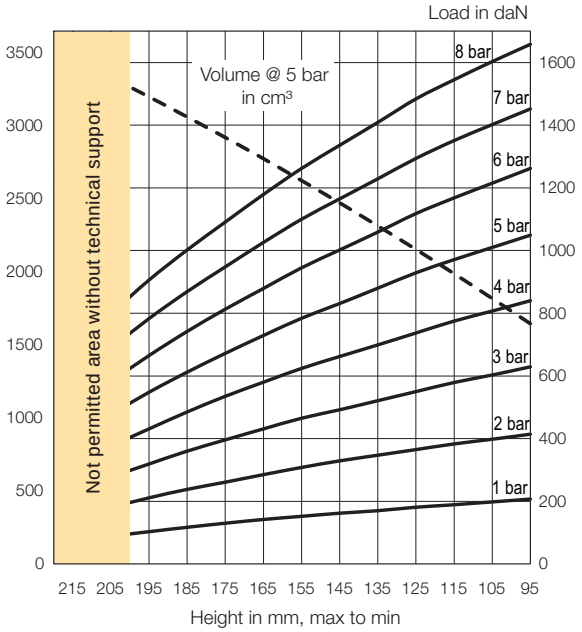

Order Code

Materials	Cups	Standard cups	Stainless steel cups
Standard temperature	Steel	**KY9589**	-
High temperature CR		-	-
Extreme high temp. ECO		-	-

Technical data

Air port inlet	G1/4"
Rec / Max pressure [bar]	5,5 / 8
Force to Hmin @ 0 bar [N]	30
Weight [kg]	2,00

Dimensions [mm]

Ø maxi.	200
Øe	230
H static	160
H min.	95
H max.	220
H recommended	200

Fastening torque [Nm]

G1/4"	15
M8	12



Dynamic characteristic values

Pressure p [bar]	2	4	6
Stiffness [daN/cm]	5,4	10,1	15,1
Natural frequency [Hz]	2,1	2,1	2,0
H2 rec for isolation [mm]		160	

Misalignment for H between [mm]

Axial	A = 5 mm	100 to 205
	A = 10 mm	105 to 195
Angular	Angle α = 5°	105 to 200
	Angle α = 10°	115 to 195
	Angle α = 15°	120 to 190

Static characteristic values

Pressure p [bar]		Force F [daN]						
		3	4	5	6	7	8	Vol. V [cm³]
Height H [mm]	**95**	629	840	1049	1262	1452	1658	1646
	115	579	775	971	1168	1351	1545	1989
	135	521	699	880	1059	1229	1409	2316
	155	465	624	784	945	1100	1262	2627
	175	396	535	672	813	948	1091	2922
	195	319	431	548	665	783	906	3201
	205	277	376	477	582	688	798	3334

Parker Hannifin Corporation
Pneumatic Division - Europe

Tel: +45 63 12 83 00 | Email: ps@hymatik.com | www.hymatik.com | Hvidkaervej 27a, DK-5250 Odense SV, Denmark

Type x Number of Convolution: **10" x 2, Ø 200**

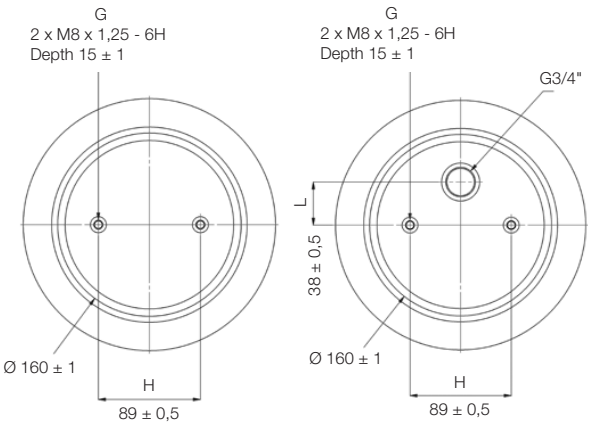

Adiabatic characteristic curves / Dynamic movements

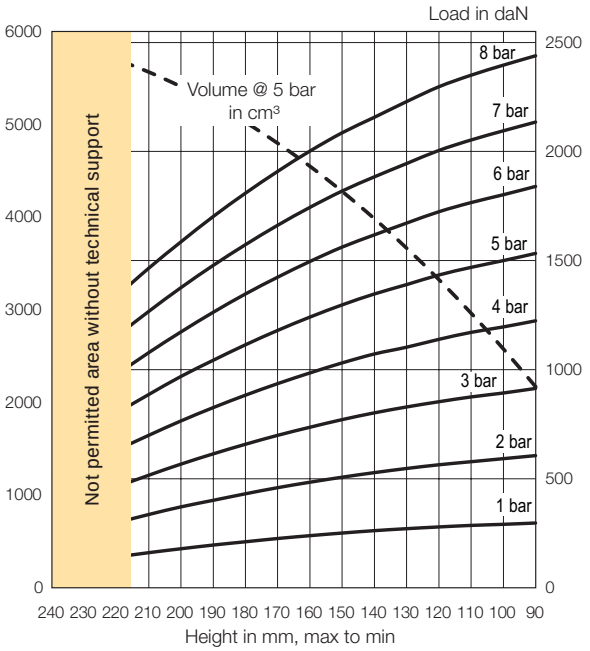

Order Code

Materials	Cups	Standard cups	Stainless steel cups
Standard temperature	Steel	**KY9611**	-
High temperature CR		-	-
Extreme high temp. ECO		-	-

Technical data

Air port inlet	G3/4"
Rec / Max pressure [bar]	5,5 / 8
Force to Hmin @ 0 bar [N]	60
Weight [kg]	2,70

Dimensions [mm]

Ø maxi.	240
Øe	270
H static	165
H min.	90
H max.	240
H recommended	215

Fastening torque [Nm]

G3/4"	50
M8	12



Dynamic characteristic values

Pressure p [bar]	2	4	6
Stiffness [daN/cm]	7,0	14,4	20,7
Natural frequency [Hz]	1,9	1,8	1,8
H2 rec for isolation [mm]		165	

Misalignment for H between [mm]

Axial	A = 5 mm	105 to 225
	A = 10 mm	115 to 215
Angular	Angle α = 5°	105 to 220
	Angle α = 10°	110 to 210
	Angle α = 15°	120 to 205

Static characteristic values

Pressure p [bar]		Force F [daN]						
		3	4	5	6	7	8	Vol. V [cm³]
Height H [mm]	**90**	914	1224	1533	1840	2135	2439	2166
	110	875	1171	1469	1766	2053	2350	2959
	130	829	1103	1390	1672	1945	2229	3661
	150	771	1031	1297	1562	1819	2086	4273
	170	699	936	1180	1424	1662	1909	4793
	210	516	699	886	1078	1267	1465	5562
	240	340	470	605	744	890	1040	5900

Tel: +45 63 12 83 00 | Email: ps@hymatik.com | www.hymatik.com | Hvidkaervej 27a, DK-5250 Odense SV, Denmark

Type x Number of Convolution: **13" x 2, Ø 300**

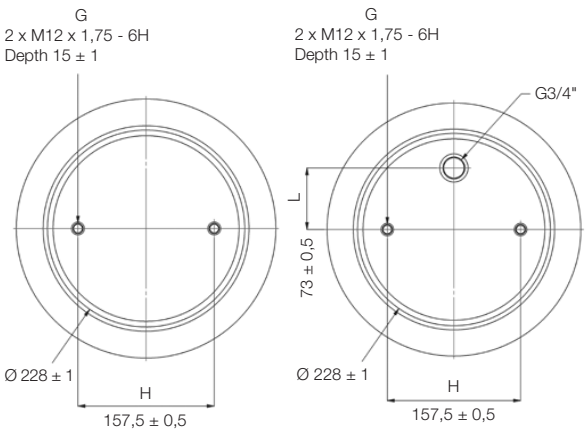

Adiabatic characteristic curves / Dynamic movements

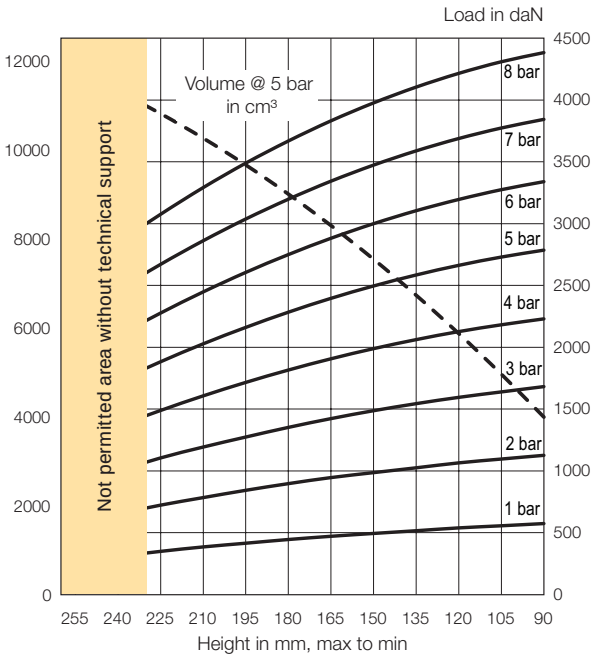

Order Code

Materials	Cups	Standard cups	Stainless steel cups
Standard temperature	Steel	**KY9591**	-
High temperature CR		-	-
Extreme high temp. ECO		-	-

Technical data

Air port inlet	G3/4"
Rec / Max pressure [bar]	5,5 / 8
Force to Hmin @ 0 bar [N]	100
Weight [kg]	4,60

Dimensions [mm]

Ø maxi.	310
Øe	340
H static	175
H min.	90
H max.	260
H recommended	230

Fastening torque [Nm]

G3/4"	50
M12	20



Dynamic characteristic values

Pressure p [bar]	2	4	6
Stiffness [daN/cm]	11,2	21,3	29,7
Natural frequency [Hz]	1,8	1,7	1,7
H2 rec for isolation [mm]		175	

Misalignment for H between [mm]

Axial	A = 5 mm	110 to 240
	A = 10 mm	115 to 230
Angular	Angle α = 5°	105 to 235
	Angle α = 10°	115 to 225
	Angle α = 15°	125 to 215

Static characteristic values

Pressure p [bar]		Force F [daN]						
		3	4	5	6	7	8	Vol. V [cm³]
Height H [mm]	**90**	1682	2230	2786	3340	3844	4384	3989
	120	1595	2127	2663	3196	3689	4216	5866
	150	1487	1989	2496	3000	3474	3977	7536
	180	1352	1816	2284	2750	3198	3669	8999
	210	1193	1607	2028	2448	2862	3292	10255
	240	1000	1362	1726	2093	2464	2845	11305
	260	854	1170	1495	1821	2160	2505	11891

Tel: +45 63 12 83 00 | Email: ps@hymatik.com | www.hymatik.com | Hvidkaervej 27a, DK-5250 Odense SV, Denmark

Type x Number of Convolution: **16" x 2, Ø 350**

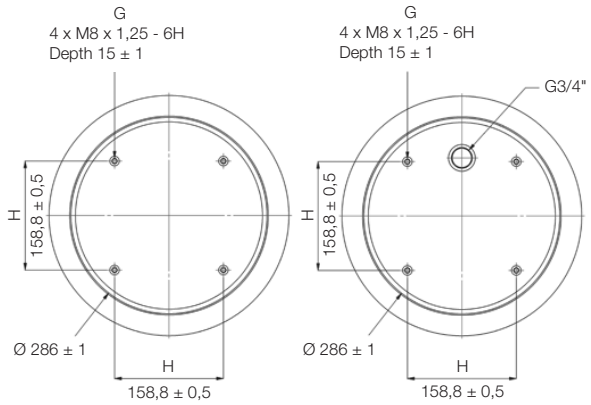

Adiabatic characteristic curves / Dynamic movements

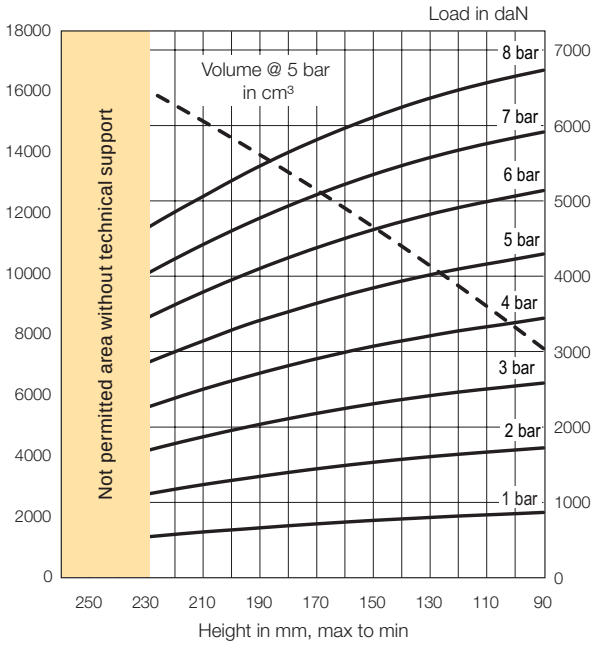

Order Code

Materials	Cups	Standard cups	Stainless steel cups
Standard temperature	Steel	**KY8007**	-
High temperature CR		-	-
Extreme high temp. ECO		-	-

Technical data

Air port inlet	G3/4"
Rec / Max pressure [bar]	5,5 / 8
Force to Hmin @ 0 bar [N]	100
Weight [kg]	6,20

Dimensions [mm]

Ø maxi.	370
Øe	400
H static	175
H min.	90
H max.	260
H recommended	230

Fastening torque [Nm]

G3/4"	50
M8	12



Dynamic characteristic values

Pressure p [bar]	2	4	6
Stiffness [daN/cm]	20,2	39,1	58,1
Natural frequency [Hz]	1,9	1,9	1,8
H2 rec for isolation [mm]		175	

Misalignment for H between [mm]

Axial	A = 5 mm	115 to 235
	A = 10 mm	120 to 230
Angular	Angle α = 5°	110 to 235
	Angle α = 10°	120 to 220
	Angle α = 15°	135 to 210

Static characteristic values

Pressure p [bar]		Force F [daN]						
		3	4	5	6	7	8	Vol. V [cm³]
Height H [mm]	**90**	2583	3443	4295	5137	5913	6733	7551
	120	2463	3275	4095	4910	5672	6470	9619
	150	2308	3072	3845	4618	5349	6109	11556
	180	2110	2813	3528	4245	4932	5643	13363
	210	1870	2502	3142	3791	4421	5059	15039
	240	1584	2130	2690	3256	3817	4396	16584
	260	1362	1838	2330	2834	3342	3862	17541

Tel: +45 63 12 83 00 | Email: ps@hymatik.com | www.hymatik.com | Hvidkaervej 27a, DK-5250 Odense SV, Denmark

Customer Application Request - Technical Parameters

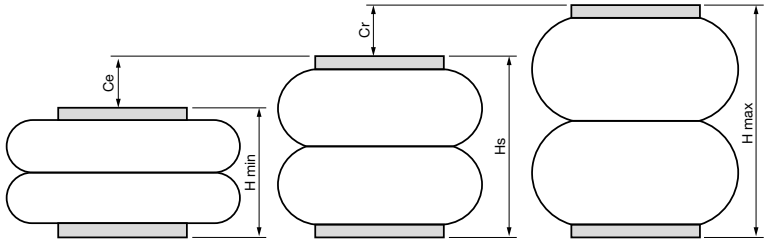

Static height (Hs): mm
Minimum height (Hmin): mm
Maximum height (Hmax): mm
Rebound stroke (Cr): mm
Compression stroke (Ce): mm

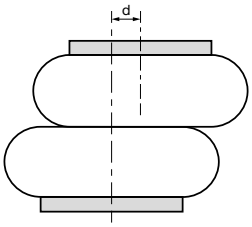

Axial misalignment (d): mm

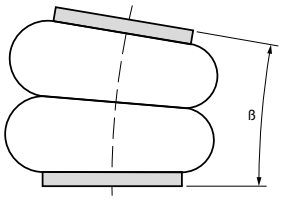

Angular misalignment, tilt angle (ß): °

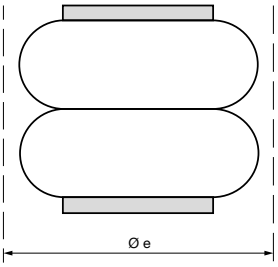

Available space (Øe): mm

Other:

Operationnal Parameters

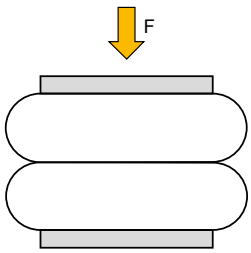

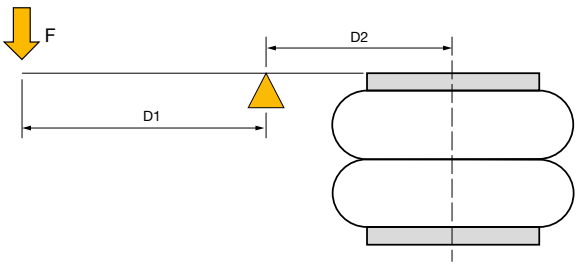

Total load (FT): daN
Load per bellow (F): daN
Number of bellows:

Charge (F): daN
Distance D1: mm
Distance D2: mm

Parker Hannifin Corporation
Pneumatic Division - Europe

Tel: +45 63 12 83 00 | Email: ps@hymatik.com | www.hymatik.com | Hvidkaervej 27a, DK-5250 Odense SV, Denmark

PDE2576TCUK

Air Bellows

Air Supply

Maximum available pressure: _____ bar

Air Management:

- ☐ Air spring (closed volume)
- ☐ Levelling valve
- ☐ Other (please describe):

Environmental Parameters

Environment	Outside _____	or internal in a building or on a machine
Temperature STATIC	Mini: _____ °C	Maxi: _____ °C
Temperature DYNAMIC	Mini: _____ °C	Maxi: _____ °C
	Specification: _____	
Protection / Treatment	Salt spray test resistance: _____	Hours (white rust)
	_____	Hours (red rust)

Other Specifications:

Other Requirements:

Sent by:

Parker Worldwide

Europe, Middle East, Africa

AE – United Arab Emirates, Dubai
Tel: +971 4 8127100
parker.me@parker.com

AT – Austria, Wiener Neustadt
Tel: +43 (0)2622 23501-0
parker.austria@parker.com

AT – Eastern Europe, Wiener Neustadt
Tel: +43 (0)2622 23501 900
parker.easteurope@parker.com

AZ – Azerbaijan, Baku
Tel: +994 50 2233 458
parker.azerbaijan@parker.com

BE/LU – Belgium, Nivelles
Tel: +32 (0)67 280 900
parker.belgium@parker.com

BG – Bulgaria, Sofia
Tel: +359 2 980 1344
parker.bulgaria@parker.com

BY – Belarus, Minsk
Tel: +48 (0)22 573 24 00
parker.poland@parker.com

CH – Switzerland, Etoy
Tel: +41 (0)21 821 87 00
parker.switzerland@parker.com

CZ – Czech Republic, Klecany
Tel: +420 284 083 111
parker.czechrepublic@parker.com

DE – Germany, Kaarst
Tel: +49 (0)2131 4016 0
parker.germany@parker.com

DK – Denmark, Ballerup
Tel: +45 43 56 04 00
parker.denmark@parker.com

ES – Spain, Madrid
Tel: +34 902 330 001
parker.spain@parker.com

FI – Finland, Vantaa
Tel: +358 (0)20 753 2500
parker.finland@parker.com

FR – France, Contamine s/Arve
Tel: +33 (0)4 50 25 80 25
parker.france@parker.com

GR – Greece, Athens
Tel: +30 210 933 6450
parker.greece@parker.com

HU – Hungary, Budaörs
Tel: +36 23 885 470
parker.hungary@parker.com

IE – Ireland, Dublin
Tel: +353 (0)1 466 6370
parker.ireland@parker.com

IL – Israel
Tel: +39 02 45 19 21
parker.israel@parker.com

IT – Italy, Corsico (MI)
Tel: +39 02 45 19 21
parker.italy@parker.com

KZ – Kazakhstan, Almaty
Tel: +7 7273 561 000
parker.easteurope@parker.com

NL – The Netherlands, Oldenzaal
Tel: +31 (0)541 585 000
parker.nl@parker.com

NO – Norway, Asker
Tel: +47 66 75 34 00
parker.norway@parker.com

PL – Poland, Warsaw
Tel: +48 (0)22 573 24 00
parker.poland@parker.com

PT – Portugal
Tel: +351 22 999 7360
parker.portugal@parker.com

RO – Romania, Bucharest
Tel: +40 21 252 1382
parker.romania@parker.com

RU – Russia, Moscow
Tel: +7 495 645-2156
parker.russia@parker.com

SE – Sweden, Spånga
Tel: +46 (0)8 59 79 50 00
parker.sweden@parker.com

SL – Slovenia, Novo Mesto
Tel: +386 7 337 6650
parker.slovenia@parker.com

TR – Turkey, Istanbul
Tel: +90 216 4997081
parker.turkey@parker.com

UA – Ukraine, Kiev
Tel: +48 (0)22 573 24 00
parker.poland@parker.com

UK – United Kingdom, Warwick
Tel: +44 (0)1926 317 878
parker.uk@parker.com

ZA – South Africa, Kempton Park
Tel: +27 (0)11 961 0700
parker.southafrica@parker.com

North America

CA – Canada, Milton, Ontario
Tel: +1 905 693 3000

US – USA, Cleveland
Tel: +1 216 896 3000

Asia Pacific

AU – Australia, Castle Hill
Tel: +61 (0)2-9634 7777

CN – China, Shanghai
Tel: +86 21 2899 5000

HK – Hong Kong
Tel: +852 2428 8008

IN – India, Mumbai
Tel: +91 22 6513 7081-85

JP – Japan, Tokyo
Tel: +81 (0)3 6408 3901

KR – South Korea, Seoul
Tel: +82 2 559 0400

MY – Malaysia, Shah Alam
Tel: +60 3 7849 0800

NZ – New Zealand, Mt Wellington
Tel: +64 9 574 1744

SG – Singapore
Tel: +65 6887 6300

TH – Thailand, Bangkok
Tel: +662 186 7000

TW – Taiwan, Taipei
Tel: +886 2 2298 8987

South America

AR – Argentina, Buenos Aires
Tel: +54 3327 44 4129

BR – Brazil, Sao Jose dos Campos
Tel: +55 800 727 5374

CL – Chile, Santiago
Tel: +56 2 623 1216

MX – Mexico, Toluca
Tel: +52 72 2275 4200

European Product Information Centre
Free phone: 00 800 27 27 5374
(from AT, BE, CH, CZ, DE, DK, EE, ES, FI, FR, IE, IL, IS, IT, LU, MT, NL, NO, PL, PT, RU, SE, SK, UK, ZA)

© 2019 Parker Hannifin Corporation. All rights reserved.

Catalogue PDE2576TCUK - V7 - June 2019

Parker Hannifin Ltd.
Tachbrook Park Drive
Tachbrook Park,
Warwick, CV34 6TU
United Kingdom
Tel.: +44 (0) 1926 317 878
Fax: +44 (0) 1926 317 855
parker.uk@parker.com
www.parker.com

Your local authorized Parker distributor