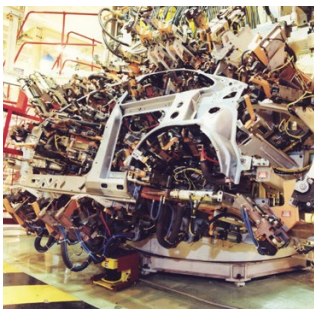



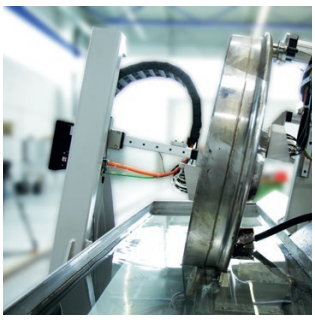





Rotary Actuators

Series VRS / VRA

Sizes 32, 40, 50, 63, 80, 100 & 125 mm

Rotation 96°, 186° and 366°

PDE2655TCUK



Parker

ENGINEERING YOUR SUCCESS.

WARNING

FAILURE OR IMPROPER SELECTION OR IMPROPER USE OF THE PRODUCTS AND/OR SYSTEMS DESCRIBED HEREIN OR RELATED ITEMS CAN CAUSE DEATH, PERSONAL INJURY AND PROPERTY DAMAGE.
This document and other information from Parker Hannifin Corporation, its subsidiaries and authorized distributors provide product and/or system options for further investigation by users having technical expertise. It is important that you analyze all aspects of your application and review the information concerning the product or system in the current product catalog. Due to the variety of operating conditions and applications for these products or systems, the user, through its own analysis and testing, is solely responsible for making the final selection of the products and systems and assuring that all performance, safety and warning requirements of the application are met. The products described herein, including without limitation, product features, specifications, designs, availability and pricing, are subject to change by Parker Hannifin Corporation and its subsidiaries at any time without notice.

SALE CONDITIONS

The items described in this document are available for sale by Parker Hannifin Corporation, its subsidiaries or its authorized distributors. Any sale contract entered into by Parker will be governed by the provisions stated in Parker's standard terms and conditions of sale (copy available upon request).

Contents

VRS / VRA Rotary Actuators (Ø32 to Ø125 mm) Change title line
Product Overview ..... 4 – 5
Material Specification 6
Technical Data ..... 6 – 7
Dimensions ..... 8 – 9
Ordering References 10
Seal Kits 10
Sensors ..... 11 – 16

Air Quality
Specifying Air Quality 17

Tel: +45 63 12 83 00 | Email: ps@hymatik.com | www.hymatik.com | Hvidkaervej 27a, DK-5250 Odense SV, Denmark

Rotary Actuators - Series VRS / VRA

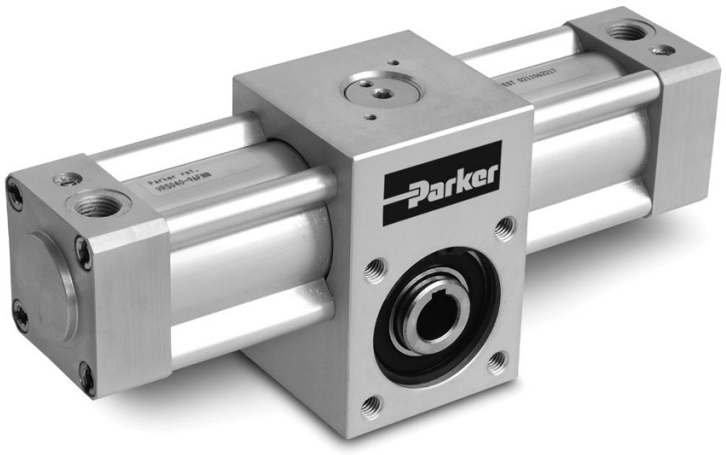

- Transforms the rectilinear motion of 2 single acting opposite cylinders into rotary motion via a rack and pinion drive contained within the cylinder body.
- Various tasks can be handled by use of a torque cylinder, including gate opening and closing, clamping and agitation of fluids and raw materials.
- Key points of the VRS / VRA cylinder design
  - lightweight materials (aluminium alloy)
  - accuracy in motion (cushioning, clearance compensation - bores up to 80mm)
  - long life (floating piston, nitrile seals, adjustable cushions)
  - good resistance to corrosion
  - easy cleaning (extruded body)
- Operates with dry, lubricated or non lubricated air
- The range includes bores from Ø32 to 125 mm with rotative angles of 96°, 186° and 366°
- Magnetic piston versions can be fitted with P8S sensors and brackets
- Several options are available; rotative angle adjustable stop, male shaft or female shaft (through)

VRS standard version (Ø32 to 125 mm)

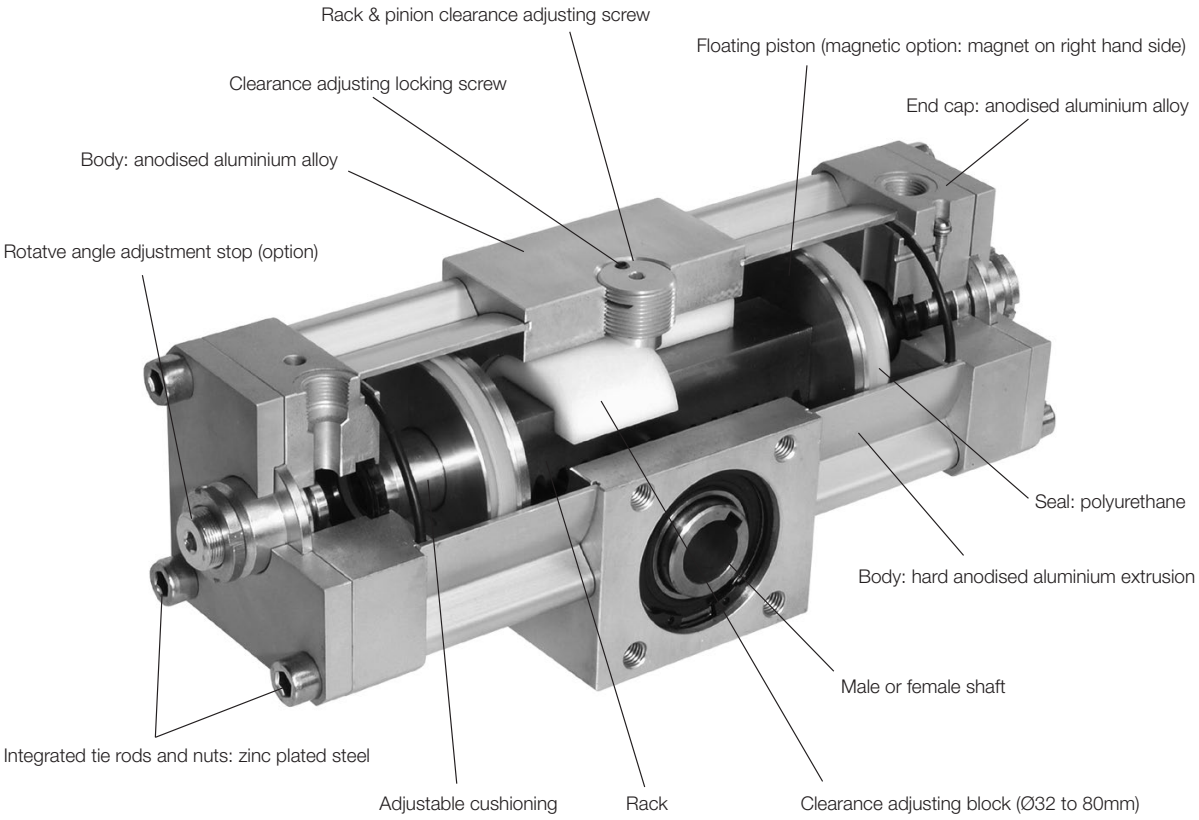

VRA version (Ø32 to 80 mm) for corrosive environment

- Aluminium blanking plate for the clearance adjustment screw
- Rack and pinion gear contained in waterproof enclosure (silicone seal)
- Stainless steel waterproof ball bearings
- Stainless steel pinion
- Stainless steel circlips, internal tie rods and screws
- Optional Magnetic version



Material specification

	VRS	VRA
Rack	XC40 steel	XC40 steel
Floating piston	Aluminium	Aluminium
Magnet (***M version)	Magnetic elastomer	Magnetic elastomer
Piston seals	Polyurethane	Polyurethane
Rack and pinion gear seals		Silicone
Body	Anodised aluminium	Anodised aluminium
Integrated tie rods, nuts, circlips, screws	Zinc plated steel	303 stainless steel
Body	Hard anodised aluminium extrusion	Hard anodised aluminium extrusion
End caps	Anodised aluminium	Anodised aluminium
Male or female transmission shaft	XC40 steel	304 stainless steel (female)
Cushion sleeve	Brass	Brass
Clearance adjusting block (Ø 32 to 80 mm)	Acetal	Acetal
Adjusting screw blanking plate		Aluminium + silicone seal

Condition of use

	Ø 32 to 80 mm	Ø 100 and 125 mm
Temperature range	-10°C to +60°C (14°F to 140°F)	
Pressure range (bar)	0.5 to 10 7 to 145 psi)	0.3 to 10 (4 to 145 psi)
Air condition	Filtered air 40µ, lubricated or non lubricated, dry or non dry	

Theoretical torque

Ø Bore mm	Pinion Module	ØPm	Torque (N.m) 2 bar	4 bar	6 bar	8 bar	10 bar
32	1.5	20	2.4	4.8	7.2	9.6	12
40	2	40	5.0	10.0	15.0	20.0	25
50	2	40	8.0	16.0	24.0	32.0	40
63	3	54	17.0	34.0	51.0	68.0	85
80	3	54	27.0	54.0	81.0	108.0	135
100	5	75	58.0	116.0	174.0	232.0	290
125	5	75	92.0	184.0	276.0	368.0	460

The table above shows the theoretical torque at different pressures. A maximum efficiency of 80 % should be assured due to functional losses.

Technical data

Bore (mm)		32	40	50	63	80	100	125
Maximum load (N)	Axial	110	350	350	1050	1050	2500	2500
	Radial	35	220	220	900	900	2000	2000
Cushion angle (°)		50	45	45	32	32	30	30
Nominal moment of inertia (kg.m²)		0.003	0.01	0.02	0.1	0.2	0.3	0.4
Rotative angle (-1°)					96°, 186°, 366°			
Angular tolerance		0°10'	0°10'	0°10'	0°10'	0°10'	1°	1°

Tel: +45 63 12 83 00 | Email: ps@hymatik.com | www.hymatik.com | Hvidkaervej 27a, DK-5250 Odense SV, Denmark

Technical data

Rotative angle adjustable stop and cushion angle

Ø Cylinder bore (mm)		32	40	50	63	80	100	125
		96°	96°	96°	96°	96°	96°	96°
Rotative angle	Ω	186°	186°	186°	186°	186°	186°	186°
		366°	366°	366°	366°	366°	366°	366°
Cushion angle	α	50°	45°	45°	32°	32°	30°	30°
Adjustable angle (R option: Adjustable stop)	β	15°	15°	15°	15°	15°	15°	15°

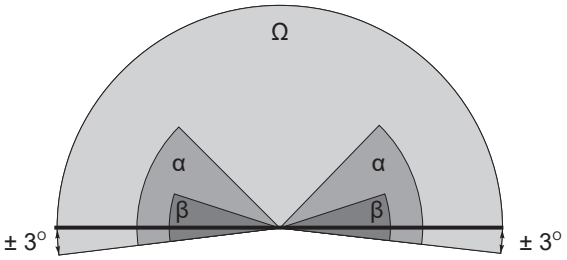

Maintenance

After 2 million cycles in nominal moment of inertia conditions, the cylinder should be dismantled and seals replaced.
When assembling, grease gear and rack with ESSO GP GREASE or equivalent. Adjust clearance of gear and rack (Ø 32 to 80 cylinder bore) with the screw (1) in order to obtain the following minimum operating pressures (unloaded cylinder), then secure the adjustment with the screw (2).



Backlash adjustment

Ø Bore (mm)	Minimum operating pressure
Ø 32 and 40	0.5 bar (7 psi)
Ø 50 and 63	0.4 bar (6 psi)
Ø 80	0.3 bar (4 psi)

Weight - kg (lbs)

Standard cylinder : Female shaft, 0° rotation, magnetic or non magnetic

Bore (mm)	32	40	50	63	80	100	125
Standard cylinder	1.30 (2.9)	2.20 (4.8)	2.50 (5.5)	5.30 (11.7)	6.20 (13.7)	15.70 (34.6)	17.80 (39.2)
For male shaft	0.10 (0.2)	0.20 (0.4)	0.20 (0.4)	0.45 (1.0)	0.45 (1.0)	1.50 (3.3)	1.50 (3.3
For one adjustable stop	0.15 (0.3)	0.25 (0.5)	0.35 (0.8)	0.35 (0.8)	0.40 (0.9)	1.00 (2.2)	1.00 (2.2)
Per 90° of rotation	0.10 (0.2)	0.30 (0.7)	0.40 (0.9)	0.70 (1.5)	0.80 (1.8)	2.00 (4.4)	2.30 (5.0)

Example : VRM050-186FRN Weight = 2.5 + 0.35 x 1 + 0.40 x 2 = 3.65 kg
(5.5 + 0.77 x 1 + 0.88 x 2 = 8.04 lbs)

Tel: +45 63 12 83 00 | Email: ps@hymatik.com | www.hymatik.com | Hvidkaervej 27a, DK-5250 Odense SV, Denmark

Dimensions (mm)

Cylinder bores Ø 32 to 80mm

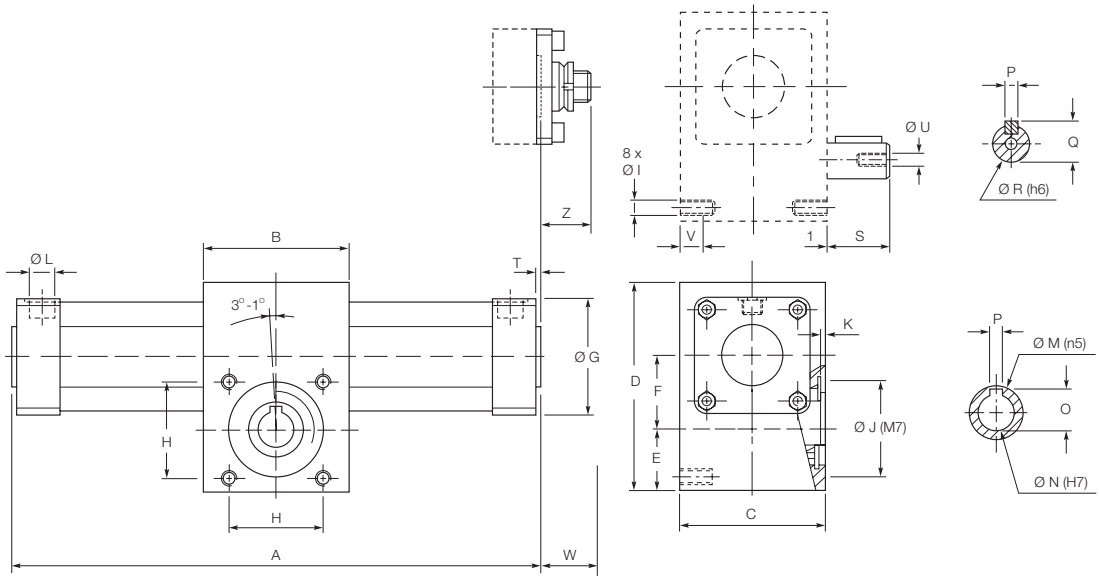

The location of the shaft key is indicated when the pistons are on the left.
First rotation as indicated (clockwise).

Ω : Rotative angle 96°, 186° or 366°

Ø	A*	B	C	D	E	F	G	H	I	J	K	L
32	128 + 0.523 Ω	50	50	72	25.0	24.0	45	35	M6	35	2.0	G1/8"
40	163 + 0.6981 Ω	65	65	95	32.5	29.5	52	47	M8	47	3.0	G1/4"
50	163 + 0.6981 Ω	65	65	95	32.5	29.5	65	47	M8	47	3.0	G1/4"
63	209 + 0.9424 Ω	95	95	126	40.0	38.0	75	62	M10	62	3.5	G3/8"
80	209 + 0.9424 Ω	95	95	126	40.0	38.0	95	62	M10	62	3.5	G3/8"

Ø	M	N	O	P	Q	R	S	T	U	V	W*	Z
32	17	10	11.7	4	13.5	12	20	2	M4 x 10	10	22	31
40	25	15	17.2	5	18.0	16	30	3	M5 x 15	12	24	35
50	25	15	17.2	5	18.0	16	30	3	M5 x 15	12	29	35
63	35	24	27.2	8	27.0	24	40	3	M8 x 20	15	32	32
80	35	24	27.2	8	27.0	24	40	3	M8 x 20	15	32	32

* Add W to A for the magnetic version (magnet on right hand side as standard).

Dimensions (mm)

Cylinder bores Ø 100 to 125 mm

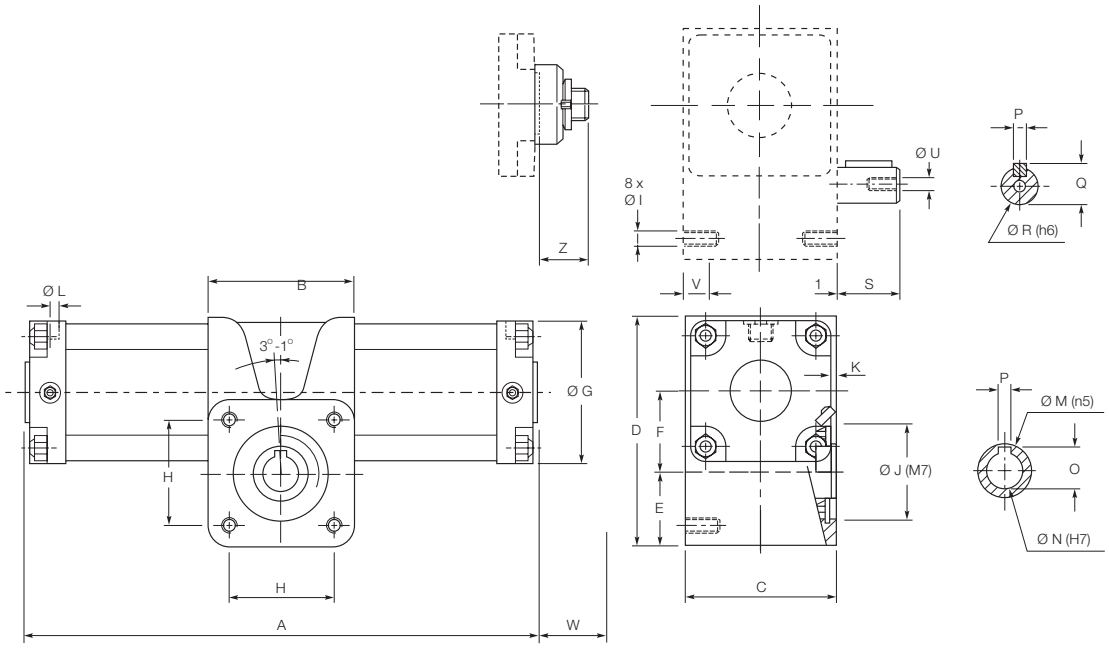

The location of the shaft key is indicated when the pistons are on the left.
First rotation as indicated (clockwise).

Ω : Rotative angle 96°, 186° or 366°

Ø	A*	B	C	D	E	F	G	H	I	J	K	L
100	304 + 1.309 Ω	130	142	188	64.0	53.5	115	90	M14	90	4.5	G1/2"
125	304 + 1.309 Ω	130	142	188	64.0	53.5	140	90	M14	90	4.5	G1/2"

Ø	M	N	O	P	Q	R	S	U	V	W*	Z
100	55	35	38.7	10	38.5	35	50	M12 x 20	24	4	38
125	55	35	38.7	10	38.5	35	50	M12 x 20	24	4	38

* Add W to A for the magnetic version (magnet on right hand side as standard).

Tel: +45 63 12 83 00 | Email: ps@hymatik.com | www.hymatik.com | Hvidkaervej 27a, DK-5250 Odense SV, Denmark

Ordering references

Standard									Option	
V R	S	M	0 5 0	-	1 8 6	F	R	N	1	3

	Series
M	Magnetic

	Version
S	Standard Bores 32 - 125 mm
A	Corrosive Environments Bores 32 - 80mm

Ø mm
32
40
50
63
80
100
125

Rotation Angle
096 = 96°
186 = 186°
366 = 366°

	Shaft
F	Female
M	Male

	Left Endplate
N	Without angle adjustment
R	With angle adjustment

	Right Endplate
N	Without angle adjustment
R	With angle adjustment

	Left Endplate
1	Standard position of port
2, 3, 4	Other positions

	Right Endplate
1	Standard position of port
2, 3, 4	Other positions

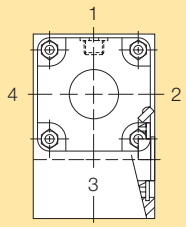

Position of port to diagram above. (Position 1 as standard if not specified)

Maintenance - Seal kit

Bore (mm)	32	40	50	63	80	100	125
Actuators VRS/ VRSM Actuators VRA / VRAM	JJVRA032	JJVRA040	JJVRA050	JJVRA063	JJVRA080	JJVR100	JJVR125

Sensor brackets

VRSM and VRAM cylinders can be fitted with sensors.
These sensors use the following mounting bracket.

Ø Bore (mm)	32	40	50	63	80	100	125
Mounting bracket			P8S-TMA0X*				
A	35	39	48	50	58	70	
B	30	35	42	48	56	65	

Note: Mounting brackets and sensors must be ordered seperately
* Please consult Technical Department for 125 mm bore.

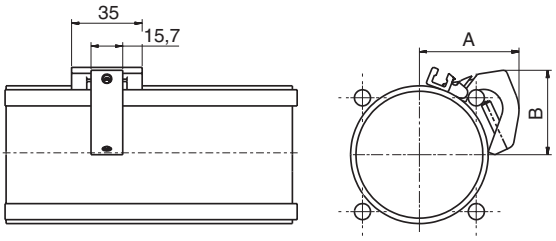

Adapter for tie-rod design

Description	Weight [kg]	Order code
Double jointed adapter for bore Ø 32 to 125 mm	0.07	P8S-TMA0X

Reed sensors

The sensors are based on proven reed switches, which offer reliable function in many applications. Simple installation, a protected position on the cylinder and clear LED indication.

P8S Electronic and Reed Sensors

The P8S Series magnetic cylinder sensor enables quick, precise and contactless sensing of the piston‘s position in cylinders. It is easy to mount, can be used in numerous applications and offers an outstanding price-performance ratio.



Product Overview

As the term magnetic switch suggests, these are operated by magnetic fields; another description widely used is magnetic „SENSOR“. As our eyes sense change of light, our ears sense the change of sound, magnetic sensors / switches sense the change of magnetic flux in pneumatic and hydraulic cylinders. When magnetic sensors sense a magnetic field it will give a switching signal, through a control circuit, allowing sensing or control operation to be achieved.

Because of the characteristics of magnetic sensors they can sense a change of magnetic field relative to the position of the magnet, such as in a pneumatic or hydraulic cylinder, whereby the magnet is attached to a moving piston and thus the position of the moving part (ie Piston) can be detected.

The magnet is mounted on the piston of the cylinder and thus moves with the piston.

The magnetic sensor (switch) is fixed either directly to the cylinder or with an additional mounting bracket. When the piston (magnet) moves to the position under a magnetic sensor, the switch will operate due to the change of the magnetic field and give a switching signal.

Thus the position of the piston can be identified and a resulting signal generated to continue the sequence of a circuit.

Magnetic sensors available can be classified into two different groups, they are sensors with contacts which are called mechanically operated or reed sensors and the other type is sensors without contacts and are called solid state type or electronic.

Parker P8S Series sensors are suitable for use with a large range of Sensors. They can either be inserted directly into the cylinder tube extrusion or mounted using additional brackets. For direct mounting the sensor is positioned within the cylinder sensor groove, offering mechanical protection, then securely clamped into postion by a simple turn of a screw. For other cylinder versions there are a number of optional sensors brackets that clamp to the cylinder and offer other mounting positions. To easy installation there are several cable lengths available with either M8 connnector or flying lead. The electronic sensors are ”Solid State”, i.e. they have no moving parts. They are provided with short-circuit protection and transient protection as standard. The built-in electronics make the sensors suitable for applications with high on and off switching frequency where long service life is required.

Please note that for low temperature applications sensors are normally specified for full performance down to -30°C only. High temperature cylinders do not have a magnetic piston and therefore cannot be used with sensors.

Technical Data

Square body design, insert straight in T-slot, screw 1/4 turn

	Electronic PNP | NPN	Electric Reed
Cylinder type:	Profile with T-slot	
Cylinder type with adaptor:	Profile with S-slot (dovetail) | Tie rods | Round cylinders	
Installation:	Quarter turn, fixed by allen key 2.5 mm or flathead screwdriver	
Housing length:	29.5 mm 10 - 30 V DC	29.5 mm 5 - 30 V AC/DC
	24 mm NAMUR	29.5 mm 5 -120 V AC/DC
	29.5 mm ATEX	32.5 mm 5 - 230 V AC/DC
Output Type:	PNP | NPN	Reed
Switching (on/off) switching frequency:	± 1,000 Hz	± 400 Hz
Output Function:	Normally Open (NO) | Normally Closed (NC) 3-wire	Normally Open (NO) | Normally Closed (NC) 2-wire Normally Open (NO) 3-wire
Enclosure rating:	IP67	
	IP67 (NAMUR ATEX)	
Supply Voltage:	10 to 30 V DC	
	8.2 to 20 V DC (NAMUR 1GD)| 10 to 26 V DC (ATEX 3GD)	5 to 30 | 5 to 120 | 5 to 230 V AC/DC 2-wire, 3-wire depending on type
Power consumption:	<= 8 mA	-
	<= 10 mA (NAMUR, ATEX)	-
Voltage drop:	<= 2 V	<= 3.5 V 2-wire | <= 0.1 V 3-wire
	<= 2.2 V (NAMUR, ATEX)	-
Continuous output current Ia:	<= 100 mA	<= 100 mA 3-wire
	<= 60 mA (NAMUR) | <= 50 mA (ATEX)	<= 500 mA (DC) | <= 300 mA (AC)
Switching capacity:	-	<= 6 W
Protection class:	III	III | II 2-wire depending on type
		III 3-wire
Response sensitivity:	2.6 to 3.3 mT	2.1 to 3.4 mT
	2.8 mT (NAMUR, ATEX)	-
Overrun distance:	10 mm	
	9 mm (NAMUR, ATEX)	-
Hysteresis:	<= 0.8 mT	-
	<= 0.5 mT (NAMUR, ATEX)	-
Repetability:	<= 0.1 mT	
Reverse polarity protection:	Yes	No 2-wire
	-	Yes 3-wire
Short circuit protection:	Yes	-
Power-up pulse protection:	Yes (NAMUR, ATEX)	-
Ambiant operating temperature range:	-30 to +80 °C (PUR cable) | -30 to +70°C (PVC cable)	
	-25 to +80 °C (NAMUR 1GD) | -20 to +50°C (ATEX 3GD)	
Shock and vibration resistance:	30 g 11 ms / 10 ... 55 Hz, 1 mm	
EMC:	According to EN 60947-5-2	
International standard:	CE | C UL US | RoHs | Ex | IEC | IEC Ex	
Housing material:	Plastic polyamid PA12	
Screw material:	Stainless steel	
Cable material:	PUR (Polyurethane) | PVC (Polyvinyl Chloride)	
Conductor cross-section:	0.14 mm² | 0,12 mm² depending on type 0.14 mm² (NAMUR, ATEX)	
Indication LED colour:	Yellow, no LED reed NC	
Connector:	M8R (knurled nuts) | None (Flying lead)	

Dimensions in mm (inch)

PNP, NPN Output 10 to 30 V DC

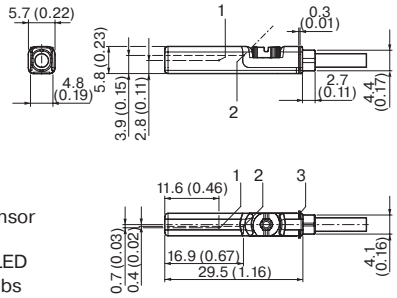

1 Position sensor element
2 Indication LED
3 Retaining ribs

Reed Output 5 to 230 V AC/DC

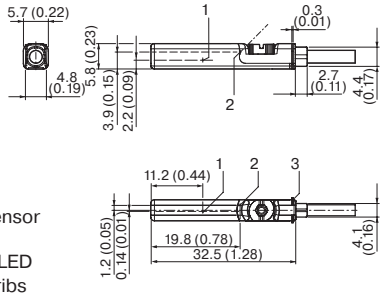

1 Position sensor element
2 Indication LED
3 Retaining ribs

Reed Output 5 to 30 V AC/DC

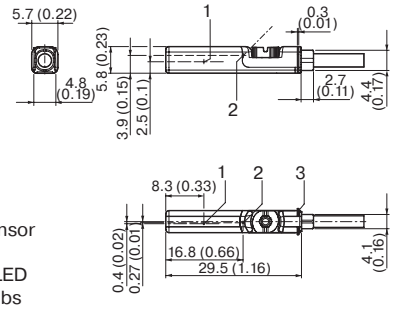

1 Position sensor element
2 Indication LED
3 Retaining ribs

Reed Output 5 to 120 V AC/DC

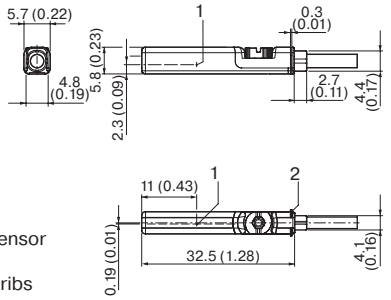

1 Position sensor element
3 Retaining ribs

NAMUR 1G, 1D,

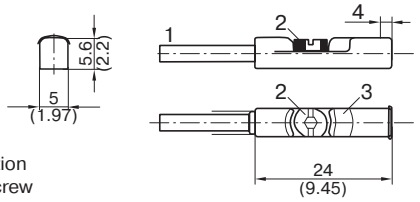

1 Connection
2 Fixing screw
3 Indication LED
4 Position of sensor element; short overrun distance: 2 mm; long overrun distance: 1.7 mm

Connector M8R

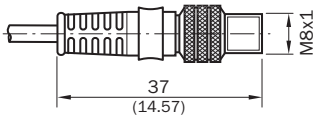

Connection type and diagram

PNP NO

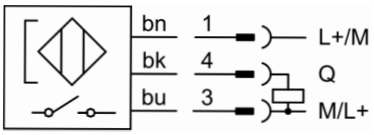

PNP NC

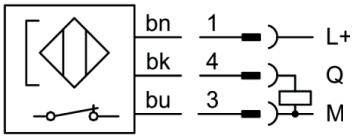

NPN NO

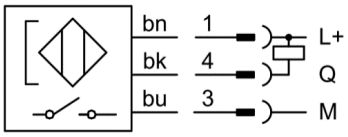

NPN NC

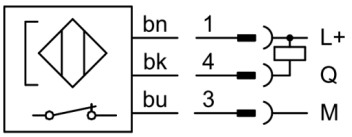

Reed NO 3-wire

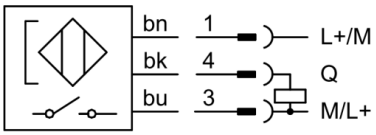

bn: brown
bk: black
bu: blue
Q: load
M: Mass
L+: Power

Reed NO 2-wire

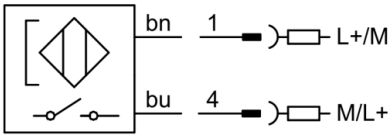

Reed NC 2-wire

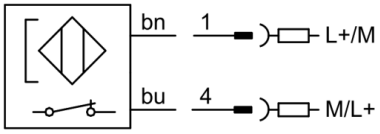

NAMUR NO ATEX 1G, 1D

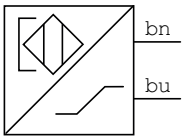

PNP NO ATEX 3G, 3D

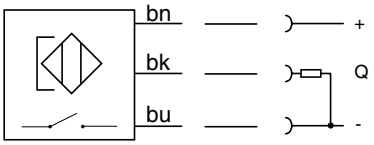

Pin assignment, M8 with knurled nut

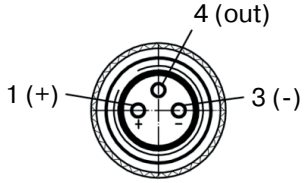

Flying leads

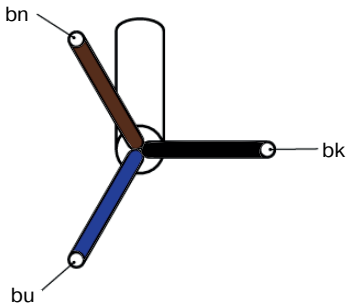

Ordering Data

Output, Function, Cable & Supply Voltage	Order Code	Weight [g]	For Product Series
With flying leads, PUR cable IP67			
Electronic PNP-NC, with LED, 3-wire, 3 metre, 10-30 V DC	**P8SAGQFAX**	35	All Series
Electronic PNP-NC, with LED, 3-wire, 10 metre, 10-30 V DC	**P8SAGQFDX**	105	All Series
Electronic PNP-NO, with LED, 3-wire, 3 metre, 10-30 V DC	**P8SAGPFAX**	35	All Series
Electronic PNP-NO, with LED, 3-wire, 10 metre, 10-30 V DC	**P8SAGPFDX**	105	All Series
Electronic NPN-NC, with LED, 3-wire, 3 metre, 10-30 V DC	**P8SAGMFAX**	35	All Series
Electronic NPN-NC, with LED, 3-wire, 10 metre, 10-30 V DC	**P8SAGMFDX**	105	All Series
Electronic NPN-NO, with LED, 3-wire, 3 metre, 10-30 V DC	**P8SAGNFAX**	35	All Series
Electronic NPN-NO, with LED, 3-wire, 10 metre, 10-30 V DC	**P8SAGNFDX**	105	All Series
Electric Reed-NO, with LED, 3-wire, 3 metre, 5-30 V AC/DC	**P8SAGSFAX**	35	All Series
Electric Reed-NO, with LED, 3-wire, 10 metre, 5-30 V AC/DC	**P8SAGSFDX**	105	All Series
Electric Reed-NO, with LED, 2-wire, 3 metre, 5-30 V AC/DC	**P8SAGRFAX**	35	All Series
Electric Reed-NO, with LED, 2-wire, 10 metre, 5-230 V AC/DC	**P8SAGRFDX2**	105	All Series
Electric Reed-NC, No LED, 2-wire, 10 metre, 5-120 V AC/DC	**P8SAGEFRX1**	105	All Series
Electric Reed-NC, No LED, 2 wire, 10 metre, 5-30V AC/DC	**P8SSAGEFRX**	105	All Series
With flying leads, PVC cable IP67			
Electric Reed-NO, with LED, 3-wire, 3 metre, 5-30 V AC/DC	**P8SAGSFLX**	35	All Series
Electric Reed-NO, with LED, 2-wire, 3 metre, 5-120 V AC/DC	**P8SAGRFLX1**	35	All Series
Electric Reed-NO, with LED, 2-wire, 3 metre, 5-230 V AC/DC	**P8SAGRFLX2**	35	All Series
Electronic PNP-NC, with LED, 3-wire, 3 metre, 10-30 V DC	**P8SAGQFLX**	35	All Series
Electronic PNP-NO, with LED, 3-wire, 3 metre, 10-30 V DC	**P8SAGPFLX**	35	All Series
Electronic PNP-NO, with LED, 3-wire, 10 metre, 10-30 V DC	**P8SAGPFTX**	105	All Series
Electric Reed-NO, with LED, 2-wire, 10 metre, 5-120 V AC/DC	**P8SAGRFTX1**	105	All Series
Electric Reed-NO, with LED, 3-wire, 10 metre, 10-30 V AC/DC	**P8SAGSFTX**	105	All Series
With M8 knurled screw, PUR cable IP67			
Electronic PNP-NC, with LED, 3-wire, 0,3 metre, 10-30 V DC	**P8SAGQCHX**	15	All Series
Electronic PNP-NO, with LED, 3-wire, 0,3 metre, 10-30 V DC	**P8SAGPCHX**	15	All Series
Electronic NPN-NC, with LED, 3-wire, 0,3 metre, 10-30 V DC	**P8SAGMCHX**	15	All Series
Electronic NPN-NO, with LED, 3-wire, 0,3 metre, 10-30 V DC	**P8SAGNCHX**	15	All Series
Electric Reed-NO, with LED, 3-wire, 0,3 metre, 5-30 V AC/DC	**P8SAGSCHX**	15	All Series
Electric Reed-NC, No LED, 2-wire, 0,3 metre, 5-30 V AC/DC	**P8SAGECNX**	15	All Series
Electric Reed-NO, with LED, 2-wire, 0,3 metre, 5-30 V AC/DC	**P8SAGRCHX**	15	All Series
For ATEX IP67			
Electronic PNP-NO, with LED, 3-wire, 3 metre, 10-26 V DC, PUR	**P8SAGPFAXS**	35	ATEX Series 3G, 3D
NAMUR-NO, with LED, 2-wire, 5 metre, 8,2-20 V DC, PVC	**P8SAGDFMXW**	55	ATEX Series 1G, 1D
NAMUR-NO, with LED, 2-wire, 10 metre, 8,2-20 V DC, PVC	**P8SAGDFTXW**	105	ATEX Series 1G, 1D

Note:
-30 to +80 °C (PUR cable) I -30 to + 70 °C (PVC cable) I -25 to +80 °C (NAMUR 1GD I -20 to +50 °C (ATEX 3GD)
All sensors are with an adaptor for S-dovetail Parker type OSP grooves.
* with an aluminium adaptor

Male connectors for connecting cables

Cable connectors for producting your own connecting cables.
The conncectors can be quickly attached to the cable without special tools. Only the outer sheath of the cable is removed.
The connectors are available for M8 screw connector and meet protection class IP65.

Technical Data

Operating voltage:	max. 32 V AC/DC
Opertaing current per contact:	max. 4 A
Connection cross section:	0.25... 0.5 mm² (conductor diameter min 0.1 mm)
Protection class:	IP65 and IP67 when plugged and screwed down (EN 60529)
Temperature range:	- 25... + 85°C

Connector	Weight [kg]	**Order Code**
M8 screw connector		**P8CS0803J**
M12 screw connector	0.022	**P8CS1204J**



Cables to extend cable sensor lengths with M8*

Description	Order Code	Weight [g]	For Product Series
Cable flex PVC 3 metre with 8mm snap-in connector / flying leads	**9126344341**	70	P8S Sensors with M8
Cable flex PVC 10 metre with 8mm snap-in connector / flying leads	**9126344342**	210	P8S Sensors with M8
Cable PUR 3 metre with 8mm snap-in female connector / flying leads	**9126344345**	70	P8S Sensors with M8
Cable flex PUR 10 metre with 8mm snap-in connector / flying leads	**9126344346**	210	P8S Sensors with M8
Cable PVC 2.5 metre with M8 screw connector / flying leads	**KC3102**	60	P8S Sensors with knurled M8
Cable PVC 5 metre with M8 screw female connector / flying leads	**KC3104**	120	P8S Sensors with knurled M8

*Note: not applicable for P8S CPS Sensors as no cable available

Tel: +45 63 12 83 00 | Email: ps@hymatik.com | www.hymatik.com | Hvidkaervej 27a, DK-5250 Odense SV, Denmark

Specifying air quality (purity) in accordance with ISO8573-1:2010, the international standard for compressed air quality

ISO8573-1 is the primary document used from the ISO8573 series as it is this document which specifies the amount of contamination allowed in each cubic metre of compressed air.

ISO8573-1 lists the main contaminants as Solid Particulate, Water and Oil. The purity levels for each contaminant are shown separately in tabular form, however for ease of use, this document combines all three contaminants into one easy to use table.

ISO8573-1:2010 CLASS	Solid Particulate				Water		Oil
	Maximum number of particles per m^3			Mass Concentration mg/m^3	Vapour Pressure Dewpoint	Liquid g/m^3	Total Oil (aerosol liquid and vapour) mg/m^3
	0,1 - 0,5 micron	0,5 - 1 micron	1 - 5 micron				
0	As specified by the equipment user or supplier and more stringent than Class 1						
1	⩽ 20 000	⩽ 400	⩽ 10	-	⩽ -70 °C	-	0,01
2	⩽ 400 000	⩽ 6 000	⩽ 100	-	⩽ -40 °C	-	0,1
3	-	⩽ 90 000	⩽ 1 000	-	⩽ -20 °C	-	1
4	-	-	⩽ 10 000	-	⩽ +3 °C	-	5
5	-	-	⩽ 100 000	-	⩽ +7 °C	-	-
6	-	-	-	⩽ 5	⩽ +10 °C	-	-
7	-	-	-	5 - 10	-	⩽ 0,5	-
8	-	-	-	-	-	0,5 - 5	-
9	-	-	-	-	-	5 - 10	-
X	-	-	-	> 10	-	> 10	> 10

Specifying air purity in accordance with ISO8573-1:2010

When specifying the purity of air required, the standard must always be referenced, followed by the purity class selected for each contaminant (a different purity class can be selected for each contamination if required).
An example of how to write an air quality specification is shown below:

ISO 8573-1:2010 Class 1.2.1

ISO 8573-1:2010 refers to the standard document and its revision, the three digits refer to the purity classifications selected for solid particulate, water and total oil. Selecting an air purity class of 1.2.1 would specify the following air quality when operating at the standard's reference conditions:

Class 1 - Particulate

In each cubic metre of compressed air, the particulate count should not exceed 20,000 particles in the 0.1 - 0.5 micron size range, 400 particles in the 0.5 - 1 micron size range and 10 particles in the 1 - 5 micron size range.

Class 2 - Water

A pressure dewpoint (PDP) of -40°C or better is required and no liquid water is allowed.

Class 1 - Oil

In each cubic metre of compressed air, not more than 0.01mg of oil is allowed. This is a total level for liquid oil, oil aerosol and oil vapour.

ISO8573-1:2010 Class zero

- **Class 0 does not mean zero contamination.**
- **Class 0 requires the user and the equipment manufacturer to agree contamination levels as part of a written specification.**
- **The agreed contamination levels for a Class 0 specification should be within the measurement capabilities of the test equipment and test methods shown in ISO8573 Pt 2 to Pt 9.**
- **The agreed Class 0 specification must be written on all documentation to be in accordance with the standard.**
- **Stating Class 0 without the agreed specification is meaningless and not in accordance with the standard.**
- **A number of compressor manufacturers claim that the delivered air from their oil-free compressors is in compliance with Class 0.**
- **If the compressor was tested in clean room conditions, the contamination detected at the outlet will be minimal. Should the same compressor now be installed in typical urban environment, the level of contamination will be dependent upon what is drawn into the compressor intake, rendering the Class 0 claim invalid.**
- **A compressor delivering air to Class 0 will still require purification equipment in both the compressor room and at the point of use for the Class 0 purity to be maintained at the application.**
- **Air for critical applications such as breathing, medical, food, etc typically only requires air quality to Class 2.2.1 or Class 2.1.1.**
- **Purification of air to meet a Class 0 specification is only cost effective if carried out at the point of use.**

Notes

Tel: +45 63 12 83 00 | Email: ps@hymatik.com | www.hymatik.com | Hvidkaervej 27a, DK-5250 Odense SV, Denmark

Notes

Tel: +45 63 12 83 00 | Email: ps@hymatik.com | www.hymatik.com | Hvidkaervej 27a, DK-5250 Odense SV, Denmark

www.parker.com

European Headquarters
La Tuilière 6, 1163 Etoy,
Switzerland
Tel: +41 21 821 85 00

Your authorized Distributor

© 2023 Parker Hannifin Corporation. All rights reserved. Catalogue PDE2655TC/UK 09/2023