KH-B2V-S Ball valve with SAE Flange connection (block 3000/6000 PSI)

SAE Flange / Ball valve 2/2 way steel
(ISO 6162-1/-2)

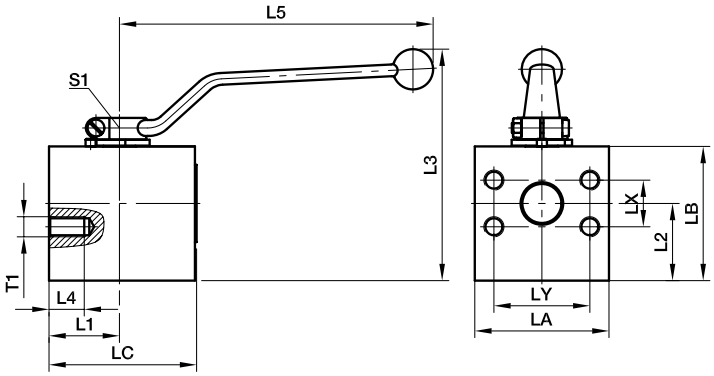

3000 PSI Series

Nom. flange size SAE (in)	ISO (DN)	T1 (metr.)	T1 (in)	L1	L2	L3	L4	L5	LX	LY	LA	LB	LC	S1	Weight (steel) kg/piece	Order code*	PN (bar)[1] S
1/2	12	**M 8**	**5/16-18 UNC**	23.5	22	97	17	112	17.5	38.1	55	45	60	10	1.1	**KH12B2V32**	210
3/4	20	**M10**	**3/8-16 UNC**	39.5	39	128	21	187	22.2	47.6	70	70	80	14	2.8	**KH20B2V33**	210
1	25	**M12**	**3/8-16 UNC**	42.0	46	138	19	187	26.2	52.4	80	80	88	14	4.0	**KH25B2V34**	210

6000 PSI Series

1/2	12	**M 8**	**5/16-18 UNC**	23.5	22	97	17	112	18.2	40.5	55	45	60	10	1.1	**KH12B2V62**	420
3/4	20	**M10**	**3/8-16 UNC**	39.5	39	128	21	187	23.8	50.8	70	70	80	14	2.8	**KH20B2V63**	420
1	25	**M12**	**7/16-16 UNC**	42.0	46	138	19	187	27.8	57.2	80	80	88	14	4.0	**KH25B2V64**	420

[1]) Pressure shown = Item deliverable

The pressure specification PN for quarter turn ball valves applies to the design factor 1.5 (according DIN 3230 T5 and ISO 5208).

$$\frac{\text{PN (bar)}}{10} = \text{PN (MPa)}$$

Materials:
Body made of steel, coating DIN 50938-FE/A/T4,
ball of hard chrome plated carbon steel, stem of zinc plated steel.

Seals:
Ball seat of POM (e.g. Delrin), stem seal of NBR (e.g. Perbunan).

Applications:
Suitable for petroleum-based hydraulic fluid, lubricants and fuel oil.
For air applications suitable up to 100 bar.

Temperature range:
–10 up to +100° C

Order code suffixes			
Material	Suffix surface and material	Example	Standard sealing material (no additional suffix needed)
Steel, zinc plated, Cr(VI)-free	CF	KH12B2V32CFX	POM / NBR
Steel	DIN 50938-FE//A/T4	KH12B2V32X	POM / NBR

Tel: +45 63 12 83 00 | Email: ps@hymatik.com | www.hymatik.com | Hvidkaervej 27a, DK-5250 Odense SV, Denmark