

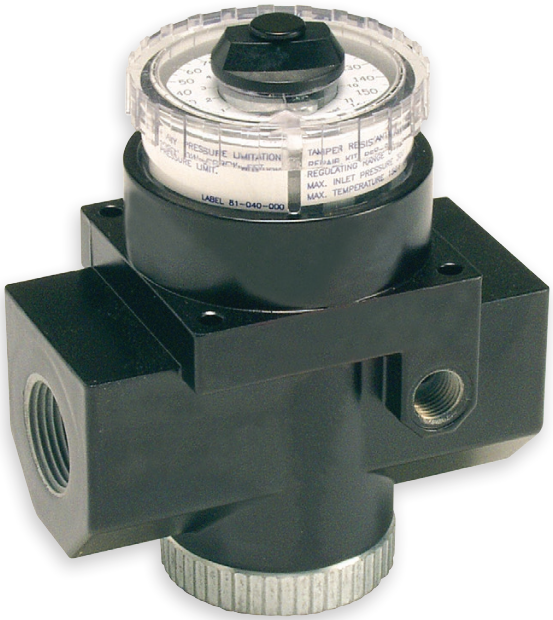

AIR PREPARATION SYSTEM
DIAL AIR REGULATORS

1/4 to 2 Body Ported

Tel: +45 63 12 83 00 | Email: ps@hymatik.com | www.hymatik.com | Hvidkaervej 27a, DK-5250 Odense SV, Denmark

WARNING — USER RESPONSIBILITY

FAILURE OR IMPROPER SELECTION OR IMPROPER USE OF THE PRODUCTS DESCRIBED HEREIN OR RELATED ITEMS CAN CAUSE DEATH, PERSONAL INJURY AND PROPERTY DAMAGE.

- This document and other information from Parker-Hannifin Corporation, its subsidiaries and authorized distributors provide product or system options for further investigation by users having technical expertise.
- The user, through its own analysis and testing, is solely responsible for making the final selection of the system and components and assuring that all performance, endurance, maintenance, safety and warning requirements of the application are met. The user must analyze all aspects of the application, follow applicable industry standards, and follow the information concerning the product in the current product catalog and in any other materials provided from Parker or its subsidiaries or authorized distributors.
- To the extent that Parker or its subsidiaries or authorized distributors provide component or system options based upon data or specifications provided by the user, the user is responsible for determining that such data and specifications are suitable and sufficient for all applications and reasonably foreseeable uses of the components or systems.

SALE CONDITIONS

The items described in this document are available for sale by Parker Hannifin Corporation, its subsidiaries or its authorized distributors. Any sale contract entered into by Parker will be governed by the provisions stated in Parker's standard terms and conditions of sale (copy available upon request).

Dial Air Regulators Principle 4-5

Dial Air Regulators
- 51R - 1/4 6-7
- 52R - 1/4 to 3/4 8-9
- 53R - 3/4 to 1-1/4 10-11
- 54R - 1-1/2 to 2 12-13

Parker Hannifin Corporation
Electric Motion and Pneumatic Division - Europe

Tel: +45 63 12 83 00 | Email: ps@hymatik.com | www.hymatik.com | Hvidkaervej 27a, DK-5250 Odense SV, Denmark

Dial-Air™ Pilot

The Dial-Air™ Pilot is a constant bleed, piston operated regulator. The pilot controlled pressure reducing valve provides exceptionally high air flow with steady pressure control and minimal secondary pressure drop.
The non-rising adjustment knob provides quick selection of the desired secondary pressure in less than one full turn. The adjustment knob also can serve as the pressure indicator thereby eliminating the need for a pressure gauge.

This regulator is specifically designed for applications requiring more accurate air circuit control, high air flow capacity with flat performance curves and quick regulator adjustment. The regulator can be used as a conventional regulator for standard air circuits or as a pilot regulator to provide pressure to the control chamber of a pilot operated (slave) regulator.

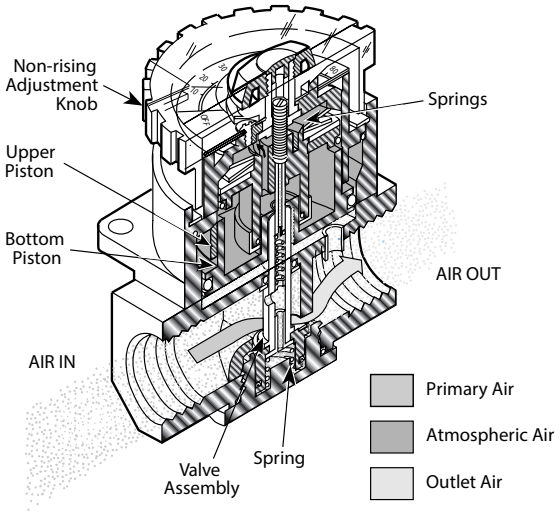

Operation

To set the regulator, turn the large dial adjustment knob to the desired secondary set pressure. This opens the pilot valve seat allowing air flow into the control chamber which forces the lower piston downward against the relief seat and opens the main valve. At the same time, the air in the control chamber forces the upper piston upward against Belleville springs which closes the pilot valve seat when the set pressure is attained. Secondary pressure in the chamber is now balanced against the control pressure through the lower piston. If demand flow increases, the constant control pressure will force the lower piston and the main valve further downward, and allow more flow downstream. A higher than desired secondary pressure will force the lower piston upward, closing the main valve seat and opening the main relief valve seat thereby allowing air to relieve to the atmosphere. For best performance, regulated pressure should always be set by increasing the pressure up to the desired setting.

Principal Regulator (Remote Operated)

Remote-control Dial-Air™ Regulator

Incorporates all the features of the standard Dial-Air™ Regulator plus the additional advantage of remote installation using the 51R model Pilot Regulator. Maximum inlet operating pressure and temperature ratings are 20,7 bar (300 psig) and 65,5°C (150°F).

The Remote-control Dial-Air™ Regulators are available in five pipe sizes, with 1/4" NPT connections on the pilot regulator and pilot port of remote-controlled regulators. Typical installation is shown below. For other remote models, see 52R, 53R & 54R.

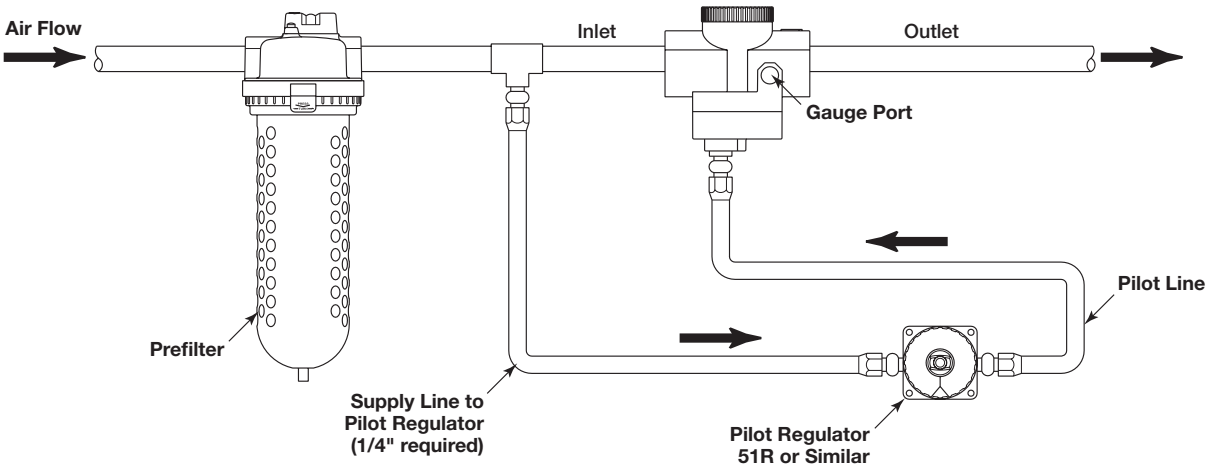

Dial-Air™

Dial-Air™ regulators feature a transparent, pressure-calibrated, non-rising adjustment dial for quick adjustment of secondary pressure. If a gauge (52R, 53R, 54R) is required for monitoring reasons, two 1/4" gauge ports are provided; however, these are usually used for additional outlet ports. The full reduced pressure range can be dialed in less than 270° of dial rotation. This feature is particularly advantageous if secondary pressure must be changed frequently. The transparent dial can be color or graphics coded for easy reference to required pressure changes. Dial-Air™ regulators can be mounted in any position so dial face is always visible. All Dial-Air™ units have a slight constant air bleed: 0.024 dm^3/s (0.05 scfm), @ 7 bar (100 psig) inlet and 6,2 bar (90 psig) outlet.

Tel: +45 63 12 83 00 | Email: ps@hymatik.com | www.hymatik.com | Hvidkaervej 27a, DK-5250 Odense SV, Denmark

Dial Air Regulators - 51R



Symbols

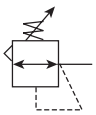

- Pressure reference indicating dial face
- Non-rising, pressure-adjustment dial
- Self-relieving
- Full pressure adjustment in less than one full turn
- Recommended for pilot-air applications
- Constant bleed, piston operated
- 1/4" port (BSPP, NPT)

Order Code for Ordering:

BSPP Port size	Description	Flow ‡ dm³/s (scfm)	Max. bar (psig)	Height mm (inches)	Width mm (inches)	Depth mm (inches)	Weight kg (lb)	Part number
1/4"	Standard pressure 0 to 11 bar (5 to 160 psig)	0,3 (0.7)	11 (160)	71,4 (2.8)	66 (2.6)	66 (2.6)	0,5 (1.3)	**51R126RA1**
1/4"	Low pressure 0 to 2.8 bar (2 to 40 psig)	0,3 (0.7)	3,0 (40)	71,4 (2.8)	66 (2.6)	66 (2.6)	0,5 (1.3)	**51R125RA1**

‡ dm³/s (scfm) = Standard cubic feet per minute at 7 bar (100 psig) inlet, secondary pressure 6 bar (90 psig).

Options:

51R **1** [ ] **R** **A** **1**

Port	
1/4 inch	1

Pressure Range	
0,14 to 3 bar (2 to 40 psig)	25
0,34 to 11 bar (5 to 160 psig)	26

Thread Type	
Blank	NPT
1	BSPP

Engineering Level	
A	Current

Relief	
R	Relieving

Standard order code shown in bold.

⚠ WARNING

Product rupture can cause serious injury.
Do not connect regulator to bottled gas.
Do not exceed Maximum primary pressure rating.

Tel: +45 63 12 83 00 | Email: ps@hymatik.com | www.hymatik.com | Hvidkaervej 27a, DK-5250 Odense SV, Denmark

Specifications

Flow capacity‡	0,3 dm^3/s ANR (0.7 scfm)
Operating temperature	0°C to 65,6°C (32°F to 150°F)
Adjusting pressure range	0,14 to 3 bar (2 to 40 psig) 0,34 to 11 bar (5 to 160 psig)
Max supply pressure	20,7 bar (300 psig)
Bleed rate	0,02 dm^3/s ANR (0.05 scfm)
Port size	1/4
Weight	0.5 kg (1.3 lb)

‡ dm^3/s (scfm) = Standard cubic feet per minute at 7 bar (100 psig) inlet, secondary pressure 6,2 bar (90 psig).

Material Specifications

Body	Zinc
Bonnet	Zinc / brass
Piston	Acetal
Seals	Nitrile
Springs	Steel
Valve assembly	Brass / nitrile / acetal

Repair and Service Kits

Adjustment dial knob	**RRP-16-024**
O-ring, repair kit	**GRP-95-260**
Piston and bonnet repair kit	**RRP-95-765**
Spring, regulation, belleville washer, 0,14 to 3 bar (2 to 40 psig)	**RRP-95-906**
Spring, regulation, belleville washer, 0,34 to 11 bar (5 to 160 psig)	**RRP-95-905**
Tamper resistant kit	**RRP-95-585**
Valve, pilot with o-ring and valve spring	**RRP-96-934**

Dimensions mm (inches)

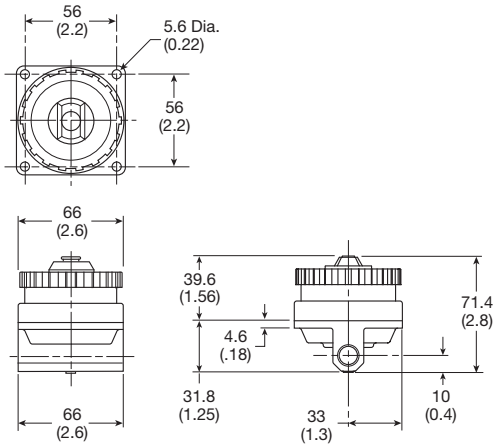

Flow Charts

51R 1/4" Regulator

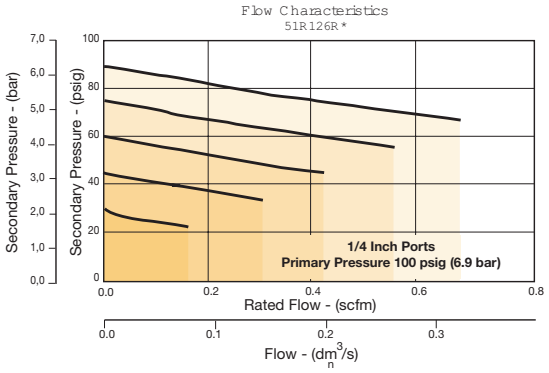

Tel: +45 63 12 83 00 | Email: ps@hymatik.com | www.hymatik.com | Hvidkaervej 27a, DK-5250 Odense SV, Denmark

Dial Air Regulators - 52R



Symbols

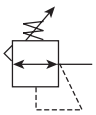

- Balanced poppet design
- Non-rising, pressure-adjusting dial
- High-relief flow (3/16" relief orifice)
- Two 1/4" gauge ports
- Constant bleed, piston operated
- 1/4", 3/8", 1/2", 3/4" ports (BSPP, NPT)

Order Code for Ordering:

BSPP Port size	Description	Flow ‡ dm³/s (scfm)	Max. bar (psig)	Height mm (inches)	Width mm (inches)	Depth mm (inches)	Weight kg (lb)	Part number
1/4"	Standard pressure 0,34 to 11 bar (5 to 160 psig)	55,2 (117)	20,7 (300)	104 (4.1)	81 (3.2)	81 (3.2)	1.04 (2.3)	**52R126RA1**
1/4"	Low pressure 0,14 to 3 bar (2 to 40 psig)	55,2 (117)	20,7 (300)	104 (4.1)	81 (3.2)	81 (3.2)	1.04 (2.3)	**52R125RA1**
3/8"	Standard pressure 0,34 to 11 bar (5 to 160 psig)	85 (180)	20,7 (300)	104 (4.1)	81 (3.2)	81 (3.2)	1.04 (2.3)	**52R226RA1**
3/8"	Low pressure 0,14 to 3 bar (2 to 40 psig)	85 (180)	20,7 (300)	104 (4.1)	81 (3.2)	81 (3.2)	1.04 (2.3)	**52R225RA1**
1/2"	Standard pressure 0,34 to 11 bar (5 to 160 psig)	92 (195)	20,7 (300)	104 (4.1)	81 (3.2)	81 (3.2)	1.04 (2.3)	**52R326RA1**
1/2"	Low pressure 0,14 to 3 bar (2 to 40 psig)	92 (195)	20,7 (300)	104 (4.1)	81 (3.2)	81 (3.2)	1.04 (2.3)	**52R325RA1**
3/4"	Standard pressure 0,34 to 11 bar (5 to 160 psig)	103,8 (220)	20,7 (300)	104 (4.1)	81 (3.2)	81 (3.2)	1.04 (2.3)	**52R426RA1**
3/4"	Low pressure 2 to 40 psig (0,14 to 3 bar)	103,8 (220)	20,7 (300)	104 (4.1)	81 (3.2)	81 (3.2)	1.04 (2.3)	**52R425RA1**

‡ dm³/s (scfm) = Standard cubic feet per minute at 7 bar (100 psig) inlet, secondary pressure 5,5 bar (80 psig).

Options:

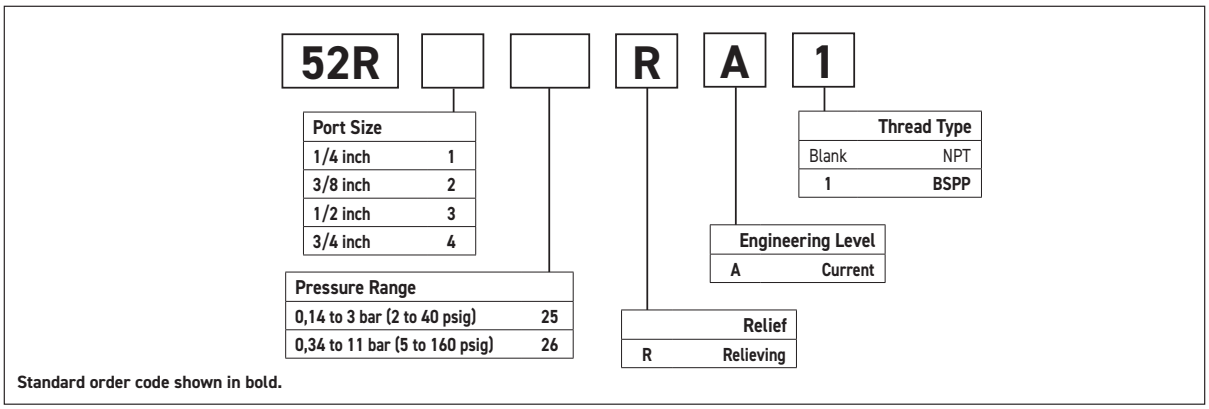

Standard order code shown in bold.

⚠ WARNING

Product rupture can cause serious injury.
Do not connect regulator to bottled gas.
Do not exceed Maximum primary pressure rating.

Tel: +45 63 12 83 00 | Email: ps@hymatik.com | www.hymatik.com | Hvidkaervej 27a, DK-5250 Odense SV, Denmark

Specifications

Flow capacity ‡	1/4"	55,2 dm^3/s ANR (117 scfm)
	3/8"	85 dm^3/s ANR (180 scfm)
	1/2"	92 dm^3/s ANR (195 scfm)
	3/4"	103,8 dm^3/s ANR (220 scfm)
Operating temperature		0°C to 65,6°C (32°F to 150°F)
Adjusting pressure range		0 to 2.8 bar (2 to 40 psig) 0 to 11 bar (5 to 160 psig)
Max supply pressure		20,7 bar (300 psig)
Bleed rate		0,02 dm^3/s ANR (0.05 scfm)
Gauge ports (2) ◊		1/4
Port size		1/4", 3/8", 1/2", 3/4"
Weight		1.04 kg (2.3 lb)

‡ dm^3/s (scfm) = Standard cubic feet per minute at 7 bar (100 psig) inlet, secondary pressure 6 bar (90 psig).

◊ Ports can be used as additional high flow 1/4" outlet ports

Material specifications

Body	Zinc
Bonnet	Zinc / brass
Piston	Acetal
Seals	Nitrile
Springs	Steel
Valve assembly	Brass / nitrile / acetal

Repair and Service Kits

Adjustment dial knob	**RRP-16-024**
O-ring, repair kit	**GRP-95-260**
Piston bottom and o-ring seal	**RRP-95-192**
Pistons and bonnet repair kit	**RRP-95-766**
Spring, regulation, belleville washer – 0,14 to 3 bar (2 to 40 psig)	**RRP-95-906**
Spring, regulation, belleville washer – 0,34 to 11 bar (5 to 160 psig)	**RRP-95-905**
Tamper resistant kit	**RRP-95-585**
Valve, main with U-cup seal & bottom plug	**RRP-95-914**
Valve, main with U-cup seal	**RRP-95-151**
Valve, pilot with o-ring and valve spring	**RRP-96-934**

Dimensions mm (inches)

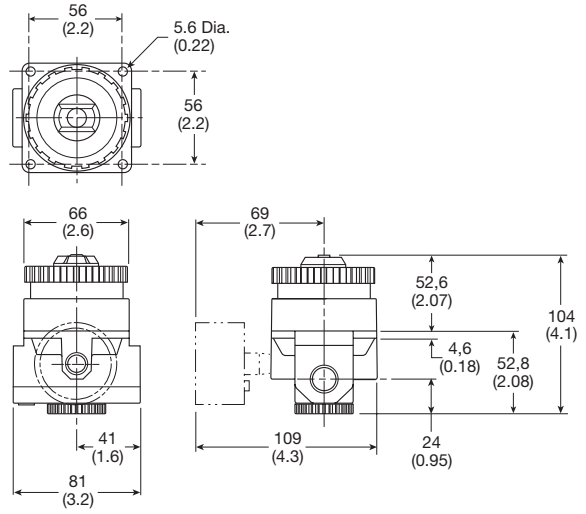

Flow Charts

52R 1/4" Regulator

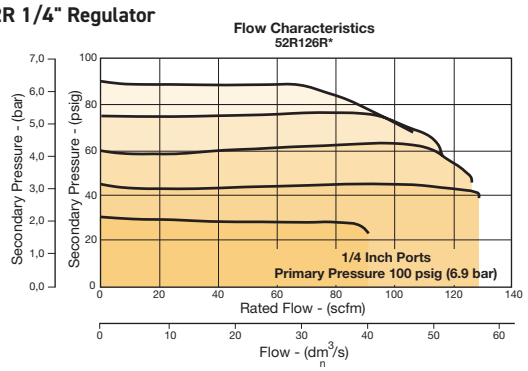

52R 3/8" Regulator

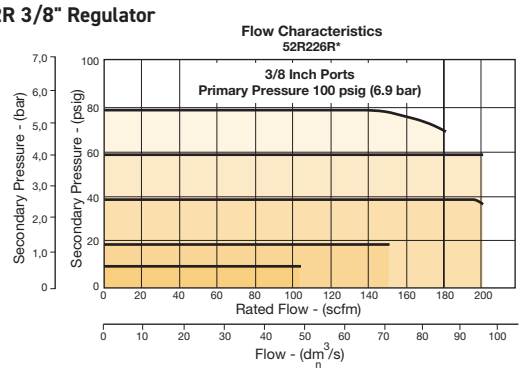

52R 1/2" Regulator

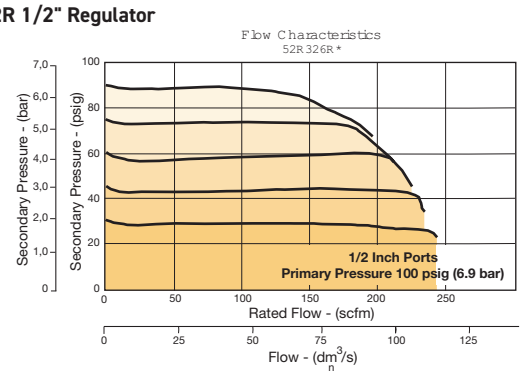

52R 3/4" Regulator

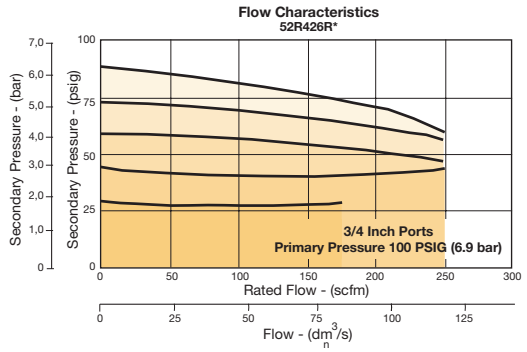

Tel: +45 63 12 83 00 | Email: ps@hymatik.com | www.hymatik.com | Hvidkaervej 27a, DK-5250 Odense SV, Denmark

Dial Air Regulators - 53R



Symbols

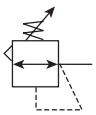

- Balanced poppet design
- Non-rising, pressure-adjusting dial
- High-relief flow (3/16" relief orifice)
- Two 1/4" gauge ports
- Constant bleed, piston operated
- 3/4", 1", 1-1/4" ports (BSPP, NPT)

Order Code for Ordering:

BSPP Port size	Description	Flow ‡ dm³/s (scfm)	Max. bar (psig)	Height mm (inches)	Width mm (inches)	Depth mm (inches)	Weight kg (lb)	Part number
3/4"	Standard pressure 0,34 to 11 bar (5 to 160 psig)	188,8 (400)	20,7 (300)	132 (5.2)	109 (4.3)	109 (4.3)	2,1 (4.7)	**53R426RA1**
3/4"	Low pressure 0,14 to 3 bar (2 to 40 psig)	188,8 (400)	20,7 (300)	132 (5.2)	109 (4.3)	109 (4.3)	2,1 (4.7)	**53R425RA1**
1"	Standard pressure 0,34 to 11 bar (5 to 160 psig)	306,8 (650)	20,7 (300)	132 (5.2)	109 (4.3)	109 (4.3)	2,1 (4.7)	**53R526RA1**
1"	Low pressure 0,14 to 3 bar (2 to 40 psig)	306,8 (650)	20,7 (300)	132 (5.2)	109 (4.3)	109 (4.3)	2,1 (4.7)	**53R525RA1**
1-1/4"	Standard pressure 0,34 to 11 bar (5 to 160 psig)	330,4 (700)	20,7 (300)	132 (5.2)	109 (4.3)	109 (4.3)	2,1 (4.7)	**53R626RA1**
1-1/4"	Low pressure 0,14 to 3 bar (2 to 40 psig)	330,4 (700)	20,7 (300)	132 (5.2)	109 (4.3)	109 (4.3)	2,1 (4.7)	**53R625RA1**

‡ dm³/s (scfm) = Standard cubic feet per minute at 7 bar (100 psig) inlet, secondary pressure 5,5 bar (80 psig).

Options:

53R [ ] [ ] **R** **A** **1**

Port Size	
3/4 inch	4
1 inch	5
1-1/4 inch	6

Pressure Range	
0,14 to 3 bar (2 to 40 psig)	25
0,34 to 11 bar (5 to 160 psig)	26

Thread Type	
Blank	NPT
1	BSPP

Engineering Level	
A	Current

Relief	
R	Relieving

Standard order code shown in bold.

⚠ WARNING

Product rupture can cause serious injury.
Do not connect regulator to bottled gas.
Do not exceed Maximum primary pressure rating.

Tel: +45 63 12 83 00 | Email: ps@hymatik.com | www.hymatik.com | Hvidkaervej 27a, DK-5250 Odense SV, Denmark

Specifications

Flow capacity ‡	3/4" 1" 1-1/4"	188,8 dm^3/s ANR (400 scfm) 306,8 dm^3/s ANR (650 scfm) 330,4 dm^3/s ANR (700 scfm)
Operating temperature		0°C to 65,6°C (32°F to 150°F)
Adjusting pressure range		0,14 to 3 bar (2 to 40 psig) 0,34 to 11 bar (5 to 160 psig)
Max supply pressure		20,7 bar (300 psig)
Bleed rate		0,02 dm^3/s ANR (0.05 scfm)
Gauge ports (2) ◊		1/4
Port size		3/4", 1", 1-1/4"
Weight		2,1 kg (4.7 lb)

‡ dm^3/s (scfm) = Standard cubic feet per minute at 7 bar (100 psig) inlet, secondary pressure 6 bar (90 psig).

◊ Ports can be used as additional high flow 1/4" outlet ports

Material Specifications

Body	Zinc
Bonnet	Zinc / brass
Piston	Acetal
Seals	Nitrile
Springs	Steel
Valve assembly	Brass / nitrile / acetal

Repair and Service Kits

Adjustment dial knob	**RRP-16-024**
O-ring, repair kit	**GRP-95-261**
Piston, bottom and o-ring seal	**RRP-95-192**
Pistons and bonnet repair kit	**RRP-95-766**
Spring, regulation, belleville washer – 0,14 to 3 bar (2 to 40 psig) range	**RRP-95-906**
Spring, regulation, belleville washer – 0,34 to 11 bar (5 to 160 psig) range	**RRP-95-905**
Tamper resistant kit	**RRP-95-585**
Valve, main with o-ring seal	**RRP-95-152**
Valve, pilot with o-ring and valve spring	**RRP-96-935**

Dimensions mm (inches)

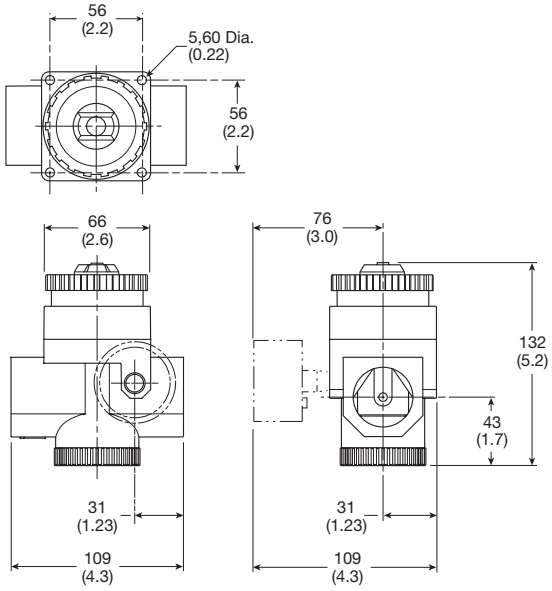

Flow Charts

53R 3/4" Regulator

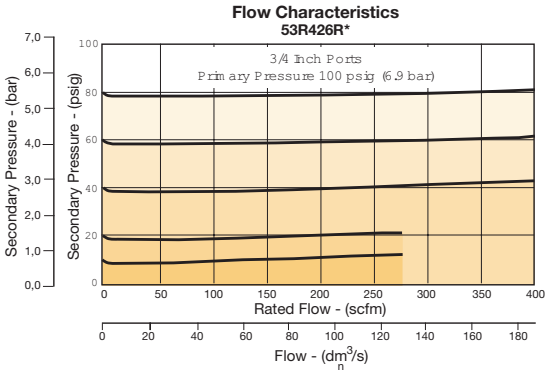

53R 1" Regulator

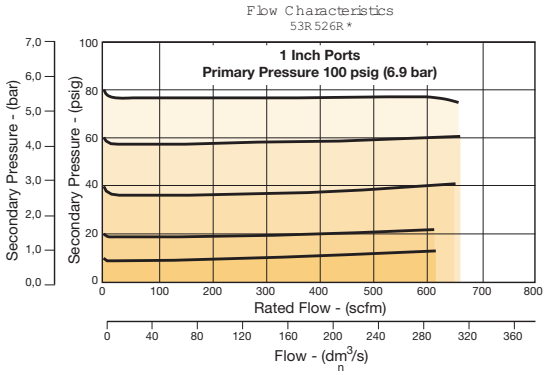

53R 31-14" Regulator

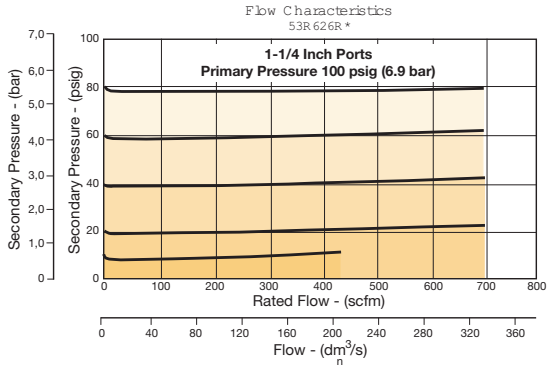

Tel: +45 63 12 83 00 | Email: ps@hymatik.com | www.hymatik.com | Hvidkaervej 27a, DK-5250 Odense SV, Denmark

Dial Air Regulators - 54R



Symbols

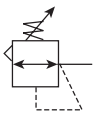

- Balanced poppet design
- Non-rising, pressure-adjusting dial
- High-relief flow (3/16" relief orifice)
- Two 1/4" gauge ports
- Constant bleed, piston operated
- 1-1/2", 2" ports (BSPP, NPT)

Order Code for Ordering:

BSPP Port size	Description	Flow ‡ dm³/s (scfm)	Max. bar (psig)	Height mm (inches)	Width mm (inches)	Depth mm (inches)	Weight kg (lb)	Part number
1-1/2"	Standard pressure 0,34 to 11 bar (5 to 160 psig)	755 (1,600)	20,7 (300)	173 (6.8)	135 (5.3)	135 (5.3)	4,1 (9)	**54R726RA1**
1-1/2"	Low pressure 0,14 to 3 bar (2 to 40 psig)	755 (1,600)	20,7 (300)	173 (6.8)	135 (5.3)	135 (5.3)	4,1 (9)	**54R725RA1**
2"	Standard pressure 0,34 to 11 bar (5 to 160 psig)	755 (1,600)	20,7 (300)	173 (6.8)	135 (5.3)	135 (5.3)	4,1 (9)	**54R826RA1**
2"	Low pressure 0,14 to 3 bar (2 to 40 psig)	755 (1,600)	20,7 (300)	173 (6.8)	135 (5.3)	135 (5.3)	4,1 (9)	**54R825RA1**

‡ dm³/s (scfm) = Standard cubic feet per minute at 7 bar (100 psig) inlet, secondary pressure 5,5 bar (80 psig).

Options:

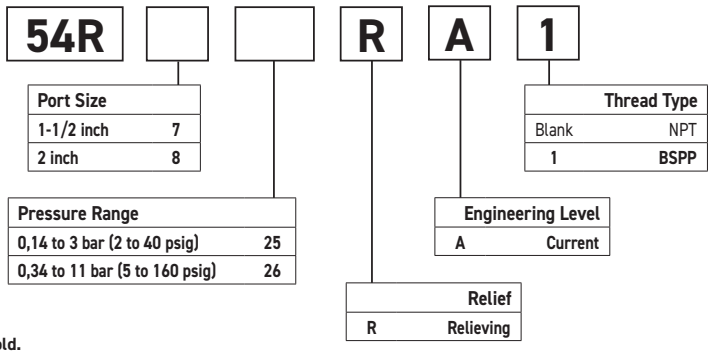

Standard order code shown in bold.

⚠ WARNING

Product rupture can cause serious injury.
Do not connect regulator to bottled gas.
Do not exceed Maximum primary pressure rating.

Parker Hannifin Corporation
Electric Motion and Pneumatic Division - Europe

Tel: +45 63 12 83 00 | Email: ps@hymatik.com | www.hymatik.com | Hvidkaervej 27a, DK-5250 Odense SV, Denmark

Specifications

Flow capacity ‡	1-1/2" 2"	755 dm³/s ANR (1,600 scfm) 755 dm³/s ANR (1,600 scfm)
Operating temperature		0°C to 65,6°C (32°F to 150°F)
Adjusting pressure range		0,14 to 3 bar (2 to 40 psig) 0,34 to 11 bar (5 to 160 psig)
Max supply pressure		20,7 bar (300 psig)
Bleed rate		0,02 dm³/s ANR (0.05 scfm)
Gauge ports (2) ◊		1/4
Port size		1-1/2", 2"
Weight		4,1 kg (9 lb)

‡ dm³/s (scfm) = Standard cubic feet per minute at 7 bar (100 psig) inlet, secondary pressure 6 bar (90 psig).

◊ Ports can be used as additional high flow 1/4" outlet ports

Material Specifications

Body	Zinc
Bonnet	Zinc / brass
Piston	Zinc
Seals	Nitrile
Springs	Steel
Valve assembly	Brass / nitrile / acetal

Repair and Service Kits

Adjustment dial knob	**RRP-16-024**
O-ring, repair kit	**GRP-95-262**
Piston, bottom and o-ring seal	**RRP-95-192**
Pistons and bonnet repair kit	**RRP-95-766**
Spring, regulation, belleville washer – 0,14 to 3 bar (2 to 40 psig)	**RRP-95-906**
Spring, regulation, belleville washer – 0,34 to 11 bar (5 to 160 psig) range	**RRP-95-905**
Spring, main valve	**RRP-95-024**
Tamper resistant kit	**RRP-95-585**
Valve, main with o-ring seal	**RRP-95-153**
Valve, pilot with o-ring and valve spring	**RRP-96-935**

Dimensions mm (inches)

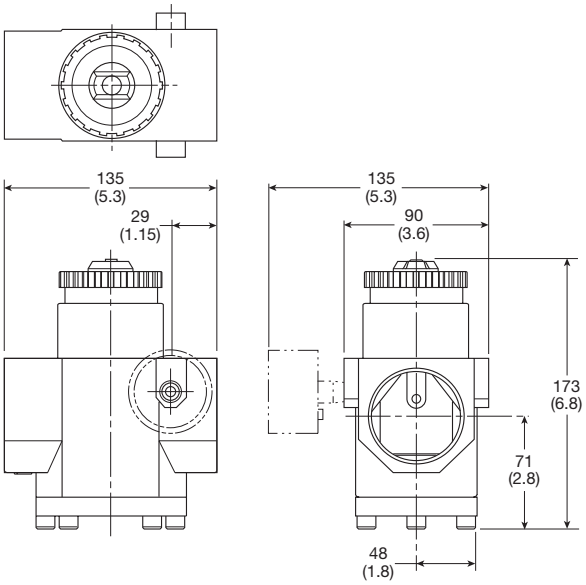

Flow Charts

54R 1-1/2" Regulator

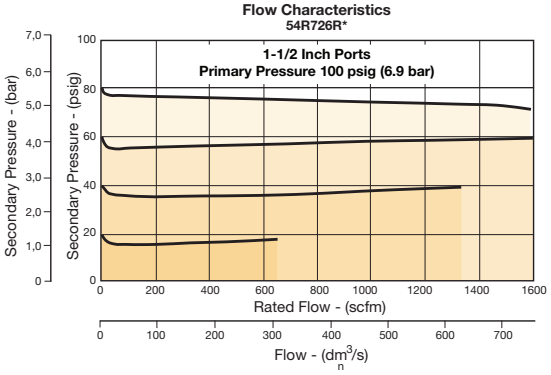

54R 2" Regulator

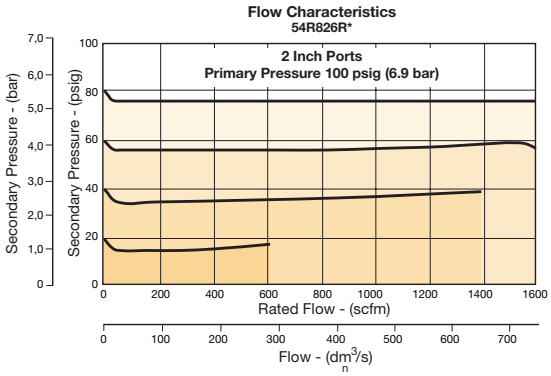

Tel: +45 63 12 83 00 | Email: ps@hymatik.com | www.hymatik.com | Hvidkaervej 27a, DK-5250 Odense SV, Denmark

Notes

Parker Hannifin Corporation
Electric Motion and Pneumatic Division - Europe

Tel: +45 63 12 83 00 | Email: ps@hymatik.com | www.hymatik.com | Hvidkaervej 27a, DK-5250 Odense SV, Denmark

Notes

Tel: +45 63 12 83 00 | Email: ps@hymatik.com | www.hymatik.com | Hvidkaervej 27a, DK-5250 Odense SV, Denmark

Parker Hannifin Corporation
Electric Motion and Pneumatic Division Europe
Robert-Bosch-Strasse 22
77656 Offenburg
Germany
www.parker.com

PNDE3001TCUK 03/2024

Your Local Authorized Parker Distributor

© 2024 Parker Hannifin Corporation