





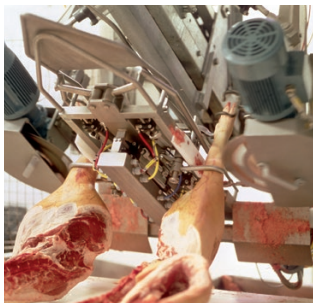



Pneumatic Cylinders

Ø10 to Ø63 mm P1S Series
According to ISO 6432 - 6431

PDE2535TCUK



Parker

ENGINEERING YOUR SUCCESS.

Important
Before attempting any external or internal work on the cylinder or any connected components, make sure the cylinder is vented and disconnect the air supply in order to ensure isolation of the air supply.

Note
All technical data in this catalogue are typical data only.
Air quality is essential for maximum cylinder service life (see ISO 8573).

WARNING

FAILURE OR IMPROPER SELECTION OR IMPROPER USE OF THE PRODUCTS AND/OR SYSTEMS DESCRIBED HEREIN OR RELATED ITEMS CAN CAUSE DEATH, PERSONAL INJURY AND PROPERTY DAMAGE.

This document and other information from Parker Hannifin Corporation, its subsidiaries and authorized distributors provide product and/or system options for further investigation by users having technical expertise. It is important that you analyze all aspects of your application and review the information concerning the product or system in the current product catalog. Due to the variety of operating conditions and applications for these products or systems, the user, through its own analysis and testing, is solely responsible for making the final selection of the products and systems and assuring that all performance, safety and warning requirements of the application are met. The products described herein, including without limitation, product features, specifications, designs, availability and pricing, are subject to change by Parker Hannifin Corporation and its subsidiaries at any time without notice.

SALE CONDITIONS

The items described in this document are available for sale by Parker Hannifin Corporation, its subsidiaries or its authorized distributors. Any sale contract entered into by Parker will be governed by the provisions stated in Parker's standard terms and conditions of sale (copy available upon request).

Tel: +45 63 12 83 00 | Email: ps@hymatik.com | www.hymatik.com | Hvidkaervej 27a, DK-5250 Odense SV, Denmark

Contents ..... Page

Stainless steel cylinders ..... 4 – 5
P1S-S, ISO 6432, Ø10-Ø25 ..... 6 – 13
Cylinder forces 6
Main data 7
Cushioning diagram 8
Material specification 8
Dimensions 9
Order key 10
Stroke length 10
Mountings ..... 11 – 13
P1S- ISO 6431, Ø32-Ø63 ..... 15 – 23
Cylinder forces 15
Main data 15
Cushioning diagram 15
Dimensions Ø32-Ø63 16
Material specification Ø32-Ø63 16
Order key 17
Stroke length 17
Mountings ..... 18 – 19
Seal kits 20
Sensors ..... 21 – 26
Specifying air quality (purity) 27

P1S Series Stainless Steel Pneumatic Cylinders

Smooth exterior design.

White food-adapted grease.

Magnetic piston as standard.

Installation dimensions according to ISO 6431/6432

External seals of fluorocarbon rubber

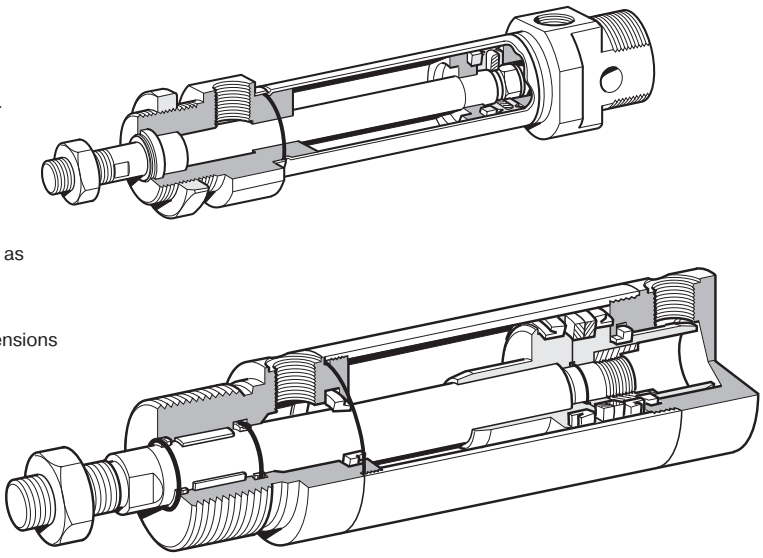

Ø10-Ø25, ISO 6432

Fixed end-cushioning for the Ø10-Ø25. Adjustable pneumatic cushioning for the Ø20-Ø25.

Ø32-Ø63, ISO 6431

Adjustable pneumatic cushioning for the Ø32-Ø63. Mechanically secured cushioning screws.

Stainless steel cylinders

Parker Pneumatic's range of stainless steel cylinders has been specially designed for use in difficult environments. Smooth design, external seals of fluorianted rubber and prelubrication with our food-industry-approved grease according to USDA-H1 make the cylinders particularly suitable for food industry use.
All cylinders have magnetic pistons for proximity position sensing. Fixing dimensions to ISO 6431/6432 simplify installation and make the cylinders physically interchangeable throughout the world.

ISO 6432

The cylinders are available in two versions. One with fixed end-cushioning and is available in 10, 12, 16, 20 and 25 mm diameters. A single-acting version with spring return in the negative direction, is available in the same diameters.

One version has adjustable pneumatic end-cushioning and is available in 20 and 25 mm diameters.

ISO 6431

The ISO cylinders are double-acting round cylinders with several types of cylinder mountings as standard. The cylinders are available in 32 to 63 mm diameters, incorporating adjustable end-cushioning. As with the ISO 6432 it is designed to comply with hygiene requirements in accordance with the EU Machine Directive.

The cylinder can be dismantled to facilitate service and maintenance.

P1S Series Stainless Steel Pneumatic Cylinders

Stainless steel construction
The cylinders are made for use in particularly demanding environments. The piston rod, cylinder tube and end covers are all of stainless steel.

Effective end-cushioning
A version of ISO 6432 Ø10 – Ø25 incorporates fixed end-cushioning, while the cylinders Ø20 – Ø63 have pneumatic end-cushioning with adjusting screws for exact setting, permitting heavier loads and higher speeds for short cycle times.

Smooth external design
The end covers have no recesses or other grooves that could collect dirt or liquid. Cleaning is easy and effective.

Dry operation
Particular attention has been paid to the design of the cylinders' scraper rings, piston rod bearings and piston rod seals. Self-lubricating materials permit regular washing/degreasing of the piston rod. This is important in applications where hygiene and cleaning must be of high standard.

Proximity position sensing
All cylinders in normal temperature design are fitted with a magnet for proximity position sensing. Electronic type sensors and reed switches are available. They are supplied with either flying lead or cable plug connector.

Complete range of mountings
A complete range of stainless steel mounting accessories with ISO dimensions is available.

Variants
In addition to the basic design, several standard variants of these stainless steel cylinders are available to fulfill more demanding requirements in terms of performance and environmental conditions:

- Cylinders with special stroke lengths
- Cylinders with extended piston rods
- Single-acting cylinders (Ø10 – Ø25)
- High-temperature versions for operation in temperature range:
  - Ø10 to Ø16 mm from -10 °C to +120 °C (not magnetic piston)
  - Ø20 to Ø63 mm from -10 °C to +150 °C (not magnetic piston)



Double acting Ø10-Ø25, fixed end-cushioning



Double acting Ø20-Ø25, adjustable end-cushioning



Double acting Ø10-Ø25, through piston rod



Single acting Ø10-Ø25



Double acting Ø32-Ø63

P1S Series Stainless Steel Pneumatic Cylinders

Cylinder forces, double acting variants

Cyl. bore/ pist. rod mm	Stroke	Piston area cm²	Max theoretical force in N (bar) 1.0	2.0	3.0	4.0	5.0	6.0	7.0	8.0	9.0	10.0
10/4	+	0.8	8	16	24	31	39	**47**	55	63	71	79
	-	0.7	7	13	20	26	33	**40**	46	53	59	66
12/6	+	1.1	11	23	34	45	57	**68**	79	90	102	113
	-	0.8	8	17	25	34	42	**51**	59	68	76	85
16/6	+	2.0	20	40	60	80	100	**120**	141	161	181	201
	-	1.7	17	35	52	69	86	**104**	121	138	156	173
20/8	+	3.1	31	63	94	126	157	**188**	220	251	283	314
	-	2.6	26	53	79	106	132	**158**	185	211	238	264
25/10	+	4.9	49	98	147	196	245	**295**	344	393	442	491
	-	4.1	41	82	124	165	206	**247**	289	330	371	412

+ = Outward stroke
- = Return stroke

Note!
Select a theoretical force 50-100% larger than the force required

Cylinder forces single acting variants

Indicated cylinder forces are theoretical and should be reduced according to the working conditions.

Order code	Theoretical piston force at 6 bar			
			Spring retraction	
	Nmax	Nmin	Nmax	Nmin
Single acting. spring return				
P1S-S010SS-0010	38	36	10	8.5
P1S-S010SS-0015	38	36	10	7.8
P1S-S010SS-0025	39	36	10	6.6
P1S-S010SS-0040	38	34	13	9
P1S-S010SS-0050	39	34	13	8
P1S-S010SS-0080	39	34	12	7
P1S-S012SS-0010	53	51	16	14.4
P1S-S012SS-0015	53	51	16	13.6
P1S-S012SS-0025	55	51	16	12
P1S-S012SS-0040	52	48	19	13.4
P1S-S012SS-0050	53	48	19	12
P1S-S012SS-0080	55	48	21.4	12
P1S-S016SS-0010	102	99	22.3	20.2
P1S-S016SS-0015	103	99	22.3	19
P1S-S016SS-0025	105	99	22.3	17
P1S-S016SS-0040	106	95	22.3	14
P1S-S016SS-0050	108	95	22.3	12
P1S-S016SS-0080	107	95	22.5	12
P1S-S020SS-0010	163	161	30	28
P1S-S020SS-0015	164	161	30	27
P1S-S020SS-0025	167	161	30	25
P1S-S020SS-0040	166	159	30	22
P1S-S020SS-0050	168	159	30	20
P1S-S020SS-0080	170	161	29.4	18
P1S-S025SS-0010	256	253	44.3	41.4
P1S-S025SS-0015	258	253	44.3	40
P1S-S025SS-0025	262	253	44.3	37
P1S-S025SS-0040	261	250	44.3	32
P1S-S025SS-0050	264	250	44.3	30
P1S-S025SS-0080	264	251	44.4	30

Order code	Theoretical piston force at 6 bar			
			Spring extension	
	Nmax	Nmin	Nmax	Nmin
Single acting. spring-extend				
P1S-S016TS-0010	85	84	22.3	20.2
P1S-S016TS-0015	86	84	22.3	19
P1S-S016TS-0025	88	84	22.3	17
P1S-S016TS-0040	90	84	22.3	14
P1S-S016TS-0050	91	84	22.3	12
P1S-S020TS-0010	132	130	30	28
P1S-S020TS-0015	133	130	30	27
P1S-S020TS-0025	135	130	30	25
P1S-S020TS-0040	138	130	30	22
P1S-S020TS-0050	140	130	30	20
P1S-S020TS-0080	139	108	31	17
P1S-S025TS-0010	205	203	38.5	36
P1S-S025TS-0015	207	203	38.5	34.7
P1S-S025TS-0025	210	203	38.5	32
P1S-S025TS-0040	214	203	38.5	28.5
P1S-S025TS-0050	217	203	38.5	26
P1S-S025TS-0080	223	206	36	21

Main data

Cylinder designation	Cylinder bore	area	Piston rod bore	area	thread	Total mass at 0 mm stroke	addition per 10 mm stroke	Air consumption	Conn. thread
	mm	cm^2	mm	cm^2		kg	kg	litres	
Double acting. cushioned stroke									
P1S-S010D	10	0.78	4	0.13	M4	0.04	0.003	0.0100 [1)]	M5
P1S-S012D	12	1.13	6	0.28	M6	0.07	0.004	0.0139 [1)]	M5
P1S-S016D	16	2.01	6	0.28	M6	0.09	0.005	0.0262 [1)]	M5
P1S-S020D	20	3.14	8	0.50	M8	0.18	0.007	0.0405 [1)]	G1/8
P1S-S025D	25	4.91	10	0.78	M10x1.25	0.25	0.011	0.0633 [1)]	G1/8
Double acting. adjustable cushioning									
P1S-S020M	20	3.14	8	0.50	M8	0.18	0.007	0.0405 [1)]	G1/8
P1S-S025M	25	4.91	10	0.78	M10x1.25	0.25	0.011	0.0633 [1)]	G1/8
Single acting. spring return									
P1S-S010SS	10	0.78	4	0.13	M4	0.04	0.003	0.0055 [1)]	M5
P1S-S012SS	12	1.13	6	0.28	M6	0.08	0.004	0.0079 [1)]	M5
P1S-S016SS	16	2.01	6	0.28	M6	0.10	0.005	0.0141 [1)]	M5
P1S-S020SS	20	3.14	8	0.50	M8	0.18	0.007	0.0220 [1)]	G1/8
P1S-S025SS	25	4.91	10	0.78	M10x1.25	0.26	0.011	0.0344 [1)]	G1/8
Single acting. spring-extended									
P1S-S016TS	16	2.01	6	0.28	M6	0.10	0.005	0.0141 [1)]	M5
P1S-S020TS	20	3.14	8	0.50	M8	0.18	0.007	0.0220 [1)]	G1/8
P1S-S025TS	25	4.91	10	0.78	M10x1.25	0.26	0.011	0.0344 [1)]	G1/8

1) Free air consumption per 10 mm stroke length for a double stroke at 6 bar

Working medium, air quality

Working medium Dry, filtered compressed air to ISO 8573-1 class 3.4.3.

Recommended air quality for cylinders

For best possible service life and trouble-free operation, ISO 8573-1 quality class 3.4.3 should be used. This means 5 µm filter (standard filter) dew point +3 ºC for indoor operation (a lower dew point should be selected for outdoor operation) and oil concentration 1.0 mg oil/m^3, which is what a standard compressor with a standard filter gives.

Additional data

Working pressure	max 10 bar
Working temperature	max +80 °C
	min –20 °C
High-temperature version	Ø10 to Ø16 max +120°C
	Ø20 to Ø25 max +150°C

Prelubricated, further lubrication is not normally necessary. If additional lubrication is introduced it must be continued.

ISO 8573-1 quality classes

Quality class	Pollution		Water	Oil
	particle size (µm)	max con-centration (mg/m^3)	max press dew point (°C)	max con-centration (mg/m^3)
1	0.1	0.1	-70	0.01
2	1	1	-40	0.1
3	5	5	-20	1.0
4	15	8	+3	5.0
5	40	10	+7	25.
6	-	-	+10	-

Material specification

Piston rod	Stainless steel, X8 CrNiS 18-10 (AISI 321)
Piston rod bearing	Multilayer PTFE/steel
End covers	Stainless steel, X5 CrNi 18-10 (AISI 304)
O-ring, internal	Nitrile rubber, NBR
Cylinder barrel	Stainless steel, X5 CrNi 18-10 (AISI 304)
Magnet holder	Thermoplastic elastomer
Magnet	Plastic-coated magnetic material
Return spring	Surface-treated steel
Cushioning screw	Stainless steel, X10 CrNiS 18-9 (AISI 303)

Variants Mini ISO:

Standard-temperature version, type S:

Piston rod seal	Nitrile rubber, NBR
Piston complete	Nitrile rubber, NBR/steel

High-temperature version, type F:

Piston rod seal	Fluorocarbon rubber, FPM
Piston complete	HNBR/steel

Cylinders with outer sealings in fluorcarbon, type V:

Piston rod seal/ Scraper ring	Fluorocarbon rubber, FPM
Piston complete	Nitrile rubber, NBR/steel

Spare part = new cylinder

Cushioning diagram

Use the diagram below to determine the necessary size of cylinder to provide the requisite cushioning performance. The maximum cushioning performance, as indicated in the diagram, is based on the following assumptions:

- Low load, i.e. low pressure drop across the piston
- Steady-state piston speed
- Correctly adjusted cushioning screw

The load is the sum of the internal and external friction, together with any gravity forces. At high relative loading it is recommended that, for a given speed, the load should be reduced by a factor of 2.5, or that, for a given mass, the speed should be reduced by a factor of 1.5. These factors apply in relation to the maximum performance as shown in the diagram.

Fixed end-cushioning
Speed [m/s]

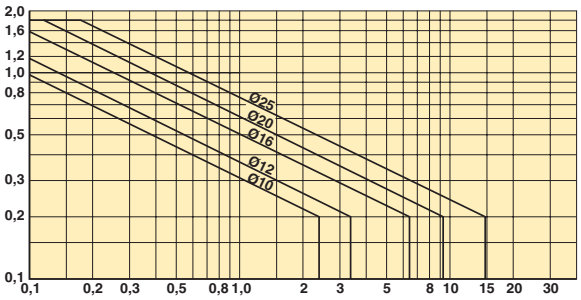

Adjustable pneumatic end-cushioning
Speed [m/s]

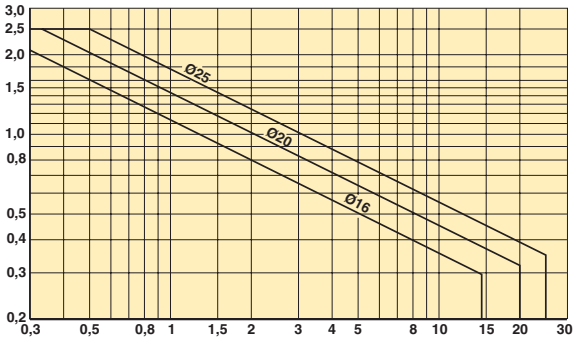

Tel: +45 63 12 83 00 | Email: ps@hymatik.com | www.hymatik.com | Hvidkaervej 27a, DK-5250 Odense SV, Denmark

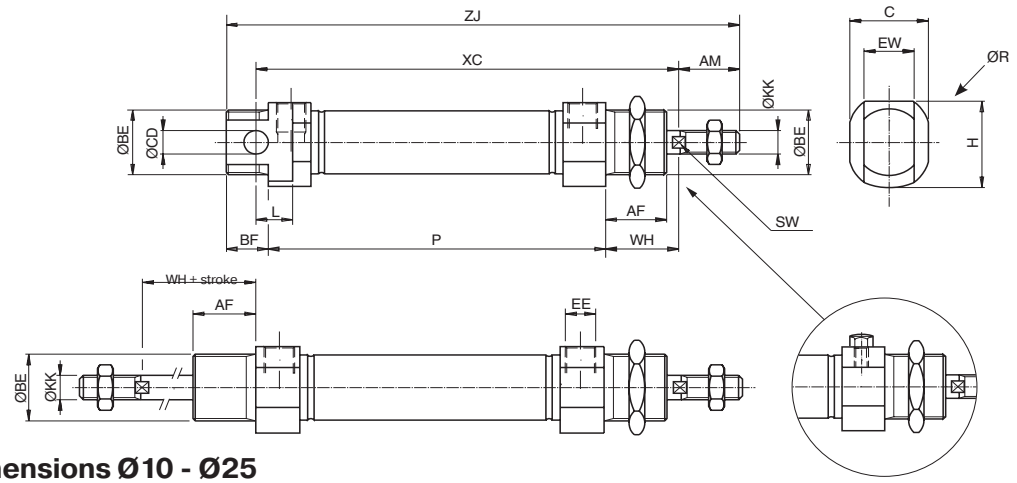

Dimensions Ø10 - Ø25

Cylinder bore mm	EE	Ø BE mm	Ø CD H9 mm	BF mm	L mm	AF mm	WH ±1,2 mm	AM 0/-2 mm	Ø KK mm	SW mm	C mm	EW mm	H mm	Ø R mm
10 [1]	M5	M12x1,25	4	10	6	12	16	12	M4	-	13,0	8	13,5	16,0
10 [2]	M5	M12x1,25	4	10	6	12	16	12	M4	-	13,0	8	14,0	16,0
12	M5	M16x1,50	6	13	9	18	22	16	M6	5	17,8	12	17,8	20,0
16	M5	M16x1,50	6	13	9	18	22	16	M6	5	17,8	12	17,8	20,0
20	G1/8	M22x1,50	8	14	12	20	24	20	M8	7	23,8	16	23,8	27,0
25	G1/8	M22x1,50	8	14	12	22	28	22	M10x1,25	9	26,8*	16	26,8*	31*

[1] SS / TS single acting [2] DS / MS double acting * For K_, SF, F_ version dimensions are 27,5 | 27,5 | Ø34

Double acting cylinders

Cylinder bore mm	ZJ mm	XC mm	P mm
10	84 + stroke	64 + stroke	46 + stroke
12	99 + stroke	75 + stroke	48 + stroke
16 [2]	104 + stroke	82 + stroke	53 + stroke
20 [2]	125 + stroke	95 + stroke	67 + stroke
25 [2]	132 + stroke	104 + stroke	68 + stroke

Single acting cylinders, spring return type S

Stroke Cyl. bore mm	10 XC mm	15 XC mm	25 XC mm	40 XC mm	50 XC mm	80 XC mm	10 ZJ mm	15 ZJ mm	25 ZJ mm	40 ZJ mm	50 ZJ mm	80 ZJ mm	10 P mm	15 P mm	25 P mm	40 P mm	50 p mm	80 P mm
10	74	79	89	126	136	174	94	99	109	146	156	194	56	61	71	108	118	156
12	85	90	100	132	142	185	109	114	124	156	166	209	58	63	73	105	115	158
16	92	97	107	122	132	184	114	119	129	144	154	206	63	68	78	93	103	155
20	105	110	120	135	145	191	135	140	150	165	175	221	77	82	92	107	117	163
25	114	119	129	144	154	201	142	147	157	172	182	229	78	83	93	108	118	165

Length tolerances ±1mm
Stroke length tolerances +1.5/0 mm

Cylinders are supplied complete with mounting and adjusting nuts. Cylinders with through piston rod are supplied complete with two adjusting nuts and one mounting nut.

Single acting cylinders, spring extend type T

Stroke Cyl. bore mm	10 XC[3] mm	15 XC[3] mm	25 XC[3] mm	40 XC[3] mm	50 XC[3] mm	80 XC[3] mm	10 ZJ[3] mm	15 ZJ[3] mm	25 ZJ[3] mm	40 ZJ[3] mm	50 ZJ[3] mm	80 ZJ[3] mm	10 P mm	15 P mm	25 P mm	40 P mm	50 p mm	80 P mm
16	107	112	122	137	147	-	129	134	144	159	169	-	78	83	93	108	118	-
20	120	125	135	150	160	195	150	155	165	180	190	225	92	97	107	122	132	167
25	129	134	144	159	169	205	157	162	172	187	197	233	93	98	108	123	133	169

[3] With piston rod retracted as shown in the dimension drawing Length tolerances ±1mm Stroke length tolerances +1.5/0 mm

Tel: +45 63 12 83 00 | Email: ps@hymatik.com | www.hymatik.com | Hvidkaervej 27a, DK-5250 Odense SV, Denmark

Order key

P 1 S – S **0 1 6** **M** **S** **–** **0 0 2 5**

Cylinder bore mm
010
012
016
020
025

	Cylinder type / function	
M		Double-acting, adjustable cushioning. Ø 20-25 mm. Not for sealing material type F.
D		Double-acting, non-adjustable cushioning, Ø10 - 25 mm
F	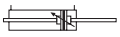	Double-acting, adjustable cushioning, thru-rod, Ø 20 - 25 mm. Not for sealing material type F.
K		Double-acting, non-adjustable cushioning, thru-rod, Ø10 - 25 mm
S		Single-acting, non-adjustable cushioning, spring return for retract stroke, Ø10 - 25 mm. Not for sealing material type type F & V.
T		Single-acting, non-adjustable cushioning, spring return for advance stroke, Ø16 - 25 mm. Not for sealing material type F & V.

Stroke in mm
E.g. **0025** = 25 mm For standard stroke length and max length, see table below

	Sealing material	
S		Standard, -20 °C to +80 °C. Magnetic piston
F		High temperature, Ø10 to Ø16 -10 to +120°C Ø20 to Ø25 -10 to +150°C Non-magnetic piston
V		External seals of fluorinated rubber. -20 °C to +80 °C. Magnetic piston

Stroke length

● Standard stroke length in mm ▭ Non standard stroke length

Cylinder designation	Cylinder bore	10	15	20	25*	30	40	50*	80*	100*	125*	160*	200*	250*	320*	400*	500*
Double acting with fixed end-cushioning:																	
P1S-S010D	10	•	•	•	•	•	•	•	•	•	•						
P1S-S012D	12	•	•	•	•	•	•	•	•	•	•	•	•				
P1S-S016D	16	•	•	•	•	•	•	•	•	•	•	•	•				
P1S-S020D**	20		•	•	•	•	•	•	•	•	•	•	•	•	•	•	
P1S-S025D**	25		•	•	•	•	•	•	•	•	•	•	•	•	•	•	
Double acting with adjustable end-cushioning:																	
P1S-S020M**	20		•	•	•	•	•	•	•	•	•	•	•	•	•		
P1S-S025M**	25		•	•	•	•	•	•	•	•	•	•	•	•	•		
Single acting, spring return:																	
P1S-S010SS	10	•	•		•		•	•	•								
P1S-S012SS	12	•	•		•		•	•	•								
P1S-S016SS	16	•	•		•		•	•	•								
P1S-S020SS	20	•	•		•		•	•	•								
P1S-S025SS	25	•	•		•		•	•	•								
Single acting, spring-extended:																	
P1S-S016TS	16	•	•		•		•	•									
P1S-S020TS	20	•	•		•		•	•	•								
P1S-S025TS	25	•	•		•		•	•	•								

* Standard stroke lengths in mm according to ISO 4393
** Max stroke 1000 mm

Tel: +45 63 12 83 00 | Email: ps@hymatik.com | www.hymatik.com | Hvidkaervej 27a, DK-5250 Odense SV, Denmark

Cylinder mountings

Type	Description	Cyl. bore Ø mm	Weight kg	Order code
Stainless flange MF8	Intended for fixed attachment of the cylinder. The flange is designed for mounting on the front or rear end-covers. Material: Stainless steel, X10 CrNiS 18-9 (AISI 303)	10 12-16 20-25	0.012 0.025 0.045	**P1S-4CMB** **P1S-4DMB** **P1S-4HMB**



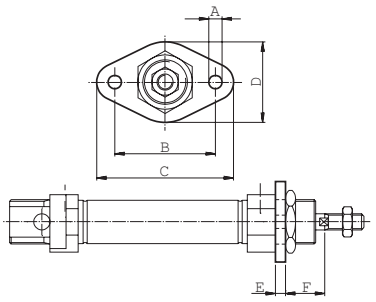

Cylinder Ø mm	A mm	B mm	C mm	D mm	E mm	F mm
10	4.5	30	40	22	3	13
12-16	5.5	40	52	30	4	18
20	6.6	50	66	40	5	19
25	6.6	50	66	40	5	23

Type	Description	Cyl. bore Ø mm	Weight kg	Order code
Stainless foot MS3	Intended for fixed attachement of the cylinder. The bracket is designed for mounting on the front or rear end-covers. Material: Stainless steel, X10 CrNiS 18-9 (AISI 303)	10 12-16 20-25	0.020 0.040 0.080	**P1S-4CMF** **P1S-4DMF** **P1S-4HMF**



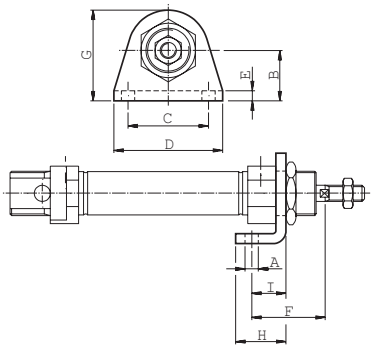

Cylinder Ø mm	A mm	B mm	C mm	D mm	E mm	F mm	G mm	H mm	I mm
10	4.5	16	25	35	3	24	26	16	11
12-16	5.5	20	32	42	4	32	32.5	20	14
20	6.6	25	40	54	5	36	45	25	17
25	6.6	25	40	54	5	40	45	25	17

Type	Description	Cyl. bore Ø mm	Weight kg	Order code
Stainless Cover trunnion	Intended for articulated mounting of the cylinder. The flange is designed for mounting on the front or rear end-covers. Material: Stainless steel, X10 CrNiS 18-9 (AISI 303)	10 12-16 20-25	0.014 0.033 0.037	**P1A-4CMJ** **N/A** **P1A-4HMJ**



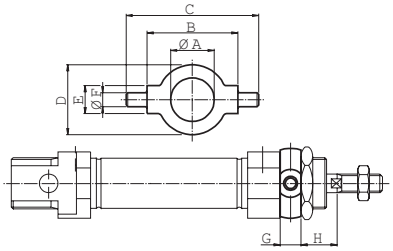

Cylinder Ø mm	A mm	B h14 mm	C mm	D mm	E e9 mm	F mm	G mm	H mm
10	12.5	26	38	20	8	4	6	10
12-16	–	–	–	–	–	–	–	–
20	22.5	46	66	30	10	6	8	16
25	22.5	46	66	30	10	6	8	20

Tel: +45 63 12 83 00 | Email: ps@hymatik.com | www.hymatik.com | Hvidkaervej 27a, DK-5250 Odense SV, Denmark

Cylinder mountings

Type	Description	Cyl. bore Ø mm	Weight kg	Order code
Stainless Neck nut MR3 	Intended for fixed mounting of the cylinder. Cylinders are supplied complete with one mounting nut. Material: Stainless steel, X5 CrNi 18-10 (AISI 304) Supplied in quantity packs of 10 off.	10 12-16 20-25	0.009 0.018 0.042	**P14-4LRPS** **P14-4MRPS** **P14-4HRMS**

Cylinder Ø mm	A mm	B mm	C
10	19	6	M12x1,25
12-16	24	8	M16x1,50
20-25	27	5	M22x1,50

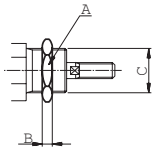

Type	Description	Cyl. bore Ø mm	Weight kg	Order code
Stainless Clevis bracket AB3 	Intended for articulated mounting of the cylinder. Supplied with shaft for mounting on the rear end cover. Material: Bracket: stainless steel, X5 CrNi 18-10 (AISI 304) Pin: tempered stainless steel, X 20 Cr 13 (AISI 420) Locking rings: stainless steel, X5 CrNi 18-10 (AISI 304)	10 12-16 20-25	0.020 0.040 0.080	**P1S-4CMT** **P1S-4DMT** **P1S-4HMT**

Cylinder Ø mm	A mm	B mm	C mm	D mm	E mm	F mm	G mm	H mm	I °	J °
10	4,5	13	8.1	24	12,5	20	65.3	5	160	17
12	5.5	18	12.1	27	15	25	73	7	170	15
16	5.5	18	12.1	27	15	25	80	7	170	15
20	6.6	24	16.1	30	20	32	91	10	165	10
25	6.6	24	16.1	30	20	32	100	10	165	10

S = stroke

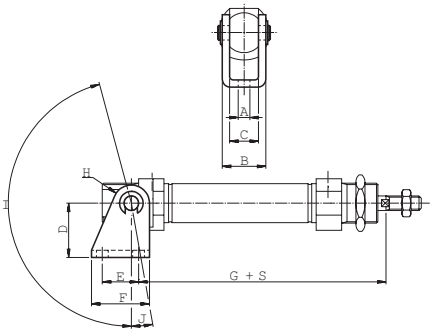

Type	Description	Cyl. bore Ø mm	Weight kg	Order code
Stainless Clevis AP2 	According to ISO 8140 Intended for articulated mounting of the cylinder. This mounting is adjustable in the axial direction. Supplied complete with pin. Material: Stainless steel, X5 CrNi 18-10 (AISI 304)	10 12-16 20 25	0.007 0.022 0.045 0.095	**P1S-4CRD** **P1S-4DRD** **P1S-4HRD** **P1S-4JRD**

Cylinder Ø mm	A mm	B	C mm	D mm	E mm	F mm	G mm	H mm	I mm	J mm
10	4	M4	2.2	8	8	5	16	4	22	2
12-16	6	M6	3.2	12	12	7	24	6	31	3
20	8	M8	4	16	16	10	32	8	40.5	3.5
25	10	M10x1.25	5	20	20	12	40	10	49	3

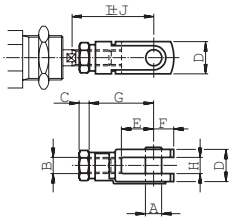

Tel: +45 63 12 83 00 | Email: ps@hymatik.com | www.hymatik.com | Hvidkaervej 27a, DK-5250 Odense SV, Denmark

Cylinder mountings

Type	Description	Cyl. bore Ø mm	Weight kg	Order code
Stainless Swivel rod eye AP6 	According to ISO 8139 Intended for articulated mounting of the cylinder. This mounting is adjustable in the axial direction. Material: Swivel rod eye: stainless steel, X5 CrNi 18-10 (AISI 304) Ball: hardened stainless steel, X5 CrNi 18-10 (AISI 304)	10 12-16 20 25	0.017 0.025 0.045 0.085	**P1S-4CRT** **P1S-4DRT** **P1S-4HRT** **P1S-4JRT**

Cylinder Ø mm	A mm	B	C mm	D mm	E mm	F mm	G mm	H mm	I mm	J mm	K mm	L mm
10	5	M4	2.2	8	10	9	27	6	8	33	9	2
12-16	6	M6	3.2	9	10	10	30	6.8	9	38.5	11	1.5
20	8	M8	4	12	12	12	36	9	12	46	14	2
25	10	M10x1.25	5	14	14	14	43	10.5	15	52.5	17	2.5

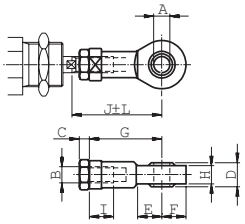

Type	Description	Cyl. bore Ø mm	Weight kg	Order code
Stainless Rod nut MR9 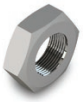	Intended for fixed mounting on the piston rod. Cylinders are supplied complete with one rod nut. (cylinders with through piston rod are supplied with two rod nuts.) Material: Stainless steel, X5 CrNi 18-10 (AISI 304) Supplied in quantity pack of 10 off.	10 12-16 20 25	0.001 0.002 0.005 0.007	**P14-4CRPS** **P14-4DRPS** **P14-4HRPS** **P14-4KRPS**

Cylinder Ø mm	D	F mm	E mm
10	M4	7	2.2
12-16	M6	10	3.2
20	M8	13	4
25	M10x1.25	17	5

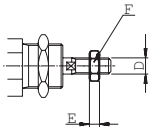

Parker Hannifin Corporation
Pneumatic Division - Europe

Tel: +45 63 12 83 00 | Email: ps@hymatik.com | www.hymatik.com | Hvidkaervej 27a, DK-5250 Odense SV, Denmark

Magnetic piston as standard.

Ø32-Ø63, ISO 6431

Installation dimensions according to ISO 6431/6432

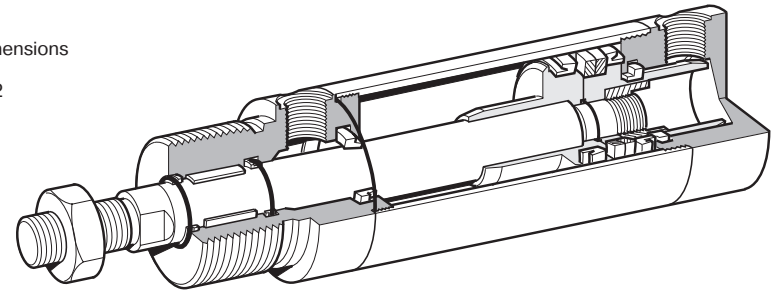

Adjustable pneumatic cushioning for the Ø32-Ø63. Mechanically secured cushioning screws.

External seals of fluorocarbon rubber

Stainless steel cylinders

Parker Pneumatic's range of stainless steel cylinders has been specially designed for use in difficult environments. Smooth design, external seals of fluorianted rubber and prelubrication with our food-industry-approved grease according to USDA-H1 make the cylinders particularly suitable for food industry use.
All cylinders have magnetic pistons for proximity position sensing. Fixing dimensions to ISO 6431/6432 simplify installation and make the cylinders physically interchangeable throughout the world.

ISO 6431

The ISO cylinders are double-acting round cylinders with several types of cylinder mountings as standard. The cylinders are available in 32 to 63 mm diameters, incorporating adjustable end-cushioning. As with the ISO 6432 it is designed to comply with hygiene requirements in accordance with the EU Machine Directive.

The cylinder can be dismantled to facilitate service and maintenance.

Main data: ISO 6431

Cylinder designation	Cylinder bore	area	diam.	Piston rod area	thread	Cushioning distance	Total mass at 0 mm stroke	addition per 10 mm stroke	Moving mass at 0 mm stroke	addition per 10 mm stroke	Air Consumption	Port thread
	mm	cm^2	mm	cm^2		mm	kg	kg	kg	kg	litres	
P1S-•032M	32	8.0	12	1.1	M10x1.25	15	0.59	0.026	0.10	0.009	0.105 [1]	G1/8
P1S-•040M	40	12.6	16	2.0	M12x1.25	18	0.99	0.036	0.19	0.016	0.162 [1]	G1/4
P1S-•050M	50	19.6	20	3.1	M16x1.5	19	1.63	0.057	0.32	0.024	0.253 [1]	G1/4
P1S-•063M	63	31.2	20	3.1	M16x1.5	22	2.75	0.065	0.36	0.024	0.414 [1]	G3/8

1) Free air consumption per 10 mm stroke length for a double stroke at 600 kPa (6 bar)

Cylinder forces

Indicated cylinder forces are theoretical and should be reduced in relation to working conditions.

Cylinder designation	Theoretical cylinder force at 600 kPa (6 bar) exp. stroke	return stroke
	N	N
P1S-•032M	480	415
P1S-•040M	754	633
P1S-•050M	1180	990
P1S-•063M	1870	1680

Working medium, air quality

Working medium Dry, filtered compressed air to ISO 8573-1 class 3.4.3.

Recommended air quality for cylinders

For best possible service life and trouble-free operation, ISO 8573-1 quality class 3.4.3 should be used. This means 5 µm filter (standard filter) dew point +3 °C for indoor operation (a lower dew point should be selected for outdoor operation) and oil concentration 1.0 mg oil/m^3, which is what a standard compressor with a standard filter gives.

ISO 8573-1 quality classes

Quality class	Pollution particle size (µm)	Pollution max concentration (mg/m^3)	Water max. press. dew point (°C)	Oil max concentration (mg/m^3)
1	0.1	0.1	-70	0.01
2	1	1	-40	0.1
3	5	5	-20	1.0
4	15	8	+3	5.0
5	40	10	+7	25
6	-	-	+10	-

Additional data

Working pressure	max 10 bar
Working temperature	max +80 °C
	min –20 °C
High-temperature version	max+150 °C
	min –10 °C

Prelubricated, further lubrication is not normally necessary. If additional lubrication is introduced it must be continued.

Cushioning diagram

Use the diagram below to determine the necessary size of cylinder to provide the requisite cushioning performance. The maximum cushioning performance, as indicated in the diagram, is based on the following assumptions:

– Low load, i.e. low pressure drop across the piston
– Steady-state piston speed
– Correctly adjusted cushioning screw

The load is the sum of the internal and external friction, together with any gravity forces. At high relative loading it is recommended that, for a given speed, the load should be reduced by a factor of 2.5, or that, for a given mass, the speed should be reduced by a factor of 1.5. These factors apply in relation to the maximum performance as shown in the diagram.

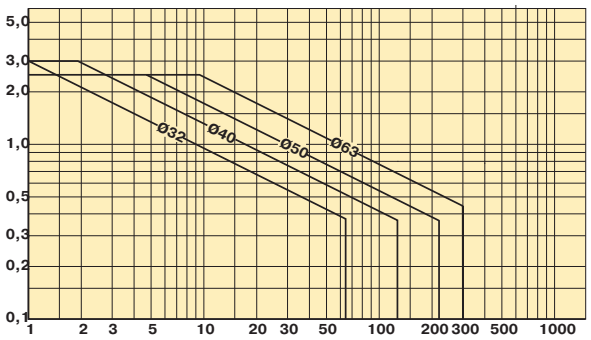

Speed [m/s] Mass [kg]

Tel: +45 63 12 83 00 | Email: ps@hymatik.com | www.hymatik.com | Hvidkaervej 27a, DK-5250 Odense SV, Denmark

Threaded front end

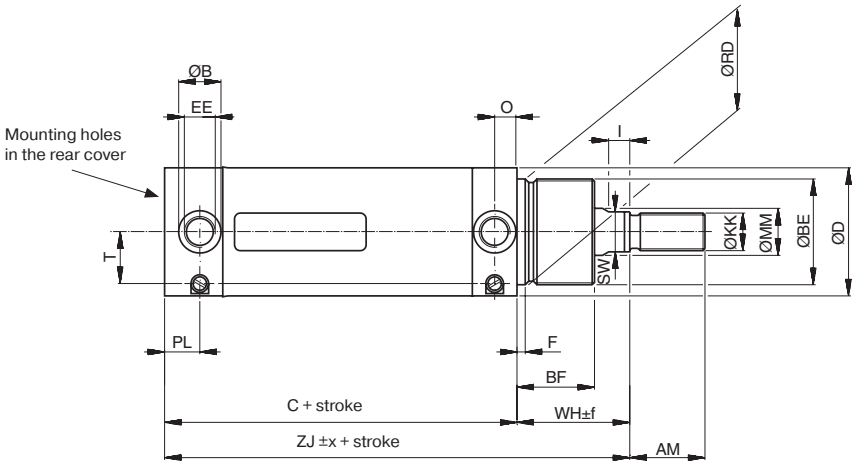

Mounting holes in the rear cover

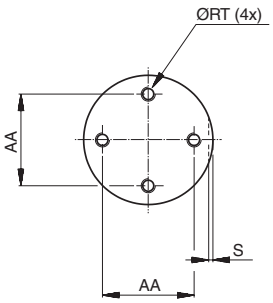

Basic cylinder

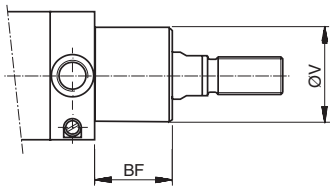

Dimensions Ø32 - Ø63

Cylinder designation	AA mm	AM mm	B mm	BF mm	BE	C mm	D mm	EE	F mm	I mm	KK	MM mm	O mm	PL mm	RD mm	RT mm
P1S-D032M	24.5	22	15	25	M30x1.5	88	36	G1/8	4.2	6	M10x1.25	12	8	13	30	M5
P1S-D040M	30	24	18	30	M38x1.5	97	44	G1/4	4.5	9	M12x1.25	16	9.5	15	38	M6
P1S-D050M	39	32	18	33	M45x1.5	101	55	G1/4	4.5	9	M16x1.5	20	9.5	15	45	M6
P1S-D063M	49	32	25	33	M45x1.5	117	68	G3/8	4.5	9	M16x1.5	20	13.3	20.5	45	M8

Cylinder designation	S mm	SW mm	T mm	V mm	WH mm	ZJ mm	Mounting tolerances x mm	Mounting tolerances f mm	Stroke length 0-500 mm
P1S-D032M	1.5	10	12.2	26	35.5	123.5	1.2	2.5	+2.0
P1S-D040M	1.5	14	16.5	35	44	141	1.0	2.2	+2.0
P1S-D050M	1.5	17	22	41	47	148	0.9	2.3	+2.0
P1S-D063M	1.5	17	26	41	47	164	1.4	2.3	+2.5

Material specification Ø32 - Ø63

Piston rod	Stainless steel, X2 CrNiMo 17-13-2 (AISI 316L)
Piston rod nut	Stainless steel, X5 CrNi 18-10 (AISI 304)
Piston rod seal	UHMWPE-plastic/NBR
Scraper ring	UHMWPE-plastic/fluorocarbon rubber, FPM
Piston rod bearing	HDPE-plastic
End covers	Stainless steel, X5 CrNi 18-10 (AISI 304)
Cushioning screw	Stainless steel, X10 CrNiS 18-9 (AISI 303)
Cushioning screw lockings	Stainless steel, X5 CrNi 18-10 (AISI 304)
Cushioning sealing	NBR
O-ring, cushioning screw	Fluorocarbon, FPM
O-ring, internal	NBR
Cylinder barrel	Stainless steel, X5 CrNi 18-10 (AISI 304)
Piston	POM plastic
Piston seal	NBR
Piston nut	Zinc plated steel
Magnet	Plastic-coated magnetic material

Variants Ø32 - Ø63

High-temperature version, type F:

Sealings/scraper ring fluorocarbon rubber, FPM
Piston anodised aluminium

Tel: +45 63 12 83 00 | Email: ps@hymatik.com | www.hymatik.com | Hvidkaervej 27a, DK-5250 Odense SV, Denmark

P1S Series Stainless Steel Pneumatic Cylinders

Order key

P 1 S – D | 0 3 2 | M | S | – | 0 0 2 5

Cylinder version

D	Threaded front cover, 4 mounting holes in rear cover.
F	Plain front cover, 4 mounting holes in rear cover.

Cylinder bore (mm)

032
040
050
063

Cylinder type / function

M	Double acting, adjustable pneumatic cushioning. 

Sealing material

S	Standard -20°C to +80°C. (Magnetic piston).
F	High temperature -10°C to +150°C. (Non-magnetic piston).

Stroke (mm)

Eg. 0025 = 25mm.
For standard strokes and maximum length. (See table below).

Stroke length

● Standard stroke length in mm ▭ Non standard stroke length

Cylinder designation	Cylinder bore	25	50	80	100	125	160	200	250	320	400	500
P1S-*032M	32	•	•	•	•	•	•	•	•	•	•	•
P1S-*040M	40	•	•	•	•	•	•	•	•	•	•	•
P1S-*050M	50	•	•	•	•	•	•	•	•	•	•	•
P1S-*063M	63	•	•	•	•	•	•	•	•	•	•	•

Maximum stroke 1000 mm.

P1S Series Stainless Steel Pneumatic Cylinders

Cylinder mountings Ø32 - Ø63

Type	Description	Cyl. bore Ø mm	Weight kg	Order code
Stainless clevis bracket MP4	Intended for articulated mounting of the cylinder versions D or F. The bracket is mounted at the rear end cover and is supplied complete with shaft, mounting screw and O-ring for a clean joint between end cover and bracket. Material: Stainless steel, X5 CrNi 18-10 (AISI 304)	32 40 50 63	0.09 0.12 0.19 0.34	**P1S-4KME** **P1S-4LME** **P1S-4MME** **P1S-4NME**



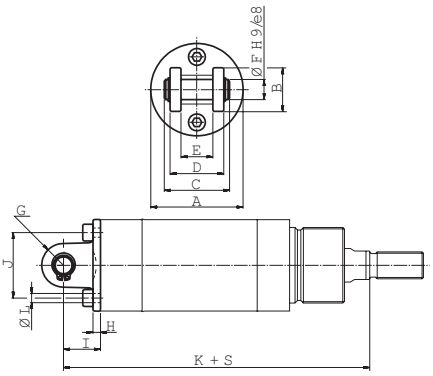

Cylinder Ø mm	A mm	B mm	C mm	D mm	E mm	F mm	G mm	H mm	I mm	J mm	K mm	L mm
32	35.5	20	33	26	15	10	10	4.5	18.5	25	142	5.5
40	43.5	24	35	28	17	12	12	4	19	30	160	6.5
50	54.5	26	39	32	17	12	13	4.5	22	39	170	6.5
63	67.5	34	47	40	22	16	17	6	26	49	190	8.6

S = Stroke

Type	Description	Cyl. bore Ø mm	Weight kg	Order code
Stainless neck nut MR3	Intended for fixed mounting of the cylinder via the neck. Material: stainless steel, X5 CrNi 18-10 (AISI 304)	32 40 50-63	0.03 0.06 0.08	**9127294401** **9127294402** **9127294403**



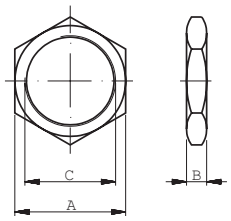

Cylinder Ø mm	A mm	B mm	C
32	36	8	M30x1.5
40	46	10	M38x1.5
50	55	10	M45x1.5
63	55	10	M45x1.5

Type	Description	Cyl. bore Ø mm	Weight kg	Order code
Acid-proof rod nut MR9	Intended for fixed mounting on the piston rod. Cylinders are supplied complete with one rod nut. (cylinders with through piston rods are supplied with two rod nuts.) Material: Acid-proof steel A4	32 40 50 63	0.007 0.010 0.021 0.021	**P14-4KRPX** **P14-4LRPX** **P14-4MRPX** **P14-4MRPX**
Stainless rod nut MR9	Intended for fixed mounting of accessories to the piston rod. Material: Stainless steel, A2	32 40 50 63	0.007 0.010 0.021 0.021	**P14-4KRPS** **P14-4LRPS** **P14-4MRPS** **P14-4MRPS**





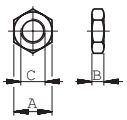

Supplied as pack of 10 off weight per item

Cylinder Ø mm	A mm	B mm	C
32	17	5	M10x1.25
40	19	6	M12x1.25
50	24	8	M16x1.5
63	24	8	M16x1.5

Parker Hannifin Corporation
Pneumatic Division - Europe

Tel: +45 63 12 83 00 | Email: ps@hymatik.com | www.hymatik.com | Hvidkaervej 27a, DK-5250 Odense SV, Denmark

P1S Series Stainless Steel Pneumatic Cylinders

Cylinder mountings Ø32 - Ø63

Type	Description	Cyl. bore Ø mm	Weight kg	Order code
Stainless swivel rod eye AP6	According to ISO 8139 Intended for articulated mounting of the cylinder. This mounting is adjustable in the axial direction. Materal: Swivel rod eye: stainless steel, X5 CrNi 18-10 (AISI 304) Ball: hardened stainless steel, X5 CrNi 18-10 (AISI 304)	32 40 50-63	0.08 0.12 0.25	**P1S-4JRT** **P1S-4LRT** **P1S-4MRT**



Cyl. Ø mm	A mm	B_{min} mm	B_{max} mm	C mm	D mm	E mm	F mm	G mm	H mm	I mm	K mm	L	M
32	28	50	55	10	15	43	14	15	14	10.5	17	M10x1.25	24°
40	32	56	62	12	17	50	16	22	16	12	19	M12x1.25	24°
50	42	72	80	16	22	64	21	28	21	15	22	M16x1.5	30°
63	42	72	80	16	22	64	21	28	21	15	22	M16x1.5	30°

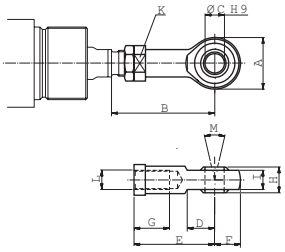

Type	Description	Cyl. bore Ø mm	Weight k	Order code
Stainless clevis AP2	According to ISO 8140 Intended for articulated mounting of the cylinder. This mounting is adjustable in the axial direction. Supplied complete with pin. Material: Clevis: stainless steel, X10 CrNiS 18-9 (AISI 303) Pin: stainless steel, X5 CrNi 18-10 (AISI 304) Locking rings according to DIN 471	32 40 50-63	0.09 0.15 0.35	**P1S-4JRD** **P1S-4LRD** **P1S-4MRD**



Cylinder Ø mm	A mm	B_{min} mm	B_{max} mm	C mm	D mm	E mm	F mm	G mm	H mm	I
32	20	46	52	10	20	40	12	28	10	M10x1.25
40	24	54	60	12	24	48	19	32	12	M12x1.25
50	32	72	80	16	32	64	25	42	16	M16x1.5
63	32	72	80	16	32	64	25	42	16	M16x1.5

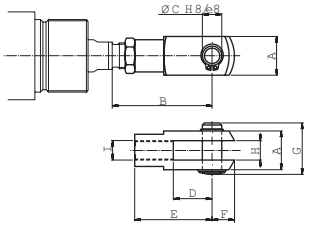

Parker Hannifin Corporation
Pneumatic Division - Europe

Tel: +45 63 12 83 00 | Email: ps@hymatik.com | www.hymatik.com | Hvidkaervej 27a, DK-5250 Odense SV, Denmark

Seal kits for P1S cylinders

Complete seal kits consisting of:
Piston seals
Cushioning seals
Piston rod bearing
Piston rod seal
Scraper ring
O-rings

Material specification, see page 16.

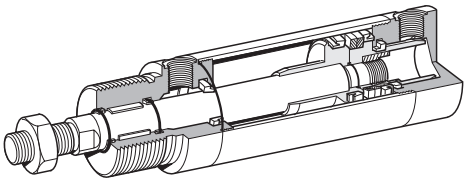

Standard temperature versions

Cylinder designation	Order code
P1S-•032MS	**9121659195**
P1S-•040MS	**9121659196**
P1S-•050MS	**9121659197**
P1S-•063MS	**9121659198**

High temperature versions

Cylinder designation	Order code
P1S-•032MF	**9121720595**
P1S-•040MF	**9121720596**
P1S-•050MF	**9121720597**
P1S-•063MF	**9121720598**



Grease

Version	Weight	Order code
Standard and Low temperature	30 g	**9127394541**
High temperature	30 g	**9127394521**

Parker Hannifin Corporation
Pneumatic Division - Europe

Tel: +45 63 12 83 00 | Email: ps@hymatik.com | www.hymatik.com | Hvidkaervej 27a, DK-5250 Odense SV, Denmark

P8S Electronic and Reed Sensors

The P8S Series magnetic cylinder sensor enables quick, precise and contactless sensing of the piston's position in cylinders. It is easy to mount, can be used in numerous applications and offers an outstanding price-performance ratio.

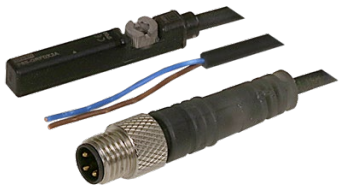

Product Overview

As the term magnetic switch suggests, these are operated by magnetic fields; another description widely used is magnetic „SENSOR". As our eyes sense change of light, our ears sense the change of sound, magnetic sensors / switches sense the change of magnetic flux in pneumatic and hydraulic cylinders. When magnetic sensors sense a magnetic field it will give a switching signal, through a control circuit, allowing sensing or control operation to be achieved.

Because of the characteristics of magnetic sensors they can sense a change of magnetic field relative to the position of the magnet, such as in a pneumatic or hydraulic cylinder, whereby the magnet is attached to a moving piston and thus the position of the moving part (ie Piston) can be detected.

The magnet is mounted on the piston of the cylinder and thus moves with the piston.

The magnetic sensor (switch) is fixed either directly to the cylinder or with an additional mounting bracket. When the piston (magnet) moves to the position under a magnetic sensor, the switch will operate due to the change of the magnetic field and give a switching signal.

Thus the position of the piston can be identified and a resulting signal generated to continue the sequence of a circuit.

Magnetic sensors available can be classified into two different groups, they are sensors with contacts which are called mechanically operated or reed sensors and the other type is sensors without contacts and are called solid state type or electronic.

Parker P8S Series sensors are suitable for use with a large range of Sensors. They can either be inserted directly into the cylinder tube extrusion or mounted using additional brackets. For direct mounting the sensor is positioned within the cylinder sensor groove, offering mechanical protection, then securely clamped into postion by a simple turn of a screw. For other cylinder versions there are a number of optional sensors brackets that clamp to the cylinder and offer other mounting positions. To easy installation there are several cable lengths available with either M8 connnector or flying lead. The electronic sensors are "Solid State", i.e. they have no moving parts. They are provided with short-circuit protection and transient protection as standard. The built-in electronics make the sensors suitable for applications with high on and off switching frequency where long service life is required.

Please note that for low temperature applications sensors are normally specified for full performance down to -30°C only. High temperature cylinders do not have a magnetic piston and therefore cannot be used with sensors.

Technical Data

Square body design, insert straight in T-slot, screw 1/4 turn

	Electronic PNP | NPN	Electric Reed
Cylinder type:	Profile with T-slot	
Cylinder type with adaptor:	Profile with S-slot (dovetail) | Tie rods | Round cylinders	
Installation:	Quarter turn, fixed by allen key 2.5 mm or flathead screwdriver	
Housing length:	29.5 mm 10 - 30 V DC	29.5 mm 5 - 30 V AC/DC
	24 mm NAMUR	29.5 mm 5 -120 V AC/DC
	29.5 mm ATEX	32.5 mm 5 - 230 V AC/DC
Output Type:	PNP | NPN	Reed
Switching (on/off) switching frequency:	± 1,000 Hz	± 400 Hz
Output Function:	Normally Open (NO) | Normally Closed (NC) 3-wire	Normally Open (NO) | Normally Closed (NC) 2-wire Normally Open (NO) 3-wire
Enclosure rating:	IP67	
	IP67 (NAMUR ATEX)	
Supply Voltage:	10 to 30 V DC	
	8.2 to 20 V DC (NAMUR 1GD)| 10 to 26 V DC (ATEX 3GD)	5 to 30 | 5 to 120 | 5 to 230 V AC/DC 2-wire, 3-wire depending on type
Power consumption:	<= 8 mA	-
	<= 10 mA (NAMUR, ATEX)	-
Voltage drop:	<= 2 V	<= 3.5 V 2-wire | <= 0.1 V 3-wire
	<= 2.2 V (NAMUR, ATEX)	-
Continuous output current Ia:	<= 100 mA	<= 100 mA 3-wire
	<= 60 mA (NAMUR) | <= 50 mA (ATEX)	<= 500 mA (DC) | <= 300 mA (AC)
Switching capacity:	-	<= 6 W
Protection class:	III	III | II 2-wire depending on type
		III 3-wire
Response sensitivity:	2.6 to 3.3 mT	2.1 to 3.4 mT
	2.8 mT (NAMUR, ATEX)	-
Overrun distance:	10 mm	
	9 mm (NAMUR, ATEX)	-
Hysteresis:	<= 0.8 mT	-
	<= 0.5 mT (NAMUR, ATEX)	-
Repetability:	<= 0.1 mT	
Reverse polarity protection:	Yes	No 2-wire
	-	Yes 3-wire
Short circuit protection:	Yes	-
Power-up pulse protection:	Yes (NAMUR, ATEX)	-
Ambiant operating temperature range:	-30 to +80 °C (PUR cable) | -30 to +70°C (PVC cable)	
	-25 to +80 °C (NAMUR 1GD) | -20 to +50°C (ATEX 3GD)	
Shock and vibration resistance:	30 g 11 ms / 10 ... 55 Hz, 1 mm	
EMC:	According to EN 60947-5-2	
International standard:	CE | C UL US | RoHs | Ex | IEC | IEC Ex	
Housing material:	Plastic polyamid PA12	
Screw material:	Stainless steel	
Cable material:	PUR (Polyurethane) | PVC (Polyvinyl Chloride)	
Conductor cross-section:	0.14 mm² | 0,12 mm² depending on type 0.14 mm² (NAMUR, ATEX)	
Indication LED colour:	Yellow, no LED reed NC	
Connector:	M8R (knurled nuts) | None (Flying lead)	

Tel: +45 63 12 83 00 | Email: ps@hymatik.com | www.hymatik.com | Hvidkaervej 27a, DK-5250 Odense SV, Denmark

Dimensions in mm (inch)

PNP, NPN Output 10 to 30 V DC

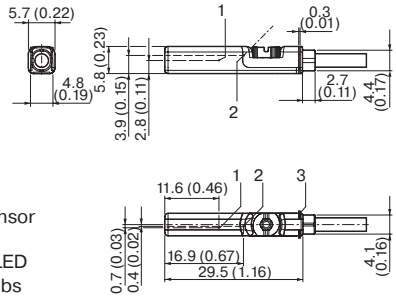

1 Position sensor element
2 Indication LED
3 Retaining ribs

Reed Output 5 to 230 V AC/DC

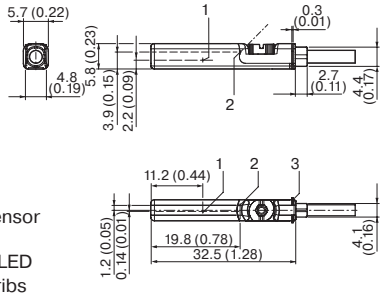

1 Position sensor element
2 Indication LED
3 Retaining ribs

Reed Output 5 to 30 V AC/DC

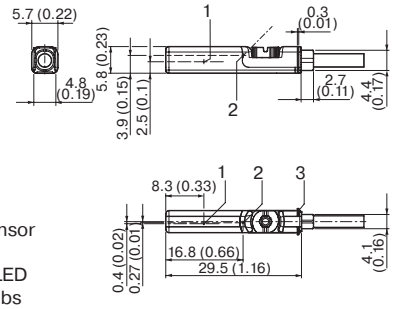

1 Position sensor element
2 Indication LED
3 Retaining ribs

Reed Output 5 to 120 V AC/DC

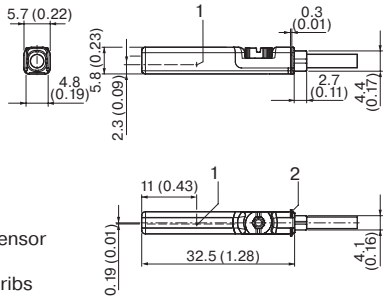

1 Position sensor element
3 Retaining ribs

NAMUR 1G, 1D,

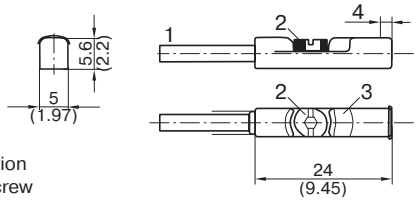

1 Connection
2 Fixing screw
3 Indication LED
4 Position of sensor element; short overrun distance: 2 mm; long overrun distance: 1.7 mm

Connector M8R

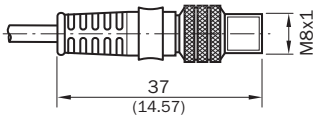

Dimensions in mm (inch)

P8S-TMC01, 02

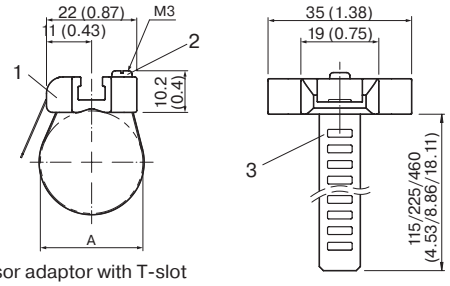

1 Sensor adaptor with T-slot
2 Fixing screw
3 Strap

Order Code	A [mm]	
P8S-TMC01	8 to 25	Clamping ring in nickel silver, screw in stainless steel, sensor mounting zinc diecast
P8S-TMC02	32 to 63	

Connection type and diagram

PNP NO

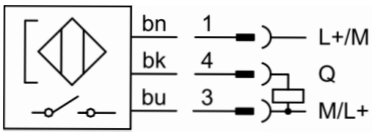

PNP NC

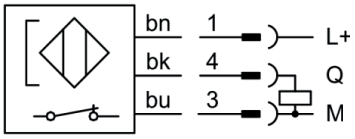

NPN NO

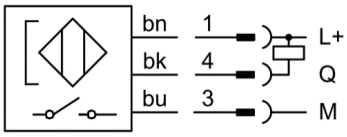

NPN NC

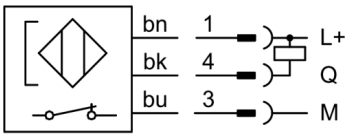

Reed NO 3-wire

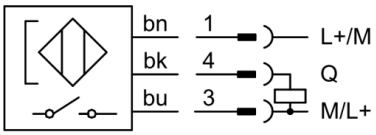

bn: brown
bk: black
bu: blue
Q: load
M: Mass
L+: Power

Reed NO 2-wire

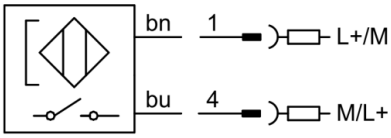

Reed NC 2-wire

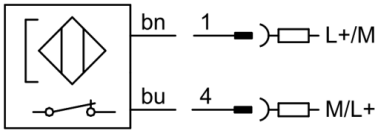

NAMUR NO ATEX 1G, 1D

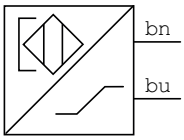

PNP NO ATEX 3G, 3D

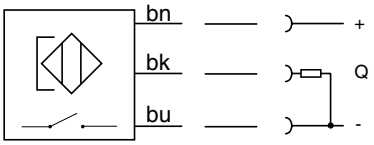

Pin assignment, M8 with knurled nut

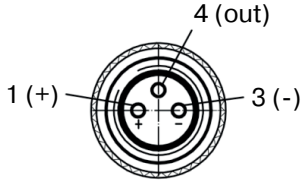

Flying leads

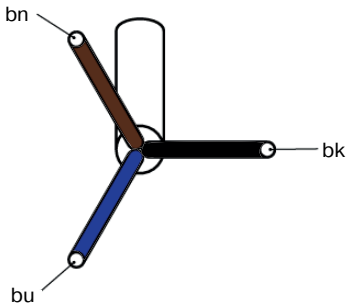

Ordering Data

Output, Function, Cable & Supply Voltage	Order Code	Weight [g]	For Product Series
With flying leads, PUR cable IP67			
Electronic PNP-NC, with LED, 3-wire, 3 metre, 10-30 V DC	**P8SAGQFAX**	35	All Series
Electronic PNP-NC, with LED, 3-wire, 10 metre, 10-30 V DC	**P8SAGQFDX**	105	All Series
Electronic PNP-NO, with LED, 3-wire, 3 metre, 10-30 V DC	**P8SAGPFAX**	35	All Series
Electronic PNP-NO, with LED, 3-wire, 10 metre, 10-30 V DC	**P8SAGPFDX**	105	All Series
Electronic NPN-NC, with LED, 3-wire, 3 metre, 10-30 V DC	**P8SAGMFAX**	35	All Series
Electronic NPN-NC, with LED, 3-wire, 10 metre, 10-30 V DC	**P8SAGMFDX**	105	All Series
Electronic NPN-NO, with LED, 3-wire, 3 metre, 10-30 V DC	**P8SAGNFAX**	35	All Series
Electronic NPN-NO, with LED, 3-wire, 10 metre, 10-30 V DC	**P8SAGNFDX**	105	All Series
Electric Reed-NO, with LED, 3-wire, 3 metre, 5-30 V AC/DC	**P8SAGSFAX**	35	All Series
Electric Reed-NO, with LED, 3-wire, 10 metre, 5-30 V AC/DC	**P8SAGSFDX**	105	All Series
Electric Reed-NO, with LED, 2-wire, 3 metre, 5-30 V AC/DC	**P8SAGRFAX**	35	All Series
Electric Reed-NO, with LED, 2-wire, 10 metre, 5-230 V AC/DC	**P8SAGRFDX2**	105	All Series
Electric Reed-NC, No LED, 2-wire, 10 metre, 5-120 V AC/DC	**P8SAGEFRX1**	105	All Series
Electric Reed-NC, No LED, 2 wire, 10 metre, 5-30V AC/DC	**P8SSAGEFRX**	105	All Series
With flying leads, PVC cable IP67			
Electric Reed-NO, with LED, 3-wire, 3 metre, 5-30 V AC/DC	**P8SAGSFLX**	35	All Series
Electric Reed-NO, with LED, 2-wire, 3 metre, 5-120 V AC/DC	**P8SAGRFLX1**	35	All Series
Electric Reed-NO, with LED, 2-wire, 3 metre, 5-230 V AC/DC	**P8SAGRFLX2**	35	All Series
Electronic PNP-NC, with LED, 3-wire, 3 metre, 10-30 V DC	**P8SAGQFLX**	35	All Series
Electronic PNP-NO, with LED, 3-wire, 3 metre, 10-30 V DC	**P8SAGPFLX**	35	All Series
Electronic PNP-NO, with LED, 3-wire, 10 metre, 10-30 V DC	**P8SAGPFTX**	105	All Series
Electric Reed-NO, with LED, 2-wire, 10 metre, 5-120 V AC/DC	**P8SAGRFTX1**	105	All Series
Electric Reed-NO, with LED, 3-wire, 10 metre, 10-30 V AC/DC	**P8SAGSFTX**	105	All Series
With M8 knurled screw, PUR cable IP67			
Electronic PNP-NC, with LED, 3-wire, 0,3 metre, 10-30 V DC	**P8SAGQCHX**	15	All Series
Electronic PNP-NO, with LED, 3-wire, 0,3 metre, 10-30 V DC	**P8SAGPCHX**	15	All Series
Electronic NPN-NC, with LED, 3-wire, 0,3 metre, 10-30 V DC	**P8SAGMCHX**	15	All Series
Electronic NPN-NO, with LED, 3-wire, 0,3 metre, 10-30 V DC	**P8SAGNCHX**	15	All Series
Electric Reed-NO, with LED, 3-wire, 0,3 metre, 5-30 V AC/DC	**P8SAGSCHX**	15	All Series
Electric Reed-NC, No LED, 2-wire, 0,3 metre, 5-30 V AC/DC	**P8SAGECNX**	15	All Series
Electric Reed-NO, with LED, 2-wire, 0,3 metre, 5-30 V AC/DC	**P8SAGRCHX**	15	All Series
For ATEX IP67			
Electronic PNP-NO, with LED, 3-wire, 3 metre, 10-26 V DC, PUR	**P8SAGPFAXS**	35	ATEX Series 3G, 3D
NAMUR-NO, with LED, 2-wire, 5 metre, 8,2-20 V DC, PVC	**P8SAGDFMXW**	55	ATEX Series 1G, 1D
NAMUR-NO, with LED, 2-wire, 10 metre, 8,2-20 V DC, PVC	**P8SAGDFTXW**	105	ATEX Series 1G, 1D

Note:
-30 to +80 °C (PUR cable) I -30 to + 70 °C (PVC cable) I -25 to +80 °C (NAMUR 1GD I -20 to +50 °C (ATEX 3GD)
All sensors are with an adaptor for S-dovetail Parker type OSP grooves.
* with an aluminium adaptor

Tel: +45 63 12 83 00 | Email: ps@hymatik.com | www.hymatik.com | Hvidkaervej 27a, DK-5250 Odense SV, Denmark

Male connectors for connecting cables

Cable connectors for producting your own connecting cables.
The conncectors can be quickly attached to the cable without special tools. Only the outer sheath of the cable is removed.
The connectors are available for M8 screw connector and meet protection class IP65.

Technical Data

Operating voltage:	max. 32 V AC/DC
Opertaing current per contact:	max. 4 A
Connection cross section:	0.25... 0.5 mm² (conductor diameter min 0.1 mm)
Protection class:	IP65 and IP67 when plugged and screwed down (EN 60529)
Temperature range:	- 25... + 85°C

Connector	Weight [kg]	**Order Code**
M8 screw connector		**P8CS0803J**
M12 screw connector	0.022	**P8CS1204J**



Cables to extend cable sensor lengths with M8*

Description	Order Code	Weight [g]	For Product Series
Cable flex PVC 3 metre with 8mm snap-in connector / flying leads	**9126344341**	70	P8S Sensors with M8
Cable flex PVC 10 metre with 8mm snap-in connector / flying leads	**9126344342**	210	P8S Sensors with M8
Cable PUR 3 metre with 8mm snap-in female connector / flying leads	**9126344345**	70	P8S Sensors with M8
Cable flex PUR 10 metre with 8mm snap-in connector / flying leads	**9126344346**	210	P8S Sensors with M8
Cable PVC 2.5 metre with M8 screw connector / flying leads	**KC3102**	60	P8S Sensors with knurled M8
Cable PVC 5 metre with M8 screw female connector / flying leads	**KC3104**	120	P8S Sensors with knurled M8

*Note: not applicable for P8S CPS Sensors as no cable available

Tel: +45 63 12 83 00 | Email: ps@hymatik.com | www.hymatik.com | Hvidkaervej 27a, DK-5250 Odense SV, Denmark

Specifying air quality (purity) in accordance with ISO8573-1:2010, the international standard for compressed air quality

ISO8573-1 is the primary document used from the ISO8573 series as it is this document which specifies the amount of contamination allowed in each cubic metre of compressed air.

ISO8573-1 lists the main contaminants as Solid Particulate, Water and Oil. The purity levels for each contaminant are shown separately in tabular form, however for ease of use, this document combines all three contaminants into one easy to use table.

ISO8573-1:2010 CLASS	Solid Particulate				Water		Oil
	Maximum number of particles per m^3			Mass Concentration mg/m^3	Vapour Pressure Dewpoint	Liquid g/m^3	Total Oil (aerosol liquid and vapour) mg/m^3
	0,1 - 0,5 micron	0,5 - 1 micron	1 - 5 micron				
0	As specified by the equipment user or supplier and more stringent than Class 1						
1	⩽ 20 000	⩽ 400	⩽ 10	-	⩽ -70 °C	-	0,01
2	⩽ 400 000	⩽ 6 000	⩽ 100	-	⩽ -40 °C	-	0,1
3	-	⩽ 90 000	⩽ 1 000	-	⩽ -20 °C	-	1
4	-	-	⩽ 10 000	-	⩽ +3 °C	-	5
5	-	-	⩽ 100 000	-	⩽ +7 °C	-	-
6	-	-	-	⩽ 5	⩽ +10 °C	-	-
7	-	-	-	5 - 10	-	⩽ 0,5	-
8	-	-	-	-	-	0,5 - 5	-
9	-	-	-	-	-	5 - 10	-
X	-	-	-	> 10	-	> 10	> 10

Specifying air purity in accordance with ISO8573-1:2010
When specifying the purity of air required, the standard must always be referenced, followed by the purity class selected for each contaminant (a different purity class can be selected for each contamination if required).
An example of how to write an air quality specification is shown below:

ISO 8573-1:2010 Class 1.2.1
ISO 8573-1:2010 refers to the standard document and its revision, the three digits refer to the purity classifications selected for solid particulate, water and total oil. Selecting an air purity class of 1.2.1 would specify the following air quality when operating at the standard's reference conditions:

Class 1 - Particulate
In each cubic metre of compressed air, the particulate count should not exceed 20,000 particles in the 0.1 - 0.5 micron size range, 400 particles in the 0.5 - 1 micron size range and 10 particles in the 1 - 5 micron size range.

Class 2 - Water
A pressure dewpoint (PDP) of -40°C or better is required and no liquid water is allowed.

Class 1 - Oil
In each cubic metre of compressed air, not more than 0.01mg of oil is allowed. This is a total level for liquid oil, oil aerosol and oil vapour.

ISO8573-1:2010 Class zero

- **Class 0 does not mean zero contamination.**
- **Class 0 requires the user and the equipment manufacturer to agree contamination levels as part of a written specification.**
- **The agreed contamination levels for a Class 0 specification should be within the measurement capabilities of the test equipment and test methods shown in ISO8573 Pt 2 to Pt 9.**
- **The agreed Class 0 specification must be written on all documentation to be in accordance with the standard.**
- **Stating Class 0 without the agreed specification is meaningless and not in accordance with the standard.**
- **A number of compressor manufacturers claim that the delivered air from their oil-free compressors is in compliance with Class 0.**
- **If the compressor was tested in clean room conditions, the contamination detected at the outlet will be minimal. Should the same compressor now be installed in typical urban environment, the level of contamination will be dependent upon what is drawn into the compressor intake, rendering the Class 0 claim invalid.**
- **A compressor delivering air to Class 0 will still require purification equipment in both the compressor room and at the point of use for the Class 0 purity to be maintained at the application.**
- **Air for critical applications such as breathing, medical, food, etc typically only requires air quality to Class 2.2.1 or Class 2.1.1.**
- **Purification of air to meet a Class 0 specification is only cost effective if carried out at the point of use.**

www.parker.com

European Headquarters
La Tuilière 6, 1163 Etoy,
Switzerland
Tel: +41 21 821 85 00

Your authorized Distributor

© 2023 Parker Hannifin Corporation. All rights reserved. Catalogue PDE2535TC/UK 08/2023