Relief Valves

Medium Pressure, High Pressure, and NPT Inlet Options to 75,000 psi

RVP/PRVP and RVS/PRVS Series



Principle of Operation:

Parker Autoclave Engineers relief valves are designed to open proportionally to increasing pressure. Therefore, they are not recommended for applications requiring immediate full valve flow at set pressure and should not be considered a "Safety Valve". Full flow of relief valve is defined as 110% of set pressure.

RVP Metal Seat Relief Valve:

Series RVP relief valves provide reliable venting of gases or liquids for set pressures from 3,000 psi (205 bar) minimum to 75,000 psi (5170 bar). The standard temperature range for all models is -423° to 400°F (-252° to 204°C). A high temperature option to 750°F (399°C) is also available.

These precision valves are designed for pressure gas systems, cryogenic systems, petrochemical applications and other special systems. Capable of handling air, gases, steam, vapor and liquids, they are however, not recommended for steam boiler applications nor are they ASME code stampable (K-Factors are not available).

RVS Soft Seat Relief Valve:

Series RVS relief valves utilize a PEEK soft seat design for reliable venting of gases at set pressures from 1,500 psi (103 bar) to 20,000 psi (1380 bar). The operating temperature range is -50° to 400°F (-46° to 204°C).

The soft seat design provides bubble tight sealing, repeatable pop-off, and reseat. Additionally, soft seat valves provide a higher cycle life than metal seat relief valves.

These precision valves are designed for gases and liquid systems where zero leakage is critical.
They are not recommended for liquefied gases which produce gas at cryogenic temperatures below -50°F upon relief.

Parker Autoclave Engineers

ENGINEERING YOUR SUCCESS.

Tel: +45 63 12 83 00 | Email: ps@hymatik.com | www.hymatik.com | Hvidkaervej 27a, DK-5250 Odense SV, Denmark

Relief Valves: Pressures to 75,000 psi (5170 bar)

Features and Benefits:

Material:
Standard models of Relief Valves are constructed of UNS S31600, 316 cold worked stainless steel with selected components made of anti-galling stainless steel material for optimum economy and ruggedness.

Connections:
Cone and Thread versions (RVP & RVS Series):
Models 5, 10, and 20RVS Series = SF562C 9/16" Medium Pressure Cone & Thread Connection
Models 5, 10, 15, and 20RVP = SF562C 9/16" Medium Pressure Cone & Thread Connection
Models 30, 45, and 60 RVP = F375C 3/8" High Pressure Cone & Thread Connection
Model 75RVP = F312C150 5/16" Ultra-High Pressure Cone & Thread Connection
NPT Inlet Versions (PRVP & PRVS Series):
Models 5, 10 and 15 PRVS and PRVP Series = 1/2" NPT

The outlet connection on all models is a female 3/4” NPT. While adapters to other sizes and connection types are available, they must be sized for specific flow requirements. Outlet pressure cannot exceed 500 psi (35 bar) in all pressure ranges.

Orifice Sizes:
Orifice diameters range from .062 (1.57mm) to .312" (7.92mm). (See chart on page 5 for list of valve orifice options)

Full Lift for Full Flow:
These relief valves are designed to open as a function of increasing system pressure. Proper spring selection assures repeatability of opening, full lift and flow, and reseat pressures.

Reliability and Long Service Life:
Materials engineering and stringent quality control procedures combine to assure the highest quality, reliability and service life. Each valve is preset and factory sealed to ensure proper valve operation. Note: Mount as far from Pump Outlet as possible to avoid premature relief and extend valve life.

Setpoint Accuracy:
Setpoint Accuracy is ±3%.
Re-Seat Pressure: 85% of set pressure

High Set Pressure Capability:
Unique seat construction plus over-the-nozzle guiding and proper selection of materials permits standard set pressures to 75,000 psi. (5170 bar).

Dependable Shut-Off:
Series RVP/PRVP relief valves are designed to provide shut-off of liquids and gases under pressure to commercial tightness standards. Series RVS/PRVS relief valves are designed to provide bubble tight shut off of gases and liquids.

Fewer Parts, Ease of Maintenance:
Engineered to perform with fewer basic components, both RVP/PRVP and RVS/PRVS valves facilitate minimum stocking of spare parts and ease of maintenance. The combined angle seat in the RVP/PRVP series eliminates the need for lapping in rework.

Special Requirements:
Most models available with CE Mark/PED Approval (PRVP and PRVS are exception) to Category IV.
SOG (NACE MR0175) option available upon request.

Tel: +45 63 12 83 00 | Email: ps@hymatik.com | www.hymatik.com | Hvidkaervej 27a, DK-5250 Odense SV, Denmark

Relief Valves: Pressures to 75,000 psi (5170 bar)

Options:

Parker Autoclave Engineers can supply various options on special order. A high temperature option is also available for temperatures to 750°F (399°C) for RVP or PRVP models. To specify high temperature option: Add suffix "**HT**" for 750°F (399°C) high temperature option.

Note: Pressure rating for elevated temperature based on derating curves. (See Technical Brochure).

Caution:

1. AE relief valves are preset and factory sealed. Warranty is voided if seal is broken by customer.
2. Maximum system operating pressure should not exceed 90% of relief valve set pressure. **Operating pressures in excess may cause weepage resulting in damage to the plug and seat.**
3. Relief Valves are not to be used as Pressure regulators, RVP has limited actuation life dependent on pressure.

Ordering Instructions:

To permit prompt and correct responses to your order, we will require the following information: quantity, valve catalog number, service requirements (liquid, gas & vapor), set pressure (PSIG - bar), and service temperature range.

Gas Flow Curves (SCFM of Nitrogen)

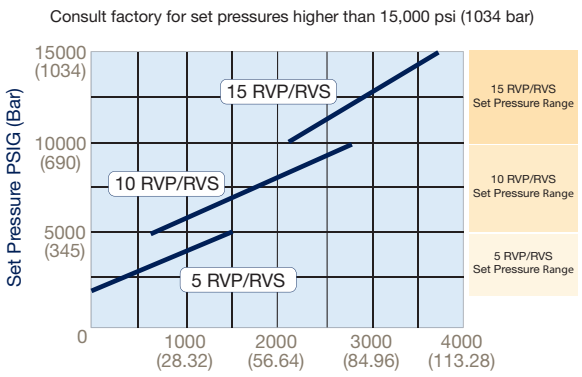

Liquid Flow Curves (Water)

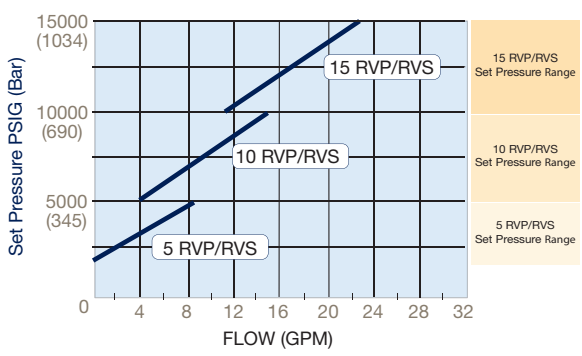

All models are designed primarily for thermal expansion or low volume relief applications at high pressures where flow is not critical.

Note: Curves on this page are based on capacities of valves only and do not take tubing into account.

Caution should be exercised in proper selection of medium pressure tubing based on actual operating conditions. Two series available: 15,000 (1035 bar) and 20,000 (1380 bar).

Tel: +45 63 12 83 00 | Email: ps@hymatik.com | www.hymatik.com | Hvidkaervej 27a, DK-5250 Odense SV, Denmark

Relief Valves: Pressures to 75,000 psi (5170 bar)

Relief Valve Dimensions and Details:

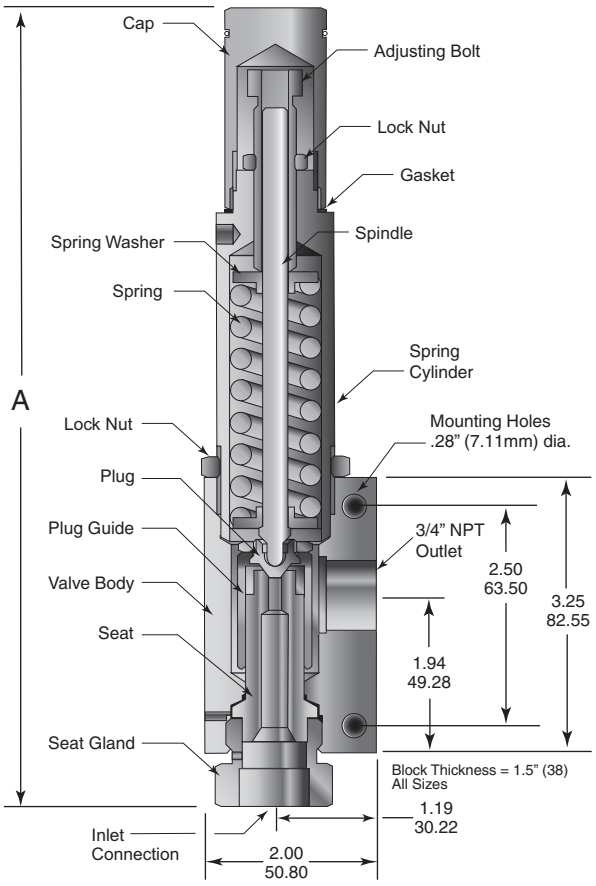

Figure 1
RVP/PRVP Series (Metal Seat)

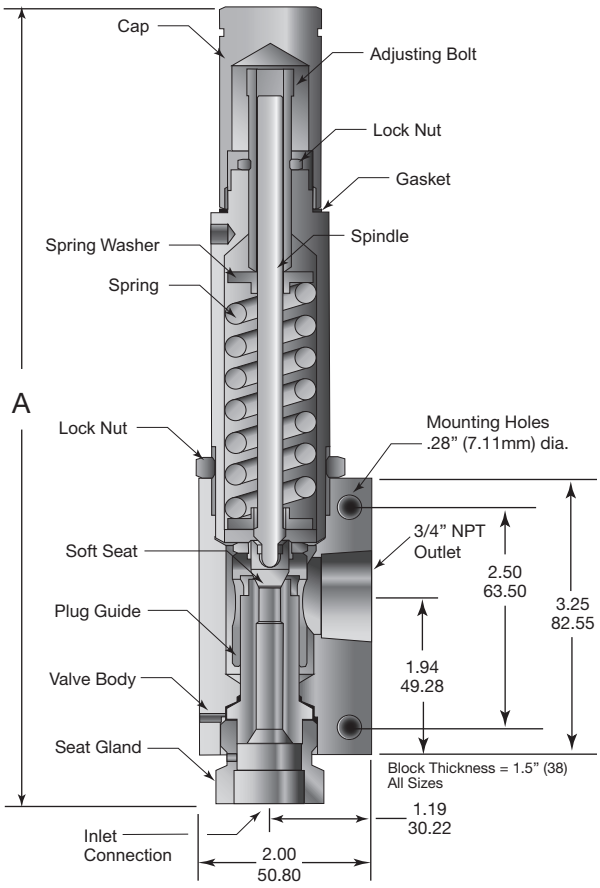

Figure 2
RVS/PRVS Series (Soft Seat)

Note: For "A" dimension please reference the "Ordering and Specifications" table on Page 5.

Tel: +45 63 12 83 00 | Email: ps@hymatik.com | www.hymatik.com | Hvidkaervej 27a, DK-5250 Odense SV, Denmark

Relief Valves: Pressures to 75,000 psi (5170 bar)

Ordering and Specifications:

FIGURE 1: RVP & PRVP Metal Seat Series Relief Valve (PRVP is NPT Inlet version)

Catalog Number*	Connection Size and Type		Orifice Diameter Inches (mm)	Pressure Rating psi (bar) @ 100ºF (38ºC)			Dimension Inches (mm)	Repair Kit[1]
	Inlet Connection	Outlet Connection		Minimum Setting	Maximum Setting	Maximum Back Pressure	"A"	
5PRVP8072	1/2" FNPT	3/4 FNPT	0.312 (7.92)	3,000 (210)	5,000 (345)	500 (35)	10.47 (266)	R5PRVP
10PRVP8072	1/2" FNPT	3/4 FNPT	0.250 (6.35)	5,000 (345)	10,000 (690)	500 (35)	10.47 (266)	R10PRVP
15PRVP8072	1/2" FNPT	3/4 FNPT	0.188 (4.78)	10,000 (690)	15,000 (1035)	500 (35)	10.47 (266)	R15RVP
5RVP9072	SF562CX (9/16" MP)	3/4 FNPT	0.312 (7.92)	3,000 (210)	5,000 (345)	500 (35)	9.40 (238)	R5RVP
10RVP9072	SF562CX (9/16" MP)	3/4 FNPT	0.250 (6.35)	5,000 (345)	10,000 (690)	500 (35)	9.40 (238)	R10RVP
15RVP9072	SF562CX (9/16" MP)	3/4 FNPT	0.188 (4.78)	10,000 (690)	15,000 (1035)	500 (35)	9.40 (238)	R15RVP
20RVP9072	SF562CX (9/16" MP)	3/4 FNPT	0.156 (3.96)	15,000 (1035)	20,000 (1380)	500 (35)	9.40 (238)	R20RVP
30RVP6072	F375C (3/8" HP)	3/4 FNPT	0.125 (3.18)	15,000 (1035)	30,000 (2070)	500 (35)	9.52 (241)	R30RVP
45RVP9072	F562C (9/16" HP)	3/4 FNPT	0.093 (2.36)	25,000 (1725)	45,000 (3100)	500 (35)	9.52 (241)	R45RVP
60RVP6072	F375C (3/8" HP)	3/4 FNPT	0.078 (1.98)	30,000 (2070)	60,000 (4140)	500 (35)	9.52 (241)	R60RVP
75RVP5072	F312C150 (5/16" UHP)	3/4 FNPT	0.062 (1.57)	37,000 (2550)	75,000 (5170)	500 (35)	9.83 (249)	R75RVP

FIGURE 2: RVS & PRVS Soft Seat Series Relief Valve (PRVS is NPT Inlet version)

Catalog Number*	Connection Size and Type		Orifice Diameter Inches (mm)	Pressure Rating psi (bar) @ 100ºF (38ºC)			Dimension Inches (mm)	Repair Kit[1]
	Inlet Connection	Outlet Connection		Minimum Setting	Maximum Setting	Maximum Back Pressure	"A"	
5PRVS8072	1/2" FNPT	3/4 FNPT	0.312 (7.92)	1,500 (103)	5,000 (345)	500 (35)	10.47 (266)	R5PRVS
10PRVS8072	1/2" FNPT	3/4 FNPT	0.250 (6.35)	5,000 (345)	10,000 (690)	500 (35)	10.47 (266)	R10PRVS
15PRVS8072	1/2" FNPT	3/4 FNPT	0.188 (4.78)	10,000 (690)	15,000 (1035)	500 (35)	10.47 (266)	R15PRVS
5RVS9072	SF562CX (9/16" MP)	3/4 FNPT	0.312 (7.92)	1,500 (105)	5,000 (345)	500 (35)	9.40 (238.76)	R5RVS
10RVS9072	SF562CX (9/16" MP)	3/4 FNPT	0.250 (6.35)	5,000 (345)	10,000 (690)	500 (35)	9.40 (238.76)	R10RVS
20RVS9072	SF562CX (9/16" MP)	3/4 FNPT	0.156 (3.96)	10,000 (690)	20,000 (1378)	500 (35)	9.40 (238.76)	R20RVS

* Maximum pressure rating based on the lowest rating of any component. Actual working pressure may be determined by tubing pressure rating, if lower. Note: For pressure rating see selection chart.

[1] Include suffix from original valve for correct options

Suffix	Relief Valve Options (add as suffix to Catalog number listed above)
HT	High Temperature Spring to 750°F (399°C) (RVP or PRVP Series only)
K	Antivibration Gland Fitting (Cone & Thread Connections)
HYG (RVS Only)	Modified for use with Hydrogen/Helium (seat surface and helium seat tested - no material changes)
CE	CE Mark/PED Category IV (not available with PRVP or PRVS models)
SOG	Materials used are NACE Capable & Hardness verified (Maximum pressure reduction possible)
2507	UNS S32750 2507 Super Duplex Wetted Materials
HC	UNS N10276 Hastelloy C-276 Wetted Materials
IN625	UNS N06625 Inconel 625 Wetted Materials

(See "Technical Brochure" for Pressure/Temperature effect on temperatures above ambient.)

Note: use of optional material only changes "wetted parts" to selected material. Items like collars and glands remain CW 316/316L SS. Use -**SOG** (Includes hardness check for NACE) or **-AP** suffix

Tel: +45 63 12 83 00 | Email: ps@hymatik.com | www.hymatik.com | Hvidkaervej 27a, DK-5250 Odense SV, Denmark

Relief Valves: Pressures to 75,000 psi (5170 bar)

Cone and Thread Version: RVP Series

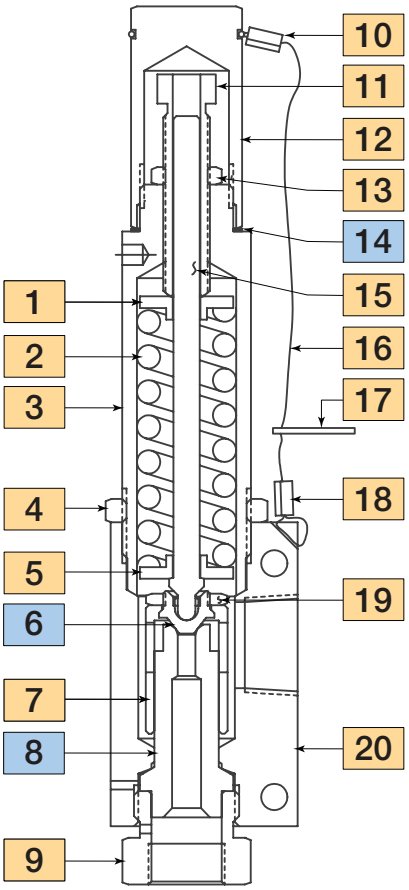

Material of Construction:

Item #	Description	Material
1	Spring Washer	316 SS
2	Spring	316 SS
3	Spring Cylinder	316 SS
4	Lock Nut	316 SS
5	Spring Washer	316 SS
6	Plug	316 SS
7	Plug Guide	Nitronic 60
8	Seat	316 SS
9	Seat Gland	316 SS
10	Splicing Sleeve	-
11	Adjusting Bolt	Nitronic 60
12	Cap	316 SS
13	Lock Nut	316 SS
14	Gasket	302/304 Annealed
15	Spindle	316 SS
16	Cable, 1/16" Dia.	300 Series SS
17	Nameplate	300 Series SS
18	Splicing Sleeve	-
19	Lock Nut	316 SS
20	Valve Body	316 SS

Typical spare parts found in Repair Kits listed on page 5

Tel: +45 63 12 83 00 | Email: ps@hymatik.com | www.hymatik.com | Hvidkaervej 27a, DK-5250 Odense SV, Denmark

Relief Valves: Pressures to 75,000 psi (5170 bar)

Cone and Thread Version: RVS Series

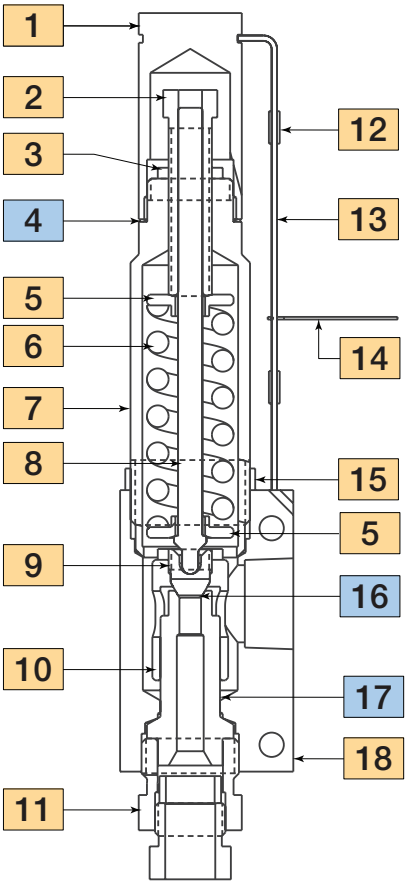

Material of Construction:

Item #	Description	Material
1	Cap	300 Series SS
2	Adjusting Bolt	Nitronic 60
3	Lock Nut	316 SS
4	Gasket	304 SS Annealed
5	Spring Washer	316 SS
6	Spring	316 SS
7	Spring Cylinder	316 SS
8	Spindle	316 SS
9	Plug Gland	316 SS
10	Plug Guide	Nitronic 60
11	Seat Gland	316 SS
12	Splicing Sleeve	316 SS
13	Cable	316 SS
14	Nameplate	304 SS
15	Lock Nut	316 SS
16	Soft Seal	Arlon 1260
17	Seat	316 SS
18	Body	316 SS

Typical spare parts found in Repair Kits listed on page 5

Relief Valves: Pressures to 75,000 psi (5170 bar)

NPT Version: PRVP Series

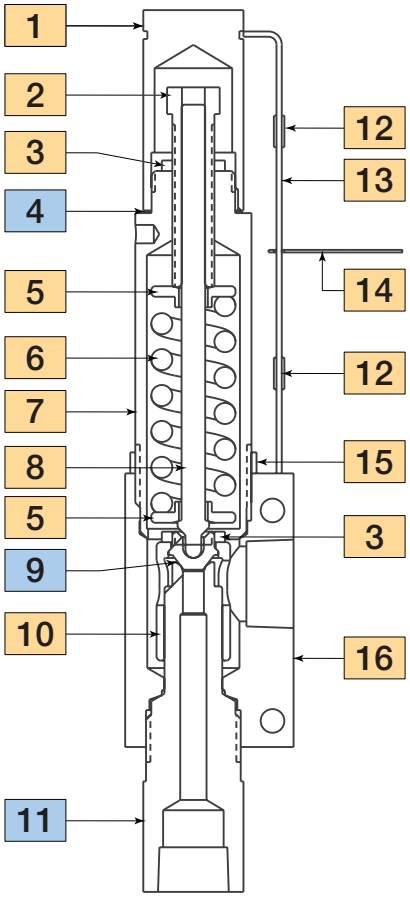

Material of Construction:

Item #	Description	Material
1	Cap	316 SS
2	Adjusting Bolt	Nitronic 60
3	Lock Nut	316 SS
4	Gasket	304 SS Annealed
5	Spring Washer	316 SS
6	Spring	316 SS
7	Spring Cylinder	316 SS
8	Spindle	316 SS
9	Plug	316 SS
10	Plug Guide	Nitronic 60
11	Seat Gland	316 SS
12	Splicing Sleeve	316 SS
13	Cable	316 SS
14	Nameplate	304 SS
15	Lock Nut	316 SS
16	Valve Body	316 SS

Typical spare parts found in Repair Kits listed on page 5.

Tel: +45 63 12 83 00 | Email: ps@hymatik.com | www.hymatik.com | Hvidkaervej 27a, DK-5250 Odense SV, Denmark

Relief Valves: Pressures to 75,000 psi (5170 bar)

NPT Version: PRVS Series

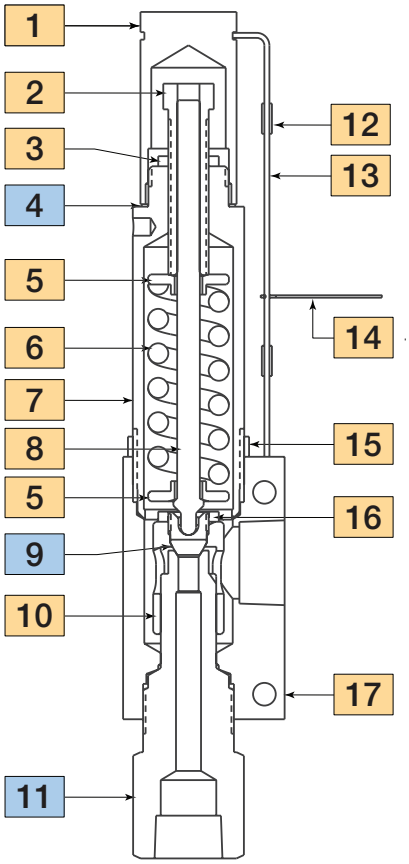

Material of Construction:

Item #	Description	Material
1	Cap	316 SS
2	Adjusting Bolt	Nitronic 60
3	Lock Nut	316 SS
4	Gasket	304 SS Annealed
5	Spring Washer	316 SS
6	Spring	316 SS
7	Spring Cylinder	316 SS
8	Spindle	316 SS
9	Soft Seat	Arlon 1263
10	Plug Guide	Nitronic 60
11	Seat	316 SS
12	Splicing Sleeve	316 SS
13	Cable	316 SS
14	Nameplate	304 SS
15	Lock Nut	316 SS
16	Lock Nut	316 SS
17	Body	316 SS

Typical spare parts found in Repair Kits listed on page 5.

Tel: +45 63 12 83 00 | Email: ps@hymatik.com | www.hymatik.com | Hvidkaervej 27a, DK-5250 Odense SV, Denmark

NOTES:



High Pressure
Valves • Fittings • Tubing
to 150,000 psi.



Reactors • Vessels
Instrumentation



Air Driven, High Flow,
High Pressure Liquid Pumps

THIS IS PARKER

Tel: +45 63 12 83 00 | Email: ps@hymatik.com | www.hymatik.com | Hvidkaervej 27a, DK-5250 Odense SV, Denmark

Parker's Motion & Control Technologies

At Parker, we're guided by a relentless drive to help our customers become more productive and achieve higher levels of profitability by engineering the best systems for their requirements. It means looking at customer applications from many angles to find new ways to create value. Whatever the motion and control technology need, Parker has the experience, breadth of product and global reach to consistently deliver. No company knows more about motion and control technology than Parker. For further information call 1-800-C-Parker.

MARKET	KEY MARKETS		KEY PRODUCTS	
 **AEROSPACE**	Aircraft Engines Commercial Commerical Transports Military Aircraft Regional Transports	Business and General Aviation Land-Based Weapons Systems Missiles and Launch Vehicles Unmanned Aerial Vehicles	Flight Control Systems & Components Fluid Conveyance Systems Fluid Metering Delivery & Atomization Devices Fuel Systems & Components	Hydraulic Systems & Components Inert Nitrogen Generating Systems Pneumatic Systems & Components Wheels & Brakes
 **CLIMATE CONTROL**	Agriculture Food, Beverage and Dairy Precision Cooling Transportation	Air Conditioning Life Sciences & Medical Processing	Co2 Controls Electronic Controllers Filter Driers Hand Shut-Off Valves Hose & Fittings	Pressure Regulating Valves Refrigerant Distributors Safety Relief Valves Solenoid Valves Thermostatic Expansion Valves
 **ELECTRO-MECHANICAL**	Aerospace Life Science & Medical Packaging Machinery Plastics Machinery & Converting Semiconductor & Electronics Factory Automation	Machine Tools Paper Machinery Primary Metals Textile Wire & Cable	AC/DC Drives & Systems Electric Actuators, Gantry Robots & Slides Electrohydrostatic Actuation Systems Electromechanical Actuation Systems Human Machine Interface	Linear Motors Stepper Motors, Servo Motors Drives & Controls Structural Extrusions
 **FILTRATION**	Food & Beverage Life Sciences Mobile Equipment Power Generation Transportation	Industrial Machinery Marine Oil & Gas Process	Analytical Gas Generators Compressed Air & Gas Filters Condition Monitoring Engine Air, Fuel & Oil Filtration & Systems	Hydraulic, Lubrication & Coolant Filters Process, Chemical, Water Microfiltration Filters Nitrogen, Hydrogen & Zero Air Generators
 **FLUID and GAS HANDLING**	Aerospace Agriculture Bulk Chemical Handling Construction Machinery Food & Beverage Fuel & Gas Delivery	Industrial Machinery Mobile Oil & Gas Transportation Welding	Brass Fittings & Valves Diagnostic Equipment Fluid Conveyance Systems Industrial Hose	PTFE & PFA Hose, Tubing & Plastic Fittings Rubber & Thermoplastic Hose & Couplings Tube Fittings & Adapters Quick Disconnects
 **HYDRAULICS**	Aerospace Aerial lift Agriculture Construction Machinery Forestry	Industrial Machinery Mining Oil & Gas Power Generation & Energy Truck Hydraulics	Diagnostic Equipment Hydraulic Cylinders & Accumulators Hydraulic Motors & Pumps Hydraulic Systems Hydraulic Valves & Controls	Power Take-Offs Rubber & Thermoplastic Hose & Couplings Tube Fittings & Adapters Quick Disconnects
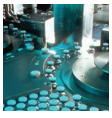 **PNEUMATICS**	Aerospace Conveyor & Material Handling Factory Automation Life Science & Medical	Machine Tools Packaging Machinery Transportation & Automotive	Air Preparation Brass Fittings & Valves Manifolds Pneumatic Accessories Pneumatic Actuators & Grippers Pneumatic Valves & Controls	Quick Disconnects Rotary Actuators Rubber & Thermoplastic Hose & Couplings Structural Extrusions Thermoplastic Tubing & Fittings Vacuum Generators, Cups & Sensors
 **PROCESS CONTROL**	Chemical & Refining Food, Beverage & Dairy Medical & Dental	Microelectronics Oil & Gas Power Generation	Analytical Sample Conditioning Products & Systems Fluoropolymer Chemical Delivery Fittings, Valves & Pumps High Purity Gas Delivery Fittings, & Valves & Regulators	Instrumentation Fittings, Valves Regulators Medium Pressure Fittings & Valves Process Control Manifolds
 **SEALING and SHIELDING**	Aerospace Chemical Processing Consumer Energy, Oil & Gas Fluid Power General Industrial	Information Technology Life Sciences Military Semiconductor Transportation	Dynamic Seals Elastomeric O-Rings Emi Shielding Extruded & Precision-Cut, Fabricated Elastomeric Seals	Homogeneous & Inserted Elastomeric Shapes High Temperature Metal Seals Metal & Plastic Retained Composite Seals Thermal Management

Tel: +45 63 12 83 00 | Email: ps@hymatik.com | www.hymatik.com | Hvidkaervej 27a, DK-5250 Odense SV, Denmark

Parker Worldwide

North America

USA – Corporate, Cleveland, OH
Tel: +1 256 896 3000

USA – IPD, Huntsville, AL
Tel: +1 256 881 2040
ipdcct@parker.com

USA – IPD, (Autoclave), Erie, PA
Tel: +1 814 860 5700
ipdaecct@parker.com

CA – Canada, Grimsby, Ontario
Tel +1 905-945-2274
ipd_canada@parker.com

South America

AR – Argentina, Buenos Aires
Tel: +54 3327 44 4129
falecom@parker.com

BR – Brazil, Diadema, SP
Diadema, SP
Tel: +55 11 4360 6700
falecom@parker.com

CL – Chile, Santiago
Tel: +56 (0) 2 2303 9640
falecom@parker.com

MX – Mexico, Toluca
Tel: +52 722 275 4200
contacto@parker.com

Asia Pacific

AU – Australia, Dandenong
Tel: +61 (0)2 9842 5150
customer.service.au@parker.com

CN – China, Shanghai
Tel: +86 21 2899 5000
INGtechnical.china@parker.com

HK – Hong Kong
Tel: +852 2428 8008

IN – India, Mumbai
Tel: +91 22 6513 7081-85

ID – Indonesia, Tangerang
Tel: +62 2977 7900
parker.id@parker.com

JP – Japan, Tokyo
Tel: +(81) 3 6365 4020
infophj@parker.com

KR – South Korea, Seoul
Tel: +82 2 559 0400
parkerkr@parker.com

MY – Malaysia, Selangor
Tel: +603 784 90 800
parkermy@parker.com

SG – Singapore,
Tel: +65 6887 6300
parkersg@parker.com

TH – Thailand, Bangkok
Tel: +66 2 186 7000
phthailand@parker.com

TW – Taiwan, Taipei
Tel: +886 2 2298 8987
enquiry.taiwan@parker.com

VN – Vietnam, Hochi Minh City
Tel: +848 382 508 56
parker_viet@parker.com

Europe, Middle East, Africa

AE – UAE, Dubai
Tel: +971 4 812 7100
parker.me@parker.com

AT – Austria, Wiener Neustadt
Tel: +43 (0)2622 23501-0
parker.austria@parker.com

AT – Eastern Europe, Wiener Neustadt
Tel: +43 (0)2622 23501 900
parker.easteurope@parker.com

AZ – Azerbaijan, Baku
Tel: +994 50 2233 458
parker.azerbaijan@parker.com

BE/LU – Belgium, Nivelles
Tel: +32 (0)67 280 900
parker.belgium@parker.com

BG – Bulgaria, Sofia
Tel: +359 2 980 1344
parker.bulgaria@parker.com

BY – Belarus, Minsk
Tel: +48 (0)22 573 24 00
parker.belarus@parker.com

CH – Switzerland, Etoy
Tel: +41 (0) 21 821 87 00
parker.switzerland@parker.com

CZ – Czech Republic, Klecany
Tel: +420 284 083 111
parker.czechrepublic@parker.com

DE – Germany, Kaarst
Tel: +49 (0)2131 4016 0
parker.germany@parker.com

DK – Denmark, Ballerup
Tel: +45 43 56 04 00
parker.denmark@parker.com

ES – Spain, Madrid
Tel: +34 902 33 00 01
parker.spain@parker.com

FI – Finland, Vantaa
Tel: +358 (0)20 753 2500
parker.finland@parker.com

FR – France, Contamine s/Arve
Tel: +33 (0)4 50 25 80 25
parker.france@parker.com

GR – Greece, Athens
Tel: +30 210 933 6450
parker.greece@parker.com

HU – Hungary, Budapest
Tel: +36 223 885 470
parker.hungary@parker.com

IE – Ireland, Dublin
Tel: +353 (0)1 466 6370
parker.ireland@parker.com

IT – Italy, Corsico (MI)
Tel: +39 02 45 19 21
parker.italy@parker.com

KZ – Kazakhstan, Almaty
Tel: +7 7273 561 000
parker.easteurope@parker.com

NL – The Netherlands, Oldenzaal
Tel: +31 (0)541 585 000
parker.nl@parker.com

NO – Norway, Stavanger
Tel: +47 66 75 34 00
parker.norway@parker.com

PL – Poland, Warsaw
Tel: +48 (0)22 573 24 00
parker.poland@parker.com

PT – Portugal, Leca da Palmeira
Tel: +351 22 999 7360
parker.portugal@parker.com

RO – Romania, Bucharest
Tel: +40 21 252 1382
parker.romania@parker.com

RU – Russia, Moscow
Tel: +7 495 645-2156
parker.russia@parker.com

SE – Sweden, Spånga
Tel: +46 (0)8 59 79 50 00
parker.sweden@parker.com

SK – Slovakia, Banská Bystrica
Tel: +421 484 162 252
parker.slovakia@parker.com

SL – Slovenia, Novo Mesto
Tel: +386 7 337 6650
parker.slovenia@parker.com

TR – Turkey, Istanbul
Tel: +90 216 4997081
parker.turkey@parker.com

UA – Ukraine, Kiev
Tel: +48 (0)22 573 24 00
parker.ukraine@parker.com

UK – United Kingdom, Warwick
Tel: +44 (0)1926 317 878
parker.uk@parker.com

ZA – South Africa, Kempton Park
Tel: +27 (0)11 961 0700
parker.southafrica@parker.com

! CAUTION !

Do not mix or interchange component parts or tubing with those of other manufacturers. Doing so is unsafe and will void warranty.

Parker Autoclave Engineers Valves, Fittings, and Tools are not designed to interface with common commercial instrument tubing and are designed to only connect with tubing manufactured to Parker Autoclave Engineers AES specifications. Failure to do so is unsafe and will void warranty.

WARNING

FAILURE, IMPROPER SELECTION OR IMPROPER USE OF THE PRODUCTS AND/OR SYSTEMS DESCRIBED HEREIN OR RELATED ITEMS CAN CAUSE DEATH, PERSONAL INJURY AND PROPERTY DAMAGE.

This document and other information from Parker Hannifin Corporation, its subsidiaries and authorized distributors provide product and/or system options for further investigation by users having technical expertise. It is important that you analyze all aspects of your application and review the information concerning the product or system in the current product catalog. Due to the variety of operating conditions and applications for these products or systems, the user, through its own analysis and testing, is solely responsible for making the final selection of the products and systems and assuring that all performance, safety and warning requirements of the application are met. The products described herein, including without limitation, product features, specifications, designs, availability and pricing, are subject to change by Parker Hannifin Corporation and its subsidiaries at any time without notice.

Offer of Sale

The items described in this document are available for sale by Parker Hannifin Corporation, its subsidiaries or its authorized distributors. Any sale contract entered by Parker will be governed by the provisions stated in Parker's standard terms and conditions of sale (copy available upon request).

©2023 Parker Hannifin Corporation | Autoclave Engineers is a registered trademark of the Parker Hannifin Corporation

Literature #: 02-0129SE May 2023

Instrumentation Products Division
Autoclave Engineers Operation
8325 Hessinger Drive
Erie, PA 16509-4679
Tel: 814 860 5700
Fax: 814 860 5811

Instrumentation Products Division
Division Headquarters
1005 A Cleaner Way
Huntsville, AL 35805 USA
Tel: 256 881 2040
Fax: 256 881 5072

www.parker.com/ipd

ISO-9001 Certified