


# AIR PREPARATION SYSTEM P3Z SERIES

Modular SAE Flanges

Tel: +45 63 12 83 00 | Email: ps@hymatik.com | www.hymatik.com | Hvidkaervej 27a, DK-5250 Odense SV, Denmark

# Table of Contents

Regulator ..... 3-4
Accessories ..... 5



If you have questions about the products contained in this catalog, or their applications, please contact:
**Parker Hannifin EMEA Sàrl European Headquarters**
parker.com/msge

Extra care is taken in the preparation of this literature, but Parker is not responsible for any inadvertent typographical errors or omissions. Information in this catalog is only accurate as of the date of publication. For a more current information base, please consult the division web site at parker.com/msge.

***WARNING — USER RESPONSIBILITY***

**FAILURE OR IMPROPER SELECTION OR IMPROPER USE OF THE PRODUCTS DESCRIBED HEREIN OR RELATED ITEMS CAN CAUSE DEATH, PERSONAL INJURY AND PROPERTY DAMAGE.**

- This document and other information from Parker-Hannifin Corporation, its subsidiaries and authorized distributors provide product or system options for further investigation by users having technical expertise.
- The user, through its own analysis and testing, is solely responsible for making the final selection of the system and components and assuring that all performance, endurance, maintenance, safety and warning requirements of the application are met. The user must analyze all aspects of the application, follow applicable industry standards, and follow the information concerning the product in the current product catalog and in any other materials provided from Parker or its subsidiaries or authorized distributors.
- To the extent that Parker or its subsidiaries or authorized distributors provide component or system options based upon data or specifications provided by the user, the user is responsible for determining that such data and specifications are suitable and sufficient for all applications and reasonably foreseeable uses of the components or systems.

***SALE CONDITIONS***

The items described in this document are available for sale by Parker Hannifin Corporation, its subsidiaries or its authorized distributors. Any sale contract entered into by Parker will be governed by the provisions stated in Parker's standard terms and conditions of sale (copy available upon request).



Tel: +45 63 12 83 00 | Email: ps@hymatik.com | www.hymatik.com | Hvidkaervej 27a, DK-5250 Odense SV, Denmark

# REGULATORS GENERAL INFORMATION



## Symbol

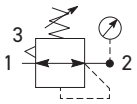


Self relieving regulator with gauge

- Flanged 1-1/2" or 2" ports (BSPP)
- Robust die-cast aluminium construction
- Secondary pressure ranges 8 & 16 bar
- Rolling diaphragm for extended life
- Secondary aspiration plus rolling diaphragm provides quick response and accurate pressure regulation
- A small permanent air consumption is required for good regulation accuracy

## Options:

| P3ZRA | | | | B | | | N |
|---|---|---|---|---|---|---|---|
| SAE Mtg - No thread | 0 | None | 0 | Relieving | B | N | 0 - 8 bar No Gauge N |
| | | | | | | | 0 -16 bar No Gauge H |
| | | | | | | P | External air pilot P |

| Port size | Description | Order Code | Flow $dm^3/s$ * | Max bar | Min temp °C | Max temp °C | Height mm | Width mm | Depth mm | Weight kg |
|---|---|---|---|---|---|---|---|---|---|---|
| - | 8 bar relieving | **P3ZRA00BNNN** | >666 | 17.5 | 0 | 60 | 230 | 180 | 132 | 3.5 |
| - | 16 bar relieving | **P3ZRA00BNHN** | >666 | 17.5 | 0 | 60 | 230 | 180 | 132 | 3.5 |
| - | Air Pilot | **P3ZRA00BPPN** | >666 | 17.5 | 0 | 60 | 182 | 180 | 132 | 3.4 |

* flow with 10 bar inlet 6,3 bar set pressure and 1 bar pressure drop.



Tel: +45 63 12 83 00 | Email: ps@hymatik.com | www.hymatik.com | Hvidkaervej 27a, DK-5250 Odense SV, Denmark

## Technical Information

| | |
|---|---|
| Fluid: | Compressed air |
| Maximum inlet pressure*: | 17.5 bar |
| Temperature range*: | 0°C to +60°C |
| Typical flow with 10 bar inlet pressure, 8 bar set pressure and 1 bar pressure drop: | 2" size >666 $dm^3/s$ |
| Gauge port ( x 2 ): | 1/4" |

* Air supply must be dry enough to avoid ice formation at temperatures below +2°C

## Material Specification

| | |
|---|---|
| Body: | Aluminium |
| Bonnet: | Glass filled polyamide |
| Control Knob: | Glass filled polyamide |
| Valve: Brass / NBR | |
| Seals: | Nitrile NBR |
| Screws: | Steel / zinc plated |

## Dimensions (mm)

Pressure regulating valve, pilot operated with integrated pilot pressure regulating valve

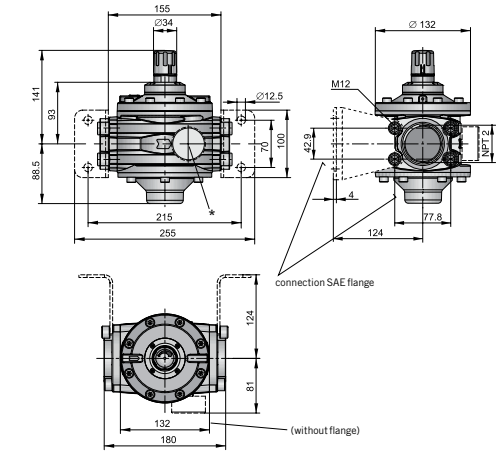


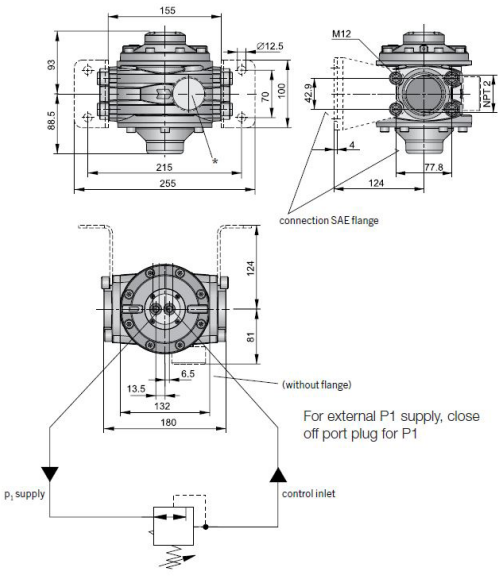


## Flow characteristics

Pressure regulating valve characteristics - (2") Pilot operated

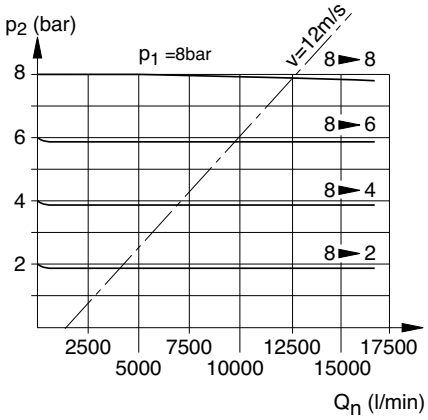




Tel: +45 63 12 83 00 | Email: ps@hymatik.com | www.hymatik.com | Hvidkaervej 27a, DK-5250 Odense SV, Denmark

# ACCESSORIES

## Connection Flange Kits

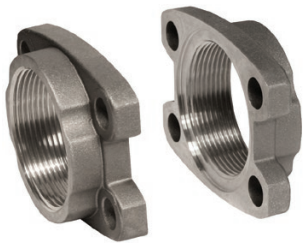

- To change port sizes connection flange kits are available, they are attached to any unit utilising the connecting kit.
- Allows assemblies to be removed from a hard piped system.

## Options:

| P3ZKA | | | CP |
|---|---|---|---|
| BSPP (G) | 1 | $1\frac{1}{2}$" | B |
| | | 2" | C |

## Material specification:

| | |
|---|---|
| Body: | Aluminium |
| Weight (kg): | 0.6 |



Tel: +45 63 12 83 00 | Email: ps@hymatik.com | www.hymatik.com | Hvidkaervej 27a, DK-5250 Odense SV, Denmark

Parker Hannifin Corporation
**Motion Systems Group Europe**
Parker Hannifin EMEA Sàrl European Headquarters
La Tuilière 6 Etoy
Switzerland CH-1163
www.parker.com

PDE2641TCUK 05/2024

Your Local Authorized Parker Distributor

© 2024 Parker Hannifin Corporation