

WEB VERSION

Parker Autoclave Medium and High Pressure Cone & Thread Product Catalog

Valves, Fittings, Tubing
20,000 psi and 150,000 psi Service

September, 2023

aerospace
climate control
electromechanical
filtration
fluid & gas handling
hydraulics
pneumatics
process control
sealing & shielding

Parker Autoclave Engineers

Instrumentation Products Division

needle valves

Tel: +45 63 12 83 00 | Email: ps@hymatik.com | www.hymatik.com | Hvidkaervej 27a, DK-5250 Odense SV, Denmark

Needle Valve

Low Pressure, Single Ferrule 15,000 psi (1034 bar)

10V2 and SW Series (“SpeedBite”)



Principle of Operation:

The Low Pressure (15,000 psi maximum), otherwise known as “SpeedBite” Needle Valves are designed for applications between traditional compression fittings and the Parker Autoclave Engineers’ Medium Pressure Cone and Thread products that are designed for high flow and high pressure. SpeedBite Valves are engineered for use with annealed ASTM A269 316 (and similar) Stainless Steel tubing designed by Parker Autoclave Engineers to a controlled hardness. SpeedBite valves employ a bite-type compression style single ferrule that is manually “set”. 1-1/4 rotation from tube grip forces the ferrule into tapered seat and causes the leading edge of ferrule to bite into the tubing, creating a shoulder for positive mechanical support of the tubing. When correctly installed, connection strength far exceeds the burst pressure of the tubing utilized.

Low Pressure Valve Features:

Temperature Rated -100°F (-73°C) to 650°F (343°C)

- Designed for use with Low Pressure “SpeedBite” single ferrule compression fittings and tubing
- 10V2 Series valve design provides for a 1/8" tube size connection
- SW Series valves are constructed for tube sizes from 1/4" to 1/2" OD
- UNS S31600 cold worked 316 SS body construction as standard. (Optional materials available)
- Non-rotating stem prevents stem/seat galling
- Metal-to-metal seating achieves bubble-tight shut-off, longer stem/seat life, greater durability for repeated on/off cycles and excellent corrosion resistance. These valves can be used with liquid and gas.
- PTFE packing below stem threads provides dependable stem and body sealing. Optional packing materials available.
- Choice of Vee (Shutoff) or Regulating (Flow Control) stem tips
- Optional N-Dura Stem and/or Replaceable Seat Coating or Stellite material option for severe service available
- Available in five body patterns

Traceability is ensured by use of heat and purchase order codes etched on valve body that also includes model number, MAWP rating, and material type references. All valves include compression sleeve and gland nut unless requested otherwise. Parker Autoclave Engineers’ valves are complemented by a complete line of low pressure fittings, tubing, check valves, relief valves, and line filters.

All Parker Autoclave Engineers products are designed in accordance with ASME B31.3 Chapter IX High Pressure Piping standards.

Parker Autoclave Engineers®

ENGINEERING YOUR SUCCESS.

10V2 and SW Series: Pressures to 15,000 psi (1034 bar)



Tube Outside Diameter Size (inches)	Connection Type	Orifice Size Inches (mm)	Rated C_V*	Pressure Rating psi (bar) @Room Temperature**
1/8 (10V2 Series)	W125	0.094 (2.39)	0.12	15,000 (1034)
1/4	SW250	0.188 (4.77)	0.65	15,000 (1034)
3/8	SW375	0.250 (6.35)	0.95	15,000 (1034)
1/2	SW500	0.375 (9.52)	1.90	10,000 (690)

Notes

* C_V values shown are for 2-way straight valve pattern. For 2-way angle patterns, increase C_V value 50%.

** Maximum Allowable Working Pressures decrease as temperatures increase see pressure/temperature rating guide in Technical Information section.

Formula for converting C_V to volumetric flow can be found in Technical Information section

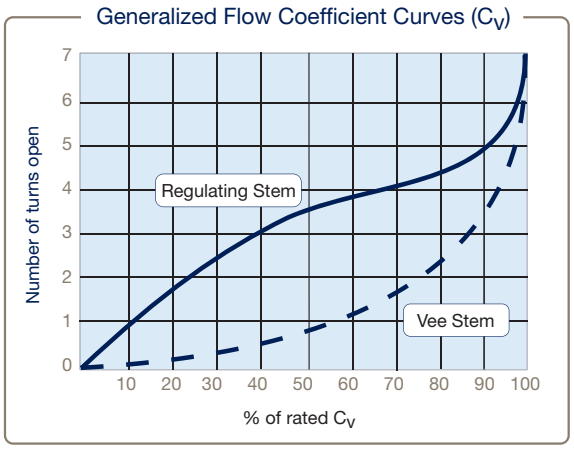

10V2 and SW Series Flow Curve for Vee and Regulating Stem Valves

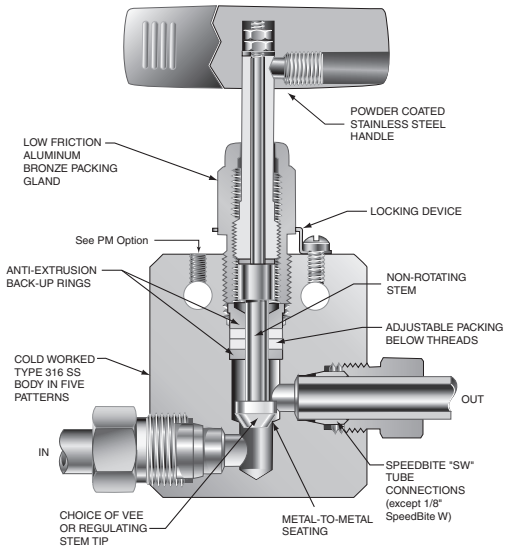

To ensure proper fit use Parker Autoclave tubing

Valve Packing Options:

Standard Parker Autoclave valves with PTFE packing may be operated from 0° (-18°C) to 450°F (232°C). Extreme temperature packing for service from -100°F (-73°C) to 650°F (343°C) by adding the following suffixes to catalog order number.

B Cryogenic trim materials and PTFE required when below 0°F (-18°C) -100°F (-73°C).

TG Standard valve with PTFE glass packing -100°F (-73°C) to 600°F (316°C). (See also -B option above when below 0°F (-18°C)

GY Standard valve with Graphite Yarn packing to 650°F (343°C).

Parker Autoclave Engineers does not recommend compression sleeve connections below -100°F (-73°C) or above 650°F (343°C). For additional valve options, contact your Sales Representative. (See "Technical Brochure" for Pressure/Temperature effect on temperatures above ambient.)

Tel: +45 63 12 83 00 | Email: ps@hymatik.com | www.hymatik.com | Hvidkaervej 27a, DK-5250 Odense SV, Denmark

Ordering Guide:

Common valve option details can be found on pages 6 & 7. The part number and option ordering matrix is given below. 10V/SW Series “SpeedBite” valves are furnished complete with connection components, unless otherwise specified.

Building a Part Number: *Example: SW4071*

Example Part Number:	SW	4	07	1	-	XX
Ordering Parameters/Options:	Valve Series	Outside Diameter Tube Size	Stem/Seat Type	Body Pattern		Options
Table Reference: (see below)	A	B	C	D		E

A - Valve Series	
10V	Low Pressure Needle Valve (1/8" Tube Size only)
SW	Low Pressure Needle Valve

B - Outside Diameter Tube Size	
2	1/8" (10V only)
4	1/4"
6	3/8"
8	1/2" (10,000 psi maximum)

C - Stem/Seal Type (see page 6 for optional Stem Types)	
07	Non-Rotating Vee Stem (on-off service)
08	Non-Rotating Regulating Stem (tapered tip for regulating and shutoff)
87	Vee Stem with Replaceable Seat
88	Regulating Stem with Replaceable Seat

Notes:
Valve Manuals can be found on our website at **www.Autoclave.com**.
Connection, Running and Seating Torques can be found in the product manual or in our Tools and Installation Catalog Section

Valves that have not been cycled for a substantial period of time may require higher initial actuation torque.

Speedbite connections are set by making 1-1/4 turns from WRENCH tight (point beyond finger tight where torque to tighten suddenly increases and sleeve begins to grip tubing.) Installation instructions can be found in Tools & Installation brochure.

*Replaceable seat option is sold with two (2) seat surfaces 180° apart.

D - Body Pattern	
1	Two-Way Straight
2	Two-Way Angle
3	Three-Way, Two on Pressure
4	Three-Way, One on Pressure
5	Three-Way, Two Stem Manifold Valve

E - Options (choose as many as necessary)	
For additional valve options see pages 6-7 or contact factory.	
B	All 316 SS materials required when below 0°F (-18°C)
TG	PTFE Glass (25%) Packing (to 600°F)
GY	Graphite Packing (to 650°F)
HC	Hastelloy C-276***
MO	Monel***

Note: Contact factory for 1/16” tube size or see MVE Series. Pneumatic and electric actuators are available for these valves, see associated brochures for details.

316 SS valve bodies are cold worked and not suitable for use in NACE (ISO 15156) applications. If required, contact factory for options.

*** Special Materials often have reduced MAWP ratings, see Technical brochure for assistance and for additional material options.

(See “Technical Brochure” for Pressure/Temperature effect on temperatures above ambient.)

Basic Repair Kits for 316 SS Material:

Stem Type		Basic Repair Kit for 316 SS Material			
		Outside Diameter Tube:			
		1/8” (10V2 Series)	1/4"	3/8"	1/2"
2 Way Straight / 2 Way Angle / 3 Way	VEE	R10V207	RSW407	RSW607	RSW807
	REG	R10V208	RSW408	RSW608	RSW808
2 Way, Replaceable Seat and Stem	VEE	R10V2872	RSW4872	RSW6872	RSW8872
	REG	R10V2882	RSW4882	RSW6882	RSW8882
3 Way, 2 Stem Manifold	VEE	R10V2075	RSW4075	RSW6075	RSW8075
	REG	R10V2085	RSW4085	RSW6085	RSW8085

When ordering for valves bought with additional suffix options, please include those exact suffix codes when ordering repair kit. (Example: the stem for a manual valve is manufactured differently for a pneumatically actuated valve and the repair kit must include the exact actuator suffix codes).
Valve Manuals can be found on our website at **www.Autoclave.com**.
Connection, Running and Seating Torques can be found in the product manual or in our Tools and Installation Catalog Section

Tel: +45 63 12 83 00 | Email: ps@hymatik.com | www.hymatik.com | Hvidkaervej 27a, DK-5250 Odense SV, Denmark

10V2 and SW Series Dimensions:

2 Way Straight

Stem Type	VEE REG	Catalog Number			
		10V2071 10V2081	SW4071 SW4081	SW6071 SW6081	SW8071 SW8081
Outside Diameter Tube		1/8 (3.18)	1/4 (6.35)	3/8 (6.35)	1/2 (12.70)
Orifice Diameter		0.094 (2.39)	0.187 (4.75)	0.250 (3.18)	0.375 (9.53)
Dimensions: inches (mm)	A	1.50 (38.10)	2.00 (50.80)	2.00 (50.80)	2.50 (63.50)
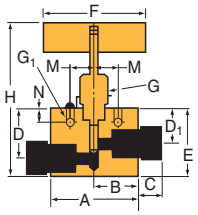	B	0.75 (19.05)	1.00 (25.40)	1.00 (25.40)	1.25 (31.75)
	C	0.31 (7.87)	0.38 (9.65)	0.47 (11.94)	0.53 (13.46)
	D	1.06 (26.92)	1.62 (41.15)	1.62 (41.15)	2.38 (60.45)
	D1	0.81 (20.57)	1.19 (30.23)	1.19 (30.23)	1.75 (44.45)
	E	1.38 (35.05)	2.00 (50.80)	2.00 (50.80)	2.88 (73.15)
	F	3.00 (76.20)	3.00 (76.20)	3.00 (76.20)	4.00 (101.60)
	G	0.62 (15.79)	0.75 (19.05)	0.75 (19.05)	1.00 (25.40)
	G1	0.17 (4.32)	0.22 (5.59)	0.22 (5.59)	0.34 (8.64)
	H*	3.75 (95.25)	4.50 (114.30)	4.50 (114.30)	5.95 (151.37)
	M	0.56 (14.22)	0.62 (15.75)	0.62 (15.75)	0.69 (17.53)
	N	0.31 (7.87)	0.38 (9.65)	0.38 (9.65)	0.50 (12.70)
Block Thickness		0.62 (15.75)	0.75 (19.05)	0.75 (19.05)	1.00 (25.40)

2 Way Angle

Stem Type	VEE REG	Catalog Number			
		10V2072 10V2082	SW4072 SW4082	SW6072 SW6082	SW8072 SW8082
Outside Diameter Tube		1/8 (3.18)	1/4 (6.35)	3/8 (6.35)	1/2 (12.70)
Orifice Diameter		0.094 (2.39)	0.187 (4.75)	0.250 (3.18)	0.375 (9.53)
Dimensions: inches (mm)	A	1.50 (38.10)	2.00 (50.80)	2.00 (50.80)	2.50 (63.50)
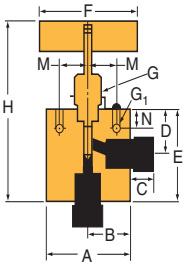	B	0.75 (19.05)	1.00 (25.40)	1.00 (25.40)	1.25 (31.75)
	C	0.31 (7.87)	0.38 (9.65)	0.47 (11.94)	0.53 (13.46)
	D	0.81 (20.57)	1.19 (30.23)	1.19 (30.23)	1.75 (44.45)
	D1	NA			
	E	1.56 (39.62)	2.43 (61.72)	2.19 (55.63)	3.38 (85.85)
	F	3.00 (76.20)	3.00 (76.20)	3.00 (76.20)	4.00 (101.60)
	G	0.62 (15.79)	0.75 (19.05)	0.75 (19.05)	1.00 (25.40)
	G1	0.17 (4.32)	0.22 (5.59)	0.22 (5.59)	0.34 (8.64)
	H*	3.94 (100.08)	5.00 (127.00)	5.00 (127.00)	6.45 (163.83)
	M	0.56 (14.22)	0.62 (15.75)	0.62 (15.75)	0.69 (17.53)
	N	0.31 (7.87)	0.38 (9.65)	0.38 (9.65)	0.50 (12.70)
Block Thickness		0.62 (15.75)	0.75 (19.05)	0.75 (19.05)	1.00 (25.40)

3 Way, 2 on Pressure

Stem Type	VEE REG	Catalog Number			
		10V2073 10V2083	SW4073 SW4083	SW6073 SW6083	SW8073 SW8083
Outside Diameter Tube		1/8 (3.18)	1/4 (6.35)	3/8 (6.35)	1/2 (12.70)
Orifice Diameter		0.094 (2.39)	0.187 (4.75)	0.250 (3.18)	0.375 (9.53)
Dimensions: inches (mm)	A	1.50 (38.10)	2.00 (50.80)	2.00 (50.80)	2.50 (63.50)
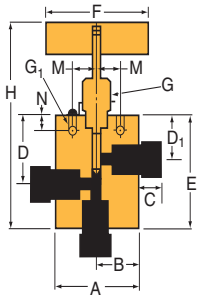	B	0.75 (19.05)	1.00 (25.40)	1.00 (25.40)	1.25 (31.75)
	C	0.31 (7.87)	0.38 (9.65)	0.47 (11.94)	0.53 (13.46)
	D	1.06 (26.92)	1.62 (41.15)	1.62 (41.15)	2.38 (60.45)
	D1	0.81 (20.57)	1.19 (30.23)	1.19 (30.23)	1.75 (44.45)
	E	1.69 (42.93)	2.62 (66.55)	2.62 (66.55)	3.62 (91.95)
	F	3.00 (76.20)	3.00 (76.20)	3.00 (76.20)	4.00 (101.60)
	G	0.62 (15.79)	0.75 (19.05)	0.75 (19.05)	1.00 (25.40)
	G1	0.17 (4.32)	0.22 (5.59)	0.22 (5.59)	0.34 (8.64)
	H*	4.06 (103.12)	5.18 (131.57)	5.13 (130.30)	6.70 (170.18)
	M	0.56 (14.22)	0.62 (15.75)	0.62 (15.75)	0.69 (17.53)
	N	0.31 (7.87)	0.38 (9.65)	0.38 (9.65)	0.50 (12.70)
Block Thickness		0.62 (15.75)	0.75 (19.05)	0.75 (19.05)	1.00 (25.40)

3 Way, 1 on Pressure

Stem Type	VEE REG	Catalog Number			
		10V2074 10V2084	SW4074 SW4084	SW6074 SW6084	SW8074 SW8084
Outside Diameter Tube		1/8 (3.18)	1/4 (6.35)	3/8 (6.35)	1/2 (12.70)
Orifice Diameter		0.094 (2.39)	0.187 (4.75)	0.250 (3.18)	0.375 (9.53)
Dimensions: inches (mm)	A	1.50 (38.10)	2.00 (50.80)	2.00 (50.80)	2.50 (63.50)
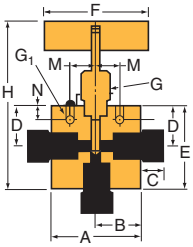	B	0.75 (19.05)	1.00 (25.40)	1.00 (25.40)	1.25 (31.75)
	C	0.31 (7.87)	0.38 (9.65)	0.47 (11.94)	0.53 (13.46)
	D	0.81 (20.57)	1.19 (30.23)	1.19 (30.23)	1.75 (44.45)
	D1	NA			
	E	1.55 (39.62)	2.43 (61.72)	2.43 (61.72)	3.38 (85.85)
	F	3.00 (76.20)	3.00 (76.20)	3.00 (76.20)	4.00 (101.60)
	G	0.62 (15.79)	0.75 (19.05)	0.75 (19.05)	1.00 (25.40)
	G1	0.17 (4.32)	0.22 (5.59)	0.22 (5.59)	0.34 (8.64)
	H*	3.94 (100.08)	5.00 (127.00)	5.00 (127.00)	6.45 (163.83)
	M	0.56 (14.22)	0.62 (15.75)	0.62 (15.75)	0.69 (17.53)
	N	0.31 (7.87)	0.38 (9.65)	0.38 (9.65)	0.50 (12.70)
Block Thickness		0.62 (15.75)	0.75 (19.05)	0.75 (19.05)	1.00 (25.40)

G - Packing Gland mounting hole drill size • G1 - Bracket mounting hole size • H* - Dimension is with stem in closed position
All dimensions for reference only and subject to change • For prompt service, Parker Autoclave stocks select products. Consult factory.

Tel: +45 63 12 83 00 | Email: ps@hymatik.com | www.hymatik.com | Hvidkaervej 27a, DK-5250 Odense SV, Denmark

10V2 and SW Series Dimensions:

2 Way Angle / Replacable Seat

		Catalog Number			
Stem Type	VEE REG	10V2872 10V2882	SW4872 SW4882	SW6872 SW6882	SW8872 SW8882
Outside Diameter Tube		1/8 (3.18)	1/4 (6.35)	3/8 (6.35)	1/2 (12.70)
Orifice Diameter		0.094 (2.39)	0.187 (4.75)	0.250 (3.18)	0.375 (9.53)
Dimensions: inches (mm)	A	1.50 (38.10)	2.00 (50.80)	2.00 (50.80)	2.50 (63.50)
	B	0.75 (19.05)	1.00 (25.40)	1.00 (25.40)	1.25 (31.75)
	C	0.31 (7.87)	0.38 (9.65)	0.47 (11.94)	0.53 (13.46)
	D	0.81 (20.57)	1.19 (31.32)	1.19 (31.32)	1.75 (44.45)
	D1	1.28 (32.51)	1.88 (47.75)	2.19 (55.62)	2.50 (63.50)
	E	1.56 (39.62)	2.25 (57.15)	2.25 (57.15)	3.25 (82.55)
	F	3.00 (76.20)	3.00 (76.20)	3.00 (76.20)	4.00 (101.60)
	G	0.62 (15.79)	0.75 (19.05)	0.75 (19.05)	1.00 (25.40)
	G1	0.17 (4.32)	0.22 (5.59)	0.22 (5.59)	0.34 (8.64)
	H*	4.50 (114.30)	5.75 (146.05)	5.75 (146.05)	7.51 (190.75)
	M	0.56 (14.22)	0.62 (15.75)	0.62 (15.75)	0.69 (17.53)
	N	0.31 (7.87)	0.38 (9.65)	0.38 (9.65)	0.50 (12.70)
Block Thickness		0.62 (15.75)	0.75 (19.05)	0.75 (19.05)	1.00 (25.40)

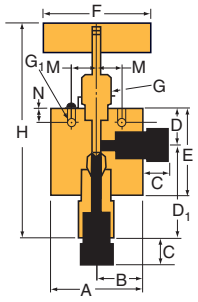

3 Way, 2 Stem Manifold

		Catalog Number			
Stem Type	VEE REG	10V2075 10V2085	SW4075 SW4085	SW6075 SW6085	SW8075 SW8085
Outside Diameter Tube		1/8 (3.18)	1/4 (6.35)	3/8 (6.35)	1/2 (12.70)
Orifice Diameter		0.094 (2.39)	0.187 (4.75)	0.250 (3.18)	0.375 (9.53)
Dimensions: inches (mm)	A	1.50 (38.10)	2.00 (50.80)	2.00 (50.80)	2.50 (63.50)
	B	0.75 (19.05)	1.00 (25.40)	1.00 (25.40)	1.25 (31.75)
	C	0.31 (7.87)	0.38 (9.65)	0.47 (11.94)	0.53 (13.46)
	D	1.12 (28.45)	1.68 (42.67)	1.68 (42.67)	2.56 (65.02)
	D1	0.81 (20.57)	1.19 (30.23)	1.19 (30.23)	1.75 (44.45)
	E	2.25 (57.15)	3.38 (85.85)	3.38 (85.85)	5.12 (130.05)
	F	3.00 (76.20)	3.00 (76.20)	3.00 (76.20)	4.00 (101.60)
	G	0.62 (15.79)	0.75 (19.05)	0.75 (19.05)	1.00 (25.40)
	G1	0.17 (4.32)	0.22 (5.59)	0.22 (5.59)	0.34 (8.64)
	H*	4.63 (117.60)	5.94 (150.88)	5.94 (150.88)	8.20 (208.28)
	M	0.56 (14.22)	0.62 (15.75)	0.62 (15.75)	0.69 (17.53)
	N	0.31 (7.87)	0.38 (9.65)	0.38 (9.65)	0.50 (12.70)
Block Thickness		0.62 (15.75)	0.75 (19.05)	0.75 (19.05)	1.00 (25.40)

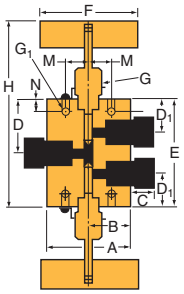

G - Packing Gland mounting hole drill size • G1 - Bracket mounting hole size • H* - Dimension is with stem in closed position
All dimensions for reference only and subject to change • For prompt service, Parker Autoclave stocks select products. Consult factory.

Material of Construction:

Item #	Description	Material
1	Hex Nut	300 Series SS
2	Thrust Washer	17-4 PH
3	Stem Sleeve	304 SS
4	Vee Stem (3/8" SW shown)	316 SS
5	Packing Gland	AMPCO 18
6	Thrust Washer	17-4 PH
7	Packing Washer	AMPCO 45
8	Bottom Washer	316 SS
9	Handle Assembly	316 SS
10	Fill HD Screw, #10-24	18-8 SS
11	Locking Device	302 SS
12	Packing	PTFE
13	Valve Body, (3/8" SW shown)	CW 316/316L SS
•	Replaceable Seat	17-4 PH

Typical spare parts found in Repair Kits (• indicates part not shown)

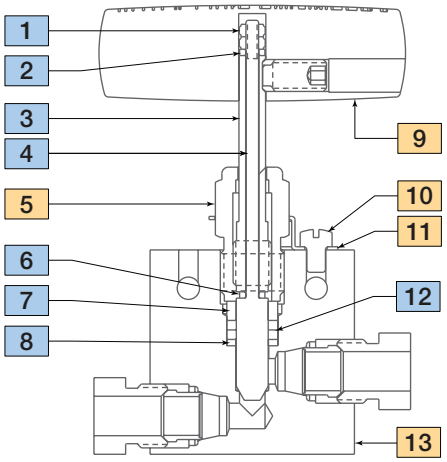

Panel Hole Sizes:

Valve Size	Inches			
	A	B	Screw Size	G
10V2	1.12	.22	#10-24	.62
4 and 6	1.25	.22	#10-24	.75
8	1.375	.22	#10-24	1.00
Use suffix -PM for extra mounting hardware				

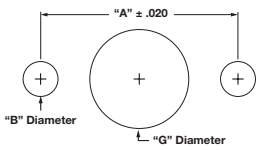

Needle Valve Panel Mount

Tel: +45 63 12 83 00 | Email: ps@hymatik.com | www.hymatik.com | Hvidkaervej 27a, DK-5250 Odense SV, Denmark

Valve Options: (For Actuator Options please reference specific Actuator brochure)



Pneumatic Valve Actuators:

The need to control process and vent valves from a remote location makes air operated valves a vital component to many processing operations. All Parker Autoclave Engineers' valves are available with piston type actuators. Five sizes of air actuators (light, mini-light, medium, heavy duty or extra heavy, single and double stage) are offered to meet the service requirements of Parker Autoclave Engineers' Low, Medium and High Pressure needle valves. Both air-to-open (normally closed) and air-to-close (normally open) designs are included in the product line. Optional air to open AND close actuators available upon request. Please see our Pneumatic Valve Actuator Brochure to help size the proper actuator for your application.



Electric Valve Actuators:

Remotely controlling process flow at high pressure enhances safety and lowers labor costs. Parker Autoclave Engineers developed a flow control valve available in several models including weatherproof and explosionproof options.

The Electrically Actuated Shut-off/Flow Regulating Actuator (FRC Series) is available for all sizes of 10V2 and SW Series "SpeedBite" valves up to full working pressure. Explosion proof version is rated for hydrogen service and can withstand wide process temperature ranges.

Stem Options:

Most Parker Autoclave Engineers' valves are available with either Vee (on-off) or Regulating (Flow Control) Stems in our standard valve body seat or with our optional replaceable seat as shown below:

VEE Stem

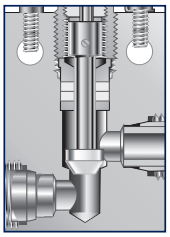

The Vee stem is used for direct on-off, metal-to-metal shut-off with quick-opening flow characteristics.

Regulating Stem

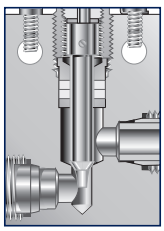

In some applications, more precise flow control is required than is possible with a Vee stem. For these cases, Autoclave offers a non-rotating, two-piece regulating stem which can be used for both control and shut-off. While it is not as precise as the control associated with the MicroMetering stem, especially with smaller flows, it does offer substantially better control than the Vee stem.

Replaceable Seat
(with Vee Stem)

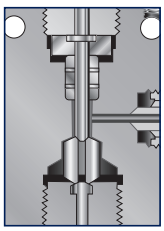

Replaceable seat option is only available with Right-Angle Style body. Replaceable seat is supplied as standard with an additional seat - rotate to use second side. Can be used with either stem type. Options include Stellite material or N-Dura coating to increase service life.

Tel: +45 63 12 83 00 | Email: ps@hymatik.com | www.hymatik.com | Hvidkaervej 27a, DK-5250 Odense SV, Denmark

Valve Options: (For Actuator Options please reference specific Actuator brochure)

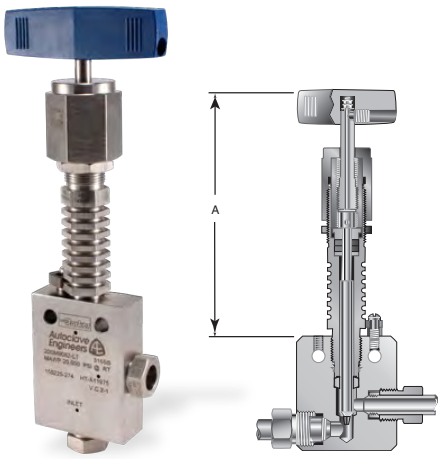

High/Low Temperature Extension:

Not typically needed for 10V2/SW Series valves as temperature range does not exceed the barriers below, but option is shown for consideration.

-HT High Temperature

-LT Low Temperature

Valve Series	Outside Diameter Tube Size (inches)	Dimensions "A" inches (mm)
10V2 & SW (this option not typically needed)	1/8"	5.38 (137)
	1/4"	5.50 (140)
	3/8"	5.50 (140)
	1/2"	6.31 (160)
HT option code includes Graphite (-GY) packing LT option code includes 316 SS Trim material and PTFE packing		

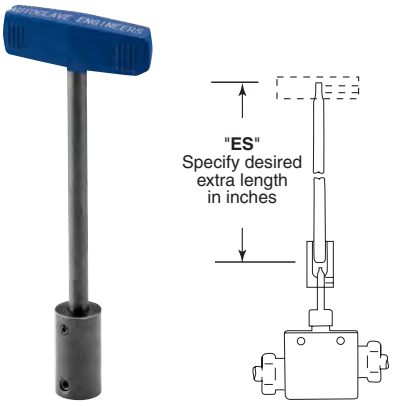

ES Stem Extender:

Stem extenders are offered for High and Low temperature operation or to extend through panel or barricade.

To order valve with Stem Extender, add "**ES-**" and length (6", 12", 18", 24") to beginning of valve part number e.g. ES12-SW6071. Other lengths to special order.

To order Stem Extender only, provide valve model prefix e.g. ES12-SW6. Handle not included – use same provided with original valve.



Needle Valve Clam Shell Handle Lockout:

(order separately using part numbers shown below, padlock not included)

Clam Shell Handle locks are provided to lockout valves in open or closed position preventing unauthorized personnel from actuating valve during shutdown or emergency situations. This clamshell design is available in four (4) sizes dependent on handle length:

P/N AE004855 – 1" to 2.5" handle length
P/N 90088 – 2.5" to 5.0" handle length
P/N 90194 – 6.5" to 10" handle length
P/N AE004350 – 8" to 13" handle length

Tel: +45 63 12 83 00 | Email: ps@hymatik.com | www.hymatik.com | Hvidkaervej 27a, DK-5250 Odense SV, Denmark

Needle Valve

Medium Pressure Cone & Thread 20,000 psi (1380 bar)

15SM and 20SM Series



Principle of Operation:

SM Series Valves are designed specifically for use with matching orifice Medium Pressure Cone & Thread Fittings and Tubing for the most efficient flow path possible using Cone & Thread style connections. Designed for a maximum of 20,000 psi MAWP using high tensile strength UNS S31600 cold worked 316 Stainless Steel material as standard, we include larger ID tubing rated to 15,000 psi (15SM valves) for even higher flow rate capability.

Medium Pressure Valve Features:

Temperature Rated -423° to 1200°F (-252° to 650°C) with associated packing/material options

- Designed for use with Medium Pressure cold worked 316/316L stainless steel tubing as standard
- 15SM Series Hi-Flow valves available in sizes from 9/16" to 1-1/2" (See matched-bore tubing)
- 20SM Series valves available in sizes from 1/4" to 1" (See matched-bore tubing)
- UNS S31600, CW 316 Stainless Steel body construction as standard. See Technical brochure for additional material options
- Non-rotating stem prevents stem/seat galling
- Metal-to-Metal seating achieves bubble-tight shut-off, longer stem/seat life, greater durability for repeated on/off cycles and excellent corrosion resistance. These valves can be used with liquid or gas.
- PTFE packing below stem threads provides dependable stem and body sealing. Optional packing materials available.
- Choice of Vee (shutoff) or Regulating (Flow Control) stem tips
- Replaceable Seat Option available with Right Angle 2-way body style
- Optional N-Dura Stem and Seat coating or Stellite material option for severe service available
- Pneumatic and Electric Actuator Options available - see page 8 for more details

Traceability is ensured by use of heat and purchase order codes etched on valve body that also includes model number, MAWP rating, and material type references. All valves include connection collar and gland nut unless requested otherwise. Parker Autoclave Engineers' valves are complemented by a complete line of Medium Pressure Cone & Thread fittings, tubing, check valves, relief valves, and line filters.

Note: SM Series fully replaces 20SC, 20SV, and 15SV Series. 15SM Series replaces 10SM Series. 20SM and 15SM repair kits are used to repair these valve types.

All Parker Autoclave Engineers products are designed in accordance with ASME B31.3 Chapter IX High Pressure Piping standards.

ENGINEERING YOUR SUCCESS.

SM Series Needle Valve: Pressures to 20,000 psi (1379 bar)



Tube Outside Diameter Size (inches)	Connection Type	Orifice Size Inches (mm)	Rated C_V*	Pressure Rating psi (bar) @Room Temperature**
1/4 (20SM4)	SF250CX20	0.125 (3.18)	0.31	20,000 (1379)
3/8 (20SM6)	SF375CX20	0.219 (5.56)	0.75	20,000 (1379)
9/16 (20SM9)	SF562CX20	0.312 (7.92)	1.30	20,000 (1379)
3/4 (20SM12)	SF750CX20	0.438 (11.13)	2.50	20,000 (1379)
1 (20SM16)	SF1000CX20	0.562 (14.27)	4.40	20,000 (1379)
9/16 (15SM9)	SF562CX10	0.359 (9.12)	1.75	15,000 (1034)
3/4 (15SM12)	SF750CX10	0.516 (13.10)	2.80	15,000 (1034)
1 (15SM16)	SF1000CX10	0.688 (17.48)	5.20	15,000 (1034)
1 1/2 (15SM24)	SF1500CX	0.937 (23.80)	14	15,000 (1034)

Notes

* C_V values shown are for 2-way straight valve pattern. For 2-way angle patterns, increase C_V value 50%. (Based on water). Formula for converting Cv to volumetric flow can be found in Technical Information section.

** Maximum Allowable Working Pressures decrease as temperatures increase - see pressure/temperature rating guide in Technical Information section.

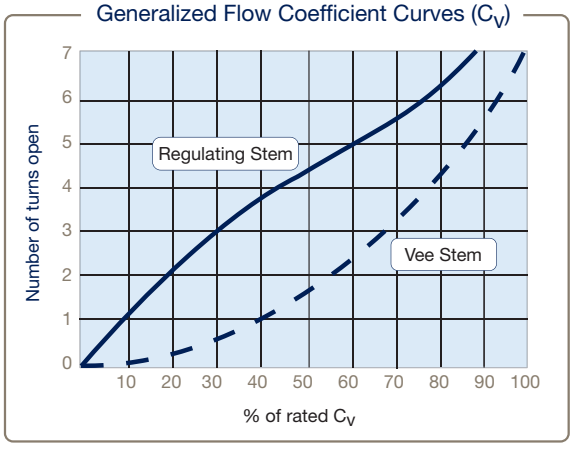

SM Series Flow Curve for Vee and Regulating Stem Valves

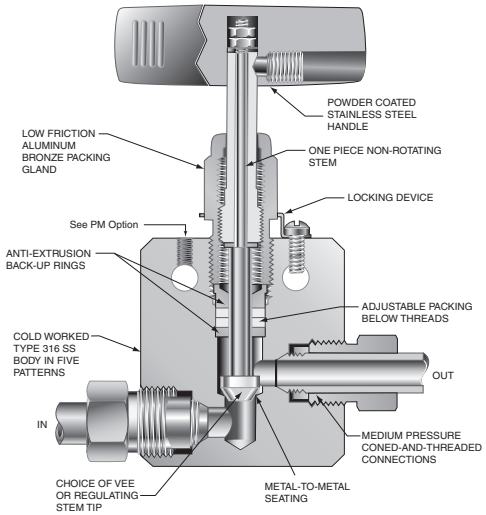

To ensure proper fit use Parker Autoclave tubing

Valve Packing Options:

Standard Parker Autoclave Engineers valves with PTFE packing may be operated from 0°F (-18°C) to 450°F (232°C). High and Cryogenic temperature packing and/or extended stuffing box are available for service from -423°F (-252°C) to 1200°F (650°C) by adding the following suffixes to catalog order number:

- **-B** Cryogenic trim materials and PTFE packing required when below 0°F (-18°C) to -100°F (-73°C)
- **-LT** Extended packing option with PTFE packing and Cryogenic trim materials to -423°F (-252°C)
- **-TG** Standard valve with PTFE-Glass packing -100°F (-73°C) to 600°F (316°C) (See also -B option above when below 0°F (-18°C)
- **-GY** Standard valve with Graphite Yarn packing 32°F (0°C) to 800°F (427°C). Used when selecting HT option. **(Note: 3/4" valve rated 8000 psi (552 bar) and 1" rated 6000 psi (412 bar) max with Graphite Yarn packing.)**
- **-HT** Extended stuffing box valve with Graphite Braided Yarn packing to 1200°F (650°C)

For the effect on max pressure due to High Temperatures, please see "Technical Brochure" in main catalog.

Note: Refer to Tools, Installation & Operation catalog for proper connection, packing, seating & running torques.

Tel: +45 63 12 83 00 | Email: ps@hymatik.com | www.hymatik.com | Hvidkaervej 27a, DK-5250 Odense SV, Denmark

Ordering Guide:

For complete information on available stem types, optional connections and additional valve options, see pages 8-9 or contact your Sales Representative. SM Series valves are furnished complete with connection components, unless otherwise specified.

Building a Part Number: *Example: 20SM4071*

Example Part Number:	20SM	4	07	1	XX
Ordering Parameters/Options:	Valve Series	Outside Diameter Tube Size	Stem/Seat Type	Body Pattern	Options
Table Reference: (see below)	A	B	C	D	E

A - Valve Series	
15SM	15,000 psi Medium Pressure Needle Valve (9/16" thru 1 1/2" sizes)
20SM	20,000 psi Medium Pressure Needle Valve (1/4 thru 1" sizes)

B - Outside Diameter Tube Size	
4	1/4" (20SM only)
6	3/8" (20SM only)
9	9/16"
12	3/4"
16	1"
24	1-1/2" (15SM only)

C - Stem/Seal Type (see page 8 for optional stem types)	
07	Non-Rotating Vee Stem (on-off service)
08	Non-Rotating Regulating Stem (tapered tip for regulating and shutoff)
87	Vee Stem with Replaceable Seat (angle valve only)
88	Regulating Stem with Replaceable Seat (angle valve only)

Notes:

Valve Manuals can be found on our website at **www.Autoclave.com**. Connection, Running and Seating Torques can be found in the product manual or in our Tools and Installation Catalog Section. Valves that have not been cycled for a substantial period of time may require higher initial actuation torque.

*Replaceable seat option is sold with two (2) seat surfaces 180° apart.

D - Body Pattern	
1	Two-Way Straight
2	Two-Way Angle
3	Three-Way, Two on Pressure
4	Three-Way, One on Pressure
5	Three-Way, Two Stem Manifold Valve

E - Options (choose as many as necessary)	
For additional valve options see pages 8 & 9 or contact factory.	
B	Low temperature service below 0°F (-18°C) (included in LT code)
LT	Low Temperature Extension (to -423°F) (includes PTFE packing)
TG	PTFE Glass (25%) Packing (to 600°F)
GY4	Graphite Yarn Packing (to 800°F)
HT4	High Temperature Extension (to 1200°F) (includes GY packing)
K	Antivibration Gland replaces standard gland
*SOG	NACE Material, Hardness Verification/Certificate
HYG	Hydrogen/Helium upgrade/Seat Testing
*** 2507	UNS 32750, 2507 Super Duplex Wetted Materials
*** IN625	UNS N06625 Inconel 625 Wetted Materials
*** HC	UNS N10276 Hastelloy C276 Wetted Materials
Pneumatic and Electric Actuator Options - see individual brochures for Suffix Codes Other materials available upon request. See Technical Brochure for list of common material options.	

Notes:

316 SS valve bodies are cold worked and not suitable for use in NACE (ISO 15156) applications. If required, contact factory for options.

* SOG suffix also changes CW 316 SS Body material to Annealed 316 SS suitable for NACE service, Pressure reduction of 60% possible

*** Special Materials often have reduced MAWP ratings, see Technical brochure for assistance and for additional material options.

4 - GY packing increases friction on stem which can limit max pressure in larger valves (3/4" is limited to 8,000 psi and 1" is limited to 6000 psi)

Note: use of optional material only changes "wetted parts" to selected material. Items like collars and glands remain CW 316/316L SS. Use **-SOG** (Includes hardness check for NACE) or **-AP** suffix

Panel Hole Size:

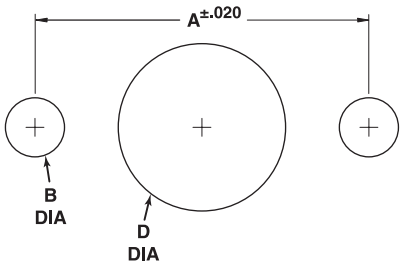

Needle Valve Panel Mount

	Inches			
Valve Size	A	B	Screw Size/Thread	D
4 & 6	1.25	.22	10 - 24	.75
9	1.375	.22	10 - 24	1.00
12	1.75	.22	10 - 24	1.12
16	2.50	.22	10 - 24	1.62
24	N/A	N/A	N/A	N/A
Panel Mount Screw Length -1/4" min. (2 each required) (**PM** option no longer available)				

Material of Construction:

Item #	Description	Material
1	Hex Nut	300 Series SS
2	Thrust Washer	17-4 PH
3	Stem Sleeve	316 SS
4	Packing Gland	AMPCO 45
5	Thrust Washer	17-4 PH
6	Stem Collar	316 SS
7	Packing Washer	AMPCO 45
8	Bottom Washer	316 SS
9	Vee Stem, 9/16" Shown	316 SS
10	Handle	316 SS
11	HD Screw #10-24	18-8 SS
12	Locking Device	302 SS
13	Packing	PTFE
14	Body, 20SM 9/16" Shown	316 SS
•	Seat Retainer	316 SS
•	Replaceable Seat	17-4 PH

Typical spare parts found in Repair Kits (• indicates not shown)

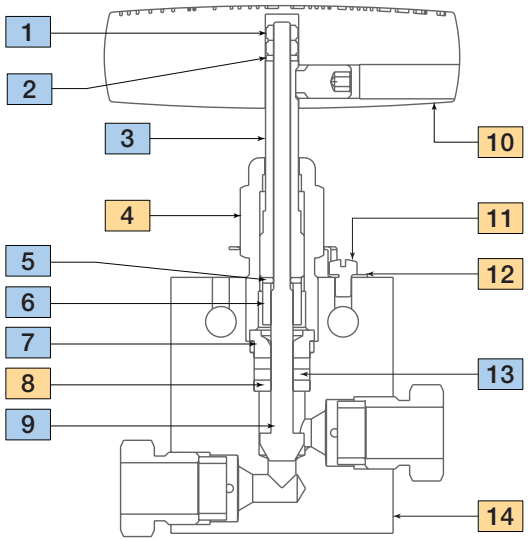

Basic Repair Kits for 316 SS Material:

Stem Type		Basic Repair Kit for 316 SS Material Outside Diameter Tube: 1/4"	3/8"	9/16"	3/4"	1"	1-1/2"
15SM/20SM Vee Stem (includes body option codes 1, 2, 3, & 4)	VEE	RSM407	RSM607	RSM907	RSM1207	RSM1607	R15SM2407
15SM Regulating Stem (includes body option codes 1, 2, 3, & 4)	REG	RSM408	RSM608	R15SM908	R15SM1208	R15SM1608	R15SM2408
20SM Regulating Stem (includes body option codes 1, 2, 3, & 4)	REG	RSM408	RSM608	R20SM908	R20SM1208	R20SM1608	-
15SM 2 Way, Replaceable Seat and Stem	VEE REG	RSM4872 RSM4882	RSM6872 RSM6882	R15SM9872 R15SM9882	R15SM12872 R15SM12882	R15SM16872 R15SM16882	R15SM24872 R15SM24882
20SM 2 Way, Replaceable Seat and Stem	VEE REG	RSM4872 RSM4882	RSM6872 RSM6882	R20SM9872 R20SM9882	R20SM12872 R20SM12882	R20SM16872 R20SM16882	- -
15SM 3 Way, 2 Stem Manifold	VEE REG	RSM4075 RSM4085	RSM6075 RSM6085	RSM9075 R15SM9085	RSM12075 R15SM12085	RSM16075 R15SM16085	RSM24075 R15SM24085
20SM 3 Way, 2 Stem Manifold	VEE REG	RSM4075 RSM4085	RSM6075 RSM6085	RSM9075 R20SM9085	RSM12075 R20SM12085	RSM16075 R20SM16085	- -

When ordering for valves bought with additional suffix options, please include those exact suffix codes when ordering repair kit. (Example: the stem for a manual valve is manufactured differently for a pneumatically actuated valve and the repair kit must include the exact actuator suffix codes)
Valve Manuals can be found on our website at **www.Autoclave.com**.
Connection, Running and Seating Torques can be found in the product manual or in our Tools and Installation Catalog Section

Tel: +45 63 12 83 00 | Email: ps@hymatik.com | www.hymatik.com | Hvidkaervej 27a, DK-5250 Odense SV, Denmark

SM Series Needle Valve Dimensions:

2 Way Straight - 15SM

Stem Type	VEE REG	Catalog Number			
		15SM9071 15SM9081	15SM12071 15SM12081	15SM16071 15SM16081	15SM24071 15SM24081
Outside Diameter Tube		**9/16 (14.29)**	**3/4 (19.05)**	**1 (25.40)**	**1.50 (38.10)**
Orifice Diameter		0.359 (9.12)	0.516 (13.11)	0.688 (17.48)	0.937 (23.80)
Dimensions: inches (mm)	A	2.50 (63.50)	3.00 (76.20)	4.12 (104.65)	5.75 (146.05)
	B	1.25 (31.75)	1.50 (38.10)	2.06 (53.32)	2.88 (73.03)
	C	0.53 (13.46)	0.62 (15.75)	0.63 (16.00)	1.00 (25.40)
	D	2.38 (60.45)	3.00 (76.20)	3.75 (95.25)	5.25 (133.35)
	D1	1.75 (44.45)	2.25 (57.15)	2.81 (71.37)	3.75 (95.25)
	E	2.88 (73.15)	3.75 (95.25)	4.63 (117.60)	6.44 (163.53)
	F	4.00 (101.60)	10.25 (260.35)	10.25 (260.35)	23.75 (603.25)
	G	1.00 (25.40)	1.12 (28.45)	1.62 (41.15)	N/A (N/A)
	G1	0.34 (8.64)	0.44 (11.18)	0.56 (14.22)	0.75 (19.05)
	H*	5.93 (150.86)	7.00 (177.80)	9.00 (228.84)	11.04 (280.42)
	M	0.69 (17.53)	0.88 (22.35)	1.25 (31.75)	1.88 (47.63)
	N	0.50 (12.70)	0.63 (16.00)	1.13 (28.70)	1.50 (38.10)
Block Thickness		1.00 (25.40)	1.38 (35.05)	1.75 (44.45)	2.25 (57.19)

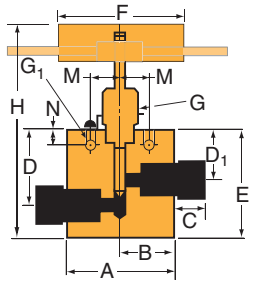

Bar handle replaces Blue "T" handle on sizes 3/4" and up

2 Way Straight - 20SM

Catalog Number					
20SM4071 20SM4081	20SM6071 20SM6081	20SM9071 20SM9081	20SM12071 20SM12081	20SM16071 20SM16081
1/4 (6.35)	**3/8 (9.53)**	**9/16 (14.29)**	**3/4 (19.05)**	**1 (25.40)**
0.125 (3.18)	0.219 (5.56)	0.312 (7.92)	0.438 (11.13)	0.562 (14.27)
2.00 (50.80)	2.00 (50.80)	2.50 (63.50)	3.00 (76.20)	4.12 (104.65)
1.00 (25.40)	1.00 (25.40)	1.25 (31.75)	1.50 (38.10)	2.06 (53.32)
0.38 (9.65)	0.47 (11.94)	0.53 (13.46)	0.62 (15.75)	0.63 (16.00)
1.62 (41.15)	1.62 (41.15)	2.38 (60.45)	3.00 (76.20)	3.75 (95.25)
1.19 (30.23)	1.19 (30.23)	1.75 (44.45)	2.25 (57.15)	2.81 (71.37)
2.00 (50.80)	2.00 (50.80)	2.88 (73.15)	3.75 (95.25)	4.63 (117.60)
3.00 (76.20)	3.00 (76.20)	4.00 (101.60)	10.25 (260.35)	10.25 (260.35)
0.75 (19.05)	0.75 (19.05)	1.00 (25.40)	1.12 (28.45)	1.62 (41.15)
0.22 (5.59)	0.22 (5.59)	0.34 (8.64)	0.44 (11.18)	0.56 (14.22)
4.69 (119.13)	4.63 (117.48)	5.93 (150.86)	7.00 (177.80)	9.00 (228.84)
0.62 (15.75)	0.62 (15.75)	0.69 (17.53)	0.88 (22.35)	1.25 (31.75)
0.38 (9.65)	0.38 (9.65)	0.50 (12.70)	0.63 (16.00)	1.13 (28.70)
0.75 (19.05)	0.75 (19.05)	1.00 (25.40)	1.38 (35.05)	1.75 (44.45)

2 Way Angle - 15SM

Stem Type	VEE REG	Catalog Number			
		15SM9072 15SM9082	15SM12072 15SM12082	15SM16072 15SM16082	15SM24072 15SM24082
Outside Diameter Tube		**9/16 (14.29)**	**3/4 (19.05)**	**1 (25.40)**	**1.50 (38.10)**
Orifice Diameter		0.359 (9.12)	0.516 (13.11)	0.688 (17.48)	0.937 (23.80)
Dimensions: inches (mm)	A	2.50 (63.50)	3.00 (76.20)	4.12 (104.65)	5.75 (146.05)
	B	1.25 (31.75)	1.50 (38.10)	2.06 (53.32)	2.88 (73.03)
	C	0.53 (13.46)	0.62 (15.75)	0.63 (16.00)	1.00 (25.40)
	D	1.75 (44.45)	2.25 (57.15)	2.81 (71.37)	3.75 (95.25)
	D1	-	-	-	-
	E	3.38 (85.85)	4.25 (107.95)	5.12 (130.05)	6.75 (171.45)
	F	4.00 (101.60)	10.25 (260.35)	10.25 (260.35)	23.75 (603.25)
	G	1.00 (25.40)	1.12 (28.45)	1.62 (41.15)	N/A (N/A)
	G1	0.34 (8.64)	0.44 (11.18)	0.56 (14.22)	0.75 (19.05)
	H*	6.43 (163.56)	7.50 (190.50)	9.00 (228.84)	11.35 (288.32)
	M	0.69 (17.53)	0.88 (22.35)	1.25 (31.75)	1.88 (47.63)
	N	0.50 (12.70)	0.63 (16.00)	1.13 (28.70)	1.50 (38.10)
Block Thickness		1.00 (25.40)	1.38 (35.05)	1.75 (44.45)	2.25 (57.19)

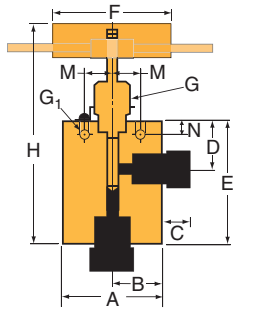

Bar handle replaces Blue "T" handle on sizes 3/4" and up

2 Way Angle - 20SM

Catalog Number					
20SM4072 20SM4082	20SM6072 20SM6082	20SM9072 20SM9082	20SM12072 20SM12082	20SM16072 20SM16082
1/4 (6.35)	**3/8 (9.53)**	**9/16 (14.29)**	**3/4 (19.05)**	**1 (25.40)**
0.125 (3.18)	0.219 (5.56)	0.312 (7.92)	0.438 (11.13)	0.562 (14.27)
2.00 (50.80)	2.00 (50.80)	2.50 (63.50)	3.00 (76.20)	4.12 (104.65)
1.00 (25.40)	1.00 (25.40)	1.25 (31.75)	1.50 (38.10)	2.06 (53.32)
0.38 (9.65)	0.47 (11.94)	0.53 (13.46)	0.62 (15.75)	0.63 (16.00)
1.19 (30.23)	1.19 (30.23)	1.75 (44.45)	2.25 (57.15)	2.81 (71.37)
-	-	-	-	-
2.44 (61.90)	2.44 (61.90)	3.38 (85.85)	4.25 (107.95)	5.12 (130.05)
3.00 (76.20)	3.00 (76.20)	4.00 (101.60)	10.25 (260.35)	10.25 (260.35)
0.75 (19.05)	0.75 (19.05)	1.00 (25.40)	1.12 (28.45)	1.62 (41.15)
0.22 (5.59)	0.22 (5.59)	0.34 (8.64)	0.44 (11.18)	0.56 (14.22)
4.81 (122.25)	4.81 (122.25)	6.43 (163.56)	7.50 (190.50)	9.00 (228.84)
0.62 (15.75)	0.62 (15.75)	0.69 (17.53)	0.88 (22.35)	1.25 (31.75)
0.38 (9.65)	0.38 (9.65)	0.50 (12.70)	0.63 (16.00)	1.13 (28.70)
0.75 (19.05)	0.75 (19.05)	1.00 (25.40)	1.38 (35.05)	1.75 (44.45)

H* - Dimension is with stem in closed position

All dimensions for reference only and subject to change • For prompt service, Parker Autoclave stocks select products. Consult factory.

SM Series Needle Valve Dimensions:

3 Way, 2 On Pressure - 15SM

		Catalog Number			
Stem Type	VEE REG	15SM9073 15SM9083	15SM12073 15SM12083	15SM16073 15SM16083	15SM24073 15SM24083
Outside Diameter Tube		**9/16 (14.29)**	**3/4 (19.05)**	**1 (25.40)**	**1.50 (38.10)**
Orifice Diameter		0.359 (9.12)	0.516 (13.11)	0.688 (17.48)	0.937 (23.80)
Dimensions: inches (mm)	A	2.50 (63.50)	3.00 (76.20)	4.12 (104.65)	5.75 (146.05)
	B	1.25 (31.75)	1.50 (38.10)	2.06 (53.32)	2.88 (73.03)
	C	0.53 (13.46)	0.62 (15.75)	0.63 (16.00)	1.00 (25.40)
	D	2.38 (60.45)	3.00 (76.20)	3.75 (95.25)	5.25 (133.35)
	D1	1.75 (44.45)	2.25 (57.15)	2.81 (71.37)	3.75 (95.25)
	E	3.63 (92.08)	4.63 (117.48)	5.88 (149.50)	8.13 (206.38)
	F	4.00 (101.60)	10.25 (260.35)	10.25 (260.35)	23.75 (603.25)
	G	1.00 (25.40)	1.12 (28.45)	1.62 (41.15)	N/A (N/A)
	G1	0.34 (8.64)	0.44 (11.18)	0.56 (14.22)	0.75 (19.05)
	H*	6.52 (165.59)	7.88 (200.03)	9.75 (247.89)	12.73 (323.22)
	M	0.69 (17.53)	0.88 (22.35)	1.25 (31.75)	1.88 (47.63)
	N	0.50 (12.70)	0.63 (16.00)	1.13 (28.70)	1.50 (38.10)
Block Thickness		1.00 (25.40)	1.38 (35.05)	1.75 (44.45)	2.25 (57.19)

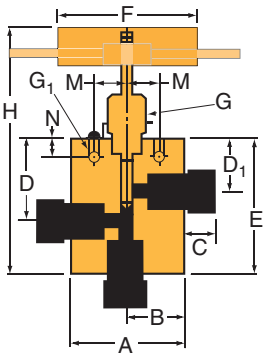

Bar handle replaces Blue "T" handle on sizes 3/4" and up

3 Way, 2 On Pressure - 20SM

	Catalog Number				
Stem Type	20SM4073 20SM4083	20SM6073 20SM6083	20SM9073 20SM9083	20SM12073 20SM12083	20SM16073 20SM16083
Outside Diameter Tube	**1/4 (6.35)**	**3/8 (9.53)**	**9/16 (14.29)**	**3/4 (19.05)**	**1 (25.40)**
Orifice Diameter	0.125 (3.18)	0.219 (5.56)	0.312 (7.92)	0.438 (11.13)	0.562 (14.27)
A	2.00 (50.80)	2.00 (50.80)	2.50 (63.50)	3.00 (76.20)	4.12 (104.65)
B	1.00 (25.40)	1.00 (25.40)	1.25 (31.75)	1.50 (38.10)	2.06 (53.32)
C	0.38 (9.65)	0.47 (11.94)	0.53 (13.46)	0.62 (15.75)	0.63 (16.00)
D	1.63 (41.28)	1.63 (41.28)	2.38 (60.45)	3.00 (76.20)	3.75 (95.25)
D1	1.19 (30.23)	1.19 (30.23)	1.75 (44.45)	2.25 (57.15)	2.81 (71.37)
E	2.63 (66.68)	2.63 (66.68)	3.63 (92.08)	4.63 (117.48)	5.88 (149.35)
F	3.00 (76.20)	3.00 (76.20)	4.00 (101.60)	10.25 (260.35)	10.25 (260.35)
G	0.75 (19.05)	0.75 (19.05)	1.00 (25.40)	1.12 (28.45)	1.62 (41.15)
G1	0.22 (5.59)	0.22 (5.59)	0.34 (8.64)	0.44 (11.18)	0.56 (14.22)
H*	5.00 (127.00)	5.00 (127.00)	6.51 (165.59)	7.88 (200.03)	9.75 (247.89)
M	0.62 (15.75)	0.62 (15.75)	0.69 (17.53)	0.88 (22.35)	1.25 (31.75)
N	0.38 (9.65)	0.38 (9.65)	0.50 (12.70)	0.63 (16.00)	1.13 (28.70)
Block Thickness	0.75 (19.05)	0.75 (19.05)	1.00 (25.40)	1.38 (35.05)	1.75 (44.45)

3 Way, 1 On Pressure - 15SM

		Catalog Number			
Stem Type	VEE REG	15SM9074 15SM9084	15SM12074 15SM12084	15SM16074 15SM16084	15SM24074 15SM24084
Outside Diameter Tube		**9/16 (14.29)**	**3/4 (19.05)**	**1 (25.40)**	**1.50 (38.10)**
Orifice Diameter		0.359 (9.12)	0.516 (13.11)	0.688 (17.48)	0.937 (23.80)
Dimensions: inches (mm)	A	2.50 (63.50)	3.00 (76.20)	4.12 (104.65)	5.75 (146.05)
	B	1.25 (31.75)	1.50 (38.10)	2.06 (53.32)	2.88 (73.03)
	C	0.53 (13.46)	0.62 (15.75)	0.63 (16.00)	1.00 (25.40)
	D	1.75 (44.45)	2.25 (57.15)	2.81 (71.37)	3.75 (95.25)
	D1	-	-	-	-
	E	3.38 (85.85)	4.25 (107.95)	5.12 (130.05)	6.63 (168.28)
	F	4.00 (101.60)	10.25 (260.35)	10.25 (260.35)	23.75 (603.25)
	G	1.00 (25.40)	1.12 (28.45)	1.62 (41.15)	N/A (N/A)
	G1	0.34 (8.64)	0.44 (11.18)	0.56 (14.22)	0.75 (19.05)
	H*	6.31 (160.56)	7.50 (190.50)	9.09 (231.13)	11.23 (285.06)
	M	0.69 (17.53)	0.88 (22.35)	1.25 (31.75)	1.88 (47.63)
	N	0.50 (12.70)	0.63 (16.00)	1.13 (28.70)	1.50 (38.10)
Block Thickness		1.00 (25.40)	1.38 (35.05)	1.75 (44.45)	2.25 (57.19)

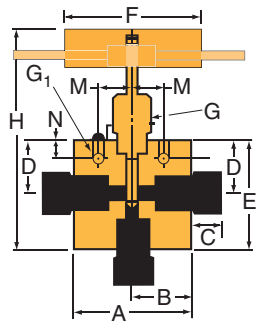

Bar handle replaces Blue "T" handle on sizes 3/4" and up

3 Way, 1 On Pressure - 20SM

	Catalog Number				
Stem Type	20SM4074 20SM4084	20SM6074 20SM6084	20SM9074 20SM9084	20SM12074 20SM12084	20SM16074 20SM16084
Outside Diameter Tube	**1/4 (6.35)**	**3/8 (9.53)**	**9/16 (14.29)**	**3/4 (19.05)**	**1 (25.40)**
Orifice Diameter	0.125 (3.18)	0.219 (5.56)	0.312 (7.92)	0.438 (11.13)	0.562 (14.27)
A	2.00 (50.80)	2.00 (50.80)	2.50 (63.50)	3.00 (76.20)	4.12 (104.65)
B	1.00 (25.40)	1.00 (25.40)	1.25 (31.75)	1.50 (38.10)	2.06 (53.32)
C	0.38 (9.65)	0.47 (11.94)	0.53 (13.46)	0.62 (15.75)	0.63 (16.00)
D	1.19 (30.23)	1.19 (30.23)	1.75 (44.45)	2.25 (57.15)	2.81 (71.37)
D1	-	-	-	-	-
E	2.44 (61.90)	2.44 (61.90)	3.38 (85.85)	4.25 (107.95)	5.12 (130.05)
F	3.00 (76.20)	3.00 (76.20)	4.00 (101.60)	10.25 (260.35)	10.25 (260.35)
G	0.75 (19.05)	0.75 (19.05)	1.00 (25.40)	1.12 (28.45)	1.62 (41.15)
G1	0.22 (5.59)	0.22 (5.59)	0.34 (8.64)	0.44 (11.18)	0.56 (14.22)
H*	4.81 (122.25)	4.81 (122.25)	6.31 (160.65)	7.50 (190.50)	9.00 (228.84)
M	0.62 (15.75)	0.62 (15.75)	0.69 (17.53)	0.88 (22.35)	1.25 (31.75)
N	0.38 (9.65)	0.38 (9.65)	0.50 (12.70)	0.63 (16.00)	1.13 (28.70)
Block Thickness	0.75 (19.05)	0.75 (19.05)	1.00 (25.40)	1.38 (35.05)	1.75 (44.45)

H* - Dimension is with stem in closed position

All dimensions for reference only and subject to change • For prompt service, Parker Autoclave stocks select products. Consult factory.

Tel: +45 63 12 83 00 | Email: ps@hymatik.com | www.hymatik.com | Hvidkaervej 27a, DK-5250 Odense SV, Denmark

SM Series Needle Valve Dimensions:

2 Way Angle Replaceable Seat - 15SM

		Catalog Number			
Stem Type	VEE REG	15SM9872 15SM9882	15SM12872 15SM12882	15SM16872 15SM16882	15SM24872 15SM24882
Outside Diameter Tube		**9/16 (14.29)**	**3/4 (19.05)**	**1 (25.40)**	**1.50 (38.10)**
Orifice Diameter		0.359 (9.12)	0.516 (13.11)	0.688 (17.48)	0.937 (23.80)
Dimensions: inches (mm)	A	2.50 (63.50)	3.00 (76.20)	4.12 (104.65)	5.75 (146.05)
	B	1.25 (31.75)	1.50 (38.10)	2.06 (53.32)	2.88 (73.03)
	C	0.53 (13.46)	0.62 (15.75)	0.63 (16.00)	1.00 (25.40)
	D	1.75 (44.45)	2.25 (57.15)	2.69 (68.33)	3.75 (95.25)
	D1	2.50 (63.50)	3.44 (87.38)	4.38 (111.13)	5.22 (132.59)
	E	3.38 (85.85)	4.25 (107.95)	5.25 (133.35)	6.75 (171.45)
	F	4.00 (101.60)	10.25 (260.35)	10.25 (260.35)	23.75 (603.25)
	G	1.00 (25.40)	1.12 (28.45)	1.62 (41.15)	N/A (N/A)
	G1	0.34 (8.64)	0.44 (11.18)	0.56 (14.22)	0.75 (19.05)
	H*	7.34 (186.68)	9.00 (228.60)	11.00 (279.64)	13.57 (344.68)
	M	0.69 (17.53)	0.88 (22.35)	1.25 (31.75)	1.88 (47.63)
	N	0.50 (12.70)	0.63 (16.00)	1.13 (28.70)	1.50 (38.10)
Block Thickness		1.00 (25.40)	1.38 (35.05)	1.75 (44.45)	2.25 (57.19)

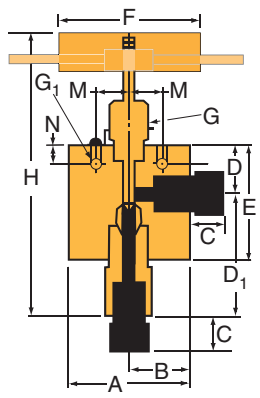

Bar handle replaces Blue "T" handle on sizes 3/4" and up

2 Way Angle Replaceable Seat - 20SM

	Catalog Number				
Stem Type	20SM4872 20SM4882	20SM6872 20SM6882	20SM9872 20SM9882	20SM12872 20SM12882	20SM16872 20SM16882
Outside Diameter Tube	**1/4 (6.35)**	**3/8 (9.53)**	**9/16 (14.29)**	**3/4 (19.05)**	**1 (25.40)**
Orifice Diameter	0.125 (3.18)	0.219 (5.56)	0.312 (7.92)	0.438 (11.13)	0.562 (14.27)
A	2.00 (50.80)	2.00 (50.80)	2.50 (63.50)	3.00 (76.20)	4.12 (104.65)
B	1.00 (25.40)	1.00 (25.40)	1.25 (31.75)	1.50 (38.10)	2.06 (53.32)
C	0.38 (9.65)	0.47 (11.94)	0.53 (13.46)	0.62 (15.75)	0.63 (16.00)
D	1.19 (30.23)	1.19 (30.23)	1.75 (44.45)	2.25 (57.15)	2.69 (68.33)
D1	2.13 (53.98)	2.13 (53.98)	2.50 (63.50)	3.44 (87.38)	4.38 (111.13)
E	2.25 (57.15)	2.25 (57.15)	3.13 (79.38)	4.25 (107.95)	5.25 (133.35)
F	3.00 (76.20)	3.00 (76.20)	4.00 (101.60)	10.25 (260.35)	10.25 (260.35)
G	0.75 (19.05)	0.75 (19.05)	1.00 (25.40)	1.12 (28.45)	1.62 (41.15)
G1	0.22 (5.59)	0.22 (5.59)	0.34 (8.64)	0.44 (11.18)	0.56 (14.22)
H*	5.75 (146.05)	5.75 (146.05)	7.34 (186.68)	9.00 (228.60)	11.00 (279.64)
M	0.62 (15.75)	0.62 (15.75)	0.69 (17.53)	0.88 (22.35)	1.25 (31.75)
N	0.38 (9.65)	0.38 (9.65)	0.50 (12.70)	0.63 (16.00)	1.13 (28.70)
Block Thickness	0.75 (19.05)	0.75 (19.05)	1.00 (25.40)	1.38 (35.05)	1.75 (44.45)

3 Way, 2 On Pressure - 15SM

		Catalog Number			
Stem Type	VEE REG	15SM9075 15SM9085	15SM12075 15SM12085	15SM16075 15SM16085	15SM24075 15SM24085
Outside Diameter Tube		**9/16 (14.29)**	**3/4 (19.05)**	**1 (25.40)**	**1.50 (38.10)**
Orifice Diameter		0.359 (9.12)	0.516 (13.11)	0.688 (17.48)	0.937 (23.80)
Dimensions: inches (mm)	A	2.50 (63.50)	3.00 (76.20)	4.12 (104.65)	5.75 (146.05)
	B	1.25 (31.75)	1.50 (38.10)	2.06 (53.32)	2.88 (73.03)
	C	0.53 (13.46)	0.62 (15.75)	0.63 (16.00)	1.00 (25.40)
	D	2.56 (65.07)	3.25 (85.55)	3.75 (95.25)	5.25 (133.35)
	D1	1.75 (44.45)	2.25 (57.15)	2.81 (71.37)	3.75 (95.25)
	E	5.13 (130.18)	6.50 (165.10)	7.50 (190.50)	10.50 (266.70)
	F	4.00 (101.60)	10.25 (260.35)	10.25 (260.35)	23.75 (603.25)
	G	1.00 (25.40)	1.12 (28.45)	1.62 (41.15)	N/A (N/A)
	G1	0.34 (8.64)	0.44 (11.18)	0.56 (14.22)	0.75 (19.05)
	H*	8.13 (206.50)	9.75 (247.65)	12.18 (309.40)	15.10 (383.54)
	M	0.69 (17.53)	0.88 (22.35)	1.25 (31.75)	1.88 (47.63)
	N	0.50 (12.70)	0.63 (16.00)	1.13 (28.70)	1.50 (38.10)
Block Thickness		1.00 (25.40)	1.38 (35.05)	1.75 (44.45)	2.25 (57.19)

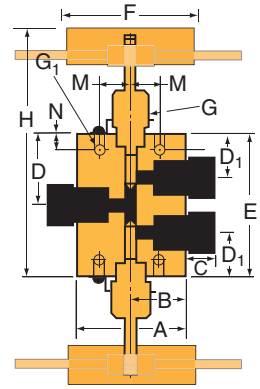

Bar handle replaces Blue "T" handle on sizes 3/4" and up

3 Way, 2 On Pressure - 20SM

	Catalog Number				
Stem Type	20SM4075 20SM4085	20SM6075 20SM6085	20SM9075 20SM9085	20SM12075 20SM12085	20SM16075 20SM16085
Outside Diameter Tube	**1/4 (6.35)**	**3/8 (9.53)**	**9/16 (14.29)**	**3/4 (19.05)**	**1 (25.40)**
Orifice Diameter	0.125 (3.18)	0.219 (5.56)	0.312 (7.92)	0.438 (11.13)	0.562 (14.27)
A	2.00 (50.80)	2.00 (50.80)	2.50 (63.50)	3.00 (76.20)	4.12 (104.65)
B	1.00 (25.40)	1.00 (25.40)	1.25 (31.75)	1.50 (38.10)	2.06 (53.32)
C	0.38 (9.65)	0.47 (11.94)	0.53 (13.46)	0.62 (15.75)	0.63 (16.00)
D	1.69 (42.85)	1.69 (42.85)	2.56 (65.07)	3.25 (82.55)	3.75 (95.25)
D1	1.19 (30.15)	1.19 (30.15	1.75 (44.45)	2.25 (57.15)	2.81 (71.37)
E	3.38 (85.73)	3.38 (85.73)	5.13 (130.18)	6.50 (165.10)	7.50 (190.50)
F	3.00 (76.20)	3.00 (76.20)	4.00 (101.60)	10.25 (260.35)	10.25 (260.35)
G	0.75 (19.05)	0.75 (19.05)	1.00 (25.40)	1.12 (28.45)	1.62 (41.15)
G1	0.22 (5.59)	0.22 (5.59)	0.34 (8.64)	0.44 (11.18)	0.56 (14.22)
H*	5.69 (144.50)	5.69 (144.50)	8.13 (206.50)	9.75 (247.65)	12.18 (309.40)
M	0.62 (15.75)	0.62 (15.75)	0.69 (17.53)	0.88 (22.35)	1.25 (31.75)
N	0.38 (9.65)	0.38 (9.65)	0.50 (12.70)	0.63 (16.00)	1.13 (28.70)
Block Thickness	0.75 (19.05)	0.75 (19.05)	1.00 (25.40)	1.38 (35.05)	1.75 (44.45)

H* - Dimension is with stem in closed position

All dimensions for reference only and subject to change • For prompt service, Parker Autoclave stocks select products. Consult factory.

Valve Options:



Pneumatic Valve Actuators:

The need to control process and vent valves from a remote location makes air operated valves a vital component to many processing operations. All Parker Autoclave Engineers' valves are available with piston type actuators. Five sizes of air actuators (light, mini-light, medium, heavy duty or extra heavy, single and double stage) are offered to meet the service requirements of Parker Autoclave Engineers' Low, Medium and High Pressure needle valves. Both air-to-open (normally closed) and air-to-close (normally open) designs are included in the product line. Optional air to open AND close actuators available upon request. Please see our Pneumatic Valve Actuator Brochure to help size the proper actuator for your application.



Electric Valve Actuators:

Remotely controlling process flow at high pressure enhances safety and lowers labor costs. Parker Autoclave Engineers developed a flow control valve available in several models including weatherproof and explosionproof options.

The Electrically Actuated Shut-off/Flow Regulating Actuator (FRC Series) is available for most of our SM Series Valves through 9/16" tubing size and full working pressure. Explosion proof version is rated for hydrogen service and can withstand wide process temperature ranges.

Stem Options:

Most Parker Autoclave Engineers' valves are available with either Vee (on-off) or Regulating (Flow Control) Stems in our standard valve body seat or with our optional replaceable seat as shown below. For severe service stem (and replaceable seat if ordered) can be offered with N-Dura Diamond-Like coating (**-CS** suffix or **-CSS** (coated stem & seat)) or made from Stellite (**-SS** or **-SSRS** (Stellite stem, replaceable seat)).:

VEE Stem

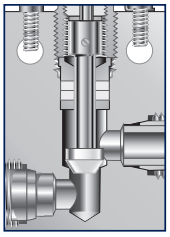

The Vee stem is used for direct on-off, metal-to-metal shut-off with quick-opening flow characteristics.

Regulating Stem

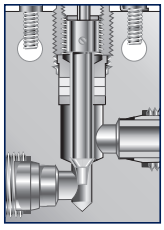

In some applications, more precise flow control is required than is possible with a Vee stem. For these cases, Autoclave offers a non-rotating, two-piece regulating stem which can be used for both control and shut-off. While it is not as precise as the control associated with the MicroMetering stem, especially with smaller flows, it does offer substantially better control than the Vee stem.

Replaceable Seat
(with Vee Stem)

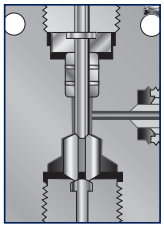

Replaceable seat option is only available with Right-Angle Style body. Replaceable seat is supplied as standard with an additional seat - rotate to use second side. Can be used with either stem type.
Options include Stellite material or N-Dura coating to increase service life.

Tel: +45 63 12 83 00 | Email: ps@hymatik.com | www.hymatik.com | Hvidkaervej 27a, DK-5250 Odense SV, Denmark

Valve Options:

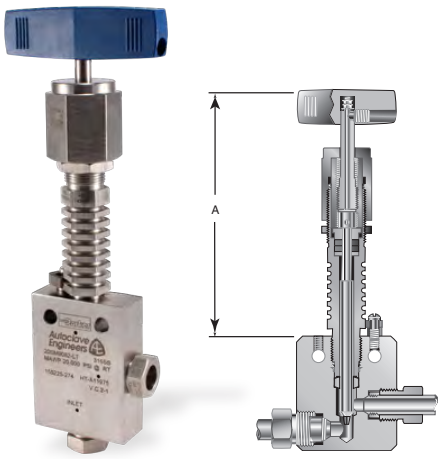

High/Low Temperature Extension:

Used in extreme temperature applications to move packing from flow stream with heatsink to moderate temperature.

-HT High Temperature (over 800°F (427°C))

-LT Low Temperature (under -100°F (-73°C))

Valve Series	Outside Diameter Tube Size (inches)	Dimensions "A" inches (mm)
15SM and 20SM	1/4"	5.50 (140)
	3/8"	5.50 (140)
	9/16"	6.31 (160)
	3/4"	6.31 (160)
	1"	6.31 (160)
	1-1/2"	13.1 (333)
HT option code includes Graphite (-GY) packing LT option code includes 316 SS Trim material and PTFE packing		

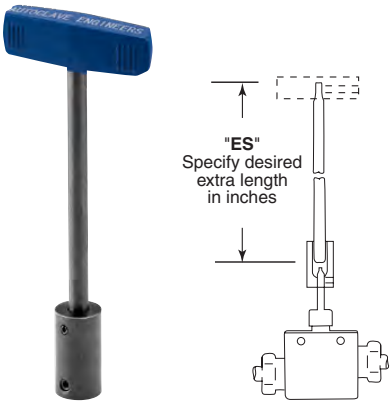

ES Stem Extender:

Stem extenders are offered for High and Low temperature operation or to extend through panel or barricade.

To order valve with Stem Extender, add "**ES-**" and length (6", 12", 18", 24") to beginning of valve part number e.g. ES12-20SM6071. Other lengths to special order.

To order Stem Extender only, provide valve model prefix e.g. ES12-20SM6. Handle not included – use same provided with original valve.



Needle Valve Clam Shell Handle Lockout:

(order separately using part numbers shown below, padlock not included)

Clam Shell Handle locks are provided to lockout valves in open or closed position preventing unauthorized personnel from actuating valve during shutdown or emergency situations. This clamshell design is available in four (4) sizes dependent on handle length:

P/N AE004855 – 1" to 2.5" handle length
P/N 90088 – 2.5" to 5.0" handle length
P/N 90194 – 6.5" to 10" handle length
P/N AE004350 – 8" to 13" handle length

Tel: +45 63 12 83 00 | Email: ps@hymatik.com | www.hymatik.com | Hvidkaervej 27a, DK-5250 Odense SV, Denmark

Assembly Instructions

SM Series Medium Pressure Needle Valve - Pressures to 20,000 psi (1379 bar)

SM Medium Pressure Connection: Step by Step Assembly Instructions

Step 1	Step 2	Step 3
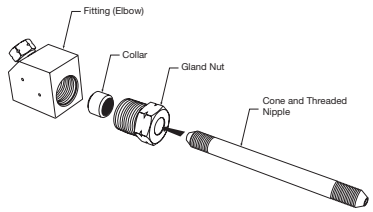	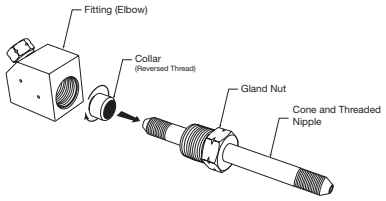	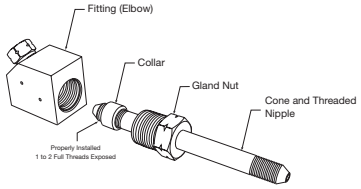
Insert Coned and Threaded Nipple through Gland (Typical Tee Fitting Assembly consisting of Fitting Body, Collar, Gland, and Coned and Threaded Nipple or Tube End.)	Thread Collar turning (Reverse Threaded to prevent rotation during torque process) onto Coned and Threaded Nipple end.	For proper Collar placement, thread Collar onto Nipple leaving 1 to 2 full threads exposed on Fitting side of Collar. Lubricate Gland Threads with anti-seize compound and tube tip with process compatible lubricant (do not use metal-flake type)

Step 4	Step 5	SM Medium Pressure Gland Torque
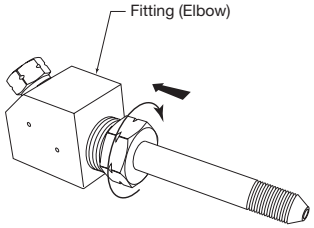	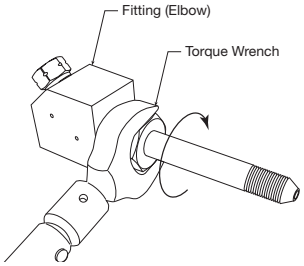	For 316/316L SS, 2507 Super Duplex Tubing & Adapters
Insert Tube/Gland assembly into Fitting body, turning clockwise approximately 4-5 threads (if unable to turn full distance by hand, look for misalignment issues with tubing and correct for proper seal).	Use Torque Wrench to properly set (see chart in next frame) Cone & Thread Connections. (Available with wrench adapters in Tools and Installation brochure)	

Fitting Size	Required Torque ft-lb (N.m)
1/4" MP-20Ksi	20 (27)
3/8" MP-20Ksi	30 (75)
9/16" MP-15Ksi	55 (75)
9/16" MP-20Ksi	55 (75)
3/4" MP-15Ksi	75 (102)
3/4" MP-20Ksi	90 (122)
1" MP-15Ksi	135 (187)
1" MP-20Ksi	135 (187)
1-1/2" MP-15Ksi	200 (272)

For torques and optional materials (lower pressures), see Tools and Installation Catalog 02-0149SE

Tel: +45 63 12 83 00 | Email: ps@hymatik.com | www.hymatik.com | Hvidkaervej 27a, DK-5250 Odense SV, Denmark

Needle Valve

High Pressure Cone & Thread
60,000 psi, 100,000 psi, 150,000 psi

30SC, 43SC, 30VM, 40VM, 60VM, 100VM,
and 150V Series



Principle of Operation:

Since 1945, Parker Autoclave Engineers (PAE) has designed and built premium quality valves, fittings and tubing. Our valves are designed specifically for use with High or Ultra High Pressure Fittings and Tubing for the most efficient flow path possible using Cone & Thread style connections. Designed in accordance with ASME 31.3 Chapter IX High Pressure Piping standards.

High Pressure Valve (to 60,000 psi) Features:

- Cryogenic or High Temperature Rated -423° to 1200°F (-252° to 650°C) with options
- Manufactured with UNS S31600 cold worked 316 stainless steel made to PAE proprietary standard
- Various designs cover valve sizes 1/4" to 1" that use the "F" Series Connections (see Tools & Installation)
- Non-Rotating stem prevents stem/seat galling
- Metal-to-metal seating achieves bubble-tight shut-off, longer stem/seat life in abrasive flow, greater durability for repeated on/off cycles and excellent corrosion resistance
- For dependable stem and body sealing 30SC, 43SC, and 30VM valves are furnished with PTFE or PTFE glass packing; the 40VM and 60VM valves feature nylon/leather/nylon packing below threads and all can be used on liquids and gases
- Choice of Vee (Shutoff) or Regulating (Flow Control) stem tips available with optional N-Dura or Stellite material options for severe service

Series 100VM: Pressures to 100,000 psi (6900 bar) features:

- Cold-worked type 316 or 15-5PH stainless steel body with aluminum bronze packing gland and on-rotating stem
- Nylon/leather/nylon packing below stem threads
- Sizes from 1/4" to 9/16" that use the "F***C100" Series Connections (see Tools & Installation)

Series 150V: Pressures to 150,000 psi (10340 bar) features:

- Cylindrical body of high strength 15-5PH stainless steel with aluminum bronze packing gland. Tool steel non-rotating stem with replaceable seat of nickel maraging steel. Stem must be actuated with torque wrench see page 22 for torque values
- Wedge-type PTFE and leather packing below stem threads with beryllium-copper Parker Autoclave Anti-Extrusion Back up Rings
- Designed for use with 5/16" 150 Ksi tubing only, Vee stem tip (Shutoff) only

Parker Autoclave Engineers valves are complemented by a complete line of high pressure fittings and tubing. Traceability is ensured by use of heat and purchase order codes etched on valve body that also include model number, MAWP rating, and material type references. All valves include connection collar and gland nut unless requested otherwise.

Parker Autoclave Engineers

ENGINEERING YOUR SUCCESS.

30SC/43SC Series: Pressures to 43,000 psi (2965 bar)

For use with 1" High Pressure Tubing w/.438" ID

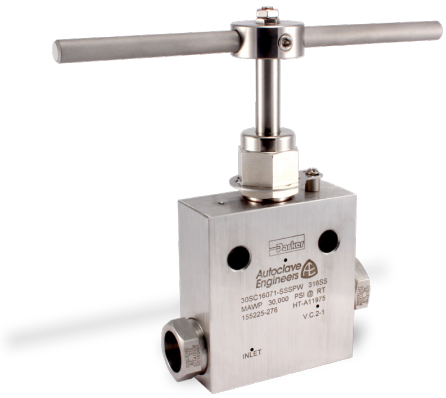

Tube Outside Diameter Size (inches)	Connection Type	Orifice Size Inches (mm)	Rated C_V*	Pressure Rating psi (bar) @Room Temperature**
1 (30SC Series)	F1000C43	0.438 (11.12)	2.6	30,000 (2068)
1 (43SC Series)	F1000C43	0.438 (11.12)	2.6	43,000 (2965)

Notes

* Cv values shown are for 2-way straight valve pattern. For 2-way angle patterns, increase CV value 50%. (Based on water). Formula for converting Cv to volumetric flow can be found in Technical Information section.

** Maximum Allowable Working Pressures decrease as temperatures increase - see pressure/temperature rating guide in Technical Information section.

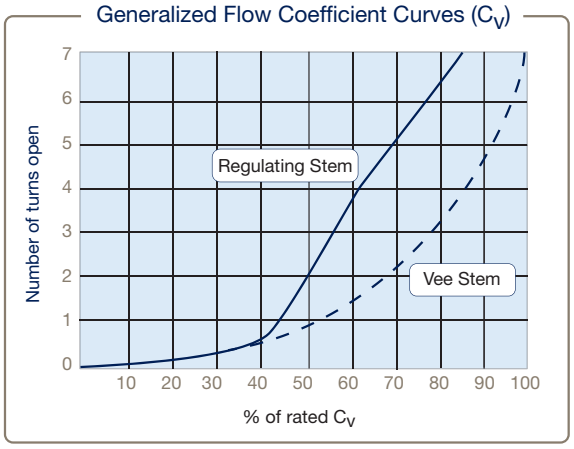

30SC and 43SC Series Flow Curve for Vee and Regulating Stem Valves

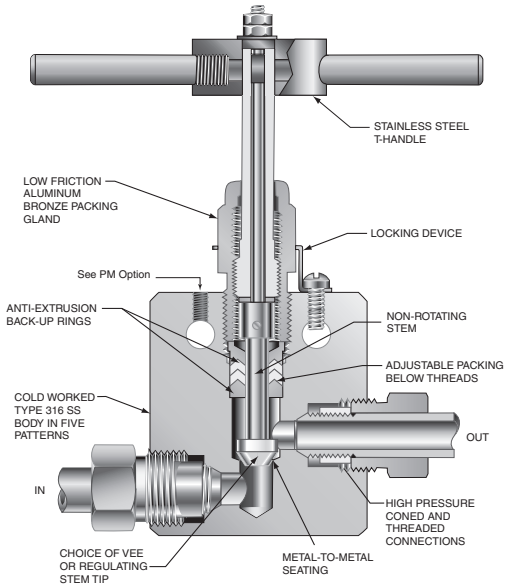

To ensure proper fit use Parker Autoclave tubing

Valve Packing Options:

Standard Parker Autoclave Engineers valves with PTFE packing may be operated from 0°F (-17.8°C) to 450°F (232°C). High and Cryogenic temperature packing and/or extended stuffing box are available for service from -423°F (-252°C) to 1200°F (650°C) by adding the following suffixes to catalog order number:

B Cryogenic trim materials and PTFE packing required when below 0°F (-18°C) to -100°F (-73°C)

LT Extended stuffing box valve with PTFE packing and Cryogenic trim materials to -423°F (-252°C)

TG Standard valve with PTFE-Glass packing -100°F (-73°C) to 600°F (316°C) (See also -B option above when below 0°F (-18°C)

GY Standard valve with Graphite Yarn packing 32°F (0°C) to 800°F (427°C). Used when selecting HT option. (Note: 1" valve using graphite yarn packing has significant increase in torque needed to actuate valve at pressure. Contact factory with application detail for assistance.)

HT Extended stuffing box valve with Graphite Yarn packing to 1200°F (650°C)

(See "Technical Brochure" for Pressure/Temperature effect on temperatures above ambient.)

Tel: +45 63 12 83 00 | Email: ps@hymatik.com | www.hymatik.com | Hvidkaervej 27a, DK-5250 Odense SV, Denmark

Ordering Guide:

For complete information on available stem types, optional connections and additional valve options, see pages 26-27 or contact your Sales Representative. 30SC & 43SC Series valves are furnished complete with connection components, unless otherwise specified. See High Pressure Fittings and Tubing brochure for compatible products.

Building a Part Number: ***Example: 30SC16071***

Example Part Number:	30SC	16	07	1	XX
Ordering Parameters/Options:	Valve Series	Outside Diameter Tube Size	Stem/Seat Type	Body Pattern	Options
Table Reference: (see below)	A	B	C	D	E

A - Valve Series	
30SC	High Pressure Needle Valve
43SC	High Pressure Needle Valve

B - Outside Diameter Tube Size	
16	1"

C - Stem/Seat Type	
07	Non-Rotating Vee Stem (on-off service)
08	Non-Rotating Regulating Stem (tapered tip for regulating and shutoff)
87	Vee Stem with Replaceable Seat (angle valve only)
88	Regulating Stem with Replaceable Seat (angle valve only)

Notes: Valves that have not been cycled for a substantial period of time may require higher initial actuation torque.

Valve Manuals can be found on our website at **www.Autoclave.com**, Connection, Running and Seating Torques can be found in the product manual or in our Tools and Installation Catalog Section.

D - Body Pattern	
1	Two-Way Straight
2	Two-Way Angle
3	Three-Way, Two on Pressure
4	Three-Way, One on Pressure
5	Three-Way, Two Stem Manifold Valve

E - Options	
K	Antivibration Gland (replaces standard gland)
B	All 316 SS Materials required when below 0°F (-18°C) (included in LT)
LT	Low Temperature Extension (to -423°F) (includes PTFE packing)
TG	PTFE Glass (25%) Packing (to 600°F)
GY	Graphite Yarn Packing (to 800°F) [GY Packing increases Handle Torque, contact factory]
HT	High Temperature Extension (to 1200°F) (includes GY packing)

Pneumatic Actuator Options - see Actuator brochure for Suffix Codes
Other materials available upon request. See Technical Brochure for list of common options.
See "Technical Brochure" for Pressure/Temperature effect on temperatures above ambient.

Material of Construction:

Item #	Description	Material
1	Lock Nut	316 SS
2	Hex Socket Set Screw	300 Series SS
3	Locking Device	302 SS
4	Round Screw, #10-24	300 Series SS
5	Packing Washer	AMPCO 45
6	Packing	Teflon
7	Bottom Washer	316 SS
8	One Piece Stem	316 SS
9	Thrust Washer	17-4 PH
10	Handle	304 SS
11	Hub	316 SS
12	Sleeve	316 SS
13	Packing Gland	AMPCO 45
14	Thrust Washer	17-4 PH
15	Valve Body	316 SS
	Typical spare parts found in Repair Kits	

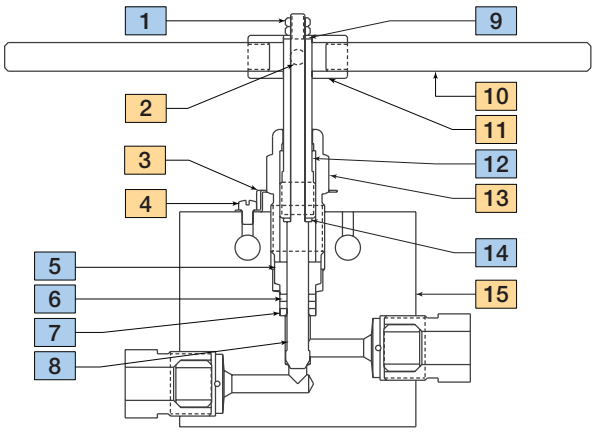

Panel Hole Sizes:

Valve Size	Inches			
	A	B	Screw Size	G
16	2.50	.22	#10-24	1.62

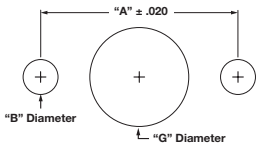

Needle Valve Panel Mount

Tel: +45 63 12 83 00 | Email: ps@hymatik.com | www.hymatik.com | Hvidkaervej 27a, DK-5250 Odense SV, Denmark

Basic Repair Kits for 316 SS Material:

Stem Type		Basic Repair Kit for 316 SS Material	
		Outside Diameter Tube:	
		30SC 1"	43SC 1"
2 Way Straight, 2 Way Angle 3 Way 2 On-Pressure, 3 Way 1 On-Pressure	VEE REG	R30SC1607 R30SC1608	R43SC1607 R43SC1608
2 Way, Replaceable Seat and Stem	VEE REG	R30SC16872 R30SC16882	R43SC16872 R43SC16882
3 Way, 2 Stem Manifold	VEE REG	R30SC16075 R30SC16085	R43SC16075 R43SC16085

When ordering for valves bought with additional suffix options, please include those exact suffix codes when ordering repair kit. (Example: the stem for a manual valve is manufactured differently for a pneumatically actuated valve and the repair kit must include the exact actuator suffix codes).
Valve Manuals can be found on our website at **www.Autoclave.com**,
Connection, Running and Seating Torques can be found in the product manual or in our Tools and Installation Catalog Section.

30SC and 43SC Series Dimensions:

2 Way Straight

		Catalog Number	
Stem Type	VEE REG	30SC16071 30SC16081	43SC16071 43SC16081
Outside Diameter Tube		1 (25.40)	1 (25.40)
Orifice Diameter		0.438 (11.12)	0.438 (11.12)
Dimensions: inches (mm)	A	4.12 (104.65)	4.88 (123.96)
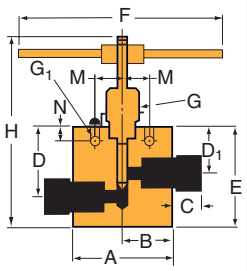	B	2.06 (52.32)	2.44 (61.96)
	C	0.72 (18.28)	0.72 (18.28)
	D	3.50 (88.90)	3.50 (88.90)
	D1	2.75 (69.85)	2.75 (69.85)
	E	4.44 (112.77)	4.44 (112.77)
	F	10.24 (260.10)	10.23 (259.84)
	G	1.62 (41.15)	1.62 (41.15)
	G1	0.56 (14.22)	0.56 (14.22)
	H*	8.61 (218.69)	8.61 (218.69)
	M	1.25 (31.75)	1.25 (31.75)
	N	1.12 (28.44)	1.12 (28.44)
Block Thickness		1.75 (44.45)	2.25 (57.15)

2 Way Angle

		Catalog Number	
Stem Type	VEE REG	30SC16072 30SC16082	43SC16072 43SC16082
Outside Diameter Tube		1 (25.40)	1 (25.40)
Orifice Diameter		0.438 (11.12)	0.438 (11.12)
Dimensions: inches (mm)	A	4.12 (104.65)	4.88 (123.96)
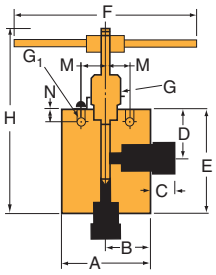	B	2.06 (52.32)	2.44 (61.96)
	C	0.72 (18.28)	0.72 (18.28)
	D	2.75 (69.85)	2.75 (69.85)
	D1	-	-
	E	5.12 (130.04)	5.12 (130.04)
	F	10.24 (260.10)	10.23 (259.84)
	G	1.62 (41.15)	1.62 (41.15)
	G1	0.56 (14.22)	0.56 (14.22)
	H*	9.29 (235.97)	9.29 (235.97)
	M	1.25 (31.75)	1.25 (31.75)
	N	1.12 (28.44)	1.12 (28.44)
Block Thickness		1.75 (44.45)	2.25 (57.15)

G - Packing Gland mounting hole drill size • G1 - Bracket mounting hole size • H* - Dimension is with stem in closed position
All dimensions for reference only and subject to change • For prompt service, Parker Autoclave stocks select products. Consult factory.

Tel: +45 63 12 83 00 | Email: ps@hymatik.com | www.hymatik.com | Hvidkaervej 27a, DK-5250 Odense SV, Denmark

30SC and 43SC Series Dimensions:

3 Way, 2 On Pressure

Stem Type	VEE REG	Catalog Number 30SC16073 30SC16083	Catalog Number 43SC16073 43SC16083
Outside Diameter Tube		1 (25.40)	1 (25.40)
Orifice Diameter		0.438 (11.12)	0.438 (11.12)
Dimensions: inches (mm)	A	4.12 (104.65)	4.88 (123.96)
	B	2.06 (52.32)	2.44 (61.96)
	C	0.72 (18.28)	0.72 (18.28)
	D	2.75 (69.85)	2.75 (69.85)
	D1	-	-
	E	5.12 (130.04)	5.12 (130.04)
	F	10.24 (260.10)	10.23 (259.84)
	G	1.62 (41.15)	1.62 (41.15)
	G1	0.56 (14.22)	0.56 (14.22)
	H*	9.29 (235.97)	9.29 (235.97)
	M	1.25 (31.75)	1.25 (31.75)
	N	1.12 (28.44)	1.12 (28.44)
Block Thickness		1.75 (44.45)	2.25 (57.15)

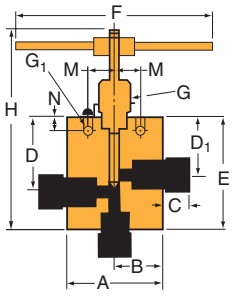

3 Way, 1 On Pressure

Stem Type	VEE REG	Catalog Number 30SC16074 30SC16084	Catalog Number 43SC16074 43SC16084
Outside Diameter Tube		1 (25.40)	1 (25.40)
Orifice Diameter		0.438 (11.12)	0.438 (11.12)
Dimensions: inches (mm)	A	4.12 (104.65)	4.88 (123.96)
	B	2.06 (52.32)	2.44 (61.96)
	C	0.72 (18.28)	0.72 (18.28)
	D	2.75 (69.85)	2.75 (69.85)
	D1	-	-
	E	5.12 (130.04)	5.12 (130.04)
	F	10.24 (260.10)	10.23 (259.84)
	G	1.62 (41.15)	1.62 (41.15)
	G1	0.56 (14.22)	0.56 (14.22)
	H*	9.29 (235.97)	9.29 (235.97)
	M	1.25 (31.75)	1.25 (31.75)
	N	1.12 (28.44)	1.12 (28.44)
Block Thickness		1.75 (44.45)	2.25 (57.15)

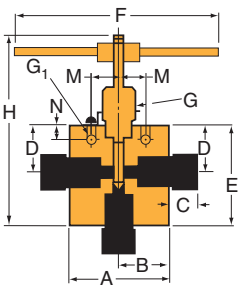

2 Way Angle Replaceable Seat

Stem Type	VEE REG	Catalog Number 30SC16872 30SC16882	Catalog Number 43SC16872 43SC16882
Outside Diameter Tube		1 (25.40)	1 (25.40)
Orifice Diameter		0.438 (11.12)	0.438 (11.12)
Dimensions: inches (mm)	A	4.12 (104.65)	4.88 (123.96)
	B	2.06 (52.32)	2.44 (61.96)
	C	0.72 (18.28)	0.72 (18.28)
	D	2.75 (69.85)	2.75 (69.85)
	D1	4.41 (112.05)	4.39 (111.51)
	E	5.25 (133.35)	5.25 (133.35)
	F	10.24 (260.10)	10.23 (259.84)
	G	1.62 (41.15)	1.62 (41.15)
	G1	0.56 (14.22)	0.56 (14.22)
	H*	11.33 (287.78)	11.31 (287.27)
	M	1.25 (31.75)	1.25 (31.75)
	N	1.12 (28.44)	1.12 (28.44)
Block Thickness		1.75 (44.45)	2.25 (57.15)

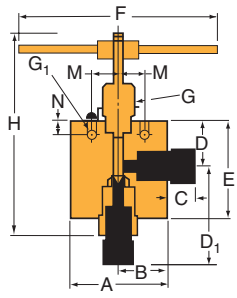

3 Way, 2 Stem Manifold

Stem Type	VEE REG	Catalog Number 30SC16075 30SC16085	Catalog Number 43SC16075 43SC16085
Outside Diameter Tube		1 (25.40)	1 (25.40)
Orifice Diameter		0.438 (11.12)	0.438 (11.12)
Dimensions: inches (mm)	A	4.12 (104.65)	4.88 (123.96)
	B	2.06 (52.32)	2.44 (61.96)
	C	0.72 (18.28)	0.72 (18.28)
	D	2.75 (69.85)	2.75 (69.85)
	D1	-	-
	E	5.12 (130.04)	5.12 (130.04)
	F	10.24 (260.10)	10.23 (259.84)
	G	1.62 (41.15)	1.62 (41.15)
	G1	0.56 (14.22)	0.56 (14.22)
	H*	9.29 (235.97)	9.29 (235.97)
	M	1.25 (31.75)	1.25 (31.75)
	N	1.12 (28.44)	1.12 (28.44)
Block Thickness		1.75 (44.45)	2.25 (57.15)

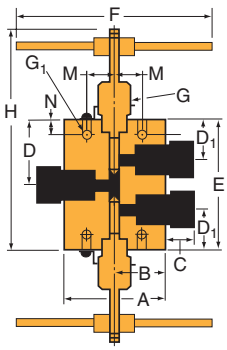

G - Packing Gland mounting hole drill size • G1 - Bracket mounting hole size • H* - Dimension is with stem in closed position
All dimensions for reference only and subject to change • For prompt service, Parker Autoclave stocks select products. Consult factory.

30VM Series: Pressures to 30,000 psi (2068 bar)

Larger Orifice and Higher Cv than 60VM valves



Tube Outside Diameter Size (inches)	Connection Type	Orifice Size Inches (mm)	Rated C_V*	Pressure Rating psi (bar) @Room Temperature**
1/4	F250C	0.094 (2.39)	0.12	30,000 (2068)
3/8	F375C	0.125 (3.18)	0.23	30,000 (2068)
9/16	F562C	0.125 (3.18)	0.33	30,000 (2068)

Notes

* Cv values shown are for 2-way straight valve pattern. For 2-way angle patterns, increase CV value 50%. (Based on water). Formula for converting Cv to volumetric flow can be found in Technical Information section.

** Maximum Allowable Working Pressures decrease as temperatures increase - see pressure/temperature rating guide in Technical Information section.

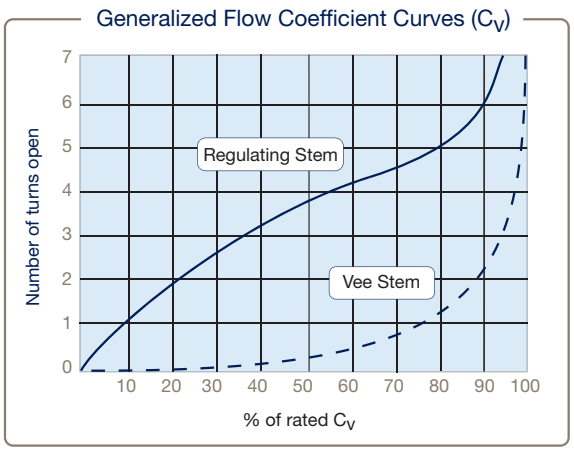

30VM Series Flow Curve for Vee and Regulating Stem Valves

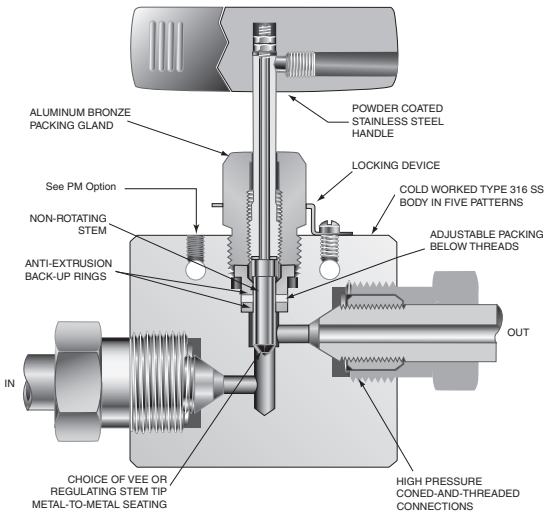

To ensure proper fit use Parker Autoclave tubing

Valve Packing Options:

Standard Parker Autoclave Engineers valves with PTFE glass packing may be operated from 0°F (-17.8°C) to 600°F (316°C). High and Cryogenic temperature packing and/or extended stuffing box are available for service from -423°F (-252°C) to 1200°F (650°C) by adding the following suffixes to catalog order number:

- **B** Cryogenic trim materials and PTFE glass packing required when below 0°F (-18°C) to -100°F (-73°C)
- **LT** Extended stuffing box valve with PTFE glass packing and Cryogenic trim materials to -423°F (-252°C)
- **GY** Standard valve with Graphite Yarn packing 32°F (0°C) to 800°F (427°C). Used when selecting HT option.
- **HT** Extended stuffing box valve with Graphite Yarn packing to 1200°F (650°C)

(See “Technical Brochure” for Pressure/Temperature effect on temperatures above ambient.)

Tel: +45 63 12 83 00 | Email: ps@hymatik.com | www.hymatik.com | Hvidkaervej 27a, DK-5250 Odense SV, Denmark

Ordering Guide:

For complete information on available stem types, optional connections and additional valve options, see pages 26-27 or contact your Sales Representative. 30VM Series valves are furnished complete with connection components, unless otherwise specified. See High Pressure Fittings and Tubing brochure for compatible products.

Building a Part Number: ***Example: 30VM4071***

Example Part Number:	30VM	4	07	1	XX
Ordering Parameters/Options:	Valve Series	Outside Diameter Tube Size	Stem/Seat Type	Body Pattern	Options
Table Reference: (see below)	A	B	C	D	E

A - Valve Series	
30VM	High Pressure Needle Valve

B - Outside Diameter Tube Size	
4	1/4"
6	3/8"
9	9/16"

C - Stem/Seal Type	
07	Non-Rotating Vee Stem (on-off service)
08	Non-Rotating Regulating Stem (tapered tip for regulating and shutoff)
87	Vee Stem with Replaceable Seat (angle valve only)
88	Regulating Stem with Replaceable Seat (angle valve only)

Notes: Valve Manuals can be found on our website at **www.Autoclave.com**. Connection, Running and Seating Torques can be found in the product manual or in our Tools and Installation Catalog Section. Valves that have not been cycled for a substantial period of time may require higher initial actuation torque.

*Replaceable seat option is sold with two (2) seat surfaces 180° apart.

D - Body Pattern	
1	Two-Way Straight
2	Two-Way Angle
3	Three-Way, Two on Pressure
4	Three-Way, One on Pressure
5	Three-Way, Two Stem Manifold Valve

E - Options	
K	Antivibration Gland (replaces standard gland)
B	All 316 SS Materials required when below 0°F (-18°C) (included in LT)
LT	Low Temperature Extension (to -423°F) (includes PTFE Glass packing)
GY	Graphite Yarn Packing (to 800°F)
HT	High Temperature Extension (to 1200°F) (includes GY packing)
SOG	NACE MR0175 Material, Hardness Verification/Certificate
HYG	Hydrogen/Helium Cycle Life Upgrade/Seat Testing

Pneumatic Actuator Options - see Actuator brochure for Suffix Codes
Other materials available upon request. See Technical Brochure for list of common options.
See "Technical Brochure" for Pressure/Temperature effect on temperatures above ambient.

Material of Construction:

Item #	Description	Material
1	Hex Nut	300 Series SS
2	Thrust Washer	17-4 PH
3	Stem Sleeve	316 SS
4	Vee Stem, (3/8" 30VM shown)	316 SS
5	Packing Washer	AMPCO 45
6	Packing	PTFE Glass
7	Bottom Washer	316 SS
8	Handle	316 SS
9	Packing Gland	AMPCO 45
10	Locking Device	302SS
11	Screw #10	18-8 SS
12	Valve Body	316 SS
13	Replaceable Seat	17-4PH
14	Seat Retainer	316 SS
	Typical spare parts found in Repair Kits	

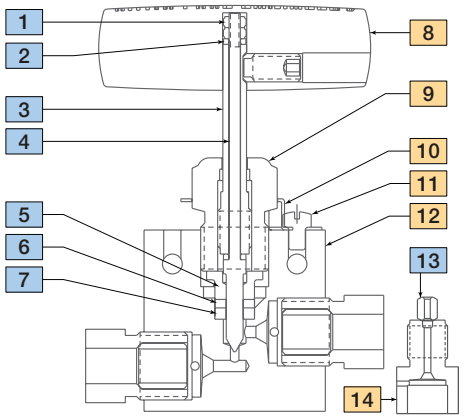

Panel Hole Sizes:

Valve Size	Inches			
	A	B	Screw Size	G
4 and 6	1.38	.22	#10-24	1.00
9	1.38	.22	#10-24	1.00

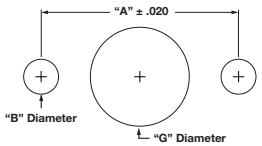

Needle Valve Panel Mount

Basic Repair Kits for 316 SS Material:

Stem Type		Basic Repair Kit for 316 SS Material Outside Diameter Tube: 1/4", 3/8", 9/16"
2 Way Straight, 2 Way Angle 3 Way 2 On-Pressure, 3 Way 1 On-Pressure	VEE REG	R30VM7 R30VM8
2 Way, Replaceable Seat and Stem	VEE REG	R30VM872 R30VM882
3 Way, 2 Stem Manifold	VEE REG	R30VM075 R30VM085

When ordering for valves bought with additional suffix options, please include those exact suffix codes when ordering repair kit. (Example: the stem for a manual valve is manufactured differently for a pneumatically actuated valve and the repair kit must include the exact actuator suffix codes).
Valve Manuals can be found on our website at **www.Autoclave.com**,
Connection, Running and Seating Torques can be found in the product manual or in our Tools and Installation Catalog Section.

30VM Series Dimensions:

2 Way Straight

		Catalog Number		
Stem Type	VEE REG	30VM4071 30VM4081	30VM6071 30VM6081	30VM9071 30VM9081
Outside Diameter Tube		1/4 (6.35)	3/8 (9.53)	9/16 (14.29)
Orifice Diameter		0.94 (2.39)	0.125 (3.18)	0.125 (3.18)
Dimensions: inches (mm)	A	2.00 (50.80)	2.00 (50.80)	2.62 (66.55)
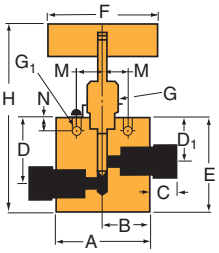	B	1.00 (25.40)	1.00 (25.40)	1.31 (33.27)
	C	0.50 (12.70)	0.53 (13.46)	0.81 (20.57)
	D	1.50 (38.10)	1.50 (38.10)	1.56 (39.62)
	D1	1.12 (28.45)	1.12 (28.45)	1.12 (28.45)
	E	2.00 (50.80)	2.00 (50.80)	2.44 (61.98)
	F	3.00 (76.20)	3.00 (76.20)	3.00 (76.20)
	G	1.00 (25.40)	1.00 (25.40)	1.00 (25.40)
	G1	0.22 (5.59)	0.22 (5.59)	0.28 (7.11)
	H*	4.62 (117.35)	4.68 (118.87)	5.06 (128.52)
	M	0.69 (17.53)	0.69 (17.53)	0.69 (17.53)
	N	0.38 (9.65)	0.38 (9.65)	0.38 (9.65)
Block Thickness		1.00 (25.40)	1.00 (25.40)	1.50 (38.10)

2 Way Angle

		Catalog Number		
Stem Type	VEE REG	30VM4072 30VM4082	30VM6072 30VM6082	30VM9072 30VM9082
Outside Diameter Tube		1/4 (6.35)	3/8 (9.53)	9/16 (14.29)
Orifice Diameter		0.94 (2.39)	0.125 (3.18)	0.125 (3.18)
Dimensions: inches (mm)	A	2.00 (50.80)	2.00 (50.80)	2.62 (66.55)
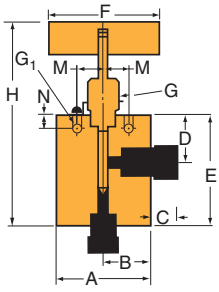	B	1.00 (25.40)	1.00 (25.40)	1.31 (33.27)
	C	0.50 (12.70)	0.53 (13.46)	0.81 (20.57)
	D	1.12 (28.45)	1.12 (28.45)	1.12 (28.45)
	D1	-	-	-
	E	2.00 (50.80)	2.12 (53.85)	2.44 (61.98)
	F	3.00 (76.20)	3.00 (76.20)	3.00 (76.20)
	G	1.00 (25.40)	1.00 (25.40)	1.00 (25.40)
	G1	0.22 (5.59)	0.22 (5.59)	0.28 (7.11)
	H*	4.62 (117.35)	4.74 (120.40)	5.06 (128.52)
	M	0.69 (17.53)	0.69 (17.53)	0.69 (17.53)
	N	0.38 (9.65)	0.38 (9.65)	0.38 (9.65)
Block Thickness		1.00 (25.40)	1.00 (25.40)	1.50 (38.10)

G - Packing Gland mounting hole drill size • G1 - Bracket mounting hole size • H* - Dimension is with stem in closed position
All dimensions for reference only and subject to change • For prompt service, Parker Autoclave stocks select products. Consult factory.

Tel: +45 63 12 83 00 | Email: ps@hymatik.com | www.hymatik.com | Hvidkaervej 27a, DK-5250 Odense SV, Denmark

30VM Series Dimensions:

3 Way, 2 On Pressure

Stem Type	VEE REG	Catalog Number		
		30VM4073 30VM4083	30VM6073 30VM6083	30VM9073 30VM9083
Outside Diameter Tube		1/4 (6.35)	3/8 (9.53)	9/16 (14.29)
Orifice Diameter		0.94 (2.39)	0.125 (3.18)	0.125 (3.18)
Dimensions: inches (mm)	A	2.00 (50.80)	2.00 (50.80)	2.62 (66.55)
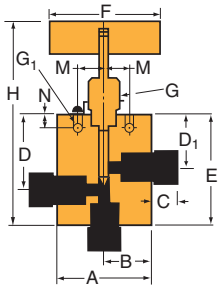	B	1.00 (25.40)	1.00 (25.40)	1.31 (33.27)
	C	0.50 (12.70)	0.53 (13.46)	0.81 (20.57)
	D	1.50 (38.10)	1.50 (38.10)	1.56 (39.62)
	D1	1.12 (28.45)	1.12 (28.45)	1.12 (28.45)
	E	2.12 (53.85)	2.50 (63.50)	2.88 (73.15)
	F	3.00 (76.20)	3.00 (76.20)	3.00 (76.20)
	G	1.00 (25.40)	1.00 (25.40)	1.00 (25.40)
	G1	0.22 (5.59)	0.22 (5.59)	0.28 (7.11)
	H*	4.74 (120.40)	5.12 (130.05)	5.49 (139.45)
	M	0.69 (17.53)	0.69 (17.53)	0.69 (17.53)
	N	0.38 (9.65)	0.38 (9.65)	0.38 (9.65)
Block Thickness		1.00 (25.40)	1.00 (25.40)	1.50 (38.10)

3 Way, 1 On Pressure

Stem Type	VEE REG	Catalog Number		
		30VM4074 30VM4084	30VM6074 30VM6084	30VM9074 30VM9084
Outside Diameter Tube		1/4 (6.35)	3/8 (9.53)	9/16 (14.29)
Orifice Diameter		0.94 (2.39)	0.125 (3.18)	0.125 (3.18)
Dimensions: inches (mm)	A	2.00 (50.80)	2.00 (50.80)	2.62 (66.55)
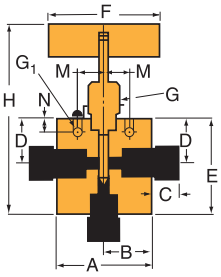	B	1.00 (25.40)	1.00 (25.40)	1.31 (33.27)
	C	0.50 (12.70)	0.53 (13.46)	0.81 (20.57)
	D	1.12 (28.45)	1.12 (28.45)	1.12 (28.45)
	D1	-	-	-
	E	2.00 (50.80)	2.12 (53.85)	2.44 (61.98)
	F	3.00 (76.20)	3.00 (76.20)	3.00 (76.20)
	G	1.00 (25.40)	1.00 (25.40)	1.00 (25.40)
	G1	0.22 (5.59)	0.22 (5.59)	0.28 (7.11)
	H*	4.62 (117.35)	4.74 (120.40)	5.12 (130.05)
	M	0.69 (17.53)	0.69 (17.53)	0.69 (17.53)
	N	0.38 (9.65)	0.38 (9.65)	0.38 (9.65)
Block Thickness		1.00 (25.40)	1.00 (25.40)	1.50 (38.10)

2 Way Angle Replaceable Seat

Stem Type	VEE REG	Catalog Number		
		30VM4872 30VM4882	30VM6872 30VM6882	30VM9872 30VM9882
Outside Diameter Tube		1/4 (6.35)	3/8 (9.53)	9/16 (14.29)
Orifice Diameter		0.94 (2.39)	0.125 (3.18)	0.125 (3.18)
Dimensions: inches (mm)	A	2.00 (50.80)	2.00 (50.80)	2.62 (66.55)
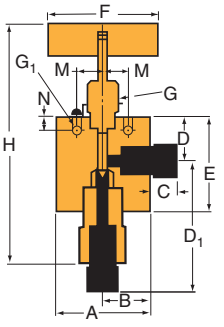	B	1.00 (25.40)	1.00 (25.40)	1.31 (33.27)
	C	0.50 (12.70)	0.53 (13.46)	0.81 (20.57)
	D	1.12 (28.45)	1.12 (28.45)	1.12 (28.45)
	D1	2.06 (52.32)	2.31 (58.67)	2.62 (66.55)
	E	2.38 (60.45)	2.38 (60.45)	2.44 (61.98)
	F	3.00 (76.20)	3.00 (76.20)	3.00 (76.20)
	G	1.00 (25.40)	1.00 (25.40)	1.00 (25.40)
	G1	0.22 (5.59)	0.22 (5.59)	0.28 (7.11)
	H*	5.80 (147.32)	6.05 (153.67)	6.45 (163.83)
	M	0.69 (17.53)	0.69 (17.53)	0.69 (17.53)
	N	0.38 (9.65)	0.38 (9.65)	0.38 (9.65)
Block Thickness		1.00 (25.40)	1.00 (25.40)	1.50 (38.10)

3 Way, 2 Stem Manifold

Stem Type	VEE REG	Catalog Number		
		30VM4075 30VM4085	30VM6075 30VM6085	30VM9075 30VM9085
Outside Diameter Tube		1/4 (6.35)	3/8 (9.53)	9/16 (14.29)
Orifice Diameter		0.94 (2.39)	0.125 (3.18)	0.125 (3.18)
Dimensions: inches (mm)	A	2.00 (50.80)	2.00 (50.80)	2.62 (66.55)
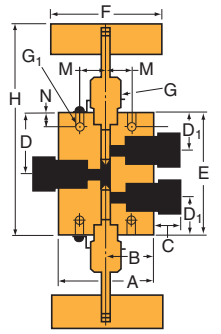	B	1.00 (25.40)	1.00 (25.40)	1.31 (33.27)
	C	0.50 (12.70)	0.53 (13.46)	0.81 (20.57)
	D	1.53 (38.86)	1.62 (41.15)	1.88 (47.75)
	D1	1.12 (28.45)	1.12 (28.45)	1.12 (28.45)
	E	3.06 (77.72)	3.25 (82.55)	3.75 (95.25)
	F	3.00 (76.20)	3.00 (76.20)	3.00 (76.20)
	G	1.00 (25.40)	1.00 (25.40)	1.00 (25.40)
	G1	0.22 (5.59)	0.22 (5.59)	0.28 (7.11)
	H*	5.68 (144.27)	5.87 (149.10)	6.37 (161.80)
	M	0.69 (17.53)	0.69 (17.53)	0.69 (17.53)
	N	0.38 (9.65)	0.38 (9.65)	0.38 (9.65)
Block Thickness		1.00 (25.40)	1.00 (25.40)	1.50 (38.10)

G - Packing Gland mounting hole drill size • G1 - Bracket mounting hole size • H* - Dimension is with stem in closed position
All dimensions for reference only and subject to change • For prompt service, Parker Autoclave stocks select products. Consult factory.

40VM Series: Pressures to 40,000 psi (2760 bar)

For use with 9/16" High Pressure Tubing w/ .250" ID



Tube Outside Diameter Size (inches)	Connection Type	Orifice Size Inches (mm)	Rated C_V*	Pressure Rating psi (bar) @Room Temperature**
9/16	F562C40	0.109 (2.77)	0.28	40,000 (2760)

Notes
* Cv values shown are for 2-way straight valve pattern. For 2-way angle patterns, increase CV value 50%. (Based on water). Formula for converting Cv to volumetric flow can be found in Technical Information section.

** Maximum Allowable Working Pressures decrease as temperatures increase - see pressure/temperature rating guide in Technical Information section.

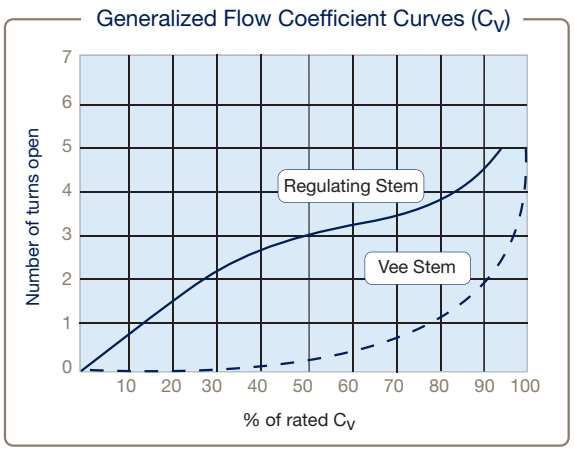

40VM Series Flow Curve for Vee and Regulating Stem Valves

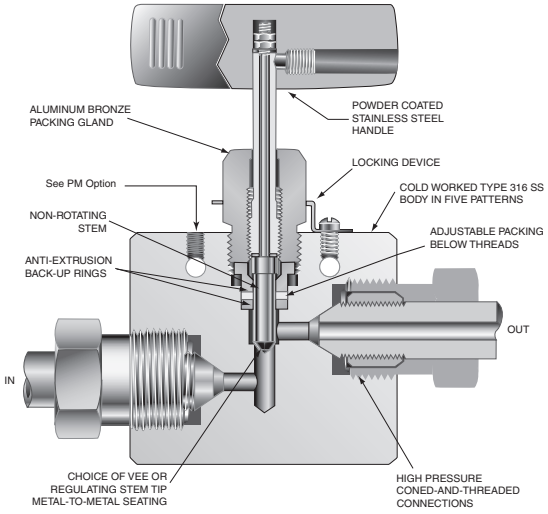

To ensure proper fit use Parker Autoclave tubing

Valve Packing Options:

Standard Parker Autoclave Engineers valves with nylon/leather/nylon packing may be operated from 40°F (4.4°C) to 230°F (110°C). Extended temperature packing is available for service from -423°F (-252°C) to 1200°F (650°C) by adding the following suffixes to catalog order number:

- **B** Cryogenic trim materials and PTFE Glass packing required when below 0°F (-18°C) to -50°F (-46°C)
- **LT** Extended stuffing box valve with PTFE Glass packing and Cryogenic trim materials to -423°F (-252°C)
- ***TG** Standard valve with PTFE-Glass packing -50°F (-46°C) to 600°F (316°C) (See also -B option above when below 0°F (-18°C)
- **GY** Standard valve with Graphite Yarn packing 32°F (0°C) to 800°F (427°C). Used when selecting HT option.
- **HT** Extended stuffing box valve with Graphite Yarn packing to 1200°F (650°C)

Note: *40VM and 60VM TG packing options supplied with PEEK/PTFE Glass/PEEK

(See "Technical Brochure" for Pressure/Temperature effect on temperatures above ambient.)

Tel: +45 63 12 83 00 | Email: ps@hymatik.com | www.hymatik.com | Hvidkaervej 27a, DK-5250 Odense SV, Denmark

Ordering Guide:

For complete information on available stem types, optional connections and additional valve options, see pages 26-27 or contact your Sales Representative. 40VM Series valves are furnished complete with connection components, unless otherwise specified. See High Pressure Fittings and Tubing brochure for compatible products.

Building a Part Number: ***Example: 40VM9071***

Example Part Number:	40VM	9	07	1	XX
Ordering Parameters/Options:	Valve Series	Outside Diameter Tube Size	Stem/Seat Type	Body Pattern	Options
Table Reference: (see below)	A	B	C	D	E

A - Valve Series	
40VM	High Pressure Needle Valve

B - Outside Diameter Tube Size	
9	9/16"

C - Stem/Seat Type	
07	Non-Rotating Vee Stem (on-off service)
08	Non-Rotating Regulating Stem (tapered tip for regulating and shutoff)
87	Vee Stem with Replaceable Seat (angle valve only)
88	Regulating Stem with Replaceable Seat (angle valve only)

Notes: Valve Manuals can be found on our website at **www.Autoclave.com**. Connection, Running and Seating Torques can be found in the product manual or in our Tools and Installation Catalog Section. Valves that have not been cycled for a substantial period of time may require higher initial actuation torque.

*Replaceable seat option is sold with two (2) seat surfaces 180° apart.

D - Body Pattern	
1	Two-Way Straight
2	Two-Way Angle (required with replaceable seat option)
3	Three-Way, Two on Pressure
4	Three-Way, One on Pressure
5	Three-Way, Two Stem Manifold Valve

E - Options	
K	Antivibration Gland (replaces standard gland)
B	All 316 SS Materials required when below 0°F (-18°C) (included in LT)
LT	Low Temperature Extension (to -423°F) (includes PTFE Glass packing)
TG	PTFE Glass (25%) Packing (-50° to 600°F)
GY	Graphite Yarn Packing (to 800°F)
HT	High Temperature Extension (to 1200°F) (includes GY packing)

Actuator Options - see Actuator brochure for Suffix Codes
Other materials available upon request. See Technical Brochure for list of common options.
See "Technical Brochure" for Pressure/Temperature effect on temperatures above ambient.

Material of Construction:

Item #	Description	Material
1	Hex Nut	300 Series SS
2	Thrust Washer	17-4 PH
3	Stem Sleeve	304 SS
4	Vee Stem, (9/16" 40VM shown)	17-4 PH
5	Thrust Washer	17-4 PH
6	Backup Washer	17-4 PH
7	Packing	Nylon
8	Packing Washer	17-4 PH
9	Handle, 3"	Aluminum
10	Packing Gland	AMPCO 45
11	Locking Device	302 SS
12	Screw, #10	18-8 SS
13	Packing	Leather
14	Replaceable Seat	17-4 PH
15	Valve Body	316 SS
16	Seat Retainer	316 SS

Typical spare parts found in Repair Kits

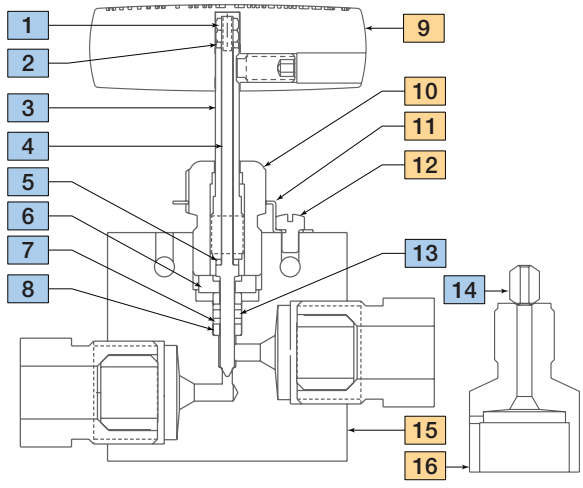

Panel Hole Sizes:

Valve Size	Inches			
	A	B	Screw Size	G
4 and 6	1.38	.22	#10-24	1.00
9	1.38	.22	#10-24	1.00

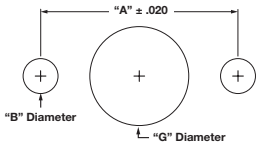

Needle Valve Panel Mount

Tel: +45 63 12 83 00 | Email: ps@hymatik.com | www.hymatik.com | Hvidkaervej 27a, DK-5250 Odense SV, Denmark

Basic Repair Kits for 316 SS Material:

Stem Type		Basic Repair Kit for 316 SS Material Outside Diameter Tube: 9/16"
2 Way Straight, 2 Way Angle 3 Way 2 On-Pressure, 3 Way 1 On-Pressure	VEE REG	R40VM7 R40VM8
2 Way, Replaceable Seat and Stem	VEE REG	R40VM872 R40VM882
3 Way, 2 Stem Manifold	VEE REG	R40VM075 R40VM085

When ordering for valves bought with additional suffix options, please include those exact suffix codes when ordering repair kit. (Example: the stem for a manual valve is manufactured differently for a pneumatically actuated valve and the repair kit must include the exact actuator suffix codes).
Valve Manuals can be found on our website at **www.Autoclave.com**,
Connection, Running and Seating Torques can be found in the product manual or in our Tools and Installation Catalog Section.

40VM Series Dimensions:

2 Way Straight

		Catalog Number
Stem Type	VEE REG	40VM9071 40VM9081
Outside Diameter Tube		9/16 (14.29)
Orifice Diameter		0.312 (7.93)
Dimensions: inches (mm)	A	2.62 (66.55)
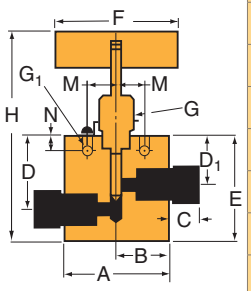	B	1.31 (33.35)
	C	0.72 (18.29)
	D	1.75 (44.45)
	D1	1.31 (33.32)
	E	2.50 (63.50)
	F	3.00 (76.20)
	G	1.00 (25.40)
	G1	0.28 (7.11)
	H*	5.01 (127.25)
	M	0.69 (17.53)
	N	0.38 (9.65)
Block Thickness		1.50 (38.10)

2 Way Angle

		Catalog Number
Stem Type	VEE REG	40VM9072 40VM9082
Outside Diameter Tube		9/16 (14.29)
Orifice Diameter		0.312 (7.93)
Dimensions: inches (mm)	A	2.62 (66.55)
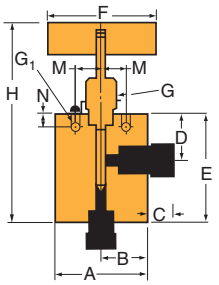	B	1.31 (33.35)
	C	0.72 (18.29)
	D	1.31 (44.45)
	D1	-
	E	2.81 (71.37)
	F	3.00 (76.20)
	G	1.00 (25.40)
	G1	0.28 (7.11)
	H*	5.32 (135.13)
	M	0.69 (17.53)
	N	0.38 (9.65)
Block Thickness		1.50 (38.10)

G - Packing Gland mounting hole drill size • G1 - Bracket mounting hole size • H* - Dimension is with stem in closed position
All dimensions for reference only and subject to change • For prompt service, Parker Autoclave stocks select products. Consult factory.

Tel: +45 63 12 83 00 | Email: ps@hymatik.com | www.hymatik.com | Hvidkaervej 27a, DK-5250 Odense SV, Denmark

40VM Series Dimensions:

3 Way, 2 On Pressure

		Catalog Number
Stem Type	VEE REG	40VM9073 40VM9083
Outside Diameter Tube		**9/16 (14.29)**
Orifice Diameter		0.312 (7.93)
Dimensions: inches (mm)	**A**	2.62 (66.55)
	B	1.31 (33.35)
	C	0.72 (18.29)
	D	1.75 (44.45)
	D1	1.31 (33.32)
	E	3.13 (79.38)
	F	3.00 (76.20)
	G	1.00 (25.40)
	G1	0.28 (7.11)
	H*	5.64 (143.13)
	M	0.69 (17.53)
	N	0.38 (9.65)
Block Thickness		1.50 (38.10)

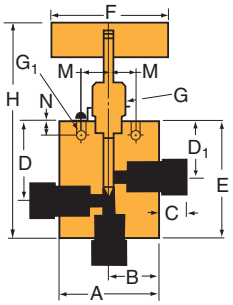

3 Way, 1 On Pressure

		Catalog Number
Stem Type	VEE REG	40VM9074 40VM9084
Outside Diameter Tube		**9/16 (14.29)**
Orifice Diameter		0.312 (7.93)
Dimensions: inches (mm)	**A**	2.62 (66.55)
	B	1.31 (33.35)
	C	0.72 (18.29)
	D	1.31 (44.45)
	D1	-
	E	2.81 (71.37)
	F	3.00 (76.20)
	G	1.00 (25.40)
	G1	0.28 (7.11)
	H*	5.32 (135.13)
	M	0.69 (17.53)
	N	0.38 (9.65)
Block Thickness		1.50 (38.10)

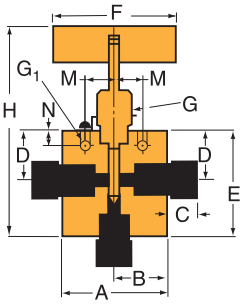

2 Way Angle Replaceable Seat

		Catalog Number
Stem Type	VEE REG	40VM9872 40VM9882
Outside Diameter Tube		**9/16 (14.29)**
Orifice Diameter		0.312 (7.93)
Dimensions: inches (mm)	**A**	2.62 (66.55)
	B	1.31 (33.35)
	C	0.72 (18.29)
	D	1.31 (33.35)
	D1	2.68 (68.07)
	E	2.63 (66.80)
	F	3.00 (76.20)
	G	1.00 (25.40)
	G1	0.28 (7.11)
	H*	6.85 (173.99)
	M	0.69 (17.53)
	N	0.38 (9.65)
Block Thickness		1.50 (38.10)

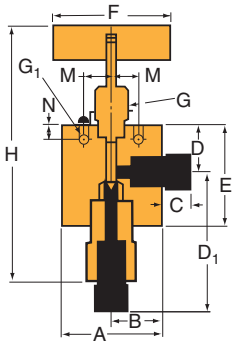

3 Way, 2 Stem Manifold

		Catalog Number
Stem Type	VEE REG	40VM9075 40VM9085
Outside Diameter Tube		**9/16 (14.29)**
Orifice Diameter		0.312 (7.93)
Dimensions: inches (mm)	**A**	2.62 (66.55)
	B	1.31 (33.35)
	C	0.72 (18.29)
	D	2.06 (52.37)
	D1	1.31 (33.32)
	E	4.12 (104.65)
	F	3.00 (76.20)
	G	1.00 (25.40)
	G1	0.28 (7.11)
	H*	6.63 (168.40)
	M	0.69 (17.53)
	N	0.38 (9.65)
Block Thickness		1.50 (38.10)

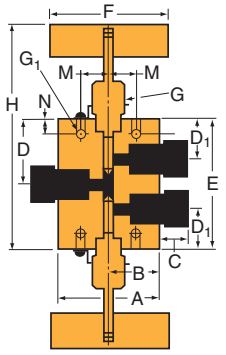

G - Packing Gland mounting hole drill size • G1 - Bracket mounting hole size • H* - Dimension is with stem in closed position
All dimensions for reference only and subject to change • For prompt service, Parker Autoclave stocks select products. Consult factory.

60VM Series: Pressures to 60,000 psi (4137 bar)

Temperatures from -423°F to 1200°F (-253°C to 650°C)



Tube Outside Diameter Size (inches)	Connection Type	Orifice Size Inches (mm)	Rated C_V*	Pressure Rating psi (bar) @Room Temperature**
1/4	F250C	0.062 (1.57)	0.08	60,000 (4137)
3/8	F375C	0.062 (1.57)	0.09	60,000 (4137)
9/16	F562C	0.0789 (1.98)	0.14	60,000 (4137)

Notes
* Cv values shown are for 2-way straight valve pattern. For 2-way angle patterns, increase CV value 50%. (Based on water). Formula for converting Cv to volumetric flow can be found in Technical Information section.

** Maximum Allowable Working Pressures decrease as temperatures increase - see pressure/temperature rating guide in Technical Information section.

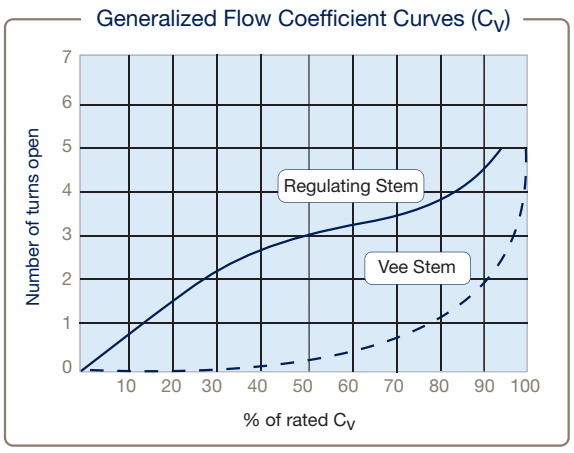

60VM Series Flow Curve for Vee and Regulating Stem Valves

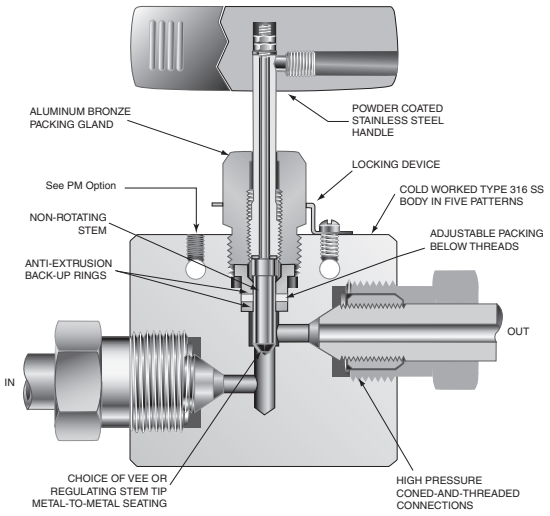

To ensure proper fit use Parker Autoclave tubing

Valve Packing Options:

Standard Parker Autoclave Engineers valves with nylon/leather/nylon packing may be operated from 40°F (4.4°C) to 230°F (110°C). Extended temperature packing is available for service from -423°F (-252°C) to 1200°F (650°C) by adding the following suffixes to catalog order number:

- **B** Cryogenic trim materials and PTFE Glass packing required when below 0°F (-18°C) to -50°F (-46°C)
- **LT** Extended stuffing box valve with PTFE Glass packing and Cryogenic trim materials to -423°F (-252°C)
- ***TG** Standard valve with PTFE-Glass packing -50°F (-46°C) to 600°F (315°C) (See also -B option above when below 0°F (-18°C)
- **GY** Standard valve with Graphite Yarn packing 32°F (0°C) to 800°F (427°C). Used when selecting HT option.
- **HT** Extended stuffing box valve with Graphite Yarn packing to 1200°F (650°C)

Note: 40VM and *60VM TG packing options supplied with PEEK/PTFE Glass/PEEK

(See “Technical Brochure” for Pressure/Temperature effect on temperatures above ambient.)

Tel: +45 63 12 83 00 | Email: ps@hymatik.com | www.hymatik.com | Hvidkaervej 27a, DK-5250 Odense SV, Denmark

Ordering Guide:

For complete information on available stem types, optional connections and additional valve options, see pages 26-27 or contact your Sales Representative. 60VM Series valves are furnished complete with connection components, unless otherwise specified. See High Pressure Fittings and Tubing brochure for compatible products.

Building a Part Number: ***Example: 60VM4071***

Example Part Number:	60VM	4	07	1	XX
Ordering Parameters/Options:	Valve Series	Outside Diameter Tube Size	Stem/Seat Type	Body Pattern	Options
Table Reference: (see below)	A	B	C	D	E

A - Valve Series	
60VM	High Pressure Needle Valve

B - Outside Diameter Tube Size	
4	1/4"
6	3/8"
9	9/16"

C - Stem/Seat Type	
07	Non-Rotating Vee Stem (on-off service)
08	Non-Rotating Regulating Stem (tapered tip for regulating and shutoff)
87	Vee Stem with Replaceable Seat (angle valve only)
88	Regulating Stem with Replaceable Seat (angle valve only)

Notes: VValve Manuals can be found on our website at **www.Autoclave.com**. Connection, Running and Seating Torques can be found in the product manual or in our Tools and Installation Catalog Section. Valves that have not been cycled for a substantial period of time may require higher initial actuation torque.

*Replaceable seat option is sold with two (2) seat surfaces 180° apart.

D - Body Pattern	
1	Two-Way Straight
2	Two-Way Angle
3	Three-Way, Two on Pressure
4	Three-Way, One on Pressure
5	Three-Way, Two Stem Manifold Valve

E - Options	
K	Antivibration Gland (replaces standard gland)
B	All 316 SS Materials required when below 0°F (-18°C) (included in LT)
LT	Low Temperature Extension (to -423°F) (includes PTFE packing)
TG	PTFE Glass (25%) Packing (-50° to 600°F)
GY	Graphite Yarn Packing (to 800°F)
HT	High Temperature Extension (to 1200°F) (includes GY packing)
SOG	NACE MR0175 Material, Hardness Verification/Certificate
HYG	Hydrogen/Helium Cycle Life Upgrade/Seat Testing

Actuator Options - see individual brochures for Suffix Codes
Other materials available upon request. See Technical Brochure for list of common options.
See "Technical Brochure" for Pressure/Temperature effect on temperatures above ambient.

Material of Construction:

Item #	Description	Material
1	Hex Nut	300 Series SS
2	Thrust Washer	17-4 PH
3	Stem Sleeve	304 SS
4	Vee Stem	17-4 PH
5	Packing Gland	AMPCO 45
6	Thrust Washer	17-4 PH
7	Backup Washer	17-4 PH
8	Packing	Leather
9	Packing Washer	17-4 PH
10	Handle	316 SS
11	Screw, #10	18-8 SS
12	Locking Device	302 SS
13	Packing Washer	17-4 PH
14	Packing	Nylon
15	Body, (3/8" 60VM shown)	316 SS
16	Replaceable Seat	17-4 PH
17	Seat Retainer	316 SS
	Typical spare parts found in Repair Kits	

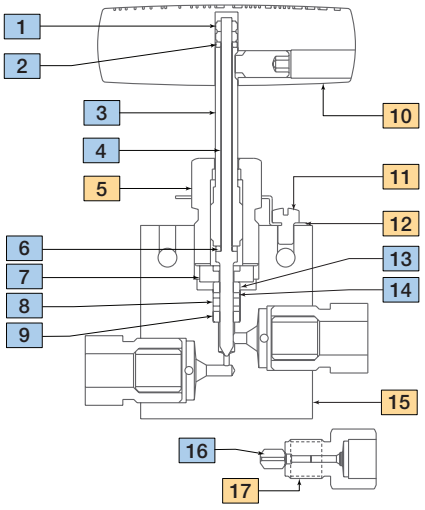

Panel Hole Sizes:

Valve Size	Inches			
	A	B	Screw Size	G
4 and 6	1.38	.22	#10-24	1.00
9	1.38	.22	#10-24	1.00

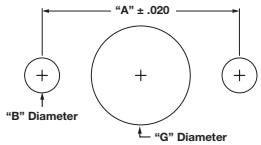

Needle Valve Panel Mount

Tel: +45 63 12 83 00 | Email: ps@hymatik.com | www.hymatik.com | Hvidkaervej 27a, DK-5250 Odense SV, Denmark

Basic Repair Kits for 316 SS Material:

Stem Type		Basic Repair Kit for 316 SS Material Outside Diameter Tube: 1/4", 3/8", 9/16"
2 Way Straight, 2 Way Angle 3 Way 2 On-Pressure, 3 Way 1 On-Pressure	VEE REG	R60VM7 R60VM8
2 Way, Replaceable Seat and Stem	VEE REG	R60VM872 R60VM882
3 Way, 2 Stem Manifold	VEE REG	R60VM075 R60VM085

When ordering for valves bought with additional suffix options, please include those exact suffix codes when ordering repair kit. (Example: the stem for a manual valve is manufactured differently for a pneumatically actuated valve and the repair kit must include the exact actuator suffix codes).
Valve Manuals can be found on our website at **www.Autoclave.com**,
Connection, Running and Seating Torques can be found in the product manual or in our Tools and Installation Catalog Section.

60VM Series Dimensions:

2 Way Straight

Stem Type	VEE REG	Catalog Number 60VM4071 60VM4081	 60VM6071 60VM6081	 60VM9071 60VM9081
Outside Diameter Tube		**1/4 (6.35)**	**3/8 (9.53)**	**9/16 (14.29)**
Orifice Diameter		0.94 (2.39)	0.125 (3.18)	0.125 (3.18)
Dimensions: inches (mm)	**A**	2.00 (50.80)	2.00 (50.80)	2.62 (66.55)
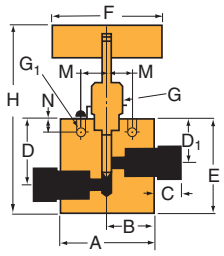	**B**	1.00 (25.40)	1.00 (25.40)	1.31 (33.27)
	C	0.50 (12.70)	0.53 (13.46)	0.72 (18.29)
	D	1.69 (42.93)	1.69 (42.93)	1.75 (45.45)
	D1	1.31 (33.27)	1.31 (33.27)	1.31 (33.27)
	E	2.12 (53.85)	2.25 (57.15)	2.50 (63.50)
	F	3.00 (76.20)	3.00 (76.20)	3.00 (76.20)
	G	1.00 (25.40)	1.00 (25.40)	1.00 (25.40)
	G1	0.22 (5.59)	0.22 (5.59)	0.28 (7.11)
	H*	4.75 (120.65)	4.75 (120.65)	5.13 (130.30)
	M	0.69 (17.53)	0.69 (17.53)	0.69 (17.53)
	N	0.38 (9.65)	0.38 (9.65)	0.38 (9.65)
Block Thickness		1.00 (25.40)	1.00 (25.40)	1.50 (38.10)

2 Way Angle

Stem Type	VEE REG	Catalog Number 60VM4072 60VM4082	 60VM6072 60VM6082	 60VM9072 60VM9082
Outside Diameter Tube		**1/4 (6.35)**	**3/8 (9.53)**	**9/16 (14.29)**
Orifice Diameter		0.94 (2.39)	0.125 (3.18)	0.125 (3.18)
Dimensions: inches (mm)	**A**	2.00 (50.80)	2.00 (50.80)	2.62 (66.55)
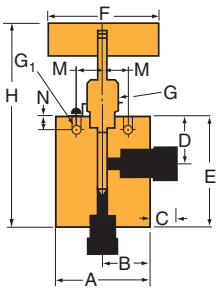	**B**	1.00 (25.40)	1.00 (25.40)	1.31 (33.27)
	C	0.50 (12.70)	0.53 (13.46)	0.72 (18.29)
	D	1.31 (33.27)	1.31 (33.27)	1.31 (33.27)
	D1	-	-	-
	E	2.38 (60.45)	2.62 (66.55)	2.81 (71.37)
	F	3.00 (76.20)	3.00 (76.20)	3.00 (76.20)
	G	1.00 (25.40)	1.00 (25.40)	1.00 (25.40)
	G1	0.22 (5.59)	0.22 (5.59)	0.28 (7.11)
	H*	5.00 (127.00)	5.25 (133.35)	5.44 (138.14)
	M	0.69 (17.53)	0.69 (17.53)	0.69 (17.53)
	N	0.38 (9.65)	0.38 (9.65)	0.38 (9.65)
Block Thickness		1.00 (25.40)	1.00 (25.40)	1.50 (38.10)

G - Packing Gland mounting hole drill size • G1 - Bracket mounting hole size • H* - Dimension is with stem in closed position
All dimensions for reference only and subject to change • For prompt service, Parker Autoclave stocks select products. Consult factory.

Tel: +45 63 12 83 00 | Email: ps@hymatik.com | www.hymatik.com | Hvidkaervej 27a, DK-5250 Odense SV, Denmark

60VM Series Dimensions:

3 Way, 2 On Pressure

Stem Type	VEE REG	Catalog Number		
		60VM4073 60VM4083	60VM6073 60VM6083	60VM9073 60VM9083
Outside Diameter Tube		1/4 (6.35)	3/8 (9.53)	9/16 (14.29)
Orifice Diameter		0.94 (2.39)	0.125 (3.18)	0.125 (3.18)
Dimensions: inches (mm)	A	2.00 (50.80)	2.00 (50.80)	2.62 (66.55)
	B	1.00 (25.40)	1.00 (25.40)	1.31 (33.27)
	C	0.50 (12.70)	0.53 (13.46)	0.72 (18.29)
	D	1.69 (42.93)	1.69 (42.93)	1.75 (45.45)
	D1	1.31 (33.27)	1.31 (33.27)	1.31 (33.27)
	E	2.38 (60.45)	2.75 (68.86)	3.03 (76.96)
	F	3.00 (76.20)	3.00 (76.20)	3.00 (76.20)
	G	1.00 (25.40)	1.00 (25.40)	1.00 (25.40)
	G1	0.22 (5.59)	0.22 (5.59)	0.28 (7.11)
	H*	4.75 (120.65)	4.87 (123.70)	5.13 (130.30)
	M	0.69 (17.53)	0.69 (17.53)	0.69 (17.53)
	N	0.38 (9.65)	0.38 (9.65)	0.38 (9.65)
Block Thickness		1.00 (25.40)	1.00 (25.40)	1.50 (38.10)

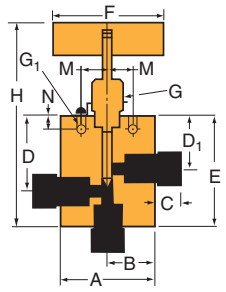

3 Way, 1 On Pressure

Stem Type	VEE REG	Catalog Number		
		60VM4074 60VM4084	60VM6074 60VM6084	60VM9074 60VM9084
Outside Diameter Tube		1/4 (6.35)	3/8 (9.53)	9/16 (14.29)
Orifice Diameter		0.94 (2.39)	0.125 (3.18)	0.125 (3.18)
Dimensions: inches (mm)	A	2.00 (50.80)	2.00 (50.80)	2.62 (66.55)
	B	1.00 (25.40)	1.00 (25.40)	1.31 (33.27)
	C	0.50 (12.70)	0.53 (13.46)	0.72 (18.29)
	D	1.31 (33.27)	1.31 (33.27)	1.31 (33.27)
	D1	-	-	-
	E	2.38 (60.45)	2.62 (66.55)	2.81 (71.37)
	F	3.00 (76.20)	3.00 (76.20)	3.00 (76.20)
	G	1.00 (25.40)	1.00 (25.40)	1.00 (25.40)
	G1	0.22 (5.59)	0.22 (5.59)	0.28 (7.11)
	H*	5.00 (127.00)	5.25 (133.35)	5.44 (138.18)
	M	0.69 (17.53)	0.69 (17.53)	0.69 (17.53)
	N	0.38 (9.65)	0.38 (9.65)	0.38 (9.65)
Block Thickness		1.00 (25.40)	1.00 (25.40)	1.50 (38.10)

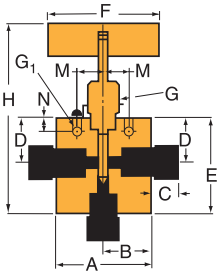

2 Way Angle Replaceable Seat

Stem Type	VEE REG	Catalog Number		
		60VM4872 60VM4882	60VM6872 60VM6882	60VM9872 60VM9882
Outside Diameter Tube		1/4 (6.35)	3/8 (9.53)	9/16 (14.29)
Orifice Diameter		0.94 (2.39)	0.125 (3.18)	0.125 (3.18)
Dimensions: inches (mm)	A	2.00 (50.80)	2.00 (50.80)	2.62 (66.55)
	B	1.00 (25.40)	1.00 (25.40)	1.31 (33.27)
	C	0.50 (12.70)	0.53 (13.46)	0.72 (18.29)
	D	1.31 (33.27)	1.31 (33.27)	1.31 (33.27)
	D1	2.12 (53.85)	2.36 (59.94)	2.68 (68.07)
	E	2.62 (66.55)	2.62 (66.55)	2.62 (66.55)
	F	3.00 (76.20)	3.00 (76.20)	3.00 (76.20)
	G	1.00 (25.40)	1.00 (25.40)	1.00 (25.40)
	G1	0.22 (5.59)	0.22 (5.59)	0.28 (7.11)
	H*	6.28 (159.51)	6.52 (154.60)	6.90 (175.26)
	M	0.69 (17.53)	0.69 (17.53)	0.69 (17.53)
	N	0.38 (9.65)	0.38 (9.65)	0.38 (9.65)
Block Thickness		1.00 (25.40)	1.00 (25.40)	1.50 (38.10)

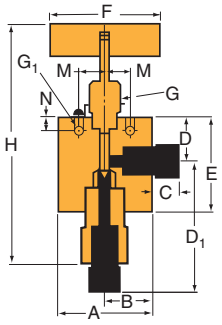

3 Way, 2 Stem Manifold

Stem Type	VEE REG	Catalog Number		
		60VM4075 60VM4085	60VM6075 60VM6085	60VM9075 60VM9085
Outside Diameter Tube		1/4 (6.35)	3/8 (9.53)	9/16 (14.29)
Orifice Diameter		0.94 (2.39)	0.125 (3.18)	0.125 (3.18)
Dimensions: inches (mm)	A	2.00 (50.80)	2.00 (50.80)	2.62 (66.55)
	B	1.00 (25.40)	1.00 (25.40)	1.31 (33.27)
	C	0.50 (12.70)	0.53 (13.46)	0.72 (18.29)
	D	1.72 (43.69)	1.88 (47.75)	2.06 (52.32)
	D1	1.31 (33.27)	1.31 (33.27)	1.31 (33.27)
	E	3.44 (87.38)	3.75 (95.25)	4.12 (104.65)
	F	3.00 (76.20)	3.00 (76.20)	3.00 (76.20)
	G	1.00 (25.40)	1.00 (25.40)	1.00 (25.40)
	G1	0.22 (5.59)	0.22 (5.59)	0.28 (7.11)
	H*	6.07 (154.18)	6.37 (161.80)	6.37 (161.80)
	M	0.69 (17.53)	0.69 (17.53)	0.69 (17.53)
	N	0.38 (9.65)	0.38 (9.65)	0.38 (9.65)
Block Thickness		1.00 (25.40)	1.00 (25.40)	1.50 (38.10)

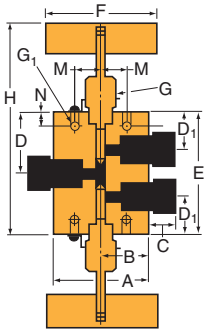

G - Packing Gland mounting hole drill size • G1 - Bracket mounting hole size • H* - Dimension is with stem in closed position
All dimensions for reference only and subject to change • For prompt service, Parker Autoclave stocks select products. Consult factory.

100VM & 150V Series: Pressures to 150,000 psi (10350 bar)



Tube Outside Diameter Size (inches)	Connection Type	Orifice Size Inches (mm)	Rated C_V*	Pressure Rating psi (bar) @Room Temperature**
1/4 (100VM)	F312C150	0.062 (1.57)	0.09	100,000 (10350)
5/16 (100VM)	F312C150	0.062 (1.57)	0.09	100,000 (10350)
3/8 (100VM)	F312C150	0.062 (1.57)	0.09	100,000 (10350)
9/16 (100VM)	F562C	0.188 (4.75)	0.65	100,000 (10350)
5/16 (150V)	F312C150	0.062 (1.57)	0.06	150,000 (10342)

Notes
* C_V values shown are for 2-way straight valve pattern. For 2-way angle patterns, increase C_V value 50%. (Based on water)

** For complete temperature ratings see pressure/temperature rating guide in Technical Information section.

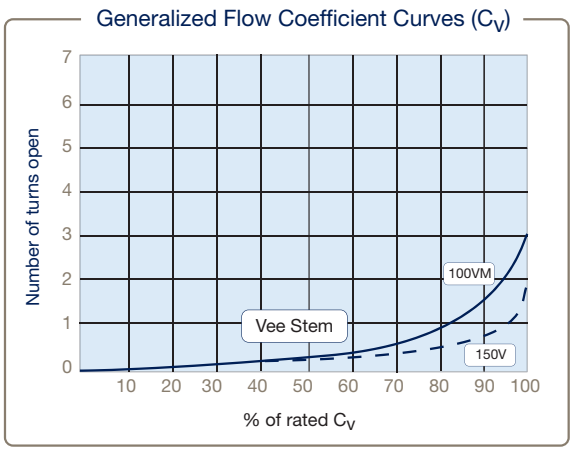

100VM and 150V Series Flow Curve for Vee Stem Valves

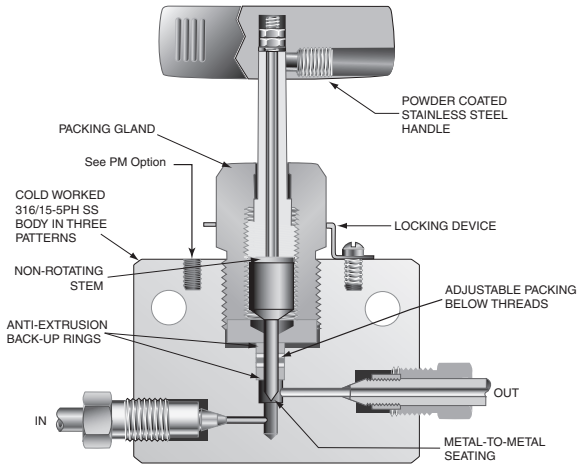

100VM Series

Note: 100VM9 Series comes with a T-Handle. To ensure proper fit use Parker Autoclave tubing

Valve Packing Options:

Standard Parker Autoclave Engineers valves with nylon/ leather/nylon packing may be operated from 40°F (4.4°C) to 230°F (110°C).

Note: Stem must be actuated with 15/16" hex size torque wrench (offered in Tools and Installation Catalog)

Shut-off torque = 32 ft-lbf (force in excess could damage stem)
Running torque = 26 ft-lbf

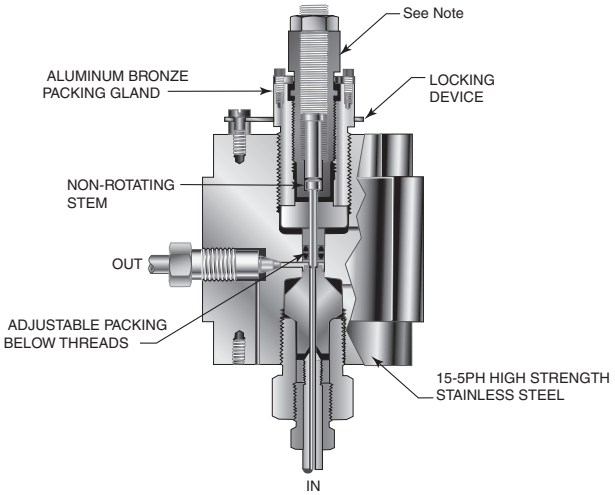

150V Series

To ensure proper fit use Parker Autoclave tubing

Tel: +45 63 12 83 00 | Email: ps@hymatik.com | www.hymatik.com | Hvidkaervej 27a, DK-5250 Odense SV, Denmark

Ordering Guide:

For complete information on available stem types, optional connections and additional valve options, see pages 26-27 or contact your Sales Representative. 100VM Series valves are furnished complete with connection components, unless otherwise specified.

Building a Part Number: ***Example: 100VM4071***

Example Part Number:	100VM	4	07	1	XX
Ordering Parameters/Options:	Valve Series	Outside Diameter Tube Size	Stem/Seat Type	Body Pattern	Options
Table Reference: (see below)	A	B	C	D	E

A - Valve Series	
100VM	High Pressure Needle Valve
150V	High Pressure Needle Valve (5/16" 150Ksi tubing only)

B - Outside Diameter Tube Size	
4	1/4"
5	5/16"
6	3/8"
9	9/16" (this size requires -155 material option)

C - Stem/Seat Type	
07	Non-Rotating Vee Stem (on-off service)
87	Vee Stem with Replaceable Seat (angle valve only)

D - Body Pattern	
1	Two-Way Straight
2	Two-Way Angle (Required for 150V valves)

E - Options	
Pneumatic Actuator Options - see Actuator brochure for Suffix Codes	
-155	15-5 PH material (mandatory for size 9 valve)

Notes: Valve Manuals can be found on our website at **www.Autoclave.com**. Connection, Running and Seating Torques can be found in the product manual or in our Tools and Installation Catalog Section. Valves that have not been cycled for a substantial period of time may require higher initial actuation torque.

Material of Construction (100VM):

Item #	Description	Material
1	Hex Nut, #10-32	316 SS
2	Thrust Washer	17-4 PH
3	Stem Sleeve	304 SS
4	Vee Stem, (3/8" 100VM shown)	MP35N
5	Packing Gland	AMPCO 45
6	Thrust Washer	17-4 PH
7	Backup Washer	15-5 PH
8	Packing Washer	Berylco
9	Packing	Nylon
10	Packing	Leather
11	Handle	316 SS
12	Screw, #10	18-8 SS
13	Locking Device	302 SS
14	Packing	Nylon
15	Packing Washer	Berylco
16	Body, (3/8" 100VM shown)	316 SS
•	Replaceable Seat	17-4 PH
•	Seat Retainer	316 SS
	Typical spare parts found in Repair Kits	

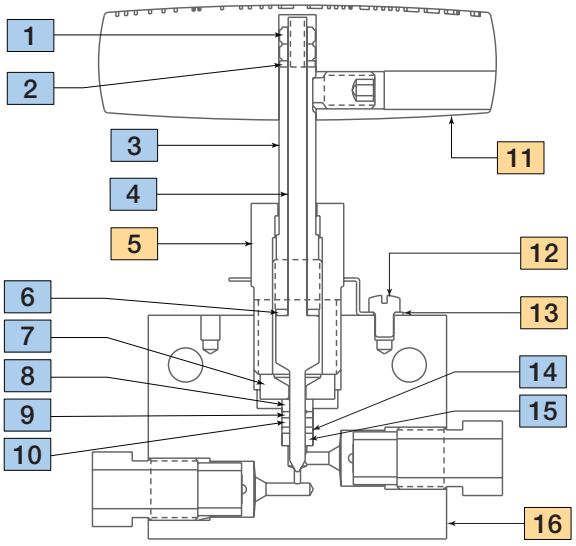

Panel Hole Sizes:

Valve Size	Inches			
	A	B	Screw Size	G
4 and 6	2.25	.22	#10-24	1.12
9	1.75	.22	#10-24	1.12

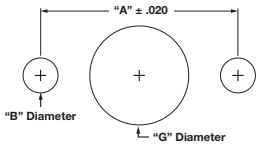

Needle Valve Panel Mount

Material of Construction (150V):

Item #	Description	Material
1	Hex Nut, 7/16-14	300 Series SS
2	Stem Retainer	316 SS
3	Stem Sleeve	AMPCO 45
4	Packing Gland	MP35N
5	Dowel Pin, 5/16"	Steel
6	Stem	Tool Steel
7	Packing Washer	E52100 Steel
8	Collar	316 SS
9	Seat Nut	630 SS
10	Gland	316 SS
11	Hex Nut, 7/16 - 14	300 Series SS
12	Stop Segment	Carbon Steel
13	Screw, #10	300 Series SS
14	Locking Device	302 SS
15	Spacer	304 SS
16	Bottom Washer	Tool Steel
17	Seat	NI Maraging Steel
18	Body, (5/16" 150VM shown)	4340
19	Wedge Ring	Berylco
20	Packing	PTFE
21	Packing	Leather
22	Wedge Ring	Berylco

Typical spare parts found in Repair Kits

Note:
150V Shutoff torque = 32 ft-lbf (Force in excess could damage stem)
150V Running torque - 26 ft-lbf

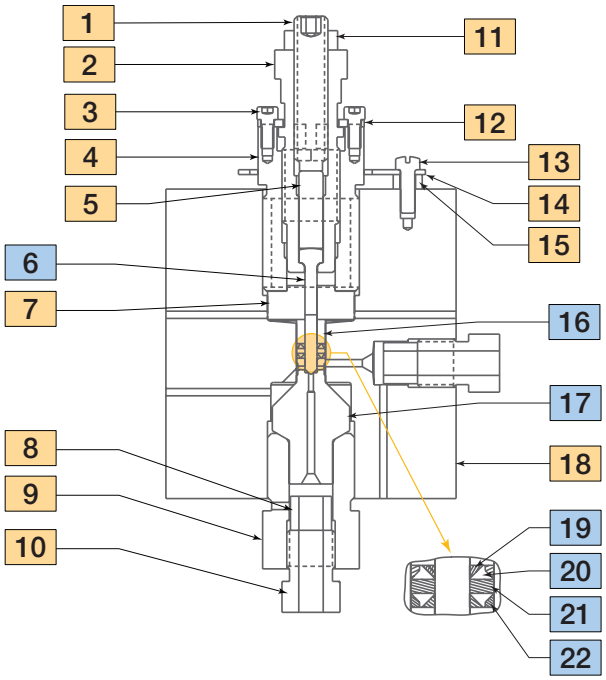

Basic Repair Kits for 316 SS Material:

Stem Type		Basic Repair Kit for 316 SS Material		
		Valve Type		
		100VM4 to 6	100VM9	150V
2 Way Straight, 2 Way Angle 3 Way 2 On-Pressure, 3 Way 1 On-Pressure (All sizes)	VEE	R100VM407 R100VM507 R100VM607	R100VM907	N/A
2 Way, Replaceable Seat and Stem	VEE	R100VM872	R100VM9872	R150V5072

When ordering for valves bought with additional suffix options, please include those exact suffix codes when ordering repair kit. (Example: the stem for a manual valve is manufactured differently for a pneumatically actuated valve and the repair kit must include the exact actuator suffix codes).
Valve Manuals can be found on our website at **www.Autoclave.com**,
Connection, Running and Seating Torques can be found in the product manual or in our Tools and Installation Catalog Section.

Tel: +45 63 12 83 00 | Email: ps@hymatik.com | www.hymatik.com | Hvidkaervej 27a, DK-5250 Odense SV, Denmark

100VM & 150V Series Dimensions:

2-Way Straight

		Catalog Number			
Stem Type	VEE	100VM			
Outside Diameter Tube		1/4 (6.35)	5/16 (7.93)	3/8 (9.53)	9/16 (14.3)
Orifice Diameter		0.94 (2.39)	0.062 (1.57)	0.125 (3.18)	0.188 (4.8)
Dimensions: inches (mm)	A	3.00 (76.20)			3.00 (76.20)
	B	1.50 (38.10)			1.50 (38.10)
	C	0.52 (13.21)			0.75 (19.05)
	D	1.75 (44.45)			2.68 (68.07)
	D1	1.44 (36.58)			2.18 (55.37)
	E	2.25 (57.15)			3.50 (88.9
	F	4.00 (101.60)			10.34 (262.6)
	G	1.12 (28.45)			1.12 (28.45)
	G1	0.34 (8.64)			0.44 (11.18)
	H*	5.35 (136.00)			6.8 (172.7)
	M	0.88 (22.4)			0.88 (22.4)
	N	0.50 (12.70)			0.63 (16.0)
	*P	1.125 (28.6)			-
Block Thickness		1.38 (35.05)			2.00 (50.8)

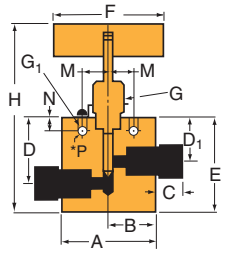

*P = Mounting holes in Sizes 4 to 6 are wider than panel mtg shown - see dimension P = distance from centerline

2 Way Angle Replaceable Seat

		Catalog Number			
Stem Type	VEE	100VM			
Outside Diameter Tube		1/4 (6.35)	5/16 (7.93)	3/8 (9.53)	9/16 (14.3)
Orifice Diameter		0.94 (2.39)	0.062 (1.57)	0.125 (3.18)	0.188 (4.8)
Dimensions: inches (mm)	A	2.25 (57.15)			3.00 (76.20)
	B	1.50 (38.10)			1.50 (38.10)
	C	0.52 (13.21)			0.72 (18.28)
	D	-			-
	D1	1.44 (36.58)			2.20 (55.88)
	E	3.00 (76.20)			3.80 (96.52)
	F	4.00 (101.60)			10.34 (262.6)
	G	1.12 (28.45)			1.12 (28.45)
	G1	0.34 (8.64)			0.44 (11.18)
	H*	7.57 (192.30)			7.1 (180.3)
	M	0.88 (22.4)			0.88 (22.4)
	N	0.50 (12.70)			0.63 (16.0)
	*P	1.125 (28.6)			-
Block Thickness		1.38 (35.05)			2.00 (50.8)

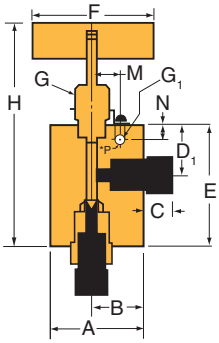

*P = Mounting holes in Sizes 4 to 6 are wider than panel mtg shown - see dimension P = distance from centerline

2 Way Angle Replaceable Seat (150V Valve only)

		Catalog Number
Stem Type	VEE	150V5072
Outside Diameter Tube		5/16 (7.93)
Orifice Diameter		0.062 (1.57)
Dimensions: inches (mm)	A	3.75 (95.25)
	B	1.88 (47.63)
	C	0.52 (13.21)
	D	2.25 (57.15)
	D1	2.63 (66.80)
	E	4.00 (101.60)
	F	-
	G	1.65 (41.91)
	G1	-
	H*	7.12 (180.85)
	M	1.25** (31.75)
	N	-
		**(2) 1/4"-20 mounting holes 180° apart and (1) locking device screw 90° apart

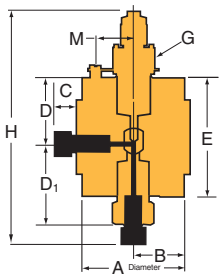

G - Packing Gland mounting hole drill size • G1 - Bracket mounting hole size • H* - Dimension is with stem in closed position
All dimensions for reference only and subject to change • For prompt service, Parker Autoclave stocks select products. Consult factory.

Valve Options: (For Actuator Options please reference specific Actuator brochure)



Pneumatic Valve Actuators:

The need to control process and vent valves from a remote location makes air operated valves a vital component to many processing operations. All Parker Autoclave Engineers' valves are available with piston type actuators. Five sizes of air actuators (light, mini-light, medium, heavy duty or extra heavy, single and double stage) are offered to meet the service requirements of Parker Autoclave Engineers' Low, Medium and High Pressure needle valves. Both air-to-open (normally closed) and air-to-close (normally open) designs are included in the product line. Optional air to open AND close actuators available upon request. Please see our Pneumatic Valve Actuator Brochure to help size the proper actuator for your application.



Electric Valve Actuators:

Remotely controlling process flow at high pressure enhances safety and lowers labor costs. Parker Autoclave Engineers developed a flow control valve available in several models including weatherproof and explosionproof options.

The Electrically Actuated Shut-off/Flow Regulating Actuator (FRC Series) is available for most of our Needle Valves through 9/16" tubing size and up to 60,000 psi maximum pressure. Explosion proof version is rated for hydrogen service and can withstand wide process temperature ranges.

Stem Options:

Most Parker Autoclave Engineers' valves are available with either Vee (on-off) or Regulating (Flow Control) Stems in our standard valve body seat or with our optional replaceable seat as shown below:

VEE Stem

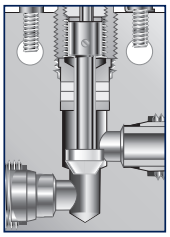

The Vee stem is used for direct on-off, metal-to-metal shut-off with quick-opening flow characteristics.

Regulating Stem

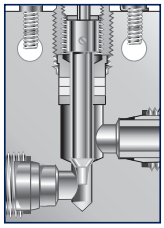

In some applications, more precise flow control is required than is possible with a Vee stem. For these cases, Autoclave offers a non-rotating, two-piece regulating stem which can be used for both control and shut-off. While it is not as precise as the control associated with the MicroMetering stem, especially with smaller flows, it does offer substantially better control than the Vee stem.

Replaceable Seat
(with Vee Stem)

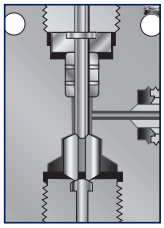

Replaceable seat option is only available with Right-Angle Style body. Replaceable seat is supplied as standard with an additional seat - rotate to use second side. Can be used with either stem type. Options include Stellite material or N-Dura coating to increase service life.

Tel: +45 63 12 83 00 | Email: ps@hymatik.com | www.hymatik.com | Hvidkaervej 27a, DK-5250 Odense SV, Denmark

Valve Options: (For Actuator Options please reference specific Actuator brochure)

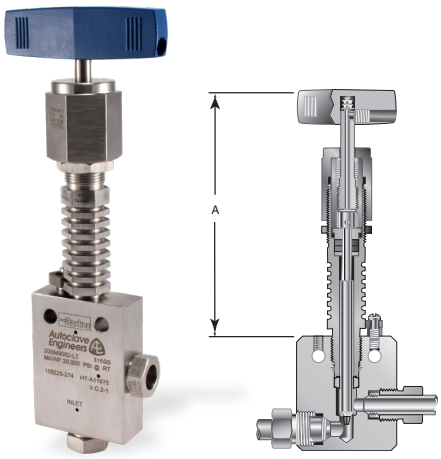

High/Low Temperature Extension:

Required with extreme temperatures to remove packing from contact with flow stream.

-HT High Temperature (over 800°F (427°C))

-LT Low Temperature (under -100°F (-73°C))

Valve Series	Outside Diameter Tube Size (inches)	Dimensions "A" inches (mm)
30SC 30VM 40VM 43SC 60VM	1/4"	6.00 (152)
	3/8"	6.00 (152)
	9/16"	6.00 (152)
	1"	9.42 (239)
HT option code includes Graphite (-GY) packing LT option code includes 316 SS Trim material and PTFE packing		

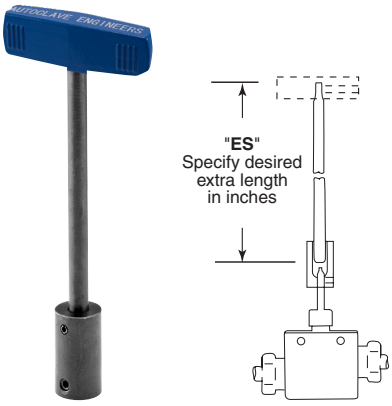

ES Stem Extender:

Stem extenders are offered for High and Low temperature operation or to extend through panel or barricade.

To order valve with Stem Extender, add "**ES-**" and length (6", 12", 18", 24") to beginning of valve part number e.g. ES12-60VM6071. Other lengths to special order.

To order Stem Extender only, provide valve model prefix e.g. ES12-60VM6. Handle not included – use same provided with original valve.



Needle Valve Clam Shell Handle Lockout:

(order separately using part numbers shown below, padlock not included)

Clam Shell Handle locks are provided to lockout valves in open or closed position preventing unauthorized personnel from actuating valve during shutdown or emergency situations. This clamshell design is available in four (4) sizes dependent on handle length:

P/N AE004855 – 1" to 2.5" handle length
P/N 90088 – 2.5" to 5.0" handle length
P/N 90194 – 6.5" to 10" handle length
P/N AE004350 – 8" to 13" handle length

Tel: +45 63 12 83 00 | Email: ps@hymatik.com | www.hymatik.com | Hvidkaervej 27a, DK-5250 Odense SV, Denmark

Needle Valve

NPT (Pipe Style) Threaded Connection 15,000 psi (1034 bar)

10P and 15P Series



Principle of Operation:

P Series (Pipe Style) Needle Valves are made available for those customers that prefer using pipe instead of high pressure instrumentation tubing for pressures up to 15,000 psi MAWP. Designed using high tensile strength cold worked 316 Stainless Steel material and “ANPT” (Aerospace version - compatible with all ANSI B1.20.1 NPT connections) thread form. Use only with similar valves, fittings and pipe capable of same or lower pressures.

Pipe Valve Features:

- P Series valve design provides in-line pipe connections for 1/4" to 1" pipe sizes.
- UNS S31600 cold worked 316 Stainless Steel material as standard. See Technical brochure for additional material options.
- Non-rotating stem prevents stem/seat galling
- Metal-to-metal seating achieves bubble-tight shut-off, longer stem/seat life in abrasive flow, greater durability for repeated on/off cycles and excellent corrosion resistance. These valves can be used in liquid or gas applications.
- PTFE packing below stem threads provide dependable stem and body sealing. Optional packing materials available.
- Choice of Vee or Flow Regulating stem tips. N-Dura Coating or Stellite® material option for severe service
- Operating temperature range from -423° to 400°F (-252° to 204°C) (Limit of PTFE sealant tape)

Parker Autoclave Engineers valves are complemented by a complete line of fittings, needle and ball valves, relief and check valves.

Note:

NPT Pipe Thread Connections:

NPT threads must be sealed using a high quality PTFE tape (3 wraps minimum) and/or thread sealant paste product suitable for process temperatures. Refer to thread sealant manufacturer’s instructions for application instructions. A good thread lubrication product (metal flake style) capable of process temperatures is also necessary to prevent thread galling.

Sealing performance may vary based on many factors such as pressure, temperature, media, thread quality, thread material, proper engagement, and proper use of thread sealant.

End user should limit the number of times an NPT fitting is assembled and disassembled as thread deformation during assembly will result in deteriorating seal quality over time.

All Parker Autoclave Engineers products are designed in accordance with ASME B31.3 Chapter IX High Pressure Piping standards.

ENGINEERING YOUR SUCCESS.

P Series Needle Valve: Pressures to 15,000 psi (1034 bar)



Tube Outside Diameter Size (inches)	Connection Type	Orifice Size Inches (mm)	Rated C_V*	Pressure Rating psi (bar) @Room Temperature**
1/4	NPT	0.203 (5.16)	0.63	15,000 (1034)
3/8	NPT	0.219 (5.56)	0.75	15,000 (1034)
1/2	NPT	0.312 (7.92)	1.30	15,000 (1034)
3/4	NPT	0.438 (11.13)	2.50	10,000 (689)
1	NPT	0.562 (14.27)	4.40	10,000 (689)

Notes
* Cv values shown are for 2-way straight valve pattern. For 2-way angle patterns, increase CV value 50%. (Based on water). Formula for converting Cv to volumetric flow can be found in Technical Information section.

** Maximum Allowable Working Pressures decrease as temperatures increase - see pressure/temperature rating guide in Technical Information section.

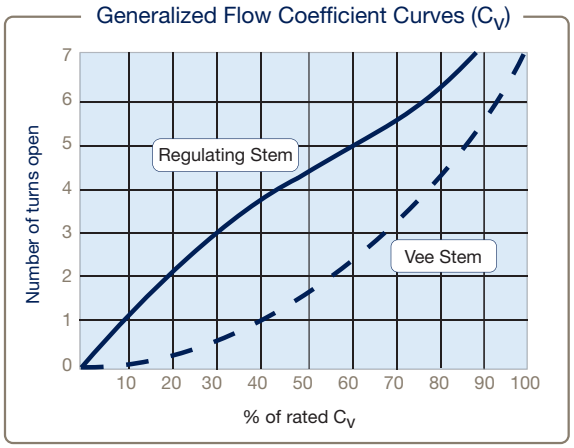

P Series Flow Curves for Vee and Regulating Style Stems

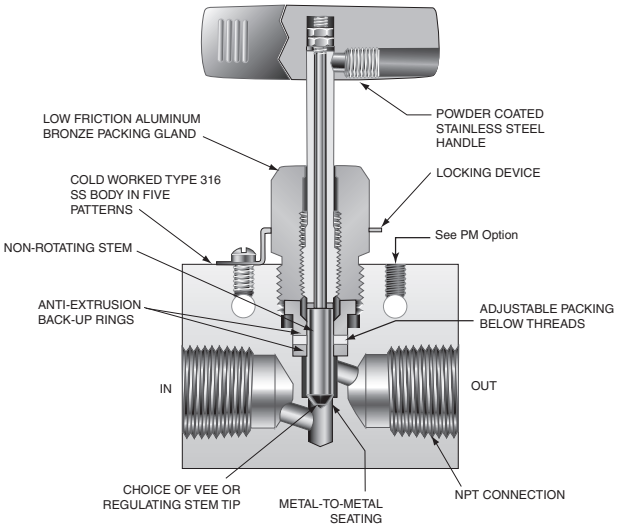

Valve Packing Options:

Standard Parker Autoclave Engineers valves with PTFE packing may be operated from 0°F (-18°C) to 450°F (232°C). High and Cryogenic temperature packing and /or extended stuffing box are available for service from -423°F (-252°C) to 800°F (427°C) by adding the following suffixes to catalog order number:

- **B** Cryogenic trim materials and PTFE packing required when below 0°F (-18°C) to -100°F (-73°C)
- **LT** Extended stuffing box valve with PTFE packing and Cryogenic trim materials to -423°F (-252°C)
- **TG** Standard valve with PTFE-Glass packing -100°F (-73°C) to 600°F (316°C) (See also -B option above when below 0°F (-18°C)
- **GY** Standard valve with Graphite Braided Yarn packing 32°F (0°C) to 800°F (427°C).

† Parker Autoclave Engineers recommends pipe connections be operated between -423°F (-252°C) and 400°F (204°C) (Temperature limit of PTFE sealant tape). For additional valve options, contact your Sales Representative.

(See "Technical Brochure" for Pressure/Temperature effect on temperatures above ambient.)

Tel: +45 63 12 83 00 | Email: ps@hymatik.com | www.hymatik.com | Hvidkaervej 27a, DK-5250 Odense SV, Denmark

Ordering Guide:

For complete information on available stem types, optional connections and additional valve options, see Needle Valve Options section or contact your Sales Representative.

Building a Part Number: ***Example: 15P4071***

Example Part Number:	15P	4	07	1	XX
Ordering Parameters/Options:	Valve Series	Outside Diameter Tube Size	Stem/Seat Type	Body Pattern	Options
Table Reference: (see below)	A	B	C	D	E

A - Valve Series	
10P	10,000 psi P Series (Pipe Valve) Needle Valve (use with 3/4" and 1")
15P	15,000 psi P Series (Pipe Valve) Needle Valve

B - Pipe Connection Size	
4	1/4" Female NPT
6	3/8" Female NPT
8	1/2" Female NPT
12	3/4" Female NPT
16	1" Female NPT

C - Stem/Seal Type (see page 8 for optional stem type description)	
07	Non-Rotating Vee Stem (on-off service)
08	Non-Rotating Regulating Stem (tapered tip for regulating and shutoff)

Notes: Valve Manuals can be found on our website at **www.Autoclave.com**. Connection, Running and Seating Torques can be found in the product manual or in our Tools and Installation Catalog Section. Valves that have not been cycled for a substantial period of time may require higher initial actuation torque.

(See "Technical Brochure" for Pressure/Temperature effect on temperatures above ambient.)

D - Body Pattern	
1	Two-Way Straight
2	Two-Way Angle
3	Three-Way, Two on Pressure
4	Three-Way, One on Pressure
5	Three-Way, Two Stem Manifold Valve

E - Options (select as many as necessary)	
For additional valve options see pages 8 & 9	
PM	Panel Mount, additional screw is supplied
B	Low temperature service below 0°F (-18°C) (included in LT code)
LT	Extended packing option with PTFE packing & cryogenic materials
TG	PTFE Glass (25%) Packing (to 600°F)
GY	High Temperature Graphite Yarn Packing to 800°F
*SOG	NACE Material, Hardness Verification/Certificate
***2507	UNS 32750 2507 Super Duplex Wetted Materials
***IN625	UNS N06625 Inconel 625 Wetted Materials

Pneumatic and Electric Actuator Options - see individual brochures for Suffix Codes
Other materials available on request See Techncial Brochure for common options and MAWP ratings

Notes: 316 SS valve bodies are cold worked and not suitable for use in NACE (ISO 15156) applications. If required, contact factory for options.

* SOG suffix also changes CW 316 SS Body material to Annealed 316 SS suitable for NACE service, Pressure reduction to 10,000 psi is typical.

*** Special Materials often have reduced MAWP ratings, see Technical brochure for assistance and for additional material options

Basic Repair Kits for 316 SS Material:

Stem Type		Basic Repair Kit for 316 SS Material				
		Pipe Size:				
		1/4"	3/8"	1/2"	3/4"	1"
2 Way Straight 2 Way Angle 3 Way, Two On 3 Way, One On	VEE REG	R15P407 R15P408	R15P607 R15P608	R15P807 R15P808	R10P1207 R10P1208	R10P1607 R10P1608
3 Way, 2 Stem Manifold	VEE REG	R15P4075 R15P4085	R15P6075 R15P6085	R15P8075 R15P8085	R10P12075 R10P12085	R10P16075 R10P16085

When ordering for valves bought with additional suffix options, please include those exact suffix codes when ordering repair kit. (Example: the stem for a manual valve and pneumatically actuated valve are different and the repair kit must include the exact actuator suffix codes).
Valve Manuals can be found on our website at **www.Autoclave.com**.
Running and Seating Torques can be found in the product manual or in our Tools and Installation Catalog Section

Material of Construction:

Item #	Description	Material
1	Hex Nut	300 Series SS
2	Thrust Washer	17-4 PH
3	Stem Sleeve	304 SS
4	Vee Stem (1/2" 15P shown)	316 SS
5	Packing Gland	AMPCO 18
6	Thrust Washer	17-4 PH
7	Packing Washer	PTFE
8	Bottom Washer	316 SS
9	Handle Assembly	316 SS
10	Locking Device	302 SS
11	Fill HD Screw, #10-24	18-8 SS
12	Stem Collar, (not used in 1/4" and 3/8" series)	PTFE
13	Packing Washer	AMPCO 18
14	Valve Body, (1/2" 15P shown)	316 SS

Typical spare parts found in Repair Kits

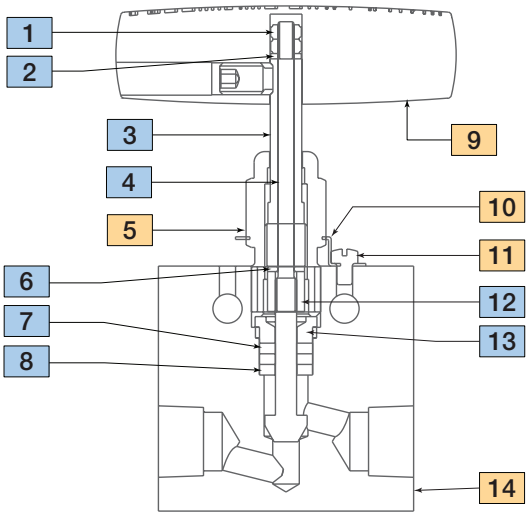

Panel Hole Size:

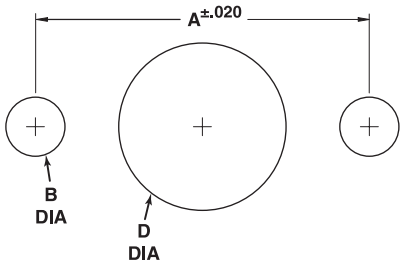

Needle Valve Panel Mount

	Inches			
Valve Size	**A**	**B**	**Screw Size**	**D**
1/4" & 3/8"	1.25	.22	10 - 24	.75
1/2"	1.375	.22	10 - 24	1.00
3/4"	1.75	.22	10 - 24	1.12
1"	2.50	.22	10 - 24	1.62
Use suffix **-PM** for extra mounting hardware				

Tel: +45 63 12 83 00 | Email: ps@hymatik.com | www.hymatik.com | Hvidkaervej 27a, DK-5250 Odense SV, Denmark

P Series Needle Valve Dimensions:

2 Way Straight

Stem Type	VEE REG	15P4071 15P4081	15P6071 15P6081	15P8071 15P8081	10P12071 10P12081	10P16071 10P16081
Pipe Size		**1/4 (6.35)**	**3/8 (9.53)**	**1/2 (12.70)**	**3/4 (19.05)**	**1 (25.40)**
Orifice Diameter		0.203 (5.16	0.219 (5.56)	0.312 (7.92)	0.437 (11.10)	0.562 (14.27)
Dimensions: inches (mm)	**A**	2.00 (50.80)	2.50 (63.50)	3.00 (76.20)	3.50 (88.90)	4.12 (104.65)
	B	1.00 (25.40)	1.25 (31.75)	1.50 (38.10)	1.75 (44.45)	2.06 (52.32)
	C	-	-	-	-	-
	D	1.41 (35.81)	1.41 (35.81)	2.06 (52.32)	2.63 (66.80)	3.31 (84.07)
	D1	-	-	-	-	-
	E	2.00 (50.80)	2.00 (50.80)	2.88 (73.15)	3.75 (95.25)	4.62 (117.35)
	F	3.00 (76.20)	3.00 (76.20)	4.00 (101.60)	10.25 (260.35)	10.25 (260.35)
	G	0.75 (19.05)	0.75 (19.05)	1.00 (25.40)	1.12 (28.45)	1.62 (41.15)
	G1	0.22 (5.59)	0.22 (5.59)	0.34 (8.64)	0.44 (11.18)	0.56 (14.22)
	H	4.63 (117.60)	4.63 (117.60)	5.93 (150.62)	7.00 (177.80)	9.00 (228.60)
	M	0.62 (15.75)	0.62 (15.75)	0.69 (17.53)	0.88 (22.35)	1.25 (31.75)
Bar Handle used on 3/4" and 1" Valves	**N**	0.38 (9.65)	0.38 (9.65)	0.50 (12.70)	0.63 (16.00)	1.13 (28.70)
Block Thickness		0.75 (19.05)	1.00 (25.4)	1.38 (35.05)	1.75 (44.45)	1.75 (44.45)

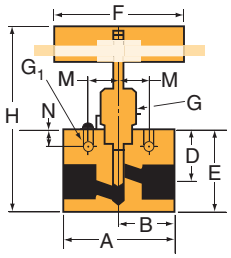

2 Way Angle

Stem Type	VEE REG	15P4072 15P4082	15P6072 15P6082	15P8072 15P8082	10P12072 10P12082	10P16072 10P16082
Pipe Size		**1/4 (6.35)**	**3/8 (9.53)**	**1/2 (12.70)**	**3/4 (19.05)**	**1 (25.40)**
Orifice Diameter		0.203 (5.16)	0.219 (5.56)	0.312 (7.92)	0.437 (11.10)	0.562 (14.27)
Dimensions: inches (mm)	**A**	2.00 (50.80)	2.50 (63.50)	3.00 (76.20)	3.50 (88.90)	4.12 (104.65)
	B	1.00 (25.40)	1.25 (31.75)	1.50 (38.10)	1.75 (44.45)	2.06 (52.32)
	C	-	-	-	-	-
	D	1.41 (35.81)	1.41 (35.81)	2.06 (52.32)	2.63 (66.80)	3.31 (84.07)
	D1	-	-	-	-	-
	E	2.44 (61.98)	2.44 (61.98)	3.38 (85.85)	4.25 (107.95)	5.12 (130.05)
	F	3.00 (76.20)	3.00 (76.20)	4.00 (101.60)	10.25 (260.35)	10.25 (260.35)
	G	0.75 (19.05)	0.75 (19.05)	1.00 (25.40)	1.12 (28.45)	1.62 (41.15)
	G1	0.22 (5.59)	0.22 (5.59)	0.34 (8.64)	0.44 (11.18)	0.56 (14.22)
	H	4.81 (122.17)	4.81 (122.17)	6.43 (163.32)	7.50 (190.50)	9.00 (228.60)
	M	0.62 (15.75)	0.62 (15.75)	0.69 (17.53)	0.88 (22.35)	1.25 (31.75)
Bar Handle used on 3/4" and 1" Valves	**N**	0.38 (9.65)	0.38 (9.65)	0.50 (12.70)	0.63 (16.00)	1.13 (28.70)
Block Thickness		0.75 (19.05)	1.00 (25.4)	1.38 (35.05)	1.75 (44.45)	1.75 (44.45)

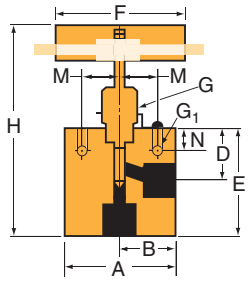

G - Packing Gland mounting hole drill size • G1 - Bracket mounting hole size • H* - Dimension is with stem in closed position
All dimensions for reference only and subject to change • For prompt service, Parker Autoclave stocks select products. Consult factory.

P Series Needle Valve Dimensions:

3 Way, 2 on Pressure

Stem Type	VEE REG	15P4073 15P4083	15P6073 15P6083	15P8073 15P8083	10P12073 10P12083	10P16073 10P16083
Pipe Size		**1/4 (6.35)**	**3/8 (9.53)**	**1/2 (12.70)**	**3/4 (19.05)**	**1 (25.40)**
Orifice Diameter		0.203 (5.16)	0.219 (5.56)	0.312 (7.92)	0.437 (11.10)	0.562 (14.27)
Dimensions: inches (mm)	**A**	2.00 (50.80)	2.50 (63.50)	3.00 (76.20)	3.50 (88.90)	4.12 (104.65)
	B	1.00 (25.40)	1.25 (31.75)	1.50 (38.10)	1.75 (44.45)	2.06 (52.32)
	C	-	-	-	-	-
	D	1.41 (35.81)	1.41 (35.81)	2.06 (52.32)	2.65 (67.31)	3.31 (84.07)
	D1	-	-	-	-	-
	E	2.62 (66.55)	2.62 (66.55)	3.62 (91.95)	4.62 (117.35)	5.88 (149.35)
	F	3.00 (76.20)	3.00 (76.20)	4.00 (101.60)	10.25 (260.35)	10.25 (260.35)
	G	0.75 (19.05)	0.75 (19.05)	1.00 (25.40)	1.12 (28.45)	1.62 (41.15)
	G1	0.22 (5.59)	0.22 (5.59)	0.34 (8.64)	0.44 (11.18)	0.56 (14.22)
	H*	5.00 (127.00)	5.00 (127.00)	6.52 (165.61)	7.88 (200.15)	9.75 (247.65)
	M	0.62 (15.75)	0.62 (15.75)	0.69 (17.53)	0.88 (22.35)	1.25 (31.75)
	N	0.38 (9.65)	0.38 (9.65)	0.50 (12.70)	0.63 (16.00)	1.13 (28.70)
Block Thickness		0.75 (19.05)	1.00 (25.4)	1.38 (35.05)	1.75 (44.45)	1.75 (44.45)

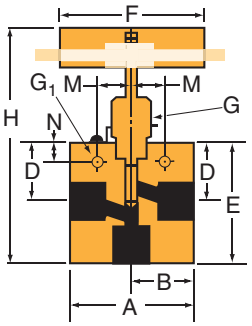

Bar Handle used on 3/4" and 1" Valves

3 Way, 1 on Pressure

Stem Type	VEE REG	15P4074 15P4084	15P6074 15P6084	15P8074 15P8084	10P12074 10P12084	10P16074 10P16084
Pipe Size		**1/4 (6.35)**	**3/8 (9.53)**	**1/2 (12.70)**	**3/4 (19.05)**	**1 (25.40)**
Orifice Diameter		0.203 (5.16)	0.219 (5.56)	0.312 (7.92)	0.437 (11.10)	0.562 (14.27)
Dimensions: inches (mm)	**A**	2.00 (50.80)	2.50 (63.50)	3.00 (76.20)	3.50 (88.90)	4.12 (104.65)
	B	1.00 (25.40)	1.25 (31.75)	1.50 (38.10)	1.75 (44.45)	2.06 (52.32)
	C	-	-	-	-	-
	D	1.41 (35.81)	1.41 (35.81)	2.06 (52.32)	2.65 (67.31)	3.31 (84.07)
	D1	-	-	-	-	-
	E	2.44 (61.98)	2.44 (61.98)	3.38 (85.85)	4.25 (107.95)	5.12 (130.05)
	F	3.00 (76.20)	3.00 (76.20)	4.00 (101.60)	10.25 (260.35)	10.25 (260.35)
	G	0.75 (19.05)	0.75 (19.05)	1.00 (25.40)	1.12 (28.45)	1.62 (41.15)
	G1	0.22 (5.59)	0.22 (5.59)	0.34 (8.64)	0.44 (11.18)	0.56 (14.22)
	H	4.81 (122.17)	4.81 (122.17)	6.31 (160.27)	7.50 (190.50)	9.09 (230.89)
	M	0.62 (15.75)	0.62 (15.75)	0.69 (17.53)	0.88 (22.35)	1.25 (31.75)
	N	0.38 (9.65)	0.38 (9.65)	0.50 (12.70)	0.63 (16.00)	1.13 (28.70)
Block Thickness		0.75 (19.05)	1.00 (25.4)	1.38 (35.05)	1.75 (44.45)	1.75 (44.45)

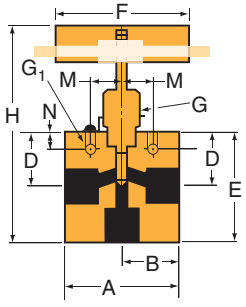

Bar Handle used on 3/4" and 1" Valves

G - Packing Gland mounting hole drill size • G1 - Bracket mounting hole size • H* - Dimension is with stem in closed position
All dimensions for reference only and subject to change • For prompt service, Parker Autoclave stocks select products. Consult factory.

Tel: +45 63 12 83 00 | Email: ps@hymatik.com | www.hymatik.com | Hvidkaervej 27a, DK-5250 Odense SV, Denmark

P Series Needle Valve Dimensions:

3 Way, 2 Stem Manifold

Stem Type	VEE REG	15P4075 15P4085	15P6075 15P6085	15P8075 15P8085	10P12075 10P12085	10P16075 10P16085
Pipe Size		**1/4 (6.35)**	**3/8 (9.53)**	**1/2 (12.70)**	**3/4 (19.05)**	**1 (25.40)**
Orifice Diameter		0.203 (5.16)	0.219 (5.56)	0.312 (7.92)	0.437 (11.10)	0.562 (14.27)
Dimensions: inches (mm)	**A**	2.00 (50.80)	2.50 (63.50)	3.00 (76.20)	3.50 (88.90)	4.12 (104.65)
	B	1.00 (25.40)	1.25 (31.75)	1.50 (38.10)	1.75 (44.45)	2.06 (52.32)
	C	-	-	-	-	-
	D	1.69 (42.88)	1.69 (42.88)	2.56 (66.07)	3.25 (82.55)	3.75 (96.25)
	D1	1.19 (30.18)	1.19 (30.18)	1.75 (44.45)	2.25 (57.15	2.81 (71.42)
	E	3.38 (85.85)	3.38 (85.85)	5.12 (130.05)	6.50 (165.10)	7.50 (190.50)
	F	3.00 (76.20)	3.00 (76.20)	4.00 (101.60)	10.25 (260.35)	10.25 (260.35)
	G	0.75 (19.05)	0.75 (19.05)	1.00 (25.40)	1.12 (28.45)	1.62 (41.15)
	G1	0.22 (5.59)	0.22 (5.59)	0.34 (8.64)	0.44 (11.18)	0.56 (14.22)
	H	5.75 (146.05)	5.75 (146.05)	8.05 (204.47)	9.75 (247.65)	11.47 (291.38)
	M	0.62 (15.75)	0.62 (15.75)	0.69 (17.53)	0.88 (22.35)	1.25 (31.75)
	N	0.38 (9.65)	0.38 (9.65)	0.50 (12.70)	0.63 (16.00)	1.13 (28.70)
Block Thickness		0.75 (19.05)	1.00 (25.4)	1.38 (35.05)	1.75 (44.45)	1.75 (44.45)

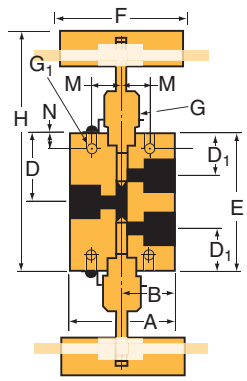

Bar Handle used on 3/4" and 1" Valves

G - Packing Gland mounting hole drill size • G1 - Bracket mounting hole size • H* - Dimension is with stem in closed position
All dimensions for reference only and subject to change • For prompt service, Parker Autoclave stocks select products. Consult factory.

Valve Options: (For Actuator Options please reference specific Actuator brochure)



Pneumatic Valve Actuators:

The need to control process and vent valves from a remote location makes air operated valves a vital component to many processing operations. All Parker Autoclave Engineers' valves are available with piston type actuators. Five sizes of air actuators (light, mini-light, medium, heavy duty or extra heavy, single and double stage) are offered to meet the service requirements of Parker Autoclave Engineers' Low, Medium and High Pressure needle valves. Both air-to-open (normally closed) and air-to-close (normally open) designs are included in the product line. Optional air to open AND close actuators available upon request. Please see our Pneumatic Valve Actuator Brochure to help size the proper actuator for your application.



Electric Valve Actuators:

Remotely controlling process flow at high pressure enhances safety and lowers labor costs. Parker Autoclave Engineers developed a flow control valve available in several models including weatherproof and explosionproof options.

The Electrically Actuated Shut-off/Flow Regulating Actuator (FRC Series) is available for most of our Needle Valves through 1/2" pipe connection sizes and up to 15,000 psi maximum pressure. They can withstand wide process temperature ranges.

Stem Options:

Most Parker Autoclave Engineers' valves are available with either Vee (on-off) or Regulating (Flow Control) Stems in our standard valve body as shown below. For severe service stem (and replaceable seat if ordered) can be offered with N-Dura Diamond-Like coating (**-CS** suffix or **-CSS** (coated stem & seat)) or made from Stellite (**-SS** or **-SSRS** (Stellite stem, replaceable seat)).

VEE Stem

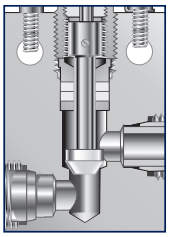

The Vee stem is used for direct on-off, metal-to-metal shut-off with quick-opening flow characteristics.

Regulating Stem

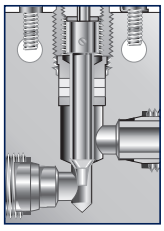

In some applications, more precise flow control is required than is possible with a Vee stem. For these cases, Autoclave offers a non-rotating, two-piece regulating stem which can be used for both control and shut-off. While it is not as precise as the control associated with the MicroMetering stem, especially with smaller flows, it does offer substantially better control than the Vee stem.

Tel: +45 63 12 83 00 | Email: ps@hymatik.com | www.hymatik.com | Hvidkaervej 27a, DK-5250 Odense SV, Denmark

Valve Options: (For Actuator Options please reference specific Actuator brochure)

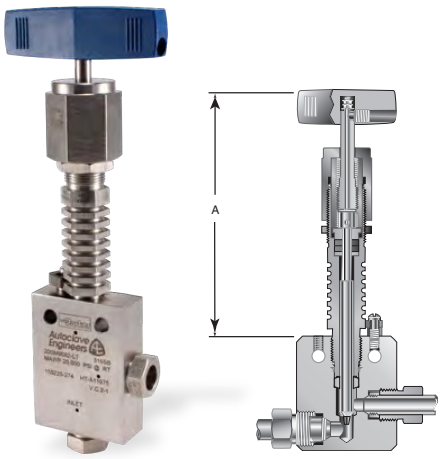

High/Low Temperature Extension:

Required with extreme temperatures to remove packing from contact with flow stream.

-LT Low Temperature (under -100°F (-73°C))

Valve Series	Outside Diameter Tube Size (inches)	Dimensions "A" inches (mm)
10P Series 15P Series	1/4"	5.50 (140)
	3/8"	6.00 (152)
	1/2"	6.60 (168)
	3/4"	7.75 (197)
	1"	9.30 (236)
LT option code includes 316 SS Trim material and PTFE packing		

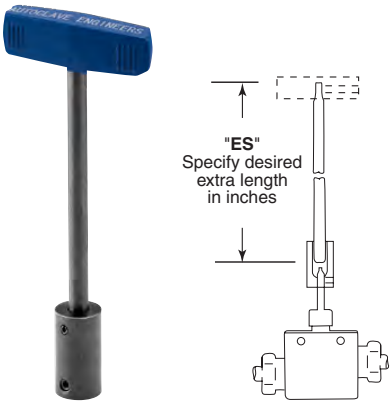

ES Stem Extender:

Stem extenders are offered for High and Low temperature operation or to extend through panel or barricade.

To order valve with Stem Extender, add "**ES-**" and length (6", 12", 18", 24") to beginning of valve part number e.g. ES12-15P6071. Other lengths to special order.

To order Stem Extender only, provide valve model prefix e.g. ES12-15P6. Handle not included – use same provided with original valve.



Needle Valve Clam Shell Handle Lockout:

(order separately using part numbers shown below, padlock not included)

Clam Shell Handle locks are provided to lockout valves in open or closed position preventing unauthorized personnel from actuating valve during shutdown or emergency situations. This clamshell design is available in four (4) sizes dependent on handle length:

P/N AE004855 – 1" to 2.5" handle length
P/N 90088 – 2.5" to 5.0" handle length
P/N 90194 – 6.5" to 10" handle length
P/N AE004350 – 8" to 13" handle length

Tel: +45 63 12 83 00 | Email: ps@hymatik.com | www.hymatik.com | Hvidkaervej 27a, DK-5250 Odense SV, Denmark

Needle Valve

VRMM MicroMetering Series
60,000 psi (4140 bar)

10VRMM, 15PVRMM (NPT), 30VRMM, 60VRMM Series



Principle of Operation:

MicroMetering valves are designed for applications where more precise control of small flow is required than is possible with a standard regulating stem. Barrel and Thimble micrometer design permits settings to be repeated.

Metering is controlled by a finely tapered stem acting in a precisely mated replaceable seat. Very fine stem position is achieved utilizing a 40 TPI thread. The Barrel and Thimble are calibrated for proper metering at the factory.

These valves are designed for metering only and cannot be used as a shutoff valve. Minimum flow is factory set and occurs at “0” position. DO NOT OPERATE THE VALVE BELOW THE ZERO POSITION OR DAMAGE WILL RESULT. When shutoff action is required, a pressure matching shutoff valve is recommended.

MicroMetering Valve Features:

- Barrel and Thimble design permits repeatable settings
- Barrel divisions every 0.025"
- 25 Thimble divisions, each representing 0.001" stem travel. One revolution = 0.025” stem travel.
- Operating Temperatures vary per model but can range from -100° to 800°F (-73° to 427°C)
- UNS S31600 cold worked type 316 stainless steel body. Stem and seat are cold-worked type 316 stainless steel.
- Packing below stem threads is PTFE for the 10VRMM, 15PVRMM and 30VRMM valves and nylon-leather for the 60VRMM. For packing options, see Technical Information Section.
- Speedbite “W” Series compression sleeve connections are used on the 10VRMM Series. Operating temperatures are limited from -100° to 650°F
- 1/4" NPT connections (ANPT Aerospace version) are used on 15PVRMM Series. Operating temperatures are limited from -100°F to 400°F
- Parker AE High Pressure Cone & Thread connections are used on both the 30VRMM and 60VRMM Series
- Electric Flow Control Actuators are available for all VRMM Style Valves. See Actuator Section of Catalog for suffix code options.

Parker Autoclave Engineers valves are complemented by a complete line of fittings, tubing, check valves and line filters. Traceability is ensured by use of heat a purchase order codes etched on valve body that also include model number, MAWP rating, and Material Type references. All valves include connection sleeve/collar and gland nut as appropriate.

All Parker Autoclave Engineers products are designed in accordance with ASME B31.3 Chapter IX High Pressure Piping standards.

ENGINEERING YOUR SUCCESS.

MicroMetering Series: Pressures to 60,000 psi (4137bar)



15PVRMM "NPT" version shown above

Valve Series	Tube Outside Diameter Size (inches)	Connection Type	Orifice Size Inches (mm)	Rated C_V*	Pressure Rating psi (bar) @Room Temperature**
10VRMM	1/8	W125	0.062 (1.57)	.004	15,000 (1034)
15PVRMM	1/4	NPT	0.062 (1.57)	.004	15,000 (1034)
30VRMM	1/4	F250C	0.062 (1.57)	.004	30,000 (2069)
60VRMM	1/4	F250C	0.062 (1.57)	.004	60,000 (4137)
60VRMM	3/8	F375C	0.062 (1.57)	.004	60,000 (4137)

Notes

** For complete temperature ratings see pressure/temperature rating guide in Technical Information section.

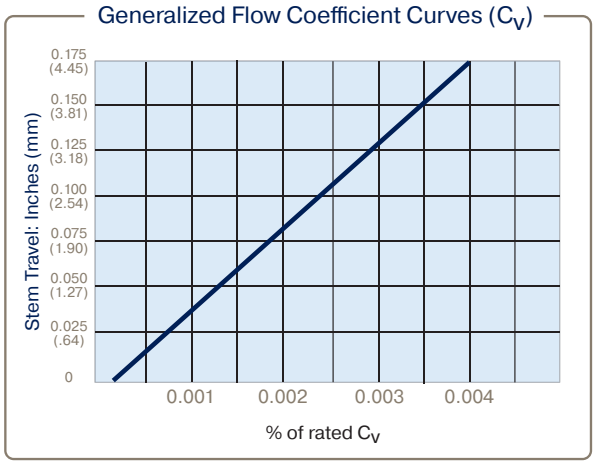

MicroMetering (VRMM) Series Flow Curve

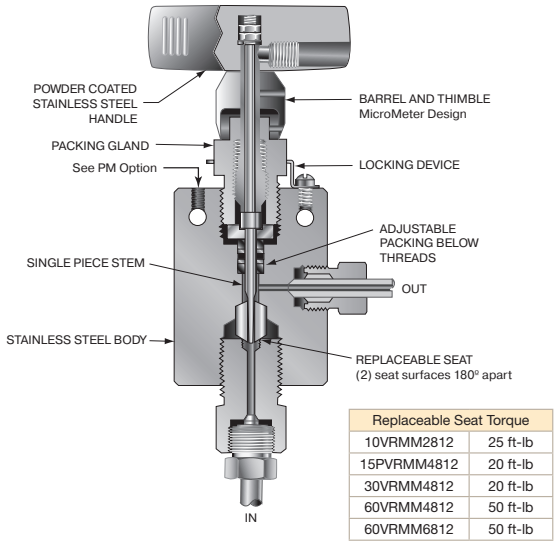

Replaceable Seat Torque	
10VRMM2812	25 ft-lb
15PVRMM4812	20 ft-lb
30VRMM4812	20 ft-lb
60VRMM4812	50 ft-lb
60VRMM6812	50 ft-lb

To ensure proper fit use Parker Autoclave tubing
NPT valve option will not have connection collar and gland nut as shown above.

Valve Packing Options:

Standard Parker Autoclave Engineers 10VRMM, 15PVRMM and 30VRMM Series valves with PTFE packing may be operated to 450°F (232°C). 60VRMM series valves with nylon/leather/nylon packing may be operated from 40ºF (4ºC) to 230ºF (110ºC).

***TG** Standard valve with PTFE glass packing -100° to 600°F (-73° to 316°).

GY Standard valve with graphite braided yarn packing to 32° to 800°F (0° to 427°).

B Cryogenic trim materials and PTFE packing required when below 0°F (-18°C) to -100°F (-73°C).

Note: *60VRMM valves with -TG option supplied with PEEK/PTFE Glass/PEEK packing

Parker Autoclave Engineers does not recommend Low Pressure Speedbite sleeve connections below -100°F (-73°C) or above 650°F (343°C). NPT Pipe Connections can be used from -100° to over 400°F (-72 to 204°C) (dependent on sealant temperature range). See needle valve options for stem and seat coating for erosive service.

Tel: +45 63 12 83 00 | Email: ps@hymatik.com | www.hymatik.com | Hvidkaervej 27a, DK-5250 Odense SV, Denmark

Ordering Guide:

For complete information on available stem types, optional connections and additional valve options, see Needle Valve Options section or contact your Sales Representative. VRMM Series valves are furnished complete with connection components, unless otherwise specified.

Building a Part Number: *Example: 60VRMM4812*

Example Part Number:	60VRMM	4	81	2	XX
Ordering Parameters/Options:	Valve Series	Outside Diameter Tube Size	Stem/Seat Type	Body Pattern	Options
Table Reference: (see below)	A	B	C	D	E

A - Valve Series	
10VRMM	MicroMetering Valve (Compression Sleeve connection)
15PVRMM	MicroMetering Valve (NPT connection)
30VRMM	MicroMetering Valve, High Pressure Cone & Thread
60VRMM	MicroMetering Valve, High Pressure Cone & Thread

B - Outside Diameter Tube/Pipe Size	
2	1/8" (10VRMM only available)
4	1/4" (15PVRMM & 30VRMM only available)
6	3/8"

C - Stem/Seal Type	
81	Rotating MicroMetering one piece stem with Replaceable Seat

D - Body Pattern	
2	Two-Way Angle

E - Options	
For extreme temperatures and other options, see Valve Options.	
PM	Panel Mount, additional #10-24 screw is supplied
CSS	N-Dura Coated Stem and Seat
B	Cryogenic Trim material change required when below 0°F
TG	PTFE Glass (25%) Packing to 600°F
GY	Graphite Yarn Packing for Temperatures to 800°F

Material of Construction:

Item #	Description	Material
1	Handle, 3 inches	316 SS
2	Set Screw, #8-35 x .25 LG	Steel
3	Thimble	303 SS
4	Packing Gland	AMPCO 45
5*	Packing	Nylon
6*	Packing	Leather
7	Packing Washer	316 SS
8	Stem	316 SS
9	Barrel	303 SS
10	Set Screw, #8-35 x .125 LG	Steel
11	Locking Device	302 SS
12	Screw, Fillister Head #10	18-8 SS
13	Backup Washer	17-4 PH
14	Replaceable Seat	17-4 PH
15	Valve Body	316 SS
16	Seat Retainer	316 SS

	Typical spare parts found in Repair Kits
*	10VRMM, 15PVRMM, and 30VRMM have a single PTFE packing ring

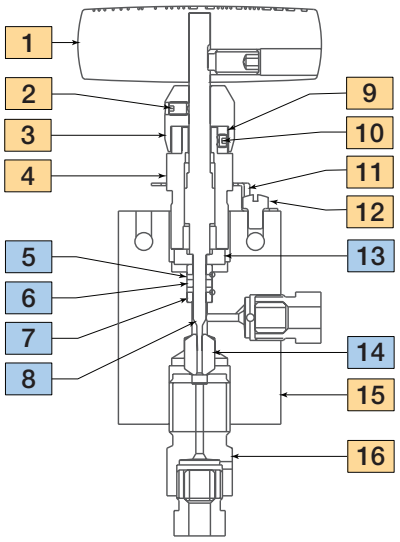

Basic Repair Kits for 316 SS Material:

		Basic Repair Kit for 316 SS Material			
Stem Type		10VRMM	15PVRMM	30VRMM	60VRMM
2 Way Angle Vee Stem	VEE	R10VRMM2812	R15PVRMM	R30VRMM4812	R60VRMM (both sizes)

Consult your Parker Autoclave Engineers representative for other kit numbers, body part numbers, and pricing.
Visit www.autoclave.com for product Operation manuals.

Tel: +45 63 12 83 00 | Email: ps@hymatik.com | www.hymatik.com | Hvidkaervej 27a, DK-5250 Odense SV, Denmark

VRMM Series Dimensions:

2 Way Angle - 10VRMM		
		Catalog Number
Stem Type	VEE	10VRMM2812
Outside Diameter Tube		**1/8 (3.17)**
Orifice Diameter		0.062 (1.57)
Dimensions: inches (mm)	**A**	1.50 (38)
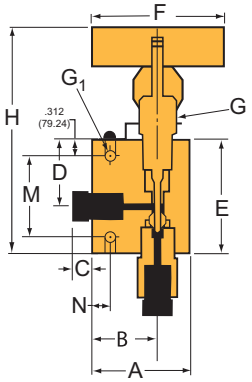	**B**	0.88 (22)
	C	0.31 (8)
	D	0.94 (24)
	E	1.56 (40)
	F	3.00 (76)
	G	0.75 (19)
	G1	0.16 (40)
	H*	5.06 (129)
	M	1.00 (25)
	N	0.25 (6)
Block Thickness		0.75 (19)

2 Way Angle - 30 & 60VRMM				
		Catalog Number		
Stem Type	VEE	30VRMM4812	60VRMM4812	60VRMM6812
Outside Diameter Tube		**1/4 (6.35)**	**1/4 (6.35)**	**3/8 (9.53)**
Orifice Diameter		0.062 (1.57)	0.062 (1.57)	0.062 (1.57)
Dimensions: inches (mm)	**A**	2.00 (50.80)	2.00 (50.80)	2.00 (50.80)
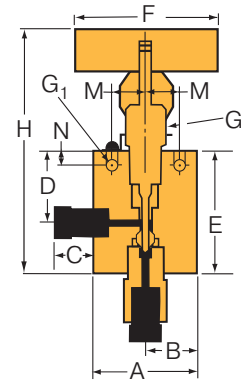	**B**	1.00 (25.40)	1.00 (25.40)	1.00 (25.40)
	C	0.50 (12.70)	0.50 (12.70)	0.53 (13.46)
	D	1.12 (28.44)	1.31 (33.27)	1.31 (33.27)
	E	2.00 (50.80)	2.63 (66.80)	2.63 (66.80)
	F	3.00 (76.20)	3.00 (76.20)	3.00 (76.20)
	G	1.00 (25)	1.00 (25))	1.00 (25)
	G1	0.22 (5.58)	0.22 (5.58)	0.22 (5.58)
	H*	5.06 (128.52)	6.06 (153.92)	6.06 (153.92)
	M	0.69 (17.25)	0.69 (17.25)	0.69 (17.25)
	N	0.50 (12.70)	0.38 (9.65)	0.38 (9.65)
Block Thickness		1.00 (25.40)	1.00 (25.40)	1.00 (25.40)

G - Packing Gland mounting hole drill size • G1 - Bracket mounting hole size • H* - Dimension is with stem in closed position
All dimensions for reference only and subject to change • For prompt service, Parker Autoclave stocks select products. Consult factory.

Tel: +45 63 12 83 00 | Email: ps@hymatik.com | www.hymatik.com | Hvidkaervej 27a, DK-5250 Odense SV, Denmark

VRMM Series Dimensions:

2 Way Angle - 15PVRMM (NPT)			
			Catalog Number
Stem Type	VEE		15PVRMM4812
Outside Diameter Tube			1/4 (6.35)
Orifice Diameter			0.062 (1.57)
Dimensions: inches (mm)		A	2.00 (51)
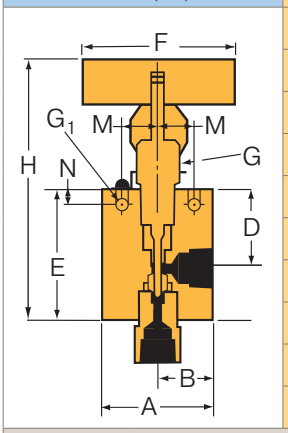		B	1.00 (25)
		C	-
		D	1.25 (32)
		E	2.16 (53)
		F	3.00 (76)
		G	1.00 (25)
		G1	0.22 (6)
		H*	5.25 (132)
		M	0.69 (17)
		N	0.5 (13)
Block Thickness			1.00 (25)

Notes

NPT Pipe Thread Connections:

NPT threads must be sealed using a high quality PTFE tape (3 wraps minimum) and/or thread sealant paste product suitable for process temperature.

Refer to thread sealant manufacturer's instructions for application instructions. A good thread lubrication product (metal flake style) capable of process temperatures is also necessary to prevent thread galling.

Sealing performance may vary based on many factors such as pressure, temperature, media, thread quality, thread material, proper engagement, and proper use of thread sealant.

End user should limit the number of times an NPT fitting is assembled and disassembled as thread deformation during assembly will result in deteriorating seal quality over time.

Panel Hole Sizes:

Valve Size	Inches			
	A	B	Screw Size	G
10VRMM	.63 *	.22	#10-24	0.75
15PVRMM	1.38	.22	#10-24	1.0
30VRMM	1.38	.22	#10-24	1.0
60VRMM (both sizes)	1.38	.22	#10-24	1.0

*10VRMM Valve has only one mounting screw. Dimension shown is from stem center to panel hole center. 10VRMM Thimble must be removed to mount on panel.

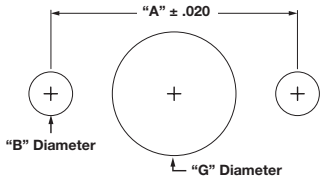

Needle Valve Panel Mount

Tel: +45 63 12 83 00 | Email: ps@hymatik.com | www.hymatik.com | Hvidkaervej 27a, DK-5250 Odense SV, Denmark

Valve Options: (For Actuator Options please reference specific Actuator brochure)



Electric Valve Actuators:

Parker Autoclave Engineers has developed an electric actuator capable of fine, multi-turn, control.

This actuator is designed specifically for our VRMM Series valves to facilitate remote control of these high pressure low flow metering valves. 4-20mA (-C4 suffix) or 0-10VDC (-C10 suffix) control signal options are available.

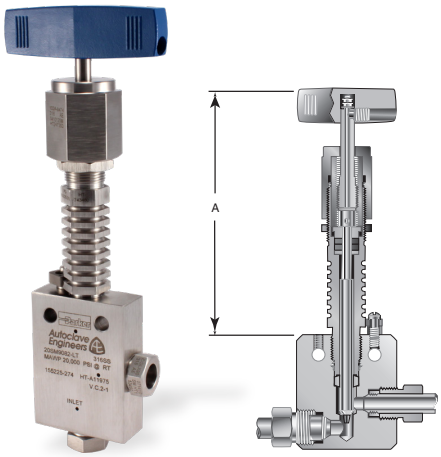

High Temperature Extension:

Required for extreme temperatures

-HT High Temperature (over 600°F to 800°F maximum)

Valve Series	Outside Diameter Tube Size (inches)	Dimensions "A" inches (mm)
10VRMM 15PVRMM 30VRMM 60VRMM	1/8"	5.38 (137)
	1/4"	6.00 (152)
	3/8"	6.00 (152
HT option code includes Graphite (-GY) packing		



Needle Valve Clam Shell Handle Lockout:

(order separately using part numbers shown below, padlock not included)

Clam Shell Handle locks are provided to lockout valves in open or closed position preventing unauthorized personnel from actuating valve during shutdown or emergency situations. This clamshell design is available in four (4) sizes dependent on handle length:

P/N AE004855 – 1" to 2.5" handle length
P/N 90088 – 2.5" to 5.0" handle length
P/N 90194 – 6.5" to 10" handle length
P/N AE004350 – 8" to 13" handle length

Tel: +45 63 12 83 00 | Email: ps@hymatik.com | www.hymatik.com | Hvidkaervej 27a, DK-5250 Odense SV, Denmark

Needle Valve

Manifold Block and Bleed

MVBB, 20DBNV, Wellhead Gauge & Bleed/Vent Valves

Pressure to 30,000 psi (2070 bar)

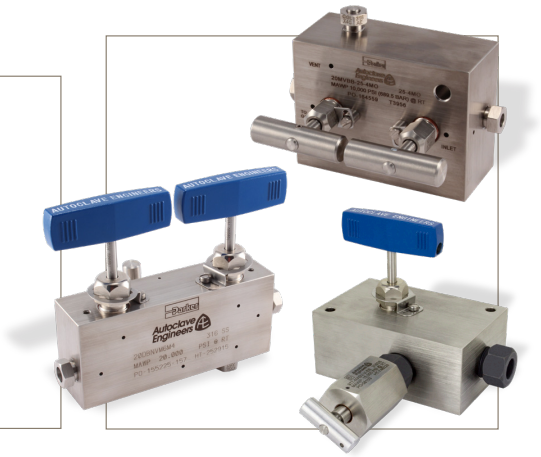

Principle of Operation:

Parker Autoclave Engineers Manifold Valves are available in compact Single and Double Block & Bleed manifold designs using Cone & Thread style and NPT connections. Designed for a maximum of 30,000 psi MAWP using high tensile strength UNS S31600 cold worked 316 Stainless Steel material as standard.

MVBB Single Block & Bleed Manifold Valve Features:

- MVBB Series valve design provides large valve performance in a small package
- Tubing sizes: 1/4" and 3/8" Pipe Size: 1/2" NPT
- Single Block & Bleed design

DBNV Double Block & Bleed Manifold Valve Features:

- Connection specific Non-Rotating Vee Stems matching material selection, (Rotating Stem Vent valve)
- Tubing Sizes from 1/4" to 3/4" Medium Pressure and 9/16" High Pressure (API Type III Connection)
- -423° to 1000°F (-252° to 540°C) Temperature Range

GV Series Wellhead Gauge Valve Features:

- One Inlet, 3 Outlet ports, standard using 9/16" HP (API Type III connection), other sizes available
- 30,000 psi MAWP capable, 20,000 psi MAWP NACE capable
- Use with BV Series Bleed Valve (below) in any outlet port to create Block and Bleed valve

BV Series Bleed/Vent Valve Features:

- 3/8" and 9/16" connections to match GV Series Gauge Valves above (API type III connection available)
- Vent port tapped (1/8" NPT) for plumbing to safe area
- Vent Valve can be rated to 30,000 psi in closed position, 15,000 psi in open position.

All Parker Autoclave Engineers products are designed in accordance with ASME B31.3 Chapter IX High Pressure Piping standards.

ENGINEERING YOUR SUCCESS.

MVBB Series: Pressures to 20,000 psi (1380 bar)

Single Block & Bleed Needle Type Manifold Valve

Principle of Operation:

Parker Autoclave Engineers series MVBB block and bleed needle valve is a two stem manifold valve providing an economical and convenient method of isolating and venting or pressurization when calibrating pressure transmitters and gauges.

The valve utilizes Parker Autoclave Engineers Mini Valve packing and stem design making it compact and easy to use. The valve can be surface or panel mounted for safe operation. Manifold style valves reduce the number of fittings and space required for installation.



MVBB Single Block & Bleed Manifold Valve Features:

- MVBB Series valve design provides large valve performance in a small package
- Tubing sizes: 1/4" and 3/8". Pipe size: 1/2" NPT
- UNS S31600, CW 316 Stainless Steel body construction as standard. Additional Material options including NACE approved (SOG) materials are available.
- Rising stem/barstock body design
- Metal-to-metal seating achieves bubble-tight shut-off, longer stem/seat life in abrasive flow, greater durability for repeated on/off cycles and excellent corrosion resistance
- PTFE Glass packing provides dependable stem and body sealing with temperatures from -100° to 650°F (-70° to 340°C)
- Stem and packing gland design have been selected to achieve extended thread cycle life and reduced handle torque

Traceability of the materials used is ensured by use of heat and purchase order codes etched on valve body that also includes model number, MAWP rating, and material type references. All MVBB valves include connection collar and gland nut unless requested otherwise. Parker Autoclave Engineers' valves are complemented by a complete line of Medium Pressure Cone & Thread fittings, tubing, check valves, relief valves, and line filters that provide a reliable bubble tight seal for dependable performance in gas or liquid service.

Tel: +45 63 12 83 00 | Email: ps@hymatik.com | www.hymatik.com | Hvidkaervej 27a, DK-5250 Odense SV, Denmark

Tube Outside Diameter Size (inches)	Connection Type	Orifice Size Inches (mm)	Rated C_V*	Pressure Rating psi (bar) @Room Temperature**
1/4	SF250CX (1/4" MP)	0.094 (2.4)	0.20	20,000 (1380)
3/8	SF375CX (3/8" MP)	0.094 (2.4)	0.20	20,000 (1380)
1/2	NPT	0.094 (2.4)	0.20	15,000 (1035)

Notes

** For complete temperature ratings see pressure/temperature rating guide in Technical Information section.

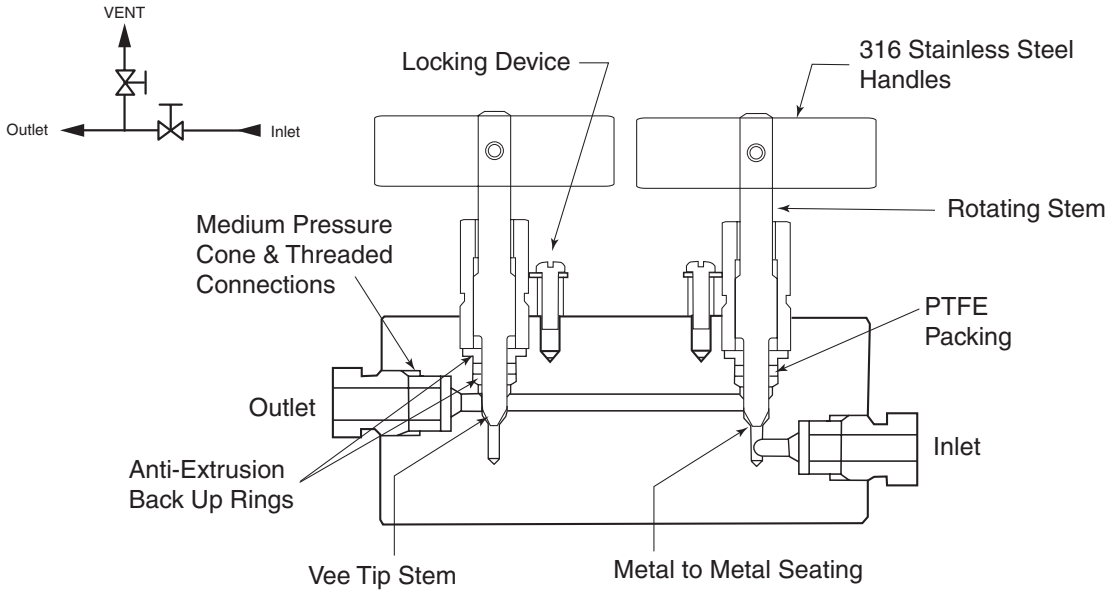

To ensure proper fit use Parker Autoclave tubing

Valve Packing Options:

Standard Parker Autoclave Engineers valves with PTFE packing may be operated to 450°F (232°C).
For additional temperatures, see options below and include suffix code in part number of valve selected:

TG Standard valve with PTFE-Glass packing -100° to 650°F (-70 to 340°C)

B Cryogenic trim materials and PTFE packing required when below 0°F to -100°F (-73°C)

Note: Refer to the Tools, Installation, Operation and Maintenance catalog for proper connection, packing, seating & running torques.

Tel: +45 63 12 83 00 | Email: ps@hymatik.com | www.hymatik.com | Hvidkaervej 27a, DK-5250 Odense SV, Denmark

Ordering Guide:

MVBB Series valves are furnished complete with connection components, unless otherwise specified. Valve options on page 15 do not apply for MVBB Manifold Valves.

Building a Part Number: *Example: 20MVBB6*

Example Part Number:	20MVBB	6	XX
Ordering Parameters/Options:	Valve Series	Outside Diameter Tube Size	Options
Table Reference: (see below)	A	B	C

A - Valve Series	
20MVBB	20,000 psi Mini MVBB Block & Bleed Valve
15MVBB	15,000 psi Mini MVBB Block & Bleed Valves

B - Tubing OD or Pipe Size	
#	1/4" MP (20MVBB option only)
6	3/8" MP (20MVBB option only)
P8	1/2" Pipe NPT only (only applicable for 15MVBB Valve Series)

E - Options (Multiple Options can be chosen)	
TG	PTFE Glass (25%) Packing (to 650°F)
B	Low Temperature service required below 0°F (-18°C)
K	Antivibration Gland (replaces standard gland)
*SOG	NACE Material, Hardness Verification/Certificate
**2507	UNS 32750, 2507 Super Duplex Wetted Materials
***IN625	UNS N06625 Inconel 625 Wetted Materials

Notes:

For 1/4" MP (typically 4 code) option leave part code blank. ie; 20MVBB

316 SS valve bodies are cold worked and not suitable for use in NACE (ISO 15156) applications. If required, contact factory for options.

* SOG suffix also changes CW 316 SS Body material to Annealed 316 SS suitable for NACE service, Pressure reduction of 60% possible

*** Special Materials often have reduced MAWP ratings, see Technical brochure for assistance and for additional material options

Basic MVBB Repair Kits:

MVBB Valves are easily repaired. Add "**R**" to front of valve catalog number for proper repair kit (example: R20MVBB)

Include any catalog number suffix marked on original part when ordering repair kit. (ie; R20MVBB6-SOG)

Material of Construction:

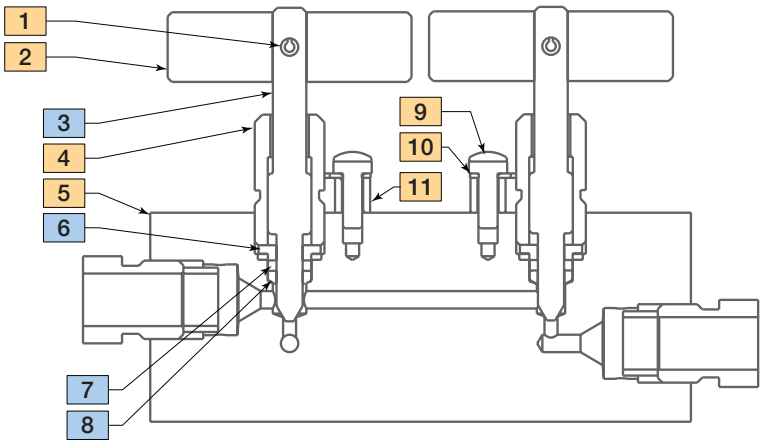

Item #	Description	Material
1	Spring Pin	18-8 SS
2	Handle	316 SS
3	Stem	316 SS
4	Packing Gland	316 SS
5	Body	316 SS
6	Packing Washer	316 SS
7	Packing	PTFE
8	Bottom Washer	316 SS
9	Screw	300 Series SS
10	Locking Device	316 SS
11	Spacer	316 SS
	Typical spare parts found in Repair Kits	

Tel: +45 63 12 83 00 | Email: ps@hymatik.com | www.hymatik.com | Hvidkaervej 27a, DK-5250 Odense SV, Denmark

MVBB Series Block & Bleed Dimensions:

Block and Bleed - MVBB				
Outside Diameter Tube		1/4 (6.35)	3/8 (9.53)	1/2 NPT
Orifice Diameter		0.094 (2.39)	0.094 (2.39)	0.094 (2.39)
Dimensions: inches (mm)	A	3.50 (88.90)	3.88 (98.60)	4.5 (114.3)
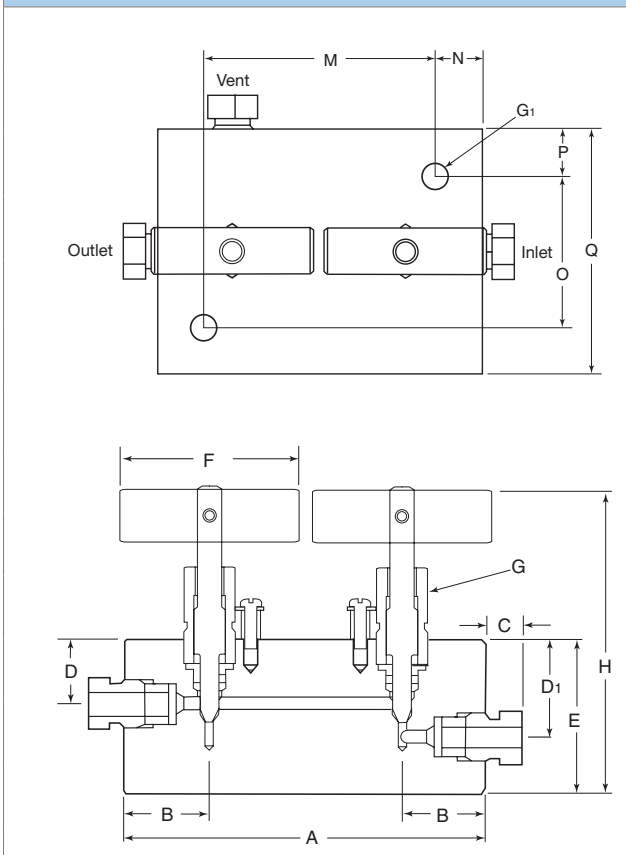	B	0.813 (20.65)	1.00 (25.40)	1.31 (33.3)
	C	0.38 (9.65)	0.44 (11.10)	--
	D	0.625 (15.88)	0.625 (15.88)	0.75 (19)
	D1	0.938 (23.83)	0.938 (23.83)	1.25 (31.8)
	E	1.50 (38.10)	1.50 (38.10)	2.00 (50.8)
	F	1.75 (44.45)	1.75 (44.45)	1.75 (44.45)
	G	5/8" Hex	5/8" Hex	5/8" Hex
	G1	0.281 (7.14)	0.281 (7.14)	0.281 (7.14)
	H*	2.94 (74.68)	2.94 (74.68)	3.41 (86.6)
	M	2.50 (63.50)	2.88 (73.15)	3.50 (89)
	N	0.485 (12.32)	0.50 (12.70)	0.50 (12.70)
	O	1.63 (41.40)	1.63 (41.40)	1.75 (44.5)
	P	0.50 (12.7)	0.50 (12.7)	0.50 (12.7)
	Q	2.63 (66.7)	2.63 (66.7)	2.75 (70)

G1 - Bracket mounting hole size • H* - Dimension is with stem in closed position
All dimensions for reference only and subject to change • For prompt service, Parker Autoclave stocks select products. Consult factory.

20DBNV Series: Pressures to 20,000 psi (1379 bar)

Double Block & Bleed Needle Type Manifold Valve

Principle of Operation:



Parker Autoclave Engineers DBNV double block and bleed needle valve provides true double valve isolation with a third vent valve in between for venting or bleeding, meeting both the API and OSHA valve definitions. Typically used as an interface with other components, usually pressure measurement transmitters, gauges and switches but can also be used for chemical injection, reducing leak points typical of a multi-valve fabrication.

A Double Block & Bleed valve can provide isolation in both the upstream and downstream directions, even in high-pressure or high-temperature situations. Isolation is important in cases where leakage through a valve could have major consequences.

DBNV Double Block & Bleed Manifold Valve Features:

- 20DBNV Series valve design provides large valve performance in a small package
- Tubing sizes: 1/4" to 3/4" Medium Pressure
- Rising stem/barstock body design typical of SM Series Valves
- Metal-to-metal seating achieves bubble-tight shut-off, longer stem/seat life in abrasive flow, greater durability for repeated on/off cycles and excellent corrosion resistance
- PTFE packing below stem threads provide dependable stem and body sealing. Optional packing materials available.
- Non-Rotating Stems prevent stem/seat galling
- Temperature Rated -423° to 1200°F (-252° to 650°C) with options
- Manufactured with UNS S31600 cold worked 316 stainless steel made to PAE proprietary standard

Parker Autoclave Engineers DBNV Manifold valves are complemented by a complete line of high pressure fittings and tubing. Traceability is ensured by use of heat and purchase order codes etched on valve body that also include model number, MAWP rating, and material type references. All valves include connection collar and gland nut unless requested otherwise.

Tel: +45 63 12 83 00 | Email: ps@hymatik.com | www.hymatik.com | Hvidkaervej 27a, DK-5250 Odense SV, Denmark

Tube Outside Diameter Size (inches)	Connection Type	Orifice Size Inches (mm)	Rated C_V*	Pressure Rating psi (bar) @Room Temperature**
1/4	SF250CX (1/4" MP)	0.093 (2.36)	0.10	20,000 (1379)
3/8	SF375CX (3/8" MP)	0.093 (2.36)	0.27	20,000 (1379)
9/16	SF562CX (9/16" MP)	0.312 (7.92)	0.65	20,000 (1379)
3/4	SF750CX20 (3/4" MP)	0.438 (11.2)	2.52	20,000 (1379)
1/4	F250C (1/4" HP)	0.093 (2.36)	0.08	20,000 (1379)
9/16	F562C (9/16" HP)	0.093 (2.36)	0.27	20,000 (1379)

Notes

** For complete temperature ratings see pressure/temperature rating guide in Technical Information section.

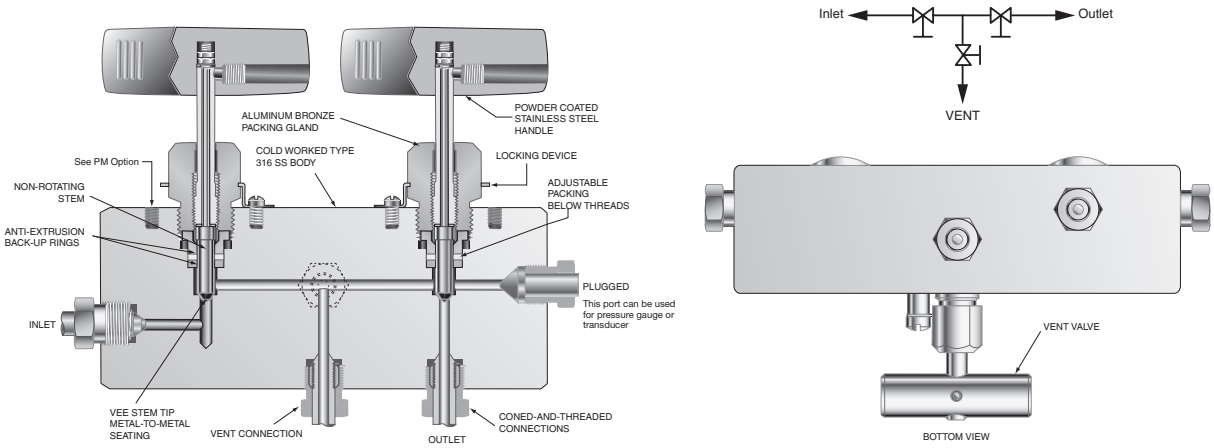

To ensure proper fit use Parker Autoclave tubing

Valve Packing Options:

Standard Parker Autoclave Engineers valves with PTFE packing may be operated from 0°F (-17.8°C) to 450°F (232°C). High and Cryogenic temperature packing and/or extended stuffing box are available for service from -423°F (-252°C) to 1200°F (650°C) by adding the following suffixes to catalog order number:

B Cryogenic trim materials and PTFE packing required when below 0°F (-18°C) to -100°F (-73°C)

LT Extended stuffing box valve with PTFE packing and Cryogenic trim materials to -423°F (-252°C)

TG Standard valve with PTFE-Glass packing -100°F (-73°C) to 600°F (316°C) (See also -B option above when below 0°F (-18°C)

GY Standard valve with Graphite Yarn packing 32°F (0°C) to 800°F (427°C). Used when selecting HT option. Note: 3/4" valve using graphite yarn packing has significant increase in torque needed to actuate valve at pressure. Contact factory with application detail for assistance.

HT Extended stuffing box valve with Graphite Yarn packing to 1200°F (650°C)

(See "Technical Brochure" for Pressure/Temperature effect on temperatures above ambient.)

Tel: +45 63 12 83 00 | Email: ps@hymatik.com | www.hymatik.com | Hvidkaervej 27a, DK-5250 Odense SV, Denmark

Ordering Guide:

For complete information on available end connections, see end connections options below. 20DBNV valves are urnished complete with tube connections.

Building a Part Number: ***Example: 20DBNVM4M4-XX***

Example Part Number:	**20DBNV**	**M4**	**M4**	–	**XX**
Ordering Parameters/Options:	Valve Series	Tube Connection	Vent Connection		Options
Table Reference: (see below)	A	B	C		D

A - Valve Series	
20DBNV	20,000 psi Double Block and Bleed Series Needle Valve

B - Tube Connection (see chart below)	
M4	SF250CX (1/4" MP)
M6	SF375CX (3/8" MP)
M9	SF562CX20 (9/16" MP)
M12	SF750CX (3/4" MP)
H9	F562C (9/16" HP) (API Type III connection)

C - Vent Connection	
M4	SF250CX (1/4" MP) - 20,000 psi MAWP
M6	SF375CX (3/8" MP)
P4	1/4" Female NPT - 15,000 psi MAWP

D - Options (See additional options on page 15)	
K	Antivibration Gland (replaces standard gland)
B	Cryogenic Trim materials required when below 0°F (-18°C) (included in LT)
LT	Low Temperature Extension (to -423°F) (includes PTFE packing)
TG	PTFE Glass (25%) Packing (to 600°F)
GY	Graphite Yarn Packing (to 800°F) [GY Packing increases Handle Torque, contact factory]
HT	High Temperature Extension (to 1200°F) (includes GY packing)
*SOG	NACE Material, Hardness Verification/Certificate
**2507	UNS 32750, 2507 Super Duplex Wetted Materials
***IN625	UNS N06625 Inconel 625 Wetted Materials

Notes:
316 SS valve bodies are cold worked and not suitable for use in NACE (ISO 15156) applications. If required, contact factory for options.

* SOG suffix also changes CW 316 SS Body material to Annealed 316 SS suitable for NACE service, Pressure reduction of 60% possible

*** Special Materials often have reduced MAWP ratings, see Technical brochure for assistance and for additional material options

Basic DBNV Repair Kits:

DBNV Valves are easily repaired. Add “R” to front of valve catalog number for proper repair kit (example: R20DBN-VH9M4).

Include any catalog number suffix marked on original part when ordering repair kit. (ie; R20DBNVH9M4-SOG).

Tel: +45 63 12 83 00 | Email: ps@hymatik.com | www.hymatik.com | Hvidkaervej 27a, DK-5250 Odense SV, Denmark

Material of Construction:

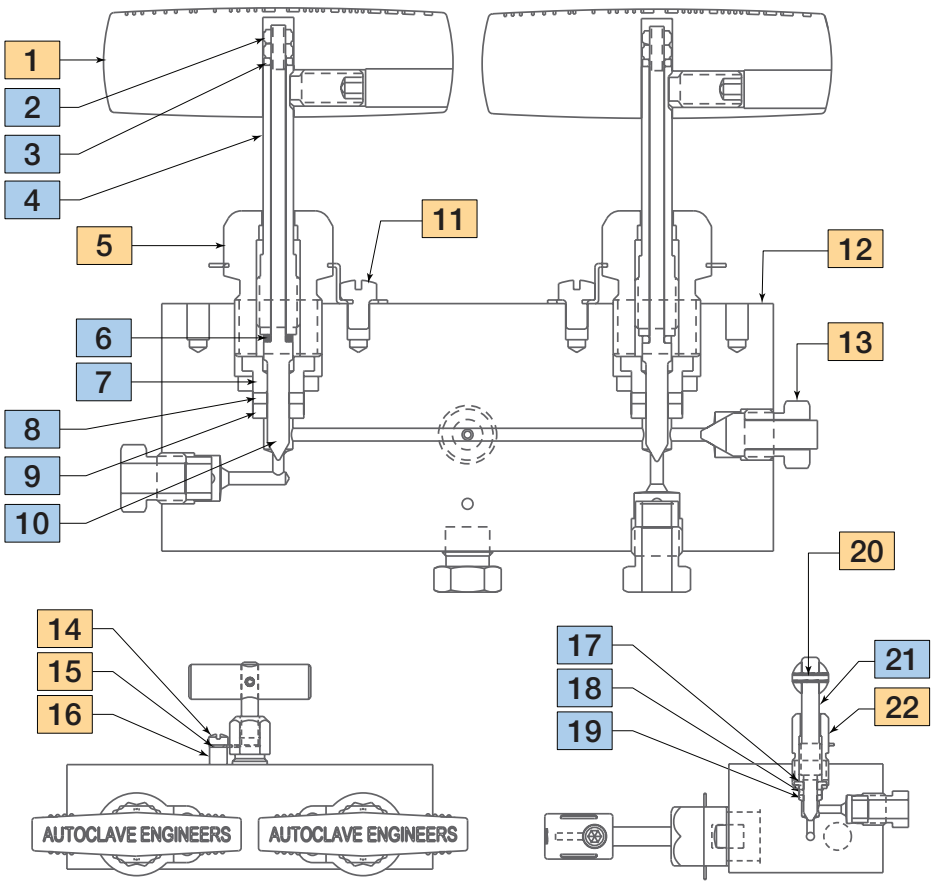

Item #	Description	Material
1	Handle	316 SS
2	Hex Nut, #5-40	300 Series SS
3	Thrust Washer	17-4 PH
4	Stem Sleeve	304 SS
5	Packing Gland	316 SS
6	Thrust Washer	17-4 PH
7	Packing Washer	AMPCO 45
8	Packing	PTFE
9	Bottom Washer	316 SS
10	Vee Stem	316 SS
11	Screw, #10	18-8 SS
12	Body	316 SS
13	Plug	316 SS
14	Screw, 3.55mm	300 Series SS
15	Locking Device	316 SS
16	Spacer	316 SS
17	Packing Washer	316 SS
18	Packing	PTFE
19	Bottom Washer	316 SS
20	Spring Pin	18-8 SS
21	Stem	316 SS
22	Packing Gland	316 SS
	Typical spare parts found in Repair Kits (• indicates part not shown)	

Double Block and Bleed 20DBNV Series Dimensions:

Double Block and Bleed - 20DBNV

Stem Type	VEE		Catalog Number				
			20DBNVM4XX	20DBNVM6XX	20DBNVM9XX	20DBNVH9XX	20DBNVM12XX
Tube Connection Size			1/4-MP	3/8-MP	9/16-MP	9/16-HP	3/4 - MP
Orifice Diameter			0.094 (2.39)	0.125 (3.2)	0.312 (7.92)	0.125 (3.2)	0.438 (11.2)
Dimensions: inches (mm)		A	5.25 (133.35)	5.50 (139.70)	7.50 (190.50)	5.88 (149.35)	14.00 (355)
		B	1.00 (25.40)	1.12 (31.75)	1.50 (38.10)	1.31 (33.32)	1.75 (44.50)
		B1	1.00 (25.40)	1.12 (31.75)	1.50 (38.10)	1.31 (33.32)	1.75 (44.50)
		C	0.38 (9.65)	0.44 (11.18)	0.53 (13.46)	0.53 (13.46)	0.62 (15.75)
		D	1.50 (38.10)	1.50 (38.10)	2.38 (60.45)	1.50 (38.10)	3.00 (76.20)
		D1	1.13 (28.70)	1.13 (28.70)	1.75 (44.45)	1.13 (28.70)	2.25 (57.20)
		E	2.13 (54.10)	2.38 (60.45)	3.38 (85.85)	3.00 (76.20)	4.13 (105.0)
		F	3.00 (76.20)	3.00 (76.20)	4.00 (101.60)	3.00 (76.20)	10.25 (260.0)
		G	1.00 (25.40)	1.00 (25.40)	1.00 (25.40)	1.00 (25.40)	1.00 (25.40)
		H*	4.65 (118.11)	4.91 (124.71)	6.43 (163.32)	5.53 (140.46)	7.35 (187.0)
		M	0.69 (17.53)	0.69 (17.53)	0.69 (17.53)	0.69 (17.53)	1.25 (31.80)
		N	0.50 (12.70)	0.50 (12.70)	0.50 (12.70)	0.50 (12.70)	0.44 (11.2)
		O	2.65 (67.31)	2.75 (69.85)	3.75 (96.25)	2.63 (66.80)	7.00 (177.8)
		P	0.63 (16.00)	0.63 (16.00)	0.63 (16.00)	0.63 (16.00)	.63 (16.00)
		Q	1.50 (38.10)	1.50 (38.10)	1.50 (38.10)	1.75 (44.45)	1.75 (44.45)
		V	1.43 (36.32)	1.43 (36.32)	1.43 (36.32)	1.43 (36.32)	1.43 (36.32)
		X	0.50 (12.70)	0.50 (12.70)	0.50 (12.70)	0.75 (19.05)	0.68 (17.30)
		Y	0.50 (12.70)	0.50 (12.70)	0.75 (19.05)	0.63 (16.00)	0.81 (20.6)
		Z	0.31 (7.87)	0.31 (7.87)	0.50 (12.70)	0.31 (7.87)	0.44 (11.27)
Bracket Mounting Hole Diameter			.28 (7.11)	.28 (7.11)	.40 (10.16)	.40 (10.16)	.44 (11.2)

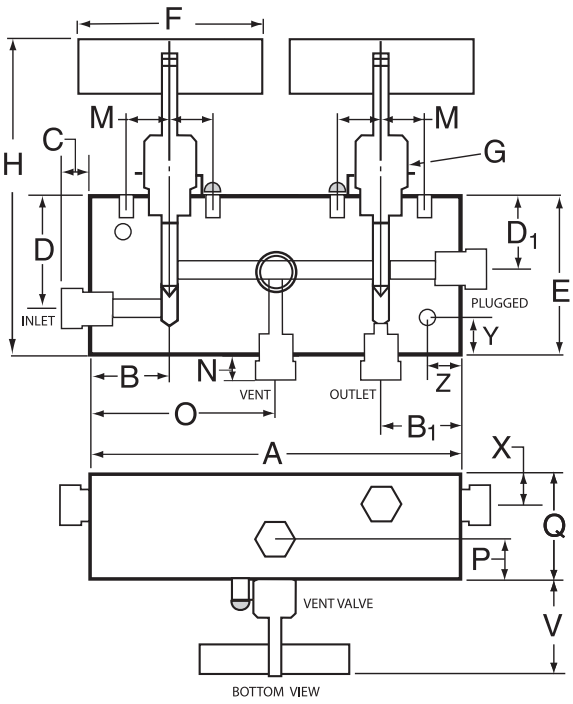

G - Packing Gland mounting hole drill size • H* - Dimension is with stem in closed position • * 3/4" Mounting Holes are parallel (at top of valve) using dimensions given.
Panel mounting drill size: 0.22" all valves • All dimensions for reference only and subject to change • For prompt service, Parker Autoclave stocks select products. Consult factory.

For complete information on available options, contact your Sales representative. 20DBNV Series valves are furnished with connection components unless otherwise specified.

Tel: +45 63 12 83 00 | Email: ps@hymatik.com | www.hymatik.com | Hvidkaervej 27a, DK-5250 Odense SV, Denmark

Oil & Gas Wellhead Gauge/Bleed Valve:

API 6A Single Block Gauge Valve with Optional Bleed Valve

Pressures to 30,000 psi (2070 bar)

Principle of Operation:

Parker Autoclave Engineers Wellhead Gauge valve was designed using the API Type III connection (9/16" HP) and materials suitable for use in NACE (SOG) defined corrosive applications. The 9/16" HP connection - designed for non-NACE 30,000 psi application, when used with Annealed 316 SS instead of our standard cold worked 316 SS, is suitable to 20,000 psi MAWP. Standard Material Medium Pressure connections hold MAWP to 20,000 psi.

The 30GV is a single block valve with one inlet and 3 shared outlet connections. A separate Bleed Valve (20BV or 30BV) optioned with the same 9/16" HP Male connection as explained above, can be used in any of these ports to provide the bleed function if required. The other ports can be used with Pressure Gauge (PAE H-Style) and/or Pressure or Temperature Transmitter.

Bleed/Vent Valve can also be used to evacuate trapped air from pressure systems up to 30,000 psi (2070 bar)

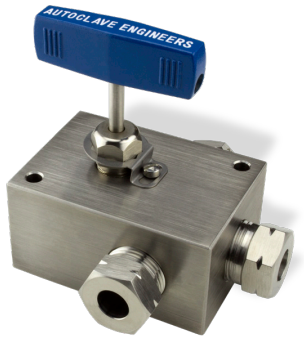

GV Series Wellhead Gauge



BV Series Bleed/Vent Valve

Wellhead Gauge Features:

- One inlet, three outlet of same size and type
- Metal-to-metal bubble tight shut-off
- PTFE packing below stem threads provides dependable sealing
- UNS S31600 cold worked 316 SS as standard (optional annealed materials available)

Bleed Valve Features:

- One piece hex body construction allows easy installation
- Vent port tapped 1/8" NPT for plumbing to safe area
- Tee handle for easy operation
- Positive blow out prevention on stem
- "Adapter Male" * One Piece Male Medium or High Pressure connection, sized as required
- *Adapter Male connection is made to include the matching gland thread as well as the collar spacing and the typical tubing cone tip to form a one-piece connection.

Warning: Vent Outlet position is not controllable once torqued or damage will occur.

Tel: +45 63 12 83 00 | Email: ps@hymatik.com | www.hymatik.com | Hvidkaervej 27a, DK-5250 Odense SV, Denmark

Series	Tube Outside Diameter Size (inches)	Connection Type	Orifice Size Inches (mm)	Rated C_V*	Cold Worked 316 SS Pressure Rating psi (bar)	Annealed (NACE) 316 SS Pressure Rating psi (bar)
Wellhead Gauge Valve						
20GV	3/8	SF375CX (3/8" MP)	0.125 (3.18)	0.23	20,000 (1380)	10,000 (690)
20GV	9/16	SF562CX (9/16" MP)	0.125 (3.18)	0.23	20,000 (1380)	10,000 (690)
30GV	9/16	F562C (9/16" HP)	0.125 (3.18)	0.33	30,000 (2070)	20,000 (1380)
Bleed Valve						
20BV	3/8	@ ASM375CX (3/8" MP)	0.093 (2.36)	-	20,000 (1380)	10,000 (690)
20BV	9/16	@ ASM562CX (9/16" MP)	0.093 (2.36)	-	20,000 (1380)	10,000 (690)
30BV	3/8	@ AM375C (3/8" HP)	0.093 (2.36)	-	30,000 (2070)*	20,000 (1380*)
30BV	9/16	@ AM562C (9/16" HP)	0.093 (2.36)	-	30,000 (2070)*	20,000 (1380*)

Notes
* Rating shown is in closed position.
@ For Explanation of ASM Connection, see Adapter Section in Catalog
BV Valve Rating @ 15,000 psi (1035 bar) in open position.
Glands and collars included in all standard assemblies. Consider using "**-WO**" suffix when using BV Bleed Valve and/or H-Style Gauge that won't require use.

Ordering Guide:

Catalog number is created based on customer selection of product parameters, see below for example.

GV Series Wellhead Gauge Valve

Building a Part Number: *Example: 30GV9078-XXX*

Example Part Number:	**30GV**	**9**	**07**	**8**	**–**	**XXX**
Ordering Parameters/Options:	Valve Series	Outside Diameter Tube Size	Stem Type	Body Pattern		Options
Table Reference: (see below)	A	B	C	D		E

A - Valve Series	
20GV	Wellhead Gauge Valve
30GV	Wellhead Gauge Valve

B - Outside Diameter Tube Size	
6	3/8"
9	9/16"

C - Stem Type	
00	One Piece Vee Stem
07	Non-Rotating Vee Stem

D - Body Pattern	
8	4 Ports, 1 Inlet, 3 Outlets

E - Options	
WO	"With Out" Collar and Gland in all connecitons
K	Antivibration Gland (replaces standard gland)
B	Cryogenic Trim materials required when below 0°F (-18°C) (included in LT)
TG	PTFE Glass (25%) Packing (to 600°F)
*SOG	NACE Material, Hardness Verification/Certificate
***HC	UNS N10276 Hastelloy C276, Wetted Materials (Annealed)
***IN625	UNS N06625 Inconel 625 Wetted Materials (Annealed)
***2507	UNS 32750, 2507 Super Duplex Wetted Materials (Annealed)

Notes:
316 SS valve bodies are cold worked and not suitable for use in NACE (ISO 15156) applications. If required, contact factory for options.

* SOG suffix also changes CW 316 SS Body material to Annealed 316 SS suitable for NACE service, Pressure reduction of 60% possible

*** Special Materials often have reduced MAWP ratings, see Technical brochure for assistance and for additional material options

Tel: +45 63 12 83 00 | Email: ps@hymatik.com | www.hymatik.com | Hvidkaervej 27a, DK-5250 Odense SV, Denmark

GV Series Wellhead Gauge Valve Dimensions:

Wellhead Gauge Valve					
			Catalog Number		
Stem Type	Vee Type (only)		20GV6078	20GV9078	30GV9078
Tube Connection Type			SF375CX (3/8" MP)	SF562CX (9/16" MP)	F562C (9/16" HP)
Tube Connection Size			3/8 MP	9/16 MP	9/16 HP
Pressure Rating: psi (bar)			20,000 (1380)	20,000 (1380)	30,000 (2070)
Dimensions: inches (mm)		A	2.00 (50.80)	2.00 (50.80)	2.00 (50.80)
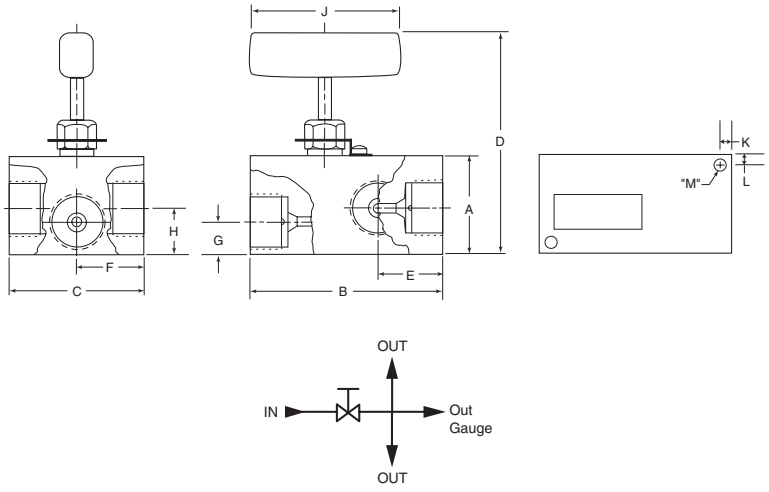		B	3.12 (79.25)	3.88 (98.55)	3.88 (98.55)
		C	2.00 (50.80)	2.75 (69.85)	2.75 (69.85)
		D	4.5 (115	4.5 (115	4.5 (115
		E	1.13 (28.58)	1.31 (33.27)	1.31 (33.27)
		F	1.00 (25.40)	1.38 (34.93)	1.38 (34.93)
		G	0.50 (12.70)	0.66 (16.76)	0.66 (16.76)
		H	0.94 (23.83)	0.94 (23.83)	0.94 (23.83)
		J	3.00 (76.20)	3.00 (76.20)	3.00 (76.20)
		K	.25 (6)	.38 (10)	.38 (10)
		L	.25 (6)	.38 (10)	.38 (10)
Mounting Hole Dimensions		M	.28 (7)	.28 (7)	.28 (7)

All dimensions for reference only and subject to change • For prompt service, Parker Autoclave stocks select products. Consult factory.

Material of Construction:

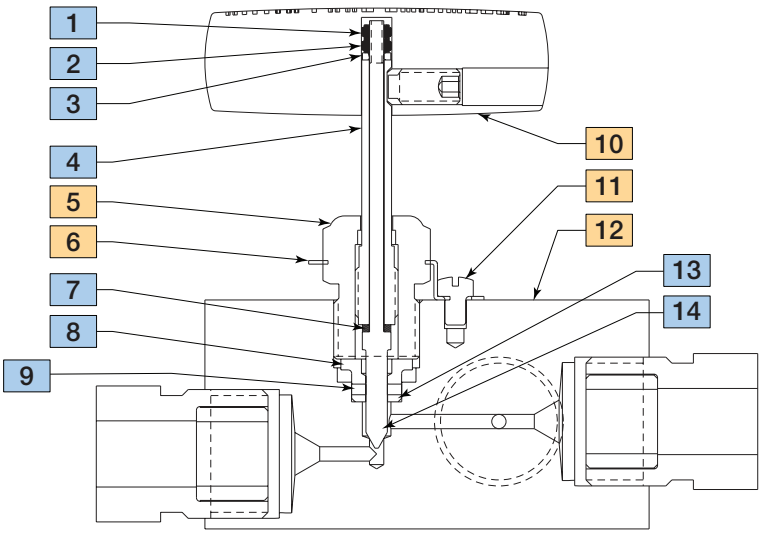

Item #	Description	Material
1	Hex Nut	300 Series SS
2	Hex Nut	300 Series SS
3	Stem	316 SS
4	Sleeve	304 SS
5	Packing Gland	AMPCO 45
6	Locking Device	302 SS
7	Thrust Washer	17-4PH
8	Packing Washer	AMPCO 45
9	Packing	PTFE
10	Handle	316 SS
11	Screw	300 Series SS
12	Body	316 SS
13	Bottom Washer	316 SS
14	Vee Stem	316 SS
	Typical spare parts found in Repair Kits	

Ordering Guide:

Catalog number is created based on customer selection of product parameters, see below for example.

BV Series Bleed/Vent Valve (order individually)

Building a Part Number: *Example: 30BV9002-XXX*

Example Part Number:	30BV	9	00	2	–	XXX
Ordering Parameters/Options:	Valve Series	Outside Diameter Tube Size	Stem Type	Body Pattern		Options
Table Reference: (see below)	A	B	C	D		E

A - Valve Series	
20BV	20,000 psi Medium Pressure Bleed Valve
30BV	30,000 psi High Pressure Bleed Valve

B - Outside Diameter Tube Size	
4	1/4” Adapter Male (AM)
6	3/8” Adapter Male (AM375CX)
9	9/16” Adapter Male (AM562CX MP or AM562C HP))

C - Stem Type	
00	One Piece Vee Stem

D - Body Pattern	
2	Angle (bottom inlet)

E - Options	
*SOG	NACE Material, Hardness Verification/Certificate
***HC	UNS N10276 Hastelloy C276, Wetted Materials (Annealed)
***IN625	UNS N06625 Inconel 625 Wetted Materials (Annealed)
***2507	UNS 32750, 2507 Super Duplex Wetted Materials (Annealed)

Notes:
316 SS valve bodies are cold worked and not suitable for use in NACE (ISO 15156) applications. If required, contact factory for options.

* SOG suffix also changes CW 316 SS Body material to Annealed 316 SS suitable for NACE service, Pressure reduction of 60% possible

*** Special Materials often have reduced MAWP ratings, see Technical brochure for assistance and for additional material options

Bleed Valve Dimensions:

Bleed/Vent Valve

			Catalog Number		
Stem Type	VEE		20BV4002	20BV6002	20BV9002	30BV9002
Connection Type			SM250CX	SM375CX	SM562CX	M562C
Connection Size			1/4 MP	3/8 MP	9/16 MP	9/16 HP
Pressure Rating: psi (bar)			20,000 (1380)	20,000 (1380)	20,000 (1380)	30,000 (2070)
Dimensions: inches (mm)		A	3.06 (78)	3.23 (82.04)	3.68 (93.47)	3.44 (87.38)
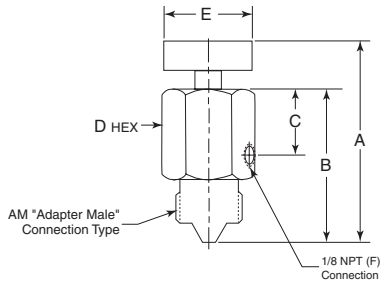		B	2.25 (57)	2.42 (61.47)	2.86 (76.64)	2.61 (66.29)
		C	1.12 (28.5)	1.12 (28.45)	1.12 (28.45)	1.12 (28.45)
		D	1.38 (35)	1.38 (35.05)	1.38 (35.05)	1.38 (35.05)
		E	1.50 (38)	1.50 (38.10)	1.50 (38.10)	1.50 (38.10)

Notes:
*Adapter Male connection is made to include the matching gland thread and collar spacing along with typical tubing tip to form one-piece connection. “Warning” Rotation position is not controllable once torqued or damage will occur.
Bleed Valve max pressure is reduced to 15,000 psi when in OPEN position due to outlet connection

All dimensions for reference only and subject to change • For prompt service, Parker Autoclave stocks select products. Consult factory.

Tel: +45 63 12 83 00 | Email: ps@hymatik.com | www.hymatik.com | Hvidkaervej 27a, DK-5250 Odense SV, Denmark

Material of Construction:

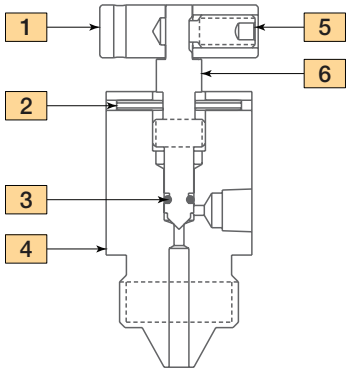

Item #	Description	Material
1	Handle	Aluminum
2	Spring Pin	18-8 SS
3	O-Ring	FKM
4	Body	316 SS
5	Hex Socket Set Screw	300 Series SS
6	Stem	316 SS
Note: No Repair Kit available for this item		

Valve Options:

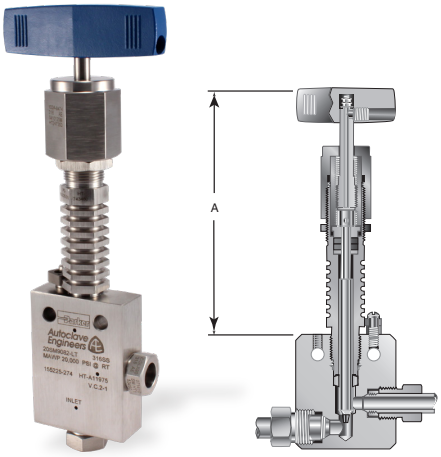

High/Low Temperature Extension:

This option is only available on 20DBNV Double Block & Bleed Valves.

-HT High Temperature (over 800°F (427°C))

-LT Low Temperature (under -100°F (-73°C))

Valve Series	Outside Diameter Tube Size (inches)	Dimensions "A" inches (mm)	Vent Stem Extension (Not Shown)
20DBNV	1/4"	6.16 (157)	5.68 (144)
	3/8"	6.16 (157)	5.68 (144)
	9/16"	6.62 (160)	5.68 (144))
HT option code includes Graphite (-GY) packing LT option code includes 316 SS Trim material and PTFE packing			



Needle Valve Clam Shell Handle Lockout:

(order separately using part numbers shown below, padlock not included)

Clam Shell Handle locks are provided to lockout valves in open or closed position preventing unauthorized personnel from actuating valve during shutdown or emergency situations. This clamshell design is available in four (4) sizes dependent on handle length:

P/N AE004855 – 1" to 2.5" handle length
P/N 90088 – 2.5" to 5.0" handle length
P/N 90194 – 6.5" to 10" handle length
P/N AE004350 – 8" to 13" handle length

Tel: +45 63 12 83 00 | Email: ps@hymatik.com | www.hymatik.com | Hvidkaervej 27a, DK-5250 Odense SV, Denmark

Needle Valve

Yoke Series: Large Bore, Reduced Torque
15,000 psi, 43,000 psi, 50,000 psi

15Y, 43Y and 50Y Series



Principle of Operation:

Parker Autoclave Engineers (PAE) Yoke Series valves are extra heavy-duty, plant grade instrument valves for industrial and severe service applications. Designed in accordance with ASME B31.3 Chapter IX standards, yoke valves feature a stainless steel yoke frame that removes the stem threads away from any process leakage past the packing and includes a heavy duty bearing assembly providing low closing torque for ease of operation. Yoke Series valves are designed for use with Parker Autoclave Engineers Medium or High Pressure tubing and fittings.

Medium and High Pressure Yoke Valve Features:

- Temperature Rated -100° to 800°F (-73° to 427°C) with options
- Manufactured as standard with UNS S31600 cold worked 316 stainless steel to PAE proprietary specification
- Metal-to-metal seating achieves bubble-tight shut-off, longer stem/seat life in abrasive flow, greater durability for repeated on/off cycles and excellent corrosion resistance.
- PTFE packing provides below stem threads provide dependable stem and body sealing. Optional packing materials available.
- Stem sleeve and packing gland materials have been selected to achieve extended thread cycle life and reduced handle torque
- Choice of Vee (shutoff) or Flow Regulating stem tips. N-Dura Coating or Stellite® material option for severe service.
- Available in straight or angle body patterns. Replaceable Seat option available.

Traceability is ensured by use of heat and purchase order codes etched on valve body that also includes model number, MAWP rating, and material type references. All valves include connection collar and gland nut unless requested otherwise. Parker Autoclave Engineers' Yoke Style valves are complemented by a complete line of Medium and High Pressure Cone & Thread fittings, tubing, check valves, relief valves, and line filters as required.

Valve Series	Tube Size (inches)	Running Torque inch-lbs. (N.m)	Seating Torque inch-lbs. (N.m)	MAWP psi(bar)
15Y12	3/4" MP	65 (7)	144 (16)	15,000 (1034)
15Y16	1" MP	87 (10)	192 (22)	15,000 (1034)
43Y16	1" HP	300 (34) - 25 ft/lb	540 (61) - 45 ft/lb	43,000 (2965)
50Y9	9/16" HP	85 (10)	180 (20)	50,000 (3450)

All Parker Autoclave Engineers products are designed in accordance with ASME B31.3 Chapter IX High Pressure Piping standards.

Parker Autoclave Engineers®

ENGINEERING YOUR SUCCESS.

Y Series: Torque Reduction Yoke Valves



Valve Series	Connection Type	Orifice Size Inches (mm)	Rated C_V*	Pressure Rating psi (bar) @Room Temperature**
15Y12	SF750CX (3/4" MP)	0.438 (11.13)	2.41	15,000 (1034)
15Y16	SF1000CX (1" MP)	0.562 (14.27)	3.15	15,000 (1034)
43Y16	F1000C43 (1" HP)	0.375 (9.53)	2.3	43,000 (2965)
50Y9	F562C (9/16" MP)	0.188 (4.76)	0.66	50,000 (3450)

Notes
* Cv values shown are for 2-way straight valve pattern. For 2-way angle pattern, increase Cv value 50% (Based on water). Formula for converting Cv to volumetric flow can be found in Technical Information section.

** Maximum Allowable Working Pressure decreases as temperatures increase - see pressure/temperature rating guide in Technical Information section.

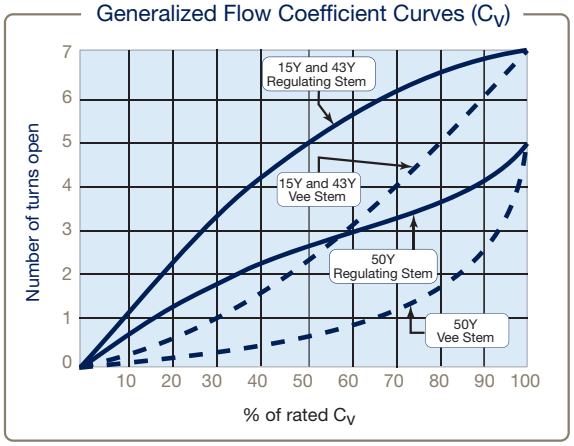

Y Series Flow Curve

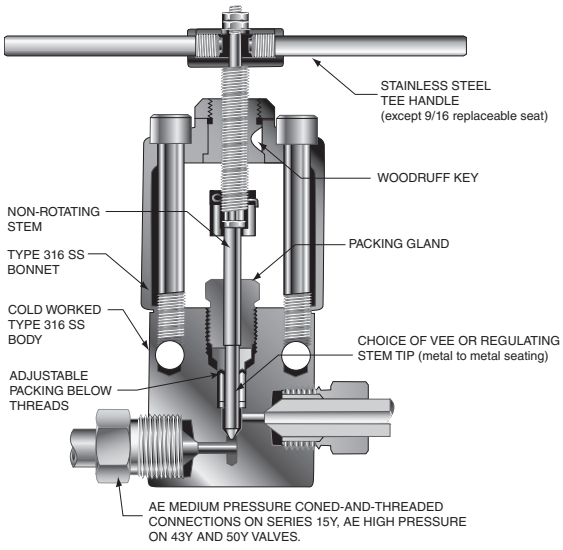

To ensure proper fit use Parker Autoclave tubing

Valve Packing Options:

Standard Parker Autoclave Engineers valves with PTFE packing may be operated from 0°F to 450°F (-18° to 232°C). High and Cryogenic temperature packing and/or extended stuffing box are available for service from -100°F to 600°F (-73° to 315°C) by adding the following suffixes to catalog order number:

-B Standard valve with Cryogenic trim materials and PTFE packing required when below 0° to -100°F (-18° to -73°C)

-TG Standard valve with PTFE-Glass packing -100° to 600°F (-73° to 315°C) See also -B option above when below 0°F (-18°C)

-GY Standard valve with Graphite Yarn packing 32° to 800°F (0° to 427°C)

See "Technical Brochure "for Pressure/Temperature effect on temperatures above ambient.

Tel: +45 63 12 83 00 | Email: ps@hymatik.com | www.hymatik.com | Hvidkaervej 27a, DK-5250 Odense SV, Denmark

Ordering Guide:

For complete information on available stem types, optional connections and additional valve options, see Needle Valve Options section or contact your Sales Representative. Y Series valves are furnished complete with connection components, unless otherwise specified.

Building a Part Number: *Example: 50Y9071*

Example Part Number:	50Y	9	07	1	XX
Ordering Parameters/Options:	Valve Series	Outside Diameter Tube Size	Stem/Seat Type	Body Pattern	Options
Table Reference: (see below)	A	B	C	D	E

A - Valve Series	
15Y	Y Series (Yoke) Needle Valve (3/4" & 1" MP only)
43Y	Y Series (Yoke) Needle Valve (1" HP only)
50Y	Y Series (Yoke) Needle Valve (9/16" HP only)

B - Outside Diameter Tube Size	
9	9/16"
12	3/4"
16	1"

C - Stem/Seal Type	
07	Non-Rotating Vee Stem (on-off service)
08	Non-Rotating Regulating Stem (tapered tip for regulating and shutoff)
87	Vee Stem with Replaceable Seat (angled valve only)
88	Regulating Stem with Replaceable Seat (angled valve only)

D - Body Pattern	
1	2-Way Straight
2	2-Way Angle

E - Options	
For extreme temperatures and other options, see Valve Options.	
TG	PTFE Glass (25%) Packing (-100° to 600°F)
B	Cryogenic (required below 0°F) Trim with and PTFE Packing
GY	High Temperature Graphite Yarn Packing (to 800°F)

See Technical Brochure for Pressure/Temperature effect on temperatures above ambient.

Valve Manuals can be found on our website at www.Autoclave.com, Connection, Running and Seating Torques can be found in the product manual or in our Tools and Installation Catalog Section.

Material of Construction:

Item #	Description	Material
1	Screw, Hex Head	300 Series SS
2	Handle	304 SS
3	Locknut	Plated Steel
4	Bushing	AMPCO 45
5	Upper Stem	316 SS
6	Screw, Socket Head Cap	18-8 SS
7	Stem Retainer	316 SS
8	Split Ring	17-4PH
9	Packing Gland	316 SS
10	Packing Washer	AMPCO 45
11	Packing	PTFE
12	Lower Stem	316 SS
13	Washer	316 SS
14	Hub	316 SS
15	Yoke	316 SS
16	Woodruff Key	Nickel Plated St.
17	Cotter Pin	300 Series SS
18	Thrust Plate	Kennametal K68
19	Grease Fitting	Steel
20	Screw, Round Head	300 Series SS
21	Locking Device	316 SS
22	Spacer	316 SS
23	Bottom Washer	316 SS
24	Body	316 SS
•	Woodruff Key (Handle Hub)	Nickel Plated St.
•	Seat Retainer	316 SS
•	Replaceable Seat	A-286

	Typical spare parts found in Repair Kits
•	Not shown

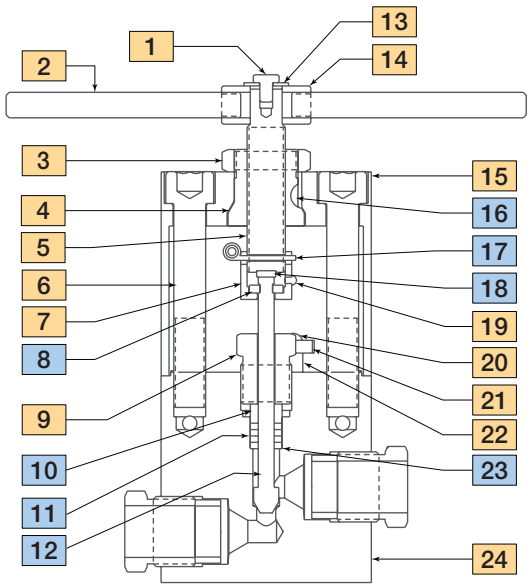

Basic Repair Kits for 316 SS Material:

Stem Type		Basic Repair Kit for 316 SS Material			
		Outside Diameter Tube:			
		3/4" (15,000 psi)	1" (15,000 psi)	1" (43,000 psi)	9/16" (50,000 psi)
2 Way Straight, 2 Way Angle	VEE REG	R15Y1207 R15Y1208	R15Y1607 R15Y1608	R43Y1607 R43Y1608	R50Y907 R50Y908
2 Way Angle Replaceable Seat	VEE REG	R15Y12872 R15Y12882	R15Y16872 R15Y16882	R43Y16872 R43Y16882	R50Y9872 R50Y9882

Consult your Parker Autoclave Engineers representative for other kit numbers, body part numbers, and pricing.
Valve Manuals can be found on our website at www.Autoclave.com, Connection, Running and Seating Torques can be found in the product manual or in our Tools and Installation Catalog Section.

Y Series Dimensions:

2 Way Straight

		Catalog Number			
Stem Type	VEE REG	15Y12071 15Y12081	15Y16071 15Y16081	43Y16071 43Y16081	50Y9071 50Y9081
Outside Diameter Tube		**3/4" MP (19.05)**	**1" MP (25.40)**	**1" HP (25.40)**	**9/16" HP (14.29)**
Orifice Diameter		0.438 (11.13)	0.562 (14.27)	0.375 (9.53)	0.188 (4.78)
Dimensions: inches (mm)	**A**	3.00 (76.20)	4.13 (104.78)	4.13 (104.90)	3.00 (76.20)
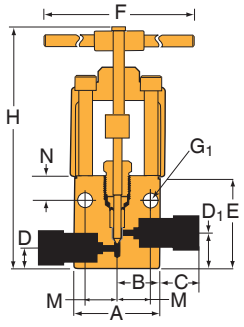	**B**	1.50 (38.10)	2.06 (52.39)	2.07 (52.45)	1.50 (38.10)
	C	0.63 (15.88)	0.63 (15.88)	0.72 (18.29)	0.56 (14.27)
	D	0.75 (19.05)	0.88 (22.35)	1.00 (25.40)	0.68 (17.48)
	D1	1.50 (38.10)	1.88 (47.75)	1.88 (47.75)	1.25 (31.75)
	E	3.50 (88.90)	4.13 (104.78)	4.13 (104.78)	3.25 (82.55)
	F	8.00 (203.20)	10.25 (260.35)	10.25 (260.35)	13.00 (330.20)
	G	-	-	-	-
	G1	0.28 (7.11)	0.28 (7.11)	0.28 (7.11)	0.50 (12.70)
	H*	9.38 (238.25)	10.00 (254.00)	9.56 (242.82)	8.69 (220.73)
	M	1.13 (28.58)	1.50 (38.10)	1.50 (38.10)	1.13 (28.58)
	N	0.88 (22.23)	1.13 (28.58)	1.00 (25.40)	0.88 (22.23)
Block Thickness		1.38 (34.93)	1.75 (44.45)	1.75 (44.45)	1.38 (34.93)

G - Packing Gland mounting hole drill size • G1 - Bracket mounting hole size • H* - Dimension is with stem in closed position • All dimensions for reference only and subject to change
For prompt service, Parker Autoclave stocks select products. Consult factory.

Tel: +45 63 12 83 00 | Email: ps@hymatik.com | www.hymatik.com | Hvidkaervej 27a, DK-5250 Odense SV, Denmark

Y Series Dimensions:

2 Way Angle

		Catalog Number			
Stem Type	VEE REG	15Y12872 15Y12882	15Y16872 15Y16882	43Y16872 43Y16882	50Y9872 50Y9882
Outside Diameter Tube		**3/4" MP (19.05)**	**1" MP (25.40)**	**1" HP (25.40)**	**9/16" HP (14.29)**
Orifice Diameter		0.438 (11.13)	0.562 (14.27)	0.375 (9.53)	0.188 (4.78)
Dimensions: inches (mm)	A	3.00 (76.20)	4.13 (104.78)	4.13 (104.90)	3.00 (76.20)
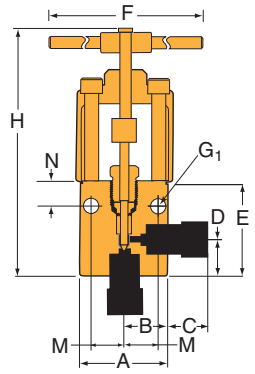	B	1.50 (38.10)	2.06 (52.39)	2.07 (52.45)	1.50 (38.10)
	C	0.63 (15.88)	0.63 (15.88)	0.72 (18.29)	0.56 (14.27)
	D	1.75 (44.45)	2.25 (57.15)	2.31 (58.67)	1.50 (38.10)
	D1	-	-	-	-
	E	3.75 (95.25)	4.50 (114.30)	4.56 (115.82)	3.50 (88.90)
	F	8.00 (203.20)	10.25 (260.35)	10.25 (260.35)	13.00 (330.20)
	G	-	-	-	-
	G1	0.28 (7.11)	0.28 (7.11)	0.28 (7.11)	0.50 (12.70)
	H*	9.63 (244.48)	10.38 (263.53)	10.80 (274.32)	8.81 (223.82)
	M	1.13 (28.58)	1.50 (38.10)	1.50 (38.10)	1.13 (28.58)
	N	0.88 (22.23)	1.13 (28.58)	1.00 (25.40)	0.88 (22.23)
Block Thickness		1.38 (34.93)	1.75 (44.45)	1.75 (44.45)	1.38 (34.93)

2 Way Angle, Replaceable Seat

		Catalog Number			
Stem Type	VEE REG	15Y12872 15Y12882	15Y16872 15Y16882	43Y16872 43Y16882	50Y9872 50Y9882
Outside Diameter Tube		**3/4" MP (19.05)**	**1" MP (25.40)**	**1" HP (25.40)**	**9/16" HP (14.29)**
Orifice Diameter		0.438 (11.13)	0.562 (14.27)	0.375 (9.53)	0.188 (4.78)
Dimensions: inches (mm)	A	3.00 (76.20)	4.13 (104.78)	4.13 (104.90)	3.00 (76.20)
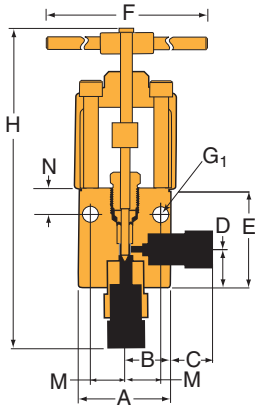	B	1.50 (38.10)	2.06 (52.39)	2.07 (52.45)	1.50 (38.10)
	C	0.63 (15.88)	0.63 (15.88)	0.72 (18.29)	0.56 (14.27)
	D	2.06 (52.32)	2.06 (52.32)	2.13 (54.10)	1.38 (35.05)
	D1	-	-	-	-
	E	4.00 (101.60)	4.13 (104.78)	4.38 (111.25)	3.38 (85.75)
	F	8.00 (203.20)	10.25 (260.35)	10.25 (260.35)	4.00 (101.60)
	G	-	-	-	-
	G1	0.28 (7.11)	0.28 (7.11)	0.28 (7.11)	0.28 (7.11)
	H*	11.31 (287.27)	11.75 (298.45)	11.95 (303.53)	12.12 (307.85)
	M	1.13 (28.58)	1.50 (38.10)	1.50 (38.10)	1.13 (28.58)
	N	0.88 (22.23)	1.03 (26.16)	1.00 (25.40)	1.06 (26.97)
Block Thickness		1.38 (34.93)	1.75 (44.45)	1.75 (44.45)	1.38 (34.93)

G - Packing Gland mounting hole drill size • G1 - Bracket mounting hole size • H* - Dimension is with stem in closed position • All dimensions for reference only and subject to change
For prompt service, Parker Autoclave stocks select products. Consult factory.

Valve Options:

Stem Options:

Most Parker Autoclave Engineers' valves are available with either Vee (on-off) or Regulating (Flow Control) Stems in our standard valve body seat or with our optional replaceable seat as shown below:

VEE Stem

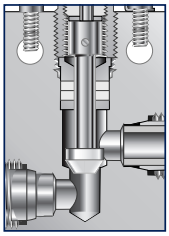

The Vee stem is used for direct on-off, metal-to-metal shut-off with quick-opening flow characteristics.

Regulating Stem

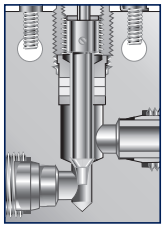

In some applications, more precise flow control is required than is possible with a Vee stem. For these cases, Autoclave offers a non-rotating, two-piece regulating stem which can be used for both control and shut-off. While it is not as precise as the control associated with the MicroMetering stem, especially with smaller flows, it does offer substantially better control than the Vee stem.

Replaceable Seat
(with Vee Stem)

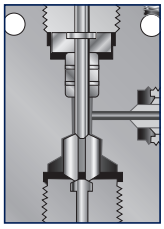

Replaceable seat option is only available with Right-Angle Style body. Replaceable seat is supplied as standard with an additional seat - rotate to use second side. Can be used with either stem type.
Options include Stellite material or N-Dura coating to increase service life.

Tel: +45 63 12 83 00 | Email: ps@hymatik.com | www.hymatik.com | Hvidkaervej 27a, DK-5250 Odense SV, Denmark

Valve Options:

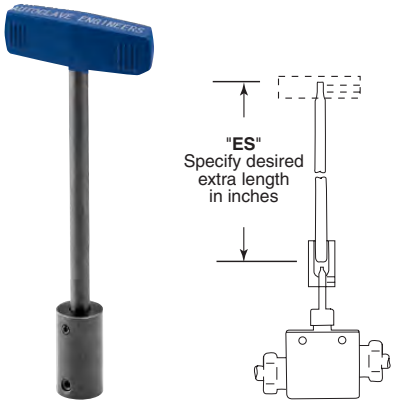

ES Stem Extender:

Stem extenders are offered for High and Low temperature operation or to extend through panel or barricade.

To order valve with Stem Extender, add "**ES-**" and length (6", 12", 18", 24") to beginning of valve part number e.g. ES12-50Y9071. Other lengths to special order.

To order Stem Extender only, provide valve model prefix e.g. ES12-50Y9. Handle not included – use same provided with original valve.



Needle Valve Clam Shell Handle Lockout:

(order separately using part numbers shown below, padlock not included)

Clam Shell Handle locks are provided to lockout valves in open or closed position preventing unauthorized personnel from actuating valve during shutdown or emergency situations. This clamshell design is available in four (4) sizes dependent on handle length:

P/N 90088 – 2.5" to 5.0" handle length
P/N 90194 – 6.5" to 10" handle length

Tel: +45 63 12 83 00 | Email: ps@hymatik.com | www.hymatik.com | Hvidkaervej 27a, DK-5250 Odense SV, Denmark

needle valve actuators

Tel: +45 63 12 83 00 | Email: ps@hymatik.com | www.hymatik.com | Hvidkaervej 27a, DK-5250 Odense SV, Denmark

Needle Valve Actuators
Pneumatic, Piston Type

For: MVE, P, 10V, SW, SM, SC, V, VM, QS,
Needle Valves to 150,000 psi (10340 bar)



Principle of Operation:

The need to control process and vent valves from a remote location makes air operated valves a vital component to many process applications.

All Parker Autoclave Engineer's needle valves are available with piston type pneumatic actuators. Six sizes of air actuators (light, mini-light, medium, heavy duty or extra heavy, single and double stage) are offered to meet the service requirements of Parker Autoclave Engineer's Low, Medium and High Pressure needle valves. Both air-to-open (normally closed) and air-to-close (normally open) designs are included in the product line. Dual acting Air-to-Open & Close actuators are also available.

For most Parker Autoclave Engineers valve series there is a choice of two or more actuator designs. This provides the most efficient and economical pneumatic valve operation for any combination of process requirements and available air pressure.

Actuators are available for outdoor service. These operators provide corrosion resistant components and prevent the ingress of outside elements. Weatherproof or Explosionproof (CUL/ATEX) Limit Switch position indication is available upon request.

Features and Benefits:

- Fail Close (Air-to-Open) or Fail Open (Air-to-Close) with Spring Return
- Dual Acting (Air-to-Open & Close) actuators are available in all sizes except Mini-Light and Light. Note: Not Fail-Safe
- Piston actuator sizing incorporates maximum allowable air pressure of 100 psi
- Yoke design for separation of process and air pressure/allows for limit switch position indication
- Visual Valve Position Indicator as standard - Limit Switch options available
- Anodized Aluminum Housing (for corrosion and wear resistance)
- -20°F to 200°F (-29° to 93°C) ambient temperature range. (for operation below 30°F (-1°C) dry air must be used and heat tracing is recommended.)

ENGINEERING YOUR SUCCESS.

Tel: +45 63 12 83 00 | Email: ps@hymatik.com | www.hymatik.com | Hvidkaervej 27a, DK-5250 Odense SV, Denmark

General Information

Pneumatic Piston Actuators

Pneumatic Actuator:

Six sizes of air operators (light, mini-light, medium, heavy duty or extra heavy, single and double stage) are offered for remote on-off operation or automatic operation of Parker Autoclave Engineer's low, medium or high pressure valves. The actuators are available in air-to-open (normally closed) and air-to-close (normally open) designs.

Remote On-Off:

Parker Autoclave Engineer's air-operated valves, ATO (Air-to-Open), ATC (Air-to-Close), or AOC (Dual Acting Air-to-Open & Close) pneumatic actuators can be controlled by a 3-way manual low pressure valve or by a 3-way low pressure solenoid valve (user supplied) mounted in the actuator supply air line. Parker Autoclave Engineer's air-operated, high
pressure valves permit process control from a remotely located panel without the necessity of piping high pressure lines to the control panel. Safety is greatly increased and process "hysteresis" is reduced. Prudent selection of ATO or ATC valves, together with the air controlling devices, permit the system design to "fail safe" in either the closed or open condition in the event of loss of air pressure, or electrical failure, or malfunction. Where explosion proof conditions are a requirement, pneumatic actuated valves can be considered.

Duty Rating	Operator	Type	Ordering Suffix	Dimensions: inches (mm)	
				A	B
Light	Piston	Air -to-Open	OLP	5.50 (140)	2.81 (727)
		Air -to-Close	CLP	3.94 (100)	2.81 (72)
Mini Light	Piston	Air -to-Open	OHLP	3.84 (98)	3.06 (78)
		Air -to-Close	CHLP	2.61 (66)	3.06 (78)
Medium	Piston	Air -to-Open	O1S	8.25 (210)	5.69 (145)
		Air -to-Close	C1S	5.50 (140)	5.69 (145)
Heavy	Piston	Air -to-Open	O2S	11.88 (302)	5.69 (145)
		Air -to-Close	C2S	8.50 (216)	5.69 (145)
Extra Heavy Single Stage	Piston	Air -to-Open	HO1S	15.16 (385)	9.44 (240)
		Air -to-Close	HO1S	8.75 (218)	9.44 (240)
Extra Heavy Double Stage	Piston	Air -to-Open	HO2S	18.50 (470)	9.44 (240)
		Air -to-Close	HC2S	11.94 (303)	9.44 (240)

Outdoor Service Actuators

Medium	Piston	Air -to-Open	O1SOD	8.25 (210)	5.69 (145)
		Air -to-Close	C1SOD	5.50 (140)	5.69 (145)
Heavy	Piston	Air -to-Open	O2SOD	11.88 (302)	5.69 (145)
		Air -to-Close	C2SOD	8.50 (216)	5.69 (145)
Extra Heavy Single Stage	Piston	Air -to-Open	HO1SOD	15.16 (385)	9.44 (240)
		Air -to-Close	HC1SOD	8.75 (218)	9.44 (240)
Extra Heavy Double Stage	Piston	Air -to-Open	HO2SOD	18.50 (470)	9.44 (240)
		Air -to-Close	HC2SOD	11.94 (303)	9.44 (240)

Dual Acting: For Dual Acting (Air-to-Open & Close) option, replace "O" or "C" suffix code character with a "D" (Not available in Mini-Light or Light actuator sizes) Dimensions are the same as the Air-to-Close type actuators.

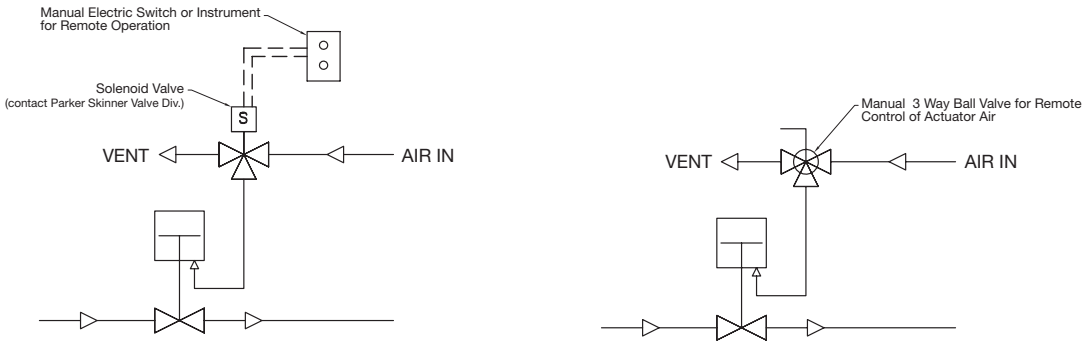

Tel: +45 63 12 83 00 | Email: ps@hymatik.com | www.hymatik.com | Hvidkaervej 27a, DK-5250 Odense SV, Denmark

Piston Type Valve Actuators

Piston type air-operated valves offer a unique, reliable design providing for a long and dependable life. These actuators are quick acting, typically less than one (1) second activation time (Dependent on air flow rate to piston and process pressure required at valve inlet)) and long lasting (tested to over 100,000 cycles).

Parker Autoclave Engineer's piston type actuators feature:

- Air-to-Open (Inlet Pressure may be required) or Air-to-Close with spring return or Dual Acting (no spring) Options
- Anodized Aluminum Piston and Housing (100 psi max)
- Yoke design for separation of process and air drive sections for safety †
- Ease of stem replacement
- Stem position indicator is standard†
- High actuator cycle life with lifetime lubrication
- 1/8" NPT air inlet connection except Extra Heavy duty has 3/8" NPT
- Single or Dual (Open & Close) Limit Switch options are available in Weatherproof, Explosionproof (Class 1, Division 1, Groups C & D, Temp. Group T6) versions. Consult Factory

Note: Air supply to Air-to-Close Actuator must be regulated to the pressure shown in subsequent charts based on application pressure. Air pressure over required pressure may damage valve seat.

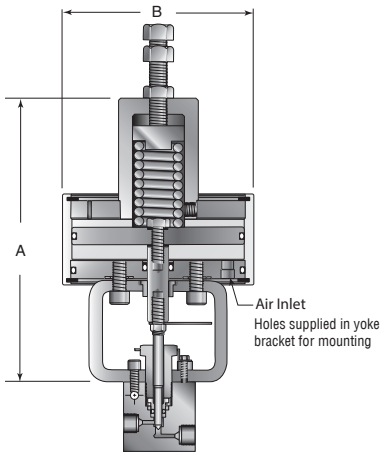

Air-to-Open (ATO)

NOTE: Air inlet for air to open operator is located in the back, opposite the front of valve. For other locations, consult factory.

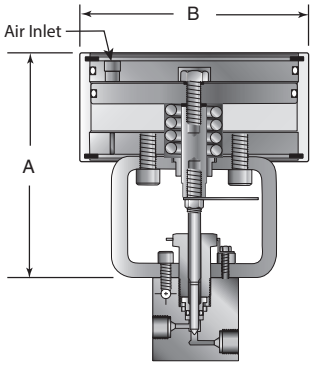

Air-to-Close (ATC)

† The standard Mini-Light operator does not utilize the yoke design. A yoke design is available upon request.

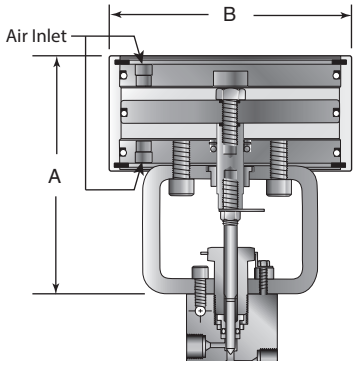

Dual Acting, Air-to-Open and Close
(Not available in Light or Mini-Light versions)

Note:
See "Yoke Mounting Dimensions" on page 17 should these mounting points be preferred instead of valve body mounting holes.

Technical Detail

Air Operated Materials:

Cylinder, piston, cover plates, spring housing: Anodized aluminum (for corrosion and wear resistance).
Yoke: Painted Steel

Technical Data:

Air Operator

- Maximum allowable working pressure: 100 psi (6.89 bar)
- Allowable piston temperature range: -20°F to 200°F
  (-29°C to 93°C), operating below 30ºF (-1.1ºC) with dry air only (heat trace may be needed for lower temperatures).
- Area of piston:
  Light duty - 4.9 sq. in (31.6 sq. cm)
  Mini-Light duty - 5.4 sq. in (34.8 sq. cm)
  Medium duty - 19.6 sq. in (126.5 sq. cm)
  Heavy duty - 39.2 sq. in (252.9 sq. cm)
  Extra Heavy duty single stage - 56 sq. in (361.3 sq. cm)
  Extra Heavy duty double stage - 112 sq. in (722.6 sq. cm)
- Approximate air usage/cycle @ 100 psi (6.89 bar) - For Dual Acting, double air usage shown below:
  Light duty - .003 SCF (.00008 SCM)
  Mini-Light duty - .007 SCF (.0002 SCM)
  Medium duty - .04 SCF (.0011 SCM)
  Heavy duty - .08 SCF (.0022 SCM)
  Extra Heavy duty single stage - .33 SCF (.0095 SCM)
  Extra Heavy duty double stage - .67 SCF (.019 SCM)
- Tested to 100,000 cycles at 100 psi (6.89 bar) with no leakage or signs of wear or fatigue.

To select Air-to-Close Needle Valve Actuator:

Example:
Need to know: Valve Model/Connection Size - **20SM9071 Needle Valve**
Indoor or Outdoor Service - **Outdoor Service**
Maximum Operating Pressure: **Fluid - 12,000 psi**
Maximum Available Air Pressure - **60 psi**
Select Actuator Type : Air-to-Close type (Normally Open)

Example: Using chart on page 6 (Air-to-Close Actuators), select **20SM9 Section**

Across top of chart, select **12 Ksi System Pressure** (12,000 psi max system pressure)
Go down that column to **20SM9 Section** to first row filled with number (air pressure)
First row with number is **55 –** as your available **air pressure is 60 psi**, you do not have to go any further (if this number was more than 60, continue to next row)

This row (**Heavy Duty Actuator**) confirms that this actuator needs 55 psi to close the 20SM9 valve at 12,000 psi and you have 60 psi available. Suffix code for this actuator can be found in this chart or on page 4 - find “Heavy Duty - Air-to-Close” - Suffix code is “**-C2SOD**”, remembering the Service location was “Outdoor” - add this suffix to the 20SM9 body style of your choice. **Example: 20SM9071-C2SOD**

CAUTION: While testing has shown O-rings to provide satisfactory service life, both cyclic and shelf life may vary widely with differing service conditions, properties of reactants, pressure and temperature cycling and age of the O-ring, **FREQUENT INSPECTIONS SHOULD BE MADE** to detect any deterioration, and O-rings replaced as required. *Maximum pressure rating is based on the lowest rating of any component. Actual working pressure may be determined by tubing pressure rating,if lower.

Tel: +45 63 12 83 00 | Email: ps@hymatik.com | www.hymatik.com | Hvidkaervej 27a, DK-5250 Odense SV, Denmark

Air Operator Sizing Data

Air To Close

Series MVE Valves

Valve Series	Operator Duty		System Pressure KSI (bar) 1 to 6 (410)	8 (550)	10 (690)	12 (830)	14 (970)	15 (1035)	Maximum Pressure psi (bar)*	Stem Travel in (mm	Flow Coefficient***
MVE1	Mini-Light Duty -OHLP	Air Pressure psi (bar)	75 (5)	75 (5)	80 (6)	90 (6)	95 (7)	100 (7)	15,000 (1035)	.094 (2)	0.05
MVE2										.094 (2)	.11

Series 10V and SW Valves

Valve Series	Operator Duty		System Pressure KSI (bar) 1 to 4 (275)	6 (410)	8 (550)	10 (690)	12 (830)	14 (970)	15 (1035)	Maximum Pressure psi (bar)*	Stem Travel in (mm)	Flow Coefficient***
10V2	Light Duty -CLP	Air Pressure psi (bar)	30 (2)	40 (3)	55 (4)	65 (4)	85 (6)	95 (7)	100 (7)	15,000 (1035)	.16 (4)	.12
	Medium Duty -C1S		25 (2)	25 (2)	25 (2)	25 (2)	25 (2)	25 (2)	30 (2)			
SW4	Medium Duty -C1S		40 (3)	40 (3)	40 (3)	50 (3)	55 (4)	60 (4)	65 (4)	15,000 (1035)	.25 (6)	.65
SW6	Medium Duty -C1S		50 (3)	50 (3)	55 (4)	70 (5)	75 (5)	85 (6)	90 (6)	15,000 (1035)	.25 (6)	.95
	Heavy Duty -C2S		20 (1)	25 (2)	30 (2)	35 (2)	40 (3)	45 (3)	50 (3)	15,000 (1035)		
SW8	Medium Duty -C1S		65 (4)	70 (5)	100 (7)					8,000 (552)	.38 (10)	1.90
	Heavy Duty -C2S		35 (2)	35 (2)	50 (3)	60 (4)				10,000 (690)		

Series 15SM Valves (replaces 10SM Valves)

Valve Series	Operator Duty		System Pressure KSI (bar) 4 (275)	6 (410)	8 (550)	10 (690)	12 (830)	14 (970)	16 (1100)	18 (1240)	20 (1380)	Maximum Pressure psi (bar)*	Stem Travel in (mm)	Flow Coefficient**
15SM9 15QS9	Medium Duty -C1S	Air Pressure psi (bar)	65 (4)	75 (5)	100 (7)							8,600 (593)	.38 (10)	1.75
	Heavy Duty -C2S		35 (2)	40 (3)	50 (3)	55 (4)	60 (4)	70 (5)	75 (5.2)			15,000 (1035)		
	Extra Heavy Duty Single Stage -HC1S		30 (2)	30 (2)	35 (2)	45 (3)	50 (3.5)	55 (3.8)	60 (4.2)			15,000 (1035)		
	Extra Heavy Duty Two Stage -HC2S		15 (1)	15 (1)	20 (1)	20 (1)	25 (1.7)	30 (2)	35 (2.4)			15,000 (1035)		
15SM12 15QS12	Heavy Duty -C2S	Air Pressure psi (bar)	45 (3)	60 (4)	80 (6)	100 (7)						10,000 (690)	.44 (11)	2.80
	Extra Heavy Duty Single Stage -HC1S		35 (2)	50 (3)	60 (4)	70 (5)	80 (5.5)	95 (6.5)	100 (6.9)			15,000 (1035)		
	Extra Heavy Duty Two Stage -HC2S		20 (1)	25 (2)	30 (2)	35 (2)	40 (2.8)	45 (3.1)	50 (3.5)			15,000 (1035)		

* Maximum pressure rating is based on the lowest rating of any components. Actual working pressure may be determined by tubing pressure rating, if lower.

** C_V data is for 2-way straight valves. For angle pattern add approximately 50% to the C_V value.

Tel: +45 63 12 83 00 | Email: ps@hymatik.com | www.hymatik.com | Hvidkaervej 27a, DK-5250 Odense SV, Denmark

Air Operator Sizing Data

Air To Close

Series 15SM Valves (con't)

Valve Series	Operator Duty		System Pressure KSI (bar)										Maximum Pressure psi (bar)*	Stem Travel in (mm)	Flow Coefficient**
			1 to 3 (210)	4 (280)	6 (410)	8 (550)	10 (690)	12 (830)	14 (970)	16 (1100)	18 (1240)	20 (1380)			
15SM16 15QS16	Extra Heavy Duty Single Stage -HC1S	Air Pressure psi (bar)	45 (3)	50 (3)	70 (5)	95 (7)							8,500 (586)	.56 (14)	5.20
	Extra Heavy Duty Two Stage -HC2S		25 (2)	25 (2)	35 (2)	45 (3)	55 (4)	65 (4.5)					12,500 (860)		
15SM24	Extra Heavy Duty Two Stage -HC2S		35 (2)	40 (3)	55 (4)	75 (5)	90 (6)						10,000 (690)	.75 (19)	14

Series 20SM Valves

Valve Series	Operator Duty		System Pressure KSI (bar)									Maximum Pressure psi (bar)*	Stem Travel in (mm)	Flow Coefficient**
			4 (280)	6 (410)	8 (550)	10 (690)	12 (830)	14 (970)	16 (1100)	18 (1240)	20 (1380)			
20SM4 15P4† 15QS4	Medium Duty -C1S	Air Pressure psi (bar)	40 (3)	40 (3)	40 (3)	50 (3)	60 (4)	70 (5)	80 (6)	85 (6)	90 (7)	20,000 (1380)	.25 (6)	.31
	Heavy Duty -C2S		20 (1)	20 (1)	20 (1)	25 (2)	30 (2)	35 (2)	40 (3)	45 (3)	50 (3)			
20SM6 15P6† 15QS6	Medium Duty -C1S		45 (3)	45 (3)	45 (3)	55 (4)	65 (4)	75 (5)	85 (6)	95 (7)	100 (7)	19,000 (1310)	.25 (6)	.75
	Heavy Duty -C2S		25 (2)	25 (2)	25 (2)	30 (2)	35 (2)	40 (3)	45 (3)	50 (3)	55 (4)	20,000 (1380)		
20SM9 15P8†	Medium Duty -C1S		60 (4)	65 (4)	80 (6)	100 (7)						10,700 (738)	.38 (10)	1.30
	Heavy Duty -C2S		30 (2)	30 (2)	40 (3)	50 (3)	55 (4)	60 (4)	70 (5)	80 (6)	85 (6)	20,000 (1380)		
	Extra Heavy Duty Single Stage -HC1S		25 (2)	25 (2)	30 (2)	35 (2)	45 (3)	50 (3)	55 (4)	60 (4)	65 (4)	20,000 (1380)		
20SM12 10P12†	Medium Duty -C1S		80 (5)	100 (7)								6,100 (421)	.44 (11)	2.50
	Heavy Duty -C2S		40 (3)	50 (3)	60 (4)	75 (5)	90 (6)	100 (7)				13,600 (938)		
	Extra Heavy Duty Single Stage -HC1S		30 (2)	40 (3)	50 (3)	60 (4)	65 (4)	75 (5)	85 (6)	95 (7)	100 (7)	19,000 (1310)		
	Extra Heavy Duty Two Stage -HC2S		15 (1)	20 (1)	25 (2)	30 (2)	35 (2)	40 (3)	45 (3)	50 (3)	50 (3)	20,000 (1380)		

* Maximum pressure rating is based on the lowest rating of any components. Actual working pressure may be determined by tubing pressure rating, if lower.
** C_V data is for 2-way straight valves. For angle pattern add approximately 50% to the C_V value. † Maximum rating based on the valve rating.

Tel: +45 63 12 83 00 | Email: ps@hymatik.com | www.hymatik.com | Hvidkaervej 27a, DK-5250 Odense SV, Denmark

Air Operator Sizing Data

Air To Close

Series 20SM Valves

Valve Series	Operator Duty		4 (280)	6 (410)	8 (550)	10 (690)	12 (830)	14 (970)	16 (1100)	18 (1240)	20 (1380)	Maximum Pressure psi (bar)*	Stem Travel in (mm)	Flow Coefficient**
		Air Pressure psi (bar)												
20SM16 10P16†	Heavy Duty -C2S		50 (3)	70 (5)	100 (7)							8,800 (607)	.56 (14)	3.40
	Extra Heavy Duty, Single Stage -HC1S		40 (3)	55 (4)	70 (5)	85 (6)	100 (7)					12,500 (860)		
	Extra Heavy Duty, Two Stage -HC2S		20 (1)	25 (2)	35 (2)	40 (3)	50 (3)	55 (4)	60 (4)	70 (5)	75 (5)	20,000 (1380)		

* Maximum pressure rating is based on the lowest rating of any components. Actual working pressure may be determined by tubing pressure rating, if lower.
** C_V data is for 2-way straight valves. For angle pattern add approximately 50% to the C_V value. † Maximum rating based on the valve rating.

Series 30SC, 43SC Valves

Valve Series	Operator Duty		System Pressure KSI (bar)												Maximum Pressure psi (bar)*	Stem Travel in (mm)	Flow Coefficient**
			1 to 10 (690)	15 (1035)	16 (1100)	18 (1240)	20 (1380)	22 (1520)	24 (1650)	26 (1790)	28 (1930)	30 (2060)	35 (2410)	40 (2760)			
		Air Pressure psi (bar)															
30SC16	Extra Heavy Duty, Two Stage -HC2S		30 (2)	40 (3)	45 (3)	50 (3)	55 (4)	60 (4)	65 (5)	70 (5)	75 (5)	80 (6)			30,000 (2070)	.50 (13)	2.61
43SC16 (see note)	Extra Heavy Duty, Two Stage -HC2S		30 (2)	40 (3)	45 (3)	50 (3)	55 (4)	55 (4)	60 (4)	65 (4)	70 (5)	75 (5)	85 (6)	95 (7)	*** 40,000 (2760)	.52 (13)	2.61

Note: *** Maximum pressure with actuator 40,000 psi use actuators -HC2S.4 (valve orifice .406" diameter)

Series 30VM Valves

Valve Series	Operator Duty		System Pressure KSI (bar)										Maximum Pressure psi (bar)*	Stem Travel in (mm)	Flow Coefficient**
			12 (830)	14 (970)	16 (1100)	18 (1240)	20 (1380)	22 (1520)	24 (1650)	26 (1790)	28 (1930)	30 (2070)			
		Air Pressure psi (bar)													
30VM4	Medium Duty -C1S		25 (2)	25 (2)	30 (2)	35 (2)	35 (2)	40 (3)	45 (3)	50 (3)	50 (3)	55 (4)	30,000 (270)	.19 (5)	.12
	Heavy Duty -C2S		15 (1)	15 (1)	15 (1)	20 (1)	20 (1)	20 (1)	25 (2)	25 (2)	25 (2)	30 (2)			
30VM6 and 30VM9	Medium Duty -C1S		30 (2)	25 (2)	40 (3)	45 (3)	50 (3)	55 (4)	60 (4)	65 (4)	70 (5)	75 (5)	30,000 (270)	.19 (5)	.23 (30VM6)
	Heavy Duty -C2S		15 (1)	20 (1)	20 (1)	25 (2)	25 (2)	30 (2)	30 (2)	35 (2)	35 (2)	40 (3)			.33 (30VM9)

Tel: +45 63 12 83 00 | Email: ps@hymatik.com | www.hymatik.com | Hvidkaervej 27a, DK-5250 Odense SV, Denmark

Air Operator Sizing Data

Air To Close

Series 40VM Valves

Valve Series	Operator Duty		System Pressure KSI (bar)											Maximum Pressure psi (bar)*	Stem Travel in (mm)	Flow Coefficient**
			1-10 (7-69)	15 (103)	20 (138)	25 (172)	30 (207)	35 (241)	40 (276)							
40VM9	Medium Duty -C1S	Air Pressure psi (bar)	40 (3)	50 (4)	60 (4)	70 (5)	80 (6)	90 (6)	90 (7)					40,000 (2760)	.25 (6)	.28
	Heavy Duty -C2S		20 (1)	25 (2)	30 (2)	35 (2)	40 (3)	45 (3)	45 (3)							

Series 60VM Valves

Valve Series	Operator Duty		System Pressure KSI (bar)											Maximum Pressure psi (bar)*	Stem Travel in (mm)	Flow Coefficient**
			1 to 20 (138)	25 (173)	30 (207)	35 (241)	40 (276)	45 (310)	50 (345)	55 (380)	60 (414)					
60VM4 and 60VM6	Medium Duty -C1S	Air Pressure psi (bar)	30 (2)	30 (2)	35 (2)	45 (3)	50 (4)	55 (4)	60 (4)	70 (5)	75 (5)			60,000 (4136)	.25 (6.35)	.08 (60VM4)
	Heavy Duty -C2S		15 (1)	15 (1)	20 (1)	25 (2)	25 (2)	30 (2)	30 (2)	35 (2)	40 (3)					.09 (60VM6)
60VM9	Medium Duty -C1S		35 (2)	40 (3)	50 (4)	55 (4)	65 (4)	70 (5)	75 (5)	85 (6)	90 (6)			60,000 (4136)	.25 (6.35)	0.14
	Heavy Duty -C2S		20 (1)	20 (1)	25 (1)	30 (2)	35 (2)	35 (2)	40 (3)	45 (3)	45 (3)					

Series 100VM AND 150V Valves

Valve Series	Operator Duty		System Pressure KSI (bar)											Maximum Pressure psi (bar)*	Stem Travel in (mm)	Flow Coefficient**
			1 to 40 (2760)	50 (3450)	60 (4140)	70 (4830)	80 (5520)	90 (6210)	100 (6890)	150 (10350)						
100VM4 100VM5 100VM6	Medium Duty -C1S	Air Pressure psi (bar)	50 (3)	55 (4)	65 (4)	75 (5)	85 (6)	95 (7)	100 (689)					100,000 (6900)	.12 (3)	.09
	Heavy Duty -C2S		30 (2)	30 (2)	35 (2)	40 (3)	40 (3)	45 (3)	50 (3)							
100VM9	Extra Heavy Duty (Two Stage) -HC2S		-	-	45 (3)	50 (3)	60 (4)	65 (4)	70 (5)					100,000 (6900)	.44 (11)	.65
150V5	Heavy Duty -C2S		35 (2)	40 (3)	45 (3)	45 (3)	50 (3)	55 (4)	60 (4)	100 (7)				150,000 (10350)	.12 (3)	.06

* Maximum pressure rating is based on the lowest rating of any components. Actual working pressure may be determined by tubing pressure rating, if lower.

** C_V data is for 2-way straight valves. For angle pattern add approximately 50% to the C_V value. † Maximum rating based on the valve rating.

CAUTION: While testing has shown O-rings to provide satisfactory service life, both cyclic and shelf life may vary widely with differing service conditions, properties of reactants, pressure and temperature cycling and age of the O-ring, FREQUENT INSPECTIONS SHOULD BE MADE to detect any deterioration, and O-rings replaced as required.

Tel: +45 63 12 83 00 | Email: ps@hymatik.com | www.hymatik.com | Hvidkaervej 27a, DK-5250 Odense SV, Denmark

Air Operator Sizing Data

Air To Open (Inlet Pressure Assist may be required on some options)

Series MVE Valves

Valve Series	Operator Duty		System Pressure KSI (bar)										Maximum Pressure psi (bar)*	Flow Coefficient**
			1-6 (7-41)	8 (55)	10 (69)	12 (83)	14 (97)	15 (103)						
MVE1	Mini-Light Duty -OHLP	Air Pressure psi (bar)	100 (7)	100 (47)	100 (47)	100 (47)	100 (47)	100 (7)					15,000 (1035)	.05
		Spring Pre-Compression in (mm)	.13 (3)	.13 (3)	.13 (3)	.16 (4)	.19 (5)	.20 (5)						
MVE2		Stem travel in (mm)	.16 (4)	.16 (4)	.16 (4)	.13 (3)	.10 (2)	.09 (2)						.11

Series 10V Valves

Valve Series	Operator Duty		System Pressure KSI (bar)										Maximum Pressure psi (bar)*	Flow Coefficient**
			1 to 6 (410)	8 (550)	10 (690)	12 (830)	14 (970)	15 (1035)						
10V2	Light Duty -OLP	Air Pressure psi (bar)	60 (4)	60 (4)									8,200 (565)	.12 to .09***
		Spring Pre-Compression in (mm)	.31 (8)	.38 (10)										
		Stem travel in (mm)	.12 (3)	.06 (2)										
	Medium Duty -O1S	Air Pressure psi (bar)	40 (3)	40 (3)	40 (3)	40 (3)	40 (3)	45 (3)					15,000 (1035)	.12
		Spring Pre-Compression in (mm)	.12 (3)	.12 (3)	.12 (3)	.12 (3)	.12 (3)	.16 (4)						
		Stem travel in (mm)	.12 (3)	.12 (3)	.12 (3)	.12 (3)	.12 (3)	.12 (3)						

* Maximum pressure rating is based on the lowest rating of any components. Actual working pressure may be determined by tubing pressure rating, if lower.
** C_V data is for 2-way straight valves. For angle pattern add approximately 50% to the C_V value.
*** C_V varies because of spring compression limitations. The flow coefficient range is given for the maximum stem travel (lowest system pressure) to minimum travel (highest system pressure).

To select Air-to-Open Needle Valve Actuator:

Example:
Need to know: Valve Model/Connection Size - **20SM9071 Needle Valve**
Indoor or Outdoor Service - **Indoor Service**
Maximum Operating Pressure: **Fluid - 12,000 psi**
Maximum Available Air Pressure - **60 psi**
Select Actuator Type : Air-to-Open (Normally Closed)

Example: Using chart on page 12 (Air-to-Open Actuators), select **20SM9 Section**

Across top of chart, select **12 Ksi System Pressure** (12,000 psi max system pressure)
Go down that column to **20SM9 Section** to first row filled with number (Actuator air pressure needed)
First row with number is **75 (corresponding to Heavy Duty Actuator), –** as your available **air pressure is 60 psi**, you must go down to next actuator section where it shows that the Extra HD Single Stage actuator only needs 60 psi to actuate.

This row (**- Extra HD Single Stage Actuator**) confirms that this actuator needs 60 psi to open the 20SM9 valve at 12,000 psi and as you have 60 psi available. Suffix code for this actuator can be found in this chart or on page 2 - find "Extra Heavy Duty Single Stage - Air-to-Open" - Suffix code is "**-HO1S**", remembering the Service location was "Indoor" (which is standard) - add this suffix to the 20SM9 body style of your choice. **Example: 20SM9071-HO1S**

CAUTION: While testing has shown O-rings to provide satisfactory service life, both cyclic and shelf life may vary widely with differing service conditions, properties of reactants, pressure and temperature cycling and age of the O-ring, **FREQUENT INSPECTIONS SHOULD BE MADE** to detect any deterioration, and O-rings replaced as required. *Maximum pressure rating is based on the lowest rating of any component. Actual working pressure may be determined by tubing pressure rating,if lower.

Air Operator Sizing Data

Air To Open (Inlet Pressure Assist may be required on some options)

Series SW Valves

Valve Series	Operator Duty		System Pressure KSI (bar)										Maximum Pressure psi (bar)*	Flow Coefficient**
			1 to 6 (410)	8 (550)	10 (690)	12 (830)	14 (970)	15 (1030)						
SW4	Medium Duty -O1S	Air Pressure psi (bar)	65 (4)	65 (4)	75 (5)	85 (6)	95 (7)	95 (7)					15,000 (1035)	.65*
		Spring Pre-Compression in (mm)	.19 (5)	.19 (5)	.25 (6)	.31 (8)	.36 (9)	.38 (9)						
		Stem travel in (mm)	.25 (6)	.25 (6)	.25 (6)	.25 (6)	.25 (6)	.25 (6)						
SW6	Medium Duty -O1S	Air Pressure psi (bar)	75 (5)	75 (5)	95 (7)	95 (7)	95 (7)						13,500 (931) (Spring is fully compressed)	.62 to .95 ***
		Spring Pre-Compression in (mm)	.25 (6)	.25 (6)	.28 (7)	.44 (11)	.52 (13)							
		Stem travel in (mm)	.25 (6)	.25 (6)	.25 (6)	.19 (5)	.10 (3)							
	Heav Duty -O2S	Air Pressure psi (bar)	50 (3)	55 (4)	60 (4)	65 (4)	70 (5)	75 (5)					15,000 (1035)	.95
		Spring Pre-Compression in (mm)	.14 (4)	.19 (5)	.24 (6)	.28 (7)	.34 (9)	.36 (9)						
		Stem travel in (mm)	.25 (6)	.25 (6)	.25 (6)	.25 (6)	.25 (6)	.25 (6)						
SW8	Medium Duty -O1S	Air Pressure psi (bar)	95 (7)	95 (7)									7,200 (469) (Spring is fully compressed)	1.75
		Spring Pre-Compression in (mm)	.38 (10)	.56 (14)										
		Stem travel in (mm)	.25 (6)	.05 (2)										
	Heavy Duty -O2S	Air Pressure psi (bar)	65 (4)	75 (5)	75 (5)								10,000 (690)	1.14
		Spring Pre-Compression in (mm)	.28 (7)	.38 (10)	.44 (1)									
		Stem travel in (mm)	.25 (6)	.25 (6)	.19 (5)									

* Maximum pressure rating is based on the lowest rating of any components. Actual working pressure may be determined by tubing pressure rating, if lower.

** C_V data is for 2-way straight valves. For angle pattern add approximately 50% to the C_V value.

*** C_V varies because of spring compression limitations. The flow coefficient range is given for the maximum stem travel (lowest system pressure) to minimum travel (highest system pressure).

CAUTION: While testing has shown O-rings to provide satisfactory service life, both cyclic and shelf life may vary widely with differing service conditions, properties of reactants, pressure and temperature cycling and age of the O-ring, FREQUENT INSPECTIONS SHOULD BE MADE to detect any deterioration, and O-rings replaced as required. All dimensions for reference only and subject to change. For prompt service, Parker Autoclave Engineers stocks select products. Consult your local representative.

Tel: +45 63 12 83 00 | Email: ps@hymatik.com | www.hymatik.com | Hvidkaervej 27a, DK-5250 Odense SV, Denmark

Air Operator Sizing Data

Air To Open (Inlet Pressure Assist may be required on some options)

Series 15SM Valves (replaces 10SM Valves)

Valve Series	Operator Duty		System Pressure KSI (bar) 1 to 4 (280)	6 (410)	8 (550)	10 (690)	12 (830)	14 (970)	16 (1100)	18 (1240)	Maximum Pressure psi (bar)*	Flow Coefficient**
15SM9 15QS9	Heavy Duty -O2S	Air Pressure psi (bar)	60 (4)	65 (4)	75 (5)	80 (5.5)	80 (5.5)				12,000 (830)	1.74 to .72***
		Spring Pre-Compression in (mm)	.22 (6)	.28 (7)	.35 (9)	.44 (11)	.53 (13)					
		Stem travel in (mm)	.25 (6)	.25 (6)	.25 (6)	.19 (5)	.10 (3)					
	Extra Heavy Duty Single Stage -HO1S	Air Pressure psi (bar)	45 (4)	50 (3.5)	55 (4)	65 (4.5)	70 (5)	75 (5)	80 (5.5)		15,000 (1035)	1.75
		Spring Pre-Compression in (mm)	.31 (8)	.35 (9)	.47 (12)	.59 (15)	.70 (18)	80 (25)	88 (22.5)			
		Stem travel in (mm)	.38 (10)	.38 (10)	.38 (10)	.38 (10)	.38 (10)	.38 (10)	.38 (10)			
	Extra Heavy Duty Two Stage -HO2S	Air Pressure psi (bar)	35 (2.5)	35 (2.5)	40 (3)	40 (3)	45 (3)	50 (3.5)	55 (4)		15,000 (1035)	1.75
		Spring Pre-Compression in (mm)	.16 (4)	.19 (5)	.23 (6)	.28 (7)	.35 (9)	.41 (10)	.44 (11)			
		Stem travel in (mm)	.38 (10)	.38 (10)	.38 (10)	.38 (10)	.38 (10)	.38 (10)	.38 (10)			
15SM12 15QS12	Extra Heavy Duty Single Stage -HO1S	Air Pressure psi (bar)	55 (4)	65 (5)	80 (6)	95 (7)	100 (7)				12,000 (830)	2.80
		Spring Pre-Compression in (mm)	.44 (11)	.63 (16)	.84 (21)	1.06 (27)	1.25 (32)					
		Stem travel in (mm)	.44 (11)	.44 (11)	.44 (11)	.44 (11)	.32 (8)					
	Extra Heavy Duty Two Stage -HO2S	Air Pressure psi (bar)	40 (3)	50 (4)	55 (4)	60 (4)	70 (5)	75 (5)	75 (5)		15,000 (1035)	2.80
		Spring Pre-Compression in (mm)	.22 (6)	.31 (8)	.44 (11)	.63 (16)	.63 (16)	.74 (19)	.80 (20)			
		Stem travel in (mm)	.44 (11)	.44 (11)	.44 (11)	.44 (11)	.44 (11)	.44 (11)	.40 (10)			
15SM16 15QS16	Extra Heavy Duty Single Stage -HO1S	Air Pressure psi (bar)	75 (5)	100 (7)							6,500 (448) (Spring is fully compressed)	5.20
		Spring Pre-Compression in (mm)	.69 (18	1.13 (29)								
		Stem travel in (mm)	.50 (13)	.50 (13)								
	Extra Heavy Duty Two Stage -HO2S	Air Pressure psi (bar)	55 (4)	65 (4)	75 (5)	85 (6)					10,000 (689) (Spring is fully compressed)	5.20
		Spring Pre-Compression in (mm)	.34 (9)	.53 (13)	.69 (18)	.88 (22)						
		Stem travel in (mm)	.50 (13)	.50 (13)	.50 (13)	.50 (13)						
15SM24	Extra Heavy Duty Two Stage -HO2S	Air Pressure psi (bar)	65 (2)	85 (6)	90 (6)	100 (7)					9,000 (621)	14
		Spring Pre-Compression in (mm)	.60 (15)	.89 (22.5)	1.19 (30)	1.34 (34)						
		Stem travel in (mm)	.44 (11)	.44 (11)	.25 (6)	.25 (6)						

* Maximum pressure rating is based on the lowest rating of any components. Actual working pressure may be determined by tubing pressure rating, if lower.

** C_V data is for 2-way straight valves. For angle pattern add approximately 50% to the C_V value.

*** C_V varies because of spring compression limitations. The flow coefficient range is given for the maximum stem travel (lowest system pressure) to minimum travel (highest system pressure).

CAUTION: While testing has shown O-rings to provide satisfactory service life, both cyclic and shelf life may vary widely with differing service conditions, properties of reactants, pressure and temperature cycling and age of the O-ring, FREQUENT INSPECTIONS SHOULD BE MADE to detect any deterioration, and O-rings replaced as required. All dimensions for reference only and subject to change. For prompt service, Parker Autoclave Engineers stocks select products. Consult your local representative.

Air Operator Sizing Data

Air To Open (Inlet Pressure Assist may be required on some options)

Series 20SM Valves

Valve Series	Operator Duty		System Pressure KSI (bar)									Maximum Pressure psi (bar)*	Flow Coefficient**
			1-4 (280)	6 (410)	8 (550)	10 (690)	12 (830)	14 (970)	16 (1100)	18 (1240)	20 (1380)		
20SM4 15P4† 15QS4	Medium Duty -O1S	Air Pressure psi (bar)	65 (4)	65 (4)	65 (4)	75 (5)	85 (6)	95 (7)	95 (7)	95 (7)	95 (7)	20,000 (1380)	.31 to .22***
		Spring Pre-Compression in (mm)	.19 (5)	.19 (5)	.19 (5)	.25 (6)	.31 (8)	.38 (10)	.44 (11)	.50 (13)	.56 (14)		
		Stem travel in (mm)	.25 (6)	.25 (6)	.25 (6)	.25 (6)	.25 (6)	.25 (6)	.19 (5)	.12 (3)	.06 (2)		
	Heavy Duty -O2S	Air Pressure psi (bar)	35 (3)	35 (3)	35 (3)	40 (3)	45 (3)	50 (3)	50 (3)	50 (3	50 (3		
20SM6 15P6† 15QS6	Medium Duty -O1S	Air Pressure psi (bar)	65 (4)	65 (4)	75 (5)	85 (6)	95 (7)	95 (7)	95 (7)	95 (7)		18,250 (1258) (Spring is fully compressed)	.75 to .57***
		Spring Pre-Compression in (mm)	.19 (5)	.19 (5)	.25 (6)	.31 (8)	.38 (10)	.44 (11)	.50 (13)	.56 (14)			
		Stem travel in (mm)	.25 (6)	.25 (6)	.25 (6)	.25 (6)	.25 (6)	.19 (5)	.12 (3)	.06 (2)			
	Heavy Duty -O2S	Air Pressure psi (bar)	35 (2)	35 (2)	40 (3)	45 (3)	50 (3)	50 (3)	50 (3)	50 (3)			
20SM9 15P8†	Medium Duty -O1S	Air Pressure psi (bar)	85 (6)	90 (6)	95 (7)	95 (7)						9,800 (676) (Spring is fully compressed)	1.29 to .53***
		Spring Pre-Compression in (mm)	.31 (8)	.34 (9)	.47 (12)	.56 (14)							
		Stem travel in (mm)	.25 (6)	.25 (6)	.15 (4)	.06 (2)							
	Heavy Duty -O2S	Air Pressure psi (bar)	50 (6)	55 (4)	65 (4)	70 (5)	75 (5)	75 (5)	75 (5)			15,700 (1082) (Spring is fully compressed)	1.29 to .53***
		Spring Pre-Compression in (mm)	.19 (5)	.22 (6)	.28 (7)	.34 (9)	.44 (11)	.50 (13)	.56 (14)				
		Stem travel in (mm)	.25 (6)	.25 (6)	.25 (6)	.25 (6)	.19 (5)	.12 (3)	.06 (2)				
	Extra Heavy Duty Single Stage -HO1S	Air Pressure psi (bar)	40 (3)	40 (3)	50 (3)	55 (4)	60 (4)	65 (4)	70 (5)	75 (5)	85 (6)	20,000 (1379)	1.30
		Spring Pre-Compression in (mm)	.25 (6)	.28 (7)	.38 (10)	.47 (12)	.56 (14)	.66 (17)	.75 (19)	.84 (21)	.94 (24)		
		Stem travel in (mm)	.38 (10)	.38 (10)	.38 (10)	.38 (10)	.38 (10)	.38 (10)	.38 (10)	.38 (10)	.38 (10)		
	Extra Heavy Duty Two Stage -HO2S	Air Pressure psi (bar)	30 (2)	35 (2)	35 (2)	40 (3)	40 (3)	45 (3)	50 (3)	50 (3)	55 (4)	20,000 (1379)	1.30
		Spring Pre-Compression in (mm)	.13 (3)	.16 (4)	.19 (5)	.25 (6)	.28 (7)	.34 (9)	.38 (10)	.44 (11)	.47 (12)		
		Stem travel in (mm)	.38 (10)	.38 (10)	.38 (10)	.38 (10)	.38 (10)	.38 (10)	.38 (10)	.38 (10)	.38 (10)		

* Maximum pressure rating is based on the lowest rating of any components. Actual working pressure may be determined by tubing pressure rating, if lower.

** C_V data is for 2-way straight valves. For angle pattern add approximately 50% to the C_V value.

*** C_V varies because of spring compression limitations. The flow coefficient range is given for the maximum stem travel (lowest system pressure) to minimum travel (highest system pressure).

CAUTION: While testing has shown O-rings to provide satisfactory service life, both cyclic and shelf life may vary widely with differing service conditions, properties of reactants, pressure and temperature cycling and age of the O-ring, FREQUENT INSPECTIONS SHOULD BE MADE to detect any deterioration, and O-rings replaced as required. All dimensions for reference only and subject to change. For prompt service, Parker Autoclave Engineers stocks select products. Consult your local representative.

Tel: +45 63 12 83 00 | Email: ps@hymatik.com | www.hymatik.com | Hvidkaervej 27a, DK-5250 Odense SV, Denmark

Air Operator Sizing Data

Air To Open (Inlet Pressure Assist may be required on some options)

Series 20SM Valves

Valve Series	Operator Duty		System Pressure KSI (bar)									Maximum Pressure psi (bar)*	Flow Coefficient**
			1-4 (280)	6 (410)	8 (550)	10 (690)	12 (830)	14 (970)	16 (1100)	18 (1240)	20 (1380)		
20SM12 10P12†	Heavy Duty -O2S	Air Pressure psi (bar)	65 (4)	75 (5)								6,000 (414) (Spring is fully compressed)	.80 to .78***
		Spring Pre-Compression in (mm)	.28 (7)	.38 (10)									
		Stem travel in (mm)	.25 (6)	.25 (6)									
	Extra Heavy Duty Single Stage -HO1S	Air Pressure psi (bar)	50 (3)	60 (4)	70 (5)	80 (6)	90 (6)	100 (7)	100 (7)			15,000 (1034) (Spring is fully compressed)	2.50
		Spring Pre-Compression in (mm)	.38 (10)	.50 (13)	.66 (17)	.81 (21)	.97 (25)	1.13 (29)	1.22 (31)				
		Stem travel in (mm)	.44 (11)	.44 (11)	.44 (11	.44 (11	.44 (11	.44 (11	.44 (11	.06 (2)			
	Extra Heavy Duty Two Stage -HO2S	Air Pressure psi (bar)	40 (3)	45 (3)	50 (3)	55 (4)	60 (4)	65 (5)	70 (5)	75 (5)	80 (6)	20,000 (1379)	2.50
		Spring Pre-Compression in (mm)	.19 (5)	.25 (6)	.31 (8)	.41 (10)	.50 (13)	.56 (14)	.66 (17)	.72 (18)	.81 (21)		
		Stem travel in (mm)	.44 (11)	.44 (11)	.44 (11)	.44 (11)	.44 (11)	.44 (11)	.44 (11)	.44 (11)	.44 (11)		
20SM16 10P16	Extra Heavy Duty Single Stage -HO1S	Air Pressure psi (bar)	65 (4)	80 (6)	95 (7)	100 (7)						11,000 (760) (Spring is fully compressed)	2.50
		Spring Pre-Compression in (mm)	.50 (13)	.75 (19)	.97 (25)	1.22 (31)							
		Stem travel in (mm)	.50 (13)	.50 (13)	.50 (13)	.50 (13)							
	Extra Heavy Duty Two Stage -HO2S	Air Pressure psi (bar)	50 (3)	55 (4)	65 (4)	70 (5)	80 (6)	85 (6)	90 (6)	100 (7)	100 (7)	20,000 (1379)	2.50
		Spring Pre-Compression in (mm)	.25 (6)	.38 (10)	.50 (13)	.63 (16)	.75 (19)	.84 (21)	.97 (25)	1.09 (28)	1.22 (31)		
		Stem travel in (mm)	.50 (13)	.50 (13)	.50 (13)	.50 (13)	.50 (13)	.50 (13)	.50 (13)	.50 (13)	.50 (13)		

* Maximum pressure rating is based on the lowest rating of any components. Actual working pressure may be determined by tubing pressure rating, if lower.

** C_V data is for 2-way straight valves. For angle pattern add approximately 50% to the C_V value.

*** C_V varies because of spring compression limitations. The flow coefficient range is given for the maximum stem travel (lowest system pressure) to minimum travel (highest system pressure).

CAUTION: While testing has shown O-rings to provide satisfactory service life, both cyclic and shelf life may vary widely with differing service conditions, properties of reactants, pressure and temperature cycling and age of the O-ring, FREQUENT INSPECTIONS SHOULD BE MADE to detect any deterioration, and O-rings replaced as required. All dimensions for reference only and subject to change. For prompt service, Parker Autoclave Engineers stocks select products. Consult your local representative.

Air Operator Sizing Data

Air To Open (Inlet Pressure Assist may be required on some options)

Series 30SC/43SC Valves

Valve Series	Operator Duty		System Pressure KSI (bar)											Maximum Pressure psi (bar)*	Flow to 15
			1 to 15 (1035)	16 (1100)	18 (1240)	20 (1380)	22 (1520)	24 (1650)	26 (1790)	28 (1930)	30 (2060)	35 (2410)	40 (2760)		
30SC16	Extra Heavy Duty Two Stage -HO2S	Air Pressure psi (bar)	70 (5)	75 (5)	75 (5)	80 (6)	85 (6)	95 (7)	100 (7)	100 (7)	100 (7)			30,000 (2068)	2.61
		Spring Pre-Compression in (mm)	.56 (14)	.62 (16)	.68 (17)	.75 (19)	.88 (22)	.94 (24)	1.00 (25)	1.06 (27)	1.38 (35)				
		Stem travel in (mm)	.50 (13)	.50 (13)	.50 (13)	.50 (13)	.50 (13)	.50 (13)	.50 (13)	.50 (13)	.50 (13)				
43SC16 (see note)	Extra Heavy Duty Two Stage -HO2S	Air Pressure psi (bar)	35 (2)	35 (2)	40 (3)	45 (3)	50 (3)	55 (4)	60 (4)	60 (47)	65 (4)	80 (6)	100 (7)	40,000* (2758)	2.61
		Spring Pre-Compression in (mm)	.55 (14)	.55 (14)	.63 (16)	.71 (18)	.79 (20)	.86 (22)	.94 (24)	.94 (24)	1.02 (26)	1.26 (32)	1.38 (35)		
		Stem travel in (mm)	.31 (8)	.31 (8)	.31 (8)	.31 (8)	.31 (8)	.31 (8)	.31 (8)	.31 (8)	.31 (8)	.31 (8)	.31 (8)		

Note: * Maximum pressure with actuator 40,000 psi use actuators -HO2S.4 (valve orifice .406" diameter)

Series 30VM Valves

Valve Series	Operator Duty		System Pressure KSI (bar)											Maximum Pressure psi (bar)*	Flow Coefficient**
			1 to10 (690)	12 (830)	14 (970)	16 (1100)	18 (1240)	20 (1380)	22 (1520)	24 (1650)	26 (1790)	28 (1930)	30 (2060)		
30VM4	Medium Duty -O1S	Air Pressure psi (bar)	45 (3)	45 (3)	55 (4)	55 (4)	55 (4)	55 (4)	65 (5)	65 (5)	65 (5)	65 (5)	75 (5)	30,000 (2068)	.12
		Spring Pre-Compression in (mm)	.12 (3)	.12 (3)	.19 (5)	.19 (5)	.19 (5)	.19 (5)	.25 (6)	.25 (6)	.25 (6)	.25 (6)	.31 (8)		
		Stem travel in (mm)	.19 (5)	.19 (5)	.19 (5)	.19 (5)	.19 (5)	.19 (5)	.19 (5)	.19 (5)	.19 (5)	.19 (5)	.19 (5)		
	Heavy Duty -O2S	Air Pressure psi (bar)	25 (2)	25 (2)	30 (2)	30 (2)	30 (2)	30 (2)	35 (2)	35 (2)	35 (2)	35 (2)	40 (3)		
30VM6 and 30VM9	Medium Duty -O1S	Air Pressure psi (bar)	45 (3)	55 (4)	55 (4)	65 (5)	65 (5)	75 (5)	75 (5)	75 (5)	85 (6)	85 (6)	95 (7)	30,000 (2068)	.33 (30VM6)
		Spring Pre-Compression in (mm)	.12 (3)	.19 (5)	.19 (5)	.25 (6)	.25 (6)	.31 (8)	.31 (8)	.31 (8)	.38 (10)	.38 (10)	.44 (11)		
		Stem travel in (mm)	.19 (5)	.19 (5)	.19 (5)	.19 (5)	.19 (5)	.19 (5)	.19 (5)	.19 (5)	.19 (5)	.19 (5)	.19 (5)		.33 (30VM9)
	Heavy Duty -O2S	Air Pressure psi (bar)	25 (2)	30 (2)	30 (2)	35 (2)	35 (2)	40 (3)	40 (3)	40 (3)	45 (3)	45 (3)	50 (3)		

Tel: +45 63 12 83 00 | Email: ps@hymatik.com | www.hymatik.com | Hvidkaervej 27a, DK-5250 Odense SV, Denmark

Air Operator Sizing Data

Air To Open (Inlet Pressure Assist may be required on some options)

Series 40VM Valves

Valve Series	Operator Duty		System Pressure KSI (bar)										Maximum Pressure psi (bar)*	Flow Coefficient**
			1 to 10 (690)	15 (1030)	20 (1380)	25 (1720)	30 (2070)	35 (2410)	40 (2760)					
40VM9	Medium Duty -O1S	Air Pressure psi (bar)	60 (4)	70 (5)	75 (5)	85 (6)	95 (7)	100 (7)	100 (7)				40,000 (2758)	.28
		Spring Pre-Compression in (mm)	.12 (3)	.18 (5)	.25 (6)	.31 (8)	.38 (10)	.43 (11)	.5 (13)					
		Stem travel in (mm)	.25 (6)	.25 (6)	.25 (6)	.25 (6)	.25 (6)	.25 (6)	.25 (6)					
	Heavy Duty -O2S	Air Pressure psi (bar)	30 (2)	35 (2)	40 (3)	45 (3)	50 (3)	50 (3)	55 (4)					

Series 60VM Valves

Valve Series	Operator Duty		System Pressure KSI (bar)										Maximum Pressure psi (bar)*	Flow Coefficient**
			1 to 15 (1030)	20 (1380)	25 (1720)	30 (2070)	35 (2410)	40 (2760)	45 (3100)	50 (3450)	55 (3790)	60 (4140)		
60VM4 and 60VM6	Medium Duty -O1S	Air Pressure psi (bar)	55 (4)	65 (5)	65 (5)	65 (5)	75 (5)	75 (5)	85 (6)	85 (6)	85 (6)	95 (7)	60,000 (2758)	.08 (60VM4)
		Spring Pre-Compression in (mm)	.12 (3)	.19 (5)	.19 (5)	.19 (5)	.25 (6)	.25 (6)	.31 (8)	.31 (8)	.31 (8))	.38 (10)		
		Stem travel in (mm)	.25 (6)	.25 (6)	.25 (6)	.25 (6)	.25 (6)	.25 (6)	.25 (6)	.25 (6)	.25 (6)	.25 (6)		
	Heavy Duty -O2S	Air Pressure psi (bar)	30 (2)	35 (2)	35 (2)	35 (2)	40 (3)	40 (3)	45 (4)	45 (4)	45 (4)	50 (3)		.09 (60VM6)
60VM9	Medium Duty -O1S	Air Pressure psi (bar)	55 (4)	65 (5)	65 (5)	75 (6)	75 (5)	85 (6)	95 (7)	95 (7)	95 (7)	95 (7)	60,000 (2758)	.14
		Spring Pre-Compression in (mm)	.12 (3)	.19 (5)	.19 (5)	.25 (6)	.25 (6)	.31 (8)	.38 (10)	.38 (10)	.44 (11)	.50 (13)		
		Stem travel in (mm)	.25 (6)	.25 (6)	.25 (6)	.25 (6)	.25 (6)	.25 (6)	.25 (6)	.25 (6)	.19 (5)	.12 (3)		
	Heavy Duty -O2S	Air Pressure psi (bar)	30 (2)	35 (2)	35 (2)	40 (3)	40 (3)	45 (4)	50 (3)	50 (3)	50 (3)	50 (3)		

* Maximum pressure rating is based on the lowest rating of any components. Actual working pressure may be determined by tubing pressure rating, if lower.

** C_V data is for 2-way straight valves. For angle pattern add approximately 50% to the C_V value.

*** C_V varies because of spring compression limitations. The flow coefficient range is given for the maximum stem travel (lowest system pressure) to minimum travel (highest system pressure).

CAUTION: While testing has shown O-rings to provide satisfactory service life, both cyclic and shelf life may vary widely with differing service conditions, properties of reactants, pressure and temperature cycling and age of the O-ring, FREQUENT INSPECTIONS SHOULD BE MADE to detect any deterioration, and O-rings replaced as required. All dimensions for reference only and subject to change. For prompt service, Parker Autoclave Engineers stocks select products. Consult your local representative.

Air Operator Sizing Data

Air To Open (Inlet Pressure Assist may be required on some options)

Series 100VM and 150V Valves

Valve Series	Operator Duty		System Pressure KSI (bar)											Maximum Pressure psi (bar)*	Flow Coefficient**
			1 to 20 (1380)	40 (2760)	60 (4140)	80 (5520)	90 (6210)	100 (6900)	125 (8620)	150 (10350)					
100VM4 100VM5 100VM6	Heavy Duty -O2S	Air Pressure psi (bar)	35 (2)	40 (3)	50 (3)	60 (4)	70 (5)	70 (5)						100,000 (6900)	.09 to .07***
		Spring Pre-Compression in (mm)	.12 (3)	.19 (5)	.25 (6)	.31 (8)	.38 (10)	.38 (10)							
		Stem travel in (mm)	.12 (3)	.12 (3)	.12 (3)	.12 (3)	.12 (3)	.12 (3)							
100VM9	Extra Heavy Duty 2 Stage -HO2S	Air Pressure psi (bar)			70 (5)	85 (6)	90 (6)	100 (7)						100,000 (6900)	.65
		Spring Pre-Compression in (mm)			.68 (17)	.90 (23)	1.0 (25)	1.12 (28)							
		Stem travel in (mm)			.44 (11)	.44 (11)	.44 (11)	.44 (11))							
150V5	Heavy Duty -O2S	Air Pressure psi (bar)	30 (2)	40 (3)	45 (3)	55 (4)	60 (4)	60 (4)	70 (5)	75 (5)				150,000 (10350)	.06
		Spring Pre-Compression in (mm)	.12 (3)	.19 (5)	.25 (6)	.31 (8)	.38 (10)	.38 (10)	.44 (11)	.56 (14)					
		Stem travel in (mm)	.12 (3)	.12 (3)	.12 (3)	.12 (3)	.12 (3)	.12 (3)	.12 (3)	.06 (2)					

* Maximum pressure rating is based on the lowest rating of any components. Actual working pressure may be determined by tubing pressure rating, if lower.

** C_V data is for 2-way straight valves. For angle pattern add approximately 50% to the C_V value.

*** C_V varies because of spring compression limitations. The flow coefficient range is given for the maximum stem travel (lowest system pressure) to minimum travel (highest system pressure).

CAUTION: While testing has shown O-rings to provide satisfactory service life, both cyclic and shelf life may vary widely with differing service conditions, properties of reactants, pressure and temperature cycling and age of the O-ring, FREQUENT INSPECTIONS SHOULD BE MADE to detect any deterioration, and O-rings replaced as required. All dimensions for reference only and subject to change. For prompt service, Parker Autoclave Engineers stocks select products. Consult your local representative.

Tel: +45 63 12 83 00 | Email: ps@hymatik.com | www.hymatik.com | Hvidkaervej 27a, DK-5250 Odense SV, Denmark

Actuator: Yoke Mounting Dimensions

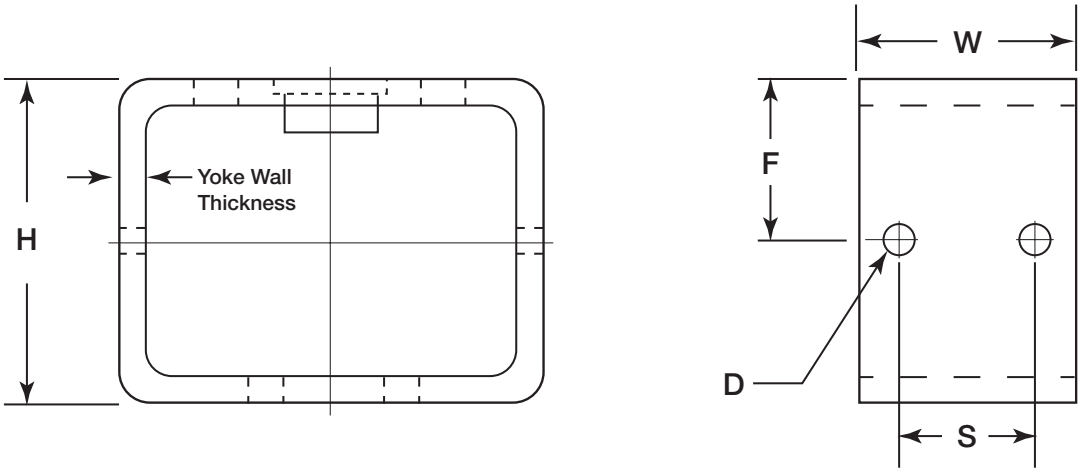

Actuator Group	System Pressure KSI (bar)					
O1S, C1S, O2S, C2S	D (Diameter)	H	W	F	S	Yoke Wall Thickness
10V2	.281 (7.1)	3.0 (76)	1.63 (41)	1.50 (38)	1.125 (29)	3/8"
SW4/6, 20SM4/6	.281 (7.1)	3.0 (76)	2.0 (51)	1.50 (38)	1.125 (29)	3/8"
15/20SM9, SW8	.281 (7.1)	3.0 (76)	2.0 (51)	1.50 (38)	1.125 (29)	3/8"
15/20SM12	.281 (7.1)	4.0 (102)	2.13 (54)	1.50 (38)	1.125 (29)	3/8"
20SM16	.281 (7.1)	4.0 (102)	2.13 (54)	1.50 (38)	1.125 (29)	3/8"
30/40/60VM	.281 (7.1)	3.0 (76)	2.0 (51)	1.50 (38)	1.125 (29)	3/8"
100VM4/6	.281 (7.1)	3.0 (76)	2.0 (51)	1.50 (38)	1.125 (29)	3/8"
HO1S, HC1S, HO2S, HC2S	D (Diameter)	H	W	F	S	Yoke Wall Thickness
20SM9/12/16	.516 (13.1)	3.94 (100)	3.0 (76)	1.97 (50)	1.50 (38)	1/2"
15SM16/24	.516 (13.1)	3.94 (100)	3.0 (76)	1.97 (50)	1.50 (38)	1/2"
30/43SC	.516 (13.1)	3.94 (100)	3.0 (76)	1.97 (50)	1.50 (38)	1/2"
100VM9	.516 (13.1)	3.94 (100)	3.0 (76)	1.97 (50)	1.50 (38)	1/2"
OLP/CLP	D (Diameter)	H	W	F	S	Yoke Wall Thickness
10V2	.219 (5.6)	2.5 (64)	1.0 (25)	1.25 (32)	.562 (14)	3/16"

Tel: +45 63 12 83 00 | Email: ps@hymatik.com | www.hymatik.com | Hvidkaervej 27a, DK-5250 Odense SV, Denmark

Needle Valve Actuators

Model FRC - Electric, 24 VDC Flow Regulating Control/Shutoff

10V2, SW, SM, VM Series
Needle Valves to 60,000 psi (4140 bar)



Principle of Operation:

The need to remotely control process flow electrically using high pressure multi-turn needle valves has long been sought. Pneumatic control of this type is an engineering challenge and cost prohibitive. Parker Autoclave Engineers solves these issues with our FRC line of electric actuators. When mated to our Regulating Stem Needle Valves and sent a 4-20mA signal, this actuated valve system provides precise control when needed and even provides enough torque to close the valve when not needed. This valve/actuator combination is capable of controlling Liquid or Gas flows.

The FRC Electric Actuator uses a 4-20mA input signal to turn the valve a programed amount of turns from fully closed to fully open (typically 5 turns) while also providing a position feedback using an independent 4-20mA signal. It is also capable of closing the valve completely when a 4mA signal is received. Should power be lost, the valve will freeze and “remember” it’s last position and will not need to be re-zeroed. The FRC actuator is designed to work with a number of Parker Autoclave Engineers Needle Valves from 1/8" to 3/4" tube sizes and up to 60,000 psi (4140 bar) using the Regulating Stem option - see individual valve brochures for Cv and Flow Curves.

Features:

- Designed for Multi-turn Needle Valves, tubing/pipe sizes 1/8" to 3/4"
- Precise, accurate control using Regulating Stem option.
- Operational Temperature Range: -40° to 160°F (-40° to 70°C) - Valve temperature not to exceed 600°F
- Closing Torque capable of up to 60,000 psi (4140 bar) operation
- Weatherproof or Explosionproof (CSA approved Cls 1, Div 1 Grps B, C & D)
- Maximum Rotation Speed: FRC1 = 4 sec/turn, FRC2 = 15 sec/turn (5 turn open/close)
- Weatherproof Enclosure is supplied with TURCK 5 position cable connector and 20’ of cable

ENGINEERING YOUR SUCCESS.

Specifications and Ordering Guide:

Electric Actuator

Electrical Specifications:

- Electrical Input: 24VDC only, 72 Watt maximum
- Control Input: 4-20mA
- Position Feedback: Independent 4-20mA
- Position Detection: Hall Sensors
- Motor: BLDC brushless DC motor

Position on Powerloss:

- Remembers Last Position
- Reseats Valve if Current is Between 3.0 and 4.16mA

Mechanical Specifications:

- Standard Enclosure - EPD Coated NEMA 4/IP65 Equivalent
- Optional Anodized Aluminum Explosion-Proof Enclosure, Nema 8/IP67, CSA Approved for Class 1, Division 1, Groups B, C, D / T6 Areas
- 500+ Positions per turn (+/- 0.25° Position Accuracy), 3243 Actuator Positions over Full Span
- Maximum Rotation Speed: #1 Actuator = 4 sec/turn (5 turn open/close), #2 Actuator (high torque) = 15 sec/turn (5 turn open/close)
- Actuator Operating Temperature -40°(-40°C) to160°F(70°C), Valve Temperature not to exceed 600°F
- Actuator life Expectancy: 250,000 cycles
- Gears and Bearings are Lifetime Lubricated
- 20 ft. cable included with 6 pin/5 wire connector (FRC1 and FRC2 Weatherproof version only)
- Wiring Terminal, Maximum Wire Size: 18 Gauge
  (To Terminate larger gauge wire, see Option Code XPFL below)

Ordering Guide: (reference individual Valve Series brochure for exact valve detail)

Example Part Number:	**20SM**	**9**	**8**	**8**	**2**	–	**FRC2X**	**TG**
Ordering Parameters/Options:	Valve Series	Tube/Pipe Size (OD)	Seat	Stem Type	Body Pattern		Electric Flow Regulating Actuator	Valve Optionsr
Table Reference: (see below)	A	B	C	D	E		F	G

20SM9882-FRC2XTG = 20SM Series Needle Valve, 20,000 psi MAWP, 9/16" MP Cone and Thread, 2-way Angle/Replaceable Seat Valve, Flow Regulating On/Off Explosion Proof Actuator/High Torque, PTFE Glass packing to 600°F max.

A - Valve Series
10V2 , SW, 10/15P, 15/**20SM**, 30VM, 60VM

B - Tube/Pipe Size (limited to sizes shown below)	
2	1/8" (10V2 Series only)
4	1/4"
6	3/8"
8	1/2" (SW and P Series Valves Only)
9	9/16" (SM and VM Series Valves Only)
12	3/4" (P and SM Series Valves Only)

C - Seat: STD/Replaceable Type	
0	STD
8	Replaceable (Body Pattern 2 Only)

D - Stem Type	
8	Regulating

E - Body Pattern (see individual valve brochure for details)	
1	Straight
2	Angle
3	3-Way, 2 On-Pressure
4	3-Way, 1 On-Pressure

F - Electric Flow Regulating Actuator	
FRC1	Low Torque Valves - Indoor/Weather-Proof w/20ft cable
FRC2	High Torque Valves - Indoor/Weather-Proof w/20ft cable (SW8 15P8 10P12 15SM9&12 20SM9&12 Valve Sizes)
FRC1X	Low Torque Valves - Explosion-Proof: Div. 1, Class 1, Groups B, C, and D
FRC2X	High Torque Valves - Explosion-Proof: Div. 1, Class 1, Groups B, C, and D (SW8 15P8 10P12 15SM9&12 20SM9&12 Valve Sizes)

G - Valve Options: (600°F Maximum Valve Temperature)	
TG	PTFE Glass Packing to 600°F
B	Cryogenic 0 to -100°F
CSS	Coated Stem and Seat
K	Anti-Vibration Glands
SOG	NACE Approved Materials
XPFL	Pre-wired Flying Leads inside 1/2" NPT Class 1, Div 1 Groups B, C&D enclosure mounted outside actuator to splice wire gauges over size 18 for Class 1, Div 1 Groups B, C& D areas to terminate larger gauge wire "outside" enclosure.
Many other options available - see individual Valve Series Catalog or contact Factory.	

Note: Actuators can be rotated to any one of four compass locations. (requires zeroing function (re-seating).

Tel: +45 63 12 83 00 | Email: ps@hymatik.com | www.hymatik.com | Hvidkaervej 27a, DK-5250 Odense SV, Denmark

Dimensional information:

Electric Actuator: FRC1

Dimensional Information:

Valve Series	Dimensions: inches (mm)			
	A	B	C	D
1/4" & 3/8" NPT - P Series 1/8", 1/4" & 3/8" Low Pressure - 10V/SW Series 1/4" & 3/8" Medium Pressure - 20SM Series 1/4", 3/8" & 9/16" High Pressure - 30VM/60VM Series	3.87 (98)	3.98 (101.2)	3.00 (76.12)	2.80 (71)

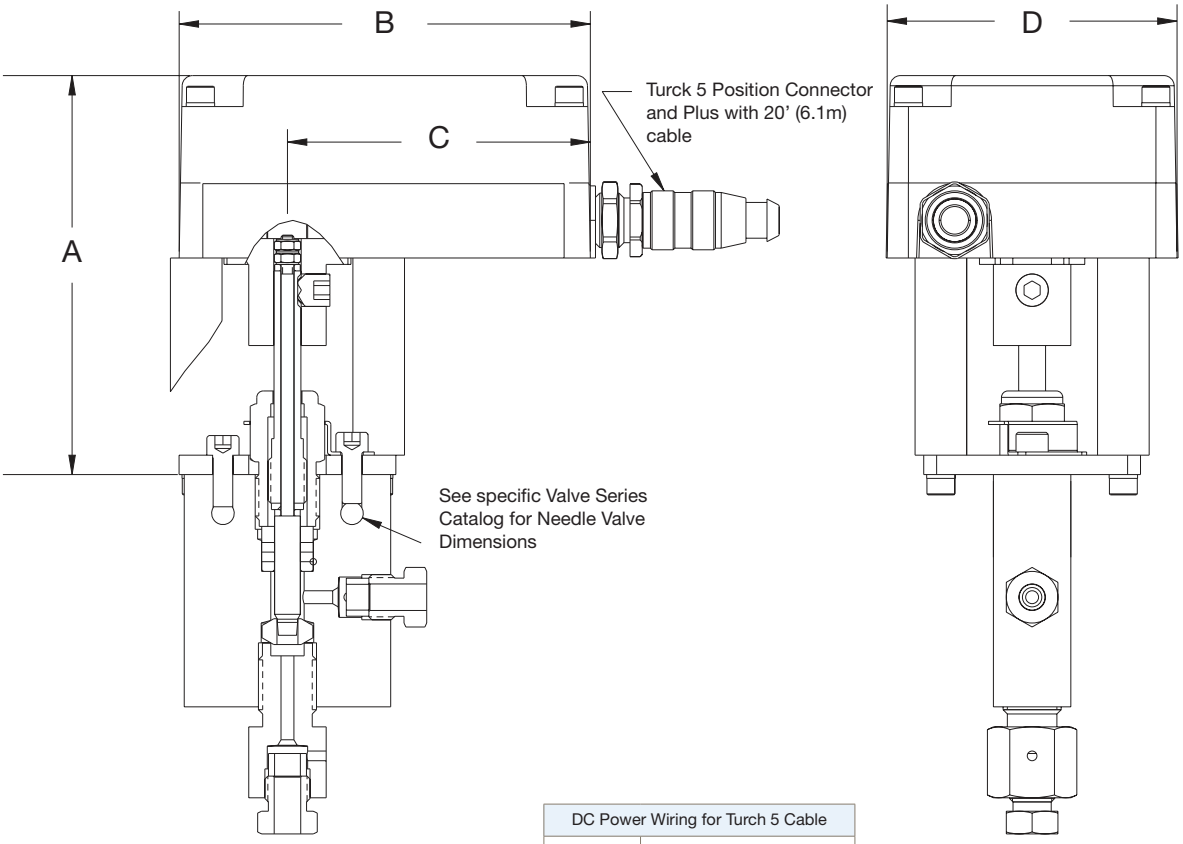

Basic Repair Kits
For **Valves** - See specific Manual Valve brochure for valve repair parts and Manual Needle Valve IOM manual for instructions.
For **FRC1 Actuator** - Replace entire Actuator using Part Number AE002865
For **FRC1 Mounting Kit**: Part Number AE002867

DC Power Wiring for Turch 5 Cable	
White	+24 VDC (72 Watt Max)
Black	Power Ground
Grey	Output Signal (4-20 mA)
Brown	Input Signal Ground
Blue	+Input Signal (4-20 mA)
Warning: Do not connect terminal 3 (Grey wire) directly or through a Multimeter, to ground. A sensing resistor of 50 ohms or more needs to be present or damage will occur.	

Tel: +45 63 12 83 00 | Email: ps@hymatik.com | www.hymatik.com | Hvidkaervej 27a, DK-5250 Odense SV, Denmark

Dimensional information:

Electric Actuator: FRC2

Dimensional Information:

Valve Series	Dimensions: inches (mm)			
	A	B	C	D
1/2" & 3/4" NPT - P Series 1/2" Low Pressure - SW Series 9/16" & 3/4" SM Series Medium Pressure	5.47 (139)	4.02 (102.0)	1.52 (39)	2.88 (73)

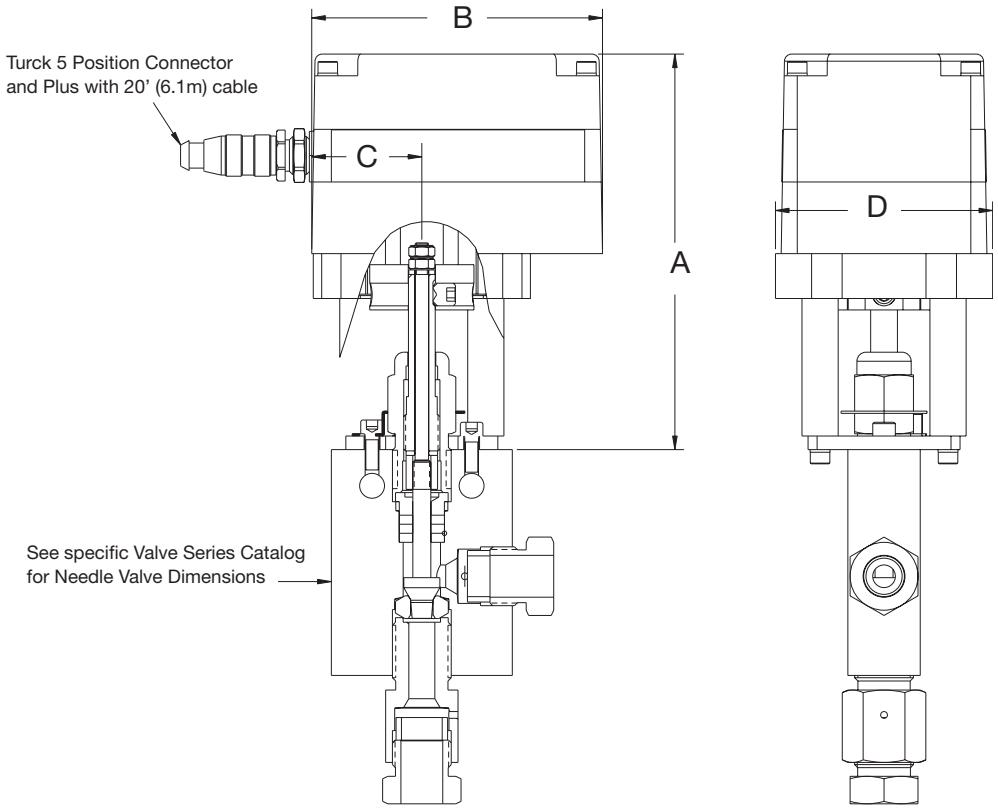

Basic Repair Kits
For **Valves** - See specific Manual Valve brochure for valve repair parts and Manual Needle Valve IOM manual for instructions. For **FRC2 Actuator** - Replace entire Actuator using Part Number AE002865 For **FRC2 Gear Reduction/Mounting Kit**: Part Number AE002868

DC Power Wiring for Turch 5 Cable	
White	+24 VDC (72 Watt Max)
Black	Power Ground
Grey	Output Signal (4-20 mA)
Brown	Input Signal Ground
Blue	+Input Signal (4-20 mA)
Warning: Do not connect terminal 3 (Grey wire) directly or through a Multimeter, to ground. A sensing resistor of 50 ohms or more needs to be present or damage will occur.	

Tel: +45 63 12 83 00 | Email: ps@hymatik.com | www.hymatik.com | Hvidkaervej 27a, DK-5250 Odense SV, Denmark

Dimensional information:

Electric Actuator: FRC1X

Dimensional Information:

Valve Series	Dimensions: inches (mm)		
	A	B	C
1/4" & 3/8" NPT - P Series 1/8", 1/4" & 3/8" Low Pressure - 10V/SW Series 1/4" & 3/8" Medium Pressure - 20SM Series 1/4", 3/8" & 9/16" High Pressure - 30VM/60VM Series	3.67 (93.2)	4.25 (108)	3.00 (76)

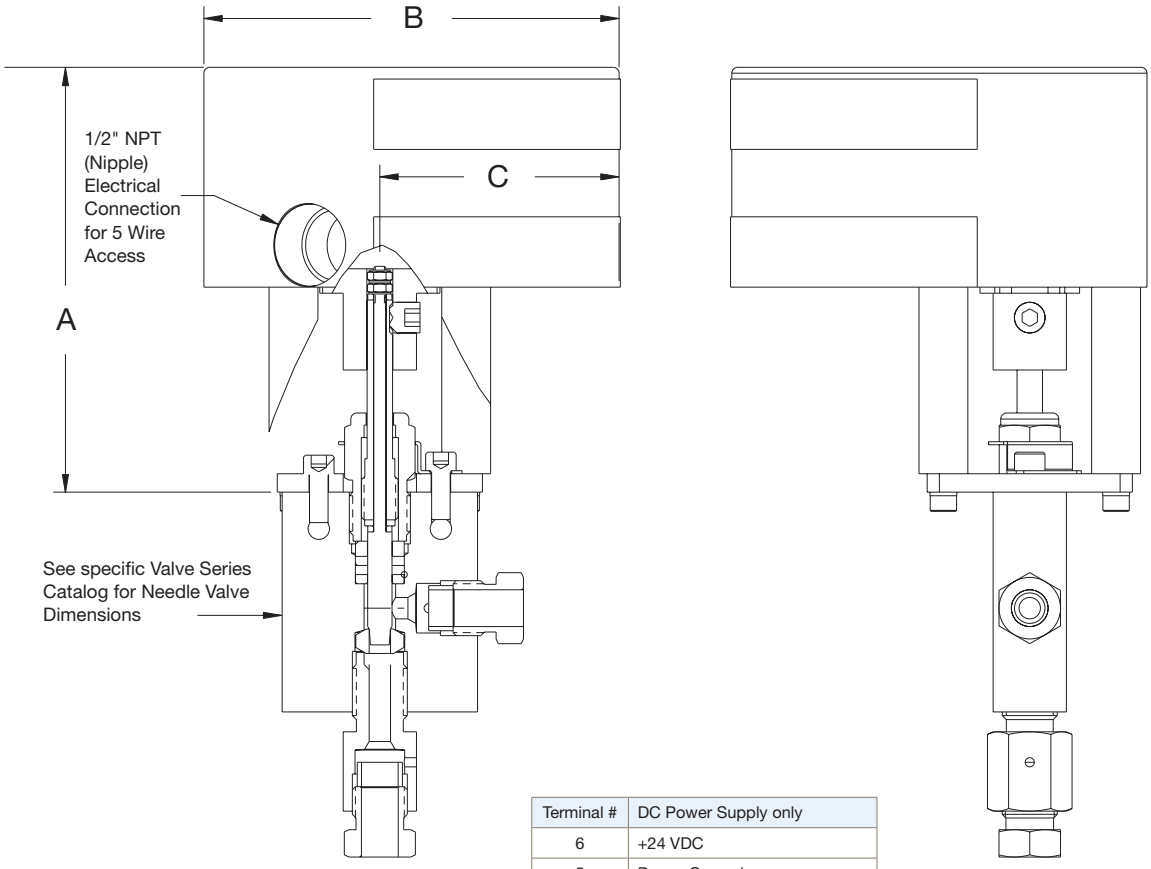

Terminal #	DC Power Supply only
6	+24 VDC
5	Power Ground
4	Output Signal (4-20 mA)
3	Not Connected
2	Isolated Input Signal GND
1	Isolated Input +Signal (4.30mA)

Warning: Do not connect terminal 4 directly or through a Multimeter, to ground. A sensing resistor of 50 ohms or more needs to be present or damage will occur.

Basic Repair Kits
For **Valves** - See specific Manual Valve brochure for valve repair parts and Manual Needle Valve IOM manual for instructions.
For **FRC1X Explosion Proof Actuator** - Replace entire Actuator using Part Number AE003534
For **FRC1X Mounting Kit**: Part Number AE002899

Tel: +45 63 12 83 00 | Email: ps@hymatik.com | www.hymatik.com | Hvidkaervej 27a, DK-5250 Odense SV, Denmark

Dimensional information:

Electric Actuator: FRC2X

Dimensional Information:

Valve Series	Dimensions: inches (mm)		
	A	B	C
1/2" & 3/4" NPT - P Series 1/2" Low Pressure - SW Series 9/16" & 3/4" SM Series Medium Pressure	5.57 (141.4)	4.25 (108)	3.00 (76)

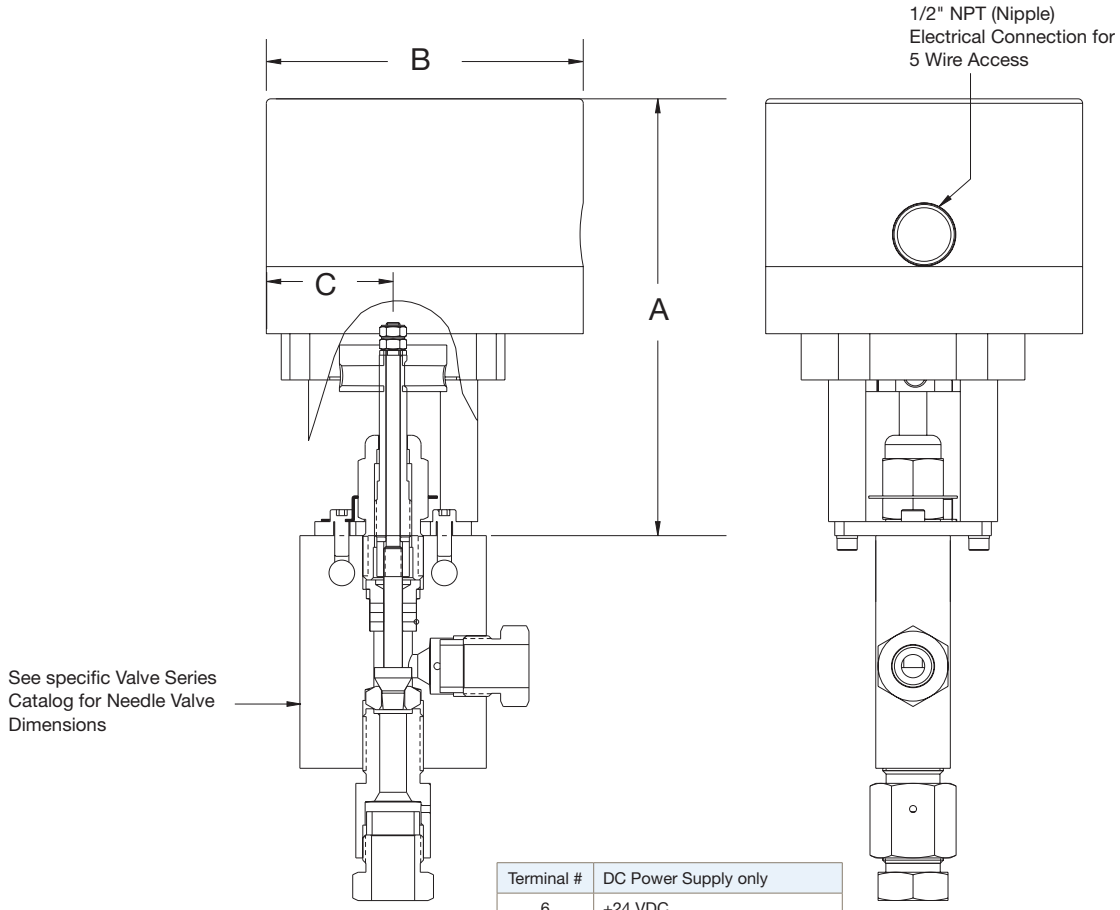

Terminal #	DC Power Supply only
6	+24 VDC
5	Power Ground
4	Output Signal (4-20 mA)
3	Not Connected
2	Isolated Input Signal GND
1	Isolated Input +Signal (4.30mA)

Warning: Do not connect terminal 4 directly or through a Multimeter, to ground. A sensing resistor of 50 ohms or more needs to be present or damage will occur.

Basic Repair Kits
For **Valves** - See specific Manual Valve brochure for valve repair parts and Manual Needle Valve IOM manual for instructions. For **FRC2X Explosion Proof Actuator** - Replace entire Actuator using Part Number AE003534 For **FRC2X Gear Reduction/Mounting Kit**: Part Number AE003535

Tel: +45 63 12 83 00 | Email: ps@hymatik.com | www.hymatik.com | Hvidkaervej 27a, DK-5250 Odense SV, Denmark

Actuators

Micro-Metering Needle Valve Electric Flow Control

Pressure to 60,000 psi (4137 bar)



Principle of Operation:

The Parker Autoclave Engineers Micro-Metering Flow Control Valves are designed for modulating flow or pressure control in industrial and research applications at temperatures of 600°F (315°C) or below. Using our standard Micro-Metering valves configured for many different pressures and tube connection sizes, these valves are capable of very fine flow control with pressures up to 60,000 psi using an electric, multi-turn microprocessor controlled actuator. The combination of these two precision, high quality components, provide a superior low flow, high pressure control valve for use with either liquid or gas.

Electric Flow Control Valve Features:

The microprocess controlled motor guarantees optimum voltage, currect and torque control when starting, running or stopping valve rotation. The microprocessor also assures accurate stem location and repeatability.

- Power Requirement: 24 VDC/50 Watt Minimum
- Control Input: 4-20 mA (200 ohm) or 0-10 VDC (18K ohm)
- Rotation Speed: 10 RPM (6 turn maximum)
- Operating Temperature: -20ºF (-30ºC) to 185ºF (85ºC)
- Two (2) foot lead cable supplied
- Anodized Aluminum Housing, Satin Anodized, IP65 (NEMA 4) Weatherproof

Note:
Minimum Flow is factory set and occurs at “0” position. Do Not Operate the valve below the zero position or damage WILL result. (Valve is only for metering flow and cannot be used to shut OFF flow.)

ENGINEERING YOUR SUCCESS.

Electric Flow Control: Pressures to 60,000 psi (4137 bar)



Part Number	Tube Outside Diameter Size (inches)	Connection Type	Orifice Size Inches (mm)	Rated C_V*	Pressure Rating psi (bar) @Room Temperature**
10VRMM	1/8	W125	0.062 (1.57)	0.004	15,000 (1034)
15PVRMM	1/4	NPT	0.062 (1.57)	0.004	15,000 (1034)
30VRMM	1/4	F250C	0.062 (1.57)	0.004	30,000 (2069)
60VRMM	1/4	F250C	0.062 (1.57)	0.004	60,000 (4137)
60VRMM	3/8	F375C	0.062 (1.57)	0.004	60,000 (4137)

Notes

** For complete temperature ratings see pressure/temperature rating guide in Technical Information section.

Micro-Metering Needle Valve Feature:

For detailed product description see VRMM MicroMetering Series brochure.

- Barrel and Thimble provided visual feedback of position
- 25 Thimble divisions each representing 0.001" of stem travel
- One revolution = 0.025" stem travel
- UNS S31600/S31603, 316/316L Stainless Steel body material
- Connection types, pressure and sizes change by model type
- Temperature Range: -100ºF to 600ºF (-73º to 315ºC) with options
- Replaceable Seat has two seat sides 180° apart

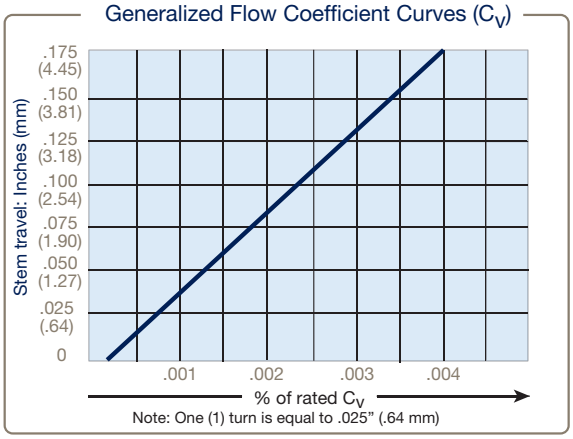

10V2 and SW Series Flow Curve for Vee and Regulating Stem Valves

Ordering Information:

Model	Control Input	Number Rotations	Controller RPMs	See Figure
10VRMM2812-C4	4-20 mA	6	10	1
10VRMM2812-C10	0-10 VDC	6	10	1
15PVRMM4812-C4	4-20 mA	6	10	2
15PVRMM4812-C10	0-10 VDC	6	10	2
30VRMM4812-C4	4-20 mA	6	10	2
30VRMM4812-C10	0-10 VDC	6	10	2
60VRMM4812-C4	4-20 mA	6	10	2
60VRMM4812-C10	0-10 VDC	6	10	2
60VRMM6812-C4	4-20 mA	6	10	2
60VRMM6812-C10	0-10 VDC	6	10	2

Note: For micrometering valve details see needle valve section.

Tel: +45 63 12 83 00 | Email: ps@hymatik.com | www.hymatik.com | Hvidkaervej 27a, DK-5250 Odense SV, Denmark

Electric Flow Control Pressures to 60,000 psi (4137 bar)

Dimensional Information:

Catalog Number	Outside Diameter Tube	Orifice Diameter	Dimension Data - Inches (mm)								Block Thickness	See Figure
			A	B	C	D	E	F	J	K		
10VRMM2812-C4 10VRMM2812-C10	1/8 (3)	.062 (2)	1.50 (38)	.88 (22)	.31 (8)	.94 (24)	1.56 (39)	4.50 (114)	4.75 (121)	.75 (19)	.75 (19)	1
15PVRMM4812-C4 15PVRMM4812-C10	1/4 Pipe	.062 (2)	2.00 (51)	1.00 (25)	NA	1.12 (28)	2.16 (55)	3.50 (89)	4.75 (121)	3.50 (89)	1.00 (25)	2
30VRMM4812-C4 30VRMM4812-C10	1/4 (6)	.062 (2)	2.00 (51)	1.00 (25)	*.50 (13)	1.12 (28)	2.00 (51)	3.50 (89)	4.75 (121)	3.50 (89)	1.00 (25)	2
60VRMM4812-C4 60VRMM4812-C10	1/4 (6)	.062 (2)	2.00 (51)	1.00 (25)	.50 (13)	1.31 (33)	2.63 (67)	3.50 (89)	8.30 (211)	4.10 (104)	1.00 (25)	2
60VRMM6812-C4 60VRMM6812-C10	3/8 (10)	.062 (2)	2.00 (51)	1.00 (25)	.53 (13)	1.31 (33)	2.63 (67)	3.50 (89)	8.30 (211)	4.10 (104)	1.00 (25)	2

* Distance gland extends

10VRMM

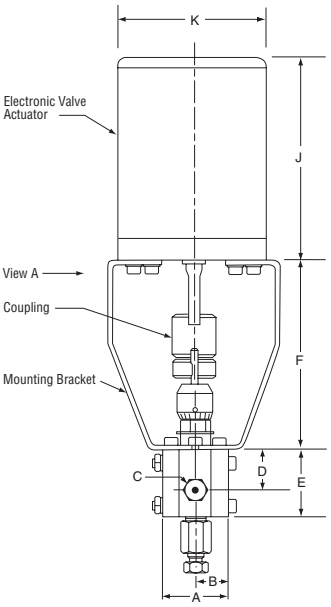

Figure 1

15PVRMM/30VRMM/60VRMM

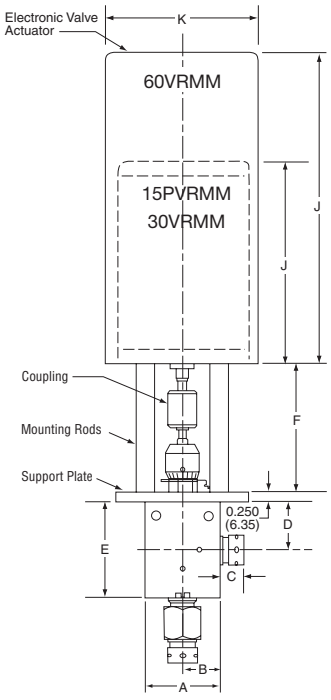

Figure 2

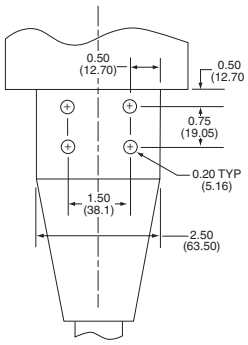

Mounting Dimensions View A

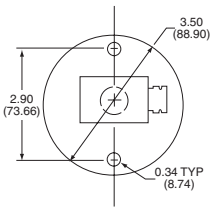

Mounting Dimensions

Note: Minimum Flow is factory set and occurs at "0" position. Do Not Operate the valve below the zero position or damage WILL result.

Tel: +45 63 12 83 00 | Email: ps@hymatik.com | www.hymatik.com | Hvidkaervej 27a, DK-5250 Odense SV, Denmark

Electric Flow Control: Pressures to 60,000 psi (4137 bar)

Valve Packing Options:

Standard Parker Autoclave Engineers 10VRMM, 15PVRMM, and 30VRMM series valves with PTFE packing may be operated from 0° to 450°F (-18° to 232°C). 60VRMM series has nylon/leather/nylon packing and may be operated from 40° F (4°C) to 230°F (110°C). Optional packing or trim material available by adding the following suffixes to catalog order number.

Suffix: **TG** for standard valve with PTFE glass packing, 0° to 600°F (-18° to 316°C).

B for standard valve with cryogenic trim materials and PTFE packing for temperatures below 0°F (-18°C) to -100°F (-73°C).

Parker Autoclave Engineers does not recommend compression sleeve connections below 0°F (-18°C) or above 650°F (343°C). For additional valve options, contact your Sales Representative.

Note: See Needle Valve options for stem and seat coatings for erosive service. Metering valve not to be used as a shutoff valve.

Minimum Flow is factory set and occurs at "0" position. Do Not Operate the valve below the zero position or damage WILL result.

Wiring Diagram:

Description		Wire Color
Power:	+24 VDC	Red
Signal Input:	+ Positive (4-20mA or 0-10 VDC)	Brown
Return:	- Negative	Black
Earth Ground:	Connected to Actuator Chassis Only	Green

Valve Maintenance:

VRMM Valve & Electric actutator is not user serviceable and must be returned to factory for repair. (Contact Repair Department at IPDAECRR@parker.com for ATR prior to shipment.)

Electric Flow Control Actuator Assembly/Wiring:

(Drawing is typical and varies in size across different models)

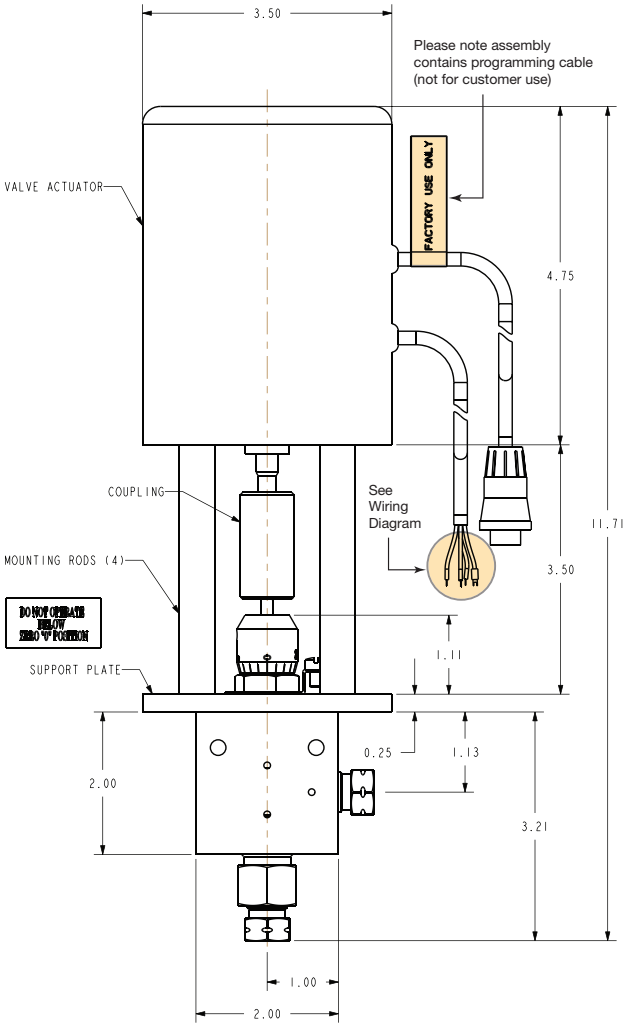

Actuator: Electric Micro-Metering Flow Control Valve 02-9228SE 0718

Tel: +45 63 12 83 00 | Email: ps@hymatik.com | www.hymatik.com | Hvidkaervej 27a, DK-5250 Odense SV, Denmark

fittings & tubing

Tel: +45 63 12 83 00 | Email: ps@hymatik.com | www.hymatik.com | Hvidkaervej 27a, DK-5250 Odense SV, Denmark

Fittings and Tubing

Low Pressure "Speedbite", Single Ferrule to 15,000 psi (1034 bar)

Includes Check Valves, Filters & Couplings



Principle of Operation:

Parker Autoclave Engineers Low Pressure “Speedbite” and “Mini” Series fittings are designed to work with 10V/SW Series and Mini Series Low Pressure Valves as well as Low Pressure Tubing made of commercially sized 316/316L SS in the “Annealed” condition. Pressures to 15,000 psi and sizes from 1/16" to 1/2" are readily available.

The Speedbite connection is a single-ferrule bite-type compression fitting engineered for use with tubing designed by Parker Autoclave Engineers to a controlled hardness. Speedbite fittings employ a bite-type compression style single ferrule that is manually tightened.

Low Pressure Fittings and Tubing Features:

- Single-ferrule compression sleeve connections for up to 15,000 psi MAWP
- Operating temperatures from -100°F (-73°C) to 650°F (343°C)
- Fast easy 1-1/4 turn make-up of connection
- Available sizes are 1/16", 1/8", 1/4", 3/8", and 1/2"
- Fittings manufactured in accordance with ASME B31.3 Chapter IX standards with UNS S31600 316 SS material cold worked to Parker Autoclave proprietary standards (optional material available).
- Tubing manufactured to commercial OD tolerances ASTM A269 dual rated 316/316L material to a controlled hardness to facilitate proper ferrule bite.
- Molybdenum disulfide-coated gland nuts to prevent galling

All Parker Autoclave Engineers fittings are marked with manufacturers name, part number, material, heat code and maximum pressure for complete traceability.

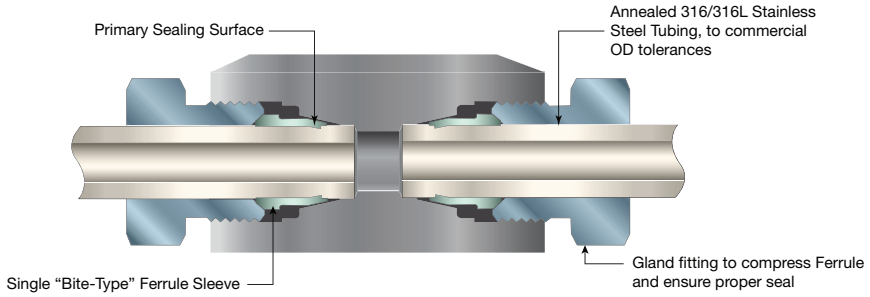

Low Pressure “Speedbite” design “bites” the tubing with little or no tube distortion

ENGINEERING YOUR SUCCESS.

Tel: +45 63 12 83 00 | Email: ps@hymatik.com | www.hymatik.com | Hvidkaervej 27a, DK-5250 Odense SV, Denmark

Fittings and Tubing

Low Pressure Fittings - Pressures to 15,000 psi (1034 bar)



Each fitting or adapter uses UNS S31600 cold worked 316 Stainless Steel and are manufactured in accordance with ASME B31.3 Chapter IX standards. (Optional Materials available, contact factory for selection).

(See “Technical Brochure” for Pressure/Temperature effect on temperatures above ambient.)

Connection Components:

All valves and fittings are supplied complete with appropriate glands and compression sleeves. To order these components separately, use order numbers listed. When using plug, ferrule sleeve is not required. Tubing pressure caps can be found in Adapter Brochure.

Gland	Ferrule Sleeve	Plug
SMN ( )	SSL ( )	SP ( )

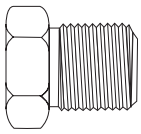

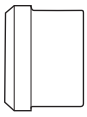

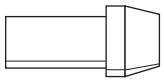

( ) - Add Tube Size Code
1/8" - 20
1/4" - 40
3/8" - 60
1/2" - 80

Example: 1/4" SW Series Gland - SMN40
Note: Special material glands are normally supplied with four flats in place of standard hex.

1/16" tubing system components are available in the mini-fitting series starting on page 6. 1/16" tubing components can be used in 10V Series valves and fittings if required.

To ensure proper fit use Parker Autoclave Engineers tubing.

NACE/ISO 15156 Compatibility

All PAE Low Pressure “Speedbite” Fittings and Tubing can be made with materials suitable for NACE/ISO 15156 requirements. As per NACE and ISO-15156, it is contingent on the end user to select this material. As this compatibility limits the use of “cold worked” materials, pressure reduction in MAWP can be expected. Please consult our Technical Brochure where we identify the more popular annealed materials along with the pressure reduction. Our Sour Oil and Gas brochure has a more complete description of the available options for pressures up to 30,000 psi.

NACE Suffix adder options:

“**-SOG**” suffix is used along with optional material to generate a hardness verification of pressure containing parts to generate a NACE certificate of compliance.

Tel: +45 63 12 83 00 | Email: ps@hymatik.com | www.hymatik.com | Hvidkaervej 27a, DK-5250 Odense SV, Denmark

Elbow

Catalog Number	Connection Type	Outside Diameter Tube	Pressure Rating psi (bar)*	Orifice inches (mm)	Dimensions - inches (mm)							Block Thickness
					A	B	C	D Typical	E	F	G Thickness	
SL2200	W125	1/8 (3.18)	15,000 (1034)	.094 (2.39)	1.00 (24.40)	1.50 (38.10)	0.31 (7.87)	0.38 (9.53)	0.75 (19.05)	0.75 (19.05)	-	0.62 (15.75)
SL4400	SW250	1/4 (6.35)	15,000 (1034)	.188 (4.78)	1.38 (35.05)	2.00 (50.80)	0.44 (11.18)	0.63 (15.88)	1.00 (25.40)	1.00 (25.40)	-	0.75 (19.05)
SL6600	SW375	3/8 (9.53)	15,000 (1034)	.312 (7.92)	1.38 (35.05)	2.00 (50.80)	0.53 (13.46)	0.75 (19.05)	1.00 (25.40)	1.00 (25.40)	-	0.75 (19.05)
SL8800	SW500	1/2 (12.70	10,000 (689)	.438 (11.13)	1.75 (44.45)	2.50 (63.50)	0.53 (13.46)	0.93 (23.62)	1.25 (31.75)	1.25 (31.75)	-	1.00 (25.40)

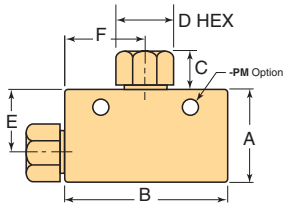

Elbow

*Maximum pressure rating is based on the lowest rating of any component. Actual working pressure may be determined by tubing pressure rating, if lower. All dimensions for reference only and subject to change.

For prompt service, Parker Autoclave Engineers stocks select products. Consult your local representative.

For mounting hole option add suffix **PM** to catalog number. Consult factory for mounting hole dimensions.

Tee

Catalog Number	Connection Type	Outside Diameter Tube	Pressure Rating psi (bar)*	Orifice inches (mm)	Dimensions - inches (mm)							Block Thickness
					A	B	C	D Typical	E	F	G Thickness	
ST2220	W125	1/8 (3.18)	15,000 (1034)	.094 (2.39)	1.00 (24.40)	1.50 (38.10)	0.31 (7.87)	0.38 (9.53)	0.75 (19.05)	0.75 (19.05)	-	0.62 (15.75)
ST4440	SW250	1/4 (6.35)	15,000 (1034)	.188 (4.78)	1.38 (35.05)	2.00 (50.80)	0.44 (11.18)	0.63 (15.88)	1.00 (25.40)	1.00 (25.40)	-	0.75 (19.05)
ST6660	SW375	3/8 (9.53)	15,000 (1034)	.312 (7.92)	1.38 (35.05)	2.00 (50.80)	0.53 (13.46)	0.75 (19.05)	1.00 (25.40)	1.00 (25.40)	-	0.75 (19.05)
ST8880	SW500	1/2 (12.70)	10,000 (689)	.438 (11.13)	1.75 (44.45)	2.50 (63.50)	0.53 (13.46)	0.93 (23.62)	1.25 (31.75)	1.25 (31.75)	-	1.00 (25.40)

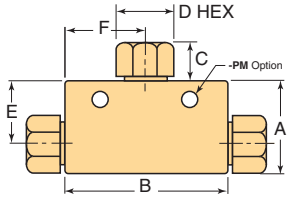

Tee

*Maximum pressure rating is based on the lowest rating of any component. Actual working pressure may be determined by tubing pressure rating, if lower. All dimensions for reference only and subject to change.

For prompt service, Parker Autoclave Engineers stocks select products. Consult your local representative.

For mounting hole option add suffix **PM** to catalog number. Consult factory for mounting hole dimensions.

Tel: +45 63 12 83 00 | Email: ps@hymatik.com | www.hymatik.com | Hvidkaervej 27a, DK-5250 Odense SV, Denmark

Cross

Catalog Number	Connection Type	Outside Diameter Tube	Pressure Rating psi (bar)*	Orifice inches (mm)	Dimensions - inches (mm)							Block Thickness
					A	B	C	D Typical	E	F	G Thickness	
SX2222	W125	1/8 (3.18)	15,000 (1034)	.094 (2.39)	1.50 (38.10)	1.50 (38.10)	0.31 (7.87)	0.38 (9.53)	0.75 (19.05)	0.75 (19.05)	-	0.62 (15.75)
SX4444	SW250	1/4 (6.35)	15,000 (1034)	.188 (4.78)	2.00 (50.80)	2.00 (50.80)	0.44 (11.18)	0.63 (15.88)	1.00 (25.40)	1.00 (25.40)	-	0.75 (19.05)
SX6666	SW375	3/8 (9.53)	15,000 (1034)	.312 (7.92)	2.00 (50.80)	2.00 (50.80)	0.53 (13.46)	0.75 (19.05)	1.00 (25.40)	1.00 (25.40)	-	0.75 (19.05)
SX8888	SW500	1/2 (12.70)	10,000 (689)	.438 (11.13)	2.50 (63.50)	2.50 (63.50)	0.53 (13.46)	0.93 (23.62)	1.25 (31.75)	1.25 (31.75)	-	1.00 (25.40)

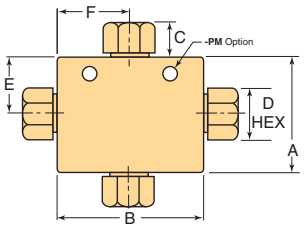

Cross

*Maximum pressure rating is based on the lowest rating of any component. Actual working pressure may be determined by tubing pressure rating, if lower. All dimensions for reference only and subject to change.

For prompt service, Parker Autoclave Engineers stocks select products. Consult your local representative.

For mounting hole option add suffix **PM** to catalog number. Consult factory for mounting hole dimensions.

Straight Coupling

Catalog Number	Connection Type	Outside Diameter Tube	Pressure Rating psi (bar)*	Orifice inches (mm)	Dimensions - inches (mm)						
					A	B	C	D Typical	E	F	G Thickness
15F2211	W125	1/8 (3.18)	15,000 (1034)	.094 (2.39)	0.50 (12.70)	1.25 (31.75)	0.31 (7.87)	0.38 (9.53)			-
6F4422	SW250	1/4 (6.35)	15,000 (1034)	.188 (4.78)	0.62 (15.75)	1.62 (41.15)	0.44 (11.18)	0.63 (15.88)			-
6F6622	SW375	3/8 (9.53)	15,000 (1034)	.312 (7.92)	0.75 (19.05)	0.75 (19.05)	0.53 (13.46)	0.75 (19.05)			-
4F8822	SW500	1/2 (12.70)	10,000 (689)	.438 (11.13)	1.00 (25.40)	2.00 (50.80)	0.53 (13.46)	0.93 (23.62)			-

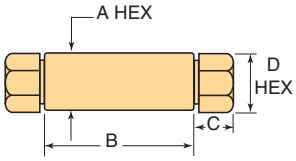

Straight Coupling

*Maximum pressure rating is based on the lowest rating of any component.
Actual working pressure may be determined by tubing pressure rating, if lower.
All dimensions for reference only and subject to change.

For prompt service, Parker Autoclave Engineers stocks select products. Consult your local representative.

For mounting hole option add suffix **PM** to catalog number. Consult factory for mounting hole dimensions.

Tel: +45 63 12 83 00 | Email: ps@hymatik.com | www.hymatik.com | Hvidkaervej 27a, DK-5250 Odense SV, Denmark

Bulkhead Coupling

Catalog Number	Connection Type	Outside Diameter Tube	Pressure Rating psi (bar)*	Orifice inches (mm)	Dimensions - inches (mm)						
					A	B	C	D Typical	E	F	G Thickness
15BF2211	W125	1/8 (3.18)	15,000 (1034)	.094 (2.39)	0.69 (17.53)	1.75 (44.45)	0.31 (7.87)	0.38 (9.53)	0.38 (9.53)	0.75 (19.05)	0.38 (9.53)
6BF4422	SW250	1/4 (6.35)	15,000 (1034)	.188 (4.78)	0.94 (23.88)	1.88 (47.75)	0.44 (11.18)	0.63 (15.88)	0.50 (12.70)	1.00 (25.403)	0.38 (9.53)
6BF6622	SW375	3/8 (9.53)	15,000 (1034)	.312 (7.92)	0.94 (23.88)	1.88 (47.75)	0.53 (13.46)	0.75 (19.05)	0.50 (12.70)	1.00 (25.403)	0.38 (9.53)
4BF8822	SW500	1/2 (12.70)	10,000 (689)	.438 (11.13)	1.12 (28.45)	2.38 (60.45)	0.53 (13.46)	0.93 (23.62)	0.78 (19.81)	1.38 (35.05)	0.38 (9.53)

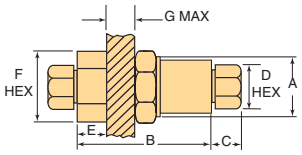

Bulkhead Coupling

*Maximum pressure rating is based on the lowest rating of any component.
Actual working pressure may be determined by tubing pressure rating, if lower.
All dimensions for reference only and subject to change.

For prompt service, Parker Autoclave Engineers stocks select products. Consult your local representative.

For mounting hole option add suffix **PM** to catalog number. Consult factory for mounting hole dimensions.

Tel: +45 63 12 83 00 | Email: ps@hymatik.com | www.hymatik.com | Hvidkaervej 27a, DK-5250 Odense SV, Denmark

Fittings and Tubing

Mini Series Fittings - Pressures to 15,000 psi (1034 bar)

Connection Components:

All valves and fittings are supplied complete with appropriate glands and compression sleeves. To order these components separately, use order numbers listed. When using plug, ferrule sleeve is not required.

Gland
SMN ( )

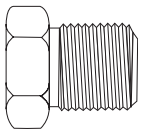

( ) - Add Tube Size Code

1/16" - 10
1/8" - 20

Example:
1/16" Gland Nut = SMN10

Ferrule Sleeve
SSL ( )

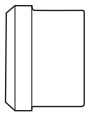

( ) - Add Tube Size Code

1/16" - 10
1/8" - 20

Example:
1/8" Ferrule Sleeve = SSL20

Plug
SP ( )

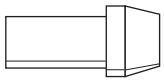

( ) - Add Tube Size Code

1/16" - 10
1/8" - 20

Example:
1/8" Plug = SP20

Note: Special material glands are normally supplied with four flats in place of standard hex.

(See “Technical Brochure” for Pressure/Temperature effect on temperatures above ambient.)

Mini Series Elbow

Catalog Number	Connection Type	Outside Diameter Tube	Pressure Rating psi (bar)*	Orifice inches (mm)	Dimensions - inches (mm)							Block Thickness
					A	B	C	D Typical	E	F		
MLE1100	W062	1/16 (1.59)	15,000 (1034)	.055 (1.40)	1.00 (24.40)	1.00 (24.40)	0.31 (7.87)	0.38 (9.53)	0.69 (17.45)	0.69 (17.45)	-	0.56 (14.27)
MLE2200	W125	1/8 (3.18)	15,000 (1034)	.093 (2.36)	1.00 (24.40)	1.00 (24.40)	0.31 (7.87)	0.38 (9.53)	0.69 (17.45)	0.69 (17.45)	-	0.56 (14.27)

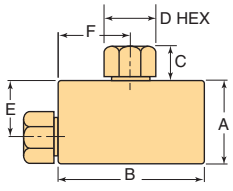

Mini Series Elbow

*Maximum pressure rating is based on the lowest rating of any component. Actual working pressure may be determined by tubing pressure rating, if lower. All dimensions for reference only and subject to change.

For prompt service, Parker Autoclave Engineers stocks select products. Consult your local representative.

Tel: +45 63 12 83 00 | Email: ps@hymatik.com | www.hymatik.com | Hvidkaervej 27a, DK-5250 Odense SV, Denmark

Mini Series Tee

Catalog Number	Connection Type	Outside Diameter Tube	Pressure Rating psi (bar)*	Orifice inches (mm)	Dimensions - inches (mm)							Block Thickness
					A	B	C	D Typical	E	F		
MTE1110	W062	1/16 (1.59)	15,000 (1034)	.055 (1.40)	1.00 (24.40)	1.38 (34.93)	0.31 (7.87)	0.38 (9.53)	0.69 (17.45)	0.69 (17.45)	-	0.56 (14.27)
MTE2200	W125	1/8 (3.18)	15,000 (1034)	.093 (2.36)	1.00 (24.40)	1.38 (34.93)	0.31 (7.87)	0.38 (9.53)	0.69 (17.45)	0.69 (17.45)	-	0.56 (14.27)

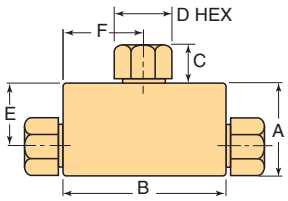

Mini Series Tee

*Maximum pressure rating is based on the lowest rating of any component. Actual working pressure may be determined by tubing pressure rating, if lower. All dimensions for reference only and subject to change.

For prompt service, Parker Autoclave Engineers stocks select products. Consult your local representative.

Mini Series Cross

Catalog Number	Connection Type	Outside Diameter Tube	Pressure Rating psi (bar)*	Orifice inches (mm)	Dimensions - inches (mm)							Block Thickness
					A	B	C	D Typical	E	F		
MXE1111	W062	1/16 (1.59)	15,000 (1034)	.055 (1.40)	1.38 (34.93)	1.38 (34.93)	0.31 (7.87)	0.38 (9.53)	0.69 (17.45)	0.69 (17.45)	-	0.56 (14.27)
MXE2222	W125	1/8 (3.18)	15,000 (1034)	.093 (2.36)	1.38 (34.93)	1.38 (34.93)	0.31 (7.87)	0.38 (9.53)	0.69 (17.45)	0.69 (17.45)	-	0.56 (14.27)

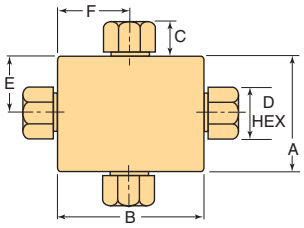

Mini Series Cross

*Maximum pressure rating is based on the lowest rating of any component. Actual working pressure may be determined by tubing pressure rating, if lower. All dimensions for reference only and subject to change.

For prompt service, Parker Autoclave Engineers stocks select products. Consult your local representative.

Tel: +45 63 12 83 00 | Email: ps@hymatik.com | www.hymatik.com | Hvidkaervej 27a, DK-5250 Odense SV, Denmark

Mini Series Straight Coupling

Catalog Number	Connection Type	Outside Diameter Tube	Pressure Rating psi (bar)*	Orifice inches (mm)	Dimensions - inches (mm)						
					A	B	C	D Typical	E	F	
MCE1110	W062	1/16 (1.59)	15,000 (1034)	.055 (1.40)	0.50 (12.70)	1.25 (31.75)	0.31 (7.87)	0.38 (9.53)			-
MCE2200	W125	1/8 (3.18)	15,000 (1034)	.093 (2.36)	0.50 (12.70)	1.25 (31.75	0.31 (7.87)	0.38 (9.53)			-

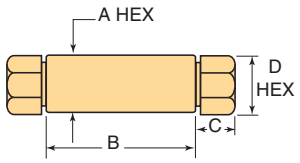

Mini Series Straight Coupling

*Maximum pressure rating is based on the lowest rating of any component.
Actual working pressure may be determined by tubing pressure rating, if lower.
All dimensions for reference only and subject to change.

For prompt service, Parker Autoclave Engineers stocks select products. Consult your local representative.

Tel: +45 63 12 83 00 | Email: ps@hymatik.com | www.hymatik.com | Hvidkaervej 27a, DK-5250 Odense SV, Denmark

Fittings and Tubing

Low Pressure Tubing - Pressures to 15,000 psi (1034 bar)



Parker Autoclave Engineers offers a complete selection of annealed, seamless stainless steel tubing designed to match the performance standards of Parker Autoclave Low Pressure valves and fittings. This tubing is manufactured of UNS S316/S31603, 316/316L Stainless Steel and furnished in random lengths between 20 feet (6 meters) and 26.5 feet (8 meters). In order to ensure proper sleeve "bite" into tubing, Parker Autoclave Engineers specifies and controls the strength and hardness levels of both the tube and sleeve materials.

Inspection and Testing:

Parker Autoclave Engineers annealed low pressure tubing is inspected for compliance with specified defect restrictions as well as carburization or inter-granular carbide precipitation. The tubing outside diameter and wall thickness is controlled within close tolerance to assure proper fit. Sample pieces of tube (for each lot) are tested to confirm mechanical properties for proper compression sleeve "bite" and pressure capability. Furthermore, the sample tubes are pressure tested as a final check.

Special Material:

In addition to the type 316/316L stainless steel tubing in the annealed condition listed in this section, Parker Autoclave Engineers has a limited stock of hard-to-obtain shorter lengths of the following tubing materials:

Monel*, Inconel 600*, Titanium Grade 2*,
Hastelloy C276*, Inconel 625*, and Incoloy 825*
(See Technical Catalog for additional information)

Note: * Trademark names, Please consult factory for stock availabilty.
NACE MR0175/ISO 15156 Options are available. Consult Factory.

Tubing Tolerance:

Nominal Tubing Size inches	Tolerance/Outside Diameter inches (mm)
1/16	.064/.062 (1.62/1.57)
1/8	.128/.125 (3.25/3.18)
1/4	.254/.250 (6.45/6.35)
3/8	.379/.375 (9.74/9.53)
1/2	.505/.500 (12.83/12.70)

Tubing Details: 316/316L, UNS S31600/S31603 Stainless Steel (Annealed) to commercial OD sizing tolerances

*Maximum pressure rating is based on the lowest rating of any component. Actual working pressure may be determined by tubing pressure rating, if lower. All dimensions for reference only and subject to change.

For prompt service, Parker Autoclave Engineers stocks select products. Consult your local representative.

Catalog Number	Tube Material	Fits Connection Type	Tube Size inches (mm)			Flow Area in^2 (mm^2)	Working Pressure psi (bar)*				
			Outside Diameter	Inside Diameter	Wall Thickness		-100 to 100°F (-73 to 37.8°C)	200°F (93°C)	400°F (204°C)	600°F (316°C)	650°F (343°C)
MS15-070	316SS	W062	1/16 (1.59)	0.026 (0.66)	.018 (0.45)	0.0005 (0.32)	15,000 (1034)	15,000 (1034)	14,400 (992)	13,600 (937)	12,600 (868)
MS15-200	316SS	W125	1/8 (3.18)	0.052 (1.32)	.036 (0.91)	0.002 (1.29)	15,000 (1034)	15,000 (1034)	14,400 (992)	13,600 (937)	12,600 (868)
MS15-051				0.062 (1.57)	.032 (0.81)	0.003 (1.94)	11,650 (803)	11,650 (803)	11,250 (715)	10,680 (730)	9,850 (630)
MS15-203	316SS	SW250	1/4 (6.35)	0.084 (2.13)	0.083 (2.11)	0.006 (3.87)	15,000 (1034)	15,000 (1034)	14,400 (992)	13,600 (937)	12,600 (868)
MS15-055				0.125 (3.18)	0.062 (1.57)	0.012 (7.74)	11,650 (8034)	11,650 (8034)	11,250 (775)	10,600 (730)	9,850 (679)
MS15-204	316SS	SW375	3/8 (9.53)	0.139 (3.53)	0.118 (3.00)	0.015 (9.79)	15,000 (1034)	15,000 (1034)	14,400 (992)	13,600 (937)	12,600 (868)
MS15-084				0.195 (4.95)	0.090 (2.29)	0.030 (19.40)	10,000 (690)	10,000 (690)	9,650 (665)	9,000 (620)	8,400 (580)
MS15-062				0.250 (6.35)	0.062 (1.57)	0.049 (31.61)	7,500 (517)	7,500 (517)	7,200 (496)	6,800 (468)	6,300 (434)
MS15-205	316SS	SW500	1/2 (12.70)	0.270 (6.86)	0.118 (3.00)	0.055 (35.48)	10,000 (689)	10,000 (689)	9,650 (665)	9,000 (620)	8,400 (579)
MS15-065				0.375 (9.53)	0.062 (1.57)	0.110 (70.97)	5,500 (379)	5,500 (379)	5,250 (361)	4,950 (341)	4,600 (317)

Tel: +45 63 12 83 00 | Email: ps@hymatik.com | www.hymatik.com | Hvidkaervej 27a, DK-5250 Odense SV, Denmark

Fittings and Tubing

Low Pressure Check Valves - Pressures to 15,000 psi (1034 bar)

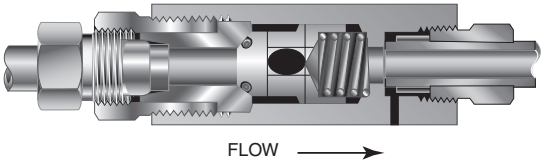

SWO Series O-Ring Check Valve

Provide unidirectional flow and tight shut-off for liquids and gases with high reliability. When differential drops below cracking pressure, valve shuts off. (**Not for use as relief valve.**)

Temperature Ranges:

Viton (FKM) O-ring (std.): 0° to 400°F (-18° to 204°C)
Buna-N O-ring (**-BO** suffix): 0° to 250°F (-18° to 121°C)
FFKM O-ring (**-KO** suffix): 30° to 500°F (-18° to 260°C)
PTFE O-ring (**-TO** suffix): -100° to 400°F (-73° to 204°C)
PTFE O-ring with Low Temp Spring (**-LTTO** suffix): to -100°F (-73°C)

Cracking Pressure: 20 psi (1.38 bar) ±30%. Springs for higher cracking pressures up to 100 psi available on special order for O-ring style check valves only.

Installation: Vertical or Horizontal as required. Flow Direction Arrow marked on valve body.

CAUTION: While testing has shown O-Rings to provide satisfactory service life, both cyclic and shelf life may vary widely with differing service conditions, properties of reactants, pressure and temperature cycling and age of the O-ring. FREQUENT INSPECTIONS SHOULD BE MADE to detect any deterioration, and O-rings replaced as required.

(See “Technical Brochure” for Pressure/Temperature effect on temperatures above ambient.)

Material of Construction:

Item #	Description	Material
1	Gland Nut	316 SS
2	Cover	316 SS
3	O-ring	FKM
4	Poppet	316 SS
5	Body	316 SS
6	Spring	302 SS

Typical spare parts found in Repair Kits

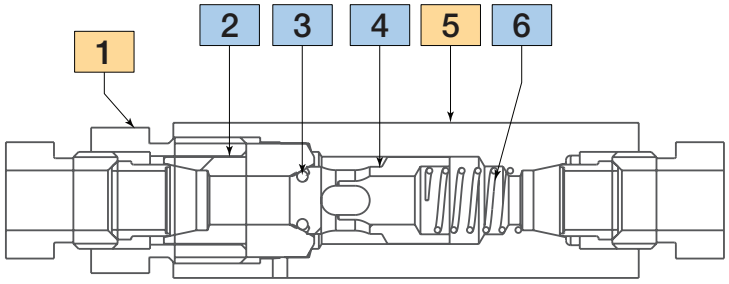

O-Ring Check Valve Repair Kits:

Check Valves are easily repaired. Add “**R**” to front of valve catalog number for proper repair kit (example: RSWO8800)

See “Cover Torque” on page 14 for re-assembly. Include any catalog number suffix marked on original part when ordering repair kit.

Tel: +45 63 12 83 00 | Email: ps@hymatik.com | www.hymatik.com | Hvidkaervej 27a, DK-5250 Odense SV, Denmark

Fittings and Tubing

Low Pressure Check Valves - Pressures to 15,000 psi (1034 bar)

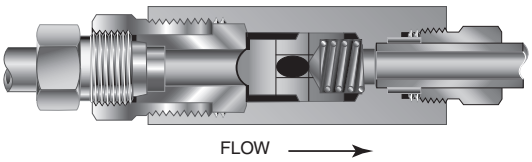

SWB Series Ball Check Valve

Prevent reverse flow where leak-tight shut-off is not mandatory. When differential drops below cracking pressure, valve closes. With all-metal components, valve can be used up to 650°F (343°C). See Technical Information section for connection temperature limitations. (**Not for use as relief valve.**)

Ball and poppet are an integral design to assure positive, in-line seating without "chatter". Poppet is designed essentially for axial flow with minimum pressure drop.

Cracking Pressure: 20 psi (1.38 bar) +/- 30%
Optional cracking pressures **NOT** available in Ball Style Check Valves

Temperature: Minimum operating temperature for standard ball check valves 0°F (-17.8°C). For low temperature option to -100°F (-73°C) add suffix **LT** (Low temperature spring).

Installation: Vertical or Horizontal as required. Flow Direction Arrow marked on valve body.

NOTE: For optional material see Technical Brochure. Special material check valves are normally supplied with four flats in place of standard hex.

(See "Technical Brochure" for Pressure/Temperature effect on temperatures above ambient.)

Material of Construction:

Item #	Description	Material
1	Gland Nut	316 SS
2	Cover	316 SS
3	Poppet	316 SS
4	Spring	302 SS
5	Body	316 SS

Typical spare parts found in Repair Kits

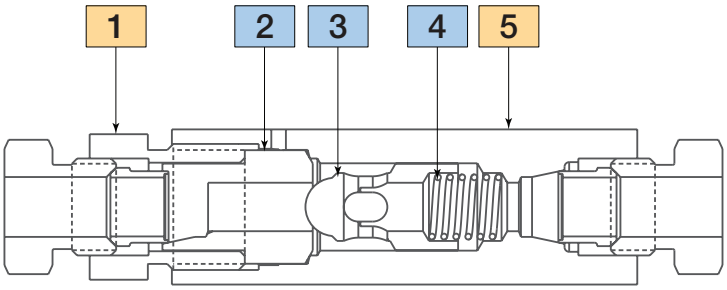

Basic Ball Check Valve Repair Kits:

Check Valves are easily repaired. Add "**R**" to front of valve catalog number for proper repair kit (example: RSWB6600)

See "Cover Torque" on page 14 for re-assembly. Include any catalog number suffix marked on original part when ordering repair kit.

Tel: +45 63 12 83 00 | Email: ps@hymatik.com | www.hymatik.com | Hvidkaervej 27a, DK-5250 Odense SV, Denmark

Fittings and Tubing

Low Pressure Check Valves - Pressures to 15,000 psi (1034 bar)

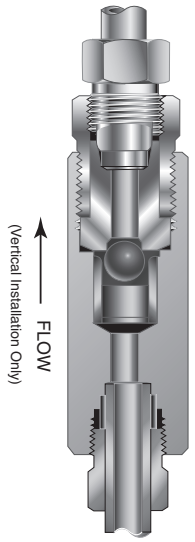

SWK Series Ball Type
Excess Flow Valves

Protects pressure gauges and pressure instrumentation from sudden surges in flow or venting in the event of line failure.

Vertical Installation: Since this type of check valve employs a non-spring loaded ball, valve MUST be installed in VERTICAL position with arrow on valve body pointing UP. (cover gland up).

Resetting Valve: Equalize the pressure across the ball. The ball will drop and reset automatically.

Temperature: Operating temperature for standard ball excess flow valves -100°F to 650°F (-73° to 343°C).

(See "Technical Brochure" for Pressure/Temperature effect on temperatures above ambient.)

Material of Construction:

Item #	Description	Material
1	Gland Nut	316 SS
2	Cover	316 SS
3	Ball	302 SS
4	Sleeve	316 SS
5	Body	316SS

Typical spare parts found in Repair Kits

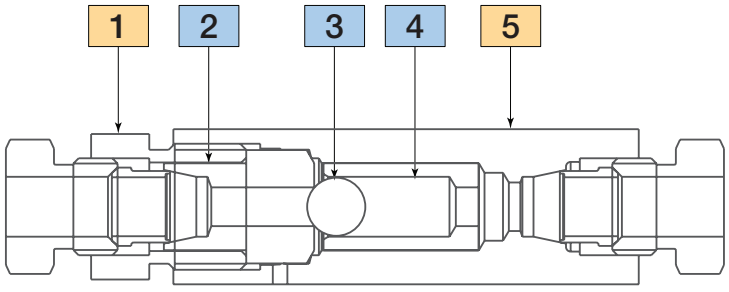

Ball Type Excess Flow Repair Kits:

Excess Flow Valves are easily repaired. Add "**R**" to front of valve catalog number for proper repair kit.
(example: RSWK8802)

See "Cover Torque" on page 14 for re-assembly. Include any catalog number suffix marked on original part when ordering repair kit.

Tel: +45 63 12 83 00 | Email: ps@hymatik.com | www.hymatik.com | Hvidkaervej 27a, DK-5250 Odense SV, Denmark

Fittings and Tubing

Low Pressure Check Valves - Pressures to 15,000 psi (1034 bar)

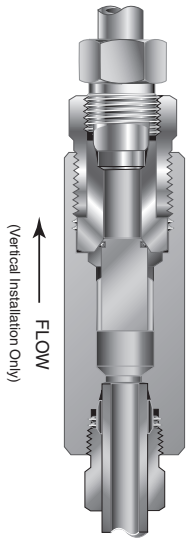

SWKO Series O-Ring Type Excess Flow Valves

Protects pressure gauges and other pressure instrumentation from sudden surges in flow due to operator error or line failure. This valve provides dependable, tight shut-off.

Vertical Installation: Since this type of check valve employs a non-spring loaded poppet, valve MUST be installed in VERTICAL position with arrow on valve body pointing UP. (cover gland up).

Resetting Valve: Equalize the pressure across the poppet. The poppet will drop and reset automatically.

Temperature Ranges:

Viton (FKM) O-ring (std.): 0° to 400°F (-18° to 204°C)
Buna-N O-ring (**-BO** suffix): 0° to 250°F (-18° to 121°C)
PTFE O-ring (**-TO** suffix): -100° to 400°F (-73° to 204°C)

CAUTION: While testing has shown O-Rings to provide satisfactory service life, both cyclic and shelf life may vary widely with differing service conditions, properties of reactants, pressure and temperature cycling and age of the O-ring. FREQUENT INSPECTIONS SHOULD BE MADE to detect any deterioration, and O-rings replaced as required.

CAUTION: See Tubing section for proper selection of tubing.

(See “Technical Brochure” for Pressure/Temperature effect on temperatures above ambient.)

Material of Construction:

Item #	Description	Material
1	Gland Nut	316 SS
2	Cover	316 SS
3	O-Ring	FKM
4	Sleeve	316 SS
5	Body	316SS

Typical spare parts found in Repair Kits

O-Ring Excess Flow Valve Repair Kits:

Excess Flow Valves are easily repaired. Add “**R**” to front of valve catalog number for proper repair kit (example: RSWKO6600)

See “Cover Torque” on page 14 for re-assembly. Include any catalog number suffix marked on original part when ordering repair kit.

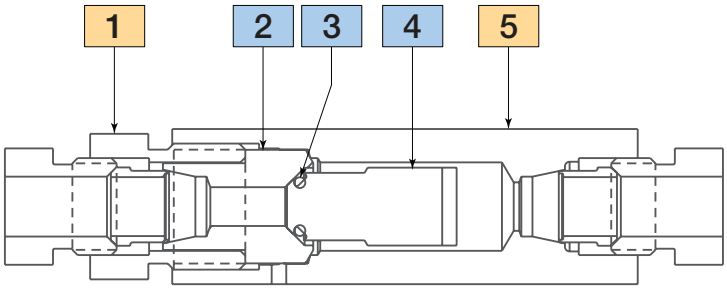

Tel: +45 63 12 83 00 | Email: ps@hymatik.com | www.hymatik.com | Hvidkaervej 27a, DK-5250 Odense SV, Denmark

SWO O-Ring Check Valves

Catalog Number	Fits Connection Type	Pressure Rating psi (bar)*	Orifice inches (mm)	Rated Cv	Cover Torque ft.lb (Nm)	Dimensions - inches (mm)				
						A	B	C	D Typical	Hex
SWO2200	W125	15,000 (1034)	.094 (2.39)	.15	.20 (27)	2.25 (57.15)	1.88 (47.75)	0.31 (7.87)	0.38 (9.6)	0.63 (15.88)
SWO4400	SW250	15,000 (1034)	.188 (4.78)	.63	.20 (27)	3.18 (80.77)	2.56 (65.02)	0.44 (11.18)	0.63 (15.88)	0.81 (20.57)
SWO6600	SW375	15,000 (1034)	.250 (6.35)	1.70	.55 (75)	3.56 (90.42)	3.00 (76.20)	0.53 (13.46)	0.75 (19.05)	1.00 (25.40)
SWO8800	SW500	10,000 (689)	.375 (9.53)	3.40	.70 (95)	4.18 (106.17)	3.50 (89.90)	0.53 (13.46)	0.93 (23.62)	1.38 (35.05)

SWB Ball Check Valves

SWB2200	W125	15,000 (1034)	.094 (2.39)	.15	.20 (27)	2.25 (57.15)	1.88 (47.75)	0.31 (7.87)	0.38 (9.6)	0.63 (15.88)
SWB4400	SW250	15,000 (1034)	.188 (4.78)	.63	.45 (61)	3.18 (80.77)	2.56 (65.02)	0.44 (11.18)	0.63 (15.88)	0.81 (20.57)
SWB6600	SW375	15,000 (1034)	.250 (6.35)	1.70	.55 (75)	3.56 (90.42)	3.00 (76.20)	0.53 (13.46)	0.75 (19.05)	1.00 (25.40)
SWB8800	SW500	10,000 (689)	.375 (9.53)	3.40	.50 (68)	4.18 (106.17)	3.50 (89.90)	0.53 (13.46)	0.93 (23.62)	1.38 (35.05)

SWK Ball Type Excess Flow Valves

SWK2202	W125	15,000 (1034)	.094 (2.39)	.12†	.20 (27)	2.25 (57.15)	1.88 (47.75)	0.31 (7.87)	0.38 (9.6)	0.63 (15.88)
SWK4402	SW250	15,000 (1034)	.188 (4.78)	.37†	.40 (54)	3.18 (80.77)	2.56 (65.02)	0.44 (11.18)	0.63 (15.88)	0.81 (20.57)
SWK6602	SW375	15,000 (1034)	.250 (6.35)	.104†	.80 (110)	3.56 (90.42)	3.00 (76.20)	0.53 (13.46)	0.75 (19.05)	1.00 (25.40)
SWK8802	SW500	10,000 (689)	.375 (9.53)	.212†	.50 (68)	4.18 (106.17)	3.50 (89.90)	0.53 (13.46)	0.93 (23.62)	1.38 (35.05)

SWKO O-Ring Type Excess Flow Valves

SWKO4400	SW250	15,000 (1034)	.188 (4.78)	3††	.40 (54)	3.12 (79.25)	2.56 (65.02)	0.44 (11.18)	0.63 (15.88)	0.81 (20.57)
SWKO6600	SW375	15,000 (1034)	.250 (6.35)	5††	.40 (54)	3.50 (88.90)	3.00 (76.20)	0.53 (13.46)	0.75 (19.05)	1.00 (25.40)
SWKO8800	SW500	10,000 (689)	.375 (9.53)	10††	.50 (68)	4.31 (109.47)	3.50 (89.90)	0.53 (13.46)	0.93 (23.62)	1.38 (35.05)

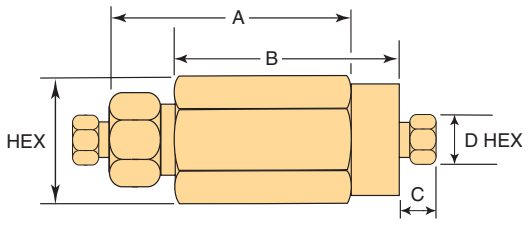

Check and Excess Flow Valves

Note:
All check valves are furnished complete with connection components unless otherwise specified.

† Check Flow** - water, GPM
†† Check Flow** - CFM, nitrogen @ 500 psi (34.47 bar), RT
** - For flow using alternate fluids, consult Parker Autoclave Engineers.

*Maximum pressure rating is based on the lowest rating of any component. Actual working pressure may be determined by tubing pressure rating, if lower. All dimensions for reference only and subject to change. For prompt service, Parker Autoclave stocks select products. Consult your local representative.

Tel: +45 63 12 83 00 | Email: ps@hymatik.com | www.hymatik.com | Hvidkaervej 27a, DK-5250 Odense SV, Denmark

Fittings and Tubing

Low Pressure Line Filter - Pressures to 15,000 psi (1034 bar)

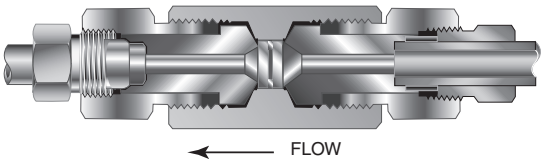

SLF Series Dual Disc Line Filters

Dual-Disc Line Filters are utilized in numerous industrial, chemical processing, aerospace, nuclear and other applications. With the dual-disc design, large contaminant particles are trapped by the upstream filter element before they can reach and clog the smaller micron-size downstream element. Filter elements can be easily replaced.

Materials:
Body, Cover, and Gland Nut - CW 316 Stainless Steel

Filter Element: 316L Stainless Steel, Sintered Disc Type Downstream/upstream micron size 35/65 is standard. 5/10 or 10/35 also available when specified. Other element combinations available on special order.

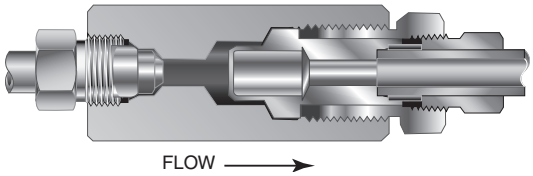

SWF Series Cup Type Line Filters

High Flow Cup-Type Line Filters are recommended in low pressure systems requiring both high flow rates and maximum filter surface area. Widely used in the industrial and chemical processing fields, the cup design offers as much as six times the effective filter area as compared to disc-type units. In addition, the filter elements can be quickly and easily replaced.

Materials:
Body, Cover, and Gland Nut - CW 316 Stainless Steel.

Filter Element: 316L Stainless Steel, Sintered Cup Type. Standard elements available in choice of 5, 35 or 65 micron sizes. **Note:** Filter ratings are nominal.

Spare Parts: Filter Elements are only replaceable part with either filter type. See chart on page 14 for Filter Element part numbers.

Temperature Range: Both Models -100° to 650°F (-73° to 343°C). (See "Technical Brochure" for Pressure/Temperature effect on temperatures above ambient.)

NOTE 1: All filters furnished complete with connection components unless otherwise specified. All dimensions for reference only and subject to change. For optional materials, see Needle Valve Options section

NOTE 2: Parker Autoclave Engineers disc and cup type filters are designed to filter small amounts of process particles. It is recommended that all fluids are thoroughly cleaned prior to entering the higher pressure system.

NOTE 3: Special material filters are normally supplied with four flats in place of standard hex.

NOTE 4: Pressure differential not to exceed 1,000 psi (69 bar) in a flowing condition. Filter replacement is recommended.

NOTE 5: Larger micron size filter element is installed on the upstream (inlet) side.

SLF Dual Disc Line Filters

Catalog Number	Pressure Rating psi (bar)*	Orifice inches (mm)	Micron Size**	Replacement Filters P/N	Connection Size and Type	Effective Filter Elements Area in^2 (mm^2)	Dimensions - inches (mm)				
							A	B	C	D Typical	Hex
SLF2200	15,000 (1034)	.094 (2.39)	35/65	65um=P-0562 35um=P-0870 10um=P-1750 5um=P-1749	W125	.06 (38.70)	2.31 (58.67)	1.25 (31.75)	0.31 (7.87)	0.38 (9.6)	0.62 (15.74)
SLF2200-5/10			5/10								
SLF2200-10/35			10/35								
SLF4400	15,000 (1034)	.125 (3.18)	35/65	65um=P-0650 35um=P-0805 10um=P-1785 5um=P-1650	SW250	.15 (96.77)	2.94 (75.56)	1.68 (42.67)	0.44 (11.17)	0.63 (15.88)	0.81 (20.57)
SLF4400-5/10			5/10								
SLF4400-10/35			10/35								
SLF6600	15,000 (1034)	.188 (4.78)	35/65	65um=P-0650 35um=P-0805 10um=P-1785 5um=P-1650	SW375	.15 (96.77)	2.94 (75.56	1.68 (42.67)	0.53 (13.46)	0.75 (19.05)	1.00 (25.40)
SLF6600-5/10			5/10								
SLF6600-10/35			10/35								
SLF8800	10,000 (689)	.250 (6.35)	35/65	65um=P-0764 35um=P-0794 10um=P-1784 5um=P-1783	SW500	.25 (161.29)	3.56 (90.42)	1.94 (49.27)	0.53 (13.46)	0.93 (23.62)	1.18 (29.97)
SLF8800-5/10			5/10								
SLF8800-10/35			10/35								

SWF Cup Type Line Filters

SWF4-5	15,000 (1034)	.188 (4.78)	5	201A-2916	SW250	.81 (522.57)	3.18 (80.77)	2.56 (65.02)	0.44 (11.17)	0.63 (15.88)	0.81 (20.57)
SWF4-35			35	203A-2916							
SWF4-65			65	204A-2916							
SWF6-5	15,000 (1034)	.312 (7.92)	5	201A-2916	SW375	.81 (522.57)	3.56 (90.42)	3.00 (76.20)	0.53 (13.46)	0.75 (19.05)	1.00 (25.40)
SWF6-35			35	203A-2916							
SWF6-65			65	204A-2916							
SWF8-5	10,000 (689)	.438 (11.13)	5	205A-2916	SW500	1.53 (987.09)	3.18 (80.77)	2.56 (65.02)	0.53 (13.46	0.93 (23.62)	1.38 (35.05)
SWF8-35			35	207A-2916							
SWF8-65			65	208A-2916							

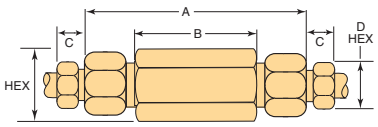

SLF Dual Disc Line Filters

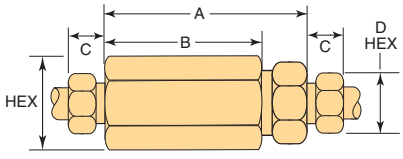

SWF Cup Type Line Filters

** Larger micron size filter element is installed on upstream (inlet) side. All filters furnished complete with connection components unless otherwise specified.

Other micron sizes available on special order. Change last digits of the catalog number accordingly. For optional materials, see Needle Valve Options section.

*Maximum pressure rating is based on the lowest rating of any component.
Actual working pressure may be determined by tubing pressure rating, if lower.
All dimensions for reference only and subject to change.

For connection make-up instructions see “Tools and Installation” brochure.

Tel: +45 63 12 83 00 | Email: ps@hymatik.com | www.hymatik.com | Hvidkaervej 27a, DK-5250 Odense SV, Denmark

Fittings and Tubing

Medium Pressure Cone & Thread

Pressures to 20,000 psi (1379 bar)
Includes Check Valves, Filters & Couplings



Principle of Operation:

Parker Autoclave Engineers Medium Pressure Cone and Thread connections were created for those applications that require higher flow rate capability. Designed for a maximum of 20,000 psi MAWP using high tensile strength cold worked 316 Stainless Steel material as standard. In addition we offer even larger ID tubing de-rated to 15,000 psi for maximum flow rate capability. This Medium Pressure series has all the benefits of the High-Pressure version with all metal sealing, temperature ranges from -423° to 1200°F (-252° to 650°C), and includes many different material options like 2507 Super Duplex, Hastelloy C276, 6Mo (25-4SMO), and Inconel 625 to mention just a few.

Fittings and tubing found in this section are designed using ASME B31.3 Chapter IX standards to be compatible with our 15SM & 20SM, 20DBNV, 20DV Needle Valves, and all of our various ball valve configurations including Subsea. There is a Parker Instrumentation fitting for just about any application of fluids under extreme pressure and/or temperature condition.

Medium Pressure Fittings and Tubing Features:

- Utilize “SF” Style High Flow Medium Pressure Coned-and-Threaded connections (see Tools and Installation for typical port dimensions)
- Available sizes are 1/4", 3/8", 9/16", 3/4", 1" and 1-1/2"
- Standard Fitting Material is UNS S31600 withTubing manufactured using UNS S31600/S31603, 316/316L stainless steel material, cold worked to Parker Autoclave proprietary standards
- Operating Temperatures from -423° to 1200°F (-252° to 650°C)
- Anti-vibration connection components available, see page 15
- Special materials available when corrosion, temperature, or NACE/ISO 15156 requirements demand. (See Technical Catalog)

All Parker Autoclave Engineers fittings are marked with manufacturers name, part number, material, heat code and maximum pressure for complete traceability.

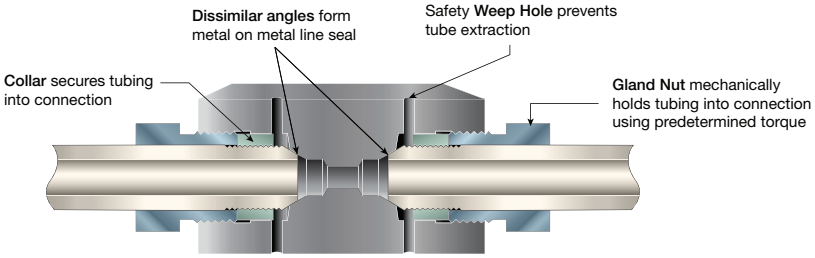

Medium Pressure “Slimline” Design
Collar in front of gland, keeping port size and fitting width to minimum

ENGINEERING YOUR SUCCESS.

Tel: +45 63 12 83 00 | Email: ps@hymatik.com | www.hymatik.com | Hvidkaervej 27a, DK-5250 Odense SV, Denmark

Fittings

Medium Pressure Fittings - Pressures to 20,000 psi (1379 bar)



Parker Autoclave Engineers Medium Pressure fittings, nicknamed "Slimline SF", are designed for use with SM Series valves and Parker Autoclave Engineers' Medium Pressure tubing. They incorporate coned-and-threaded connections with the orifice sized to match the high-flow 15,000 psi tubing options shown later in this brochure. For instructions on how to make this Medium Pressure Cone & Thread connection and the tools necessary to accomplish, see our "Tools and Installation" brochure.

(See "Technical Brochure" for Pressure/Temperature effect on temperatures above ambient.)

Connection Components:

All valves and fittings are supplied complete with appropriate gland and tubing collar. To order these components separately, use part numbers listed below. When using plug, collar is not required. Tubing Pressure Caps can be found in Adapter brochure.

Gland*
CGLX ( )

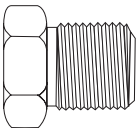

Collar
CCLX ( )



Plug
CPX ( )

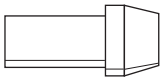

Socket Head Flush Plug version, add "**-F**" suffix

Add tube size code ( )
1/4" - 40
3/8" - 60
9/16" - 90
3/4" - 120
1" - 160
1-1/2" - 240

Example: 1/4" Gland - CGLX40

All Cone and Thread ports MUST utilize weep holes for safety. When weep hole is not available, we offer a gland nut with a "Slotted Male Thread" that provides this safety feature without the need for the separate port. Use suffix **-SMT** with Gland part number when needed.

To ensure proper fit use Parker Autoclave Engineers tubing.

Special Materials:

Note: Special Material Fittings are supplied with CW 316 SS Glands and Collars as these parts do not touch flowing (wetted) media. To match the same material as selected for body, use either "**-SOG**" (Sour Oil or Gas - NACE) or "**-AP**" ("All Parts" (does not get hardness check typical of **-SOG** option)) suffix. Special material glands and adapter bodies are normally supplied with four flats (square) in place of standard hex. Include option suffix "**-H**" if hex is required.

For gland nut hex sizes and torque values, see "Tools and Installation" brochure. (See "Special Materials" torque chart for all materials other than CW 316 SS). *To order Antivibration Gland Fitting see page 15

NACE/ISO 15156 Compatibility

All PAE Medium Pressure Fittings and Tubing can be made with materials suitable for NACE/ISO 15156 requirements. As per NACE and ISO-15156, it is contingent on the end user to select this material. As this compatibility limits the use of "cold worked" materials, most of the choices except for 2507 Super Duplex come with significant pressure reductions. Please consult our Technical Brochure where we identify the more popular annealed materials along with the pressure reduction. Our Sour Oil and Gas brochure has a more complete description of the available options for pressures up to 30,000 psi.

NACE Suffix adder options:

"**-SOG**" suffix converts all pressure containing parts from cold worked 3166 SS to annealed condition material, requires hardness check, and NACE certificate is generated for each part. Pressure reductions of 60% (8,000 psi)are possible. Contact factory for other pressure/material options.

"**-SOG10**" suffix is the same as above but generates a part with thicker body capable of 10,000 psi MAWP (Used only with 316/316L Material)

Tel: +45 63 12 83 00 | Email: ps@hymatik.com | www.hymatik.com | Hvidkaervej 27a, DK-5250 Odense SV, Denmark

90° Elbow: 45° Elbows are available, replace 00 with 45 (ie; CLX6645 or CLX1645)

Catalog Number	Connection Type	Outside Diameter Tube	Pressure Rating psi (bar)*	Orifice inches (mm)	Dimensions - inches (mm)						Block Thickness
					A	B	C	D Typical	E	F	
CLX4400	SF250CX (1/4" MP)	1/4 (6.35)	20,000 (1379)	.125 (3.18)	1.12 (28.45)	1.50 (38.10)	0.38 (9.53)	0.50 (13)	0.75 (19.05)	0.75 (19.05)	0.62 (15.75)
CLX6600	SF375CX (3/8" MP)	3/8 (9.53)	20,000 (1379)	.219 (5.56)	1.38 (35.05)	2.00 (50.80)	0.44 (11.18)	0.62 (16)	1.00 (25.40)	1.00 (25.40)	0.75 (19.05)
CLX9900	SF562CX (9/16" MP)	9/16 (14.29)	20,000 (1379)	.359 (9.12)	1.75 (44.45)	2.50 (63.50)	0.53 (13.46)	0.94 (24)	1.25 (31.75)	1.25 (31.75)	1.00 (25.40)
CLX12	SF750CX (3/4" MP)	3/4 (19.05)	20,000 (1379)	.516 (13.11)	2.25 (57.15)	3.00 (76.20)	0.62 (15.75)	1.19 (30)	1.50 (38.10)	1.50 (38.10)	1.38 (34.93)
CLX16	SF1000CX (1" MP)	1 (25.40)	20,000 (1379)	.688 (17.48)	3.00 (76.20)	4.12 (104.65)	0.72 (18.29)	1.38 (35)	2.06 (52.32)	2.06 (52.32)	1.75 (44.45)
CLX24	SF1500CX (1-1/2" MP)	1-1/2 (38.10)	15,000 (1034)	.938 (23.80)	4.00 (101.60)	5.75 (146.05)	1.12 (28.45)	1.88 (48)	2.88 (73.03)	2.88 (73.03)	2.25 (57.15)

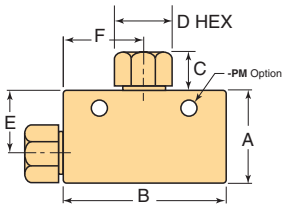

Elbow

*Maximum pressure rating is based on the lowest rating of any component. Actual working pressure may be determined by tubing pressure rating, if lower.
All dimensions for reference only and subject to change.

For prompt service, Parker Autoclave Engineers stocks select products. Consult your local representative.

For mounting hole option add suffix **-PM** to catalog number. Consult factory for mounting hole dimensions. For Connection Torque requirements please see "Tools and Installation" brochure.

Conversion Adapters can be found in our “Adapter” brochure found further in main catalog or on our website.

Tee

Catalog Number	Connection Type	Outside Diameter Tube	Pressure Rating psi (bar)*	Orifice inches (mm)	Dimensions - inches (mm)						Block Thickness
					A	B	C	D Typical	E	F	
CTX4440	SF250CX (1/4" MP)	1/4 (6.35)	20,000 (1379)	.125 (3.18)	1.12 (28.45)	1.50 (38.10)	0.38 (9.53)	0.50 (13)	0.75 (19.05)	0.75 (19.05)	0.62 (15.75)
CTX6660	SF375CX (3/8" MP)	3/8 (9.53)	20,000 (1379)	.219 (5.56)	1.38 (35.05)	2.00 (50.80)	0.44 (11.18)	0.62 (16)	1.00 (25.40)	1.00 (25.40)	0.75 (19.05)
CTX9990	SF562CX (9/16" MP)	9/16 (14.29)	20,000 (1379)	.359 (9.12)	1.75 (44.45)	2.50 (63.50)	0.53 (13.46)	0.94 (24)	1.25 (31.75)	1.25 (31.75)	1.00 (25.40)
CTX12	SF750CX (3/4" MP)	3/4 (19.05)	20,000 (1379)	.516 (13.11)	2.25 (57.15)	3.00 (76.20)	0.62 (15.75)	1.19 (30)	1.50 (38.10)	1.50 (38.10)	1.38 (34.93)
CTX16	SF1000CX (1" MP)	1 (25.40)	20,000 (1379)	.688 (17.48)	3.00 (76.20)	4.12 (104.65)	0.72 (18.29)	1.38 (35)	2.06 (52.32)	2.06 (52.32)	1.75 (44.45)
CTX24	SF1500CX (1-1/2" MP)	1-1/2 (38.10)	15,000 (1034)	.938 (23.80)	4.00 (101.60)	5.75 (146.05)	1.12 (28.45)	1.88 (48)	2.88 (73.03)	2.88 (73.03)	2.25 (57.15)

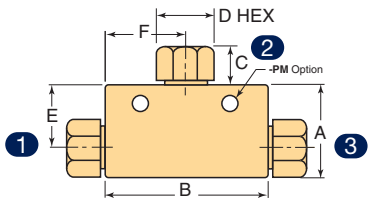

Tee

*Maximum pressure rating is based on the lowest rating of any component.
Actual working pressure may be determined by tubing pressure rating, if lower. All dimensions for reference only and subject to change.

For mounting hole option add suffix **-PM** to catalog number. Consult factory for mounting hole dimensions. To order Tee with different size connections of same type, change part number size codes using order shown in drawing, ie: CTX91290 would build Tee with 3/4" MP branch and 9/16" MP runs. For Connection Torque requirements please see “Tools and Installation” brochure.

Conversion Adapters can be found in our “Adapter” brochure found further in main catalog or on our website.

Tel: +45 63 12 83 00 | Email: ps@hymatik.com | www.hymatik.com | Hvidkaervej 27a, DK-5250 Odense SV, Denmark

Cross

Catalog Number	Connection Type	Outside Diameter Tube	Pressure Rating psi (bar)*	Orifice inches (mm)	Dimensions - inches (mm)						Block Thick-ness
					A	B	C	D Typical	E	F	
CXX4444	SF250CX (1/4" MP)	1/4 (6.35)	20,000 (1379)	.125 (3.18)	1.50 (38.10)	1.50 (38.10)	0.38 (9.53)	0.50 (13)	0.75 (19.05)	0.75 (19.05)	0.62 (15.75)
CXX6666	SF375CX (3/8" MP)	3/8 (9.53)	20,000 (1379)	.219 (5.56)	2.00 (50.80)	2.00 (50.80)	0.44 (11.18)	0.62 (16)	1.00 (25.40)	1.00 (25.40)	0.75 (19.05)
CXX9999	SF562CX (9/16" MP)	9/16 (14.29)	20,000 (1379)	.359 (9.12)	2.50 (63.50)	2.50 (63.50)	0.53 (13.46)	0.94 (24)	1.25 (31.75)	1.25 (31.75)	1.00 (25.40)
CXX12	SF750CX (3/4" MP)	3/4 (19.05)	20,000 (1379)	.516 (13.11)	3.00 (76.20)	3.00 (76.20)	0.62 (15.75)	1.19 (30)	1.50 (38.10)	1.50 (38.10)	1.38 (34.93)
CXX16	SF1000CX (1" MP)	1 (25.40)	20,000 (1379)	.688 (17.48)	4.12 (104.65)	4.12 (104.65)	0.72 (18.29)	1.38 (35)	2.06 (52.32)	2.06 (52.32)	1.75 (44.45)
CXX24	SF1500CX (1-1/2" MP)	1-1/2 (38.10)	15,000 (1034)	.938 (23.80)	5.75 (146.05)	5.75 (146.05)	1.12 (28.45)	1.88 (48)	2.88 (73.03)	2.88 (73.03)	2.25 (57.15)

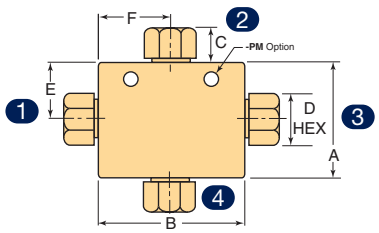

Cross

*Maximum pressure rating is based on the lowest rating of any component. Actual working pressure may be determined by tubing pressure rating, if lower. All dimensions for reference only and subject to change.

For prompt service, Parker Autoclave Engineers stocks select products. Consult your local representative.

For mounting hole option add suffix -**PM** to catalog number. Consult factory for mounting hole dimensions. To order Cross with different size connections of same type, change part number size codes using order shown in drawing, ie: CXX6969 would build a Cross with 9/16" MP alternating with 3/8" MP. For Connection Torque requirements please see "Tools and Installation" brochure.

Conversion Adapters can be found in our "Adapter" brochure found further in main catalog or on our website.

Bulkhead Coupling

Catalog Number	Connection Type	Outside Diameter Tube	Pressure Rating psi (bar)*	Orifice inches (mm)	Dimensions - inches (mm)						
					A	B	C	D Typical	E	F	G Thickness
20BFX4466	SF250CX (1/4" MP)	1/4 (6.35)	20,000 (1379)	.125 (3.18)	0.81 (20.57)	1.88 (47.75)	0.38 (9.53)	0.50 (13)	0.53 (13.46)	1.00 (25.40)	0.38 (9.53)
20BFX6666	SF375CX (3/8" MP)	3/8 (9.53)	20,000 (1379)	.219 (5.56)	0.94 (23.88)	2.00 (50.80)	0.44 (11.18)	0.62 (16)	0.62 (15.75)	1.00 (25.40)	0.38 (9.53)
20BFX9966	SF562CX (9/16" MP)	9/16 (14.29)	20,000 (1379)	.359 (9.12)	1.12 (28.45)	2.38 (60.45)	0.53 (13.46)	0.94 (24)	0.78 (19.81)	1.38 (35.05)	0.38 (9.53)
20BFX12	SF750CX (3/4" MP)	3/4 (19.05)	20,000 (1379)	.516 (13.11)	1.69 (42.93)	2.62 (66.55)	0.62 (15.75)	1.19 (30)	0.91 (23.11)	1.88 (47.75)	0.38 (9.53)
20BFX16	SF1000CX (1" MP)	1 (25.40)	20,000 (1379)	.688 (17.48)	1.94 (49.28)	3.50 (88.90)	0.72 (18.29)	1.38 (35)	1.50 (38.10)	1.88+ (47.75)	0.38 (9.53)
15BFX24	SF1500CX (1-1/2" MP)	1-1/2 (38.10)	15,000 (1034)	.938 (23.80)	2.44 (61.85)	5.00 (127.00)	1.12 (28.45)	1.88 (48)	2.00 (50.80)	2.50+ (63.50)	0.38 (9.53)

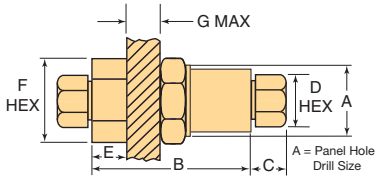

Bulkhead Coupling

*Maximum pressure rating is based on the lowest rating of any component. Actual working pressure may be determined by tubing pressure rating, if lower.

+ distance across flats

All dimensions for reference only and subject to change. For Connection Torque requirements please see "Tools and Installation" brochure. For prompt service, Parker Autoclave Engineers stocks select products. Consult your local representative.

Conversion Adapters can be found in our "Adapter" brochure found further in main catalog or on our website.

Tel: +45 63 12 83 00 | Email: ps@hymatik.com | www.hymatik.com | Hvidkaervej 27a, DK-5250 Odense SV, Denmark

Straight Coupling / Union Coupling

Catalog Number	Connection Type	Outside Diameter Tube	Pressure Rating psi (bar)*	Orifice inches (mm)	Dimensions - inches (mm				Coupling Type
					A	B	C	D Typical	
20FX4466 20UFX4466	SF250CX (1/4" MP)	1/4 (6.35)	20,000 (1379)	.125 (3.18)	0.62 (15.75)	1.62 (41.15)	0.38 (9.53)	0.50 (130)	Straight Union
20FX6666 20UFX6666	SF375CX (3/8" MP)	3/8 (9.53)	20,000 (1379)	.219 (5.56)	0.75 (19.05)	1.75 (44.45)	0.44 (11.18)	0.62 (16)	Straight Union
20FX9966 20UFX9966	SF562CX (9/16" MP)	9/16 (14.29)	20,000 (1379)	.359 (9.12)	1.13 (28.70)	2.12 (53.85)	0.53 (13.46)	0.94 (24)	Straight Union
20FX12 20UFX12	SF750CX (3/4" MP)	3/4 (19.05)	20,000 (1379)	.516 (13.11)	1.38 (35.05)	2.50 (63.50)	0.62 (15.75)	1.19 (30)	Straight Union
20FX16 20UFX16	SF1000CX (1" MP)	1 (25.40)	20,000 (1379)	.688 (17.48)	1.75 (44.45)	3.50 (88.90)	0.72 (18.29)	1.38 (35)	Straight Union
15FX24 15UFX24	SF1500CX (1-1/2" MP)	1-1/2 (38.10)	15,000 (1034)	.938 (23.80)	2.25 (25.15)	5.00 (127.00)	1.12 (28.45)	1.88 (48)	Straight Union

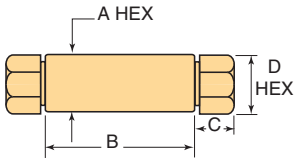

Straight Coupling / Union Coupling

*Maximum pressure rating is based on the lowest rating of any component. Actual working pressure may be determined by tubing pressure rating, if lower.

All dimensions for reference only and subject to change.
For prompt service, Parker Autoclave Engineers stocks select products. Consult your local representative.

For Connection Torque requirements please see "Tools and Installation" brochure.

Conversion Adapters can be found in our "Adapter" brochure found further in main catalog or on our website.

Union Coupling Assembly

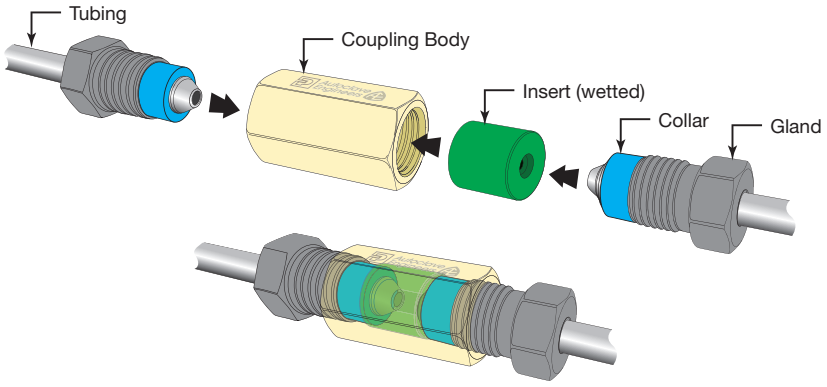

Assembled Union Coupling

Union vs. Straight Coupling Comparison

In much the same as with a traditional Pipe Union, the PAE Union Coupling is used to easily disassemble tubing runs when valves or fittings need to be replaced after original installation. The Body and Insert are two different pieces in the same assembly. The body can slide down tubing leaving only the insert and the tubing tips engaged. Then with only minimal tube shift, the insert drops out allowing the tubing to be removed avoiding the need to disassemble multiple tubing sections from closest elbow.

Note: When Special Materials are requested, the only material that is changed is the Insert (wetted). If "All Parts" are to be requested, include suffix "**-AP**" or "**-SOG**" if for NACE/ISO 15156.

Tel: +45 63 12 83 00 | Email: ps@hymatik.com | www.hymatik.com | Hvidkaervej 27a, DK-5250 Odense SV, Denmark

Tubing

Medium Pressure Tubing - Pressures to 20,000 psi (1379 bar)



Parker Autoclave Engineers offers a complete selection of austenetic, cold drawn stainless steel tubing designed to match the performance standards of Parker Autoclave valves and fittings. Parker Autoclave Engineers medium pressure tubing is manufactured specifically for high pressure applications requiring both strength and corrosion resistance. The tubing is furnished in random lengths between 20 feet (6 meters) and 26.5 feet (8.0 meters). The average is 24 feet (7.3 meters). Medium Pressure Tubing is available in six sizes and a variety of materials. All Parker Autoclave Engineers manufactured tubing is line marked repeatedly along the full length with our name, country of origin, Heat number, PO number, tube dimensions (Nominal OD and ID), PAE Part Number, Manufacturing Specification, and Pressure Rating (MAWP @ Room Temp).

Inspection and Testing:

Parker Autoclave Engineers' medium pressure tubing is inspected to assure freedom from seams, laps, fissures or other flaws, as well as carburization or intergranular carbide precipitation. The outside and inside diameters of the tubing are subject to special inspection and are controlled within close tolerences to assure proper fit. Sample pieces of tube for each lot are tested to confirm mechanical properties. Hydrostatic testing is also performed on a statistical basis and is conducted at the working pressure of the tube. Parker Autoclave will perform 100% hydrostatic testing at additional cost if desired.

Special Material:

In addition to the most commonly requested tubing materials CW 316 SS, 2507 Super Duplex*, and Inconel 625* (specifications on next page), we have other options outlined in our Technical brochure. These include NACE/ ISO 15156 capable materials for a variety of corrosive applications.

(See “Technical Brochure” for Pressure/Temperature effect on temperatures above ambient.)

Note: * Trademark names, Please consult factory for stock availabilty.

Tubing Tolerance:

Parker Autoclave Engineers tubing is made to specifications that exceed all others as part of a complete “system” of products that have your safety always in mind. The outside dimension of this tubing is intentionally “undersized” to match the requirements of the threading die used to put the connection thread on the tubing. See actual dimensions and tolerancing below:

Nominal Tubing Size inches (mm)	Tolerance/Outside Diameter inches (mm)
1/4 (6.35)	.248/.243 (6.30/6.17)
3/8 (9.53)	.370/.365 (9.40/9.27)
9/16 (14.27)	.557/.552 (14.15/14.02)
3/4 (19.05)	.745/.740 (18.92/18.80)
1 (25.40)	.995/.990 (25.27/25.14)
1-1/2 (38.10)	1.495/1.490 (37.98/37.85)

Note:
Standard Tubing is manufactured in accordance with ASME B31.3 Chapter IX standards using UNS S31600/S31603, 316/316L Stainless Steel material, cold worked to Parker Autoclave proprietary standards.

Tubing outside diameter dimensions do not meet standard commercial tubing tolerances. Tubing outside dimensions are specifically chosen to meet tube threading die requirements.

Parker Autoclave Engineers components and tubing are designed as a “complete system” for safety and our fittings will not be compatible with standard "commercial" tubing.

Tel: +45 63 12 83 00 | Email: ps@hymatik.com | www.hymatik.com | Hvidkaervej 27a, DK-5250 Odense SV, Denmark

Tubing Details: **316/316L, UNS S31600/S31603 Stainless Steel** (Cold Worked)

Catalog Number	Tube Material	Fits Connection Type	Tube Size inches (mm)			Flow Area in^2 (mm^2)	Working Pressure psi (bar)*			
			Outside Diameter	Inside Diameter	Wall Thickness		-423 to 100°F (-252 to 38°C)	200°F (93°C)	400°F (204°C)	600°F (316°C)
MS15-092	316SS	SF250CX	1/4 (6.35)	0.109 (2.77)	.070 (1.78)	0.009 (5.81)	20,000 (1379)	20,000 (1379)	19,000 (1310)	18,000 (1241)
MS15-093	316SS	SF375CX	3/8 (9.53)	0.203 (6.16)	.086 (2.18)	0.032 (20.66)	20,000 (1379)	20,000 (1379)	19,000 (1310)	18,000 (1241)
MS15-097	316SS	SF562CX	9/16 (14.29)	0.359 (9.12)	.101 (2.57)	.101 (65.16)	15,000 (1034)	15,000 (1034)	14,200 (979)	13,500 (931)
MS15-085	316SS			0.312 (7.92)	.125 (3.18)	.076 (49.03)	20,000 (1379)	20,000 (1379)	19,000 (1310)	18,000 (1241)
MS15-098	316SS	SF750CX	3/4 (19.06)	0.516 (13.11)	.117 (2.97)	.209 (134.84)	15,000 (1034)	15,000 (1034)	14,200 (979)	13,500 (931)
MS15-095	316SS			0.438 (11.13)	.156 (3.96)	0.151 (97.42)	20,000 (1379)	20,000 (1379)	19,000 (1310)	18,000 (1241)
MS15-099	316SS	SF1000CX	1 (25.40)	0.688 (17.48)	.156 (3.96)	.371 (239.36)	15,000 (1034)	15,000 (1034)	14,200 (979)	13,500 (931)
MS15-096	316SS			0.556 (14.27)	.219 (6.66)	0.248 (160.00)	20,000 (1379)	20,000 (1379)	19,000 (1310)	18,000 (1241)
13041	316SS	SF1500CX	1-1/2 (38.10)	0.937 (23.80)	0.281 (7.14)	0.689 (444.88)	15,000 (1034)	15,000 (1034)	14,200 (979)	13,500 (931)

Tubing Details: **2507 Super Duplex, UNS S32750** (Annealed - meets NACE/ISO 15156 & NORSOK M650, must use **-S0G** suffix for NACE conformance certificate

Catalog Number	Tube Material	Fits Connection Type	Tube Size inches (mm)			Flow Area in^2 (mm^2)	Working Pressure psi (bar)*			
			Outside Diameter	Inside Diameter	Wall Thickness		-50° to 100°F (-45° to 38°C)	200°F (93°C)	400°F (204°C)	600°F (316°C)
MS15-503	2507	SF250CX	1/4 (6.35)	0.109 (2.77)	.070 (1.78)	0.009 (5.81)	20,000 (1379)	17,500 (1207)	15,200 (1048)	14,400 (993)
MS15-504	2507	SF375CX	3/8 (9.53)	0.203 (6.16)	.086 (2.18)	0.032 (20.66)	20,000 (1379)	17,500 (1207)	15,200 (1048)	14,400 (993)
MS15-500	2507	SF562CX	9/16 (14.29)	0.359 (9.12)	.101 (2.57)	0.101 (65.16)	15,000 (1034)	13,200 (910)	11,400 (786.0)	10,500 (724.05)
MS15-505	2507			0.312 (7.92)	.125 (3.18)	0.076 (49.03)	20,000 (1379)	17,500 (1207)	15,200 (1048)	14,400 (993)
MS15-501	2507	SF750CX	3/4 (19.06)	0.516 (13.11)	0.017 (2.97)	0.209 (134.84)	15,000 (1034)	13,200 (910)	11,400 (786.0)	10,500 (724.05)
MS15-506	2507			0.438 (11.13)	0.156 (3.96)	0.151 (97.42)	20,000 (1379)	17,500 (1207)	15,200 (1048)	14,400 (993)
MS15-502	2507	SF1000CX	1 (25.40)	0.688 (17.48)	0.156 (3.96)	0.371 (239.36)	15,000 (1034)	13,200 (910)	11,400 (786.0)	10,500 (724.05)
MS15-507	2507			0.562 (14.27)	0.219 (5.56)	0.248 (160.00)	20,000 (1379)	17,500 (1207)	15,200 (1048)	14,400 (993)
MS15-509	2507	SF1500CX	1-1/2 (38.10)	0.937 (23.79)	.281 (7.13)	0.689 (444.88)	15,000 (1034)	13,200 (910)	11,400 (786.0)	10,500 (724.05)

Tubing Details: **Inconel 625®, UNS N06625** (Annealed - meets NACE/ISO 15156, must use **-S0G** suffix for NACE conformance certificate

Catalog Number	Tube Material	Fits Connection Type	Tube Size inches (mm)			Flow Area in^2 (mm^2)	Working Pressure psi (bar)*			
			Outside Diameter	Inside Diameter	Wall Thickness		-423 to 100°F (-252 to 38°C)	200°F (93°C)	400°F (204°C)	600°F (316°C)
13234	IN625	SF250CX	1/4 (6.35)	0.109 (2.77)	.070 (1.78)	0.009 (5.81)	15,000 (1034)	14,100 (972)	13,600 (938)	12,800 (883)
13062	IN625	SF375CX	3/8 (9.53)	0.203 (6.16)	.086 (2.18)	0.032 (20.66)	15,000 (1034)	14,100 (972)	13,600 (938)	12,800 (883)
13233	IN625	SF562CX	9/16 (14.29)	0.312 (7.92)	.125 (3.18)	0.076 (49.03)	15,000 (1034)	14,100 (972)	13,600 (938)	12,800 (883)
13232	IN625	SF750CX	3/4 (19.06)	0.438 (11.13)	0.156 (3.96)	0.151 (97.42)	15,000 (1034)	14,100 (972)	13,600 (938)	12,800 (883)
13231	IN625	SF1000CX	1 (25.40)	0.562 (14.28)	0.219 (5.56)	0.248 (160.00)	15,000 (1034)	14,100 (972)	13,600 (938)	12,800 (883)

Note:
Caution should be exercised in proper selection of Medium Pressure Tubing based on actual operating conditions. Two series available with some sizes: 15,000 psi (1034 bar) and 20,000 psi (1379 bar).

*Maximum pressure rating is based on the lowest rating of any component. Actual working pressure may be determined by tubing pressure rating, if lower.

See Technical Section for Temperature Ratings over 600°F (315°C)

All dimensions for reference only and subject to change. For prompt service, Parker Autoclave Engineers stocks select products. Consult your local representative.

Coned-and-Threaded Nipples

Medium Pressure - Pressures to 20,000 psi (1379 bar)



For rapid system make-up, Parker Autoclave Engineers supplies pre-cut, coned-and-threaded nipples in various sizes and lengths for Parker Autoclave Engineers Medium Pressure valves and fittings.

Special Lengths:

In addition to the standard lengths listed in the table below, nipples are available in any custom length up to total stick length. Consult factory.

Material:

Catalog numbers in table refer to Type UNS S31600/ S31603, CW 316/316L Stainless steel. Optional materials available. When changing material selection, replace -316 with replacement material suffix (-2507 for 2507 Super Duplex, -IN625 for Inconel 625). Consult Techncial Brochure for additional material options.

(See “Technical Brochure” for Pressure/Temperature effect on temperatures above ambient.)

Nipple Details:

Catalog Number *(316 Stainless Steel)*									
Tube Size inches (mm)	Fits Connection Type								
	SF250CX	SF375CX	SF562CX	SF562CX	SF750CX	SF750CX	SF1000CX	SF10000CX	SF1500CX
Outside Diameter	1/4 (6.35)	3/8 (9.53)	9/16 (14.29)	9/16 (14.29)	3/4 (19.05)	3/4 (19.05)	1 (25.40)	1 (25.40)	1-1/2 (38.10)
Inside Diameter	.109 (2.77)	.203 (5.16)	.359 (9.12)	.312 (7.92)	.516 (13.11)	.438 (11.13)	.688 (17.48)	.562 (14.27)	.937 (23.79)
Working Pressure at 100°F (38°C) psi (bar)*	20,000 (1379)	20,000 (1379)	15,000 (1034)	20,000 (1379)	15,000 (1034)	20,000 (1379)	15,000 (1034)	20,000 (1379)	15,000 (1034)
Nipple Length inches (mm)									
2.75" (69.85)	CNX4402 -316								
3.00" (76.20)	CNX4403 -316	CNX6603 -316							
4.00" (101.60)	CNX4404 -316	CNX6604 -316	CNLX9904 -316	CNX9904 -316	CNLX1204 -316	CNX1204 -316			
6.00" (152.40)	CNX4406 -316	CNX6606 -316	CNLX9906 -316	CNX9906 -316	CNLX1206 -316	CNX1206 -316	CNLX1606 -316	CNX1606 -316	CNLX2406 -316
8.00" (203.20)	CNX4408 -316	CNX6608 -316	CNLX9908 -316	CNX9908 -316	CNLX1208 -316	CNX1208 -316	CNLX1608 -316	CNX1608 -316	CNLX2408 -316
10.00" (254.00)	CNX44010 -316	CNX66010 -316	CNLX99010 -316	CNX99010 -316	CNLX12010 -316	CNX12010 -316	CNLX16010 -316	CNX16010 -316	CNLX24010 -316
12.00" (304.80)	CNX44012 -316	CNX66012 -316	CNLX99012 -316	CNX99012 -316	CNLX12012 -316	CNX12012 -316	CNLX16012 -316	CNX16012 -316	CNLX24012 -316
14.00" (355.60)	CNX44014 -316	CNX66014 -316	CNLX99014 -316	CNX99014 -316	CNLX12014 -316	CNX12014 -316	CNLX16014 -316	CNX16014 -316	CNLX24014 -316
16.00" (406.40)	CNX44016 -316	CNX66016 -316	CNLX99016 -316	CNX99016 -316	CNLX12016 -316	CNX12016 -316	CNLX16016 -316	CNX16016 -316	CNLX24016 -316
18.00" (457.20)	CNX44018 -316	CNX66018 -316	CNLX99018 -316	CNX99018 -316	CNLX12018 -316	CNX12018 -316	CNLX16018 -316	CNX16018 -316	CNLX24018 -316
20.00" (508.00)	CNX44020 -316	CNX66020 -316	CNLX99020 -316	CNX99020 -316	CNLX12020 -316	CNX12020 -316	CNLX16020 -316	CNX16020 -316	CNLX24020 -316
22.00" (558.80)	CNX44022 -316	CNX66022 -316	CNLX99022 -316	CNX99022 -316	CNLX12022 -316	CNX12022 -316	CNLX16022 -316	CNX16022 -316	CNLX24022 -316
24.00" (609.60)	CNX44024 -316	CNX66024 -316	CNLX99024 -316	CNX99024 -316	CNLX12024 -316	CNX12024 -316	CNLX16024 -316	CNX16024 -316	CNLX24024 -316

Notes:
Caution should be exercised when selecting medium pressure nipples since two series are available: 15,000 psi (1034 bar) and 20,000 psi (1379 bar)

See medium pressure tubing section for pressures at various temperatures.

*Maximum pressure rating is based on the lowest rating of any component. Actual working pressure may be determined by tubing pressure rating, if lower.

All dimensions for reference only and subject to change.

For Connection Torque requirements please see “Tools and Installation” brochure.

Tel: +45 63 12 83 00 | Email: ps@hymatik.com | www.hymatik.com | Hvidkaervej 27a, DK-5250 Odense SV, Denmark

Check Valves

Medium Pressure - Pressures to 20,000 psi (1379 bar)

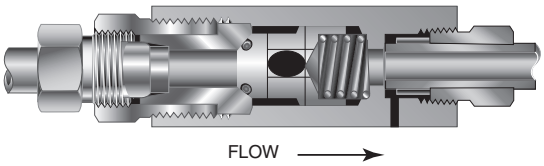

CXO Series O-Ring Check Valve

Ordering part numbers can be found on page 12

Provide unidirectional flow and tight shut-off for liquids and gases with high reliability. When differential drops below cracking pressure*, valve shuts off. (**Not for use as relief valve.**)

Cracking Pressure:

20 psi (1.38 bar) ±30%. Springs for higher cracking pressures up to 100 psi available on special order for O-ring style check valves only.

Temperature Range/O-ring Options:

Viton (FKM) O-ring (std.): 0° to 400°F (-18° to 204°C)
Buna-N O-ring (**-BO** suffix): -20° to 250°F (-29° to 121°C)
FFKM O-ring (**-KO** suffix): 0° to 500°F *(-18° to 260°C)
PTFE O-ring (**-TO** suffix): -100° to 400°F (-73° to 204°C)
PTFE O-ring with Low Temp Spring (**-LTTO** suffix): to -423°F (-252°C)

(See "Technical Brochure" for Pressure/Temperature effect on temperatures above ambient.)

Installation:

Vertical or Horizontal as required. Flow Direction arrow on valve body

CAUTION: While testing has shown O-Rings to provide satisfactory service life, both cyclic and shelf life may vary widely with differing service conditions, properties of reactants, pressure and temperature cycling and age of the O-ring. FREQUENT INSPECTIONS SHOULD BE MADE to detect any deterioration, and O-rings replaced as required.

NOTE: For optional material see Technical Brochure. Special material check valves are normally supplied with four flats in place of standard hex.

Material of Construction:

Item #	Description	Material
1	Check Valve Body	316 SS
2	Cover	316 SS
3	Poppet	316 SS
4	Gland Nut	316 SS
5	Spring	302 SS
6	O-Ring	90 Duro FKM

Typical spare parts found in Repair Kits

Basic O-ring Check Valve Repair Kits:

Check Valves are easily repaired. Add "**R**" to front of valve catalog number for proper repair kit (example: RCXO9900) See "Cover Torque" on page 12 for re-assembly. Include any catalog number suffix marked on original part when ordering repair kit.

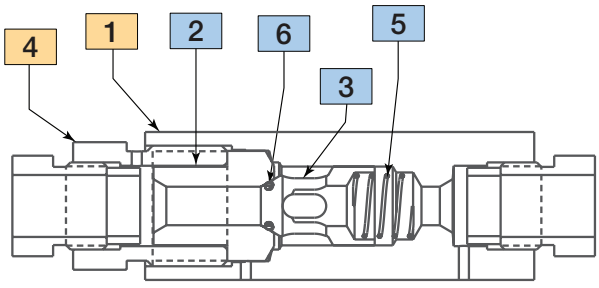

Tel: +45 63 12 83 00 | Email: ps@hymatik.com | www.hymatik.com | Hvidkaervej 27a, DK-5250 Odense SV, Denmark

Ball Check Valves

Medium Pressure - Pressures to 20,000 psi (1379 bar)

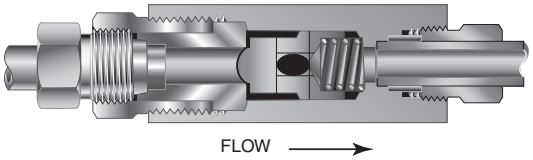

CXB Series Ball Check Valve

Ordering part numbers can be found on page 12

Prevent reverse flow **where leak-tight shut-off is not mandatory**. When differential drops below cracking pressure, valve closes. With all-metal components, valve can be used up to 800°F (425°C). See Technical Information section for connection temperature limitations. (**Not for use as relief valve.**)

Ball and poppet are an integral design to assure positive, in-line seating without "chatter". Poppet is designed for axial flow with minimum pressure drop.

Cracking Pressure:

20 psi (1.38 bar) +/- 30% No optional cracking pressures available.

Temperature Range:

With All-Metal components, valve can be used to 800°F (425°C). Minimum standard operating temperature is -110°F (-79°C). For Low Temperature operation to -423°F (-252°C) use suffix "**-LT**" (Low Temp Spring)

(See "Technical Brochure" for Pressure/Temperature effect on temperatures above ambient.)

Installation:

Vertical or Horizontal as required. Flow Direction arrow on valve body

NOTE: For optional material see Technical Brochure. Special material check valves are normally supplied with four flats in place of standard hex.

Material of Construction:

Item #	Description	Material
1	Gland	316 SS
2	Gland Nut	316 SS
3	Cover	316 SS
4	Poppet	316 SS
5	Spring	302 SS
6	Check Valve Body	316 SS

Typical spare parts found in Repair Kits

Basic Ball Check Valve Repair Kits:

Check Valves are easily repaired. Add "**R**" to front of valve catalog number for proper repair kit (example: RCXB9900) See "Cover Torque" on page 12 for re-assembly.

Include any catalog number suffix marked on original part when ordering repair kit.

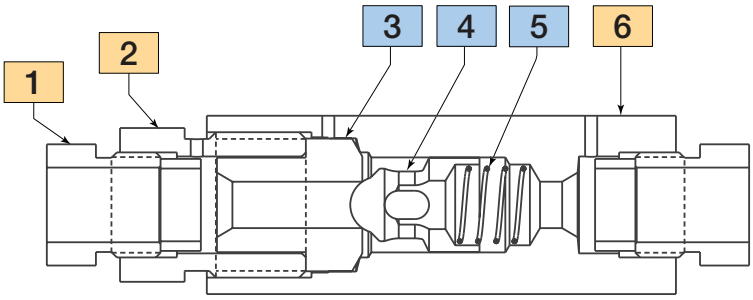

Tel: +45 63 12 83 00 | Email: ps@hymatik.com | www.hymatik.com | Hvidkaervej 27a, DK-5250 Odense SV, Denmark

Excess Flow Valves

Medium Pressure - Pressures to 20,000 psi (1379 bar)

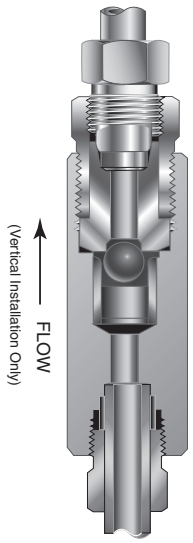

CXK Series Ball Type Excess Flow Valves (Surge Check)

Ordering part numbers can be found on page 12

Protects pressure gauges and pressure instrumentation from sudden surges in flow or venting in the event of line failure.

Vertical Installation: Since this type of check valve employs a non-spring loaded ball, valve MUST be installed in VERTICAL position with arrow on valve body pointing UP. (cover gland up).

Resetting Valve: Equalize the pressure across the ball. The ball will drop and reset automatically. Note: when in checked position, a small flow is permitted through the valve. See dimension chart on next page for checked flow rates).

Temperature Range:
With All-Metal components, Excess Flow Valve can be used from -423° to 800°F (-252° to 425°C).

(See "Technical Brochure" for Pressure/Temperature effect on temperatures above ambient.)

NOTE: For optional material see Needle Valve Options section. Special material check valves may be supplied with four flats in place of standard hex.

Material of Construction:

Item #	Description	Material
1	Gland Nut	316 SS
2	Cover	316 SS
3	Ball, 1/2" Diameter	302 SS
4	Sleeve	316 SS
5	Check Valve Body	316 SS

Typical spare parts found in Repair Kits

Excess Flow Valve Repair Kits

Excess Flow Valves are easily repaired. Add "**R**" to front of valve catalog number for proper repair kit (example: RCK9902) See "Cover Torque" on page 12 for re-assembly. Include any catalog number suffix marked on original part when ordering repair kit.

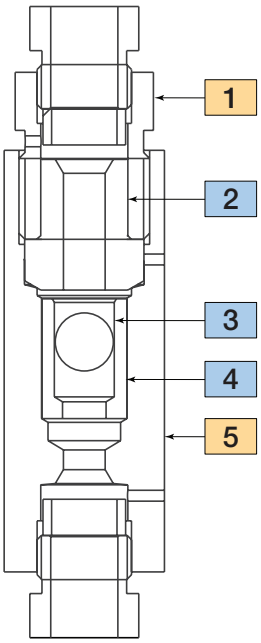

Tel: +45 63 12 83 00 | Email: ps@hymatik.com | www.hymatik.com | Hvidkaervej 27a, DK-5250 Odense SV, Denmark

O-Ring Check Valves

Catalog Number	Fits Connection Type	Pressure Rating psi (bar)*	Orifice inches (mm)	Rated Cv	Cover Torque ft.lb (Nm)	Dimensions - inches (mm)				
						A	B	C	D Typical	Hex
CXO4400	SF250CX (1/4" MP)	20,000 (1379)	.125 (3.18)	.28	40 (54)	2.94 (74.68)	2.50 (63.50)	0.38 (9.53)	0.50 (13)	0.81 (20.57)
CXO6600	SF375CX (3/8" MP)	20,000 (1379)	.218 (5.54)	.84	65 (88)	3.12 (79.25)	2.62 (66.55)	0.47 (11.94)	0.62 (16)	1.00 (25.40)
CXO9900	SF562CX (9/16" MP)	20,000 (1379)	.359 (9.12)	2.30	140 (190)	4.18 (106.17)	3.50 (88.90)	0.53 (13.46)	0.94 (24)	1.38 (35.05)
CXO12	SF750CX (3/4" MP)	20,000 (1379)	.516 (13.11)	4.70	230 (312)	5.50 (139.70)	4.75 (120.65)	0.62 (15.75)	1.19 (330)	1.75 (44.45)
CXO16	SF1000CX (1" MP)	20,000 (1379)	.688 (17.48)	7.40	700 (950)	6.63 (168.40)	5.75 (146.05)	0.72 (18.29)	1.38 (35)	1.88++ (47.75)
CXO24	SF1500CX (1-1/2" MP)	15,000 (1034)	.938 (23.80)	14.00	1500 (2033)	9.01 (228.85)	7.25 (184.15)	1.12 (28.45)	1.88 (48)	3.00++ (76.20)

Ball Check Valves

CXB4400	SF250CX (1/4" MP)	20,000 (1379)	.125 (3.18)	.28	40 (54)	2.94 (74.68)	2.50 (63.50)	0.38 (9.53)	0.50 (13)	0.81 (20.57)
CXB6600	SF375CX (3/8" MP)	20,000 (1379)	.218 (5.54)	.84	65 (88)	3.12 (79.25)	2.62 (66.55)	0.47 (11.94)	0.62 (16)	1.00 (25.40)
CXB9900	SF562CX (9/16" MP)	20,000 (1379)	.359 (9.12)	2.30	140 (190)	4.18 (106.17)	3.50 (88.90)	0.53 (13.46)	0.94 (24)	1.38 (35.05)
CXB12	SF750CX (3/4" MP)	20,000 (1379)	.516 (13.11)	4.70	230 (312)	5.50 (139.70)	4.75 (120.65)	0.62 (15.75)	1.19 (330)	1.75 (44.45)
CXB16	SF1000CX (1" MP)	20,000 (1379)	.688 (17.48)	7.40	700 (950)	6.63 (168.40)	5.75 (146.05)	0.72 (18.29)	1.38 (35)	1.88++ (47.75)
CXB24	SF1500CX (1-1/2" MP)	15,000 (1034)	.938 (23.80)	14.00	1500 (2033)	9.01 (228.85)	7.25 (184.15)	1.12 (28.45)	1.88 (48)	3.00++ (76.20)

Ball Type Excess Flow Valves

CXK4402	SF250CX (1/4" MP)	20,000 (1379)	.125 (3.18)	.037+	40 (54)	2.94 (74.68)	2.50 (63.50)	0.38 (9.53)	0.50 (13)	0.81 (20.57)
CXK6602	SF375CX (3/8" MP)	20,000 (1379)	.218 (5.54)	.066+	65 (88)	3.12 (79.25)	2.62 (66.55)	0.47 (11.94)	0.62 (16)	1.00 (25.40)
CXK9902	SF562CX (9/16" MP)	20,000 (1379)	.359 (9.12)	.212+	140 (190)	4.18 (106.17)	3.50 (88.90)	0.53 (13.46)	0.94 (24)	1.38 (35.05)
CXK1202	SF750CX (3/4" MP)	20,000 (1379)	.516 (13.11)	.368+	230 (312)	5.12 (130.05)	4.38 (111.25)	0.62 (15.75)	1.19 (330)	1.75 (44.45)
CXK1602	SF1000CX (1" MP)	20,000 (1379)	.688 (17.48)	.864+	700 (950)	6.50 (165.10)	5.62 (142.75)	0.72 (18.29)	1.38 (35)	1.88++ (47.75)

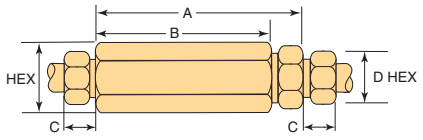

Check and Excess Flow Valve Dimensions

NOTE: For optional material see Technical Brochure. Special material check valves are normally supplied with four flats in place of standard hex.

Note:
+ Check Flow - water, GPM
++ Distance across flats

* Maximum pressure rating is based on the lowest rating of any component. Actual working pressure may be determined by tubing pressure rating, if lower. All dimensions for reference only and subject to change. For prompt service, Parker Autoclave stocks select products. Consult your local representative. To change material from standard 316SS, add material suffix (see Technical brochure for pressure reduction) after part number above. Please note: Only "wetted" material is changed, not collars and gland nuts. If needed, use additional suffix **-AP** (All Parts).

Tel: +45 63 12 83 00 | Email: ps@hymatik.com | www.hymatik.com | Hvidkaervej 27a, DK-5250 Odense SV, Denmark

Line Filters

Medium Pressure - Pressures to 20,000 psi (1379 bar)

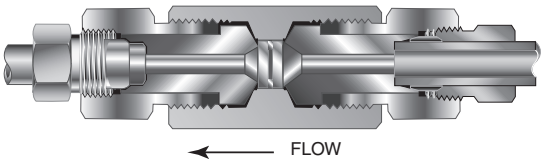

CLFX Series Dual Disc Line Filters

NOTE: Ordering Part Number can be found on Page 14

Dual-Disc Line Filters are utilized in numerous industrial, chemical processing, aerospace, nuclear and other applications. With the dual-disc design, large contaminant particles are trapped by the upstream filter element before they can reach and clog the smaller micron-size downstream element. Filter elements can be easily replaced.

Materials: Body, Cover, Gland Nut: CW 316 Stainless Steel.

Filter Element: 316L Stainless Steel, Sintered Disc Type. Downstream//upstream micron size 35/65 is standard. 5/10 or 10/35 also available when specified. Other element combinations available on special order.

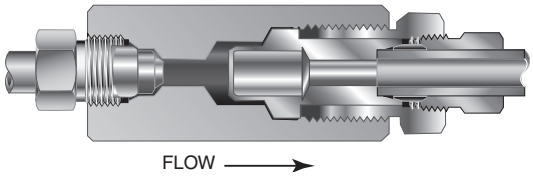

CXF Series Cup Type Line Filters

NOTE: Ordering Part Number can be found on Page 14

High Flow Cup-Type Line Filters are recommended in medium pressure systems requiring both high flow rates and maximum filter surface area. Widely used in the industrial and chemical processing fields, the cup design offers as much as six times the effective filter area as compared to disc-type units. In addition, the filter elements can be quickly and easily replaced.

Materials: Body, Cover, Gland Nut: CW 316 Stainless Steel.

Filter Element: 316L Stainless Steel, Sintered Cup Type. Standard elements available in choice of 5, 35 or 65 micron sizes. **Note:** Filter ratings are nominal.

Temperature Range: Both Models:
Oxidizing Fluids: 750°F (400°C) maximum
Non-Oxidizing Fluids: 900°F (480°C) -423°F (-252°C) minimum
(See “Technical Brochure” for Pressure/Temperature effect on temperatures above ambient.)

Spare Parts: Filter Elements are only replaceable part with either filter type. See chart on page 14 for Filter Element part numbers.

NOTE 1: All filters furnished complete with connection components unless otherwise specified. All dimensions for reference only and subject to change. Limited special material options are available, consult factory for assistance.

NOTE 2: Parker Autoclave Engineers disc and cup type filters are designed to filter small amounts of process particles. It is recommended that all fluids are thoroughly cleaned prior to entering the higher pressure system.

NOTE 3: Special material filters may be supplied with four flats in place of standard hex.

NOTE 4: Pressure differential not to exceed 1,000 psi (69 bar) in a flowing condition. This is indication to replace filter.

NOTE 5: Larger micron size filter element is installed on the upstream (inlet) side.

Tel: +45 63 12 83 00 | Email: ps@hymatik.com | www.hymatik.com | Hvidkaervej 27a, DK-5250 Odense SV, Denmark

Dual Disc Line Filters - Medium Pressure, 20,000 psi

Catalog Number	Connection Size & Type	Orifice inches (mm)	Micron Size** "um"	Replacement Filter P/N	Cover Gland Torque	Effective FilterArea in^2 (mm^2)	Dimensions - inches (mm)				
							A	B	C	D Typical	Hex
CLFX9900	SF562CX (9/16" MP)	.250 (6.35)	35/65	65um = P-0764 35um = P-0794	140 (190)	.25 (161.29)	4.94 (126.48)	2.68 (68.07)	0.53 (13.46)	0.94 (24)	1.38 (35)
CLFX9900-5/10			5/10	10um = P-1784 5um = P-1783							
CLFX9900-10/35			10/35	35um = P-0794 10um =P-1784							

Cup Type Line Filters - Medium Pressure, 20,000 psi

CXF4-5	SF250CX (1/4" MP)	.125 (3.18)	5	201A-2916	40 (55)	.81 (522.57)	2.94 (74.68)	2.50 (63.60)	0.38 (9.63)	0.50 (13)	0.81 (21)
CXF4-35			35	203A-2916							
CXF4-65			65	204A-2916							
CXF6-5	SF375CX (3/8" MP)	.218 (6.64)	5	201A-2916	65 (90)	.81 (522.57)	3.12 (79.26)	2.60 (66.55)	0.47 (11.99)	0.62 (16)	1.00 (25)
CXF6-35			35	203A-2916							
CXF6-65			65	204A-2916							
CXF9-5	SF562CX (9/16" MP))	.359 (9.12)	5	205A-2916	140 (190)	1.53 (987.09)	4.18 (106.17)	3.50 (88.90)	0.53 (13.46)	0.94 (24)	1.38 (35)
CXF9-35			35	207A-2916							
CXF9-65			65	208A-2916							
CXF12-5	SF750CX (3/4" MP)	.516 (13.10)	5	248A-2916	600 (810)	2.65 (1709.67)	5.50 (139.70)	4.75 (120.66)	0.62 (15.75)	1.18 (38)	2.12 (53)
CXF12-65			65	250A-2916							
CXF16-5	SF1000CX (1" MP)	.688 (17.48)	5	248A-2916	600 (810)	5.00 (3225.80)	6.62 (168.15)	5.75 (146.05)	0.72 (18.29)	1.38 (35)	2.12 (53)
CXF16-65			65	250A-2916							

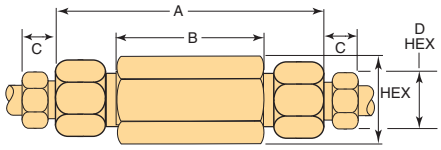

Dual Disc Line Filter Dimensions

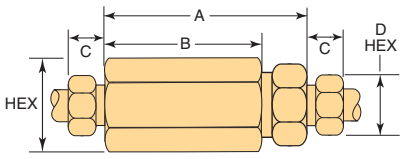

Cup Type Line Filter Dimensions

* Maximum pressure rating is based on the lowest rating of any component including tubing used.

** Other micron sizes available on special order. Consult Factory.

For optional materials, see Technical Brochure

All dimensions for reference only and subject to change.

For prompt service, Parker Autoclave Engineers stocks select products.

Consult your local representative.

To change material from standard 316SS, add material suffix (see Technical brochure for pressure reduction) after part number above. Please note: Only “wetted” material is changed, not collars and gland nuts. If needed, use additional suffix **-AP** (All Parts).

For Connection Torque requirements please see “Tools and Installation” brochure.

Tel: +45 63 12 83 00 | Email: ps@hymatik.com | www.hymatik.com | Hvidkaervej 27a, DK-5250 Odense SV, Denmark

Anti-Vibration Collet Gland Assembly

Medium Pressure - Pressures to 20,000 psi (1379 bar)



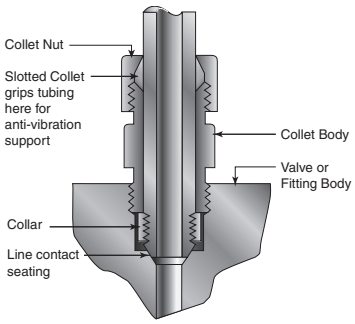

Series KCBGLX

Series KCBGLX (sizes to 1-1/2" (38.10 mm)

For extreme conditions of vibration and/or shock in tubing systems, such as an unsupported line near a compressor, coned-and-threaded connections are offered with the Parker Autoclave anti-vibration collet gland assembly. Originally patented in 1968 the collet gland assembly is designed to be completely interchangeable with standard Parker Autoclave Engineers Medium Pressure gland connections, the collet gland assembly provides equally effective pressure handling capability.

In standard connection systems, the bending stresses on the threaded area of the tubing imposed by excessive vibration or movement may cause premature fatigue failure of the tubing at the back of the thread. By moving the stress concentration back to the unthreaded part of the tubing and providing a wedge-type gripping action, the Parker Autoclave Engineers anti-vibration collet gland assembly strengthens the entire structure while preventing rotation. With stress concentration reduced and overall stress level maintained well below the endurance limit of the material, the result is virtually unlimited vibrational fatigue life.

A less complex and more economical design than other vibration-resistant connections, the collet gland assembly utilizes the same coned-and-threaded features of Parker Autoclave Engineers medium pressure connections. Series KCBGLX extends the gland nut to provide room for the tapered slotted collet. The design provides a slight difference in angles between the collet and the corresponding taper of the gland nut. As the nut is tightened, it acts to wedge the tapered end of the collet into a gripping engagement with the tubing.

Material:

316 SS with bonded dry film molybdenum disulfide to help prevent galling. Additional thread lubricant not needed.

Note:

1) To order valve and fitting components with anti-vibration assemblies add -**K** to catalog numbers.

2) Special material assemblies are normally supplied with four flats in place of standard hex.

3) See Tools and Installation Catalog for Installation Instructions including Torque Specifcations.

Tel: +45 63 12 83 00 | Email: ps@hymatik.com | www.hymatik.com | Hvidkaervej 27a, DK-5250 Odense SV, Denmark

Anti-Vibration Collet Gland Assembly

Medium Pressure - Pressures to 20,000 psi (1379 bar)

Anti-Vibration Collet Gland Assembly Details:

Complete Assembly Catalog Number	Part	Nominal Tubing Size Inches (mm)	Dimensions: Inches (mm)			
			A	B	Collet Nut Hex	Body Hex
KCBGLX40-316MC	Complete Assembly	1/4"	0.94 (23.88)	1.19 (30.23)	5/8"	1/2"
KCBGLX60-316MC	Complete Assembly	3/8"	1.19 (30.23)	1.50 (38.10)	13/16"	5/8"
KCBGLX90-316MC	Complete Assembly	9/16"	1.41 (35.81)	1.78 (45.21)	15/16"	15/16"
KCBGLX120-316MC	Complete Assembly	3/4"	1.59 (40.37)	2.00 (50.80)	1-3/8"	1-3/16"
KCBGLX160-316MC	Complete Assembly	1"	1.69 (42.93)	2.38 (60.45)	1-1/2"	1-3/8"
KCBGLX240-316MC	Complete Assembly	1-1/2"	2.75 (69.85)	3.63 (92.20)	2-1/4"	1-7/8"

All dimensions for reference only and subject to change.
For prompt service, Parker Autoclave Engineers stocks select products. Consult your local representative.

Antivibration Gland assemblies made with any optional material will be coated with dry film molybdenum disulfide to help prevent galling. See Tools and Installation brochure for reduced torque ratings.

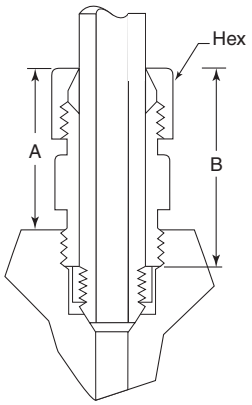

Series KCBGLX
20,000 psi (1379 bar)
(when used in PAE fittings or valves)

Standard Parker Autocalve Engineers collar not included in Antivibration Gland Assembly if ordered separately.

Always use back-up wrench on collet body when tightening collet nut to prevent over-torquing connection.

Tel: +45 63 12 83 00 | Email: ps@hymatik.com | www.hymatik.com | Hvidkaervej 27a, DK-5250 Odense SV, Denmark

Assembly Instructions

Medium Pressure Fittings - Pressures to 20,000 psi (1379 bar)

Medium Pressure Connection: Step by Step Assembly Instructions

Step 1	Step 2	Step 3
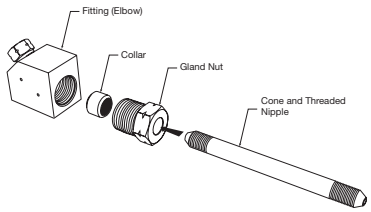	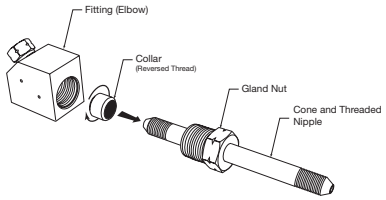	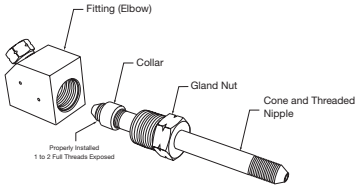
Insert Coned and Threaded Nipple through Gland (Typical Elbow Fitting Assembly consisting of Fitting Body, Collar, Gland, and Coned and Threaded Nipple or Tube End.)	Thread Collar turning (Reverse Threaded to prevent rotation during torque process) onto Coned and Threaded Nipple end.	For proper Collar placement, thread Collar onto Nipple leaving 1-1/2 to 2 full threads exposed on Fitting side of Collar. Lubricate Gland Threads and Collar Contact surface with anti-seize compound and tube tip with process compatible lubricant (do not use metal-flake type on tube or adapter tip)

Step 4	Step 5	Medium Pressure Gland Torque
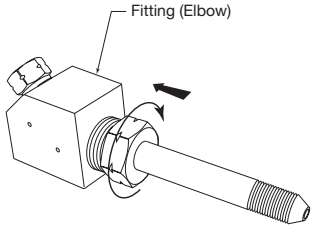	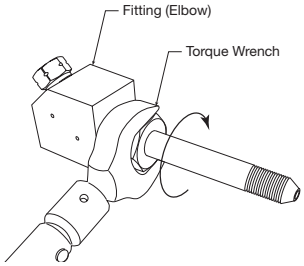	For 316/316L SS, 2507 Super Duplex Tubing & Adapters
Insert Tube/Gland assembly into Fitting body, turning clockwise approximately 4-5 threads (if unable to turn full distance by hand, look for misalignment issues with tubing and correct for proper seal).	Use Torque Wrench to properly set (see chart in next frame) Cone & Thread Connections. (Available with wrench adapters in Tools and Installation brochure)	

Fitting Size	Required Torque ft-lb (N.m)
1/4" MP	20 (27)
3/8" MP	30 (41)
9/16" MP-15Ksi	55 (75)
9/16" MP-20Ksi	55 (75)
3/4" MP-15Ksi	75 (102)
3/4" MP-20Ksi	90 (122)
1" MP-15Ksi	135 (187)
1" MP-20Ksi	135 (187)
1-1/2" MP	200 (272)

Torque for optional materials and pressures lower than maximum (above)

Tel: +45 63 12 83 00 | Email: ps@hymatik.com | www.hymatik.com | Hvidkaervej 27a, DK-5250 Odense SV, Denmark

Fittings and Tubing

High Pressure Cone & Thread

Pressures to 60,000 psi (4140 bar)
Includes Check Valves, Filters & Couplings



Principle of Operation:

Parker Autoclave Engineers High Pressure connection is a refinement of the original cone & thread joint which has been the standard connection in high pressure technology since its development by an agency of the US Government over 90 years ago. This design set precedence of quality and reliability found in all Parker Autoclave Engineers products to this day.

The pressure handling capabilities of this connection design have been applied successfully to control pressures in excess of 150,000 psi. All-metal sealing and working temperatures from -423° to 1200°F (-252° to 650°C), along with many different material options make this connection one of the most versatile ever. Fittings and tubing found in this section are designed using ASME B31.3 Chapter IX standards to be compatible with all of our High Pressure Valve and Fitting configurations.

High Pressure Fittings and Tubing Features:

- Utilize "F" Style High Pressure Coned-and-Threaded connections (see Tools & Installation for port dimensions)
- Available sizes are 1/4, 3/8, 9/16, and 1 inch nominal outside diameter tubing
- Standard Fitting Material is UNS S31600 with Tubing manufactured using UNS S31600/S31603, 316/316L stainless steel material, cold worked to Parker Autoclave proprietary standards. UNS S30400/S30403, 304 SS tubing is available
- Operating Temperatures from -423°F to 1200°F (-252° to 650°C)
- Anti-vibration connection components available, see pages 15 & 16
- High pressure, High cycle Autofrettaged tubing available along with many material options.
- Fitting and Tubing options for 100,000 and 150,000 psi applications available, see Ultra High Fitting brochure

All Parker Autoclave Engineers fittings are marked with manufacturers name, part number, material, heat code and maximum pressure for complete traceability.

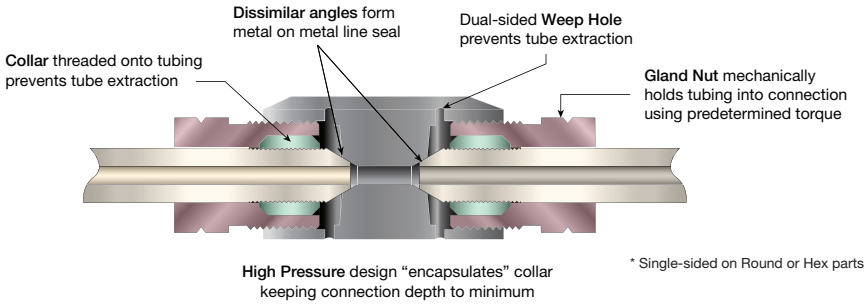

ENGINEERING YOUR SUCCESS.

Fittings

High Pressure Fittings - Pressures to 60,000 psi (4140 bar)



Parker Autoclave Engineers High Pressure Cone & Thread Fittings, Couplings, Filters and Valves utilize the F Style Cone & Thread Connection Detail (see Tools & Installation brochure for dimensions). These fittings are compatible with Series 30SC, 43SC, 30VM, 40VM, and 60VM valves and Parker Autoclave Engineers high pressure tubing.

For instructions on how to make this High Pressure Cone & Thread connection see the step by step instructions on page 7.

High Pressure Connection Components:

All valves and fittings are supplied complete with appropriate gland and tubing collar. To order these components separately, use part numbers listed below. When using plug, collar is not required. Tubing Pressure Caps can be found in Adapter brochure.

Connection Type	Gland	Collar	Plug	Connection Components (Industry Standard)
			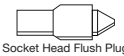 Socket Head Flush Plug version, add "**-F**" suffix	
F250C (1/4 HP) F375C (3/8 HP) F562C (9/16 HP) F562C40 (9/16 HP)	AGL40 AGL60 AGL90 AGL90	ACL40 ACL60 ACL90 ACL90	AP40 AP60 AP90 AP90	For use in all Parker Autoclave Engineers High Pressure Cone & Thread Fittings, Adapters and Valves up to 60,000 psi

			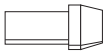	
F1000C43 (1" HP)	CGLX160	CCLX160	43CP160	1" Medium Pressure collar and gland design is suitable for use in all Parker Autoclave Engineers 1" High Pressure Cone & Thread Fittings, Adapters, and Valves up to 43,000 psi maximum

Notes:
To ensure proper fit use Parker Autoclave Engineers tubing.
For gland nut hex sizes and torque values, see "Tools and Installation" brochure.
All Cone and Thread ports MUST utilize weep holes for safety. When weep hole is not available, we offer a gland nut with a "Slotted Male Thread" that provides this safety feature without the need for the separate port. Use suffix "**-SMT**" with Gland part number when needed.

All PAE High Pressure Fittings and Tubing can be made with materials suitable for NACE/ISO 15156 requirements. As per NACE and ISO-15156, it is contingent on the end user to select this material. As this compatibility limits the use of "cold worked" materials, most of the choices come with significant pressure reductions. Please consult our Technical Brochure where we identify the more popular annealed materials along with the pressure reduction. Our Sour Oil and Gas brochure has a more complete description of the available options for pressures up to 30,000 psi.

Special Materials: Special Material Fittings are normally supplied with CW 316 SS Glands and Collars as these parts do not touch flowing (wetted) media. To match the same material as selected for body, use either "**-SOG**" (Sour Oil or Gas - NACE) or "**-AP**" (All Parts) suffix. Special material glands and adapter bodies are normally supplied with four flats (square) in place of standard hex. Include option suffix "**-H**" if hex is required.

If vibration is inherent in the application, please see information on Antivibration Gland Fittings on pages 15 and 16 of this brochure.

Tel: +45 63 12 83 00 | Email: ps@hymatik.com | www.hymatik.com | Hvidkaervej 27a, DK-5250 Odense SV, Denmark

NACE/ISO 15156 Compatibility

All PAE High Pressure Fittings and Tubing can be made with materials suitable for NACE/ISO 15156 requirements. As per NACE and ISO-15156, it is contingent on the end user to select suitable material for service. As this compatibility limits the use of "cold worked" materials, most material choices come with significant pressure reductions. Please consult our Technical Brochure where we identify the more popular annealed materials along with the pressure reduction.

NACE Suffix and Special Materials Options:

"**-SOG**" (Sour Oil & Gas) suffix converts all pressure containing parts from cold worked 3166 SS to annealed condition material, requires hardness check, and NACE certificate is generated for each part. Pressure reductions of 50% (30,000 psi) are possible.

"**-AP**" (All Parts) suffix converts all fitting and most valve materials to the selected material. Normally, collar and gland remain as cold worked 316 SS as they are not "wetted" parts. This option does not get the Hardness verification and no NACE certificate is generated.

Contact factory for other pressure/material options.

90° Elbow: 45° Elbows are available - replace 00 with 45 (ie; CL6645 or 43CL1645)

Catalog Number	Connection Type	Outside Diameter Tube	Pressure Rating psi (bar)*	Minimum Opening	Dimensions - inches (mm)						Block Thickness
					A	B	C	D Typical	E	F	
CL4400	F250C	1/4 (6.35)	60,000 (4140)	.094 (2.39)	1.00 (25.40)	1.50 (38.10)	0.50 (12.70)	0.63 (16.00)	0.62 (15.75)	0.88 (22.35)	0.75 (19.05)
CL6600	F375C	3/8 (9.53)	60,000 (4140)	.125 (3.18)	1.50 (38.10)	2.00 (50.80)	0.52 (13.21)	0.81 (20.62)	1.00 (25.40)	1.25 (31.75)	1.00 (25.40)
CL9900	F562C	9/16 (7.94)	60,000 (4140)	.188 (4.78)	1.88 (47.75)	2.62 (66.55)	0.81 (20.57)	1.19 (30.23)	1.12 (28.45)	1.88 (47.75)	1.50 (38.10)
40CL9900	F562C40	9/16 (7.94)	40,000 (2760)	.250 (6.35)	1.88 (47.75)	2.62 (66.55)	0.81 (20.57)	1.19 (30.23)	1.12 (28.45)	1.88 (47.75)	1.50 (38.10)
43CL16	F1000C43	1 (25.40)	43,000 (2965)	.438 (11.13)	3.00 (76.20)	4.12 (104.65)	0.72 (18.29)	1.38 (35.05)	2.06 (52.32)	2.06 (52.32)	1.75 (44.45)

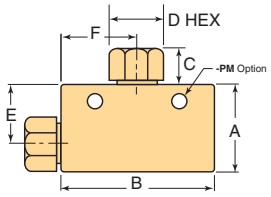

Note: Fittings such as 45° elbows, reducer elbows, and reducer 45° elbows are available upon request. For mounting hole option add suffix - **PM** to catalog number, consult factory for mounting hole dimensions.

*Maximum pressure rating is based on the lowest rating of any component. Actual working pressure may be determined by tubing pressure rating, if lower. All dimensions for reference only and subject to change. For prompt service, Parker Autoclave Engineers stocks select products. Consult your local representative.

Tee

Catalog Number	Connection Type	Outside Diameter Tube	Pressure Rating psi (bar)*	Minimum Opening	Dimensions - inches (mm)						Block Thickness
					A	B	C	D Typical	E	F	
CT4440	F250C	1/4 (6.35)	60,000 (4140)	.094 (2.39)	1.25 (31.75)	2.00 (50.80)	0.50 (12.70)	0.63 (16.00)	0.88 (22.35)	1.00 (25.40)	1.00 (25.40)
CT6660	F375C	3/8 (9.53)	60,000 (4140)	.125 (3.18)	1.56 (39.62)	2.00 (50.80)	0.52 (13.21)	0.81 (20.62)	1.06 (26.92)	1.00 (25.40)	1.00 (25.40)
CT9990	F562C	9/16 (7.94)	60,000 (4140)	.188 (4.78)	2.12 (53.85)	2.62 (66.55)	0.81 (20.57)	1.19 (30.23)	1.38 (35.05)	1.31 (33.27))	1.50 (38.10)
40CT9990	F562C40	9/16 (7.94)	40,000 (2760)	.250 (6.35)	2.12 (53.85)	2.62 (66.55)	0.81 (20.57)	1.19 (30.23)	1.38 (35.05)	1.31 (33.27)	1.50 (38.10)
43CT16	F1000C43	1 (25.40)	43,000 (2965)	.438 (11.13)	3.00 (76.20)	4.12 (104.65)	0.72 (18.29)	1.38 (35.05)	2.06 (52.32)	2.06 (52.32)	1.75 (44.45)

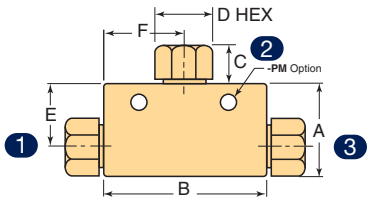

*Maximum pressure rating is based on the lowest rating of any component. Actual working pressure may be determined by tubing pressure rating, if lower. All dimensions for reference only and subject to change. For mounting hole option add suffix **-PM** to catalog number. Consult factory for mounting hole dimensions. To order Tee with different size connections of same type, change part number size codes using order shown in drawing, ie: CT6960 would build Tee with 9/16" HP branch and 3/8" HP runs. For Connection Torque requirements please see "Tools and Installation" brochure.

Cross

Catalog Number	Connection Type	Outside Diameter Tube	Pressure Rating psi (bar)*	Minimum Opening	Dimensions - inches (mm)						Block Thickness
					A	B	C	D Typical	E	F	
CX4444	F250C	1/4 (6.35)	60,000 (4140)	.094 (2.39)	1.25 (31.75)	2.00 (50.80)	0.50 (12.70)	0.63 (16)	0.62 (15.75)	1.00 (25.40)	1.00 (25.40)
CX6666	F375C	3/8 (9.53)	60,000 (4140)	.125 (3.18)	2.12 (53.85)	2.00 (50.80)	0.52 (13.21)	0.81 (21)	1.06 (26.92)	1.00 (25.40)	1.00 (25.40)
CX9999	F562C	9/16 (7.94)	60,000 (4140)	.188 (4.78)	2.75 (69.85)	2.62 (66.55)	0.81 (20.57)	1.19 (31)	1.38 (35.05)	1.31 (33.27)	1.50 (38.10)
40CX9999	F562C40	9/16 (7.94)	40,000 (2760)	.250 (6.35)	2.75 (69.85)	2.62 (66.55)	0.81 (20.57)	1.19 (31)	1.38 (35.05)	1.31 (33.27)	1.50 (38.10)
43CX16	F1000C43	1 (25.40)	43,000 (2965)	.438 (11.13)	4.12 (104.65)	4.12 (104.65)	0.72 (18.29)	1.38 (35)	2.06 (52.32)	2.06 (52.32)	1.75 (44.45)

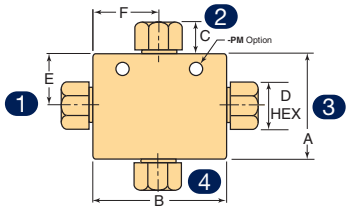

*Maximum pressure rating is based on the lowest rating of any component. Actual working pressure may be determined by tubing pressure rating, if lower. For prompt service, Parker Autoclave Engineers stocks select products. Consult your local representative. For mounting hole option add suffix -PM to catalog number. Consult factory for mounting hole dimensions. To order Cross with different size connections of same type, change part number size codes using order shown in drawing, ie: CX6969 would build a Cross with 9/16" HP alternating with 3/8" HP. For Connection Torque requirements please see "Tools and Installation" brochure.

Bulkhead Coupling

Catalog Number	Connection Type	Outside Diameter Tube	Pressure Rating psi (bar)*	Minimum Opening	Dimensions - inches (mm)						
					A	B	C	D Typical	E	F Hex	G Thickness
60BF4433	F250C	1/4 (6.35)	60,000 (4140)	.094 (2.39)	0.94 (2.39)	1.88 (47.75)	0.50 (12.70)	0.63 (16)	0.50 (12.70)	1.00 (25.40)	0.38 (9.65)
60BF6633	F375C	3/8 (9.53)	60,000 (4140)	.125 (3.18)	1.12 (28.45)	2.38 (60.45)	0.53 (13.46)	0.81 (21)	0.78 (19.81)	1.38 (35.05)	0.38 (9.65)
60BF9933	F562C	9/16 (7.94)	60,000 (4140)	.188 (4.78)	1.69 (42.93)	2.75 (69.85)	0.81 (20.57)	1.19 (31)	1.00 (25.40)	1.88 (47.75)	0.38 (9.65)
40BF9933	F562C40	9/16 (7.94)	40,000 (2760)	.250 (6.35)	1.69 (42.93)	2.75 (69.85)	0.81 (20.57)	1.19 (31)	1.00 (25.40)	1.88 (47.75)	0.38 (9.65)
43BF16	F1000C43	1 (25.40)	43,000 (2965)	.438 (11.13)	1.94 (49.28)	3.50 (88.90	0.72 (18.29)	1.38 (35)	1.50 (38.10)	2.13 (54.10)	0.50 (12.70)

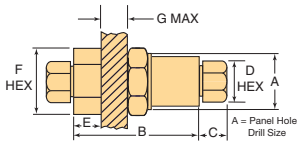

*Maximum pressure rating is based on the lowest rating of any component. Actual working pressure may be determined by tubing pressure rating, if lower. All dimensions for reference only and subject to change. For prompt service, Parker Autoclave Engineers stocks select products. Consult your local representative.

Tel: +45 63 12 83 00 | Email: ps@hymatik.com | www.hymatik.com | Hvidkaervej 27a, DK-5250 Odense SV, Denmark

Straight Coupling / Union Coupling (see assembly drawing below)

Catalog Number	Connection Type	Outside Diameter Tube	Pressure Rating psi (bar)*	Minimum Opening	Dimensions - inches (mm) A	B	C	D Typical	Coupling Type
60F4433 60UF4433	F250C	1/4 (6.35)	60,000 (4140)	.094 (2.39)	0.75 (19.05)	1.38 (35.05)	0.50 (12.70)	0.63 (16)	Straight Union
60F6633 60UF6633	F375C	3/8 (9.53)	60,000 (4140)	.125 (3.18)	1.00 (25.40)	1.75 (44.45)	0.53 (13.46)	0.81 (21)	Straight Union
60F9933 60UF9933	F562C	9/16 (7.94)	60,000 (4140)	.188 (4.78)	1.38 (35.05)	2.19 (55.63)	0.81 (20.57)	1.19 (31)	Straight Union
40F9933 40UF9933	F562C40	9/16 (7.94)	40,000 (2760)	.250 (6.35)	1.38 (35.05)	2.19 (55.63)	0.81 (20.57)	1.19 (31)	Straight Union
43F16 43UF16	F1000C43	1 (25.40)	43,000 (2965)	.438 (11.13)	1.75 (44.45)	3.50 (88.90)	0.72 (18.29)	1.38 (35)	Straight Union

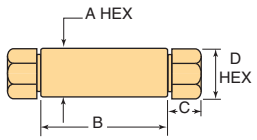

Note: Union Couplings are designed with a removable seat insert allowing disassembly and tubing removal without the necessity of loosening other items in a line.

*Maximum pressure rating is based on the lowest rating of any component. Actual working pressure may be determined by tubing pressure rating, if lower. All dimensions for reference only and subject to change. For prompt service, Parker Autoclave Engineers stocks select products. Consult your local representative.

Union Coupling Assembly

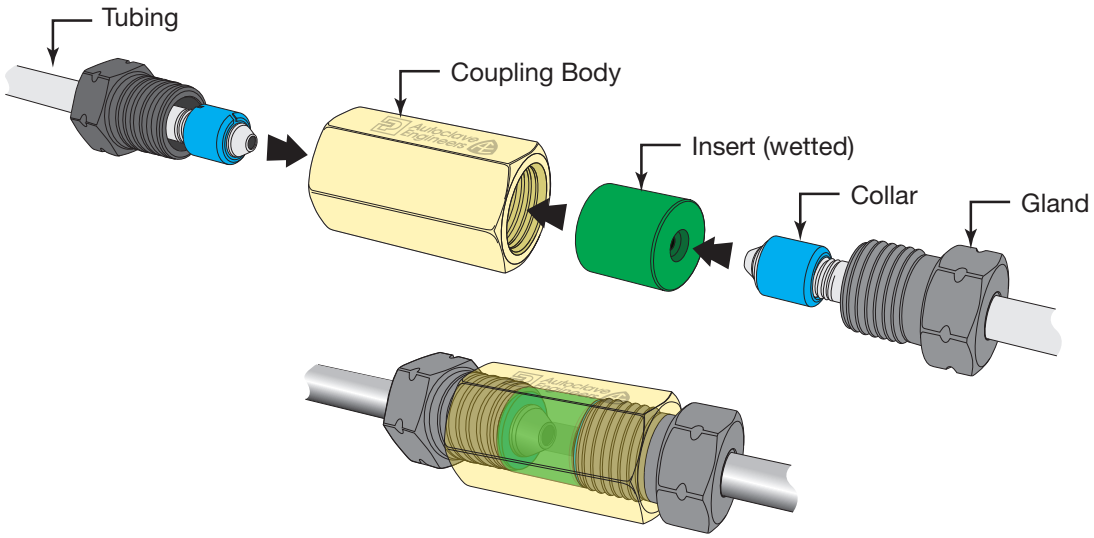

Assembled Union Coupling

Union vs. Straight Coupling Comparison

In much the same as with a traditional Pipe Union, the PAE Union Coupling is used to easily disassemble tubing runs when valves or fittings need to be replaced after original installation. The Body and Insert are two different pieces in the same assembly. The body can slide down tubing leaving only the insert and the tubing tips engaged. Then with only minimal tube shift, the insert drops out allowing the tubing to be removed avoiding the need to disassemble multiple tubing sections from closest elbow.

Note: When Special Materials are requested, the only material that is changed is the Insert (wetted). If “All Parts” are to be requested, include suffix “**-AP**” or “**-SOG**” if for NACE/ISO 15156.

Tel: +45 63 12 83 00 | Email: ps@hymatik.com | www.hymatik.com | Hvidkaervej 27a, DK-5250 Odense SV, Denmark

Tubing

High Pressure Tubing - Pressures to 60,000 psi (4140 bar)



Parker Autoclave Engineers offers a complete selection of austenitic cold drawn stainless steel tubing designed to match the performance standards of Parker Autoclave valves and fittings. Parker Autoclave high pressure tubing is manufactured of 316/316L (UNS S31600/S31603) and 304/304L (UNS S30400/S30403) specifically for high pressure applications requiring both strength and corrosion resistance. The tubing is furnished in random lengths between 20 feet (6 meters) and 26.5 feet (8.0 meters). The average is 24 feet (7.3 meters). High pressure tubing is available in five sizes and a variety of materials. Special longer lengths are available. Consult factory.

Inspection and Testing:

Parker Autoclave Engineer's high pressure tubing is inspected to assure freedom from seams, laps, fissures or other flaws, as well as carburization or intergranular carbide precipitation. The outside and inside diameters of the tubing are controlled within close tolerances including runout. Sample pieces of tubing for each lot are tested to confirm mechanical properties. Hydrostatic testing is also performed on a statistical basis and is conducted at the working pressure of the tube. Parker Autoclave will perform 100% hydrostatic testing up to 1.5 times working pressure at additional cost if desired.

Special Material:

In addition to the most commonly requested materials we have other material options outlined in our Technical Brochure such as 316 SS (annealed), 6 Moly, and Inconel. These options include materials suitable for use in NACE/ISO 15156 corrosive or stress cracking applications.

Tubing Tolerance:

Nominal Tubing Size inches (mm)	Tolerance/Outside Diameter inches (mm)
1/4 (6.35)	.248/.243 (6.30/6.17)
3/8 (9.53)	.370/.365 (9.40/9.27)
9/16 (14.29)	.557/.552 (14.15/14.02)
1 (25.40)	.995/.990 (25.27/25.14)

Note:
Standard Tubing is manufactured in accordance with ASME B31.3 Chapter IX standards using UNS S31600/S31603, 316/316L Stainless Steel material, cold worked to Parker Autoclave proprietary standards.

High Pressure Tubing outside diameter dimensions do not meet standard commercial tubing tolerances. Tubing outside dimensions are specifically chosen to meet tube threading die requirements.

Parker Autoclave Engineers components and tubing are designed as a "complete system" for safety and our fittings will not be compatible with standard "commercial" tubing.

Autofrettage for High Pressure High Cycle (HPHC) applications:

If high cycle fatigue life is a concern, Parker Autoclave Engineers can supply tubing which has been autofrettaged for improved fatigue resistance. For internally pressurized tubing, **autofrettage** is a method by which the inner wall of the tube is precompressed to reduce the tube operating bore stresses, thereby increasing cycle life and increasing the life span of the tubing. (every application is different and while life span increases of 40% have been reported, we cannot guarantee any specific increase in tubing life.)

Tel: +45 63 12 83 00 | Email: ps@hymatik.com | www.hymatik.com | Hvidkaervej 27a, DK-5250 Odense SV, Denmark

High Pressure Tubing Details: 316/316L & 304/304L Stainless Steel (Cold Worked)

Catalog Number	Tube Material	Fits Connection Type	Tube Size inches (mm)			Flow Area in^2 (mm^2)	Working Pressure psi (bar)*			
			Outside Diameter	Inside Diameter	Wall Thickness		-423 to 100°F (-252 to 38°C)	200°F (93°C)	400°F (204°C)	600°F (316°C)
MS15-081	316SS	F250C	1/4 (6.35)	0.083 (2.11)	0.083 (2.11)	0.005 (3.23)	60,000 (4140)	60,000 (4140)	57,750 (3982)	54,250 (3740)
MS15-182	304SS						60,000 (4140))	56,800 (3916)	17,200 (1172)	50,700 (3496)
MS15-087	316SS	F375C	3/8 (9.63)	0.125 (3.18)	0.125 (3.18)	0.012 (7.74)	60,000 (4140)	60,000 (4140)	57,750 (3982)	54,250 (3740)
MS15-183	304SS						60,000 (4140)	56,800 (3916)	51,650 (3561)	50,700 (3496)
MS15-083	316SS	F562C	9/16 (14.29)	0.188 (4.78)	0.187 (4.75)	0.028 (18.06)	60,000 (4140)	60,000 (4140)	57,750 (3982)	54,250 (3740)
MS15-185	304SS						60,000 (4140)	56,800 (3916)	51,650 (3561)	50,700 (3496)
MS15-090	316SS	F562C40	9/16 (14.29)	0.250 (6.35)	.156 (3.96)	.048 (30.97)	40,000 (2760)	40,000 (2760)	38,500 (2654)	36,100 (2489)
MS15-211	316SS	F1000C43	1 (25.40)	0.438 (11.13)	.281 (7.14)	0.151 (97.42)	43,000 (2965)	43,000 (2965)	43,000 (2965)	41,380 (2853)

Note:
1. Autofrettaged tubing available (see Technical section: Pressure Cycling for explanation of "Autofrettage".
2. For Ultra-High Pressure, High Cycle (HPHC) tubing above 60,000 psi, see Parker Autoclave Engineers Ultra High Pressure Fittings and Tubing Brochure.
3. See Technical Section for Temperature Ratings over 600°F (315°C).

*Maximum pressure rating is based on the lowest rating of any component. Actual working pressure may be determined by tubing pressure rating, if lower.
All dimensions for reference only and subject to change. For prompt service, Parker Autoclave Engineers stocks select products. Consult your local representative.

High Pressure Connection: Step by Step Assembly Instructions

Step 1

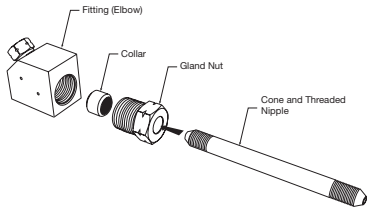

Insert Coned and Threaded Nipple through Gland

(Typical Tee Fitting Assembly consisting of Fitting Body, Collar, Gland, and Coned and Threaded Nipple or Tube End.)

Step 2

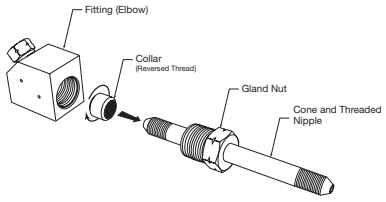

Thread Collar turning (Reverse Threaded to prevent rotation during torque process) onto Coned and Threaded Nipple end.

Step 3

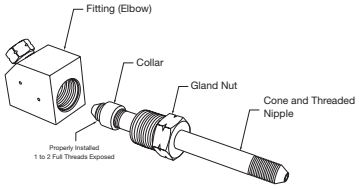

For proper Collar placement, thread Collar onto Nipple leaving 1 to 2 full threads exposed on Fitting side of Collar. Lubricate Gland Threads with anti-seize compound and tube tip with process compatible lubricant (do not use metal-flake type)

Step 4

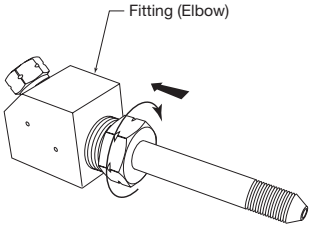

Insert Tube/Gland assembly into Fitting body, turning clockwise approximately 4-5 threads (if unable to turn full distance by hand, look for misalignment issues with tubing and correct for proper seal).

Step 5

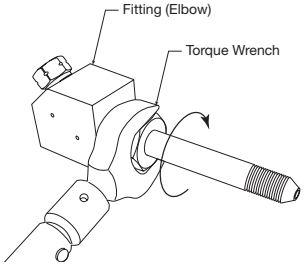

Use Torque Wrench to properly set (see chart in next frame) Cone & Thread Connections. (Available with wrench adapters in Tools and Installation brochure)

High Pressure Gland Torque

For 316/316L SS, 2507 Super Duplex Tubing & Adapters

Fitting Size	Required Torque ft-lb (N.m)
1/4" HP	25 (34)
3/8" HP	50 (68)
9/16" HP	75 (102)
9/16" HP-40Ksi	60 (82)
1" HP-43Ksi	180 (244)

For torques and optional materials (lower pressures), see Tools and Installation Catalog 02-0149SE

*1" Connection will have collar in front of gland nut but assembles with same process.

Tel: +45 63 12 83 00 | Email: ps@hymatik.com | www.hymatik.com | Hvidkaervej 27a, DK-5250 Odense SV, Denmark

Coned-and-Threaded Nipples

High Pressure - Pressures to 60,000 psi (4140 bar)



For rapid system make-up, Parker Autoclave Engineers supplies pre-cut, coned-and-threaded nipples in various sizes and lengths for Parker Autoclave Engineers medium pressure valves and fittings.

Special Lengths:

In addition to the standard lengths listed in the table below, nipples are available in any custom length. Consult factory.

Material:**

Catalog numbers in table refer to Type UNS S31600/ S31603, CW 316/316L Stainless steel. Optional materials available. Consult factory.

Nipple Details:

Catalog Number *(316 Stainless Steel)*					
Tube Size inches (mm)	Fits Connection Type				
	F250C	F375C	F562C	F562C40	F1000C43
Outside Diameter	1/4 (6.35)	3/8 (9.53)	9/16 (14.29)	9/16 (14.29)	1 (25.40)
Inside Diameter	.083 (2.11)	.125 (3.18)	.188 (4.78	.250 (6.35)	.438 (12.409
Working Pressure at 100°F (38°C) psi (bar)*	60,000 (4140)	60,000 (4140)	60,000 (4140)	40,000 (2760)	43,000 (2965)
Nipple Length inches (mm)					
2.75" (69.85)	CN4402-316				
3.00" (76.20)	CN4403-316	CN6603-316			
4.00" (101.60)	CN4404-316	CN6604-316	CN9904-316	40CN9904-316	
6.00" (152.40)	CN4406-316	CN6606-316	CN9906-316	40CN9906-316	43CN1606-316
8.00" (203.20)	CN4408-316	CN6608-316	CN9908-316	40CN9908-316	43CN1608-316
10.00" (254.00)	CN44010-316	CN66010-316	CN99010-316	40CN99010-316	43CN16010-316
12.00" (304.80)	CN44012-316	CN66012-316	CN99012-316	40CN99012-316	43CN16012-316
14.00" (355.60)	CN44014-316	CN66014-316	CN99014-316	40CN99014-316	43CN16014-316
16.00" (406.40)	CN44016-316	CN66016-316	CN99016-316	40CN99016-316	43CN16016-316
18.00" (457.20)	CN44018-316	CN66018-316	CN99018-316	40CN99018-316	43CN16018-316
20.00" (508.00)	CN44020-316	CN66020-316	CN99020-316	40CN99020-316	43CN16020-316
22.00" (558.80)	CN44022-316	CN66022-316	CN99022-316	40CN99022-316	43CN16022-316
24.00" (609.60)	CN44024-316	CN66024-316	CN99024-316	40CN99024-316	43CN16024-316

Notes:
See High Pressure Tubing section of this brochure or Technical Brochure for pressure ratings at various temperatures.

* Maximum pressure rating is based on the lowest rating of any component. Actual working pressure may be determined by tubing pressure rating, if lower.

** Type 304 Stainless Steel nipples available.

*** 40CN99XX nipples use the larger bore (0.250") 9/16" tubing rated at 40,000 psi with standard HP collars and glands.

All dimensions for reference only and subject to change. For prompt service, Parker Autoclave Engineers stocks select products. Consult your local representative.

Tel: +45 63 12 83 00 | Email: ps@hymatik.com | www.hymatik.com | Hvidkaervej 27a, DK-5250 Odense SV, Denmark

Check Valves

High Pressure - Pressures to 60,000 psi (4140 bar)

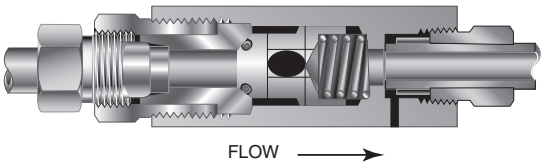

CKO Series O-Ring Check Valve

Ordering part numbers can be found on page 12

Provide unidirectional flow and tight shut-off for liquids and gases with high reliability. When differential drops below cracking pressure*, valve shuts off. (**Not for use as relief valve.**)

Cracking Pressure*:

20 psi (1.38 bar) ±30%. Springs for higher cracking pressures up to 100 psi available on special order for O-ring style check valves only.

Temperature Range/O-ring Options:

Viton (FKM) O-ring (std.): 0° to 400°F (-18° to 204°C)
Buna-N O-ring (**-BO** suffix): -20° to 250°F (-29° to 121°C)
FFKM O-ring (**-KO** suffix): 30° to 500°F *(-18° to 260°C)
PTFE O-ring (**-TO** suffix): -100° to 400°F (-73° to 204°C)
PTFE O-ring with Low Temp Spring (**-LTTO** suffix): to -423°F (-252°C)

Installation:

Vertical or Horizontal as required. Flow Direction arrow on valve body.

CAUTION: While testing has shown O-Rings to provide satisfactory service life, both cyclic and shelf life may vary widely with differing service conditions, properties of reactants, pressure and temperature cycling and age of the O-ring.

FREQUENT INSPECTIONS SHOULD BE MADE to detect any deterioration, and O-rings replaced as required.

NOTE: For optional material see Technical Brochure. Special material check valves are normally supplied with four flats in place of standard hex.

Material of Construction:

Item #	Description	Material
1	Check Valve Body	316 SS
2	Cover	316 SS
3	Poppet	316 SS
4	Gland Nut	316 SS
5	Spring	302 SS
6	O-Ring	90 Duro FKM

Typical spare parts found in Repair Kits

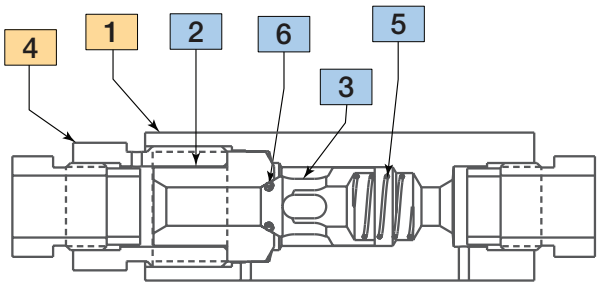

Basic O-ring Check Valve Repair Kits:

Check Valves are easily repaired. Add "**R**" to front of valve catalog number for proper repair kit (example: RCKO9900) See "Cover Torque" on page 12 for re-assembly. Include any catalog number suffix marked on original part when ordering repair kit.

Tel: +45 63 12 83 00 | Email: ps@hymatik.com | www.hymatik.com | Hvidkaervej 27a, DK-5250 Odense SV, Denmark

Check Valves

High Pressure - Pressures to 60,000 psi (4140 bar)

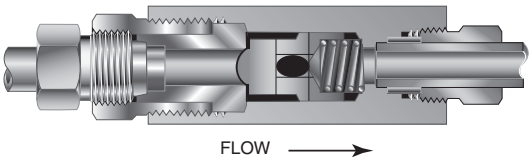

CB Series Ball Check Valve

Ordering part numbers can be found on page 12

Prevent reverse flow **where leak-tight shut-off is not mandatory**. When differential drops below cracking pressure, valve closes. With all-metal components, valve can be used up to 1200°F (649°C). See Technical Information section for connection temperature limitations. (**Not for use as relief valve.**)

Ball and poppet are an integral design to assure positive, in-line seating without "chatter". Poppet is designed essentially for axial flow with minimum pressure drop.

Cracking Pressure*: 20 psi (1.38 bar) +/- 30% No optional cracking pressures available.

Temperature Range: With All-Metal components, valve can be used to 800°F (425°C). Minimum standard operating temperature is -110°F (-79°C). For Low Temperature operation to -423°F (-252°C) use suffix "**-LT**" (Low Temp Spring)

Installation:
Vertical or Horizontal as required. Flow Direction arrow on valve body.

NOTE: For optional material see Technical Brochure. Special material check valves are normally supplied with four flats in place of standard hex.

Material of Construction:

Item #	Description	Material
1	Gland	316 SS
2	Gland Nut	316 SS
3	Cover	316 SS
4	Poppet	316 SS
5	Spring	302 SS
6	Check Valve Body	316 SS

Typical spare parts found in Repair Kits

Basic Ball Check Valve Repair Kits:

Check Valves are easily repaired. Add "**R**" to front of valve catalog number for proper repair kit (example: RCB9901) See "Cover Torque" on page 12 for re-assembly.

Include any catalog number suffix marked on original part when ordering repair kit.

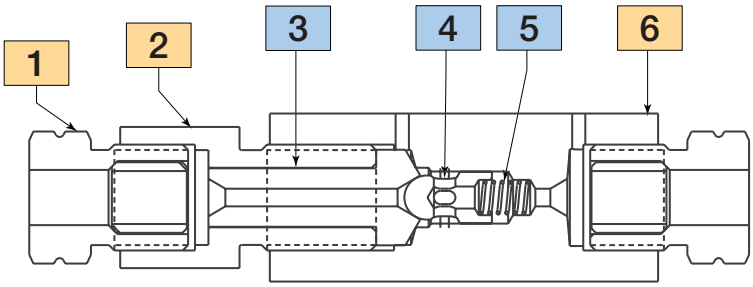

Tel: +45 63 12 83 00 | Email: ps@hymatik.com | www.hymatik.com | Hvidkaervej 27a, DK-5250 Odense SV, Denmark

Excess Flow Valves

High Pressure - Pressures to 60,000 psi (4140 bar)

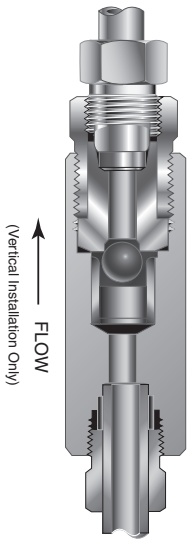

CK Series Ball Type
Excess Flow Valves (Surge Check)

Ordering part numbers can be found on page 12

Protects pressure gauges and pressure instrumentation from sudden surges in flow or venting in the event of line failure.

Vertical Installation: Since this type of check valve employs a non-spring loaded ball, valve MUST be installed in VERTICAL position with arrow on valve body pointing UP. (cover gland up).

Resetting Valve: Equalize the pressure across the ball. The ball will drop and reset automatically. Note: when in checked position, a small flow is permitted through the valve.

Temperature Range: With All-Metal components, Excess Flow Valve can be used from -423° to 800°F (-252° to 425°C).

NOTE: For optional material see Technical Brochure. Special material check valves are normally supplied with four flats in place of standard hex.

Material of Construction:

Item #	Description	Material
1	Gland Nut	316 SS
2	Cover	316 SS
3	Ball, 1/2" Diameter	302 SS
4	Check Valve Body	316 SS

Typical spare parts found in Repair Kits

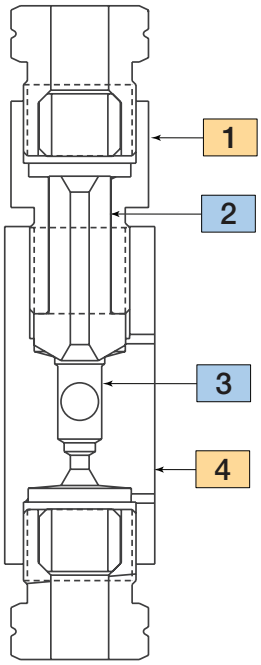

Excess Flow Valve Repair Kits

Excess Flow Valves are easily repaired. Add "**R**" to front of valve catalog number for proper repair kit (example: RCK9902) See "Cover Torque" on page 12 for re-assembly. Include any catalog number suffix marked on original part when ordering repair kit.

Tel: +45 63 12 83 00 | Email: ps@hymatik.com | www.hymatik.com | Hvidkaervej 27a, DK-5250 Odense SV, Denmark

O-Ring Check Valves

Catalog Number	Fits Connection Type	Pressure Rating psi (bar)**	Orifice inches (mm)	Rated Cv	Cover Gland Torque ft. lb (Nm)	Dimensions - inches (mm)				
						A	B	C	D Typical	Hex
CKO4400	F250C	60,000 (4140)	.094 (2.39)	.15	110 (150)	3.38 (85.85)	2.50 (63.50)	0.50 (12.70)	0.63 (16)	1.18 (30)
CKO6600	F375C	60,000 (4140)	.125 (3.184)	.28	110 (150)	3.75 (95.25)	2.62 (66.55)	0.53 (13.46)	0.75 (19)	1.18 (40)
CKO9900	F562C	60,000 (4140)	.187 (4.75)	.63	160 (220)	4.62 (117.35)	3.38 (85.85)	0.81 (20.57)	1.12 (28)	1.50 (38)
40CKO9900	F562C40	40,000 (2758)	.250 (6.35)	.78	185 (250)	4.64 (117.86)	3.38 (85.73)	0.72 (18.29)	1.19 (30)	1.50 (38)
43CKO16	F1000C43	43,000 (2965)	.438 (11.13)	4.3	530 (720)	6.54 (166.11)	5.63 (143.00)	0.72 (18.29)	1.38 (35)	1.88† (48)

Ball Check Valves

CB4401	F250C	60,000 (4140)	.094 (2.39)	.15	110 (150)	3.38 (85.85)	2.50 (63.50)	0.50 (12.70)	0.63 (16)	1.18 (30)
CB6601	F375C	60,000 (4140)	.125 (3.18)	.28	110 (150)	3.75 (95.25)	2.62 (66.55)	0.53 (13.46)	0.75 (19)	1.18 (30)
CB9901	F562C	60,000 (4140)	.187 (4.75)	.63	160 (220)	4.62 (117.35)	3.38 (85.85)	0.81 (20.57)	1.12 (28)	1.50 (38)
40CB9901	F562C40	40,000 (2558)	.250 (6.35)	.78	185 (250)	4.64 (117.86)	3.38 (85.85)	0.72 (18.29)	1.19 (30)	1.50 (38)
43CB16	F1000C43	43,000 (2965)	.438 (11.13)	4.3	530 (720)	6.54 (166.11)	5.63 (143.00)	0.72 (18.29)	1.38 (35)	1.88† (48)

Ball Type Excess Flow Valves (Surge Check)

CK4402	F250C	60,000 (4140)	.094 (2.39)		110 (150)	3.38 (85.85)	2.50 (63.50)	0.50 (12.70)	0.63 (16)	1.18 (30)
CK6602	F375C	60,000 (4140)	.125 (3.18)		110 (150)	3.75 (95.25)	2.62 (66.55)	0.53 (13.46)	0.75 (19)	1.18 (30)
CK9902	F562C	60,000 (4140)	.187 (4.75)		160 (220)	4.62 (117.35)	3.38 (85.85)	0.81 (20.57)	1.12 (29)	1.50 (38)

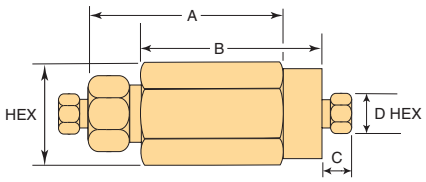

Check and Excess Flow Valve Dimensions

Note:
† Distance across flats

** Maximum pressure rating is based on the lowest rating of any component. Actual working pressure may be determined by tubing pressure rating, if lower. All dimensions for reference only and subject to change. For prompt service, Parker Autoclave stocks select products. Consult your local representative.

Tel: +45 63 12 83 00 | Email: ps@hymatik.com | www.hymatik.com | Hvidkaervej 27a, DK-5250 Odense SV, Denmark

Line Filters

High Pressure - Pressures to 60,000 psi (4137 bar)

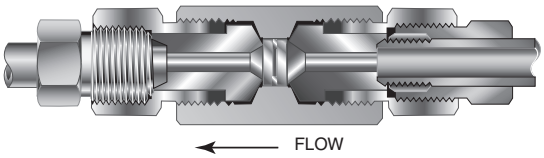

CFL Series
Dual Disc Line Filters

Dual-Disc Line Filters are utilized in numerous industrial, chemical processing, aerospace, nuclear and other applications. With the dual-disc design, large contaminant particles are trapped by the upstream filter element before they can reach and clog the smaller micron-size downstream element. Filter elements can be easily replaced.

Materials: Body, Cover, Gland Nut: CW 316 Stainless Steel.

Filter Element: 316L Stainless Steel, Sintered Disc Type. Downstream//upstream micron size 35/65 is standard. 5/10 or 10/35 also available when specified. Other element combinations available on special order.

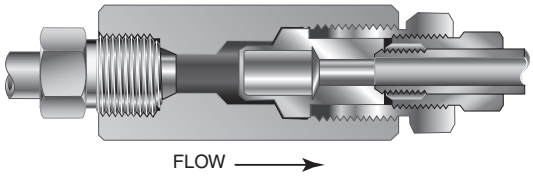

CF Series
Cup Type Line Filters

High Flow Cup-Type Line Filters are recommended in high pressure systems requiring both high flow rates and maximum filter surface area. Widely used in the industrial and chemical processing fields, the cup design offers as much as six times the effective filter area as compared to disc-type units. In addition, the filter elements can be quickly and easily replaced.

Materials: Body, Cover, Gland Nut: CW 316 Stainless Steel.

Filter Element: 316L Stainless Steel, Sintered Cup Type. Standard elements available in choice of 5, 35 or 65 micron sizes. Note: Filter ratings are nominal.

Temperature Range: Both Models: Oxidizing Fluids: 750°F (400°C) maximum Non-Oxidizing Fluids: 900°F (480°C) -423°F (-252°C) minimum

Spare Parts: Filter Elements are only replaceable part with either filter type. See chart on page 14 for Filter Element part numbers.

NOTE 1: All filters furnished complete with connection components unless otherwise specified. All dimensions for reference only and subject to change. For optional materials, see Technical Section

NOTE 2: Parker Autoclave Engineers disc and cup type filters are designed to filter small amounts of process particles. It is recommended that all fluids are thoroughly cleaned prior to entering the higher pressure system.

NOTE 3: Special material filters may be supplied with four flats in place of standard hex.

NOTE 4: Pressure differential not to exceed 1,000 psi (69 bar) in a flowing condition. Filter Replacement is recommended.

NOTE 5: Larger micron size filter element is installed on the upstream (inlet) side.

Tel: +45 63 12 83 00 | Email: ps@hymatik.com | www.hymatik.com | Hvidkaervej 27a, DK-5250 Odense SV, Denmark

Dual Disc Line Filters: High Pressure, 60,000 psi (4140 bar)

Catalog Number	Orifice inches (mm)	Micron Size**	Replacement Filter P/N	Cover Gland Torque ft. lb (Nm)	Effective Filter Elements Area in^2 (mm^2)	Dimensions - inches (mm)				
						A	B	C	D Typical	Hex
CLF4400	.094 (2.39)	35/65	65um = P-0803 35um = P-0804 10um = P-1738 5um = P-1028	80 (110)	0.07 (45.16)	4.75 (20.66)	3.00 (76.20)	0.50 (12.70)	0.63 (16)	1.12 (28)
CLF4400-5/10		5/10								
CLF4400-10/35		10/35								
CLF6600	.125 (3.18)	35/65	65um = P-0803 35um = P-0804 10um = P-1738 5um = P-1028	120 (160)	0.07 (45.16)	5.12 (130.16)	3.00 (76.20)	0.53 (13.46)	0.75 (19)	1.12 (28)
CLF6600-5/10		5/10								
CLF6600-10/35		10/35								
CLF9900	.187 (4.76)	35/65	65um = P-0650 35um = P-0805 10um = P-1785 5um = P-1650	150 (200)	0.15 (96.77)	5.81 (147.67)	3.38 (86.66)	0.81 (20.68)	1.12 (28)	1.38 (35)
CLF9900-5/10		5/10								
CLF9900-10/35		10/35								

Cup Type Line Filters: High Pressure, 60,000 psi (4140 bar)

CF4-5	.094 (2.39)	5	240A-2916	125 (170)	1.29 (832.26)	4.19 (106.42)	3.38 (85.85)	0.50 (12.70)	0.63 (16)	1.38 (35)
CF4-35		35	241A-2916							
CF4-65		65	242A-2916							
CF6-5	.125 (3.18)	5	240A-2916	125 (170)	1.29 (832.26)	4.62 (117.35)	3.62 (91.94)	0.53 (13.46)	0.75 (19)	1.38 (35)
CF6-35		35	241A-2916							
CF6-65		65	242A-2916							
CF9-5	.187 (4.76)	5	240A-2916	110 (150)	1.29 (832.26)	5.25 (133.35)	4.06 (103.12)	0.81 (20.58)	1.12 (28)	1.50 (38)
CF9-35		35	241A-2916							
CF9-65		65	242A-2916							

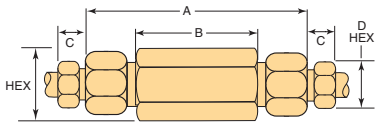

Dual Disc Line Filter Dimensions

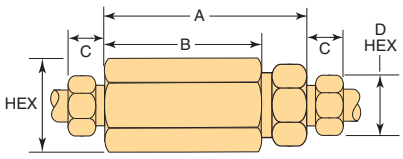

Cup Type Line Filter Dimensions

** Other micron sizes available on special order. Change last digits of the catalog number accordingly.

For optional materials, see Needle Valve Options section.

*Maximum pressure rating is based on the lowest rating of any component.

Actual working pressure may be determined by tubing pressure rating, if lower. All dimensions for reference only and subject to change.

For prompt service, Parker Autoclave Engineers stocks select products. Consult your local representative.

Tel: +45 63 12 83 00 | Email: ps@hymatik.com | www.hymatik.com | Hvidkaervej 27a, DK-5250 Odense SV, Denmark

Anti-Vibration Collet Gland Assembly

Series KCGL High Pressure - Pressures to 60,000 psi (4140 bar)

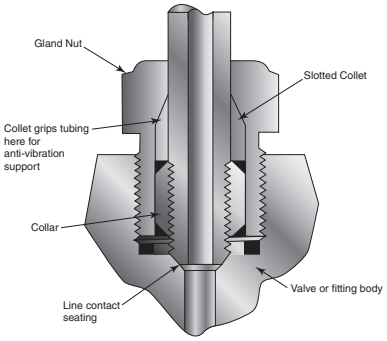

Series KCGL
60,000 psi (4137 bar)

Note:

1) To order valve and fitting components with anti-vibration assemblies add -K to catalog numbers.

2) Special material assemblies are normally supplied with four flats in place of standard hex.

3) See Tools and Installation Catalog for Installation Instructions including Torque Specifcations.

Series KCGL (sizes to 9/16" (14.29 mm)

For extreme conditions of vibration and/or shock in tubing systems, such as locating valve or fitting on an unsupported line near a compressor, Parker Autoclave Engineers coned-and-threaded connections are offered with the Anti-Vibration Collet Gland Assemblies. Completely interchangeable with standard Parker Autoclave Engineers high pressure connections, the Collet Gland Assemblies provide equally effective pressure handling capability.

In standard connection systems, the bending stresses on the threaded area of the tubing imposed by excessive vibration or movement may cause premature fatigue failure of the tubing at the back of the thread. By moving the stress concentration back to the unthreaded part of the tubing and providing a wedge-type gripping action, the Parker Autoclave Engineers anti-vibration collet gland assembly strengthens the entire structure. With stress concentration reduced and overall stress level maintained well below the endurance limit of the material, the result is extended vibrational fatigue life.

A less complex and more economical design than other vibration-resistant connections, the Collet Gland Assembly utilizes the same coned-and-threaded features of Parker Autoclave Engineers high pressure connections. In Series KCGL the gland nut is recessed to accommodate a tapered, slotted collet that grips the tubing at a point behind the threaded area of the tubing.The design provides a slight difference in angles between the collet and the corresponding taper of the gland nut. As the nut is tightened, it acts to wedge the tapered end of the collet into a gripping engagement with the tubing and, at the same time, forces the collar and tubing assembly into line contact with the connection seat.

Anti-Vibration Collet Gland Assembly Details:

Catalog Number	Part	Outside Diameter Tubing Size Inches (mm)	Dimensions: Inches (mm)		
			A	B	Hex
KCGL40-316	Complete Assembly	1/4 (6.35)	0.50 (12.70)	0.81 (20.58)	5/8 (16)
KCGL60-316	Complete Assembly	3/8 (9.53)	0.62 (15.75)	1.12 (28.45)	13/16 (21)
KCGL90-316	Complete Assembly	9/16 (14.29)	1.00 (25.40)	1.50 (38.10)	1-3/16 (30)

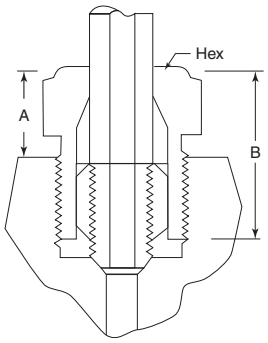

Series KCGL
60,000 psi (4140 bar)

Standard Parker Autocalve Engineers collar not included in Antivibration Gland assembly (chart) if AV Gland ordered separately.

All dimensions for reference only and subject to change.
For prompt service, Parker Autoclave Engineers stocks select products. Consult your local representative.

Tel: +45 63 12 83 00 | Email: ps@hymatik.com | www.hymatik.com | Hvidkaervej 27a, DK-5250 Odense SV, Denmark

Anti-Vibration Collet Gland Assembly

Series KCBGLX High Pressure - 1" Only to 43,000 psi (2965 bar)

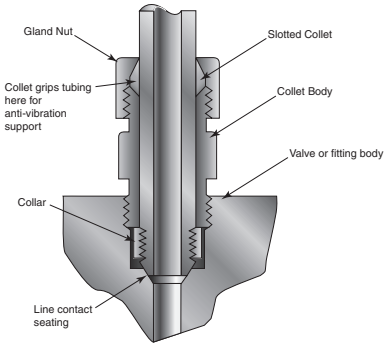

Series KCBGLX (1" only)
Pressures to 43,000 psi (2965 bar)

Series KCBGLX: 1" High Pressure (compatible with F1000C43 connection)

The 1" High Pressure Fittings and Valves utilize the 1" Medium Pressure Gland and Collar to secure the tubing into the connection. As such the Antivibration Gland assembly has a slightly different design from the typical “High Pressure” connection and has the collar in front of the gland nut.

Series KCBGLX extends the gland nut to provide room for the tapered, slotted collet and collet nut. The design provides a slight difference in angles between the collet and the corresponding taper of the gland nut. As the nut is tightened, it acts to wedge the tapered end of the collet into a gripping engagement with the tubing.

Material

316 SS with bonded dry film molybdenum disulfide to help prevent galling. Additional thread lubricant not needed.

Note:

1) To order valve and fitting components with anti-vibration assemblies add **-K** to catalog numbers.
2) Special material assemblies are normally supplied with four flats in place of standard hex.
3) See Tools and Installation Catalog for Installation Instructions including Torque Specifcations.

1" Anti-Vibration Collet Gland Assembly Details:

Catalog Number	Part	Outside Diameter Tubing Size Inches (mm)	Dimensions: Inches (mm)		
			A	B	Hex
KCBGLX160-316MC	Complete Assembly	1.0 (25.40)	1.69 (25.40)	2.38 (60.45)	1-1/2" (38)

All dimensions for reference only and subject to change.
For prompt service, Parker Autoclave Engineers stocks select products. Consult your local representative.

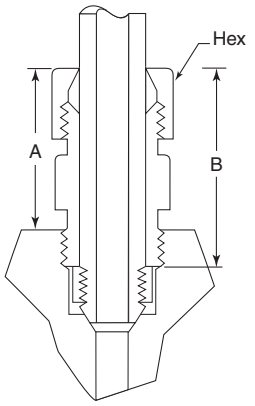

Series KCBGLX
Pressures to 43,000 psi (2965 bar)

Standard Parker Autocalve Engineers collar not included in complete assembly if ordered separately.

Always use back-up wrench on collet body when tightening collet gland nut to prevent over-torquing connection.

Tel: +45 63 12 83 00 | Email: ps@hymatik.com | www.hymatik.com | Hvidkaervej 27a, DK-5250 Odense SV, Denmark

Fittings and Tubing

Ultra High Pressure Cone & Thread

Pressures to 150,000 psi (10350 bar)
Includes Check Valves & Couplings



Principle of Operation:

Parker Autoclave Engineers High & Ultra High Pressure connections are a refinement of the original cone & thread joint which has been the standard connection in high pressure technology since its development by an agency of the US Government over 90 years ago. This design set precedence of quality and reliability found in all Parker Autoclave Engineers products to this day.

The pressure handling capabilities of this connection design have been applied successfully to control pressures up to 150,000 psi. All-metal sealing and working temperatures from 0° to 600°F (-18° to 315°C), along with a variety of different material options make this connection one of the most versatile ever. Fittings and tubing found in this section are designed using ASME B31.3 Chapter IX standards to be compatible with all of our Ultra High Pressure Valve and Fitting configurations.

Ultra High Pressure Fittings and Tubing Features:

- Utilize "C100 and C150" Style Ultra High Pressure Coned-and-Threaded connections (see Tools & Installation for port dimensions)
- Available sizes are 1/4, 3/8, 5/16, and 9/16 inch nominal outside diameter tubing
- Fittings manufactured using UNS S31600, 316 Stainless Steel or UNS S15500 15-5PH (as required) stainless steel material, cold worked to Parker Autoclave proprietary standards.
- Operating Temperatures from 0°F to 600°F (-18° to 315°C)
- Tubing Material for 100,000 psi service is HP160 SS (Autofrettage is standard), 150,000 psi Tubing material is UNS S31600/S31603 Cold Worked 316/316L Stainless Steel
- Anti-vibration connection components available, see pages 11 & 12

All Parker Autoclave Engineers fittings are marked with manufacturers name, part number, material, heat code and maximum pressure for complete traceability.

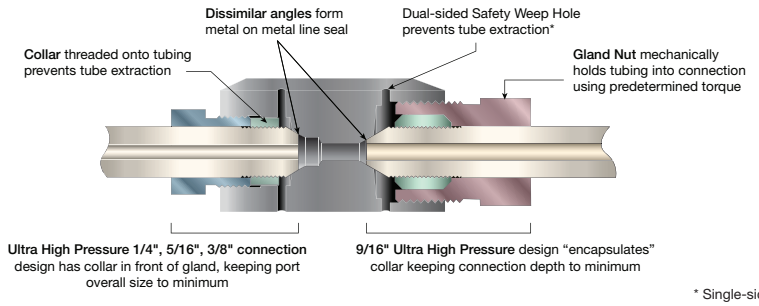

* Single-sided on Round or Hex parts

ENGINEERING YOUR SUCCESS.

Fittings

Ultra High Pressure Tubing - Pressures to 150,000 psi (10350 bar)

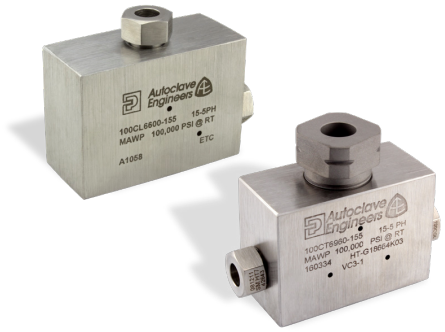

Parker Autoclave Engineers Ultra High Pressure Cone & Thread Fittings, Couplings, Check Valves and 100VM and 150V Valves utilize the F Style (with C100 or C150 designations) Cone & Thread Connection Detail (see Tools & Installation brochure for dimensions).

Ultra High Pressure Connection Components:

All valves and fittings are supplied complete with appropriate gland and tubing collar. To order these components separately, use part numbers listed below. When using plug, collar is not required. Tubing Pressure Caps can be found in Adapter brochure.

Connection Type	Gland	Collar	Plug	Connection Components (industry Standard)
			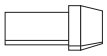	
F250C100 (1/4" 100K) F375C100 (3/3" 100K) F312C150 (5/16" 150K)	100CGL40 100CGL60 CGL50	100CCL40 100CCL60 CCL50	100CP40 100CP60 CP50	The F250C100 & F375C100 connections are for use in valves and fittings up to 100,000 psi (6900 bar). The F312C150 5/16" connection is used in both 100,000 psi and 150,000 psi (10350 bar) fittings. This design has the collar out in from of the gland nut similar to Medium Pressure Fittings but with longer threads.

			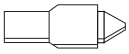	
F562C100 (9/16" 100K)	AGL90-155	ACL90-155	AP90-155	The F562C100 Connection is similar to te 9/16" High Pressure where the collar is surrounding by the gland nut but all materials used need to be made with 15-5PH material or similar strength.

Notes:
To ensure proper fit use Parker Autoclave Engineers tubing.
For gland nut hex sizes and torque values, see "Tools and Installation" brochure.
All Cone and Thread ports MUST utilize weep holes for safety.

Tel: +45 63 12 83 00 | Email: ps@hymatik.com | www.hymatik.com | Hvidkaervej 27a, DK-5250 Odense SV, Denmark

Elbow

Catalog Number	Connection Type	Outside Diameter Tube	Pressure Rating psi (bar)*	Orifice Size	Dimensions - inches (mm)						Block Thickness
					A	B	C	D Typical	E	F	
100CL4400	F250C100	1/4 (6.35)	100,000 (6900)	.094 (2.39)	2.12 (53.85)	3.00 (76.20)	0.52 (13.21)	0.75 (19.05)	1.50 (38.10)	1.50 (38.10	1.38 (35.05)
100CL6600-155	F375C100	3/8 (9.53)	100,000 (6900)	.125 (3.18)	2.12 (53.85)	3.00 (76.20)	0.52 (13.21)	0.75 (19.05)	1.50 (38.10)	1.50 (38.10	1.38 (35.05)
100CL9900-155AP	F562C100	9/16 (7.94)	100,000 (6900)	.188 (4.78)	.188 (4.78)	2.62 (66.55)	0.81 (20.57)	1.19 (30.23)	1.12 (28.45)	1.88 (47.75	1.50 (38.10)
CL5500	F312C150	5/16 (7.94)	150,000 (10350)	.094 (2.39)	2.12 (53.85)	3.00 (76.20)	0.52 (13.21)	0.75 (19.05)	1.50 (38.10)	1.50 (38.10	1.38 (35.05)

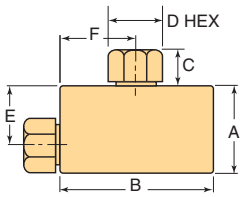

Note: Fittings such as 45° elbows, reducer elbows, and reducer 45° elbows are available upon request. For mounting hole option add suffix - **PM** to catalog number, consult factory for mounting hole dimensions.

*Maximum pressure rating is based on the lowest rating of any component. Actual working pressure may be determined by tubing pressure rating, if lower. All dimensions for reference only and subject to change. For prompt service, Parker Autoclave Engineers stocks select products. Consult your local representative.

Tee

Catalog Number	Connection Type	Outside Diameter Tube	Pressure Rating psi (bar)*	Orifice Size	Dimensions - inches (mm)						Block Thickness
					A	B	C	D Typical	E	F	
100CT4440	F250C100	1/4 (6.35)	100,000 (6900)	.094 (2.39)	2.12 (53.85)	3.00 (76.20)	0.52 (13.21)	0.75 (19.05)	1.50 (38.10)	1.50 (38.10)	1.38 (35.05)
100CT6660-155	F375C100	3/8 (9.53)	100,000 (6900)	.125 (3.18)	2.12 (53.85)	3.00 (76.20)	0.52 (13.21)	0.75 (19.05)	1.50 (38.10)	1.50 (38.10)	1.38 (35.05)
100CT9990-155AP	F562C100	9/16 (7.94)	100,000 (6900)	.188 (4.78)	2.12 (53.85)	2.62 (66.55)	0.81 (20.57)	1.19 (30.23)	1.38 (35.05)	1.31 (33.27)	1.50 (38.10)
CT5550	F312C150	5/16 (7.94)	150,000 (10350)	.094 (2.39)	2.12 (53.85)	3.00 (76.20)	0.52 (13.21)	0.75 (19.05)	1.50 (38.10)	1.50 (38.10	1.38 (35.05)

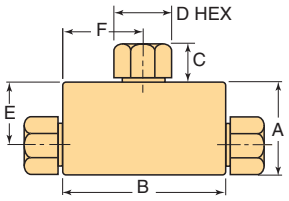

*Maximum pressure rating is based on the lowest rating of any component. Actual working pressure may be determined by tubing pressure rating, if lower. All dimensions for reference only and subject to change. For prompt service, Parker Autoclave Engineers stocks select products. Consult your local representative.

Cross

Catalog Number	Connection Type	Outside Diameter Tube	Pressure Rating psi (bar)*	Orifice Size	Dimensions - inches (mm)						Block Thickness
					A	B	C	D Typical	E	F	
100CX4444	F250C100	1/4 (6.35)	100,000 (6900)	.094 (2.39)	3.00 (76.20)	3.00 (76.20)	0.52 (13.21)	0.75 (19.05)	1.50 (38.10)	1.50 (38.10)	1.38 (35.05)
100CX6666-155	F312C150	3/8 (9.53)	100,000 (6900)	.125 (3.18)	3.00 (76.20)	3.00 (76.20)	0.52 (13.21)	0.75 (19.05)	1.50 (38.10)	1.50 (38.10)	1.38 (35.05)
100CX9999-155AP	F562C100	9/16 (7.94)	100,000 (6900)	.188 (4.78)	2.75 (69.85)	2.62 (66.55)	0.81 (20.57)	1.19 (30.23)	1.38 (35.05)	1.31 (33.27)	1.50 (38.10)
CX5555	F312C150	5/16 (7.94)	150,000 (10350)	.094 (2.39)	3.00 (76.20)	3.00 (76.20)	0.52 (13.21)	0.75 (19.05)	1.50 (38.10)	1.50 (38.10	1.38 (35.05)

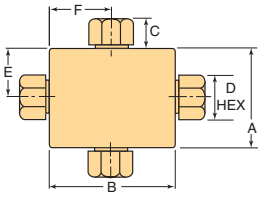

*Maximum pressure rating is based on the lowest rating of any component. Actual working pressure may be determined by tubing pressure rating, if lower. All dimensions for reference only and subject to change. For prompt service, Parker Autoclave Engineers stocks select products. Consult your local representative.

Bulkhead Coupling

Catalog Number	Connection Type	Outside Diameter Tube	Pressure Rating psi (bar)*	Orifice Size	Dimensions - inches (mm)						
					A	B	C	D Typical	E	F Hex	G Thickness
100BF44UU	F250C100	1/4 (6.35)	100,000 (6900)	.094 (2.39)	2.12 (53.85)	3.25 (82.55)	0.52 (13.21)	0.75 (19.05)	1.38 (35.05)	2.00 (50.80)	0.38 (9.65)
100BF66UU-155	F375C100	3/8 (9.53)	100,000 (6900)	.125 (3.18)	2.12 (53.85)	3.25 (82.55)	0.52 (13.21)	0.75 (19.05)	1.38 (35.05)	2.00 (50.80)	0.38 (9.65)
100BF99UU-155AP	F562C100	9/16 (7.94)	100,000 (6900)	.188 (4.78)	1.69 (42.93)	2.75 (69.85)	0.81 (20.57)	1.19 (31)	1.00 (25.40)	1.88 (47.75)	0.38 (9.65)
150BF55UU	F312C150	5/16 (7.94)	150,000 (10350)	.094 (2.39)	2.12 (53.85)	3.25 (82.55)	0.52 (13.21)	0.75 (19.05)	1.38 (35.05)	2.00 (50.80)	0.38 (9.65)

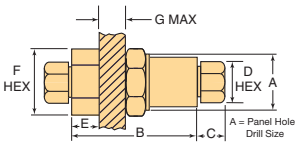

*Maximum pressure rating is based on the lowest rating of any component. Actual working pressure may be determined by tubing pressure rating, if lower. All dimensions for reference only and subject to change. For prompt service, Parker Autoclave Engineers stocks select products. Consult your local representative.

Panel Hole Tolerance : ± .031

Tel: +45 63 12 83 00 | Email: ps@hymatik.com | www.hymatik.com | Hvidkaervej 27a, DK-5250 Odense SV, Denmark

Straight Coupling / Union Coupling (see assembly drawing below)

Catalog Number	Connection Type	Outside Diameter Tube	Pressure Rating psi (bar)*	Orifice Size	Dimensions - inches (mm) A	B	C	D Typical	Coupling Type
100F44UU 100UF44UU	F250C100	1/4 (6.35)	100,000 (6900)	.094 (2.39)	1.12 (28.45)	2.62 (66.55)	0.52 (13.21)	0.75 (19.05)	Straight Union
100F66UU-155 100UF66UU-155	F375C100	3/8 (9.53)	100,000 (6900)	.125 (3.18)	1.12 (28.45)	2.62 (66.55)	0.52 (13.21)	0.75 (19.05)	Straight Union
100F99UU-155AP 100UF99UU-155AP	F562C100	9/16 (7.94)	100,000 (6900)	.188 (4.78)	1.38 (35.05)	2.19 (55.63)	0.81 (20.57)	1.19 (30.23)	Straight Union
150F55UU 150UF55UU	F312C150	5/16 (7.94)	150,000 (10350)	.094 (2.39)	1.12 (28.45)	2.62 (66.55)	0.52 (13.21)	0.75 (19.05)	Straight Union

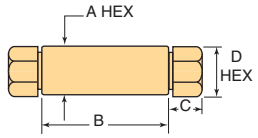

Note: Union Couplings are designed with a removable seat insert allowing disassembly and tubing removal without the necessity of loosening other items in a line.

*Maximum pressure rating is based on the lowest rating of any component. Actual working pressure may be determined by tubing pressure rating, if lower. All dimensions for reference only and subject to change. For prompt service, Parker Autoclave Engineers stocks select products. Consult your local representative.

Union Coupling Assembly

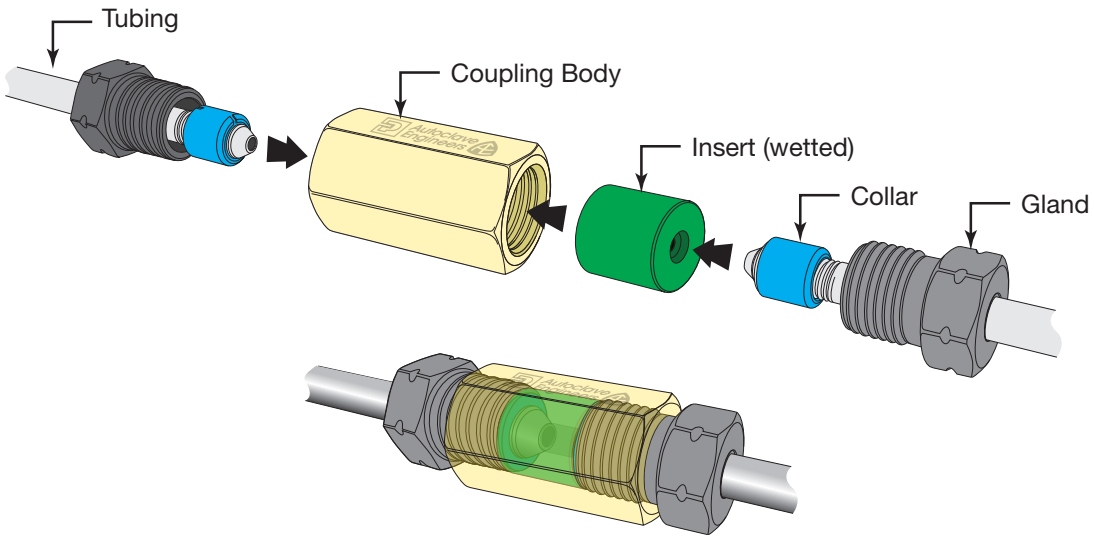

Assembled Union Coupling

Union vs. Straight Coupling Comparison

In much the same as with a traditional Pipe Union, the PAE Union Coupling is used to easily disassemble tubing runs when valves or fittings need to be replaced after original installation. The Body and Insert are two different pieces in the same assembly. The body can slide down tubing leaving only the insert and the tubing tips engaged. Then with only minimal tube shift, the insert drops out allowing the tubing to be removed avoiding the need to disassemble multiple tubing sections from closest elbow.

Note: When Special Materials are requested, the only material that is changed is the Insert (wetted).

Tubing

Ultra High Pressure Tubing - Pressures to 150,000 psi (10350 bar)



Parker Autoclave Engineers offers a selection of austenitic cold drawn stainless steel tubing designed to match the performance standards of Parker Autoclave valves and fittings. Parker Autoclave ultra high pressure tubing is manufactured of 316/316L (UNS S31600/S31603) or HP160 (100Ksi only) specifically for high pressure applications requiring both strength and corrosion resistance. The tubing is furnished in random lengths between 20 feet (6 meters) and 26.5 feet (8.0 meters). The average is 24 feet (7.3 meters). Our HP160 tubing was designed by Parker Autoclave Engineers specifically for High Cyclic use such as Waterjet cutting machines. Special longer lengths are available. Consult factory.

Inspection and Testing:

Parker Autoclave Engineer's ultra high pressure tubing is inspected to assure freedom from seams, laps, fissures or other flaws, as well as carburization or intergranular carbide precipitation. The outside and inside diameters of the tubing are controlled within close tolerances including runout. Sample pieces of tubing for each lot are tested to confirm mechanical properties. Hydrostatic testing is also performed on a statistical basis and is conducted at the working pressure of the tube. Parker Autoclave will perform 100% hydrostatic testing up to 1.5 times working pressure at additional cost if desired.

Special Material:

In addition to the type 316/316L and HP160 High Cycle tubing listed in this section, Parker Autoclave Engineers has a limited stock of hard-to-obtain non-standard lengths of exotic material tubing.

Temperature Capability:

Ultra High Pressure Tubing is capable of temperatures from -0° to 600°F. Please reference Technical Brochure for material, temperature, and bending data. Consult Factory for assistance with tubing applications below 0°F or above 600°F (-18° or 315°C)

Tubing Tolerance:

Nominal Tubing Size inches (mm)	Tolerance/Outside Diameter inches (mm)
1/4 (6.35)	.248/.243 (6.30/6.17)
3/8 (9.53)	.370/.365 (9.40/9.27)
9/16 (14.29)	.557/.552 (14.15/14.02)
5/16 (7.94)	.310/.306 (7.87/7.77)

Note:
Standard Tubing is manufactured in accordance with ASME B31.3 Chapter IX standards using UNS S31600/S31603, 316/316L or HP160 Stainless material, cold worked to Parker Autoclave proprietary standards.

Tubing outside diameter dimensions do not meet standard commercial tubing tolerances. Tubing outside dimensions are specifically chosen to meet tube threading die requirements.

Parker Autoclave Engineers components and tubing are designed as a "complete system" for safety and our fittings will not be compatible with standard "commercial" tubing.

Autofrettage for High Pressure High Cycle (HPHC) applications:

If high cycle fatigue life is a concern, Parker Autoclave Engineers can supply tubing which has been autofrettaged for improved fatigue resistance. For internally pressurized tubing, **autofrettage** is a method by which the inner wall of the tube is precompressed to reduce the tube operating bore stresses, thereby increasing cycle life and increasing the life span of the tubing. (every application is different and while life span increases of 40% have been reported, we cannot guarantee any specific increase in tubing life.)

Tel: +45 63 12 83 00 | Email: ps@hymatik.com | www.hymatik.com | Hvidkaervej 27a, DK-5250 Odense SV, Denmark

Ultra High Pressure Tubing Details:

Catalog Number	Tube Material	Fits Connection Type	Tube Size inches (mm)			Flow Area in^2 (mm^2)	Working Pressure psi (bar)*			
			Outside Diameter	Inside Diameter	Wall Thickness		-100 to 100°F (-73 to 38°C)	200°F (93°C)	400°F (204°C)	600°F (316°C)
MS15-202	HP160	F250C100	1/4 (6.35)	0.083 (2.11)	0.083 (2.11)	0.005 (3.23)	100,000 (6900)	83,000 (5727)	72,000 (4965)	65,000 (4480)
MS15-201	HP160	F375C100	3/8 (9.63)	0.125 (3.18)	0.125 (3.18)	0.012 (7.74)	100,000 (6900)	83,000 (5727)	72,000 (4965)	65,000 (4480)
MS15-210	HP160	F562C100	9/16 (14.29)	0.188 (4.78)	0.187 (4.75)	0.028 (18.06)	100,000 (6900)	83,000 (5727)	72,000 (4965)	65,000 (4480)
MS15-082	316SS	F312C150	5/16 (7.94)	0.062 (1.57)	.125 (3.18)	.003 (1.94)	150,000 (10350)	150,000 (10350)	144,400 (9956)	136,350 (9401)

Note:
100,000 psi HP160 tubing is Autofrettaged as standard. (see Technical section: Pressure Cycling for explanation of “Autofrettage”.
*Maximum pressure rating is based on the lowest rating of any component. Actual working pressure may be determined by tubing pressure rating, if lower.
All dimensions for reference only and subject to change. For prompt service, Parker Autoclave Engineers stocks select products. Consult your local representative.

Ultra High Pressure Connection: Step by Step Assembly Instructions

Step 1	Step 2	Step 3
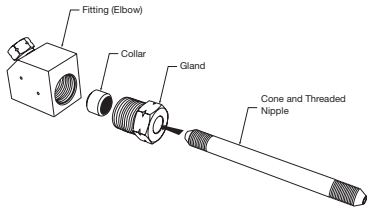	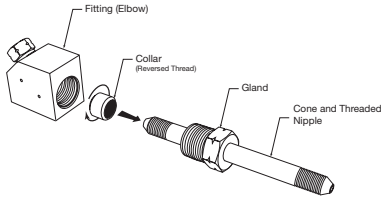	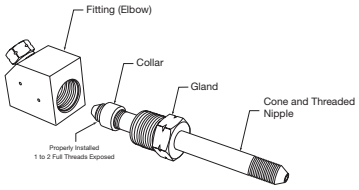
Insert Coned and Threaded Nipple through Gland (Typical Tee Fitting Assembly consisting of Fitting Body, Collar, Gland, and Coned and Threaded Nipple or Tube End.)	Thread Collar turning (Reverse Threaded to prevent rotation during torque process) onto Coned and Threaded Nipple end.	For proper Collar placement, thread Collar onto Nipple leaving 1 to 2 full threads exposed on Fitting side of Collar. Lubricate Gland Threads and Collar Contact Area with anti-seize compound and tube tip with process compatible lubricant (do not use metal-flake type)

Step 4	Step 5	Ultra High Pressure Gland Torque
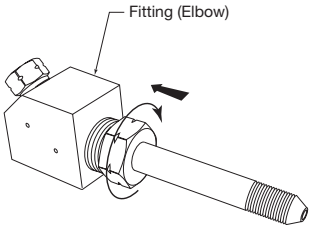	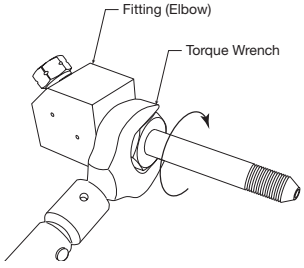	For 316/316L SS, and HP160 Tubing and Adapters
Insert Tube/Gland assembly into Fitting body, turning clockwise approximately 4-5 threads (if unable to turn full distance by hand, look for misalignment issues with tubing and correct for proper seal).	Use Torque Wrench to properly set (see chart in next frame) Cone & Thread Connections. (Available with wrench adapters in Tools and Installation brochure)	

Fitting Size	Required Torque ft-lb (N.m)
1/4" UHP	50 (68)
3/8" UHP	105 (143)
9/16" UHP	125 (170)
5/16" UHP	70 (95)

For torques or optional materials (lower pressures), see Tools and Installation Catalog 02-0149SE

*9/16" Connection will have collar inside Gland Nut but assembles using same process as shown.

Tel: +45 63 12 83 00 | Email: ps@hymatik.com | www.hymatik.com | Hvidkaervej 27a, DK-5250 Odense SV, Denmark

Coned-and-Threaded Nipples

Ultra High Pressure - Pressures to 150,000 psi (10350 bar)



For rapid system make-up, Parker Autoclave Engineers supplies pre-cut, coned-and-threaded nipples in various sizes and lengths for Parker Autoclave Engineers medium pressure valves and fittings.

Special Lengths:

In addition to the standard lengths listed in the table below, nipples are available in any custom length. Consult factory.

Material:**

Catalog numbers in table with "**-HP**" suffix refer to HP160 material (100,000 psi max) and with "**-316**" suffix refer to 316/316L Stainless Steel UNS S31600/S31603 cold worked material.

Nipple Details:

Catalog Number *(316 Stainless Steel)*				
Tube Size inches (mm)	Fits Connection Type			
	F312C150	F312C150	F562C	F312C150
Outside Diameter	1/4 (6.35)	3/8 (9.53)	9/16 (14.29)	5/16 (7.94)
Inside Diameter	.083 (2.11)	.125 (3.18)	.188 (4.78)	.062 (1.57)
Working Pressure at 100°F (38°C) psi (bar)*	100,000 (6900)	100,000 (6900)	100,000 (6900))	150,000 (10350)
Nipple Length inches (mm)				
4.00" (101.60)	100CN4404-HP	100CN6604-HP	100CN9904-HP	CN5504-316
6.00" (152.40)	100CN4406-HP	100CN6606-HP	100CN9906-HP	CN5506-316
8.00" (203.20)	100CN4408-HP	100CN6608-HP	100CN9908-HP	CN5508-316
10.00" (254.00)	100CN44010-HP	100CN66010-HP	100CN99010-HP	CN55010-316
12.00" (304.80)	100CN44012-HP	100CN66012-HP	100CN99012-HP	CN55012-316
14.00" (355.60)	100CN44014-HP	100CN66014-HP	100CN99014-HP	CN55014-316
16.00" (406.40)	100CN44016-HP	100CN66016-HP	100CN99016-HP	CN55016-316
18.00" (457.20)	100CN44018-HP	100CN66018-HP	100CN99018-HP	CN55018-316
20.00" (508.00)	100CN44020-HP	100CN66020-HP	100CN99020-HP	CN55020-316
22.00" (558.80)	100CN44022-HP	100CN66022-HP	100CN99022-HP	CN55022-316
24.00" (609.60)	100CN44024-HP	100CN66024-HP	100CN99024-HP	CN55024-316

Notes:
See High Pressure Tubing section of this brochure or Technical Brochure for pressure ratings at various temperatures.

* Maximum pressure rating is based on the lowest rating of any component. Actual working pressure may be determined by tubing pressure rating, if lower.

All dimensions for reference only and subject to change. For prompt service, Parker Autoclave Engineers stocks select products. Consult your local representative.

Tel: +45 63 12 83 00 | Email: ps@hymatik.com | www.hymatik.com | Hvidkaervej 27a, DK-5250 Odense SV, Denmark

Check Valves

Ultra High Pressure - Pressures to 150,000 psi (10350 bar)

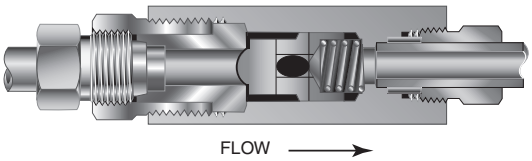

CB Series Ball Check Valve

Ordering part numbers can be found on page 11

Prevent reverse flow **where leak-tight shut-off is not mandatory**. When differential drops below cracking pressure, valve closes. With all-metal components, valve can be used up to 600°F (315°C). See Technical Information section for connection temperature limitations. (**Not for use as relief valve.**)

Ball and poppet assure positive, in-line seating without "chatter". Poppet is designed essentially for axial flow with minimum pressure drop.

Cracking Pressure*: 20 psi (1.38 bar) +/- 30% No optional cracking pressures available.

Temperature Range: With All-Metal components, valve can be used to 600°F (315°C). Minimum standard operating temperature is 0°F (-18°C).

Installation:
Vertical or Horizontal as required. Flow Direction arrow on valve body.

NOTE: For optional material see Technical Brochure. Special material check valves are normally supplied with four flats in place of standard hex.

Material of Construction:

Item #	Description	Material
1	Gland	316 SS
2	Gland Nut	15-5PH
3	Cover	15-5PH
4	Cone Ring	316 SS
5	Ball	Tungsten Carbide
6	Spring	302 SS
7	Check Valve Body	15-5PH

Typical spare parts found in Repair Kits

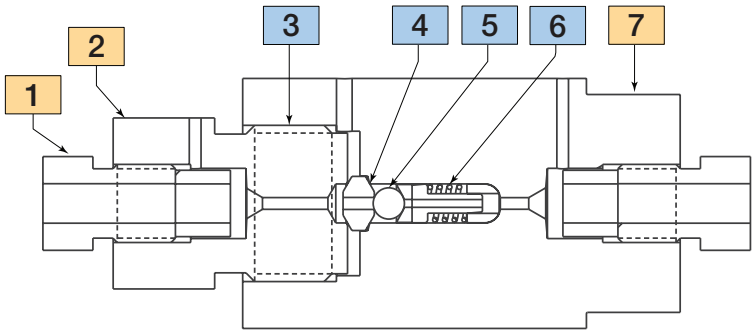

Basic Ball Check Valve Repair Kits:

Check Valves are easily repaired. Add "**R**" to front of valve catalog number for proper repair kit (example: RCB9901) See "Cover Torque" on page 12 for re-assembly.

Include any catalog number suffix marked on original part when ordering repair kit.

Tel: +45 63 12 83 00 | Email: ps@hymatik.com | www.hymatik.com | Hvidkaervej 27a, DK-5250 Odense SV, Denmark

Ball Check Valves

Catalog Number	Fits Connection Type	Pressure Rating psi (bar)**	Orifice inches (mm)	Rated Cv	Dimensions - inches (mm) A	B	C	Body Hex	D
100CB4401*	F250C100	100,000 (6900)	.094 (2.39)	.11	4.53 (114.7)	3.50 (88.90)	0.52 (13.21)	1.75† (44.50)	.75 (19.05)
100CB6601*	F375C100	100,000 (6900)	.094 (2.39)	.11	4.53 (114.7)	3.50 (88.90)	0.52 (13.21)	1.75† (44.50)	.75 (19.05)
100CB9901-155AP*	F562C100	100,000 (6900)	.187 (4.75)	.63	4.62 (117.35)	3.38 (85.85)	0.81 (20.57)	1.12 (28.45)	1.50 (38.10)
100CB5501*	F312C150	100,000 (6900)	.094 (2.39)	.11	4.53 (114.7)	3.50 (88.90)	0.52 (13.21)	1.75† (44.50)	.75 (19.05)
CB5501	F312C150	150,000 (10350)	.094 (2.39)	.11	5.50 (137.7)	4.50 (114.3)	0.52 (13.21)	1.75 (44.50)	.75 (19.05)

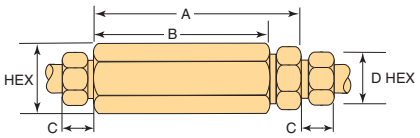

Check Valves

Note:
* Body material is 15-5PH
† Distance across flats

** Maximum pressure rating is based on the lowest rating of any component. Actual working pressure may be determined by tubing pressure rating, if lower. All dimensions for reference only and subject to change. For prompt service, Parker Autoclave stocks select products. Consult your local representative.

Tel: +45 63 12 83 00 | Email: ps@hymatik.com | www.hymatik.com | Hvidkaervej 27a, DK-5250 Odense SV, Denmark

Anti-Vibration Collet Gland Assembly

Series KCBGL Ultra High Pressure - Pressure to 150,000 psi (10342 bar)

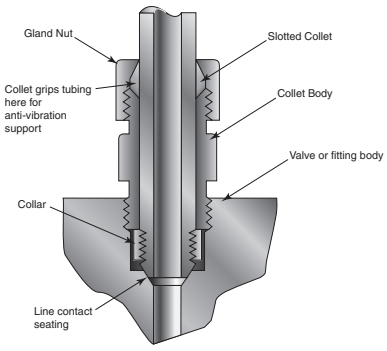

Series KCBGL
Pressures to 150,000 psi (10350 bar)

Series KCBGL: Sizes to 1/4" (6.35 mm), 5/16" (7.94 mm), 3/8" (9.53 mm)

For extreme conditions of vibration and/or shock in tubing systems, such as locating a valve or fitting on an unsupported line near a compressor, Autoclave coned-and-threaded connections are offered with the Anti-Vibration Collet Gland Assemblies. A less complex and more economical design than other vibration-resistant connections, the collet gland assembly utilizes the same coned-and-threaded features of Autoclave high pressure connections.

Series KCBGL extends the gland nut to provide room for the tapered, slotted collet and collet nut. The design provides a slight difference in angles between the collet and the corresponding taper of the gland nut. As the nut is tightened, it acts to wedge the tapered end of the collet into a gripping engagement with the tubing.

Material

316 SS with bonded dry film molybdenum disulfide to help prevent galling. Additional thread lubricant not needed.

Note:

1) To order valve and fitting components with anti-vibration assemblies add **-K** to catalog numbers.
2) Special material assemblies are normally supplied with four flats in place of standard hex.
3) See Tools and Installation Catalog for Installation Instructions including Torque Specifcations.

Anti-Vibration Collet Gland Assembly Details:

Catalog Number	Part	Outside Diameter Tubing Size Inches (mm)	Dimensions: Inches (mm)		
			A	B	Hex
KCBGL40-316MC†	Complete Assembly	.250 (6.35)	1.06 (26.92)	1.65 (41.91)	5/8"
KCBGL50-316MC†	Complete Assembly	.312 (7.94)	1.38 (34.92)	1.88 (47.62)	3/4"
KCBGL60-316MC†	Complete Assembly	.375 (9.53)	1.39 (35.30)	1.84 (46.73)	13/16"

Note: KCBGL anti-vibes are not for use with 9/16" 100,000 psi fittings and valves

All dimensions for reference only and subject to change.
For prompt service, Parker Autoclave Engineers stocks select products. Consult your local representative.

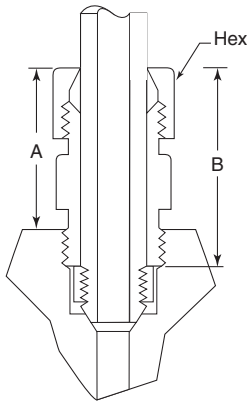

Series KCBGL
Pressures to 150,000 psi (10350 bar)

Standard Parker Autocalve Engineers collar not included in complete assembly if ordered separately.

Tel: +45 63 12 83 00 | Email: ps@hymatik.com | www.hymatik.com | Hvidkaervej 27a, DK-5250 Odense SV, Denmark

Anti-Vibration Collet Gland Assembly

Series KCGL Ultra High Pressure - Pressures to 100,000 psi (6895 bar)

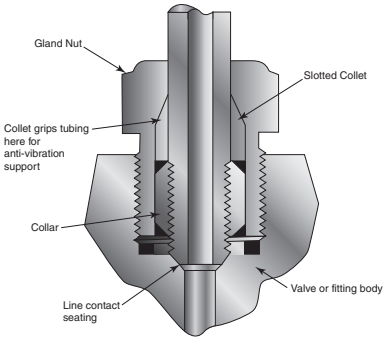

Series KCGL
100,000 psi (6900 bar)

Note:

1) To order valve and fitting components with anti-vibration assemblies add **-K** to catalog numbers.

2) Special material assemblies are normally supplied with four flats in place of standard hex.

3) See Tools and Installation Catalog for Installation Instructions including Torque Specifcations.

Series KCGL (9/16")

For extreme conditions of vibration and/or shock in tubing systems, such as locating valve or fitting on an unsupported line near a compressor, Parker Autoclave Engineers coned-and-threaded connections are offered with the Anti-Vibration Collet Gland Assemblies. Completely interchangeable with standard Parker Autoclave Engineers high pressure connections, the Collet Gland Assemblies provide equally effective pressure handling capability.

In standard connection systems, the bending stresses on the threaded area of the tubing imposed by excessive vibration or movement may cause premature fatigue failure of the tubing at the back of the thread. By moving the stress concentration back to the unthreaded part of the tubing and providing a wedge-type gripping action, the Parker Autoclave Engineers anti-vibration collet gland assembly strengthens the entire structure. With stress concentration reduced and overall stress level maintained well below the endurance limit of the material, the result is extended vibrational fatigue life.

A less complex and more economical design than other vibration-resistant connections, the Collet Gland Assembly utilizes the same coned-and-threaded features of Parker Autoclave Engineers high pressure connections. In Series KCGL the gland nut is recessed to accommodate a tapered, slotted collet that grips the tubing at a point behind the threaded area of the tubing.The design provides a slight difference in angles between the collet and the corresponding taper of the gland nut. As the nut is tightened, it acts to wedge the tapered end of the collet into a gripping engagement with the tubing and, at the same time, forces the collar and tubing assembly into line contact with the connection seat.

Anti-Vibration Collet Gland Assembly Details:

Catalog Number	Part	Outside Diameter Tubing Size Inches (mm)	Dimensions: Inches (mm)		
			A	B	Hex
KCGL90-155	Complete Assembly	9/16 (14.29)	1.00 (25.40)	1.50 (38.10)	1-3/16 (30)

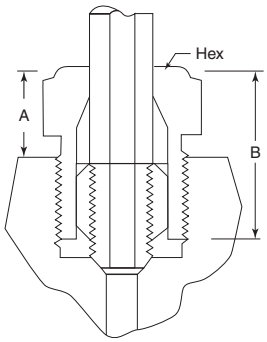

Series KCGL
100,000 psi (6895 bar)

Standard Parker Autocalve Engineers collar not included in Antivibration Gland assembly (chart) if AV Gland ordered separately.

Always use back-up wrench on collet body when tightening collet nut to prevent over-torquing connection.

Note: KCGL Antivibe Gland Assemblies are not for use with 5/16" 150,000 psi or 1/4", 3/8" 100,000 psi fittings or valve
All dimensions for reference only and subject to change.
For prompt service, Parker Autoclave Engineers stocks select products. Consult your local representative.

Tel: +45 63 12 83 00 | Email: ps@hymatik.com | www.hymatik.com | Hvidkaervej 27a, DK-5250 Odense SV, Denmark

Fittings and Nipples

Instrument NPT Pipe Fittings 15,000 psi (1034 bar)

Includes Reducers, Couplings & Check Valves



Principle of Operation:

Parker Autoclave Engineers use high quality UNS S31600/S31603 316/316L material cold worked to our stringent specifications that enable certification of NPT style Instrument Pipe Fittings to a maximum working pressure of 15,000 psi (1050 bar). It's the strength of the material that allows this superior pressure rating and care should be taken to only use with other similar fittings made to the same specification.

Pipe Fitting & Nipple Features:

- 1/4", 3/8" and 1/2" NPT Sizes to 15,000 psi (1034 bar)
- 3/4" and 1" NPT Sizes to 10,000 psi (690 bar)
- Barstock Fittings and Pipe Nipples manufactured using UNS S31600/S31603, 316/316L stainless steel material cold worked to Parker Autoclave proprietary standards
- Operating Temperatures from -423°F (-252°C) to *400°F (204°C)
- Special materials available upon request or when NACE/ISO 15156 requirements demand. See Technical Catalog for more common material options. Note: 316 SS NACE Material (Annealed) reduces pressure rating for all sizes NPT to 10,000 psi MAWP.
- NPT threads made to ANPT (Aerospace) standards and based on requirements of ANSI B1.20.1
- All Parker Autoclave Engineers fittings are marked with manufacturers name, part number, material, heat code and maximum pressure for complete traceability

Fittings and Nipples found in this section are designed using ASME B31.3 Chapter IX High Pressure Piping Standards to be compatible with our 10P and 15P P Series Needle Valves and all of our various Ball Valve configurations. There is a Parker Instrumentation fitting for just about any requirement of fluids under extreme pressure and temperature conditions. For additional conversion adapters, please see our "Adapter" brochure found in our complete catalog or our website.

***Note: NPT Pipe Thread Connections:**

NPT threads must be sealed using a high quality PTFE tape (3 wraps minimum) and/or thread sealant paste product suitable for process temperature. Refer to thread sealant manufacturer's instructions for application instructions.
A good thread lubrication product (metal flake style) capable of process temperatures is also necessary to prevent thread galling. **Sealing performance** may vary based on many factors such as pressure, temperature, media, thread quality, thread material, proper engagement, and proper use of thread sealant. **End user** should limit the number of times an NPT fitting is assembled and disassembled as thread deformation during assembly will result in deteriorating seal quality over time.

Parker Autoclave Engineers

ENGINEERING YOUR SUCCESS.

Pipe Fittings **NPT Threaded -** Pressures to 15,000 psi (1034 bar)



Parker Autoclave Engineers P Series Pipe Fittings are designed for liquid and gas applications. Sizes from 1/4" to 1" NPT are offered. For additional material options please consult our "Technical" brochure further in the catalog or on our website.

Note: When converting to NACE approved (-SOG) 316 SS Annealed material, pressure for ALL sizes (1/4" to 1") of NPT P Series Fittings & Nipples is 10,000 psi.

(See "Technical Brochure" for Pressure/Temperature effect on temperatures above ambient.)

Pipe Elbow

Catalog Number	Connection Type	Pressure Rating psi (bar)*	Orifice inches (mm)	Dimensions - inches (mm)				Block Thickness
				A	B	C	D	
PL4400	1/4" NPT	15,000 (1034)	.42 (10.67)	1.13 (28.58)	1.50 (38.10)	0.75 (19.05)	0.75 (19.05)	0.75 (19.05)
PL6600	3/8" NPT	15,000 (1034)	.56 (14.22)	1.50 (38.10)	2.00 (50.80)	1.00 (25.40)	1.00 (25.40)	1.00 (25.40)
PL8800	1/2" NPT	15,000 (1034)	.69 (17.53)	1.88 (47.75)	3.00 (76.20)	1.25 (31.75)	1.50 (38.10)	1.25 (31.75)
PL12	3/4" NPT	10,000 (690)	.89 (22.61)	2.18 (55.37)	3.00 (76.20)	1.50 (38.10)	1.50 (38.10)	1.38 (35.05)
PL16	1" NPT	10,000 (690)	1.13 (28.58)	2.50 (63.50)	4.12 (104.65)	1.56 (39.67)	2.06 (52.37)	1.75 (44.45)

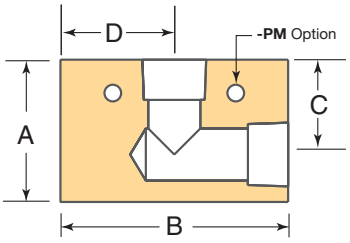

Pipe Elbow

*Maximum pressure rating is based on the lowest rating of any component.
Actual working pressure may be determined by pipe pressure rating, if lower.
All dimensions for reference only and subject to change.

For prompt service, Parker Autoclave Engineers stocks select products. Consult your local representative.

For mounting hole option add suffix **PM** to catalog number.
Consult factory for mounting hole dimensions.

Conversion Adapters can be found in our "Adapter" brochure found further in this catalog or on our website.

Note: NPT (Pipe) Connections:

- NPT threads must be sealed using a high quality PTFE tape and/or paste product. Refer to thread sealant manufacturer's instructions on how to apply thread sealant.
- Sealing performance may vary based on many factors such as pressure, temperature, media, thread quality, thread material, proper thread engagement and proper use of thread sealant.
- Customer should limit the number of times an NPT fitting is assembled and disassembled because thread deformation during assembly will result in deteriorating seal quality over time. When using only PTFE tape, consider using thread lubrication to prevent galling of mating parts.

Note: Special material components are normally supplied with four flats in place of standard hex. *Maximum pressure rating is based on the lowest rating of any component.

Tel: +45 63 12 83 00 | Email: ps@hymatik.com | www.hymatik.com | Hvidkaervej 27a, DK-5250 Odense SV, Denmark

Pipe Tee

Catalog Number	Connection Type	Pressure Rating psi (bar)*	Orifice inches (mm)	Dimensions - inches (mm)				Block Thickness
				A	B	C	D	
PT4440	1/4" NPT	15,000 (1034)	.42 (10.67)	1.13 (28.58)	1.50 (38.10)	0.75 (19.05)	0.75 (19.05)	0.75 (19.05)
PT6660	3/8" NPT	15,000 (1034)	.56 (14.22)	1.50 (38.10)	2.00 (50.80)	1.00 (25.40)	1.00 (25.40)	1.00 (25.40)
PT8880	1/2" NPT	15,000 (1034)	.69 (17.53)	1.88 (47.75)	3.00 (76.20)	1.25 (31.75)	1.50 (38.10)	1.25 (31.75)
PT12	3/4" NPT	10,000 (690)	.89 (22.61)	2.18 (55.37)	3.00 (76.20)	1.50 (38.10)	1.50 (38.10)	1.38 (35.05)
PT16	1" NPT	10,000 (690)	1.13 (28.58)	2.50 (63.50)	4.12 (104.65)	1.56 (39.67)	2.06 (52.37)	1.75 (44.45)

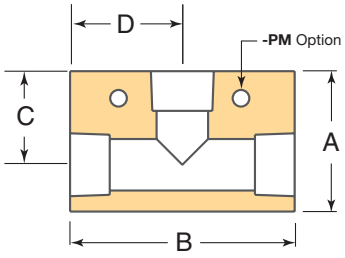

Pipe Tee

*Maximum pressure rating is based on the lowest rating of any component.
Actual working pressure may be determined by pipe pressure rating, if lower. All dimensions for reference only and subject to change.

For prompt service, Parker Autoclave Engineers stocks select products. Consult your local representative.

For mounting hole option add suffix **PM** to catalog number. Consult factory for mounting hole dimensions.

Note: NPT (Pipe) Connections: See Page 2

Pipe Cross

Catalog Number	Connection Type	Pressure Rating psi (bar)*	Orifice inches (mm)	Dimensions - inches (mm)				Block Thickness
				A	B	C	D	
PX4444	1/4" NPT	15,000 (1034)	.42 (10.67)	1.50 (38.10)	1.50 (38.10)	0.75 (19.05)	0.75 (19.05)	0.75 (19.05)
PX6666	3/8" NPT	15,000 (1034)	.56 (14.22)	2.00 (50.80)	2.00 (50.80)	1.00 (25.40)	1.00 (25.40)	1.00 (25.40)
PX8888	1/2" NPT	15,000 (1034)	.69 (17.53)	2.50 (63.50)	3.00 (76.50)	1.25 (31.75)	1.50 (38.10)	1.25 (31.75)
PX12	3/4" NPT	10,000 (690)	.89 (22.61)	3.00 (76.20)	3.00 (76.20)	1.50 (38.10)	1.50 (38.10)	1.38 (35.05)
PX16	1" NPT	10,000 (690)	1.13 (28.58)	3.13 (79.38)	4.12 (104.65)	1.56 (39.67)	2.06 (52.37)	1.75 (44.45)

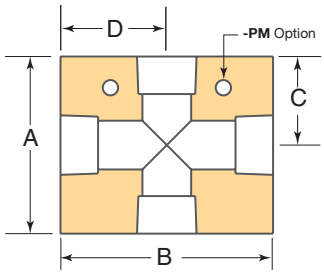

Pipe Cross

*Maximum pressure rating is based on the lowest rating of any component.
Actual working pressure may be determined by pipe pressure rating, if lower.
All dimensions for reference only and subject to change.

For prompt service, Parker Autoclave Engineers stocks select products. Consult your local representative.

For mounting hole option add suffix **PM** to catalog number. Consult factory for mounting hole dimensions.

Note: NPT (Pipe) Connections: See Page 2

Pipe Bulkhead Coupling

Catalog Number	Connection Type	Pressure Rating psi (bar)*	Orifice inches (mm)	Dimensions - inches (mm)				E Maximum
				A	B	C Hex	D	
15BF4488	1/4" NPT	15,000 (1034)	.42 (10.67)	0.94 (23.80)	2.00 (50.80)	1" (25)	0.63 (15.755)	0.38 (9.53)
15BF6688	3/8" NPT	15,000 (1034)	.56 (14.22)	1.13 (28.60)	2.38 (60.500)	1-3/8" (35)	0.79 (20.07)	0.38 (9.53)
15BF88880	1/2" NPT	15,000 (1034)	.69 (17.53)	1.68 (42.67)	2.63 (66.80)	1-7/8" (48)	0.91 (23.11)	0.38 (9.53)
10BF121288	3/4" NPT	10,000 (690)	.89 (22.61)	1.68 (42.67)	2.63 (66.80)	1-7/8" (48)	0.91 (23.1110)	0.38 (9.53)
10BF161688	1" NPT	10,000 (690)	1.13 (28.58)	1.94 (49.28)	3.50 (88.90)	1-7/8"+ (48)	1.50 (38.10)	0.38 (9.53)

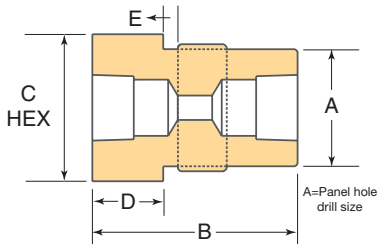

Pipe Bulkhead Coupling

+ Distance across flats

*Maximum pressure rating is based on the lowest rating of any component. Actual working pressure may be determined by pipe pressure rating, if lower.

All dimensions for reference only and subject to change.

For prompt service, Parker Autoclave Engineers stocks select products. Consult your local representative.

Note: NPT (Pipe) Connections: See Page 2

Conversion Adapters can be found in our "Adapter" brochure found further in this catalog or on our website.

Pipe Coupling

Catalog Number	Connection Type	Pressure Rating psi (bar)*	Orifice inches (mm)	Dimensions - inches (mm)	
				A Hex	B
15F4488	1/4" NPT	15,000 (1034)	.42 (10.67)	3/4" (19)	1.50 (38.10)
15F6688	3/8" NPT	15,000 (1034)	.56 (14.22)	1" (25)	1.63 (41.28)
15F8888	1/2" NPT	15,000 (1034)	.69 (17.53)	1-3/16" (30)	2.00 (50.80)
10F121288	3/4" NPT	10,000 (690)	.89 (22.61)	1-3/8" (356)	2.75 (69.90)
10F161688	1" NPT	10,000 (690)	1.13 (28.58)	1-3/4" (45)	2.50 (63.50)

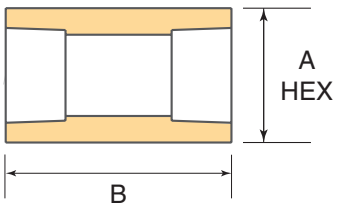

Pipe Coupling

*Maximum pressure rating is based on the lowest rating of any component. Actual working pressure may be determined by pipe pressure rating, if lower.

All dimensions for reference only and subject to change.

For prompt service, Parker Autoclave Engineers stocks select products. Consult your local representative.

Note:
NPT (Pipe) Connections: See Page 2

Tel: +45 63 12 83 00 | Email: ps@hymatik.com | www.hymatik.com | Hvidkaervej 27a, DK-5250 Odense SV, Denmark

Pipe Plugs

Catalog Number	Connection Type	Pressure Rating psi (bar)*	Dimensions - inches (mm)	
			A Hex	B
PP40	1/4" NPT	15,000 (1034)	5/8" (16)	1.00 (25)
PP60	3/8" NPT	15,000 (1034)	3/4" (19)	1.12 (29)
PP80	1/2" NPT	15,000 (1034)	15/16" (24)	1.38 (35)
PP120	3/4" NPT	10,000 (690)	1-3/16" (30)	1.63 (41)
PP160	1" NPT	10,000 (690)	1-3/8" (35)	1.88 (48)

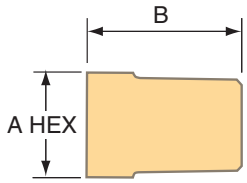

Pipe Coupling

*Maximum pressure rating is based on the lowest rating of any component. Actual working pressure may be determined by pipe pressure rating, if lower.

All dimensions for reference only and subject to change.

For prompt service, Parker Autoclave Engineers stocks select products.
Consult your local representative.

Conversion Adapters can be found in our "Adapter" brochure found further in this catalog or on our website.

Note: NPT (Pipe) Connections: See Page 2

Street Pipe Elbow

Catalog Number	Connection Type	Pressure Rating psi (bar)*	Orifice inches (mm)	Dimensions - inches (mm)				Block Thickness
				A	B	C	D	
SPL4400	1/4" NPT	15,000 (1034)	.219 (5.54)	1.50 (38.10)	1.50 (38.10)	1.13 (28.70)	1.00 (25.40)	0.75 (19.05)
SPL6600	3/8" NPT	15,000 (1034)	.297 (7.54)	1.75 (44.75)	1.50 (38.10)	1.25 (31.75)	1.00 (25.40)	1.00 (25.40)
SPL8800	1/2" NPT	15,000 (1034)	.359 (9.12)	2.25 (57.15)	2.00 (50.80)	1.63 (41.40)	1.25 (31.75)	1.25 (31.75)
SPL12	3/4" NPT	10,000 (690)	.609 (14.47)	2.50 (63.50)	2.62 (66.55)	1.75 (44.45)	1.31 (33.27)	1.50 (38.10)
SPL16	1" NPT	10,000 (690)	.765 (19.43)	4.12 (104.65)	2.50 (63.50)	2.69 (68.33)	1.75 (44.45)	1.75 (44.45)

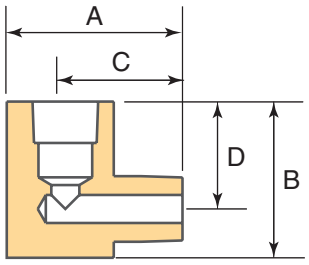

Street Pipe Elbow

*Maximum pressure rating is based on the lowest rating of any component. Actual working pressure may be determined by pipe pressure rating, if lower.

All dimensions for reference only and subject to change.

For prompt service, Parker Autoclave Engineers stocks select products.
Consult your local representative.

Note:
NPT (Pipe) Connections: See Page 2

Tel: +45 63 12 83 00 | Email: ps@hymatik.com | www.hymatik.com | Hvidkaervej 27a, DK-5250 Odense SV, Denmark

Male Pipe Elbow

Catalog Number	Connection Type	Pressure Rating psi (bar)*	Orifice inches (mm)	Dimensions - inches (mm)				Block Thickness
				A	B	C	D	
MPL4400	1/4" NPT	15,000 (1034)	.219 (5.54)	1.50 (38.10)	1.50 (38.10)	1.13 (28.70)	1.13 (28.70)	0.75 (19.05)
MPL6600	3/8" NPT	15,000 (1034)	.297 (7.54)	1.75 (44.75)	1.75 (44.45)	1.25 (31.75)	1.25 (31.75)	1.00 (25.40)
MPL8800	1/2" NPT	15,000 (1034)	.359 (9.12)	2.00 (50.80)	2.00 (50.80)	1.50 (38.10)	1.50 (38.10)	1.00 (25.40)
MPL12	3/4" NPT	10,000 (690)	.609 (14.47)	2.62 (66.55)	2.62 (66.55)	1.75 (44.45)	1.75 (44.45)	1.50 (38.10)
MPL16	1" NPT	10,000 (690)	.765 (19.43)	3.00 (76.20)	3.00 (76.20)	2.13 (54.10)	2.13 (54.10)	1.38 (35.05)

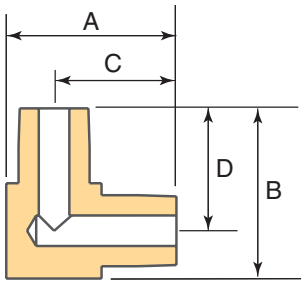

Male Pipe Elbow

*Maximum pressure rating is based on the lowest rating of any component. Actual working pressure may be determined by pipe pressure rating, if lower.

All dimensions for reference only and subject to change.

For prompt service, Parker Autoclave Engineers stocks select products. Consult your local representative.

Note: NPT (Pipe) Connections: See Page 2

Conversion Adapters can be found in our "Adapter" brochure found further in this catalog or on our website.

Male Pipe Tee

Catalog Number	Connection Type	Pressure Rating psi (bar)*	Orifice inches (mm)	Dimensions - inches (mm)				Block Thickness
				A	B	C	D	
MPT4440	1/4" NPT	15,000 (1034)	.219 (5.54)	2.25 (57.15)	1.50 (38.10)	1.13 (28.70)	1.13 (28.70)	0.75 (19.05)
MPT6660	3/8" NPT	15,000 (1034)	.297 (7.54)	2.50 (63.50)	1.75 (44.45)	1.75 (44.45)	1.25 (31.75)	1.00 (25.40)
MPT8880	1/2" NPT	15,000 (1034)	.359 (9.12)	3.00 (76.20)	2.00 (50.80)	1.50 (38.10)	1.50 (38.10)	1.00 (25.40)
MPT12	3/4" NPT	10,000 (690)	.609 (14.47)	3.50 (88.90)	2.62 (66.55)	1.75 (44.45)	1.75 (44.45)	1.50 (38.10)
MPT16	1" NPT	10,000 (690)	.765 (19.43)	4.12 (104.65)	3.00 (76.20)	2.13 (54.10)	2.13 (54.10)	1.75 (44.45)

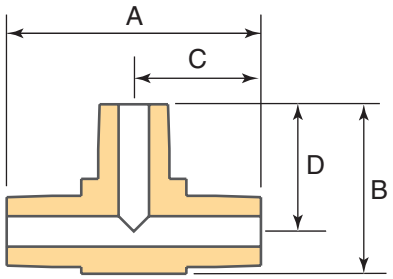

Male Pipe Tee

*Maximum pressure rating is based on the lowest rating of any component. Actual working pressure may be determined by pipe pressure rating, if lower.

All dimensions for reference only and subject to change.

For prompt service, Parker Autoclave Engineers stocks select products. Consult your local representative.

Note: NPT (Pipe) Connections: See Page 2

Conversion Adapters can be found in our "Adapter" brochure found further in this catalog or on our website.

Tel: +45 63 12 83 00 | Email: ps@hymatik.com | www.hymatik.com | Hvidkaervej 27a, DK-5250 Odense SV, Denmark

Street Pipe Tee

Catalog Number	Connection Type	Pressure Rating psi (bar)*	Orifice inches (mm)	Dimensions - inches (mm)				Block Thickness
				A	B	C	D	
SPT4440	1/4" NPT	15,000 (1034)	.219 (5.54)	2.00 (50.80)	1.38 (35.05)	0.81 (20.57)	1.00 (25.40)	0.75 (19.05)
SPT6660	3/8" NPT	15,000 (1034)	.297 (7.54)	2.50 (63.50)	1.50 (38.10)	1.00 (25.40)	1.00 (25.40)	1.00 (25.40)
SPT8880	1/2" NPT	15,000 (1034)	.359 (9.12)	3.00 (76.20)	1.75 (44.45)	1.50 (38.10)	1.25 (31.75)	1.25 (31.75)
SPT12	3/4" NPT	10,000 (690)	.609 (14.47)	3.12 (79.25)	2.62 (66.55)	1.38 (35.05)	1.31 (33.27)	1.50 (38.10)
SPT16	1" NPT	10,000 (690)	.765 (19.43)	4.12 (104.65)	3.00 (76.20)	2.13 (54.10)	2.13 (54.10)	1.75 (44.45)

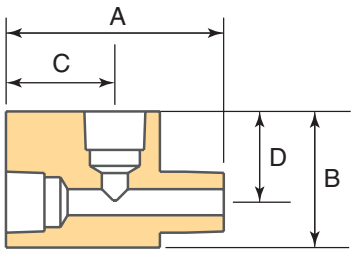

Street Pipe Tee

*Maximum pressure rating is based on the lowest rating of any component. Actual working pressure may be determined by pipe pressure rating, if lower.

All dimensions for reference only and subject to change.

For prompt service, Parker Autoclave Engineers stocks select products. Consult your local representative.

Note: NPT (Pipe) Connections: See Page 2

Conversion Adapters can be found in our "Adapter" brochure found further in this catalog or on our website.

Branch Tee

Catalog Number	Connection Type	Pressure Rating psi (bar)*	Orifice inches (mm)	Dimensions - inches (mm)				Block Thickness
				A	B	C	D	
BPT4440	1/4" NPT	15,000 (1034)	.219 (5.54)	2.00 (50.80)	1.50 (38.10)	1.00 (25.40)	1.13 (28.70)	0.75 (19.05)
BPT6660	3/8" NPT	15,000 (1034)	.297 (7.54)	2.00 (50.80)	1.75 (44.45)	1.00 (25.40)	1.25 (31.75)	1.00 (25.40)
BPT8880	1/2" NPT	15,000 (1034)	.359 (9.12)	3.00 (76.20)	2.25 (57.15)	1.50 (38.10)	1.62 (41.15)	1.25 (31.75)
BPT12	3/4" NPT	10,000 (690)	.609 (14.47)	3.00 (76.20)	2.50 (63.50)	1.50 (38.10)	1.75 (44.45)	1.38 (35.05)
BPT16	1" NPT	10,000 (690)	.765 (19.43)	4.12 (104.65)	3.00 (76.20)	2.06 (52.32)	2.13 (54.10)	1.75 (44.45)

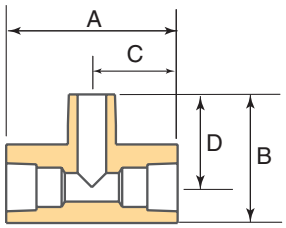

Branch Tee

*Maximum pressure rating is based on the lowest rating of any component. Actual working pressure may be determined by pipe pressure rating, if lower.

All dimensions for reference only and subject to change.

For prompt service, Parker Autoclave Engineers stocks select products. Consult your local representative.

Note: NPT (Pipe) Connections: See Page 2

Conversion Adapters can be found in our "Adapter" brochure found further in this catalog or on our website.

Pipe Hex Nipples

NPT Threaded - Pressures to 15,000 psi (1034 bar)



For rapid system make-up, Parker Autoclave Engineers supplies pipe nipples in various sizes and lengths for pipe valves and fittings.

Special Lengths:

In addition to the standard lengths listed in the table below, nipples are available in custom lengths. Consult factory.

(See “Technical Brochure” for Pressure/Temperature effect on temperatures above ambient.)

Pipe Hex Close Nipples

Catalog Number	Connection Type	Pressure Rating psi (bar)*	Orifice inches (mm)	Dimensions - inches (mm)	
				A HEX	B
15MAP4P4	1/4" NPT	15,000 (1034)	.219 (5.54)	5/8" (16)	1.81 (46)
15MAP6P6	3/8" NPT	15,000 (1034)	.297 (7.54)	3/4" (19)	1.88 (48)
15MAP8P8	1/2" NPT	15,000 (1034)	.359 (9.12)	15/16" (24)	2.50 (64)
10MAP12P12	3/4" NPT	10,000 (690)	.609 (14.47)	1-3/16" (31)	2.50 (64)
10MAP16P16	1" NPT	10,000 (690)	.765 (19.43)	1-3/8" (35)	3.19 (81)

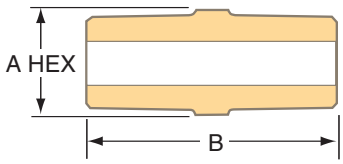

Pipe Hex Close Nipples

*Maximum pressure rating is based on the lowest rating of any component. Actual working pressure may be determined by pipe pressure rating, if lower.

All dimensions for reference only and subject to change.

For prompt service, Parker Autoclave Engineers stocks select products.
Consult your local representative.

Note: NPT (Pipe) Connections: See Page 2

Conversion Adapters can be found in our "Adapter" brochure found further in this catalog or on our website.

Tel: +45 63 12 83 00 | Email: ps@hymatik.com | www.hymatik.com | Hvidkaervej 27a, DK-5250 Odense SV, Denmark

Pipe Hex Nipples

Catalog Number	Connection Type	Pressure Rating psi (bar)*	Orifice inches (mm)	Dimensions - inches (mm)	
				A HEX	B
15MAP4P4-4	1/4" NPT	15,000 (1034)	.219 (5.54)	5/8" (16)	4.00 (102)
15MAP4P4-6	1/4" NPT	15,000 (1034)	.219 (5.54)	5/8" (16)	6.00 (153)
15MAP4P4-8	1/4" NPT	15,000 (1034)	.219 (5.54)	5/8" (16)	8.00 (203)
15MAP6P-4	3/8" NPT	15,000 (1034)	.297 (7.54)	3/4" (19)	4.00 (102)
15MAP6P6-4	3/8" NPT	15,000 (1034)	.297 (7.54)	3/4" (19)	6.00 (153)
15MAP6P6-8	3/8" NPT	15,000 (1034)	.297 (7.54)	3/4" (19)	8.00 (203)
15MAP8P8-4	1/2" NPT	15,000 (1034)	.359 (9.12)	15/16" (24)	4.00 (102)
15MAP8P8-6	1/2" NPT	15,000 (1034)	.359 (9.12)	15/16" (24)	6.00 (153)
15MAP8P8-8	1/2" NPT	15,000 (1034)	.359 (9.12)	15/16" (24)	8.00 (203)
10MAP12P12-4	3/4" NPT	10,000 (690)	.609 (14.47)	1-3/16" (31)	4.00 (102)
10MAP12P12-6	3/4" NPT	10,000 (690)	.609 (14.47)	1-3/16" (31))	6.00 (153)
10MAP12P12-8	3/4" NPT	10,000 (690)	.609 (14.47)	1-3/16" (31)	8.00 (203)
10MAP16P16-4	1" NPT	10,000 (690)	.765 (19.43)	1-3/8" (35)	4.00 (102)
10MAP16P16-6	1" NPT	10,000 (690)	.765 (19.43)	1-3/8" (35)	6.00 (152)
10MAP16P16-8	1" NPT	10,000 (690)	.765 (19.43)	1-3/8" (35)	8.00 (203)

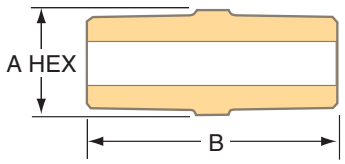

Pipe Hex Close Nipples

*Maximum pressure rating is based on the lowest rating of any component. Actual working pressure may be determined by pipe pressure rating, if lower.

All dimensions for reference only and subject to change.

For prompt service, Parker Autoclave Engineers stocks select products.
Consult your local representative.

Note: NPT (Pipe) Connections: See Page 2

Conversion Adapters can be found in our "Adapter" brochure found further in this catalog or on our website.

Pipe Hex Reducer Nipples

Catalog Number	Connection Type	Pressure Rating psi (bar)*	Orifice inches (mm)	Dimensions - inches (mm)	
				A HEX	B
15MAP4P6	1/4" to 3/8" NPT	15,000 (1034)	.203 (5.16)	3/4" (19)	1.88 (48)
15MAP4P8	1/4" to 1/2" NPT	15,000 (1034)	.203 (5.16)	15/16" (24)	2.31 (59)
15MAP6P8	3/8" to 1/2" NPT	15,000 (1034)	.300 (7.61)	15/16" (24)	2.31 (59)
10MAP6P12	3/8" to 3/4" NPT	10,000 (690)	.300 (7.61)	1-3/16" (30)	2.31 (59)
10MAP8P12	1/2" to 3/4" NPT	10,000 (690)	.359 (9.12)	1-3/16" (30)	2.50 (64)
10MAP8P16	1/2" to 1" NPT	10,000 (690)	.375 (9.53)	1-3/8" (35)	2.88 (73)
10MAP12P16	3/4" to 1" NPT	10,000 (690)	.500 (12.70)	1-3/8" (35)	2.94 (75)

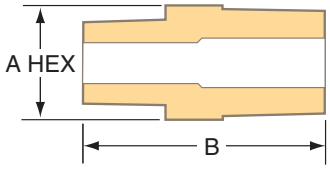

Pipe Hex Reducer Nipples

*Maximum pressure rating is based on the lowest rating of any component. Actual working pressure may be determined by pipe pressure rating, if lower.

All dimensions for reference only and subject to change.

For prompt service, Parker Autoclave Engineers stocks select products.
Consult your local representative.

Note:
NPT (Pipe) Connections: See Page 2

Conversion Adapters can be found in our "Adapter" brochure found further in this catalog or on our website.

Tel: +45 63 12 83 00 | Email: ps@hymatik.com | www.hymatik.com | Hvidkaervej 27a, DK-5250 Odense SV, Denmark

Pipe O-Ring Check Valves

NPT Threaded - Pressures to 15,000 psi (1034 bar)

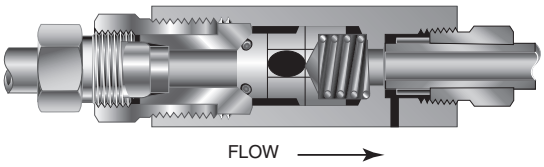

CPO Series O-Ring Check Valve

Provide unidirectional flow and tight shut-off for liquids and gases with high reliability. When differential drops below cracking pressure*, valve shuts off. (**Not for use as relief valve.**)

Cracking Pressure:

20 psi (1.38 bar) ±30%. Springs for higher cracking pressures pressures up to 100 psi available on special order for O-ring style check valves only.

Temperature Ranges:

Viton (FKM) O-ring (std.): 0° to 400°F (-18° to 204°C)
Buna-N O-ring (**-BO** suffix): -20° to 250°F (-29° to 121°C)
FFKM O-ring (**-KO** suffix): 30° to 500°F *(-18° to 260°C)
PTFE O-ring (**-TO** suffix): -100° to 400°F (-73° to 204°C)
PTFE O-ring with Low Temp Spring (**-LTTO** suffix): to -423°F (-252°C)

(See "Technical Brochure" for Pressure/Temperature effect on temperatures above ambient.)

Installation:

Vertical or Horizontal as required. Flow Direction arrow on valve body

CAUTION: While testing has shown O-Rings to provide satisfactory service life, both cyclic and shelf life may vary widely with differing service conditions, properties of reactants, pressure and temperature cycling and age of the O-ring. FREQUENT INSPECTIONS SHOULD BE MADE to detect any deterioration, and O-rings replaced as required.

NOTE: For optional material see Technical Brochure. Special material check valves are normally supplied with four flats in place of standard hex.

Material of Construction:

Item #	Description	Material
1	Check Valve Body	316 SS
2	Gland Nut	316 SS
3	Poppet	316 SS
4	Spring	302 SS
5	O-Ring	90 Duro FKM

Typical spare parts found in Repair Kits

O-Ring Check Valve Repair Kits:

Check Valves are easily repaired. Add "**R**" to front of valve catalog number for proper repair kit (example: RCPO8800)

See "Cover Torque" on page 13 for re-assembly. Include any catalog number suffix marked on original part when ordering repair kit.

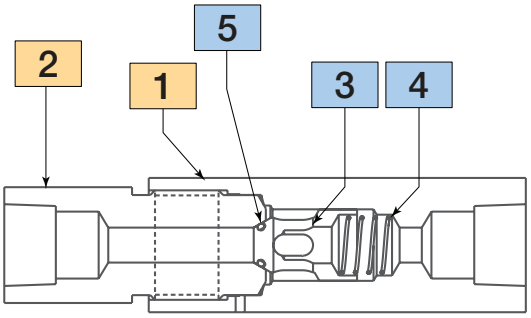

Do Not use check valve body (1) to tighten gland nut (2) into mating connection. Seal damage will occur.

Tel: +45 63 12 83 00 | Email: ps@hymatik.com | www.hymatik.com | Hvidkaervej 27a, DK-5250 Odense SV, Denmark

Pipe Ball Check Valves

NPT Threaded - Pressures to 15,000 psi (1034 bar)

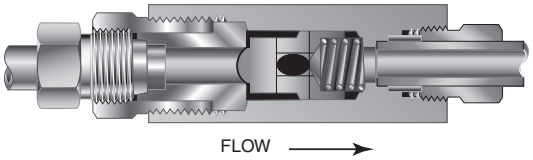

CPB Series Ball Check Valve

Prevent reverse flow **where leak-tight shut-off is not mandatory**. When differential drops below cracking pressure, valve closes. With all-metal components, valve can be used up to 800°F (425°C). See Technical Information section for connection temperature limitations. (**Not for use as relief valve.**)

Ball and poppet are an integrated, one-piece designn to assure positive, in-line seating without "chatter". Poppet is designed for axial flow with minimum pressure drop.

Cracking Pressure:

20 psi (1.38 bar) +/- 30% No optional cracking pressures available.

Temperature Range:

With All-Metal components, valve can be used to 800°F (425°C). Minimum standard operating temperature is -110°F (-79°C). For Low Temperature operation below 0° to -423°F (-18 to -252°C) use suffix "**-LT**" (Low Temp Spring)

(See "Technical Brochure" for Pressure/Temperature effect on temperatures above ambient.)

Installation:

Vertical or Horizontal as required. Flow Direction arrow on valve body

NOTE: For optional material see Technical Brochure. Special material check valves are normally supplied with four flats in place of standard hex.

Material of Construction:

Item #	Description	Material
1	Gland Nut	316 SS
2	Check Valve Body	316 SS
3	Poppet	316 SS
4	Spring	302 SS

Typical spare parts found in Repair Kits

O-Ring Check Valve Repair Kits:

Check Valves are easily repaired. Add "**R**" to front of valve catalog number for proper repair kit (example: RCPB8800)

See "Cover Torque" on page 13 for re-assembly. Include any catalog number suffix marked on original part when ordering repair kit.

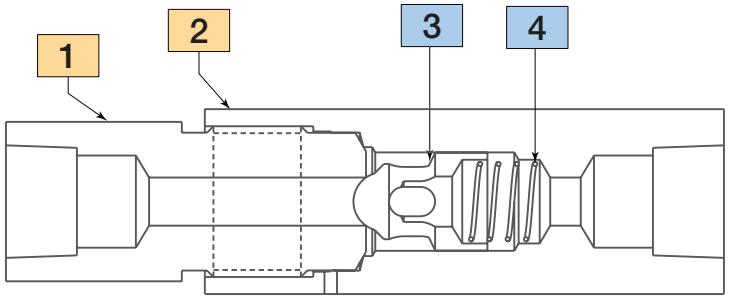

Do Not use check valve body (1) to tighten gland nut (2) into mating connection. Seal damage will occur.

Tel: +45 63 12 83 00 | Email: ps@hymatik.com | www.hymatik.com | Hvidkaervej 27a, DK-5250 Odense SV, Denmark

Pipe O-Ring Check Valves

Catalog Number	Connection Type	Pressure Rating psi (bar)*	Orifice inches (mm)	Rated Cv	Cover Torque ft. bl. (Nm)	Dimensions - inches (mm)			
						A	B	C Hex	D Hex
CPO4400	1/4" NPT	15,000 (1034)	.012 (3.05)	.28	40 (54)	3.37 (85.60)	2.38 (60.33)	0.81 (20.57)	0.81 (20.57)
CPO6600	3/8" NPT	15,000 (1034)	.22 (5.59)	.84	65 (88)	3.95 (100.33)	2.88 (73.15)	1.00 (25.40)	1.00 (25.40)
CPO8800	1/2" NPT	15,000 (1034)	.36 (9.14)	2.30	140 (190)	5.36 (136.14)	3.88 (98.55)	1.38 (35.05)	1.19 (30.23)
CPO12	3/4" NPT	10,000 (689)	.52 (13.21)	4.70	230 (312)	6.29 (159.77)	4.75 (120.65)	1.75 (44.45)	1.38 (35.05)
CPO16	1" NPT	10,000 (689)	.69 (17.53)	7.40	700 (950)	7.71 (195.83)	5.75 (146.05)	1.88+ (47.75)	1.88 (47.75)

Pipe Ball Check Valves

CPB4400	1/4" NPT	15,000 (1034)	.012 (3.05)	.28	40 (54)	3.37 (85.60)	2.38 (60.33)	0.81 (20.57)	0.81 (20.57)
CPB6600	3/8" NPT	15,000 (1034)	.22 (5.59)	.84	65 (88)	3.95 (100.33)	2.88 (73.15)	1.00 (25.40)	1.00 (25.40)
CPB8800	1/2" NPT	15,000 (1034)	.36 (9.14)	2.30	140 (190)	5.36 (136.14)	3.88 (98.55)	1.38 (35.05)	1.19 (30.23)
CPB12	3/4" NPT	10,000 (689)	.52 (13.21)	4.70	230 (312)	6.29 (159.77)	4.75 (120.65)	1.75 (44.45)	1.38 (35.05)
CPB16	1" NPT	10,000 (689)	.69 (17.53)	7.40	700 (950)	7.71 (195.83)	5.75 (146.05)	1.88+ (47.75)	1.88 (47.75)

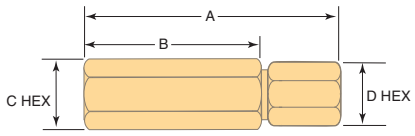

Pipe Check Valves

+ Distance across flats

All dimensions for reference only and subject to change. For prompt service, Parker Autoclave Engineers stocks select products. Consult your local representative.

Note: **NPT (Pipe) Connections:**
• NPT threads must be sealed using a high quality PTFE tape and/or paste product. Refer to thread sealant manufacturer's instructions on how to apply thread sealant.

• Sealing performance may vary based on many factors such as pressure, temperature, media, thread quality, thread material, proper thread engagement and proper use of thread sealant.

• Customer should limit the number of times an NPT fitting is assembled and disassembled because thread deformation during assembly will result in deteriorating seal quality over time. When using only PTFE tape, consider using thread lubrication to prevent galling of mating parts.

Note: Special material components are normally supplied with four flats in place of standard hex.

*Maximum pressure rating is based on the lowest rating of any component.

Tel: +45 63 12 83 00 | Email: ps@hymatik.com | www.hymatik.com | Hvidkaervej 27a, DK-5250 Odense SV, Denmark

adapters & couplings

Note: *New Adapter and Coupling Section coming soon.*

Adapters/Couplings

Parker Autoclave Engineers offers a complete line of standard adapters and couplings as well as special designs and materials.



Male/Female Adapters:
Male/female adapters are designed to join a female connection directly to another size and/or type of connection without the need for an additional coupling.

Couplings:
Couplings and reducer/adapter couplings accommodate female-to-female joining of any combination of standard size tubing listed.

Male/Male Adapters:
Male-to-male one piece adapters are designed to join two female connections of any combination listed.

QSS Male/Female Adapters:
Male/female adapters are designed to join a female connection directly to another size and/or type of connection without the need for an additional coupling.

QSS Male/Male Adapters:
Male-to-male one piece adapters are designed to join two female connections of any combination listed.

Male/Male JIC Adapters:
Male-to-male one piece adapters have one end machined with a 37° flare design.

Male/Female JIC Adapters:
Male/female adapters are designed to join a female connection directly to another size and/or type of connection without the need for an additional coupling.

EZ-Union Adapters:
O-ring face seal adapter.
Flat face style o-ring seal permits easy installation or removal of components.

Butt-Weld/Header Coupling Adapters:
Female to male adapters have one end machined for butt-welding to pipe, tubes, and headers.

Bulkhead Adapters:
Male to female adapters designed for panel mounting.

SAE O-Ring Adapters:
Female to male SAE/MS straight thread o-ring seal adapter.

For specials or other adapters not listed contact your local Sales Representative.

Parker

Autoclave Engineers®
www.autoclave.com

Adapters/Couplings - Male/Female Adapters

Male /female adapters are designed to adapt a female connection to another size and/or type of connection without the need for additional couplings. In selecting an adapter involving two different sized connections, the larger connection should be on the male end where it is possible to maximize the mechanical strength of the adapter.

To use this chart:

1. Locate MALE end in vertical column.
2. Locate desired FEMALE end of adapter across top of chart.
3. Catalog number of required adapter is located at intersection of columns.
4. For one piece adapter add-OP to suffix of part number

Other Adapters

Parker Autoclave Engineers supplies many other types of adapters on special order. These include socketweld to O.D. tube or nominal pipe size, extended or special designs.

Materials

All Parker Autoclave Engineers adapters are precision machined from cold-worked Type 316 stainless steel. Other materials available on special order.

Note: Special material couplings may be supplied with four flats in place of standard hex. Pipe connections are rated 400°F (204°C) to -423°F (-17.8°C).

					FEMALE END									
					SpeedBite				Medium Pressure					
MALE END	Connection Size and Type				1/8" W125	1/4" SW250	3/8" SW375	1/2" SW500	1/4" SF250CX	3/8" SF375CX	9/16" SF562CX	3/4" SF750CX	1" SF1000CX	1-1/2" SF1500CX
		Fits this Female Connection	Pressure Rating PSI (bar)*		15,000 (1034.20)	15,000 (1034.20)	15,000 (1034.20)	10,000 (689.45)	20,000 (1378.93)	20,000 (1378.93)	20,000 (1378.93)	20,000 (1378.93)	20,000 (1378.93)	15,000 (1034.20)
SpeedBite	1/8"	W125	15,000 (1034.20)			6M24C2	6M26C2	4M28C2	6M24C6	6M26C6	6M29C6			15M224C6
	1/4"	SW250	15,000 (1034.20)	6M42D1		6M46D2	4M48D2	6M44D6	6M46D6	6M49D6	6M412D6			
	3/8"	SW375	15,000 (1034.20)	6M62D1	6M64D2		4M68D2	6M64D6	6M66D6	6M69D6	6M612D6	6M616D6	15M624D6	
	1/2"	SW500	10,000 (689.46)	4M82D1	4M84D2	4M86D2		4M84D6	4M86D6	4M89D6	4M812D6	4M816D6		
Medium Pressure	1/4"	SF250CX	20,000 (1378.93)	15MX42K1	6MX44K2	6MX46K2	4MX48K2	20M44K6	20M46K6	20M49K6	20M412K6	20M416K6	15M424K6	
	3/8"	SF375CX	20,000 (1378.93)	15MX62K1	6MX64K2	6MX66K2	4MX68K2	20M64K6	20M66K6	20M69K6	20M612K6	20M616K6		
	9/16"	SF562CX	20,000 (1378.93)	15MX92K1	6MX94K2	6MX96K2	4MX98K2	20M94K6	20M96K6	20M99K6	20M912K6	20M916K6	15M924K6	
	3/4"	SF750CX	20,000 (1378.93)	15MX122K1	6MX124K2	6MX126K2	4MX128K2	20M124K6	20M126K6	20M129K6	20M1212K6	20M1216K6	15M1224K6	
	1"	SF1000CX	20,000 (1378.93)	15MX162K1	6MX164K2	6MX166K2	4MX168K2	20M164K6	20M166K6	20M169K6	20M1612K6	20M1616K6	15M1624K6	
	1-1/2"	SF1500CX	15,000 (1034.20)					15M244K6		15M249K6	15M2412K6	15M2416K6	15M2424K6	
High Pressure	1"	F1000C43	43,000 (2964.69)											15M1624B6
	1/4"	F250C	60,000 (4136.85)	15M42B1	6M44B2	6M46B2	4M48B2	20M44B6	20M46B6	20M49B6	20M412B6			15M4848B6
	5/16"	F312C150	150,000 (10342.14)		6M54B2	6M56B2	4M58B2	20M54B6	20M56B6	20M59B6	20M512B6			
	3/8"	F375C	60,000 (4136.85)	15M62B1	6M64B2	6M66B2	4M68B2	20M64B6	20M66B6	20M69B6	20M612B6	20M616B6		
	9/16"	F562C	60,000 (4136.85)	15M92B1	6M94B2	6M96B2	4M98B2	20M94B6	20M96B6	20M99B6	20M912B6	20M916B6		
	9/16"	F562C40	40,000 (2757.90)		6M94G2						20M912G6			
Flat Top Flat Bottom	7/16"	F437FB	10,000 (689.45)	15M72E1	6M74E2	6M76E2	4M78E2	15M74E6	15M76E6	15M79E6				
	9/16"	F562FB	10,000 (689.45)	15M92E1	6M94E2	6M96E2	4M98E2	15M94E6	15M96E6	15M99E6	15M912E6	15M916E6		
	9/16"	F562FT	10,000 (689.45)	15M92R1	6M94R2	6M96R2	4M98R2	15M94R6	15M96R6	15M99R6	15M912R6	15M916R6		
	3/4"	F750FB	10,000 (689.45)	15M122E1	6M124E2	6M126E2	4M128E2	15M124E6	15M126E6	15M129E6	15M1212E6	15M1216E6		
National Pipe Thread (NPT)	1/8"	NPT	15,000 (1034.20)	15M22N1	15M24N2	15M26N2	10M28N2	15M24N6	15M26N6	15M29N6				
	1/4"	NPT	15,000 (1034.20)	15M42N1	15M44N2	15M46N2	10M48N2	15M44N6	15M46N6	15M49N6	15M412N6	15M416N6	15M424N6	
	3/8"	NPT	15,000 (1034.20)	15M62N1	15M64N2	15M66N2	10M68N2	15M64N6	15M66N6	15M69N6	15M612N6	15M616N6		
	1/2"	NPT	15,000 (1034.20)	15M82N1	15M84N2	15M86N2	10M88N2	15M84N6	15M86N6	15M89N6	15M812N6	15M816N6	15M824N6	
	3/4"	NPT	10,000 (689.45)		10M124N2	10M126N2	10M128N2	10M124N6	10M126N6	10M129N6	10M1212N6	10M1216N6		
	1"	NPT	10,000 (689.45)			10M166N2	10M168N2		10M166N6	10M169N6	10M1612N6	10M1616N6		

Note:
All Parker Autoclave Engineers adapters are supplied complete with appropriate glands, collars, tube nuts and sleeves unless specified without.

** The maximum pressure rating for an adapter is determined by the connection component with the LOWEST pressure rating; that is, the two end connections and the tubing or pipe used, whichever is LOWER.*
CAUTION: See appropriate pressure section in reference to proper selection of tubing.

All general terms and conditions of sale, including limitations of our liability, apply to all products and services sold.

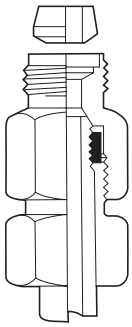

Double Cone Plug
(Medium Pressure shown)

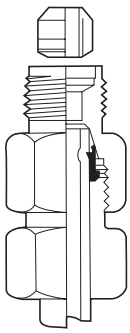

Double Cone Plug
(SpeedBite shown)

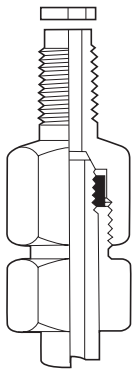

Flat Bottom Gasket
(Medium Pressure shown)

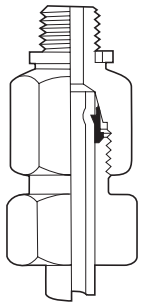

Flat Top Gasket
(SpeedBite shown)

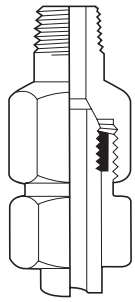

Male NPT
(High Pressure shown)

FEMALE END											
High Pressure						National Pipe Thread (NPT)					
1" F1000C43	1/4" F250C	5/16" F312C150	3/8" F375C	9/16" F562C	9/16" F562C40	1/8" NPT	1/4" NPT	3/8" NPT	1/2" NPT	3/4" NPT	1" NPT
43,000 (2964.69)	60,000 (4136.85)	150,000 (10342.14)	60,000 (4136.85)	60,000 (4136.85)	40,000 (2757.90)	15,000 (1034.20)	15,000 (1034.20)	15,000 (1034.20)	15,000 (1034.20)	10,000 (689.45)	10,000 (689.45)
	6M24C3		6M26C3	6M29C3		15M22C8	15M24C8	15M26C8	15M28C8		
	6M44D3		6M46D3	6M49D3		15M42D8	15M44D8	15M46D8	15M48D8	10M412D8	
	6M64D3		6M66D3	6M69D3		15M62D8	15M64D8	15M66D8	15M68D8	10M612D8	10M616D8
	4M84D3		4M86D3	4M89D3		10M82D8	10M84D8	10M86D8	10M88D8	10M812D8	10M816D8
	20M44K3	20M45K3	20M46K3	20M49K3		15MX42K8	15MX44K8	15MX46K8	15MX48K8	10MX412K8	
	20M64K3	20M65K3	20M66K3	20M69K3		15MX62K8	15MX64K8	15MX66K8	15MX68K8	10MX612K8	10MX616K8
	20M94K3	20M95K3	20M96K3	20M99K3		15MX92K8	15MX94K8	15MX96K8	15MX98K8	10MX912K8	10MX916K8
20M1216K3	20M124K3	20M125K3	20M126K3	20M129K3	20M129K40		15MX124K8	15MX126K8	15MX128K8	10MX1212K8	10MX1216K8
	20M164K3		20M166K3	20M169K3			15MX164K8	15MX166K8	15MX168K8	10MX1612K8	10MX1616K8
							15M244K8		15M248K8	10M2412K8	10M2416K8
	43M164B3		43M166B3	43M169B3	43M169B40						
43M416B3	60M44B3	60M45B3	60M46B3	60M49B3		15M42B8	15M44B8	15M46B8	15M48B8	10M412B8	10M416B8
	60M54B3	150M55B3-155	60M56B3	60M59B3					15M58B8	10M512B8	
43M616B3	60M64B3	60M65B3	60M66B3	60M69B3		15M62B8	15M64B8	15M66B8	15M68B8	10M612B8	10M616B8
43M916B3	60M94B3	60M95B3	60M96B3	60M99B3		15M92B8	15M94B8	15M96B8	15M98B8	10M912B8	10M916B8
									15M98G8		
	15M74E3		15M76E3	15M79E3		10M72E8	10M74E8	10M76E8	10M78E8	10M712E8	
	15M94E3		15M96E3			10M92E8	10M94E8	10M96E8	10M98E8	10M912E8	10M916E8
	15M94R3		15M96R3	15M99R3		10M92R8	10M94R8	10M96R8	10M98R8	10M912R8	10M916R8
	15M124E3		15M126E3	15M129E3		10M122E8	10M124E8	10M126E8	10M128E8	10M1212E8	10M1216E8
	15M24N3		15M26N3	15M29N3		15M22N8	15M24N8				
	15M44N3	15M45N3	15M46N3	15M49N3		15M42N8		15M46N8	15M48N8	10N412N8	
	15M64N3		15M66N3	15M69N3	15M69N40		15M64N8		15M68N8		
	15M84N3		15M86N3	15M89N3	15M89N40		15M84N8	15M86N8		10M812N8	
	10M124N3		10M126N3	10M129N3		10M122N8	10M124N8		10M128N8		
10M1616N3			10M166N3	10M169N3					10M168N8		

Parker Autoclave Engineers Male/Female Adapters are available in a "one-piece" design. They are identical to the two piece designs in length and can be ordered by adding the suffix - OP to the two piece adapter part numbers listed.

For prompt service, Parker Autoclave Engineers stocks select products. Consult factory.

All general terms and conditions of sale, including limitations of our liability, apply to all products and services sold.

Tel: +45 63 12 83 00 | Email: ps@hymatik.com | www.hymatik.com | Hvidkaervej 27a, DK-5250 Odense SV, Denmark

Adapters/Couplings - Male/Female Adapters

Speed Bite

Male End Fits this Connection	Female End	Catalog Number	Dimension inches (mm)	
			A Hex	B
W125	W125			
W125	SW250	6M24C2	0.63 (15.9)	1.29 (32.1)
W125	SW375	6M26C2	0.75 (19.1)	1.41 (35.8)
W125	SW500	4M28C2	1.00 (25.4)	1.53 (38.8)
W125	SF250CX	6M24C6	0.63 (15.9)	1.41 (35.8)
W125	SF375CX	6M26C6	0.75 (19.1)	1.41 (35.8)
W125	SF562CX	6M29C6	1.00 (25.4)	1.66 (42.1)
W125	SF750CX			
W125	SF1000CX			
W125	SF1500CX	15M224C6	2.25 (57.15)	3.41 (86.54)
W125	F1000C43			
W125	F250C	6M24C3	0.75 (19.1)	1.16 (29.5)
W125	F312C150			
W125	F375C	6M26C3	1.00 (25.4)	1.34 (34.1)
W125	F562C	6M29C3	1.38 (35.1)	1.59 (40.5)
W125	F562C40			
W125	1/8 NPT	15M22C8	0.63 (15.9)	1.25 (31.8)
W125	1/4 NPT	15M24C8	0.75 (19.1)	1.47 (37.3)
W125	3/8 NPT	15M26C8	1.00 (25.4)	1.53 (38.8)
W125	1/2 NPT	15M28C8	1.18 (30.1)	1.81 (46.0)
W125	3/4 NPT			
W125	1 NPT			
SW250	W125	6M42D1	0.63 (15.9)	1.08 (27.4)
SW250	SW250			
SW250	SW375	6M46D2	0.75 (19.1)	1.64 (41.7)
SW250	SW500	4M48D2	1.00 (25.4)	1.77 (44.9)
SW250	SF250CX	6M44D6	0.63 (15.9)	1.52 (38.5)
SW250	SF375CX	6M46D6	0.75 (19.1)	1.77 (44.9)
SW250	SF562CX	6M49D6	1.00 (25.4)	1.89 (48.0)
SW250	SF750CX	6M412D6	1.38 (35.1)	2.27 (57.7)
SW250	SF1000CX			
SW250	F1000C43			
SW250	F250C	6M44D3	.75 (19.1)	1.27 (32.2)
SW250	F312C150			
SW250	F375C	6M46D3	1.00 (25.4)	1.70 (43.3)
SW250	F562C	6M49D3	1.38 (35.1)	1.77 (44.9)
SW250	F562C40			
SW250	1/8 NPT	15M42D8	0.63 (15.9)	1.39 (35.3)
SW250	1/4 NPT	15M44D8	0.75 (19.1)	1.64 (41.7)
SW250	3/8 NPT	15M46D8	1.00 (25.4)	1.70 (43.3)
SW250	1/2 NPT	15M48D8	1.18 (30.1)	1.95 (49.6)
SW250	3/4 NPT	10M412D8	1.38 (35.1)	2.21 (56.0)
SW250	1 NPT			

Male End Fits this Connection	Female End	Catalog Number	Dimension inches (mm)	
			A Hex	B
SW375	W125	6M62D1	0.75 (19.1)	1.16 (29.4)
SW375	SW250	6M64D2	0.75 (19.1)	1.41 (35.7)
SW375	SW375			
SW375	SW500	4M68D2	1.00 (25.4)	1.78 (45.3)
SW375	SF250CX	6M64D6	0.75 (19.1)	1.41 (35.9)
SW375	SF375CX	6M66D6	0.75 (19.1)	1.59 (40.4)
SW375	SF562CX	6M69D6	1.00 (25.4)	1.72 (43.7)
SW375	SF750CX	6M612D6	1.38 (35.1)	2.28 (57.9)
SW375	SF1000CX	6M616D6	1.75 (44.5)	2.78 (70.7)
SW375	SF1500CX	15M624D6	2.25 (57.15)	3.53 (89.71)
SW375	F1000C43			
SW375	F250C	6M64D3	0.75 (19.1)	1.41 (35.7)
SW375	F312C150			
SW375	F375C	6M66D3	1.00 (25.4)	1.66 (42.2)
SW375	F562C	6M69D3	1.38 (35.1)	1.78 (45.3)
SW375	F562C40			
SW375	1/8 NPT	15M62D8	0.75 (19.1)	1.41 (35.7)
SW375	1/4 NPT	15M64D8	0.75 (19.1)	1.66 (42.2)
SW375	3/8 NPT	15M66D8	1.00 (25.4)	1.78 (45.3)
SW375	1/2 NPT	15M68D8	1.18 (30.1)	1.97 (50.0)
SW375	3/4 NPT	10M612D8	1.38 (35.1)	2.28 (57.9)
SW375	1 NPT	10M616D8	1.75 (44.5)	2.78 (70.7)
SW500	W125	4M82D1	0.94 (23.8)	1.22 (31.0)
SW500	SW250	4M84D2	0.94 (23.8)	1.34 (34.1)
SW500	SW375	4M86D2	0.94 (23.8)	1.47 (37.3)
SW500	SW500			
SW500	SF250CX	4M84D6	1.00 (25.4)	1.59 (40.5)
SW500	SF375CX	4M86D6	1.00 (25.4)	1.59 (40.5)
SW500	SF562CX	4M89D6	1.00 (25.4)	1.66 (42.2)
SW500	SF750CX	4M812D6	1.38 (35.1)	2.09 (53.2)
SW500	SF1000CX	4M816D6	1.75 (44.5)	2.72 (69.0)
SW500	F1000C43			
SW500	F250C	4M84D3	0.94 (23.8)	1.41 (35.7)
SW500	F312C150			
SW500	F375C	4M86D3	1.00 (25.4)	1.59 (40.5)
SW500	F562C	4M89D3	1.38 (35.1)	1.72 (43.7)
SW500	F562C40			
SW500	1/8 NPT	10M82D8	1.00 (25.4)	1.34 (34.1)
SW500	1/4 NPT	10M84D8	1.00 (25.4)	1.47 (37.3)
SW500	3/8 NPT	10M86D8	1.00 (25.4)	1.72 (43.7)
SW500	1/2 NPT	10M88D8	1.18 (30.1)	2.16 (54.7)
SW500	3/4 NPT	10M812D8	1.38 (35.1)	2.22 (56.3)
SW500	1 NPT	10M816D8	1.75 (44.5)	2.47 (62.7)

Maximum pressure rating is based on the lowest rating of any component. Actual working pressure may be determined by tubing pressure rating, if lower.

Note: For pressure rating see selection chart.

All Dimensions for reference only and subject to change.

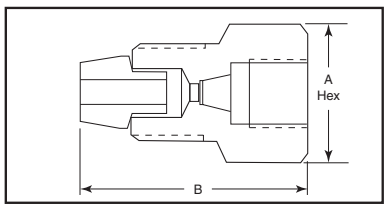

For prompt service, Parker Autoclaves Engineers stocks select products. Consult factory.

All general terms and conditions of sale, including limitations of our liability, apply to all products and services sold.

Medium Pressure

Male End Fits this Connection	Female End	Catalog Number	Dimension inches (mm)	
			A Hex	B
SF250CX	W125	15MX42K1	0.63 (15.9)	1.34 (34.1)
SF250CX	SW250	6MX44K2	0.63 (15.9)	1.59 (40.5)
SF250CX	SW375	6MX46K2	0.75 (19.1)	1.59 (40.5)
SF250CX	SW500	4MX48K2	1.00 (25.4)	1.00 (25.4)
SF250CX	SF250CX	20M44K6	0.63 (15.9)	1.47 (37.3)
SF250CX	SF375CX	20M46K6	0.75 (19.1)	1.59 (40.5)
SF250CX	SF562CX	20M49K6	1.00 (25.4)	1.97 (50.0)
SF250CX	SF750CX	20M412K6	1.38 (35.1)	2.34 (59.5)
SF250CX	SF1000CX	20M416K6	1.75 (44.5)	2.84 (72.2)
SF250CX	SF1000CX	20M416K6	1.75 (44.5)	2.84 (72.2)
SF250CX	SF1500CX	15M424K6	2.25 (57.2)	3.47 (88.1)
SF250CX	F250C	20M44K3	0.75 (19.1)	1.28 (32.5)
SF250CX	F312C150	20M45K3	1.00 (25.4)	2.09 (53.2)
SF250CX	F375C	20M46K3	1.00 (25.4)	1.59 (40.5)
SF250CX	F562C	20M49K3	1.38 (35.1)	1.97 (50.0)
SF250CX	F562C40			
SF250CX	1/8 NPT	15MX42K8	0.63 (15.9)	1.47(37.3)
SF250CX	1/4 NPT	15MX44K8	0.75 (19.1)	1.59 (40.5)
SF250CX	3/8 NPT	15MX46K8	1.00 (25.4)	1.66 (42.2)
SF250CX	1/2 NPT	15MX48K8	1.18 (30.1)	1.97 (50.0)
SF250CX	3/4 NPT	10MX412K8	1.38 (35.1)	2.09 (53.2)
SF250CX	1 NPT			
SF375CX	W125	15MX62K1	0.63 (15.9)	1.50 (38.1)
SF375CX	SW250	6MX64K2	0.63 (15.9)	1.63 (41.3)
SF375CX	SW375	6MX66K2	1.00 (25.4)	1.82 (46.0)
SF375CX	SW500	4MX68K2	1.00 (25.4)	2.00 (50.8)
SF375CX	SF250CX	20M64K6	0.63 (15.9)	1.39 (35.2)
SF375CX	SF375CX	20M66K6	.75 (19.1)	1.66 (42.2)
SF375CX	SF562CX	20M69K6	1.00 (25.4)	2.06 (52.4)
SF375CX	SF750CX	20M612K6	1.38 (35.1)	2.50 (63.5)
SF375CX	SF1000CX	20M616K6	1.75 (44.5)	3.06 (77.8)
SF375CX	F1000C43			
SF375CX	F250C	20M64K3	0.75 (19.1)	1.44 (36.5)
SF375CX	F312C150	20M65K3	1.00 (25.4)	2.25 (57.2)
SF375CX	F375C	20M66K3	1.00 (25.4)	1.63 (41.3)
SF375CX	F562C	20M69K3	1.38 (35.1)	1.88 (47.6)
SF375CX	F562C40			
SF375CX	1/8 NPT	15MX62K8	0.63 (15.9)	1.75 (44.5)
SF375CX	1/4 NPT	15MX64K8	0.75 (19.1)	1.81 (46.0)
SF375CX	3/8 NPT	15MX66K8	1.00 (25.4)	1.88 (47.6)
SF375CX	1/2 NPT	15MX68K8	1.18 (30.1)	2.12 (54.0)
SF375CX	3/4 NPT	10MX612K8	1.38 (35.1)	2.38 (60.3)
SF375CX	1 NPT	10MX616K8	1.75 (44.5)	2.63 (66.7)

Male End Fits this Connection	Female End	Catalog Number	Dimension inches (mm)	
			A Hex	B
SF562CX	W125	15MX92K1	0.81 (20.6)	1.75 (44.5)
SF562CX	SW250	6MX94K2	0.94 (23.8)	1.75 (44.5)
SF562CX	SW375	6MX96K2	0.94 (23.8)	1.75 (44.5)
SF562CX	SW500	4MX98K2	1.00 (25.4)	1.94 (49.2)
SF562CX	SF250CX	20M94K6	0.94 (23.8)	1.34 (34.1)
SF562CX	SF375CX	20M96K6	0.94 (23.8)	1.34 (59.5)
SF562CX	SF562CX	20M99K6	1.00 (25.4)	2.00 (50.8)
SF562CX	SF750CX	20M912K6	1.38 (35.1)	3.12 (79.3)
SF562CX	SF1000CX	20M916K6	1.75 (44.5)	3.75 (95.3)
SF562CX	SF1500CX	15M924K6	2.25 (57.2)	4.13 (104.9)
SF562CX	F1000C43			
SF562CX	F250C	20M94K3	0.81 (20.6)	1.81 (46.0)
SF562CX	F312C150	20M95K3	1.00 (25.4)	2.50 (63.5)
SF562CX	F375C	20M96K3	1.00 (25.4)	2.00 (50.8)
SF562CX	F562C	20M99K3	1.38 (35.1)	2.12 (54.0)
SF562CX	F562C40			
SF562CX	1/8 NPT	15MX92K8	0.94 (23.8)	1.75 (44.5)
SF562CX	1/4 NPT	15MX94K8	0.94 (23.8)	2.18 (55.5)
SF562CX	3/8 NPT	15MX96K8	0.94 (23.8)	2.18 (55.5)
SF562CX	1/2 NPT	15MX98K8	1.18 (30.1)	2.44 (61.9)
SF562CX	3/4 NPT	10MX912K8	1.50 (38.1)	2.50 (63.5)
SF562CX	1 NPT	10MX916K8	1.75 (44.5)	3.00 (76.2)
SF750CX	W125			
SF750CX	SW250	6MX124K2	1.18 (30.1)	2.06 (52.4)
SF750CX	SW375	6MX126K2	1.18 (30.1)	1.97 (50.0)
SF750CX	SW500	4MX128K2	1.18 (30.1)	2.32 (58.7)
SF750CX	SF250CX	20M124K6	1.18 (30.1)	2.06 (52.4)
SF750CX	SF375CX	20M126K6	1.18 (30.1)	2.06 (52.4)
SF750CX	SF562CX	20M129K6	1.18 (30.1)	1.69 (61.9)
SF750CX	SF750CX	20M1212K6	1.38 (35.1)	2.56 (65.0)
SF750CX	SF1000CX	20M1216K6	1.38 (35.1)	3.06 (77.8)
SF750CX	SF1500CX	15M1224K6	2.25 (57.2)	3.88 (98.6)
SF750CX	F1000C43	20M1216K3	1.75 (44.5)	3.06 (77.8)
SF750CX	F250C	20M124K3	1.18 (30.1)	2.06 (52.3)
SF750CX	F312C150	20M125K3	1.18 (30.1)	3.12 (79.3)
SF750CX	F375C	20M126K3	1.18 (30.1)	2.06 (52.4)
SF750CX	F562C	20M129K3	1.38 (35.1)	2.32 (58.9)
SF750CX	F562C40	20M129K40	1.38 (35.1)	2.38 (60.4)
SF750CX	1/8 NPT			
SF750CX	1/4 NPT	15MX124K8	1.18 (30.1)	2.50 (63.5)
SF750CX	3/8 NPT	15MX126K8	1.18 (30.1)	2.88 (73.0)
SF750CX	1/2 NPT	15MX128K8	1.18 (30.1)	2.88 (73.0)
SF750CX	3/4 NPT	10MX1212K8	1.38 (35.1)	3.12 (79.3)
SF750CX	1 NPT	10MX1216K8	1.75 (44.5)	3.50 (88.9)

Maximum pressure rating is based on the lowest rating of any component. Actual working pressure may be determined by tubing pressure rating, if lower.

Note: For pressure rating see selection chart.

All Dimensions for reference only and subject to change.

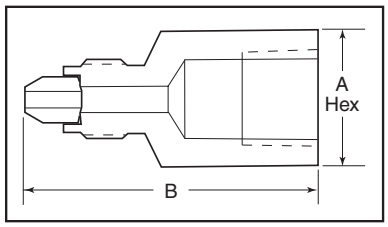

Adapter configurations may vary from outline shown

For prompt service, Parker Autoclave Engineers stocks select products. Consult factory.

All general terms and conditions of sale, including limitations of our liability, apply to all products and services sold.

Tel: +45 63 12 83 00 | Email: ps@hymatik.com | www.hymatik.com | Hvidkaervej 27a, DK-5250 Odense SV, Denmark

Male End Fits this Connection	Female End	Catalog Number	Dimension inches (mm)	
			A Hex	B
SF1000CX	W125	6MX162K2	1.38 (35.1)	2.69 (68.3)
SF1000CX	SW250	6MX164K2	1.38 (35.1)	2.63 (66.7)
SF1000CX	SW375	6MX166K2	1.38 (35.1)	2.63 (66.7)
SF1000CX	SW500	4MX168K2	1.18 (30.1)	2.69 (68.25)
SF1000CX	SF250CX	20M164K6	1.38 (35.1)	2.63 (66.7)
SF1000CX	SF375CX	20M166K6	1.38 (35.1)	2.63 (66.7)
SF1000CX	SF562CX	20M169K6	1.38 (35.1)	2.63 (66.7)
SF1000CX	SF750CX	20M1612K6	1.50 (38.1)	2.12 (54.0)
SF1000CX	SF1000CX			
SF1000CX	SF1500CX	15M1624K6	2.25 (57.2)	4.13 (105.)
SF1000CX	F1000C43			
SF1000CX	F250C	20M164K3	1.38 (35.1)	2.18 (55.6)
SF1000CX	F312C150			
SF1000CX	F375C	20M166K3	1.38 (35.1)	2.18 (55.6)
SF1000CX	F562C	20M169K3	1.50 (38.1)	2.44 (61.9)
SF1000CX	F562C40			
SF1000CX	1/8 NPT			
SF1000CX	1/4 NPT	15MX164K8	1.50 (38.1)	3.18 (81.0)
SF1000CX	3/8 NPT	15MX166K8	1.75 (44.5)	3.18 (81.0)
SF1000CX	1/2 NPT	15MX168K8	1.75 (44.5)	3.18 (81.0)
SF1000CX	3/4 NPT	10MX1612K8	1.75 (44.5)	3.18 (81.0)
SF1000CX	1 NPT	10MX1616K8	1.75 (44.5)	3.18 (81.0)

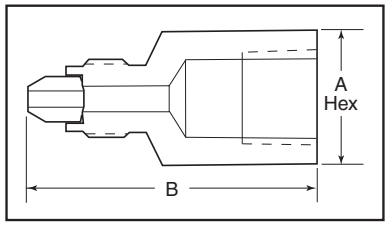

Adapter configurations may vary from outline shown

Male End Fits this Connection	Female End	Catalog Number	Dimension inches (mm)	
			A Hex	B
SF1500CX	SF250CX	15M244K6	1.88 (47.75)	3.31 (84.12)
SF1500CX	SF562CX	15M249K6	1.88 (47.75)	3.31 (84.12)
SF1500CX	SF750CX	15M2412K6	1.88 (47.75)	3.81 (96.82)
SF1500CX	SF1000CX	15M2416K6	1.88 (47.75)	4.06 (103.17)
SF1500CX	SF1500CX	15M2424K6	2.50 (63.5)	4.44 (112.8)
SF1500CX	1/4 NPT	15M244K8	1.75 (44.5)	3.56 (90.43)
SF1500CX	1/2 NPT	15M248K8	1.75 (44.5)	3.56 (90.43)
SF1500CX*	3/4 NPT	10M2412K8	1.75 (44.5)	4.06 (103.1)
SF1500CX*	1" NPT	10M2416K8	1.75 (44.5)	4.06 (103.1)

*Note: O.D. is 2.13 (54.10) supplied with flats.

High Pressure

Male End Fits this Connection	Female End	Catalog Number	Dimension inches (mm)	
			A Hex	B
F1000C43	W125			
F1000C43	SW250			
F1000C43	SW375			
F1000C43	SW500			
F1000C43	SF250CX			
F1000C43	SF375CX			
F1000C43	SF562CX			
F1000C43	SF750CX			
F1000C43	SF1000CX			
F1000C43	SF1500CX	15M1624B6	2.25 (57.2)	4.44 (112.7)
F1000C43	F1000C43			
F1000C43	F250C	43M164B3	1.38 (35.1)	2.31 (58.7)
F1000C43	F312C150			
F1000C43	F375C	43M166B3	1.38 (35.1)	2.31 (58.7)
F1000C43	F562C	43M169B3	1.50 (38.1)	2.56 (65.1)
F1000C43	F562C40	43M169B40	1.50 (38.1)	2.56 (65.1)
F1000C43	1/8 NPT			
F1000C43	1/4 NPT			
F1000C43	3/8 NPT			
F1000C43	1/2 NPT			
F1000C43	3/4 NPT			
F1000C43	1 NPT			

Male End Fits this Connection	Female End	Catalog Number	Dimension inches (mm)	
			A Hex	B
F250C	W125	15M42B1	0.63 (15.9)	1.25 (31.7)
F250C	SW250	6M44B2	0.63 (15.9)	1.44 (36.5)
F250C	SW375	6M46B2	0.75 (19.1)	1.56 (39.7)
F250C	SW500	4M48B2	1.00 (25.4)	1.69 (42.8)
F250C	SF250CX	20M44B6	0.63 (15.9)	1.31 (33.3)
F250C	SF375CX	20M46B6	0.75 (19.1)	1.69 (42.8)
F250C	SF562CX	20M49B6	1.00 (25.4)	1.81 (46.0)
F250C	SF750CX	20M412B6	1.38 (35.1)	2.18 (55.5)
F250C	SF1000CX			
F250C	SF1500CX	15M424B6	2.25 (57.2)	3.56 (90.42)
F250C	F1000C43	43M416B3	1.75 (44.5)	3.00 (76.2)
F250C	F250C	60M44B3	0.81 (20.6)	1.38 (35.1)
F250C	F312C150	60M45B3	1.00 (25.4)	2.06 (52.4)
F250C	F375C	60M46B3	1.00 (25.4)	1.56 (39.7)
F250C	F562C	60M49B3	1.38 (35.1)	1.81 (46.0)
F250C	F562C40			
F250C	1/8 NPT	15M42B8	0.63 (15.9)	1.38 (34.9)
F250C	1/4 NPT	15M44B8	0.75 (19.1)	1.69 (42.8)
F250C	3/8 NPT	15M46B8	1.00 (25.4)	1.69 (42.8)
F250C	1/2 NPT	15M48B8	1.18 (30.1)	2.00 (50.8)
F250C	3/4 NPT	10M412B8	1.38 (35.1)	2.18 (55.5)
F250C	1 NPT	10M416B8	1.75 (44.5)	2.38 (60.3)

Maximum pressure rating is based on the lowest rating of any component. Actual working pressure may be determined by tubing pressure rating, if lower.

Note: For pressure rating see selection chart.

All Dimensions for reference only and subject to change.

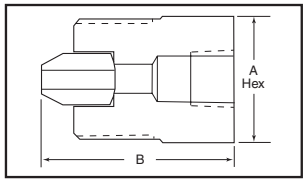

For prompt service, Parker Autoclave Engineers stocks select products. Consult factory.

Note: Adapter configurations may vary from outline shown

All general terms and conditions of sale, including limitations of our liability, apply to all products and services sold.

Male End Fits this Connection	Female End	Catalog Number	Dimension inches (mm)	
			A Hex	B
F312C150	W125			
F312C150	SW250	6M54B2	0.75 (19.1)	2.13 (54.0)
F312C150	SW375	6M56B2	0.75 (19.1)	2.25 (57.2)
F312C150	SW500	4M58B2	1.00 (25.4)	
F312C150	SF250CX	20M54B6	0.75 (19.1)	2.00 (50.8)
F312C150	SF375CX	20M56B6	0.75 (19.1)	2.25 (57.2)
F312C150	SF562CX	20M59B6	1.00 (25.4)	2.38 (60.4)
F312C150	SF750CX	20M512B6	1.38 (35.1)	3.00 (76.2)
F312C150	SF1000CX			
F312C150	F1000C43			
F312C150	F250C	60M54B3	1.00 (25.4)	2.06 (52.4)
F312C150	F312C150	150M5533-155	1.18 (29.97)	2.81 (71.37)
F312C150	F375C	60M56B3	1.00 (25.4)	2.25 (57.2)
F312C150	F562C	60M59B3	1.38 (35.1)	2.56 (65.1)
F312C150	F562C40			
F312C150	1/8 NPT			
F312C150	1/4 NPT			
F312C150	3/8 NPT			
F312C150	1/2 NPT	15M58B8	1.18 (30.1)	2.69 (68.3)
F312C150	3/4 NPT	10M512B8	1.38 (35.1)	2.88 (73.0)
F312C150	1 NPT			
F375C	W125	15M62B1	0.81 (20.6)	1.44 (36.5)
F375C	SW250	6M64B2	0.81 (20.6)	1.69 (42.8)
F375C	SW375	6M66B2	0.81 (20.6)	1.69 (42.8)
F375C	SW500	4M68B2	1.00 (25.4)	1.75 (44.5)
F375C	SF250CX	20M64B6	0.81 (20.6)	1.75 (44.5)
F375C	SF375CX	20M66B6	0.81 (20.6)	1.88 (47.6)
F375C	SF562CX	20M69B6	1.00 (25.4)	2.00 (50.8)
F375C	SF750CX	20M612B6	1.38 (35.1)	2.25 (57.2)
F375C	SF1000CX	20M616B6	1.75 (44.5)	3.25 (82.6)
F375C	F1000C43	43M616B6	1.75 (44.5)	3.25 (82.6)
F375C	F250C	60M64B3	0.81 (20.6)	1.63 (41.3)
F375C	F312C150	60M65B3	1.00 (25.4)	2.25 (57.2)
F375C	F375C	60M66B3	1.00 (25.4)	1.88 (47.63)
F375C	F562C	60M69B3	1.38 (35.1)	1.63 (41.3)
F375C	F562C40			
F375C	1/8 NPT	15M62B8	0.81 (20.6)	1.50 (38.1)
F375C	1/4 NPT	15M64B8	0.81 (20.6)	1.75 (44.5)
F375C	3/8 NPT	15M66B8	1.00 (25.4)	2.00 (50.8)
F375C	1/2 NPT	15M68B8	1.18 (30.1)	2.25 (57.2)
F375C	3/4 NPT	10M612B8	1.38 (35.1)	2.50 (63.5)
F375C	1 NPT	10M616B8	1.75 (44.5)	2.75 (69.9)

Male End Fits this Connection	Female End	Catalog Number	Dimension inches (mm)	
			A Hex	B
F562C	W125	15M92B1	1.18 (30.1)	1.50 (38.1)
F562C	SW250	6M94B2	1.18 (30.1)	1.69 (42.8)
F562C	SW375	6M96B2	1.18 (30.1)	1.69 (42.8)
F562C	SW500	4M98B2	1.18 (30.1)	1.75 (44.5)
F562C	SF250CX	20M94B6	1.18 (30.1)	1.69 (42.8)
F562C	SF375CX	20M96B6	1.18 (30.1)	1.81 (46.0)
F562C	SF562CX	20M99B6	1.18 (30.1)	1.94 (49.2)
F562C	SF750CX	20M912B6	1.38 (35.1)	2.31 (58.7)
F562C	SF1000CX	20M916B6	1.75 (44.5)	3.31 (84.1)
F562C	F1000C43	43M916B3	1.75 (44.5)	3.31 (84.1)
F562C	F250C	60M94B3	1.18 (30.1)	1.69 (42.8)
F562C	F312C150	60M95B3	1.18 (30.1)	2.31 (58.7)
F562C	F375C	60M96B3	1.18 (30.1)	1.88 (47.6)
F562C	F562C	60M99B3	1.38 (35.1)	2.31 (58.7)
F562C	F562C40			
F562C	1/8 NPT	15M92B8	0.94 (23.8)	1.81 (46.0)
F562C	1/4 NPT	15M94B8	0.94 (23.8)	1.81 (46.0)
F562C	3/8 NPT	15M96B8	0.94 (23.8)	1.81 (46.0)
F562C	1/2 NPT	15M98B8	1.18 (30.1)	2.13 (54.0)
F562C	3/4 NPT	10M912B8	1.50 (38.1)	2.31 (58.7)
F562C	1 NPT	10M916B8	1.75 (44.5)	1.69 (42.8)
F562C40	W125			
F562C40	SW250			
F562C40	SW375			
F562C40	SW500			
F562C40	SF250CX			
F562C40	SF375CX			
F562C40	SF562CX			
F562C40	SF750CX	20M912G6	1.38 (35.1)	2.50 (63.5)
F562C40	SF1000CX			
F562C40	F1000C43			
F562C40	F250C			
F562C40	F312C150			
F562C40	F375C			
F562C40	F562C			
F562C40	F562C40			
F562C40	1/8 NPT			
F562C40	1/4 NPT			
F562C40	3/8 NPT			
F562C40	1/2 NPT	15M98G8	1.18 (30.1)	2.13 (54.0)
F562C40	3/4 NPT			
F562C40	1 NPT			

Maximum pressure rating is based on the lowest rating of any component. Actual working pressure may be determined by tubing pressure rating, if lower.

Note: For pressure rating see selection chart.

All Dimensions for reference only and subject to change.

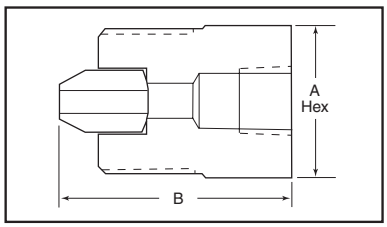

Adapter configurations may vary from outline shown

For prompt service, Parker Autoclave Engineers stocks select products. Consult factory.

All general terms and conditions of sale, including limitations of our liability, apply to all products and services sold.

Flat Bottom

Male End Fits this Connection	Female End	Catalog Number	Dimension inches (mm)	
			A Hex	B
F437FB	W125	15M72E1	0.50 (12.7)	1.41 (35.8)
F437FB	SW250	6M74E2	0.63 (15.9)	1.53 (38.9)
F437FB	SW375	6M76E2	0.75 (19.1)	1.91 (48.4)
F437FB	SW500	4M78E2	1.00 (25.4)	2.16 (54.8)
F437FB	SF250CX	15M74E6	0.63 (15.9)	1.53 (38.9)
F437FB	SF375CX	15M76E6	0.75 (19.1)	1.78 (45.2)
F437FB	SF562CX	15M79E6	1.00 (25.4)	1.91 (48.4)
F437FB	SF750CX			
F437FB	SF1000CX			
F437FB	F1000C43			
F437FB	F250C	15M74E3	0.75 (19.1)	1.53 (38.9)
F437FB	F312C150			
F437FB	F375C	15M76E3	1.00 (25.4)	1.78 (45.2)
F437FB	F562C	15M79E3	1.38 (35.1)	2.03 (51.6)
F437FB	F562C40			
F437FB	1/8 NPT	10M72E8	0.63 (15.9)	1.59 (40.4)
F437FB	1/4 NPT	10M74E8	0.75 (19.1)	1.78 (45.2)
F437FB	3/8 NPT	10M76E8	1.00 (25.4)	1.91 (48.4)
F437FB	1/2 NPT	10M78E8	1.18 (30.1)	2.16 (54.8)
F437FB	3/4 NPT			
F437FB	1 NPT			
F562FB	W125	15M92E1	0.63 (15.9)	1.44 (36.5)
F562FB	SW250	6M94E2	0.75 (19.1)	2.06 (52.4)
F562FB	SW375	6M96E2	0.75 (19.1)	2.25 (57.2)
F562FB	SW500	4M98E2	1.00 (25.4)	2.18 (55.5)
F562FB	SF250CX	15M94E6	0.63 (15.9)	1.81 (46.0)
F562FB	SF375CX	15M96E6	0.75 (19.1)	2.06 (52.4)
F562FB	SF562CX	15M99E6	1.00 (25.4)	1.18 (30.1)
F562FB	SF750CX	15M912E6	1.38 (35.1)	2.81 (71.4)
F562FB	SF1000CX			
F562FB	F1000C43			
F562FB	F250C	15M94E3	0.81 (20.6)	1.94 (49.2)
F562FB	F312C150			
F562FB	F375C	15M96E3	1.00 (25.4)	2.44 (61.9)
F562FB	F562C			
F562FB	F562C40			
F562FB	1/8 NPT	10M92E8	0.63 (15.9)	1.94 (49.2)
F562FB	1/4 NPT	10M94E8	0.75 (19.1)	2.18 (55.5)
F562FB	3/8 NPT	10M96E8	1.00 (25.4)	2.31 (58.7)
F562FB	1/2 NPT	10M98E8	1.18 (30.1)	1.63 (41.3)
F562FB	3/4 NPT	10M912E8	1.38 (35.1)	2.06 (52.4)
F562FB	1 NPT	10M916E8	1.88 (47.6)	2.25 (57.2)

Male End Fits this Connection	Female End	Catalog Number	Dimension inches (mm)	
			A Hex	B
F750FB	W125	15M122E1	0.75 (19.1)	1.69 (42.8)
F750FB	SW250	6M124E2	0.81 (20.6)	2.06 (52.4)
F750FB	SW375	6M126E2	0.75 (19.1)	1.94 (49.2)
F750FB	SW500	4M128E2	1.00 (25.4)	2.18 (55.5)
F750FB	SF250CX	15M124E6	0.81 (20.6)	1.94 (49.2)
F750FB	SF375CX	15M126E6	0.81 (20.6)	2.06 (52.4)
F750FB	SF562CX	15M129E6	1.00 (25.4)	1.31 (33.3)
F750FB	SF750CX	15M1212E6	1.38 (35.1)	1.69 (42.8)
F750FB	SF1000CX	15M1216E6	1.75 (44.5)	3.31 (84.1)
F750FB	F1000C43			
F750FB	F250C	15M124E3	1.00 (25.4)	1.94 (49.2)
F750FB	F312C150			
F750FB	F375C	15M126E3	1.00 (25.4)	2.18 (55.5)
F750FB	F562C	15M129E3	1.38 (35.1)	2.31 (58.7)
F750FB	F562C40			
F750FB	1/8 NPT	10M122E8	0.94 (23.8)	1.81 (46.0)
F750FB	1/4 NPT	10M124E8	1.00 (25.4)	2.31 (58.7)
F750FB	3/8 NPT	10M126E8	1.00 (25.4)	2.18 (55.5)
F750FB	1/2 NPT	10M128E8	1.18 (30.1)	2.69 (68.3)
F750FB	3/4 NPT	10M1212E8	1.38 (35.1)	2.69 (68.3)
F750FB	1 NPT	10M1216E8	1.88 (47.6)	3.18 (81.0)

Flat Top

F562FT	W125	15M92R1	0.75 (19.1)	0.94 (23.9)
F562FT	SW250	6M94R2	0.75 (19.1)	1.50 (38.1)
F562FT	SW375	6M96R2	0.75 (19.1)	1.50 (38.1)
F562FT	SW500	4M98R2	1.00 (25.4)	1.63 (41.3)
F562FT	SF250CX	15M94R6	0.75 (19.1)	1.25 (31.8)
F562FT	SF375CX	15M96R6	0.75 (19.1)	1.50 (38.1)
F562FT	SF562CX	15M99R6	1.00 (25.4)	1.63 (41.3)
F562FT	SF750CX			
F562FT	SF1000CX			
F562FT	F1000C43			
F562FT	F250C	15M94R3	0.75 (19.1)	1.25 (31.8)
F562FT	F312C150			
F562FT	F375C	15M96R3	1.00 (25.4)	1.50 (38.1)
F562FT	F562C	15M99R3	1.38 (35.1)	1.75 (44.5)
F562FT	F562C40			
F562FT	1/8 NPT	10M92R8	0.75 (19.1)	1.25 (31.8)
F562FT	1/4 NPT	10M94R8	0.75 (19.1)	1.44 (36.5)
F562FT	3/8 NPT	10M96R8	0.94 (23.8)	1.56 (39.7)
F562FT	1/2 NPT	10M98R8	1.18 (30.1)	2.00 (50.8)
F562FT	3/4 NPT			
F562FT	1 NPT			

Maximum pressure rating is based on the lowest rating of any component. Actual working pressure may be determined by tubing pressure rating, if lower.

Note: For pressure rating see selection chart.

All Dimensions for reference only and subject to change.

For prompt service, Parker Autoclave Engineers stocks select products. Consult factory.

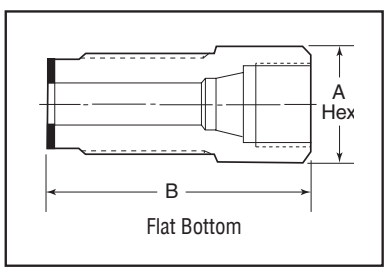

Flat Bottom

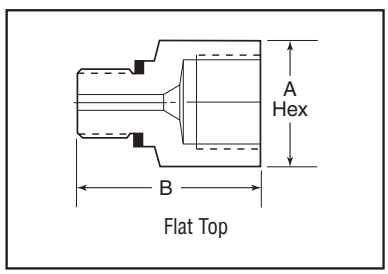

Flat Top

All general terms and conditions of sale, including limitations of our liability, apply to all products and services sold.

National Pipe Thread (NPT)

Male End Fits this Connection	Female End	Catalog Number	Dimension inches (mm)	
			A Hex	B
1/8 NPT	W125	15M22N1	0.50 (12.7)	1.00 (25.4)
1/8 NPT	SW250	15M24N2	0.63 (15.9)	1.25 (31.8)
1/8 NPT	SW375	15M26N2	0.75 (19.1)	1.44 (36.5)
1/8 NPT	SW500	10M28N2	1.00 (25.4)	1.50 (38.1)
1/8 NPT	SF250CX	15M24N6	0.63 (15.9)	1.81 (46.0)
1/8 NPT	SF375CX	15M26N6	0.75 (19.1)	1.38 (35.1)
1/8 NPT	SF562CX	15M29N6	1.00 (25.4)	1.75 (44.5)
1/8 NPT	SF750CX			
1/8 NPT	SF1000CX			
1/8 NPT	F1000C43			
1/8 NPT	F250C	15M24N3	0.75 (19.1)	1.25 (31.8)
1/8 NPT	F312C150			
1/8 NPT	F375C	15M26N3	1.00 (25.4)	1.50 (38.1)
1/8 NPT	F562C	15M29N3	1.38 (35.1)	1.63 (41.3)
1/8 NPT	F562C40			
1/8 NPT	1/8 NPT			
1/8 NPT	1/4 NPT	15M24N8	0.75 (19.1)	1.38 (35.1)
1/8 NPT	3/8 NPT			
1/8 NPT	1/2 NPT			
1/8 NPT	3/4 NPT			
1/8 NPT	1 NPT			
1/4 NPT	W125	15M42N1	0.63 (15.9)	1.13 (28.6)
1/4 NPT	SW250	15M44N2	0.63 (15.9)	1.38 (35.1)
1/4 NPT	SW375	15M46N2	0.75 (19.1)	1.50 (38.1)
1/4 NPT	SW500	10M48N2	1.00 (25.4)	1.75 (44.5)
1/4 NPT	SF250CX	15M44N6	0.63 (15.9)	1.38 (35.1)
1/4 NPT	SF375CX	15M46N6	0.75 (19.1)	1.56 (39.7)
1/4 NPT	SF562CX	15M49N6	1.00 (25.4)	1.75 (44.5)
1/4 NPT	SF750CX	15M412N6	1.38 (35.1)	2.25 (57.2)
1/4 NPT	SF1000CX	15M416N6	1.75 (44.5)	2.88 (73.0)
1/4 NPT	SF1500CX	15M424N6	2.25 (57.15)	3.48 (88.39)
1/4 NPT	F1000C43			
1/4 NPT	F250C	15M44N3	0.75 (19.1)	1.38 (35.1)
1/4 NPT	F312C150	15M45N3	1.00 (25.4)	2.50 (63.5)
1/4 NPT	F375C	15M46N3	1.00 (25.4)	1.63 (41.3)
1/4 NPT	F562C	15M49N3	1.38 (35.1)	1.75 (44.5)
1/4 NPT	F562C40			
1/4 NPT	1/8 NPT	15M42N8	0.63 (15.9)	1.38 (35.1)
1/4 NPT	1/4 NPT			
1/4 NPT	3/8 NPT	15M46N8	1.00 (25.4)	1.75 (44.5)
1/4 NPT	1/2 NPT	15M48N8	1.18 (30.1)	2.25 (57.2)
1/4 NPT	3/4 NPT	10M412N8		
1/4 NPT	3/4 NPT	10M412N8	1.38 (35.1)	2.25 (57.2)
1/4 NPT	1 NPT			

Male End Fits this Connection	Female End	Catalog Number	Dimension inches (mm)	
			A Hex	B
3/8 NPT	W125	15M62N1	0.75 (19.1)	1.13 (28.6)
3/8 NPT	SW250	15M64N2	0.75 (19.1)	1.38 (35.1)
3/8 NPT	SW375	15M66N2	0.75 (19.1)	1.50 (38.1)
3/8 NPT	SW500	10M68N2	1.00 (25.4)	1.75 (44.5)
3/8 NPT	SF250CX	15M64N6	0.75 (19.1)	1.38 (35.1)
3/8 NPT	SF375CX	15M66N6	0.75 (19.1)	1.50 (38.1)
3/8 NPT	SF562CX	15M69N6	1.00 (25.4)	1.75 (44.5)
3/8 NPT	SF750CX	15M612N6	1.38 (35.1)	2.00 (50.8)
3/8 NPT	SF1000CX	15M616N6	1.75 (44.5)	2.88 (73.0)
3/8 NPT	F1000C43			
3/8 NPT	F250C	15M64N3	0.75 (19.1)	1.38 (35.1)
3/8 NPT	F312C150			
3/8 NPT	F375C	15M66N3	1.00 (25.4)	1.63 (41.3)
3/8 NPT	F562C	15M69N3	1.38 (35.1)	1.75 (44.5)
3/8 NPT	F562C40	15M69N40	1.38 (35.1)	1.75 (44.5)
3/8 NPT	1/8 NPT			
3/8 NPT	1/4 NPT	15M64N8	0.75 (19.1)	1.63 (41.3)
3/8 NPT	3/8 NPT			
3/8 NPT	1/2 NPT	15M68N8	1.18 (30.1)	2.25 (57.2)
3/8 NPT	3/4 NPT			
3/8 NPT	1 NPT			
1/2 NPT	W125	15M82N1	1.00 (25.4)	2.50 (63.5)
1/2 NPT	SW250	15M84N2	1.00 (25.4)	1.63 (41.3)
1/2 NPT	SW375	15M86N2	1.00 (25.4)	1.63 (41.3)
1/2 NPT	SW500	10M88N2	1.00 (25.4)	1.88 (47.6)
1/2 NPT	SF250CX	15M84N6	1.00 (25.4)	1.38 (35.1)
1/2 NPT	SF375CX	15M86N6	1.00 (25.4)	1.63 (41.3)
1/2 NPT	SF562CX	15M89N6	1.00 (25.4)	1.94 (49.2)
1/2 NPT	SF750CX	15M812N6	1.38 (35.1)	2.18 (55.5)
1/2 NPT	SF1000CX	15M816N6	1.75 (44.5)	2.81 (71.4)
1/2 NPT	SF1500CX	15M824N6	2.25 (57.2)	3.62 (91.9)
1/2 NPT	F1000C43			
1/2 NPT	F250C	15M84N3	1.00 (25.4)	1.50 (38.1)
1/2 NPT	F312C150			
1/2 NPT	F375C	15M86N3	1.00 (25.4)	1.75 (44.5)
1/2 NPT	F562C	15M89N3	1.38 (35.1)	1.88 (47.6)
1/2 NPT	F562C40	15M89N40	1.38 (35.1)	1.75 (44.5)
1/2 NPT	1/8 NPT			
1/2 NPT	1/4 NPT	15M84N8	1.00 (25.4)	1.75 (44.5)
1/2 NPT	3/8 NPT	15M86N8	1.00 (25.4)	1.81 (71.4)
1/2 NPT	1/2 NPT			
1/2 NPT	3/4 NPT	10M812N8	1.38 (35.1)	2.25 (57.2)
1/2 NPT	1 NPT			

*Maximum pressure rating is based on the lowest rating of any component. Actual working pressure may be determined by tubing pressure rating, if lower.

Note: For pressure rating see selection chart.

All Dimensions for reference only and subject to change.

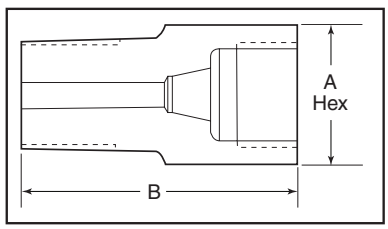

For prompt service, Parker Autoclave Engineers stocks select products. Consult factory.

All general terms and conditions of sale, including limitations of our liability, apply to all products and services sold.

National Pipe Thread (NPT)

Male End Fits this Connection	Female End	Catalog Number	Dimension inches (mm)	
			A Hex	B
3/4 NPT	W125			
3/4 NPT	SW250	10M124N2	1.18 (30.1)	1.75 (44.5)
3/4 NPT	SW375	10M126N2	1.18 (30.1)	1.75 (44.5)
3/4 NPT	SW500	10M128N2	1.18 (30.1)	1.75 (44.5)
3/4 NPT	SF250CX	10M124N6	1.18 (30.1)	1.75 (44.5)
3/4 NPT	SF375CX	10M126N6	1.18 (30.1)	1.75 (44.5)
3/4 NPT	SF562CX	10M129N6	1.38 (35.1)	2.00 (50.8)
3/4 NPT	SF750CX	10M1212N6	1.38 (35.1)	2.25 (57.2)
3/4 NPT	SF1000CX	10M1216N6	1.75 (44.5)	2.88 (73.0)
3/4 NPT	F1000C43			
3/4 NPT	F250C	10M124N3	1.18 (30.1)	1.75 (44.5)
3/4 NPT	F312C150			
3/4 NPT	F375C	10M126N3	1.18 (30.1)	2.00 (50.8)
3/4 NPT	F562C	10M129N3	1.38 (35.1)	2.13 (54.0)
3/4 NPT	F562C40			
3/4 NPT	1/8 NPT	10M122N8	1.18 (30.1)	1.63 (41.3)
3/4 NPT	1/4 NPT	10M124N8	1.18 (30.1)	1.63 (41.3)
3/4 NPT	3/8 NPT			
3/4 NPT	1/2 NPT			
3/4 NPT	3/4 NPT			
3/4 NPT	1 NPT			

Maximum pressure rating is based on the lowest rating of any component. Actual working pressure may be determined by tubing pressure rating, if lower.

Note: For pressure rating see selection chart.

All Dimensions for reference only and subject to change.

Male End Fits this Connection	Female End	Catalog Number	Dimension inches (mm)	
			A Hex	B
1 NPT	W125			
1 NPT	SW250			
1 NPT	SW375	10M166N2	1.38 (35.1)	1.75 (44.5)
1 NPT	SW500	10M168N2	1.38 (35.1)	1.75 (44.5)
1 NPT	SF250CX			
1 NPT	SF375CX	10M166N6	1.38 (35.1)	2.00 (50.8)
1 NPT	SF562CX	10M169N6	1.38 (35.1)	2.25 (57.2)
1 NPT	SF750CX	10M1612N6	1.38 (35.1)	2.63 (66.7)
1 NPT	SF1000CX	10M1616N6	1.75 (44.5)	3.06 (77.8)
1 NPT	F1000C43	15M1616N3	1.75 (44.5)	3.06 (77.8)
1 NPT	F250C			
1 NPT	F312C150			
1 NPT	F375C	10M166N3	1.38 (35.1)	2.00 (50.8)
1 NPT	F562C	10M169N3	1.38 (35.1)	2.25 (57.2)
1 NPT	F562C40			
1 NPT	1/8 NPT			
1 NPT	1/4 NPT			
1 NPT	3/8 NPT			
1 NPT	1/2 NPT	10M168N8	1.38 (35.1)	2.25 (57.2)
1 NPT	3/4 NPT			
1 NPT	1 NPT			

For prompt service, Parker Autoclave Engineers stocks select products. Consult factory.

NOTE: NPT (Pipe) connections

- NPT threads must be sealed using a high quality PTFE tape and/or PTFE paste product. Refer to thread sealant manufacturer's instructions on how to apply thread sealant.
- Sealing performance may vary based on many factors such as pressure, temperature, media, thread quality, thread material, proper thread engagement and proper use of thread sealant.
- Customer should limit the number of times an NPT fitting is assembled and disassembled because thread deformation during assembly will result in deteriorating seal quality over time. When using only PTFE tape, consider using thread lubrication to prevent galling of mating parts.

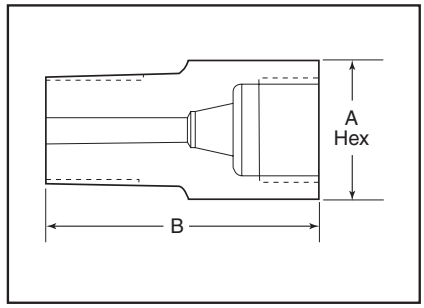

All general terms and conditions of sale, including limitations of our liability, apply to all products and services sold.

Adapters/Couplings - Couplings

The couplings shown here permit the joining of any combination of standard size tubing or tubing and standard pipe with female-to-female couplings. Other couplings available on special order.

Pressure Rating - The pressure rating of Parker Autoclave Engineers couplings is based on the lower rated connection used.

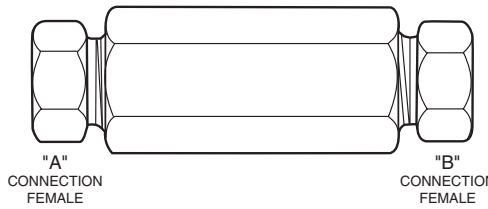

Note: Special material couplings may be supplied with four flats in place of standard hex.

How to use the Ordering Chart below:

1. Locate "A" connection in the vertical column.
2. Locate the desired "B" connection across the top of the chart.
3. The catalog number of the required coupling is located at the intersection of the two columns.

"A" Connection				"B" Connection															
				SpeedBite				Medium Pressure						High Pressure					
	Tube Outside in (mm)	Connector Type	Pressure psi (bar)*	1/8 W125	1/4 SW250	3/8 SW375	1/2** SW500	1/4 SF 250CX	3/8 SF 375CX	9/16 SF 562CX	3/4 SF 750CX	1 SF 1000CX	1-1/2 SF 1500CX	1 SF 1000C43	1/4 F 250C	3/8 F 375C	9/16 F 562C	9/16 F 562C40	9/16 F 312C150
SpeedBite	1/8 (3.18)	W125	15,000 (1034)	15F 2211	6F 2412	6F 2612	4F 2812	15F 2416	15F 2616	15F 2916		15F 21616			15F 2413	15F 2613	15F 2913		
	1/4 (6.35)	SW250	15,000 (1034)		6F 4422	6F 4622	4F 4822	6F 4426	6F 4626	4F 4926					6F 4423	6F 4623	6F 4923		
	3/8 (9.52)	SW375	15,000 (1034)			6F 6622	4F 6822	6F 6426	6F 6626	6F 6926	6F 61226	6F 61626			6F 6423	6F 6623	6F 6923		
	1/2 (12.70)	SW500	10,000 (690)				4F 8822	4F 8426	4F 8626	4F 8926	4F 81226	4F 81626			4F 8423	4F 8623	4F 8923		
Medium Pressure	1/4 (6.35)	SF250CX	20,000 (1379)					20FX 4466	20F 4666	20F 4966	20F 41266	20F 41666	15FX 42466	20F 41663	20F 4463	20F 4663	20F 4963		20F 4563
	3/8 (9.52)	SF375CX	20,000 (1379)						20FX 6666	20F 6966	20F 61266	20F 61666		20F 61663	20F 6463	20F 6663	20F 6963		20F 6563
	9/16 (14.27)	SF562CX	20,000 (1379)							20FX 9966	20F 91266	20F 91666	15FX 92466		20F 9463	20F 9663	20F 9963		20F 9563
	3/4 (19.05)	SF750CX	20,000 (1379)								20FX 12	20F 121666			20F 12463	20F 12663	20F 12963		20F 12563
	1 (25.40)	SF1000CX	20,000 (1379)									20FX 16			20F 16463	20F 16663	20F 16963		20F 16563
	1-1/2 (38.1)	SF1500CX	15,000 (1034)																
High Pressure	1 (25.40)	F1000C43	43,000 (2965)											43F 16					
	1/4 (6.35)	F250C	60,000 (4137)											43F 41633	60F 4433	60F 4633	60F 4933		60F 4533
	3/8 (9.52)	F375C	60,000 (4137)											43F 61633		60F 6633	60F 6933		60F 6533
	9/16 (14.27)	F562C	60,000 (4137)											60F 91633			60F 9933		60F 9533
	9/16 (14.27)	F562C40	60,000 (4137)															40F 9933	
	5/16 (7.92)	F312C150	150,000 (10342)																150F 5533
National Pipe Thread (NPT)	1/8 (3.18)	NPT	15,000 (1034)	15F 2281	15F 2482	15F 2682	15F 2882	15F 2486	15F 2686	15F 2986	15F 21286				15F 2483	15F 2683	15F 2983		15F 2583
	1/4 (6.35)	NPT	15,000 (1034)	15F 4281	15F 4482	15F 4682	15F 4882	15F 4486	15F 4686	15F 4986	15F 41286	15F 41686	15FX 42486		15F 4483	15F 4683	15F 4983		15F 4583
	3/8 (9.52)	NPT	15,000 (1034)	15F 6281	15F 6482	15F 6682	15F 6882	15F 6486	15F 6686	15F 6986	15F 61286	15F 61686			15F 6483	15F 6683	15F 6983		15F 6583
	1/2 (12.70)	NPT	15,000 (1034)	15F 8281	15F 8482	15F 8682	15F 8882	15F 8486	15F 8686	15F 8986	15F 81286	15F 81686			15F 8483	15F 8683	15F 8983		15F 8583
	3/4 (19.05)	NPT	10,000 (689)				10F 12882		10F 12686	10F 12986	10F 121286	10F 121686					15F 12983		
	1 (25.40)	NPT	10,000 (689)							10F 16986		10F 161686			15F 16483		15F 16983		

*Maximum pressure rating is based on the lowest rating of any component.
Actual working pressure may be determined by tubing pressure rating, if lower.
**1/2 low pressure rated to 10,000 psi.

All dimensions for reference only and subject to change.
For prompt service, Parker Autoclave Engineers stocks select products. Consult your local representative.CAUTION: See appropriate pressure section in reference to proper selection of tubing.

All general terms and conditions of sale, including limitations of our liability, apply to all products and services sold.

Coupling Dimensions - Speedbite

Connection "A"	Connection "B"	Catalog Number	Dimension inches (mm)	
			A Hex	B
W125	W125	15F2211	0.50 (12.7)	1.25 (31.7)
W125	SW250	6F2412	0.63 (15.9)	1.44 (36.6)
W125	SW375	6F2612	0.75 (19.1)	1.50 (38.1)
W125	SW500	4F2812	1.00 (25.4)	1.63 (41.4)
W125	SF250CX	15F2416	0.63 (15.9)	1.38 (35.1)
W125	SF375CX	15F2616	0.75 (19.1)	1.50 (38.1)
W125	SF562CX	15F2916	1.00 (25.4)	1.75 (44.5)
W125	SF1000CX	15F21616	1.75 (44.5)	2.75 (69.9)
W125	F250C	15F2413	0.75 (19.1)	1.25 (31.7)
W125	F375C	15F2613	1.00 (25.4)	1.50 (38.1)
W125	F562C	15F2913	1.38 (35.1)	1.75 (44.5)
SW250	SW250	6F4422	0.63 (15.9)	1.63 (41.4)
SW250	SW375	6F4622	0.75 (19.1)	1.69 (42.9)
SW250	SW500	4F4822	1.00 (25.4)	1.88 (47.8)
SW250	SF250CX	6F4426	0.63 (15.9)	1.63 (41.4)
SW250	SF375CX	6F4626	0.75 (19.1)	1.75 (44.5)
SW250	SF562CX	6F4926	1.00 (25.4)	2.00 (50.8)
SW250	SF1000CX	6F41626	1.75 (44.5)	3.00 (76.2)
SW250	F250C	6F4423	0.75 (19.1)	1.50 (38.1)
SW250	F375C	6F4623	1.00 (25.4)	1.69 (42.9)
SW250	F562C	6F4923	1.38 (35.1)	2.06 (52.3)

Connection "A"	Connection "B"	Catalog Number	Dimension inches (mm)	
			A Hex	B
SW375	SW375	6F6622	0.75 (19.1)	1.75 (44.5)
SW375	SW500	4F6822	1.00 (25.4)	1.88 (47.8)
SW375	SF250CX	6F6426	0.75 (19.1)	0.88 (22.2)
SW375	SF375CX	6F6626	0.75 (19.1)	1.75 (44.5)
SW375	SF562CX	6F6926	1.00 (25.4)	2.00 (50.8)
SW375	SF750CX	6F61226	1.38 (35.1)	2.25 (57.2)
SW375	SF1000CX	6F61626	1.75 (44.5)	3.00 (76.2)
SW375	F250C	6F6423	0.75 (19.1)	1.63 (41.4)
SW375	F375C	6F6623	1.00 (25.4)	1.81 (46.0)
SW375	F562C	6F6923	1.38 (35.1)	2.00 (50.8)
SW500	SW500	4F8822	1.00 (25.4)	2.00 (50.8)
SW500	SF250CX	4F8426	1.00 (25.4)	1.63 (41.4)
SW500	SF375CX	4F8626	1.00 (25.4)	1.88 (47.8)
SW500	SF562CX	4F8926	1.00 (25.4)	2.00 (50.8)
SW500	SF750CX	4F81226	1.38 (35.1)	2.25 (57.2)
SW500	SF1000CX	4F81626	1.75 (44.5)	3.00 (76.2)
SW500	F250C	4F8423	1.00 (25.4)	1.69 (42.9)
SW500	F375C	4F8623	1.00 (25.4)	1.88 (47.8)
SW500	F562C	4F8923	1.38 (35.1)	2.06 (52.3)

Coupling Dimensions - Medium Pressure

Connection "A"	Connection "B"	Catalog Number	Dimension inches (mm)	
			A Hex	B
SF250CX	SF250CX	20FX4466	0.63 (15.9)	1.63 (41.4)
SF250CX	SF375CX	20F4666	0.75 (19.1)	1.75 (44.5)
SF250CX	SF562CX	20F4966	1.00 (25.4)	2.00 (50.8)
SF250CX	SF750CX	20F41266	1.38 (35.1)	2.25 (57.2)
SF250CX	SF1000CX	20F41666	1.75 (44.5)	2.75 (69.9)
SF250CX	SF1500CX	15FX42466	2.25 (57.1)	3.38 (85.6)
SF250CX	F250C	20F4463	0.75 (19.1)	1.38 (35.1)
SF250CX	F375C	20F4663	1.00 (25.4)	1.63 (41.4)
SF250CX	F562C	20F4963	1.38 (35.1)	1.88 (47.8)
SF250CX	F312C150	20F4563	1.00 (25.4)	2.13 (54.1)
SF250CX	F1000C43	43F41663	1.75 (44.5)	2.75 (69.9)
SF375CX	SF375CX	20FX6666	0.75 (19.1)	1.75 (44.5)
SF375CX	SF562CX	20F6966	1.00 (25.4)	2.00 (50.8)
SF375CX	SF750CX	20F61266	1.38 (35.1)	2.25 (57.2)
SF375CX	SF1000CX	20F61666	1.75 (44.5)	2.88 (73.0)
SF375CX	F250C	20F6463	0.75 (19.1)	1.63 (41.4)
SF375CX	F375C	20F6663	1.00 (25.4)	2.00 (50.8)
SF375CX	F562C	20F6963	1.38 (35.1)	2.00 (50.8)
SF375CX	F312C150C	20F6563	1.00 (25.4)	2.25 (57.2)
SF375CX	F1000C43	43F61663	1.75 (44.5)	2.88 (73.0
SF562CX	SF562CX	20FX9966	1.00 (25.4)	2.13 (54.1)
SF562CX	SF750CX	20F91266	1.38 (35.1)	2.50 (63.5)
SF562CX	SF1000CX	20F91666	1.75 (44.5)	3.00 (76.2)
SF562CX	SF1500CX	15FX92466	2.25 (57.1)	3.75 (85.6)
SF562CX	F250C	20F9463	1.00 (25.4)	2.00 (50.8)
SF562CX	F375C	20F9663	1.00 (25.4)	2.00 (50.8)
SF562CX	F562C	20F9963	1.38 (35.1)	2.25 (57.2)
SF562CX	F312C150C	20F9563	1.00 (25.4)	2.50 (63.5)

Connection "A"	Connection "B"	Catalog Number	Dimension inches (mm)	
			A Hex	B
SF750CX	SF750CX	20FX12	1.38 (35.1)	2.50 (63.5)
SF750CX	SF1000CX	20F121666	1.75 (44.5)	3.00 (76.2)
SF750CX	F250C	20F12463	1.38 (35.1)	2.50 (63.5)
SF750CX	F375C	20F12663	1.38 (35.1)	2.38 (60.33)
SF750CX	F562C	20F12963	1.38 (35.1)	2.75 (69.9)
SF750CX	F312C150	20F12563	1.38 (35.1)	2.75 (69.9)
SF1000CX	SF1000CX	20FX16	1.75 (44.5)	3.50 (88.9)
SF1000CX	F250C	20F16463	1.75 (44.5)	2.75 (69.9)
SF1000CX	F375C	20F16663	1.75 (44.5)	2.88 (73.0)
SF1000CX	F562C	20F16963	1.75 (44.5)	3.25 (82.6)
SF1000CX	F312C150	20F16563	1.75 (44.5)	3.25 (82.6)

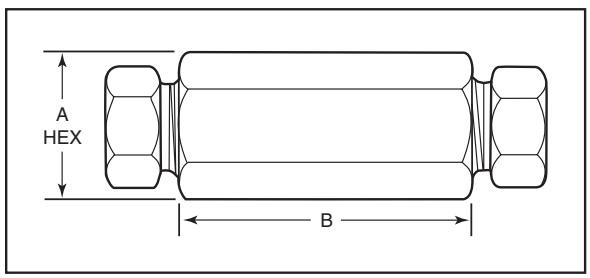

Maximum pressure rating is based on the lowest rating of any component.
Actual working pressure may be determined by tubing pressure rating, if lower.
Note: For pressure rating see selection chart.

All dimensions for reference only and subject to change.
For prompt service, Parker Autoclave Engineers stocks select products.
Consult your local representative.

All general terms and conditions of sale, including limitations of our liability, apply to all products and services sold.

Coupling Dimensions - High Pressure

Connection "A"	Connection "B"	Catalog Number	Dimension inches (mm)	
			A Hex	B
F250C	F250C	60F4433	0.75 (19.1)	1.38 (35.1)
F250C	F375C	60F4633	1.00 (25.4)	1.63 (41.4)
F250C	F562C	60F4933	1.38 (35.1)	1.75 (44.5)
F250C	F312C150	60F4533	1.00 (25.4)	2.00 (50.8)
F250C	F1000C43	43F41633	1.75 (44.5)	2.75 (69.9)
F375C	F375C	60F6633	1.00 (25.4)	1.75 (44.5)
F375C	F562C	60F6933	1.38 (35.1)	2.00 (50.8)
F375C	F312C150	60F6533	1.00 (25.4)	2.25 (57.2)
F375C	F1000C43	43F61633	1.75 (44.5)	2.88 (73.0)
F562C	F562C	60F9933	1.38 (35.1)	2.19 (55.6)
F562C40	F562C40	40F9933	1.38 (35.1)	2.19 (55.6)
F562C	F312C150	60F9533	1.19 (30.1)	2.63 (66.7)
F562C	SF1000C43	43F91633	1.75 (44.5)	3.75 (82.6)
F312C150	F312C150	150F5533	1.38 (35.1)	2.50 (63.5)
F1000C43	F1000C43	43F16	1.75 (44.5)	3.50 (88.9)

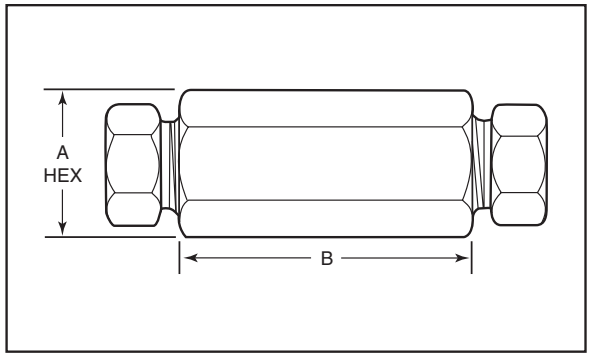

Coupling Dimensions - National Pipe Thread (NPT)

Connection "A"	Connection "B"	Catalog Number	Dimension inches (mm)	
			A Hex	B
1/8 NPT	W125	15F2281	0.63 (15.9)	1.38 (35.1)
1/8 NPT	SW250	15F2482	0.63 (15.9)	1.50 (38.1)
1/8 NPT	SW375	15F2682	0.75 (19.1)	1.63 (41.4)
1/8 NPT	SW500	10F2882	1.00 (25.4)	1.50 (38.1)
1/8 NPT	SF250CX	15F2486	0.63 (15.9)	1.38 (35.1)
1/8 NPT	SF375CX	15F2686	0.75 (19.1)	1.50 (38.1)
1/8 NPT	SF562CX	15F2986	1.00 (25.4)	1.63 (41.4)
1/8 NPT	SF750CX	15F21286	1.38 (35.1)	1.75 (44.5)
1/8 NPT	F250C	15F2483	0.75 (19.1)	1.38 (35.1)
1/8 NPT	F375C	15F2683	1.00 (25.4)	1.63 (41.4)
1/8 NPT	F562C	15F2983	1.38 (35.1)	1.82 (46.2)
1/8 NPT	F312C150	15F2583	1.00 (25.4)	2.13 (54.1)

Maximum pressure rating is based on the lowest rating of any component.
Actual working pressure may be determined by tubing pressure rating, if lower.
Note: For pressure rating see selection chart.

All dimensions for reference only and subject to change.
For prompt service, Parker Autoclave Engineers stocks select products. Consult your local representative.

Connection "A"	Connection "B"	Catalog Number	Dimension inches (mm)	
			A Hex	B
1/4 NPT	W125	15F4281	0.75 (19.1)	1.50 (38.1)
1/4 NPT	SW250	15F4482	0.75 (19.1)	1.63 (41.4)
1/4 NPT	SW375	15F4682	0.75 (19.1)	1.75 (44.5)
1/4 NPT	SW500	10F4882	1.00 (25.4)	2.00 (50.8)
1/4 NPT	SF250CX	15F4486	0.75 (19.1)	1.63 (41.4)
1/4 NPT	SF375CX	15F4686	0.75 (19.1)	1.75 (44.5)
1/4 NPT	SF562CX	15F4986	1.00 (25.4)	2.00 (50.8)
1/4 NPT	SF750CX	15F41286	1.38 (35.1)	1.75 (44.5)
1/4 NPT	SF1000CX	15F41686	1.38 (35.1)	2.38 (60.33)
1/4 NPT	SF1500CX	15F42486	2.25 (57.2)	3.25 (82.6)
1/4 NPT	F250C	15F4483	0.75 (19.1)	1.63 (41.4)
1/4 NPT	F375C	15F4683	1.00 (25.4)	1.88 (47.8)
1/4 NPT	F562C	15F4983	1.38 (35.1)	2.00 (50.8)
1/4 NPT	F312C150	15F4583	1.00 (25.4)	2.50 (63.5)

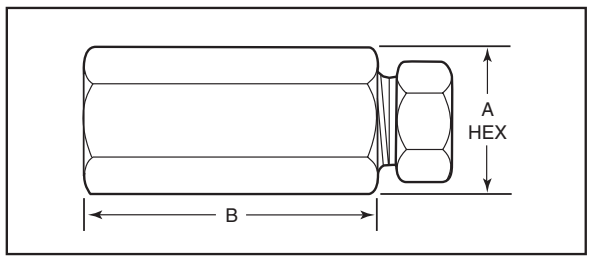

All general terms and conditions of sale, including limitations of our liability, apply to all products and services sold.

Coupling Dimensions - National Pipe Thread (NPT) - con't

Connection "A"	Connection "B"	Catalog Number	Dimension inches (mm)	
			A Hex	B
3/8 NPT	W125	15F6281	1.00 (25.4)	1.63 (41.1)
3/8 NPT	SW250	15F6482	1.00 (25.4)	1.75 (44.5)
3/8 NPT	SW375	15F6682	1.00 (25.4)	1.88 (47.8)
3/8 NPT	SW500	10F6882	1.00 (25.4)	2.00 (50.8)
3/8 NPT	SF250CX	15F6486	0.94 (23.9)	1.63 (41.4)
3/8 NPT	SF375CX	15F6686	0.94 (23.9)	1.82 (46.2)
3/8 NPT	SF562CX	15F6986	1.00 (25.4)	2.00 (50.8)
3/8 NPT	SF750CX	15F61286	1.38 (35.1)	2.38 (60.33)
3/8 NPT	SF1000CX	15F61686	1.75 (44.5)	2.50 (63.5)
3/8 NPT	F250C	15F6483	1.00 (25.4)	1.63 (41.4)
3/8 NPT	F375C	15F6683	1.00 (25.4)	1.88 (47.8)
3/8 NPT	F562C	15F6983	1.38 (35.1)	2.00 (50.8)
3/8 NPT	F312C150	15F6583	1.00 (25.4)	2.25 (57.2
1/2 NPT	W125	15F8281	1.88 (47.8)	2.00 (50.8)
1/2 NPT	SW250	15F8482	1.88 (47.8)	2.13 (54.1)
1/2 NPT	SW375	15F8682	1.88 (47.8)	2.13 (54.1)
1/2 NPT	SW500	10F8882	1.19 (30.1)	2.25 (57.2)
1/2 NPT	SF250CX	15F8486	1.19 (30.1)	2.00 (50.8)
1/2 NPT	SF375CX	15F8686	1.19 (30.1)	2.13 (54.1)
1/2 NPT	SF562CX	15F8986	1.19 (30.1)	2.25 (57.2)
1/2 NPT	SF750CX	15F81286	1.38 (35.1)	2.63 (66.7)
1/2 NPT	SF1000CX	15F81686	1.75 (44.5)	3.00 (76.2)
1/2 NPT	F250C	15F8483	1.19 (30.1)	2.00 (50.8)
1/2 NPT	F375C	15F8683	1.19 (30.1)	2.13 (54.1)
1/2 NPT	F562C	15F8983	1.38 (35.1)	2.50 (63.5)
1/2 NPT	F312C150	15F8583	1.19 (30.1)	2.50 (63.5)

Connection "A"	Connection "B"	Catalog Number	Dimension inches (mm)	
			A Hex	B
3/4 NPT	SW500	10F12882	1.38 (35.1)	2.50 (63.5)
3/4 NPT	SF375CX	10F12686	1.38 (35.1)	2.25 (57.2)
3/4 NPT	SF562CX	10F12986	1.38 (35.1)	2.25 (57.2)
3/4 NPT	SF750CX	10F121286	1.50 (38.1)	2.63 (66.7)
3/4 NPT	SF1000CX	10F121686	1.75 (44.5)	3.00 (76.2)
3/4 NPT	F250C	10F12483	1.38 (35.1)	2.38 (60.33)
3/4 NPT	F562C	10F12983	1.38 (35.1)	2.38 (60.33)
1 NPT	SF562CX	10F16986	1.75 (44.5)	2.63 (66.7)
1 NPT	SF1000CX	10F161686	1.75 (44.5)	2.88 (73.0)
1 NPT	F250C	10F16483	1.88 (47.8)	2.38 (60.33)
1 NPT	F562C	10F16983	1.75 (44.5)	2.50 (63.5)

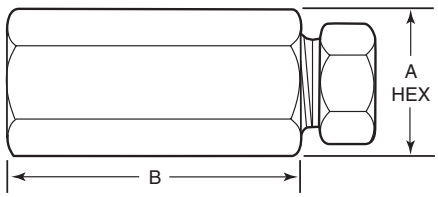

Maximum pressure rating is based on the lowest rating of any component.
Actual working pressure may be determined by tubing pressure rating, if lower.
Note: For pressure rating see selection chart.

All dimensions for reference only and subject to change.
For prompt service, Parker Autoclave Engineers stocks select products. Consult your local representative.

NOTE: NPT (Pipe) connections

- NPT threads must be sealed using a high quality PTFE tape and/or PTFE paste product. Refer to thread sealant manufacturer's instructions on how to apply thread sealant.
- Sealing performance may vary based on many factors such as pressure, temperature, media, thread quality, thread material, proper thread engagement and proper use of thread sealant.
- Customer should limit the number of times an NPT fitting is assembled and disassembled because thread deformation during assembly will result in deteriorating seal quality over time. When using only PTFE tape, consider using thread lubrication to prevent galling of mating parts.

All general terms and conditions of sale, including limitations of our liability, apply to all products and services sold.

Adapters/Couplings - Male/Male Adapters

Parker Autoclave Engineer's standard male-to-male one piece adapters are available in low, medium, and high pressure configurations. Standard male-to-male adapters are machined from cold worked stainless steel. Other materials are available upon request. Contact your local Sales Representative for optional information. The following tables list our standard adapters with dimensions.



Adapter End Configuration

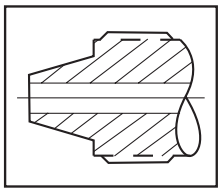

'L' Low Pressure

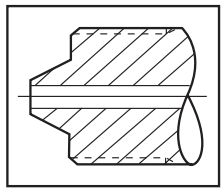

'H' High Pressure

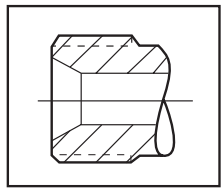

'RH' Reverse High Pressure

(Type "M" Male Adapter)

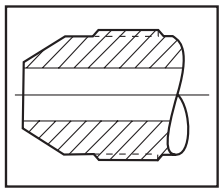

'M' Medium Pressure

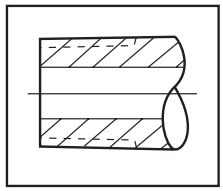

'P' National Pipe Tapered

Ordering Procedure

Typical catalog number: 20 MA M6 H9

20	MA	M6	H9
Pressure (X 1000 psi)	**Male Adapter**	**Available End Connections**	

L2 - 1/8" Low Pressure	**M4** - 1/4" Medium Pressure	**H4** - 1/4" High Pressure	**P4** - 1/4" NPT	***RH9** - 9/16" -18 Reverse High
L4 - 1/4" Low Pressure	**M6** - 3/8" Medium Pressure	**H5** - 5/16" High Pressure	**P6** - 3/8" NPT	**RH12** - 3/4" -16 Reverse High
L6 - 3/8" Low Pressure	**M9** - 9/16" Medium Pressure	**H6** - 3/8" High Pressure	**P8** - 1/2" NPT	**RH14** - 7/8" -14 Reverse High
L8 - 1/2" Low Pressure	**M12** - 3/4" Medium Pressure	**H9** - 9/16" High Pressure	**P12** - 3/4" NPT	**RH16** - 1" -12 Reverse High
	M16 - 1" Medium Pressure		**P16** - 1" NPT	**RH21** - 1-5/16" -12 Reverse High

Note: Special material one piece adapters may be supplied with four flats in place of standard hex.

*RH9 & RH14 - 40,000 psi (2758 bar), RH12 - 30,000 psi (2068 bar), RH16 - 26,000 psi (1793 bar), RH21 - 20,000 psi (1379 bar).

RH or "Reverse High Pressure" Connection is also know as "Type "M" Male Connection"

All general terms and conditions of sale, including limitations of our liability, apply to all products and services sold.

Low-Pressure to Low-Pressure Adapters

Catalog Number	Connection L/P	Connection L/P	Dimension inches (mm)	
			A Hex	B
15MAL2L2	W125	W125	0.50 (12.7)	1.38 (34.9)
15MAL2L4	W125	SW250	0.63 (15.9)	1.63 (41.3)
15MAL4L4	SW250	SW250	0.63 (15.9)	1.88 (47.6)
10MAL6L8	SW375	SW500	1.00 (25.4)	2.25 (57.1)
10MAL8L8	SW500	SW500	1.00 (25.4)	2.13 (54.0)

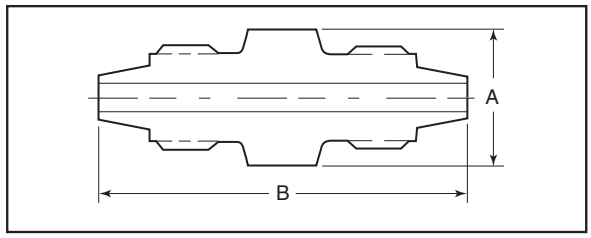

Low-Pressure to Medium-Pressure Adapters

Catalog Number	Connection L/P	Connection M/P	Dimension inches (mm)	
			A Hex	B
15MAL4M4	SW250	SF250CX	0.63 (15.9)	1.86 (47.3)
10MAL8M9	SW500	SF562CX	1.00 (25.4)	2.44 (62.0)

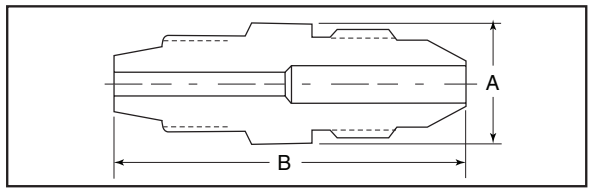

Low-Pressure to High-Pressure Adapters

Catalog Number	Connection L/P	Connection H/P	Dimension inches (mm)	
			A Hex	B
15MAL2H4	W125	F250C	0.63 (15.9)	1.63 (41.3)
15MAL2H6	W125	F375C	0.90 (25.4)	2.00 (50.8)

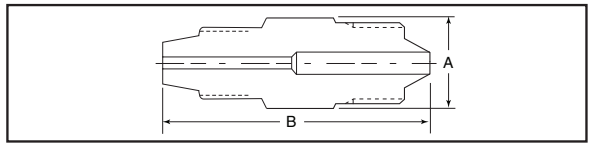

Medium-Pressure to Medium-Pressure Adapters

Catalog Number	Connection M/P	Connection M/P	Dimension inches (mm)	
			A Hex	B
20MAM4M4	SF250CX	SF250CX	0.50 (12.7)	1.69 (42.9)
20MAM4M6	SF250CX	SF375CX	0.63 (15.9)	1.88 (47.6)
20MAM4M9	SF250CX	SF562CX	0.94 (23.8)	2.38 (60.3)
20MAM4M12	SF250CX	SF750CX	1.19 (30.1)	2.69 (68.2)
20MAM4M16	SF250CX	SF1000CX	1.38 (34.9)	3.38 (85.7)
20MAM6M6	SF375CX	SF375CX	0.63 (15.9)	2.25 (57.1)
20MAM6M9	SF375CX	SF562CX	0.94 (23.8)	2.38 (60.3)
20MAM6M12	SF375CX	SF750CX	1.19 (30.1)	2.81 (71.4)
20MAM6M16	SF375CX	SF1000CX	1.38 (34.9)	3.38 (85.7)
20MAM9M9	SF562CX	SF562CX	0.94 (23.8)	2.50 (63.5)
20MAM9M12	SF562CX	SF750CX	1.19 (30.1)	3.00 (76.2)
20MAM9M16	SF562CX	SF1000CX	1.38 (34.9)	3.69 (93.72)
20MAM12M12	SF750CX	SF750CX	1.19 (30.1)	3.13 (79.3)
20MAM12M16	SF750CX	SF1000CX	1.38 (34.9)	3.81 (96.8)
20MAM16M16	SF1000CX	SF1000CX	1.38 (34.9)	4.38 (111.1)

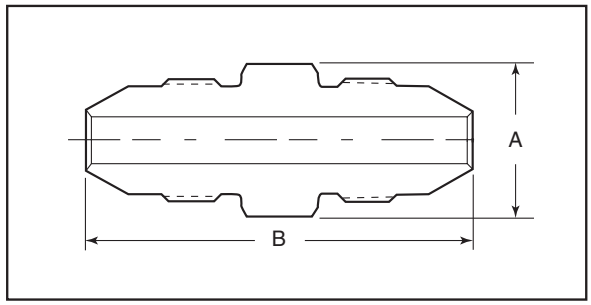

Medium-Pressure to High-Pressure Adapters

Catalog Number	Connection M/P	Connection H/P	Dimension inches (mm)	
			A Hex	B
20MAM4H4	SF250CX	F250C	0.63 (15.9)	1.75 (44.5)
20MAM4H6	SF250CX	F375C	0.81 (20.6)	2.13 (54.0)
20MAM4H9	SF250CX	F562C	1.19 (30.1)	2.63 (66.7)
20MAM6H4	SF375CX	F250C	0.63 (15.9)	1.94 (49.2)
20MAM6H6	SF375CX	F375C	0.81 (20.6)	2.38 (60.3)
20MAM6H9	SF375CX	F562C	1.19 (30.1)	2.69 (68.2)
20MAM9H4	SF562CX	F250C	0.81 (20.6)	2.25 (57.1)
20MAM9H6	SF562CX	F375C	0.81 (20.6)	2.56 (65.0)
20MAM9H9	SF562CX	F562C	1.19 (30.1)	2.94 (74.6)
20MAM12H4	SF750CX	F250C	1.19 (30.1)	2.63 (66.7)
20MAM12H6	SF750CX	F375C	1.19 (30.1)	2.88 (73.0)
20MAM12H9	SF750CX	F562C	1.19 (30.1)	3.00 (76.2)
20MAM16H4	SF1000CX	F250C	1.38 (34.9)	3.25 (82.6)
20MAM16H6	SF1000CX	F375C	1.38 (34.9)	3.50 (89.0)
20MAM16H9	SF1000CX	F562C	1.38 (34.9)	3.69 (93.6)

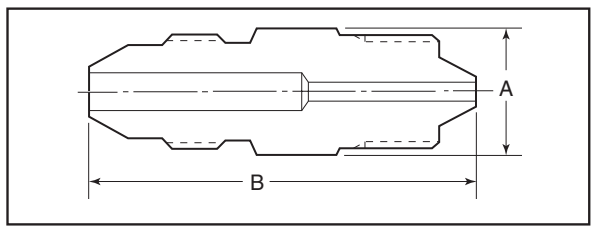

Maximum pressure rating is based on the lowest rating of any component.
Actual working pressure may be determined by tubing pressure rating, if lower.

Note: For pressure rating see ordering procedure.
All Dimensions for reference only and subject to change.

For prompt service, Parker Autoclave Engineers stocks select products. Consult factory.

All general terms and conditions of sale, including limitations of our liability, apply to all products and services sold.

High-Pressure to High-Pressure Adapters

Catalog Number	Connection H/P	Connection H/P	Dimension inches (mm)	
			A Hex	B
40MAH9H9	F562C40	F562C40	1.19 (30.1)	2.94 (74.6)
60MAH4H4	F250C	F250C	0.63 (15.9)	1.69 (42.8)
60MAH4H5	F250C	F312C150	0.75 (19.1)	2.63 (66.7)
60MAH4H6	F250C	F375C	0.81 (20.6)	2.13 (54.0)
60MAH4H9	F250C	F562C	1.19 (30.1)	2.56 (65.0)
60MAH5H6	F312C150	F375C	0.81 (20.6)	2.81 (71.4)
60MAH6H6	F375C	F375C	0.81 (20.6)	2.25 (57.1)
60MAH6H9	F375C	F562C	1.19 (30.1)	2.88 (73.0)
60MAH9H9	F562C	F562C	1.19 (30.1)	3.00 (76.2)
150MAH5H5	F312C150	F312C150	0.75 (19.1)	3.38 (85.7)

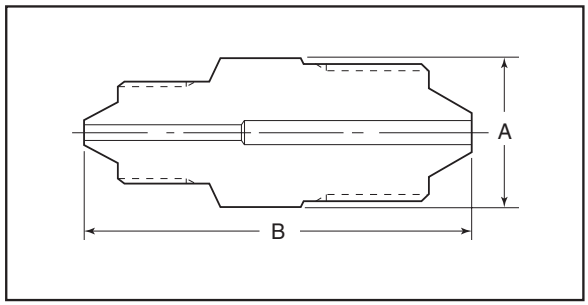

Low-Pressure to NPT Adapters

Catalog Number	Connection L/P	Connection NPT	Dimension inches (mm)	
			A Hex	B
15MAL2P2	W125	1/8"	0.50 (12.7)	1.38 (34.9)
15MAL2P4	W125	1/4"	0.63 (15.9)	1.63 (41.2)
15MAL2P8	W125	1/2"	1.00 (25.4)	2.13 (54.0)
15MAL4P8	SW250	1/2"	1.00 (25.4)	2.25 (57.1)
15MAL4P2	SW250	1/8"	0.63 (15.9)	1.63 (41.2)
15MAL4P4	SW250	1/4"	0.63 (15.9)	1.75 (44.5)
15MAL6P4	SW375	1/4"	0.75 (19.1)	1.88 (47.6)
15MAL6P8	SW375	1/2"	1.00 (25.4)	2.25 (57.1)
10MAL8P6	SW500	3/8"	1.00 (25.4)	2.00 (50.0)
10MAL8P8	SW500	1/2"	1.00 (25.4)	2.31 (58.7)
10MAL8P12	SW500	3/4"	1.19 (30.1)	2.38 (60.3)

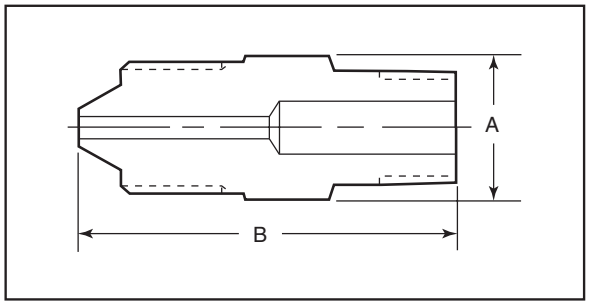

Medium-Pressure to NPT Adapters

Catalog Number	Connection M/P	Connection NPT	Dimension inches (mm)	
			A Hex	B
15MAM4P4	SF250CX	1/4"	0.63 (15.9)	1.75 (44.5)
15MAM4P6	SF250CX	3/8"	0.75 (19.1)	1.81 (46.2)
15MAM4P8	SF250CX	1/2"	0.94 (23.8)	2.19 (55.5)
15MAM6P4	SF375CX	1/4"	0.63 (15.9)	1.94 (49.1)
15MAM6P6	SF375CX	3/8"	0.75 (19.1)	2.00 (50.8)
15MAM6P8	SF375CX	1/2"	0.94 (23.8)	2.38 (60.3)
15MAM9P4	SF562CX	1/4"	0.81 (20.6)	2.25 (57.1)
15MAM9P6	SF562CX	3/8"	0.81 (20.6)	2.13 (54.0)
15MAM9P8	SF562CX	1/2"	0.94 (23.8)	2.56 (65.0)
10MAM9P12	SF562CX	3/4"	1.19 (30.1)	2.75 (69.9)
10MAM9P16	SF562CX	1"	1.38 (34.9)	3.00 (76.2)
15MAM12P4	SF750CX	1/4"	1.19 (30.1)	2.63 (66.7)
15MAM12P6	SF750CX	3/8"	1.19 (30.1)	2.63 (66.7)
15MAM12P8	SF750CX	1/2"	1.19 (30.1)	2.81 (71.4)
10MAM12P12	SF750CX	3/4"	1.19 (30.1)	2.81 (71.4)
10MAM12P16	SF750CX	1"	1.19 (30.1)	2.81 (71.4)
15MAM16P4	SF1000CX	1/4"	1.38 (34.9)	3.38 (85.7)
15MAM16P6	SF1000CX	3/8"	1.38 (34.9)	3.31 (84.1)
15MAM16P8	SF1000CX	1/2"	1.38 (34.9)	3.44 (87.3)
10MAM16P12	SF1000CX	3/4"	1.50 (38.1)	3.75 (95.3)
10MAM16P16	SF1000CX	1"	1.50 (38.1)	4.00 (101.6)

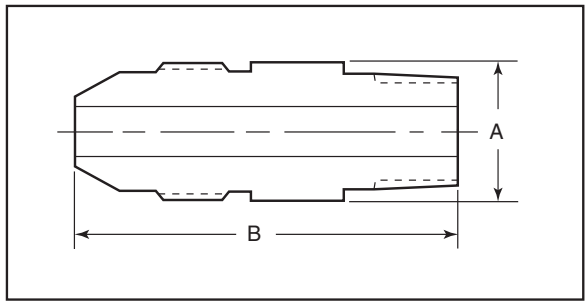

NOTE: NPT (Pipe) connections

- NPT threads must be sealed using a high quality PTFE tape and/or PTFE paste product. Refer to thread sealant manufacturer's instructions on how to apply thread sealant.
- Sealing performance may vary based on many factors such as pressure, temperature, media, thread quality, thread material, proper thread engagement and proper use of thread sealant.
- Customer should limit the number of times an NPT fitting is assembled and disassembled because thread deformation during assembly will result in deteriorating seal quality over time. When using only PTFE tape, consider using thread lubrication to prevent galling of mating parts.

Maximum pressure rating is based on the lowest rating of any component.
Actual working pressure may be determined by tubing pressure rating, if lower.
Note: For pressure rating see ordering procedure.
All Dimensions for reference only and subject to change.

For prompt service, Parker Autoclave Engineers stocks select products. Consult factory.

All general terms and conditions of sale, including limitations of our liability, apply to all products and services sold.

High-Pressure to NPT Adapters

Catalog Number	Connection H/P	Connection NPT	Dimension inches (mm)	
			A Hex	B
15MAH4P4	F250C	1/4”	0.63 (15.9)	1.81 (46.2)
15MAH4P6	F250C	3/8”	0.75 (19.1)	1.88 (47.6)
15MAH4P8	F250C	1/2”	0.94 (23.8)	2.25 (57.1)
15MAH6P4	F375C	1/4”	0.81 (20.6)	2.13 (54.0)
15MAH6P6	F375C	3/8”	0.81 (20.6)	2.13 (54.0)
15MAH6P8	F375C	1/2”	0.94 (23.8)	2.50 (63.5)
15MAH9P4	F562C	1/4”	1.19 (30.1)	2.63 (66.7)
15MAH9P6	F562C	3/8”	1.19 (30.1)	2.56 (65.0)
15MAH9P8	F562C	1/2”	1.19 (30.1)	2.75 (69.9)

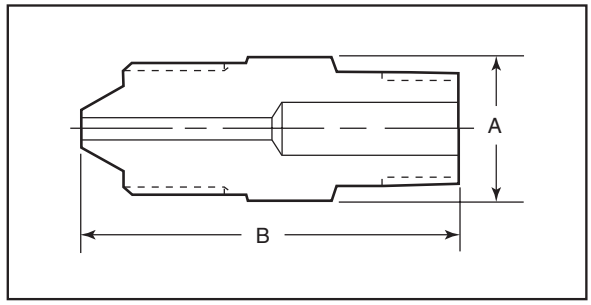

NPT to NPT Adapters

Catalog Number	Connection NPT	Connection NPT	Dimension inches (mm)	
			A Hex	B
15MAP4P4	1/4	1/4”	0.63 (15.9)	1.81 (46.2)
15MAP4P6	1/4	3/8”	0.75 (19.1)	1.88 (47.6)
15MAP4P8	1/4	1/2”	0.94 (23.8)	2.31 (58.7)
15MAP6P6	3/8	3/8”	0.75 (19.1)	1.88 (47.6)
15MAP6P8	3/8	1/2”	0.94 (23.8)	2.31 (58.7)
15MAP8P8	1/2	1/2”	0.94 (23.8)	2.50 (63.5)

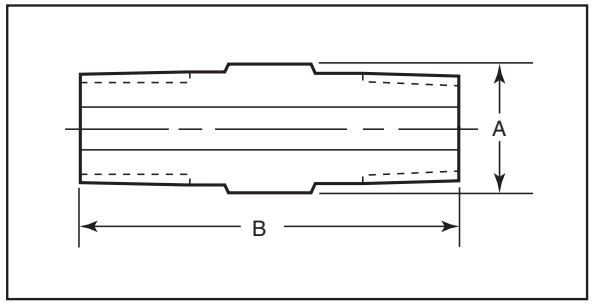

Medium-Pressure to Reverse High-Pressure (Type "M" Male) Adapters

Catalog Number	Connection M/P	Connection RH	Dimension inches (mm)	
			A Hex	B
20MAM4RH9	SF250CX	9/16”	0.63 (15.9)	1.56 (39.7)
20MAM4RH12	SF250CX	3/4”	0.81 (20.6)	1.88 (47.6)
20MAM4RH16	SF250CX	1”	1.00 (25.4)	2.13 (54.0)
20MAM6RH9	SF375CX	9/16”	0.63 (15.9)	1.69 (42.8)
20MAM6RH12	SF375CX	3/4”	0.81 (20.6)	1.81 (46.2)
20MAM6RH16	SF375CX	1”	1.00 (25.4)	2.25 (57.1)
20MAM9RH9	SF562CX	9/16”	0.94 (23.8)	2.00 (50.8)
20MAM9RH12	SF562CX	3/4”	0.94 (23.8)	2.13 (54.0)
20MAM9RH14	SF562CX	7/8”	0.94 (23.8)	2.44 (61.9)
20MAM9RH16	SF562CX	1”	1.00 (25.4)	2.25 (57.1)
20MAM9RH21	SF562CX	1-5/16”	1.38 (34.9)	2.38 (60.3)
20MAM12RH9	SF750CX	9/16”	1.19 (30.1)	2.38 (60.3)
20MAM12RH12	SF750CX	3/4”	1.19 (30.1)	2.44 (61.9)
20MAM12RH16	SF750CX	1”	1.19 (30.1)	2.50 (63.5)
20MAM12RH21	SF750CX	1-5/16”	1.50 (38.1)	2.75 (69.9)
20MAM16RH9	SF1000CX	9/16”	1.38 (34.9)	3.13 (79.3)
20MAM16RH12	SF1000CX	3/4”	1.38 (34.9)	3.19 (80.9)
20MAM16RH14	SF1000CX	7/8”	1.38 (34.9)	3.34 (84.9)
20MAM16RH16	SF1000CX	1”	1.38 (34.9)	3.38 (85.7)
20MAM16RH21	SF1000CX	1-5/16”	1.50 (38.1)	3.25 (82.6)
15MAM24RH12	SF1500CX	3/4”	1.88 (47.8)	3.88 (98.6)
15MAM24RH16	SF1500CX	1”	1.88 (47.8)	3.88 (98.6)
15MAM24RH21	SF1500CX	1-5/16”	1.88 (47.8)	3.88 (98.6)

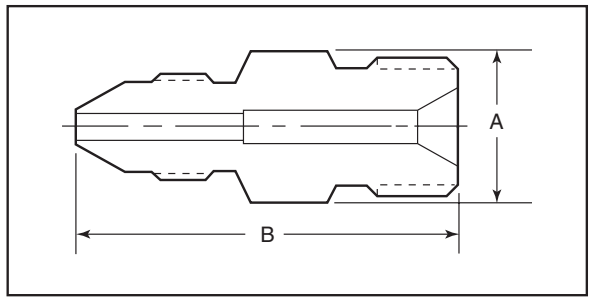

NOTE: NPT (Pipe) connections

- NPT threads must be sealed using a high quality PTFE tape and/or PTFE paste product. Refer to thread sealant manufacturer's instructions on how to apply thread sealant.
- Sealing performance may vary based on many factors such as pressure, temperature, media, thread quality, thread material, proper thread engagement and proper use of thread sealant.
- Customer should limit the number of times an NPT fitting is assembled and disassembled because thread deformation during assembly will result in deteriorating seal quality over time. When using only PTFE tape, consider using thread lubrication to prevent galling of mating parts.

Maximum pressure rating is based on the lowest rating of any component.
Actual working pressure may be determined by tubing pressure rating, if lower.
Note: For pressure rating see ordering procedure.
All Dimensions for reference only and are subject to change.
For prompt service, Parker Autoclave Engineers stocks select products. Consult factory.

All general terms and conditions of sale, including limitations of our liability, apply to all products and services sold.

High-Pressure to Reverse High-Pressure (Type "M" Male) Adapters

Catalog Number	Connection H/P	Connection RH	Dimension inches (mm)	
			A Hex	B
26MAH4RH16	F250C	1”	1.00 (25.4)	2.13 (54.0)
26MAH6RH16	F375C	1”	1.00 (25.4)	2.25 (57.1)
26MAH9RH16	F562C	1”	1.19 (30.1)	2.69 (68.2)
30MAH4RH12	F250C	3/4”	0.81 (20.6)	1.88 (47.6)
30MAH6RH12	F375C	3/4”	0.81 (20.6)	2.06 (54.0)
30MAH9RH12	F562C	3/4”	1.19 (30.1)	2.50 (63.5)
40MAH4RH9	F250C	9/16”	0.63 (15.9)	1.56 (39.7)
40MAH6RH9	F375C	9/16”	0.81 (20.6)	1.94 (49.1)
40MAH9RH9	F562C	9/16”	1.19 (30.1)	2.38 (60.3)

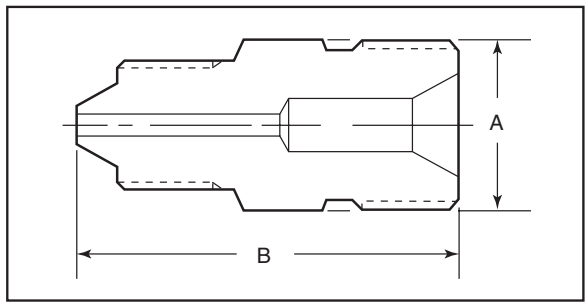

Reverse High-Pressure to Reverse High-Pressure (Type "M" Male to Type "M" Male) Adapters

Catalog Number	Connection RH	Connection RH	Dimension inches (mm)	
			A Hex	B
20MARH21RH21	1-5/16	1-5/16”	1.38 (34.9)	2.13 (54.1)
26MARH9RH16	9/16	1”	1.00 (25.4)	1.88 (47.6)
26MARH12RH16	3/4	1”	1.00 (25.4)	2.00 (50.8)
26MARH16RH16	1	1”	1.00 (25.4)	2.00 (50.8)
30MARH9RH12	9/16	3/4”	0.81 (20.6)	1.63 (41.2)
30MARH12RH12	3/4	3/4”	0.81 (20.6)	1.75 (44.5)
40MARH9RH9	9/16	9/16”	0.63 (15.9)	1.50 (38.1)

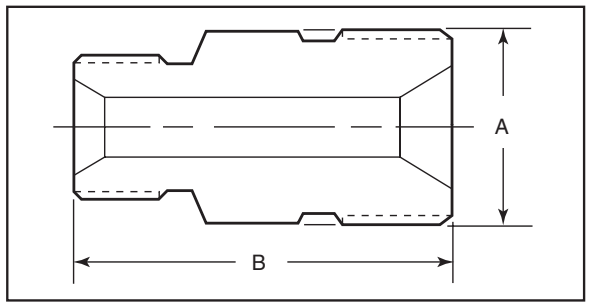

NPT to Reverse High-Pressure (Type "M" Male) Adapters

Catalog Number	Connection NPT	Connection RH	Dimension inches (mm)	
			A Hex	B
15MAP4RH9	1/4	9/16”	0.63 (15.9)	1.63 (41.2)
15MAP4RH12	1/4	3/4”	0.81 (20.6)	1.88 (47.6)
15MAP4RH16	1/4	1”	1.00 (25.4)	2.25 (57.1)
15MAP6RH9	3/8	9/16”	0.75 (19.1)	1.81 (46.2)
15MAP6RH12	3/8	3/4”	0.81 (20.6)	1.94 (49.1)
15MAP6RH16	3/8	1”	1.00 (25.4)	2.13 (54.0)
15MAP8RH9	1/2	9/16”	0.94 (23.8)	2.00 (50.8)
15MAP8RH12	1/2	3/4”	0.94 (23.8)	2.13 (54.0)
15MAP8RH14	1/2	7/8”	1.00 (25.4)	2.25 (57.1)
15MAP8RH16	1/2	1”	1.00 (25.4)	2.31 (58.7)
10MAP12RH12	3/4	3/4”	1.19 (30.1)	2.31 (58.7)
10MAP12RH16	3/4	1”	1.38 (34.9)	2.63 (66.7)
10MAP12RH21	3/4	1-5/16”	1.38 (34.9)	2.63 (66.7)
10MAP16RH9	1	9/16”	1.38 (34.9)	2.25 (57.2)
10MAP16RH16	1	1”	1.38 (34.9)	2.81 (71.4)
10MAP16RH21	1	1-5/16”	1.38 (34.9)	2.68 (68.0)

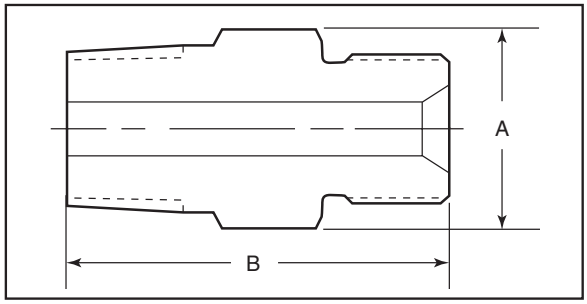

Maximum pressure rating is based on the lowest rating of any component.
Actual working pressure may be determined by tubing pressure rating, if lower.

Note: For pressure rating see ordering procedure.

All Dimensions for reference only and are subject to change.

For prompt service, Parker Autoclave Engineers stocks select products. Consult factory.

All general terms and conditions of sale, including limitations of our liability, apply to all products and services sold.

Male/Female Adapters - QSS Male/Female Adapters

Male /female adapters are designed to adapt a female connection to another size and/or type of connection without the need for additional couplings. In selecting an adapter involving two different sized connections, the larger connection should be on the male end where it is possible to maximize the mechanical strength of the adapter.

Materials

All Parker Autoclave Engineers adapters are precision machined from cold-worked Type 316 stainless steel.

To use this chart:

1. Locate MALE end in vertical column.
2. Locate desired FEMALE end of adapter across top of chart.
3. Catalog number of required adapter is located at intersection of columns.
4. For one piece adapter add-OP to suffix of part number.

				FEMALE END									
	Connection Size and Type			Quick Set				Medium Pressure					
				1/4" QS250	3/8" QS375	9/16" QS562	3/4" QS750	1/4" SF250CX	3/8" SF375CX	9/16" SF562CX	3/4" SF750CX	1" SF1000CX
		Fits this Female Connection	Pressure Rating PSI (bar)*	15,000 (1034.20)	15,000 (1034.20)	15,000 (1034.20)	15,000 (1034.20)	20,000 (1378.93)	20,000 (1378.93)	20,000 (1378.93)	20,000 (1378.93)	20,000 (1378.93)
MALE END – Quick Set	1/4"	QS250	15,000 (1034.20)		15M46QQ	15M49QQ	15M412QQ	15M44Q6	15M46Q6	15M49Q6	15M412Q6	15M416Q6
	3/8"	QS375	15,000 (1034.20)	15M64QQ		15M69QQ	15M612QQ	15M64Q6	15M66Q6	15M69Q6	15M612Q6	15M616Q6
	9/16"	QS562	15,000 (1034.20)	15M94QQ	15M94QQ		15M912QQ	15M94Q6	15M96Q6	15M99Q6	15M912Q6	15M916Q6
	3/4"	QS750	15,000 (1034.20)	15M124QQ	15M126QQ	15M129QQ		15M124Q6	15M126Q6	15M129Q6	15M1212Q6	15M1216Q6
MALE END – Medium Pressure	1/4"	SF250CX	20,000 (1378.93)	15M44KQ	15M46KQ	15M49KQ	15M412KQ					
	3/8"	SF375CX	20,000 (1378.93)	15M64KQ	15M66KQ	15M69KQ	15M612KQ					
	9/16"	SF562CX	20,000 (1378.93)	15M94KQ	15M96KQ	15M99KQ	15M912KQ					
	3/4"	SF750CX	20,000 (1378.93)	15M124KQ	15M126KQ	15M129KQ	15M1212KQ					
	1"	SF1000CX	20,000 (1378.93)	15M164KQ	15M166KQ	15M169KQ	15M1612KQ					
MALE END – High Pressure	1/4"	F250C	60,000 (4136.85)	15M44BQ	15M46BQ	15M49BQ	15M412BQ					
	3/8"	F375C	60,000 (4136.85)	15M64BQ	15M66BQ	15M69BQ	15M612BQ					
	9/16"	F562C	60,000 (4136.85)	15M94BQ	15M96BQ	15M99BQ	15M912BQ					
MALE END – National Pipe Thread (NPT)	1/4"	NPT	15,000 (1034.20)	15M44NQ	15M46NQ	15M49NQ	15M412NQ					
	3/8"	NPT	15,000 (1034.20)	15M64NQ	15M66NQ	15M69NQ	15M612NQ					
	1/2"	NPT	15,000 (689.45)	15M84NQ	15M86NQ	15M89NQ	15M812NQ					
	3/4"	NPT	10,000 (689.45)	10M124NQ	10M126NQ	10M129NQ	10M1212NQ					
	1"	NPT	10,000 (689.45)	10M164NQ	10M166NQ	10M169NQ	10M1612NQ					

Note:
All Parker Autoclave Engineers adapters are supplied complete with appropriate gland nuts and sleeves unless specified without.
** The maximum pressure rating for an adapter is determined by the connection component with the LOWEST pressure rating; that is, the two end connections and the tubing or pipe used, whichever is LOWER.*
CAUTION: See appropriate pressure section in reference to proper selection of tubing.

NOTE: NPT (Pipe) connections

- NPT threads must be sealed using a high quality PTFE tape and/or PTFE paste product. Refer to thread sealant manufacturer's instructions on how to apply thread sealant.
- Sealing performance may vary based on many factors such as pressure, temperature, media, thread quality, thread material, proper thread engagement and proper use of thread sealant.
- Customer should limit the number of times an NPT fitting is assembled and disassembled because thread deformation during assembly will result in deteriorating seal quality over time. When using only PTFE tape, consider using thread lubrication to prevent galling of mating parts.

All general terms and conditions of sale, including limitations of our liability, apply to all products and services sold.

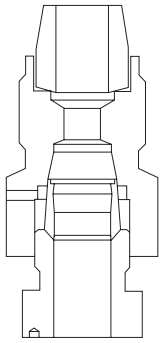

Quick Set Female
to
Quick Set Male

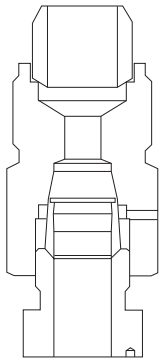

Quick Set Female
to
Medium Pressure Male

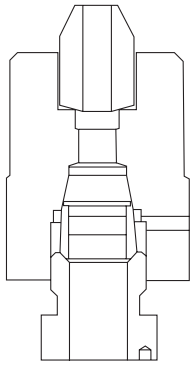

Quick Set Female
to
High Pressure Male

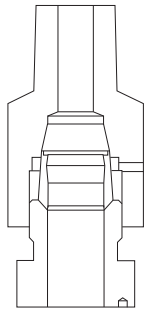

Quick Set Female
to
National Pipe Male

FEMALE END							
High Pressure			**National Pipe Thread (NPT)**				
1/4" F250C	3/8" F375C	9/16" F562C	1/4" NPT	3/8" NPT	1/2" NPT	3/4" NPT	1" NPT
60,000 (4136.85)	60,000 (4136.85)	150,000 (10342.14)	15,000 (1034.20)	15,000 (1034.20)	15,000 (1034.20)	10,000 (689.45)	10,000 (689.45)
15M44Q3	15M46Q3	15M49Q3	15M44Q8	15M46Q8	15M48Q8	10M412Q8	10M416Q8
15M64Q3	15M66Q3	15M69Q3	15M64Q8	15M66Q8	15M68Q8	10M612Q8	10M616Q8
15M94Q3	15M96Q3	15M99Q3	15M94Q8	15M96Q8	15M98Q8	10M912Q8	10M916Q8
15M124Q3	15M126Q3	15M129Q3	15M124Q8	15M126Q8	15M128Q8	10M1212Q8	10M1216Q8

AE Male/Female Adapters are available in a "one-piece" design. They are identical to the two piece designs in length and can be ordered by adding the suffix - OP to the two piece adapter part numbers listed.

For prompt service, Parker Autoclave Engineers stocks select products. Consult factory.factory.

All general terms and conditions of sale, including limitations of our liability, apply to all products and services sold.

Tel: +45 63 12 83 00 | Email: ps@hymatik.com | www.hymatik.com | Hvidkaervej 27a, DK-5250 Odense SV, Denmark

QS Series

Male End Fits this Connection	Female End	Catalog Number	Dimension inches (mm)	
			A Hex	B
QS250	QS250			
QS250	QS375	15M46QQ		
QS250	QS562	15M49QQ	1.38 (34.9)	2.25 (57.1)
QS250	QS750	15M412QQ		
QS250	SF250CX	15M44Q6		
QS250	SF375CX	15M46Q6		
QS250	SF562CX	15M49Q6		
QS250	SF750CX	15M412Q6		
QS250	SF1000CX	15M416Q6		
QS250	F250C	15M44Q3		
QS250	F375C	15M46Q3		
QS250	F562C	10M49Q3		
QS250	1/4 NPT	15M44Q8	0.75 (19.1)	1.69 (42.9)
QS250	3/8 NPT	15M46Q8		
QS250	1/2 NPT	15M48Q8		
QS250	3/4 NPT	10M412Q8		
QS250	1 NPT	10M416Q8		
QS375	QS250	15M64QQ	0.75 (19.1)	1.53 (38.9)
QS375	QS375			
QS375	QS562	15M69QQ		
QS375	QS750	15M612QQ	1.50 (38.1)	2.78 (70.6)
QS375	SF250CX	15M64Q6		
QS375	SF375CX	15M66Q6	0.75 (19.1)	1.66 (42.2)
QS375	SF562CX	15M69Q6	1.00 (25.4)	1.78 (45.2)
QS375	SF750CX	15M612Q6		
QS375	SF1000CX	15M616Q6		
QS375	F250C	15M64Q3		
QS375	F375C	15M66Q3		
QS375	F562C	15M69Q3		
QS375	1/4 NPT	15M64Q8	0.75 (19.1)	1.66 (42.2)
QS375	3/8 NPT	15M66Q8	1.00 (25.4)	1.78 (45.3)
QS375	1/2 NPT	15M68Q8	1.19 (30.1)	2.16 (54.8)
QS375	3/4 NPT	10M612Q8		
QS375	1 NPT	10M616Q8		

For prompt service, Parker Autoclave Engineers stocks select products. Consult factory.

Male End Fits this Connection	Female End	Catalog Number	Dimension inches (mm)	
			A Hex	B
QS562	QS250	15M94QQ	1.00 (25.4)	1.85 (46.8)
QS562	QS375	15M96QQ	1.00 (25.4)	1.85 (46.8)
QS562	QS562			
QS562	QS750	15M912QQ	1.50 (38.1)	3.16 (80.3)
QS562	SF250CX	15M94Q6		
QS562	SF375CX	15M96Q6		
QS562	SF562CX	15M99Q6		
QS562	SF750CX	15M912Q6		
QS562	SF1000CX	15M916Q6		
QS562	F250C	15M94Q3		
QS562	F375C	15M96Q3		
QS562	F562C	15M99Q3		
QS562	1/4 NPT	15M94Q8	1.19 (30.1)	2.22 (56.4)
QS562	3/8 NPT	15M96Q8	1.19 (30.1)	2.22 (56.4)
QS562	1/2 NPT	15M98Q8	1.19 (30.1)	2.41 (61.1)
QS562	3/4 NPT	10M912Q8	1.38 (35.1)	2.56 (65.0)
QS562	1 NPT	10M916Q8		
QS750	QS250	15M124QQ		
QS750	QS375	15M126QQ	1.50 (38.1)	2.53 (64.1)
QS750	QS562	15M129QQ	1.50 (38.1)	2.53 (64.1)
QS750	QS750			
QS750	SF250CX	15M124Q6		
QS750	SF375CX	15M126Q6		
QS750	SF562CX	15M129Q6		
QS750	SF750CX	15M1212Q6		
QS750	SF1000CX	15M1216Q6		
QS750	F250C	15M124Q3		
QS750	F375C	15M126Q3		
QS750	F562C	15M129Q3		
QS750	1/4 NPT	15M124Q8	0.75 (19.1)	1.66 (42.2)
QS750	3/8 NPT	15M126Q8	1.00 (25.4)	1.78 (45.3)
QS750	1/2 NPT	15M128Q8	1.50 (38.1)	2.78 (70.5)
QS750	3/4 NPT	10M1212Q8		
QS750	1 NPT	10M1216Q8		

Maximum pressure rating is based on the lowest rating of any component.
Actual working pressure may be determined by tubing pressure rating, if lower.
Note: For pressure rating see selection chart.
All Dimensions for reference only and subject to change.

QSS to Pipe

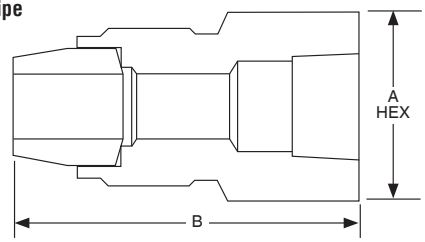

QSS to QSS

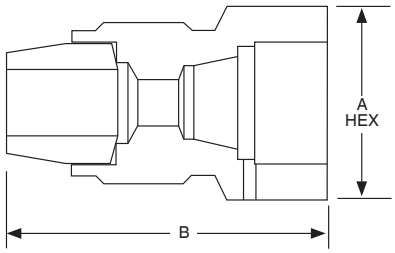

All general terms and conditions of sale, including limitations of our liability, apply to all products and services sold.

QS Series

Male End Fits this Connection	Female End	Catalog Number	Dimension inches (mm)	
			A Hex	B
SF250CX	QS250	15M44KQ	0.75 (19.1)	1.68 (42.7)
SF250CX	QS375	15M46KQ	0.81 (20.6)	1.68 (42.7)
SF250CX	QS562	15M49KQ	1.19 (30.1)	2.22 (56.4)
SF250CX	QS750	15M412KQ		
SF375CX	QS250	15M64KQ	0.75 (19.1)	1.63 (41.4)
SF375CX	QS375	15M66KQ	0.81 (20.6)	1.81 (46.1)
SF375CX	QS562	15M69KQ		
SF375CX	QS750	15M612KQ	1.50 (38.1)	3.00 (76.20)
SF562CX	QS250	15M94KQ	0.94 (23.8)	1.75 (44.5)
SF562CX	QS375	15M96KQ	0.94 (23.8)	1.75 (44.5)
SF562CX	QS562	15M99KQ	1.38 (34.9)	2.50 (63.5)
SF562CX	QS750	15M912KQ	1.50 (38.1)	3.25 (82.6)
SF750CX	QS250	15M124KQ		
SF750CX	QS375	15M126KQ		
SF750CX	QS562	15M129KQ	1.38 (34.9)	2.50 (63.5)
SF750CX	QS750	15M1212KQ	1.50 (38.1)	3.06 (77.7)
SF1000CX	QS250	15M164KQ		
SF1000CX	QS375	15M166KQ		
SF1000CX	QS562	15M169KQ	1.50 (38.1)	2.88 (73.0)
SF1000CX	QS750	15M1612KQ	1.50 (38.1)	3.38 (85.7)

Male End Fits this Connection	Female End	Catalog Number	Dimension inches (mm)	
			A Hex	B
F250C	QS250	15M44BQ	0.75 (19.1)	1.31 (33.3)
F250C	QS375	15M46BQ	0.81 (20.6)	1.56 (39.7)
F250C	QS562	15M49BQ		
F250C	QS750	15M412BQ		
F375C	QS250	15M64BQ		
F375C	QS375	15M66BQ	0.81 (20.6)	1.69 (42.9)
F375C	QS562	15M69BQ		
F375C	QS750	15M612BQ		
F562C	QS250	15M94BQ	1.19 (30.1)	1.81(46.1)
F562C	QS375	15M96BQ	1.19 (30.1)	1.69 (42.9)
F562C	QS562	15M99BQ	1.38 (34.9)	2.32 (58.8)
F562C	QS750	15M912BQ	1.50 (38.1)	3.06 (77.7)

MP to QSS

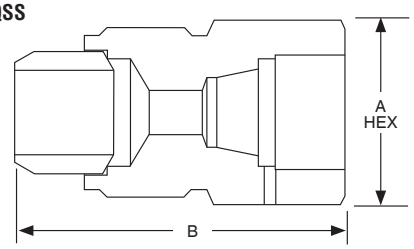

HP to QSS

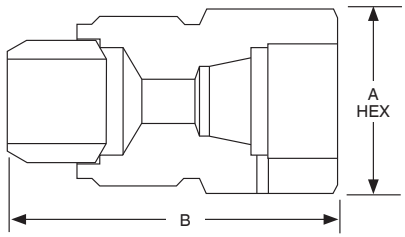

Maximum pressure rating is based on the lowest rating of any component.
Actual working pressure may be determined by tubing pressure rating, if lower.
Note: For pressure rating see selection chart.
All Dimensions for reference only and subject to change.
Adapter configurations may vary from outline shown.

FFor prompt service, Parker Autoclave Engineers stocks select products. Consult factory.

All general terms and conditions of sale, including limitations of our liability, apply to all products and services sold.

Male End Fits this Connection	Female End	Catalog Number	Dimension inches (mm)	
			A Hex	B
1/4 NPT	QS250	15M44NQ	0.75 (19.1)	1.44 (36.5)
1/4 NPT	QS375	15M46NQ	0.81 (20.6)	1.63 (41.3)
1/4 NPT	QS562	15M49NQ		
1/4 NPT	QS750	15M412NQ		
3/8 NPT	QS250	15M64NQ	0.75 (19.1)	1.50 (38.1)
3/8 NPT	QS375	15M66NQ	0.81 (20.6)	1.63 (41.3)
3/8 NPT	QS562	15M69NQ	1.38 (35.1)	2.13 (53.5)
3/8 NPT	QS750	15M612NQ		
1/2 NPT	QS250	15M84NQ	0.94 (23.8)	1.75 (44.5)
1/2 NPT	QS375	15M86NQ	0.94 (23.8)	1.63 (41.3)
1/2 NPT	QS562	15M89NQ	1.38 (35.1)	2.25 (57.2)
1/2 NPT	QS750	15M812NQ	1.50 (38.1)	2.81 (71.4)
3/4 NPT	QS250	10M124NQ		
3/4 NPT	QS375	10M126NQ		
3/4 NPT	QS562	10M129NQ	1.38 (35.1)	2.38 (60.3)
3/4 NPT	QS750	10M1212NQ	1.50 (38.1)	2.81 (71.4)
1 NPT	QS250	10M164NQ		
1 NPT	QS275	10M166NQ		
1 NPT	QS562	10M169NQ	1.50 (38.1)	2.38 (60.3)
1 NPT	QS750	10M1612NQ	1.50 (38.1)	2.38 (60.3)

NPT to QSS

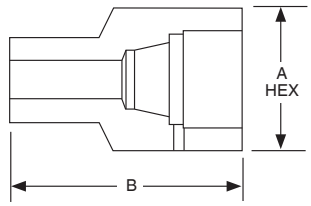

Maximum pressure rating is based on the lowest rating of any component.
Actual working pressure may be determined by tubing pressure rating, if lower.
Note: For pressure rating see selection chart.
All Dimensions for reference only and subject to change.
Adapter configurations may vary from outline shown.

For prompt service, Parker Autoclave Engineers stocks select products. Consult factory.

All general terms and conditions of sale, including limitations of our liability, apply to all products and services sold.

Male/Male Adapters - QSS Male/Male Adapters

Parker Autoclave Engineer's standard male-to-male one piece adapters are available in multiple configurations. Standard male-to-male adapters are machined from cold worked stainless steel.Contact your local Sales Representative for optional information. The following tables list our standard adapters with dimensions.

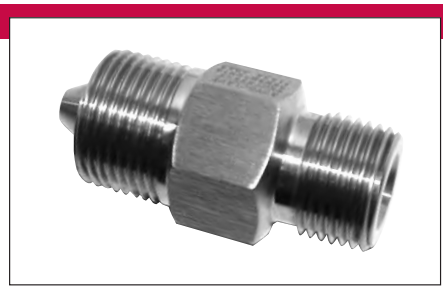

Adapter End Configuration

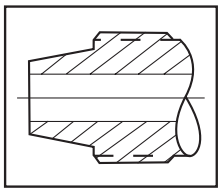

QS Series

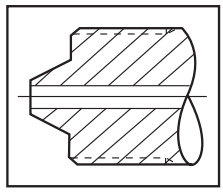

'H' High Pressure

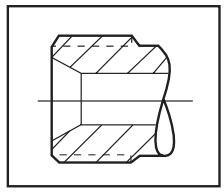

'RH' Reverse High Pressure

(Type "M" Male Adapter)

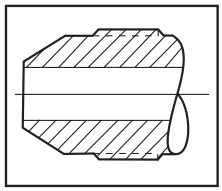

'M' Medium Pressure

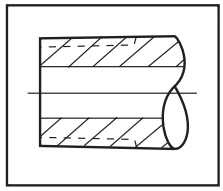

'P' National Pipe Tapered

Ordering Procedure

Typical catalog number: 15 MA Q4 H9

15 — **Pressure (X 1000 psi)**

MA — **Male Adapter**

Q4 — **Available End Connections**

H9 — **Available End Connections**

Q4 - 1/4" QS Series	**M4** - 1/4" Medium Pressure	**H4** - 1/4" High Pressure	**P4** - 1/4" NPT	***RH9** - 9/16" -18 Reverse High
Q6 - 3/8" QS Series	**M6** - 3/8" Medium Pressure	**H5** - 5/16" High Pressure	**P6** - 3/8" NPT	**RH12** - 3/4" -16 Reverse High
Q9 - 9/16" QS Series	**M9** - 9/16" Medium Pressure	**H6** - 3/8" High Pressure	**P8** - 1/2" NPT	**RH14** - 7/8" -14 Reverse High
Q12 - 3/4" QS Series	**M12** - 3/4" Medium Pressure	**H9** - 9/16" High Pressure	**P12** - 3/4" NPT	**RH16** - 1" -12 Reverse High
	M16 - 1" Medium Pressure		**P16** - 1" NPT	**RH21** - 1-5/16" -12 Reverse High

*RH9 & RH14 - 40,000 psi (2758 bar), RH12 - 30,000 psi (2068 bar), RH16 - 26,000 psi (1793 bar), RH21 - 20,000 psi (1379 bar).

RH or "Reverse High Pressure" Connection is also know as "Type "M" Male Connection"

All general terms and conditions of sale, including limitations of our liability, apply to all products and services sold.

Tel: +45 63 12 83 00 | Email: ps@hymatik.com | www.hymatik.com | Hvidkaervej 27a, DK-5250 Odense SV, Denmark

QS Series to Reverse High-Pressure (Type "M" Male) Adapters

Catalog Number	Connection QS	Connection RH	Dimension inches (mm)	
			A Hex	B
15MAQ4RH9	QS250	9/16”	0.63 (15.9)	1.70 (43.2)
15MAQ6RH9	QS375	9/16”	0.75 (19.1)	1.81 (46.2)
15MAQ9RH9	QS562	9/16”	1.19 (30.1)	2.25 (57.1)
15MAQ9RH12	QS562	3/4”	1.19 (30.1)	2.38 (60.3)
15MAQ9RH16	QS562	1”	1.19 (30.1)	2.56 (65.1)
15MAQ12RH9	QS750	9/16”	1.38 (35.1)	3.00 (76.2)
15MAQ16RH9	QS1000	9/16”	1.75 (44.45)	3.25 (82.55)

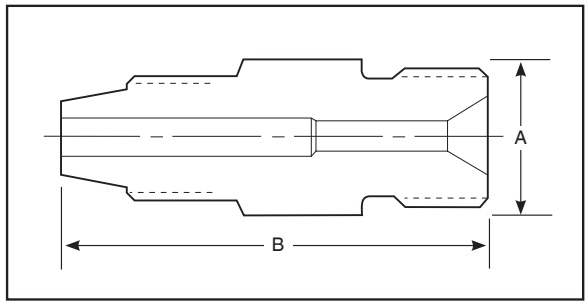

QS Series to High-Pressure Adapter

Catalog Number	Connection QS	Connection H/P	Dimension inches (mm)	
			A Hex	B
15MAQ9H4	QS562	1/4”	0.75 (19.1)	2.00 (50.8)

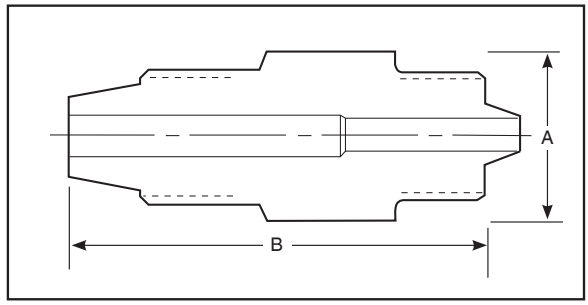

QS Series to NPT Adapter

Catalog Number	Connection QS	Connection NPT	Dimension inches (mm)	
			A Hex	B
15MAQ6P4	QS375	1/4”	1.19 (30.1)	2.44 (62.0)
15MAQ6P8	QS375	1/2”	.94 (23.9)	2.19 (55.6)
15MAQ9P4	QS562	1/4”	1.00 (25.4)	2.44 (62.0)

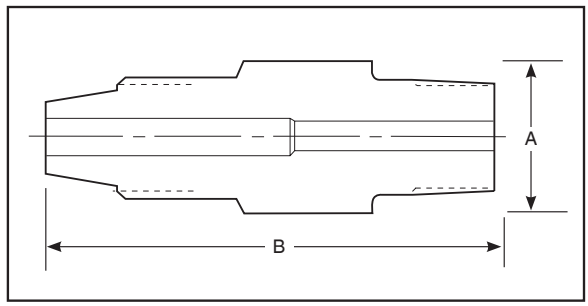

QS Series to JIC Adapter

Catalog Number	Connection QS	Connection NPT	Dimension inches (mm)	
			A Hex	B
15MAQ6J4	QS375	1/4”	0.75 (19.1)	1.75 (44.5)

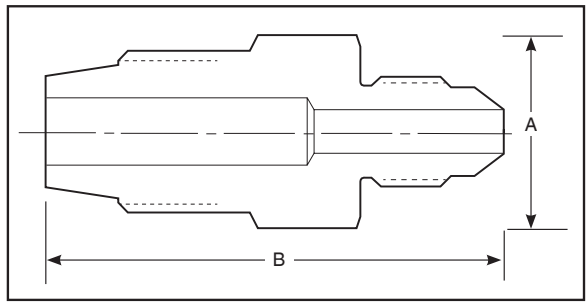

All general terms and conditions of sale, including limitations of our liability, apply to all products and services sold.

Tel: +45 63 12 83 00 | Email: ps@hymatik.com | www.hymatik.com | Hvidkaervej 27a, DK-5250 Odense SV, Denmark

Adapters/Couplings - Male/Male JIC Adapters

Parker Autoclave Engineer's male-to-male JIC one-piece adapters are available in low, medium, and high pressure configurations. JIC adapters are machined from cold worked stainless steel. Other materials are available upon request. Contact your local Sales Representative for optional information. The following tables list our standard adapters with dimensions.

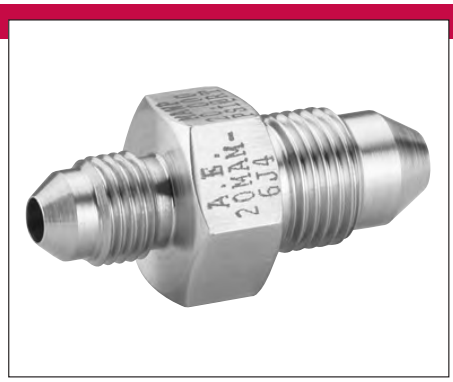

Adapter End Configuration

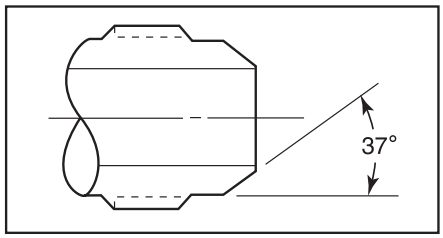

JIC connections consist of a 37° angle.

Ordering Procedure

Typical catalog number: 20 MA M4 J4

20	MA	M4	J4
Pressure (X 1000 psi)	**Male Adapter**	**Available End Connections**	

***J4** - 1/4" JIC	**L4** - 1/4" Low Pressure	**M4** - 1/4" Medium Pressure	**H4** - 1/4" High Pressure	**P4** - 1/4" NPT
J6 - 3/8" JIC	**L6** - 3/8" Low Pressure	**M6** - 3/8" Medium Pressure	**H6** - 3/8" High Pressure	**P6** - 3/8" NPT
J8 - 1/2" JIC	**L8** - 1/2" Low Pressure	**M9** - 9/16" Medium Pressure	**H9** - 9/16" High Pressure	**P8** - 1/2" NPT
J10 - 5/8" JIC		**M12** - 3/4" Medium Pressure		**P12** - 3/4" NPT
J12 - 3/4" JIC		**M16** - 1" Medium Pressure		**P16** - 1" NPT
J16 - 1" JIC				

Note: Special material one piece adapters may be supplied with four flats in place of standard hex.

*J4, J6, J8 & J10 - 20,000 psi (1380 bar), J12 & J16 - 15,000 psi (1034 bar)

Thread Sizes
J4 - 7/16-20
J6 - 9/16-18
J8 - 3/4-16
J10 - 7/8-14
J12 - 1-1/16-12
J16 - 1-5/16-12

All general terms and conditions of sale, including limitations of our liability, apply to all products and services sold.

Low-Pressure to JIC Adapters

Catalog Number	Connection L/P	Connection JIC	Dimension inches (mm)	
			A Hex	B
15MAL4J4	SW250	1/4”	0.75 (19.1)	1.88 (47.6)
15MAL6J4	SW375	1/4”	0.75 (19.1)	2.00 (50.8)
15MAL6J6	SW375	3/8”	0.81 (20.6)	2.00 (50.8)

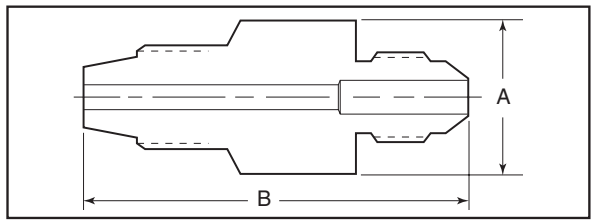

Medium-Pressure to JIC Adapters

Catalog Number	Connection M/P	Connection JIC	Dimension inches (mm)	
			A Hex	B
15MAM4J12	SF250CX	3/4”	1.38 (34.9)	2.25 (57.1)
15MAM4J16	SF250CX	1”	1.50 (38.1)	2.38 (60.3)
15MAM6J12	SF375CX	3/4”	1.38 (34.9)	2.44 (61.3)
15MAM6J16	SF375CX	1”	1.50 (38.1)	2.53 (64.9)
15MAM9J12	SF562CX	3/4”	1.38 (34.9)	2.69 (68.2)
15MAM9J16	SF562CX	1”	1.50 (38.1)	2.78 (70.6)
15MAM12J12	SF750CX	3/4”	1.38 (34.9)	2.88 (73.0)
15MAM12J16	SF750CX	1”	1.50 (38.1)	2.88 (73.0)
15MAM16J12	SF1000CX	3/4”	1.38 (34.9)	3.38 (85.7)
15MAM16J16	SF1000CX	1”	1.50 (38.1)	3.50 (89.0)
20MAM4J4	SF250CX	1/4”	0.75 (19.1)	1.63 (41.3)
20MAM4J6	SF250CX	3/8”	0.81 (20.6)	1.75 (44.5)
20MAM4J8	SF250CX	1/2”	1.00 (25.4)	2.00 (50.8)
20MAM6J4	SF375CX	1/4”	0.75 (19.1)	1.75 (44.5)
20MAM6J6	SF375CX	3/8”	0.81 (20.6)	1.81 (46.0)
20MAM6J8	SF375CX	1/2”	1.00 (25.4)	2.00 (50.8)
20MAM9J4	SF562CX	1/4”	0.94 (23.8)	2.13 (54.0)
20MAM9J6	SF562CX	3/8”	0.94 (23.8)	2.13 (54.0)
20MAM9J8	SF562CX	1/2”	1.00 (25.4)	2.25 (57.1)
20MAM9J10	SF562CX	5/8”	1.19 (30.1)	2.25 (57.1)
20MAM12J4	SF750CX	1/4”	1.19 (30.1)	2.38 (60.3)
20MAM12J6	SF750CX	3/8”	1.19 (30.1)	2.38 (60.3)
20MAM12J8	SF750CX	1/2”	1.19 (30.1)	2.50 (63.5)
20MAM16J4	SF1000CX	1/4”	1.38 (34.9)	3.13 (79.3)
20MAM16J6	SF1000CX	3/8”	1.38 (34.9)	3.13 (79.3)
20MAM16J8	SF1000CX	1/2”	1.38 (34.9)	3.13 (79.3)
15MAM24J16*	1.88	1"	1.88 (47.75)	4.25 (107.9)

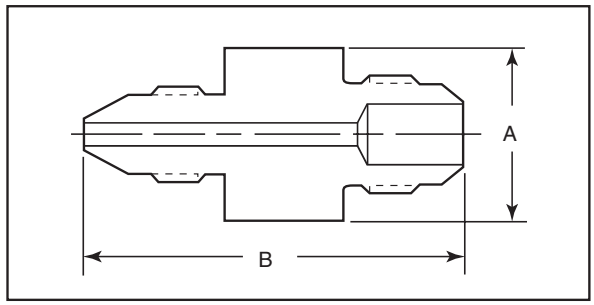

*Note: O.D. is 2.13 (54.10) supplied with flats.

High-Pressure to JIC Adapters

Catalog Number	Connection H/P	Connection JIC	Dimension inches (mm)	
			A Hex	B
20MAH4J2	F250C	1/8”	0.63 (15.9)	1.50 (38.1)
20MAH4J4	F250C	1/4”	0.75 (19.1)	1.63 (41.3)
20MAH4J6	F250C	3/8”	0.81 (20.6)	1.63 (41.3)
20MAH4J8	F250C	1/2”	1.00 (25.4)	1.88 (47.6)
20MAH6J4	F375C	1/4”	0.81 (20.6)	1.94 (49.1)
20MAH6J6	F375C	3/8”	0.81 (20.6)	1.94 (49.1)
20MAH6J8	F375C	1/2”	1.00 (25.4)	2.19 (55.5)
20MAH9J4	F562C	1/4”	1.19 (30.1)	2.31 (58.7)
20MAH9J6	F562C	3/8”	1.19 (30.1)	2.31 (58.7)
20MAH9J8	F562C	1/2”	1.19 (30.1)	2.38 (60.3)
20MAH4J10	F250C	5/8”	1.19 (30.1)	2.13 (54.0)

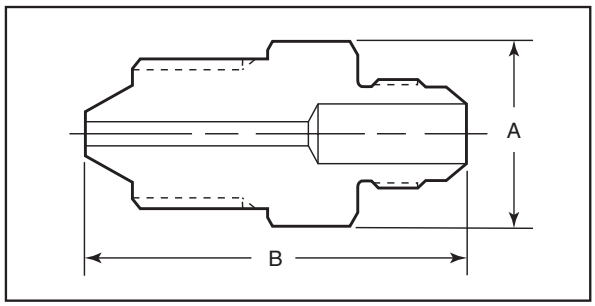

Maximum pressure rating is based on the lowest rating of any component.
Actual working pressure may be determined by tubing pressure rating, if lower.

Note: For pressure rating see ordering procedure.
All Dimensions for reference only and are subject to change.
For prompt service, Parker Autoclave Engineers stocks select products. Consult factory.

All general terms and conditions of sale, including limitations of our liability, apply to all products and services sold.

JIC to JIC Adapters

Catalog Number	Connection JIC	Connection JIC	Dimension inches (mm)	
			A Hex	B
20MAJ4J4	1/4”	1/4”	0.75 (19.1)	1.56 (39.7)
20MAJ4J6	1/4”	3/8”	0.81 (20.6)	1.56 (39.7)
20MAJ4J8	1/4”	1/2”	1.00 (25.4)	1.75 (44.5)
20MAJ6J6	3/8”	3/8”	0.81 (20.6)	1.56 (39.7)
20MAJ6J8	3/8”	1/2”	1.00 (25.4)	1.75 (44.5)
20MAJ8J8	1/2”	1/2”	1.00 (25.4)	1.81 (46.0)

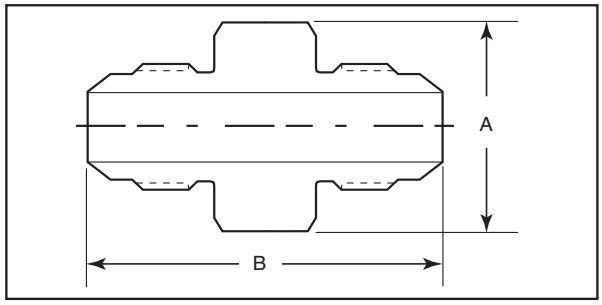

NPT to JIC Adapters

Catalog Number	Connection NPT	Connection JIC	Dimension inches (mm)	
			A Hex	B
15MAP4J4	1/4”	1/4”	0.75 (19.1)	1.69 (42.8)
15MAP4J6	1/4”	3/8”	0.81 (20.6)	1.75 (44.5)
15MAP4J8	1/4”	1/2”	1.00 (25.4)	1.94 (49.1)
15MAP4J12	1/4”	3/4”	1.38 (34.9)	2.25 (57.1)
15MAP6J4	3/8”	1/4”	0.75 (19.1)	1.69 (42.8)
15MAP6J6	3/8”	3/8”	0.81 (20.6)	1.75 (44.5)
15MAP6J8	3/8”	1/2”	1.00 (25.4)	1.81 (46.0)
15MAP6J12	3/8”	3/4”	1.38 (34.9)	2.25 (57.1)
15MAP8J4	1/2”	1/4”	0.94 (23.8)	2.00 (50.8)
15MAP8J6	1/2”	3/8”	0.94 (23.8)	2.00 (50.8)
15MAP8J8	1/2”	1/2”	1.00 (25.4)	2.13 (54.0)
15MAP8J12	1/2”	3/4”	1.38 (34.9)	2.44 (61.9)
15MAP12J8	3/4”	1/2”	1.19 (30.2)	2.38 (60.3)
15MAP12J12	3/4”	3/4”	1.38 (34.9)	2.50 (63.5)
15MAP16J16	1”	1”	1.50 (38.1)	3.00 (76.2)

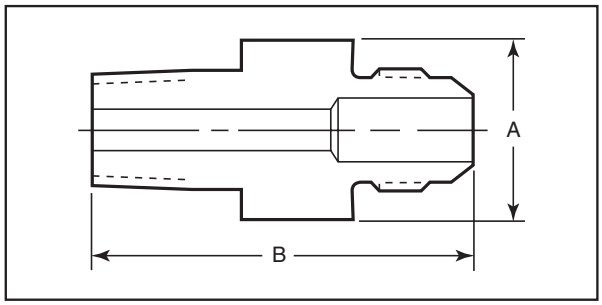

Maximum pressure rating is based on the lowest rating of any component.
Actual working pressure may be determined by tubing pressure rating, if lower.

Note: For pressure rating see ordering procedure.

All Dimensions for reference only and are subject to change.

For prompt service, Parker Autoclave Engineers stocks select products. Consult factory.

NOTE: NPT (Pipe) connections

- NPT threads must be sealed using a high quality PTFE tape and/or PTFE paste product. Refer to thread sealant manufacturer’s instructions on how to apply thread sealant.
- Sealing performance may vary based on many factors such as pressure, temperature, media, thread quality, thread material, proper thread engagement and proper use of thread sealant.
- Customer should limit the number of times an NPT fitting is assembled and disassembled because thread deformation during assembly will result in deteriorating seal quality over time. When using only PTFE tape, consider using thread lubrication to prevent galling of mating parts.

All general terms and conditions of sale, including limitations of our liability, apply to all products and services sold.

Adapters/Couplings - Male/Female JIC Adapters

Male /female adapters are designed to adapt a female connection to another size and/or type of connection without the need for additional couplings. In selecting an adapter involving two different sized connections, the larger connection should be on the male end where it is possible to maximize the mechanical strength of the adapter.

To use this chart:

1. Locate MALE end in vertical column.
2. Locate desired FEMALE end of adapter across top of chart.
3. Catalog number of required adapter is located at intersection of columns.
4. For one piece adapter add-OP to suffix of part number where applicable.

Other Adapters

Parker Autoclave Engineers supplies many other types of adapters on special order. These include Parker Autoclave UniVersa-Lok swaged-type connections, socketweld to O.D. tube or nominal pipe size, male or female AN connections and others.

Materials

All Parker Autoclave Engineers adapters are precision machined from cold-worked Type 316 stainless steel. Other materials available on special order.

Note: Special material couplings may be supplied with four flats in place of standard hex.

					FEMALE END									
	Connection Size and Type				JIC						Medium Pressure		
					1/4" JIC4	3/8" JIC6	1/2" JIC8	5/8" JIC10	3/4" JIC12	1" JIC16	1/4" SF250CX	3/8" SF375CX	9/16" SF562CX
		Fits this Female Connection	Pressure Rating PSI (bar)*		20,000 (1378.93)	20,000 (1378.93)	20,000 (1378.93)	20,000 (1378.93)	15,000 (1034.20)	15,000 (1034.20)	20,000 (1378.93)	20,000 (1378.93)	20,000 (1378.93)
MALE END	JIC												
	1/4"	JIC4	20,000 (1378.93)								20MFAJ4M4	20MFAJ4M6	20MFAJ4M9
	3/8"	JIC6	20,000 (1378.93)				20MFAJ6J8				20MFAJ6M4	20MFAJ6M6	20MFAJ6M9
	1/2"	JIC8	20,000 (1378.93)								20MFAJ8M4	20MFAJ8M6	20MFAJ8M9
	5/8"	JIC10	20,000 (1378.93)									20MFAJ10M6	20MFAJ10M9
	3/4"	JIC12	15,000 (1034.20)	15MFAJ12J4							15MFAJ12M4	15MFAJ12M6	15MFAJ12M9
	1"	JIC16	15,000 (1034.20)								15MFAJ16M4	15MFAJ16M6	15MFAJ16M9
	Medium Pressure												
	1/4"	SF250CX	20,000 (1378.93)	20MFAM4J4	20MFAM4J6								
	3/8"	SF375CX	20,000 (1378.93)	20MFAM6J4	20MFAM6J6	20MFAM6J8							
	9/16"	SF562CX	20,000 (1378.93)		20MFAM9J6		20MFAM9J10						
	3/4"	SF750CX	20,000 (1378.93)	20MFAM12J4									
	1"	SF1000CX	20,000 (1378.93)										
	1-1/2"	SF1500CX	15,000 (1034.20)										
	High Pressure												
	1/4"	F250C	60,000 (4136.85)	20MFAH4J4									
	3/8"	F375C	60,000 (4136.85)										
	9/16"	F562C	60,000 (4136.85)						15MFAH9J12				
	National Pipe Thread (NPT)												
	1/4"	NPT	15,000 (1034.20)		15MFAP4J6								
	3/8"	NPT	15,000 (1034.20)		15MFAP6J6								
	1/2"	NPT	15,000 (1034.20)										
	3/4"	NPT	10,000 (689.45)										
	1"	NPT	10,000 (689.45)										

Note:
All adapters with Parker Autoclave connections are supplied with appropriate glands, collars, tube nuts and sleeves unless specified without.
JIC connections are not supplied with connection components.

** The maximum pressure rating for an adapter is determined by the connection component with the LOWEST pressure rating; that is, the two end connections and the tubing or pipe used, whichever is LOWER.*
CAUTION: See appropriate pressure section in reference to proper selection of tubing.

All general terms and conditions of sale, including limitations of our liability, apply to all products and services sold.

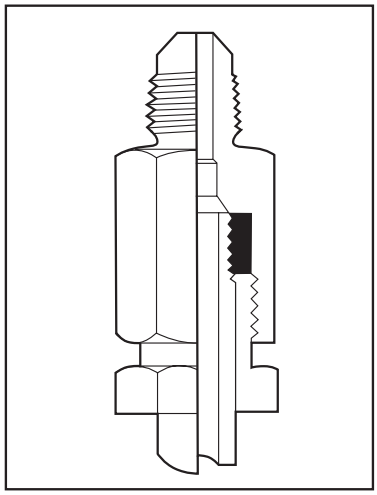

FEMALE END										
Medium Pressure			High Pressure			National Pipe Thread (NPT)				
3/4" F750CX	1" F1000CX	1-1/2" SF1500CX	1/4" F250C	3/8" F375C	9/16" F562C	1/4" NPT	3/8" NPT	1/2" NPT	3/4" NPT	1" NPT
20,000 (1378.93)	20,000 (1378.93)	15,000 (1034.20)	60,000 (4136.85)	60,000 (4136.85)	60,000 (4136.85)	15,000 (1034.20)	15,000 (1034.20)	15,000 (1034.20)	10,000 (689.45)	10,000 (689.45)
20MFAJ4M12	20MFAJ4M16		20MFAJ4H4	20MFAJ4H6	20MFAJ4H9	15MFAJ4P4		15MFAJ4P8		
20MFAJ6M12	20MFAJ6M16			20MFAJ6H6		15MFAJ6P4				
20MFAJ8M12	20MFAJ8M16									
15MFAJ12M12	15MFAJ12M16									
15MFAJ16M12	15MFAJ16M16									
		15MFAJ16M24								

Parker AE Male/Female Adapters are available in a "one-piece" design. They are identical to the two piece designs in length and can be ordered by adding the suffix - OP to the two piece adapter part numbers listed.

For prompt service, Parker Autoclave Engineers stocks select products. Consult factory.

Adapters/Couplings - Male/Female JIC Adapters

Male End Fits this Connection	Female End	Catalog Number	Dimension inches (mm)	
			A Hex	B
JIC to JIC				
3/8" JIC	3/8" JIC	20MFAJ6J6	1.00 (25.4)	1.63 (41.4)
3/4" JIC	1/4" JIC	15MFAJ12J4	1.38 (35.0)	1.69 (42.9)
JIC to Medium Pressure				
1/4" JIC	SF250CX	20MFAJ4M4	0.63 (15.9)	1.25 (31.8)
1/4" JIC	SF375CX	20MFAJ4M6	0.75 (19.1)	1.50 (38.1)
1/4" JIC	SF562CX	20MFAJ4M9	1.00 (25.4)	1.88 (47.8)
1/4" JIC	SF750CX	20MFAJ4M12	1.38 (35.1)	2.13 (54.0)
1/4" JIC	SF1000CX	20MFAJ4M16	1.75 (44.5)	2.75 (69.9)
3/8" JIC	SF250CX	20MFAJ6M4	0.63 (15.9)	1.25 (31.8)
3/8" JIC	SF375CX	20MFAJ6M6	0.75 (19.1)	1.44 (36.5)
3/8" JIC	SF562CX	20MFAJ6M9	1.00 (25.4)	1.88 (47.8)
3/8" JIC	SF750CX	20MFAJ6M12	1.38 (35.1)	2.13 (54.0)
3/8" JIC	SF1000CX	20MFAJ6M16	1.75 (44.5)	2.62 (66.5)
1/2" JIC	SF250CX	20MFAJ8M4	0.81 (20.6)	1.63 (41.3)
1/2" JIC	SF375CX	20MFAJ8M6	0.81 (20.6)	1.75 (44.5)
1/2" JIC	SF562CX	20MFAJ8M9	1.00 (25.4)	1.88 (47.8)
1/2" JIC	SF750CX	20MFAJ8M12	1.38 (35.1)	2.25 (57.2)
1/2" JIC	SF1000CX	20MFAJ8M16	1.75 (44.5)	2.75 (69.9)
5/8" JIC	SF375CX	15MFAJ10M6	1.19 (30.2)	1.50 (38.1)
5/8" JIC	SF562CX	15MFAJ10M9	1.19 (30.2)	1.69 (42.9)
3/4" JIC	SF250CX	15MFAJ12M4	1.38 (35.1)	2.00 (50.8)
3/4" JIC	SF375CX	15MFAJ12M6	1.38 (35.1)	2.00 (50.8)
3/4" JIC	SF562CX	15MFAJ12M9	1.38 (35.1)	2.00 (50.8)
3/4" JIC	SF750CX	15MFAJ12M12	1.38 (35.1)	2.25 (57.2)
3/4" JIC	SF1000CX	15MFAJ12M16	1.75 (44.5)	3.25 (82.6)
1" JIC	SF250CX	15MFAJ16M4	1.50 (38.1)	2.00 (50.8)
1" JIC	SF375CX	15MFAJ16M6	1.50 (38.1)	2.00 (50.8)
1" JIC	SF562CX	15MFAJ16M9	1.50 (38.1)	2.25 (57.2)
1" JIC	SF750CX	15MFAJ16M12	1.38 (35.1)	2.62 (66.5)
1" JIC	SF1000CX	15MFAJ16M16	1.75 (44.5)	3.25 (82.6)
1" JIC	SF1500CX	15MFAJ16M24	2.50 (63.5)	3.63 (92.2)

JIC to High Pressure				
1/4" JIC	SF250C	20MFAJ4H4	0.75 (19.1)	1.38 (35.1)
1/4" JIC	SF375C	20MFAJ4H6	1.00 (25.4)	1.50 (38.1)
1/4" JIC	SF562C	20MFAJ4H9	1.38 (35.1)	2.00 (50.8)
3/8" JIC	SF375C	20MFAJ6H6	1.00 (25.4)	1.50 (38.1)
JIC to NPT				
1/4" JIC	1/4" NPT	15MFAJ4P4	0.94 (23.8)	1.50 (38.1)
1/4" JIC	1/2" NPT	15MFAJ4P8	1.19 (30.1)	1.88 (47.8)
3/8" JIC	1/4" NPT	15MFAJ6P4	0.81 (20.6)	1.50 (38.1)
Medium Pressure to JIC				
SF250CX	1/4" JIC	20MFAM4J4	0.75 (19.1)	1.56 (39.7)
SF250CX	3/8" JIC	20MFAM4J6	0.81 (20.6)	1.50 (38.1)
SF375CX	1/4" JIC	20MFAM6J4	0.75 (19.1)	1.50 (38.1)
SF375CX	3/8" JIC	20MFAM6J6	0.81 (20.6)	1.75 (44.5)
SF375CX	1/2" JIC	20MFAM6J8	1.00 (25.4)	1.75 (44.5)
SF562CX	3/8" JIC	20MFAM9J6	1.00 (25.4)	1.75 (44.5)
SF562CX	5/8" JIC	20MFAM9J10	1.19 (30.2)	2.16 (54.8)
SF750CX	1/4" JIC	20MFAJ12J4	1.19 (30.1)	2.00 (50.8)
High Pressure to JIC				
F250C	1/4" JIC	20MFAH4J4	0.75 (19.1)	1.50 (38.1)
F562C	3/4" JIC	20MFAH9J12	1.38 (35.0)	2.10 (53.3)
NPT to JIC				
1/4" NPT	3/8" JIC	15MFAP4J6	0.81 (20.6)	1.50 (38.1)
3/8" NPT	3/8" JIC	15MFAP6J6	0.81 (20.6)	1.50 (38.1)

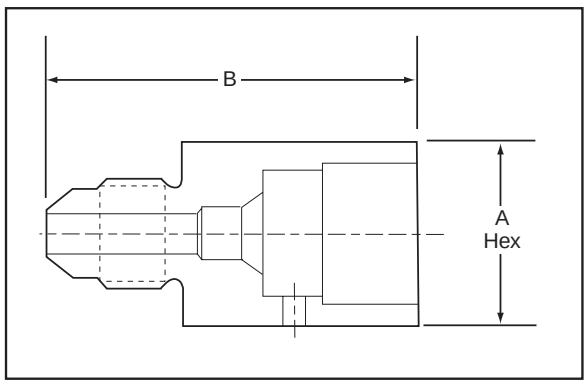

All general terms and conditions of sale, including limitations of our liability, apply to all products and services sold.

Adapters/Couplings - EZ-Union Adapters

Parker Autoclave Engineers offers an EZ-Union adapter providing a fast and simple way to install or remove components from a pressure system. The face seal o-ring design provides a positive seal with easy and reliable operation. EZ-Union adapters can be provided with any standard or special connection combination. Optional materials available upon request. Contact your local Sales Representative for optional information and sizes not shown. The following tables show the standard adapters with dimensions.

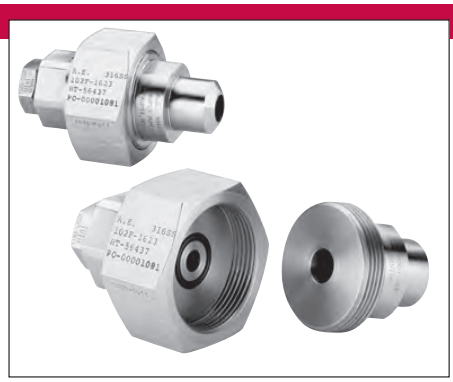

EZ-Union Adapter

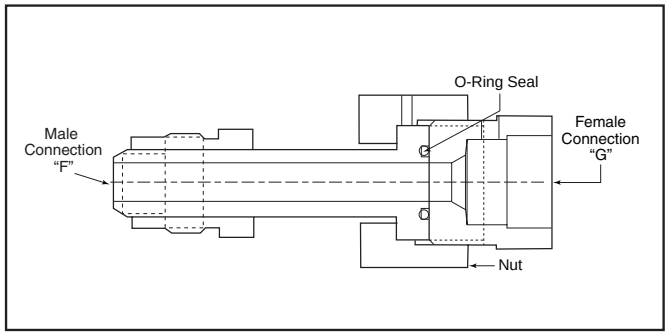

Ordering Procedure

Typical catalog number: 20 EZ M4 M4

20	EZ	M4	M4
Pressure (X 1000 psi)	EZ- Male to Female EZMA- Male to Male	"F"	"G"

Available End Connections

For Butt-Weld or specials contact factory.

When ordering Male to Female adapters, Male connection is listed first.

M4 - 1/4" Medium Pressure	**H4** - 1/4" High Pressure	**P4** - 1/4" NPT
M6 - 3/8" Medium Pressure	**H6** - 3/8" High Pressure	**P6** - 3/8" NPT
M9 - 9/16" Medium Pressure	**H9** - 9/16" High Pressure	**P8** - 1/2" NPT
M12 - 3/4" Medium Pressure		**P12** - 3/4" NPT
M16 - 1" Medium Pressure		**P16** - 1" NPT

Note: Special material EZ-Unions may be supplied with four flats in place of standard hex.

All general terms and conditions of sale, including limitations of our liability, apply to all products and services sold.

EZ-Union Male to Female Adapters

Catalog Number	Male "F" Connection	Female "G" Connection	Pressure Rating psi (bar)	Dimension inches (mm)				
				A	B	C Hex	D Hex	E Min Opening
20EZM4M4	SM250CX20	SF250CX20	20,000 (1379)	3.13 (79.50)	1.00 (25.40)	1.00 (25.40)	0.81 (20.57)	0.11 (2.77)
15EZM4P4	SM250CX20	1/4" NPT	15,000 (1034)	3.13 (79.50)	1.00 (25.40)	1.00 (25.40)	0.81 (20.57)	0.08 (2.03)
10EZM9M9	SM562CX20	SF562CX20	10,000 (690)	4.63 (117.60)	1.63 (41.40)	1.75 (44.45)	1.38 (34.93)	0.31 (7.92)
10EZM9P6	SM562CX20	3/8" NPT	10,000 (690)	4.63 (117.60)	1.63 (41.40)	1.75 (44.45)	1.38 (34.93)	0.31 (7.92)
20EZM9M9	SM562CX20	SF562CX20	20,000 (1379)	4.88 (123.95)	1.88 (47.75)	1.75 (44.45)	1.38 (34.93)	0.31 (7.92)
10EZM12M12	SM750CX20	SF750CX20	10,000 (690)	4.63 (117.60)	1.38 (35.05)	1.75 (44.45)	1.50 (38.10)	0.44 (11.13)
10EZM16M16	SM1000CX20	SF1000CX20	10,000 (690)	6.44 (163.58)	2.31 (58.67)	1.75 (44.45)	1.75 (44.45)	0.56 (14.27)
10EZP12M12	3/4" NPT	SF750CX20	10,000 (690)	4.63 (117.60)	1.38 (35.05)	1.75 (44.45)	1.50 (38.10)	0.44 (11.13)
10EZM16P8	SM1000CX20	1/2" NPT	10,000 (690)	5.38 (136.65)	1.25 (31.75)	1.75 (44.45)	1.38 (35.05)	0.56 (14.27)
20EZH4H4	M250C	F250C	20,000 (1379)	3.38 (85.85)	1.00 (25.40)	1.00 (25.40)	0.81 (20.57)	0.08 (2.03)
20EZH9H9	M562C	F562C	20,000 (1379)	5.95 (151.13)	1.50 (38.10)	1.75 (44.45)	1.38 (34.93)	0.19 (48.26)

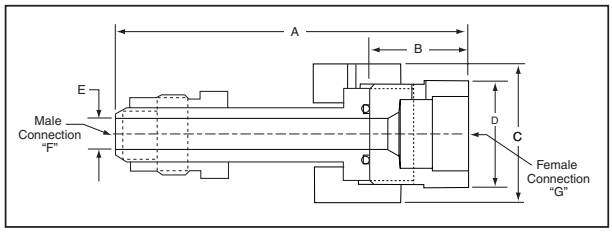

Pipe Male to Female Adapters

Catalog Number	Male "F" Connection	Female "G" Connection	Pressure Rating psi (bar)	Dimension inches (mm)				
				A	B	C Hex	D Hex	E Min Opening
10EZP4P4	1/4" MNPT	1/4" FNPT	10,000 (690)	4.00 (101.60)	1.25 (31.75)	1.75 (44.45)	1.38 (34.93)	.31 (7.87)
15EZP8P8	1/2" MNPT	1/2" FNPT	15,000 (1034)	4.25 (107.95)	1.25 (31.75)	1.75 (44.45)	1.38 (34.93)	.31 (7.87)
10EZP16P16	1" MNPT	1" FNPT	10,000 (690)	6.25 (158.75)	2.50 (63.50)	2.25 (57.15)	1.75 (44.45)	.56 (14.22)

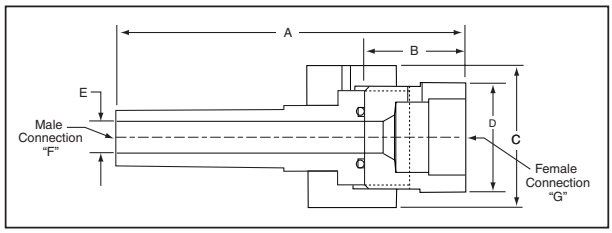

EZ-Union Male to Male Adapters

Catalog Number	Male "F" Connection	Male "G" Connection	Pressure Rating psi (bar)	Dimension inches (mm)				
				A	B	C Hex	D Hex	E Min Opening
20EZMAH4H6	M250C	M375C	20,000 (1379)	5.94 (150.88)	3.56 (90.42)	1.00 (25.40)	0.81 (20.57)	0.09 (2.29)
10EZMAP12M12	SM750CX20	3/4" NPT	10,000 (690)	6.50 (165.10)	3.25 (82.55)	1.75 (44.45)	0.87 (22.05)*	0.44 (11.13)

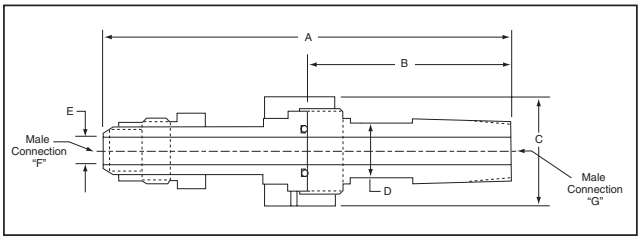

Note1: EZ-Unions are constructed from 316 SS and are supplied with a Viton o-ring as standard.
Note 2: Gland and collar supplied with medium and high pressure connections.

Maximum pressure rating is based on the lowest rating of any component.
Actual working pressure may be determined by tubing pressure rating, if lower.

Note: For pressure rating see ordering procedure.
All Dimensions for reference only and subject to change. For prompt service, Parker Autoclave Engineers stocks select products. Consult factory.

*across flats

All general terms and conditions of sale, including limitations of our liability, apply to all products and services sold.

Adapters/Couplings - Butt-Weld Adapters

Parker Autoclave Engineer's Butt-Weld adapters are available in a number of configurations. The following tables show models for all three pressure ranges. Models not shown and special material adapters are available upon request. Contact your local Sales Representative for more information.

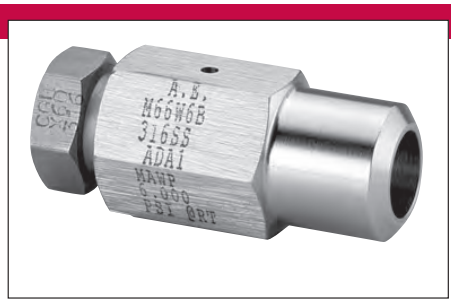

Butt-Weld Adapter

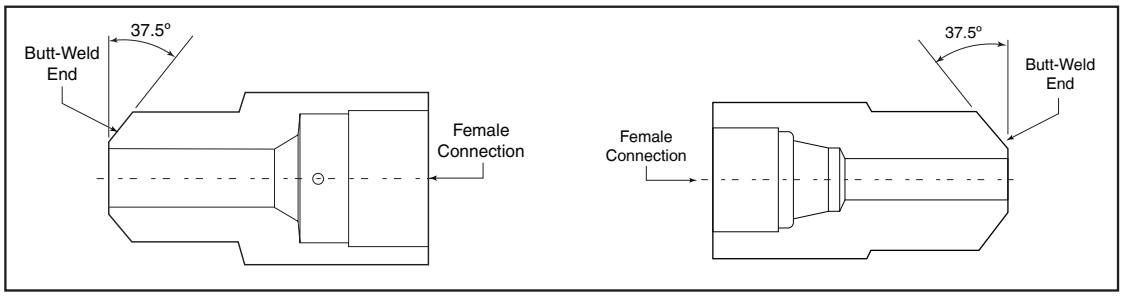

Note: Standard Butt-weld adapters made from 316 SS.

Butt-Weld Adapters

Weld Connection Type	Size/Schedule	AE Low Pressure - Female Connection				
		SW250	SW375	SW500		
Pipe Butt-Weld	1/2" / XXS		M86W2B-XXS			
Pipe Butt-Weld	3/4" / XXS			M128W2B-XXS		

Weld Connection Type	Size/Schedule	AE Medium Pressure - Female Connection					
		SF250CX	SF375CX	SF562CX	SF750CX	SF1000CX	SF1500CX
Pipe Butt-Weld	1/8" / 80	M24W6B-XS	M26W6B-XS				
Pipe Butt-Weld	1/4" / 80	M44W6B-XS	M46W6B-XS	M49W6B-XS			
Pipe Butt-Weld	3/8" / 80	M64W6B-XS	M66W6B-XS	M69W6B-XS	M612W6B-XS		
Pipe Butt-Weld	1/2" / 80	M84W6B-XS		M89W6B-XS			
Pipe Butt-Weld	1/2" / XXS			M89W6B-XXS	M812W6B-XXS	M816W6B-XXS	
Pipe Butt-Weld	3/4" / 80			M129W6B-XS			
Pipe Butt-Weld	3/4" / 160			M129W6B-160			
Pipe Butt-Weld	3/4" / XXS			M129W6B-XXS	M1212W6B-XXS	M1216W6B-XXS	
Pipe Butt-Weld	1" / XXS					M1616W6B-XXS	
Pipe Butt-Weld	1-1/2" / 160						M2416W6B-160
Pipe Butt-Weld	1-1/2" / XS						M2424W6B-XS
Pipe Butt-Weld	1-1/2" / XXS						M2424W6B-XXS

Weld Connection Type	Size/Schedule	AE High Pressure - Female Connection				
		F250C	F375C	F562C	F562C40	SF1000CX43
Pipe Butt-Weld	1" / XXS			M169W3B-XXS		

All general terms and conditions of sale, including limitations of our liability, apply to all products and services sold.

Butt-Weld to Low-Pressure

Catalog Number	Male BW	Female LP	Pressure Rating		Dimension inches (mm)		
			psi	bar	A Hex	B	C
M86W2B-XXS	1/2"	SW375	10,000	689.5	0.94 (23.87)	1.75 (44.45)	0.81 (20.57)
M128W2B-XXS	3/4"	SW500	10,000	689.5	1.19 (30.23)	2.00 (50.80)	0.81 (20.57)

Butt-Weld to Medium-Pressure

Catalog Number	Male BW	Female M/P	Pressure Rating		Dimension inches (mm)		
			psi	bar	A Hex	B	C
M24W6B-XS	1/8"	SF250CX	8500	586.0	0.63 (15.88)	1.00 (25.40)	0.38 (9.53)
M26W6B-XS	1/8"	SF375CX	8500	586.0	0.75 (19.05)	1.31 (33.32)	0.38 (9.53)
M44W6B-XS	1/4"	SF250CX	8000	551.6	0.63 (15.88)	1.18 (29.97)	0.56 (14.27)
M46W6B-XS	1/4"	SF375CX	8000	551.6	0.75 (19.05)	1.50 (38.10)	0.56 (14.27)
M49W6B-XS	1/4"	SF562CX	8000	551.6	1.00 (25.40)	1.56 (39.67)	0.56 (14.27)
M64W6B-XS	3/8"	SF250CX	6500	448.2	0.75 (19.05)	1.25 (31.75)	0.63 (15.88)
M66W6B-XS	3/8"	SF375CX	6500	448.2	0.75 (19.05)	1.56 (39.67)	0.63 (15.88)
M69W6B-XS	3/8"	SF562CX	6500	448.2	1.00 (25.40)	1.63 (41.28)	0.63 (15.88)
M612W6B-XS	3/8"	SF750CX	6500	448.2	1.38 (34.93)	1.94 (49.20)	0.63 (15.88)
M84W6B-XS	1/2"	SF250CX	6000	413.7	1.00 (25.40)	1.38 (34.93)	0.81 (20.57)
M86W6B-XXS	1/2"	SF375CX	13000	896.3	1.00 (25.40)	1.75 (44.45)	0.81 (20.57)
M89W6B-XS	1/2"	SF562CX	6000	413.7	1.00 (25.40)	1.81 (45.97)	0.81 (20.57)
M89W6B-XXS	1/2"	SF562CX	10000	689.5	1.00 (25.40)	1.81 (45.97)	0.81 (20.57)
M812W6B-XXS	1/2"	SF750CX	10000	689.5	1.38 (34.93)	2.13 (53.98)	0.81 (20.57)
M816W6B-XXS	1/2"	SF1000CX	10000	689.5	1.75 (44.45)	2.81 (71.37)	0.81 (20.57)
M129W6B-XS	3/4"	SF562CX	5000	344.7	1.19 (30.23)	1.81 (45.97)	0.81 (20.57)
M129W6B-160	3/4"	SF562CX	7500	517.1	1.19 (30.23)	2.00 (50.80)	0.81 (20.57)
M129W6B-XXS	3/4"	SF562CX	10000	689.5	1.19 (30.23)	2.00 (50.80)	0.81 (20.57)
M1212W6B-XXS	3/4"	SF750CX	10000	689.5	1.38 (34.93)	2.06 (52.32)	0.81 (20.57)
M1216W6B-XXS	3/4"	SF1000CX	10000	689.5	1.75 (44.45)	2.69 (68.25)	0.81 (20.57)
M1616W6B-XXS	1"	SF1000CX	10000	689.5	1.75 (44.45)	3.25 (82.55)	1.31 (33.32)
M2416W6B-160	1-1/2"	SF1000CX	6000	413.7	2.25 (57.15)	3.50 (88.90)	1.31 (33.32)
M2424W6B-XS	1-1/2"	SF1500CX	3300	227.5	2.25 (57.15)	3.50 (88.90)	1.31 (33.32)
M2424W6B-XXS	1-1/2"	SF1500CX	7500	517.1	2.25 (57.15)	3.50 (88.90)	1.31 (33.32)

Butt-Weld to High-Pressure

Catalog Number	Male BW	Female LP	Pressure Rating		Dimension inches (mm)		
			psi	bar	A Hex	B	C
M169W3B-XXS	1"	F562C	10000	689.5	1.38 (34.93)	2.44 (61.90)	1.22 (30.99)

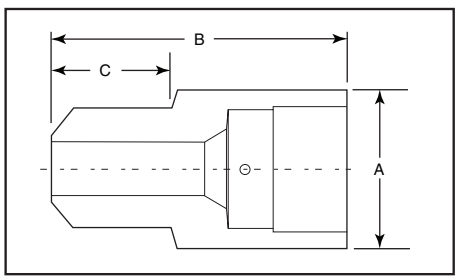

Gland and collar supplied with high pressure connections.

Maximum pressure rating is based on the lowest rating of any component.
Actual working pressure may be determined by piping pressure rating, contact factory.

Note: For pressure rating see ordering procedure.
All Dimensions for reference only and are subject to change.

For prompt service, Parker Autoclave Engineers stocks select products. Consult factory.

All general terms and conditions of sale, including limitations of our liability, apply to all products and services sold.

Adapters/Couplings - Header Couplings

Parker Autoclave Engineer's offers weld style Header Couplings in a number of designs and materials. The standard materials are SAE-4130 and Inconel 625. Other materials are listed in the tables. Header couplings are available drilled through or blind drilled, allowing final drill through after welding. The couplings can be supplied with any style of Parker Autoclave Engineers connection or special connections if required. Header couplings come standard with 316 SS glands and collars for our medium and high-pressure connections. Models not shown are available upon request. Contact your local sales representative.



Header Coupling

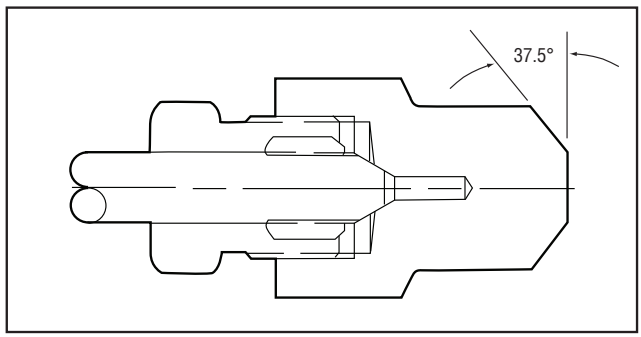

Ordering Procedure

Typical catalog number: HC F M16 W 625 DT

HC	F	M16	W	625	Option DT
Header Coupling	Female Connection	Available End Connections	Welded		Drilled Through

625

SAE 4130 - 4130
Inconel 625 - 625
2205 Duplex - 2205
316 SS - 316
A105 - 105
A105N - 105 Normalized

M16

M4 - 1/4" Medium Pressure
M6 - 3/8" Medium Pressure
M9 - 9/16" Medium Pressure
M12 - 3/4" Medium Pressure
M16 - 1" Medium Pressure

H4 - 1/4" High Pressure
H6 - 3/8" High Pressure
H9 - 9/16" High Pressure

P4 - 1/4" NPT
P6 - 3/8" NPT
P8 - 1/2" NPT
P12 - 3/4" NPT
P16 - 1" NPT

All general terms and conditions of sale, including limitations of our liability, apply to all products and services sold.

Female Medium-Pressure Header Coupling Blind End

Catalog Number	Material	Pressure psi (bar)	Female M/P	Dimension inches (mm)				
				A Flats	B	C	D	E
HCFM12W316	316 SS	10,000 (690)	SF750CX20	1.75 (44.45)	3.00 (76.2)	1.05 (26.7)	1.32 (33.5)	0.44 (11.2)
HCFM12W105	SA-105	10,000 (690)	SF750CX20	1.75 (44.45)	3.00 (76.2)	1.05 (26.7)	1.32 (33.5)	0.44 (11.2)
HCFM12W4130	SAE-4130	20,000 (1379)	SF750CX20	1.75 (44.45)	3.00 (76.2)	1.05 (26.7)	1.32 (33.5)	0.44 (11.2)
HCFM12W2205	2205 Duplex	15,000 (1034)	SF750CX20	1.75 (44.45)	3.00 (76.2)	1.05 (26.7)	1.32 (33.5)	0.44 (11.2)
HCFM16W316	316 SS	10,000 (690)	SF1000CX20	1.75 (44.45)	2.62 (66.55)	1.00 (25.40)	1.38 (34.93)	0.56 (14.27)
HCFM16W2205	2205 Duplex	15,000 (1034)	SF1000CX20	1.75 (44.45)	3.00 (76.2)	1.05 (26.7)	1.31 (33.27)	0.56 (14.27)

Female High-Pressure Header Coupling Blind End

Catalog Number	Material	Pressure psi (bar)	Female H/P	Dimension inches (mm)				
				A Flats	B	C	D	E
HCFH9W316	316SS	30,000 (2068)	F562C	1.50 (38.10)	2.31 (58.67)	1.19 (30.18)	1.31 (33.27)	0.19 (4.75)
HCFH9W4130	SAE-4130	30,000 (2068)	F562C	1.50 (38.10)	2.31 (58.67)	1.19 (30.18)	1.31 (33.27)	0.19 (4.75)
HCFH9W625	Inconel 625	30,000 (2068)	F562C	1.50 (38.10)	2.31 (58.67)	1.19 (30.18)	1.31 (33.27)	0.19 (4.75)
HCFH16W4130	SAE-4130	20,000 (1379)	F1000C43	1.75 (44.45)	3.00 (76.20)	1.05 (26.59)	1.32 (33.53)	0.44 (11.10)
HCFH16W625	Inconel 625	22,000 (1551)	F1000C43	1.75 (44.45)	3.00 (76.20)	1.05 (26.59)	1.32 (33.53)	0.44 (11.10)

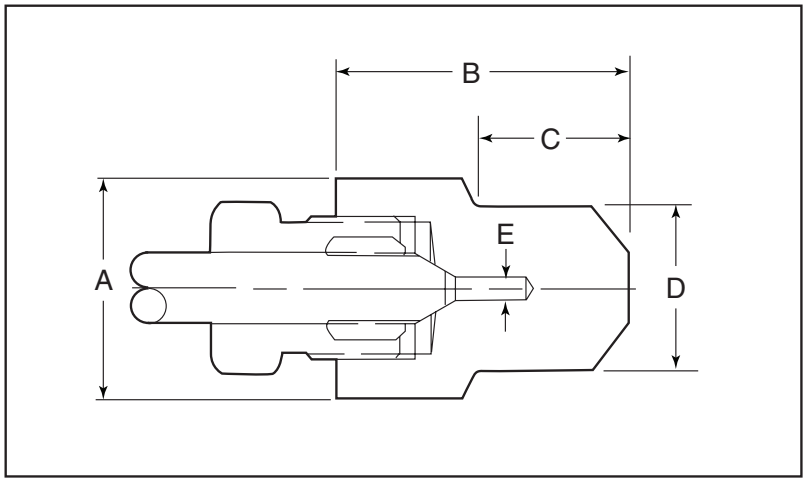

Gland and collar supplied with high pressure connections.

Maximum pressure rating is based on the lowest rating of any component.
Actual working pressure may be determined by tubing pressure rating, if lower.

All Dimensions for reference only and are subject to change.

For prompt service, Parker Autoclave Engineers stocks select products. Consult factory.

All general terms and conditions of sale, including limitations of our liability, apply to all products and services sold.

Female Medium-Pressure Header Coupling Drill Through

Catalog Number	Material	Pressure psi (bar)	Female M/P	Dimension inches (mm)				
				A Flats	B	C	D	E
HCFM4W316DT	316 SS	10,000 (690)	SF250CX20	0.63 (16.0)*	1.19 (30.2)	0.56 (14.3)	0.54 (13.6)	0.11 (2.8)
HCFM9W316DT	316 SS	10,000 (690)	SF562CX20	1.38 (35.1)*	2.44 (62.0)	1.13 (28.6)	1.32 (33.5)	0.36 (9.1)
HCFM12W4130DT	SAE-4130	20,000 (1379)	SF750CX	1.38 (35.1)	2.63 (66.68)	1.05 (26.7)	1.32 (33.5)	0.44 (11.2)
HCFM12W2205DT	2205 duplex	15,000 (1034)	SF750CX20	1.75 (44.45)	3.00 (76.20)	1.05 (26.7)	1.32 (33.5)	0.44 (11.2)
HCFM16W316DT	316 SS	10,000 (690)	SF1000CX20	1.75 (44.45)	3.00 (76.20)	1.05 (26.7)	1.32 (33.5)	0.56 (14.2)
HCFM16W316LDT	316L SS	10,000 (690)	SF1000CX20	1.75 (44.45)	3.00 (76.20)	1.05 (26.7)	1.32 (33.5)	0.56 (14.2)
HCFM16W4130DT	SAE-4130	20,000 (1379)	SF1000CX20	1.75 (44.45)	3.00 (76.20)	1.05 (26.7)	1.32 (33.5)	0.56 (14.2)
HCFM16W105DT	SA-105	12,000 (827)	SF1000CX20	1.75 (44.45)	3.00 (76.20)	1.05 (26.7)	1.32 (33.5)	0.56 (14.2)
HCFM16W2205DT	2205 duplex	15,000 (1034)	SF1000CX20	1.75 (44.45)	3.00 (76.20)	1.05 (26.7)	1.32 (33.5)	0.56 (14.2)
HCFM16W625DT	Inconel 625	15,000 (1034)	SF1000CX20	1.75 (44.45)	3.00 (76.20)	1.05 (26.7)	1.32 (33.5)	0.56 (14.2)

*across hex

Female High-Pressure Header Coupling Drill Through

Catalog Number	Material	Pressure psi (bar)	Female H/P	Dimension inches (mm)				
				A Flats	B	C	D	E
HCFH9W316DT	316SS	30,000 (2068)	F562C	1.50 (38.10)	2.31 (58.67)	1.19 (30.18)	1.31 (33.27)	0.19 (4.75)
HCFH9W4130DT	SAE-4130	30,000 (2068)	F562C	1.50 (38.10)	2.31 (58.67)	1.19 (30.18)	1.31 (33.27)	0.19 (4.75)
HCFH9W625DT	Inconel 625	30,000 (2068)	F562C	1.50 (38.10)	2.31 (58.67)	1.19 (30.18)	1.31 (33.27)	0.19 (4.75)
HCFH16W4130DT	SAE-4130	20,000 (1379)	F1000C43	1.75 (44.45)	3.00 (76.20)	1.05 (26.59)	1.32 (33.53)	0.44 (11.10)
HCFH16W625DT	Inconel 625	22,000 (1551)	F1000C43	1.75 (44.45)	3.00 (76.20)	1.05 (26.59)	1.32 (33.53)	0.44 (11.10)

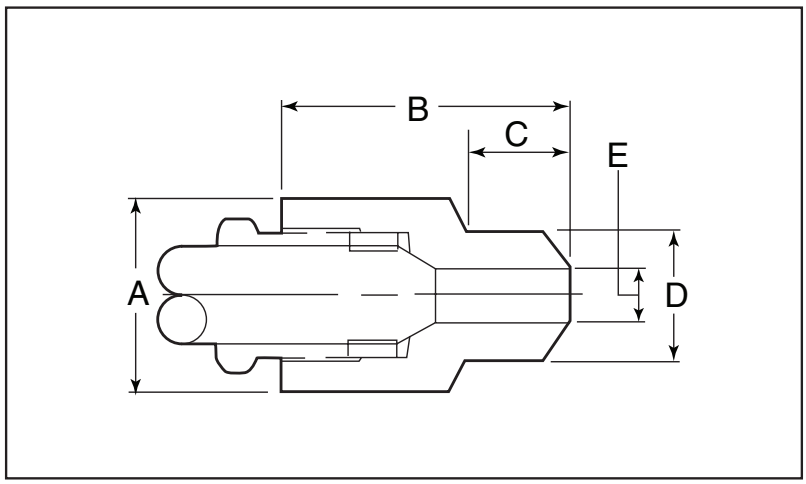

Gland and collar supplied with high pressure adapters.

Maximum pressure rating is based on the lowest rating of any component.
Actual working pressure may be determined by tubing pressure rating, if lower.

Note: For pressure rating see ordering procedure.

All Dimensions for reference only and are subject to change.

For prompt service, Parker Autoclave Engineers stocks select products. Consult factory.

All general terms and conditions of sale, including limitations of our liability, apply to all products and services sold.

Adapters/Couplings - Bulkhead Adapters

Parker Autoclave Engineers bulkhead adapters are used to connect tubing or piping of different sizes and configurations through the panel. Bulkhead adapters are machined from cold worked stainless steel. Other material and connections are available. Contact your local Sales Repersentative for optional information.



Bulkhead Adapter

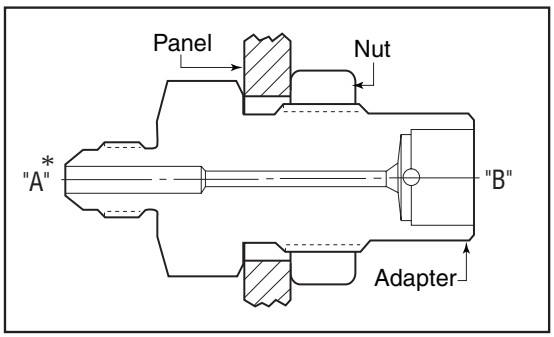

Ordering Procedure

Typical catalog number: 20 BA M J16* F H4

20	BA	M	J16	F	H4
Pressure (X 1000 psi)	Bulkhead Adapter	*Male Female	Connection	Female Male	Connection

Available End Connections

*Note: First connection designation is "A" side.

J4 - 1/4" JIC	**L4** - 1/4" Low Pressure	**M4** - 1/4" Medium Pressure	**H4** - 1/4" High Pressure	**P4** - 1/4" NPT
J6 - 3/8" JIC	**L6** - 3/8" Low Pressure	**M6** - 3/8" Medium Pressure	**H6** - 3/8" High Pressure	**P6** - 3/8" NPT
J8 - 1/2" JIC	**L8** - 1/2" Low Pressure	**M9** - 9/16" Medium Pressure	**H9** - 9/16" High Pressure	**P8** - 1/2" NPT
J10 - 5/8" JIC		**M12** - 3/4" Medium Pressure	**RH9** - 9/16" Reverse High Pressure	
J12 - 3/4" JIC		**M16** - 1" Medium Pressure	**RH12** - 3/4" Reverse High Pressure	
J16 - 1" JIC			**RH16** - 1" Reverse High Pressure	

Note: Special material adapters may be supplied with four flats in place of standard hex. RH or "Reverse High Pressure" Connection is also know a "Type "M" Male Connection"

All general terms and conditions of sale, including limitations of our liability, apply to all products and services sold.

Male to Female ("A" Side Male)

Reverse High Pressure (Type "M" Male) to Medium-Pressure

Male Connection R/H	AE Medium Pressure - Female Connection				
	SF250CX	SF375CX	SF562CX	SF750CX	SF1000CX
9/16"	20BAMRH9FM4	20BAMRH9FM6	20BAMRH9FM9		
3/4"			20BAMRH12FM9		20BAMRH12FM16
1"					20BAMRH16FM16

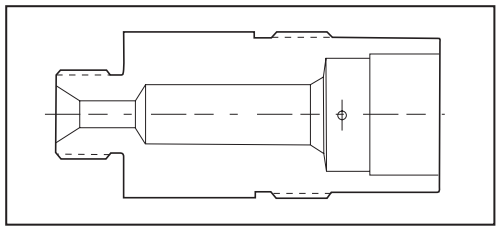

Reverse High Pressure (Type "M" Male) to High Pressure

Male Connection R/H	AE High Pressure - Female Connection			
	F250C	F375C	F562C	
9/16"	40BAMRH9FH4		40BAMRH9FH9	
3/4"			30BAMRH12FH9	
1"				

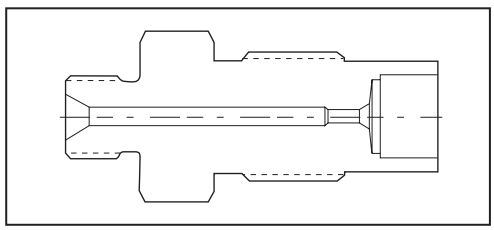

NPT to Medium Pressure

Male Connection NPT	AE Medium Pressure - Female Connection				
	SF250CX	SF375CX	SF562CX	SF750CX	SF1000CX
1/4"	15BAMP4FM4	15BAMP4FM6		15BAMP4M12	
3/8"		15BAMP6FM6		15BAMP6M12	
1/2"		15BAMP8M6	15BAMP8M9		

Gland and collar supplied with adapter.

Maximum pressure rating is based on the lowest rating of any component. Actual working pressure may be determined by tubing pressure rating, if lower.

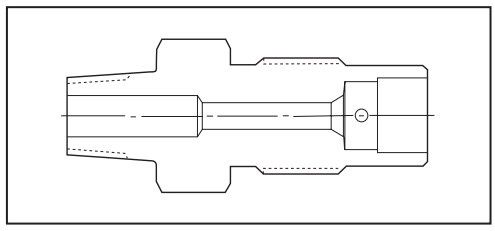

Note: For pressure rating see ordering procedure. *All Dimensions for reference only and are subject to change.*

For prompt service, Parker Autoclave Engineers stocks select products. Consult factory.

All general terms and conditions of sale, including limitations of our liability, apply to all products and services sold.

JIC to Low Pressure

Male Connection JIC	AE Low Pressure - Female Connection				
	SW250	SW375	SW500		
1/4”	15BAMJ4FL4				
3/8”		15BAMJ6FL6			
1/2”					

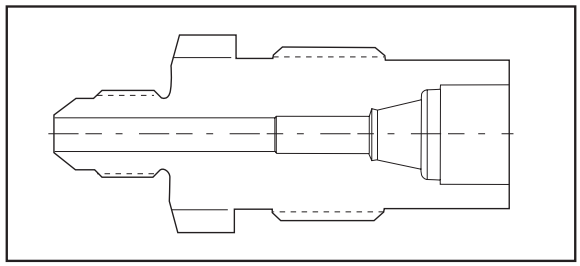

JIC to Medium Pressure

Male Connection JIC	AE Medium Pressure - Female Connection				
	SF250CX	SF375CX	SF562CX	SF750CX	SF1000CX
1/4”	20BAMJ4FM4	20BAMJ4FM6		20BAMJ4FM12	
3/8”	20BAMJ6FM4	20BAMJ6FM6	20BAMJ6FM9	20BAMJ6FM12	
1/2”		20BAMJ8FM6	20BAMJ8FM9	20BAMJ8FM12	20BAMJ8FM16

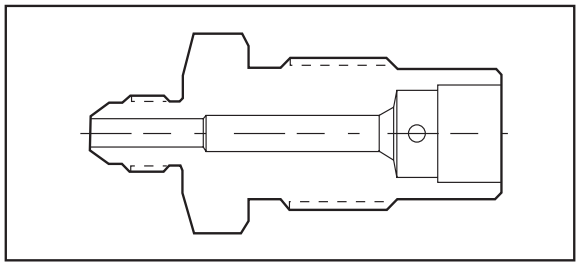

JIC to High Pressure

Male Connection JIC	AE High Pressure - Female Connection				
	F250C	F375C	F562C		
1/4”	20BAMJ4FH4				
3/8”	20BAMJ6H4				
1/2”					
3/4”			15BAMJ12FH9		

Gland and collar supplied with adapter.

Maximum pressure rating is based on the lowest rating of any component. Actual working pressure may be determined by tubing pressure rating, if lower.

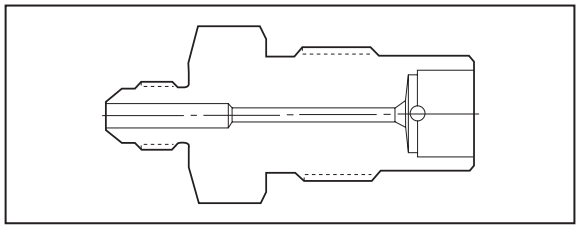

Note: For pressure rating see ordering procedure. *All Dimensions for reference only and are subject to change.*

For prompt service, Parker Autoclave Engineers stocks select products. Consult factory.

All general terms and conditions of sale, including limitations of our liability, apply to all products and services sold.

Reverse High Pressure (Type "M" Male) to Medium Pressure

Catalog Number	Male R/H	Female M/P	Dimension inches (mm)				
			A Panel Hole	B	C	D Max	E Hex
20BAMRH9FM4	9/16”	SF250CX	0.81 (20.62)	2.56 (65.0)	1.22 (31.0)	0.38 (9.65)	1.00 (25.40)
20BAMRH9FM6	9/16”	SF375CX	0.94 (23.88)	2.63 (66.80)	1.13 (28.70)	0.38 (9.65)	1.00 (25.40)
20BAMRH9FM9	9/16”	SF562CX	1.13 (28.58)	3.00 (76.20)	1.28 (32.51)	0.38 (9.65)	1.38 (34.93)
20BAMRH12FM9	3/4”	SF562CX	1.13 (28.58)	3.13 (79.50)	1.41 (35.81)	0.38 (9.65)	1.38 (34.93)
20BAMRH12FM16	3/4”	SF1000CX	1.94 (49.28)	4.26 (108.20)	2.13 (54.10)	0.38 (9.65)	2.13 (54.10)
20BAMRH16FM16	1”	SF1000CX	1.94 (49.28)	4.41 (112.01)	2.28 (57.91)	0.38 (9.65)	2.13 (54.10)

Reverse High Pressure (Type "M" Male) to High Pressure

Catalog Number	Male R/H	Female H/P	Dimension inches (mm)				
			A Panel Hole	B	C	D Max	E Hex
40BAMRH9FH4	9/16”	F250C	0.94 (23.88)	2.50 (63.50)	1.00 (25.40)	0.38 (9.65)	1.00 (25.40)
40BAMRH9FH9	9/16”	F562C	1.69 (42.85)	3.38 (85.85)	1.50 (38.10)	0.38 (9.65)	1.88 (47.75)
30BAMRH12FH9	3/4”	F562C	1.69 (42.85)	3.50 (88.90)	1.62 (41.15)	0.38 (9.65)	1.88 (47.75)

Pipe to Medium Pressure

Catalog Number	Male NPT	Female M/P	Dimension inches (mm)				
			A Panel Hole	B	C	D Max	E Hex
15BAMP4FM4	1/4”	SF250CX	0.81 (20.62)	2.56 (65.02)	1.22 (31.01)	0.38 (9.65)	1.00 (25.40)
15BAMP4FM6	1/4”	SF375CX	0.94 (23.88)	2.69 (68.33)	1.31 (33.35)	0.38 (9.65)	1.00 (25.40)
15BAMP6FM6	3/8”	SF375CX	0.94 (23.88)	2.75 (69.85)	1.25 (31.75)	0.38 (9.65)	1.00 (25.40)
15BAMP4FM12	1/4”	SF750CX	1.68 (42.67)	3.00 (76.20)	1.28 (32.51)	0.38 (9.65)	1.88 (47.75)
15BAMP6FM12	3/8”	SF750CX	1.68 (42.67)	3.00 (76.20)	1.28 (32.51)	0.38 (9.65)	1.88 (47.75)
15BAMP8FM6	1/2”	SF375CX	0.94 (23.88)	2.88 (73.15)	1.50 (38.10)	0.38 (9.65)	1.00 (25.40)
15BAMP8FM6	1/2”	SF562CX	1.30 (33.02)	3.25 (82.55)	1.66 (42.16)	0.38 (9.65)	1.38 (35.05)

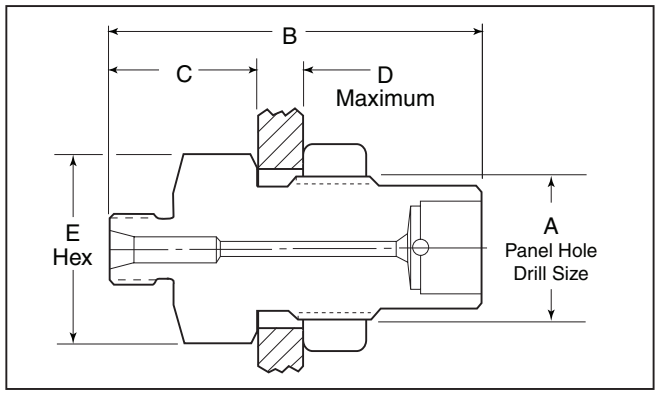

Gland and collar supplied with adapter.

Maximum pressure rating is based on the lowest rating of any component.
Actual working pressure may be determined by tubing pressure rating, if lower.

Note: For pressure rating see ordering procedure.
All Dimensions for reference only and are subject to change.

For prompt service, Parker Autoclave Engineers stocks select products. Consult factory.

All general terms and conditions of sale, including limitations of our liability, apply to all products and services sold.

JIC to Low Pressure

Catalog Number	Male JIC	Female LP	Dimension inches (mm)				
			A Panel Hole	B	C	D Max	E Hex
15BAMJ4FL4	1/4”	SW250	0.94 (23.88)	2.29 (58.04)	0.91 (23.11)	0.38 (9.65)	1.00 (25.40)
15BAMJ6FL6	3/8”	SW375	0.94 (23.88)	2.38 (60.45)	1.00 (25.40)	0.38 (9.65)	1.00 (25.40)

JIC to Medium Pressure

Catalog Number	Male JIC	Female MP	Dimension inches (mm)				
			A Panel Hole	B	C	D Max	E Hex
20BAMJ4FM4	1/4”	SF250CX	0.81 (20.62)	2.25 (57.15)	0.91 (23.11)	0.38 (9.65)	1.00 (25.40)
20BAMJ4FM6	1/4”	SF375CX	0.94 (23.8)	2.44 (61.93)	0.94 (23.88)	0.38 (9.65)	1.00 (25.40)
20BAMJ4FM12	1/4”	SF750CX	1.69 (42.85)	2.94 (74.68)	1.22 (31.0)	0.38 (9.65)	1.88 (47.75)
20BAMJ6FM4	3/8”	SF250CX	0.81 (20.62)	2.25 (57.15)	0.91 (23.11)	0.38 (9.65)	1.00 (25.40)
20BAMJ6FM6	3/8”	SF375CX	0.94 (23.88)	2.44 (61.98)	0.94 (23.88)	0.38 (9.65)	1.00 (25.40)
20BAMJ6FM9	3/8”	SF562CX	1.13 (28.58)	2.75 (69.85)	1.16 (29.46)	0.38 (9.65)	1.38 (34.93)
20BAMJ6FM12	3/8”	SF750CX	1.69 (42.85)	2.94 (74.68)	1.22 (31.0)	0.38 (9.65)	1.88 (47.75)
20BAMJ8FM6	1/2”	SF375CX	0.94 (23.8)	2.53 (64.26)	1.03 (26.16)	0.38 (9.65)	1.00 (25.40)
20BAMJ8FM9	1/2”	SF562CX	1.13 (28.58)	3.00 (76.20)	1.41 (35.69)	0.38 (9.65)	1.38 (34.93)
20BAMJ8FM12	1/2”	SF750CX	1.69 (42.85)	3.13 (79.38)	1.41 (35.69)	0.38 (9.65)	1.88 (47.75)
20BAMJ8FM16	1/2”	SF1000CX	1.94 (49.20)	4.36 (110.72)	2.23 (56.62)	0.50 (12.70)	1.87 (47.50*)
15BAMJ12FM12	3/4”	SF750CX	1.69 (42.92)	3.50 (88.90)	1.78 (45.21)	0.38 (9.65)	1.88 (47.75)
15BAMJ12FM16	3/4”	SF1000CX	1.94 (49.27)	4.56 (115.82)	2.43 (61.72)	0.50 (12.70)	1.88 (47.75*)
15BAMJ16FM16	1”	SF1000CX	1.94 (49.27)	3.50 (88.90)	1.50 (38.10)	0.38 (9.65)	1.88 (47.75*)
15BAMJ16FM24	1”	SF1500CX	2.44 (61.97)	4.75 (120.65)	1.75 (44.45)	0.38 (9.65)	2.50 (63.5)

*Dimension across flats

JIC to High Pressure

Catalog Number	Male JIC	Female HP	Dimension inches (mm)				
			A Panel Hole	B	C	D Max	E Hex
20BAMJ4FH4	1/4”	F250C	0.94 (23.80)	2.44 (61.90)	1.06 (26.97)	0.38 (9.65)	1.00 (25.40)
20BAMJ6FH4	3/8”	F250C	0.94 (23.80)	2.47 (62.74)	1.09 (27.79)	0.38 (9.65)	1.00 (25.40)
15BAMJ12FH9	3/4”	F562C	1.69 (42.92)	3.50 (88.90)	1.75 (27.79)	0.38 (44.45)	1.75 (27.79)

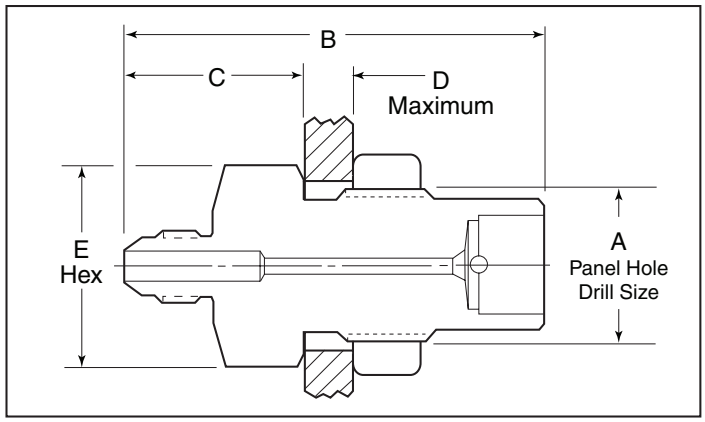

Gland and collar supplied with adapter.

Maximum pressure rating is based on the lowest rating of any component.
Actual working pressure may be determined by tubing pressure rating, if lower.

Note: For pressure rating see ordering procedure.
All Dimensions for reference only and are subject to change.

For prompt service, Parker Autoclave Engineers stocks select products. Consult factory.

All general terms and conditions of sale, including limitations of our liability, apply to all products and services sold.

Female to Female

Medium Pressure to Low Pressure

Female Connection MP	AE Low Pressure - Female Connection				
	W125	SW250	SW375	SW500	
SF250CX		15BAFM4FL4			
SF375CX			15BAFM6FL6		
SF562CX					

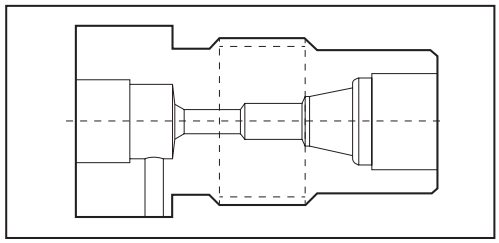

NPT Pipe to Low Pressure

Female Connection NPT	AE Low Pressure - Female Connection				
	W125	SW250	SW375	SW500	
1/4”		15BAFP4FL4			
3/8”			15BAFP6FL6		
1/2”					

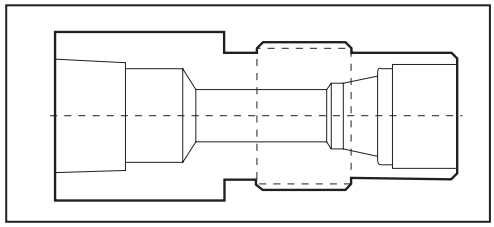

NPT Pipe to Medium Pressure

Female Connection NPT	AE Medium Pressure - Female Connection				
	SF250CX	SF375CX	SF562CX	SF750CX	
1/4”					
3/8”					
1/2”		15BAFP8FM6			

Gland and collar supplied with adapter.

Maximum pressure rating is based on the lowest rating of any component. Actual working pressure may be determined by tubing pressure rating, if lower.

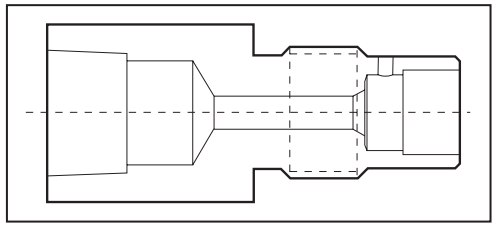

Note: For pressure rating see ordering procedure. *All Dimensions for reference only and are subject to change.*

For prompt service, Parker Autoclave Engineers stocks select products. Consult factory.

All general terms and conditions of sale, including limitations of our liability, apply to all products and services sold.

NPT Pipe to High Pressure

Female Connection NPT	AE High Pressure - Female Connection			
	F250C	F375C	F562C	
1/4”	15BAFP4FH4			
3/8”				
1/2”				

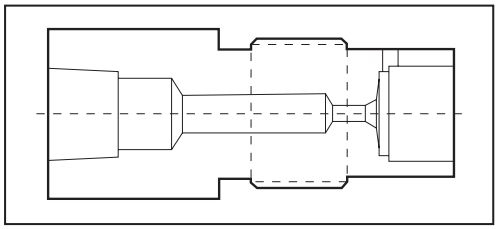

Medium Pressure to NPT

Female Connection MP	NPT Pipe - Female Connection				
	1/4	3/8	1/2	3/4	1
SF250CX	15BAFM4FP4				
SF375CX		15BAFM6FP6			
SF562CX		15BAFM9FP6			

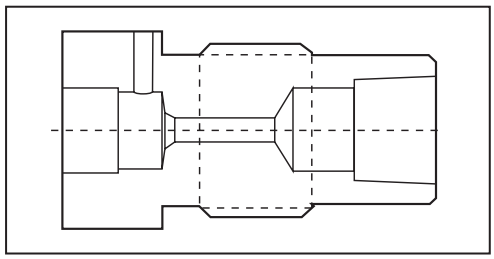

All general terms and conditions of sale, including limitations of our liability, apply to all products and services sold.

Medium Pressure to Low Pressure

Catalog Number	Female MP	Female LP	Dimension inches (mm)				
			A Panel Hole	B	C	D Max	E Hex
15BAFM4FL4	SF250CX	SW250	0.94 (23.87)	1.88 (47.75)	0.50 (12.7)	0.38 (9.65)	1.00 (25.40)
15BAFM6FL6	SF375CX	SW375	0.94 (23.87)	2.00 (50.8)	0.63 (16.0)	0.38 (9.65)	1.00 (25.40)

NPT to Low Pressure

Catalog Number	Female NPT	Female LP	Dimension inches (mm)				
			A Panel Hole	B	C	D Max	E Hex
15BAFP4FL4	1/4"	SW250	0.94 (23.87)	2.38 (60.45)	1.00 (25.40)	0.38 (9.65)	1.00 (25.40)
15BAFP6FL6	3/8"	SW375	0.94 (23.87)	2.38 (60.45)	1.00 (25.40)	0.38 (9.65)	1.00 (25.40)

NPT to Medium Pressure

Catalog Number	Female NPT	Female MP	Dimension inches (mm)				
			A Panel Hole	B	C	D Max	E Hex
15BAFP8FM6	1/2"	SW375CX	0.94 (23.87)	2.75 (69.85)	1.38 (35.05)	0.38 (9.65)	1.19 (30.22)

NPT to High Pressure

Catalog Number	Female NPT	Female HP	Dimension inches (mm)				
			A Panel Hole	B	C	D Max	E Hex
15BAFP4FH6	1/4"	F250C	0.94 (23.87)	2.38 (60.45)	1.00 (25.40)	0.38 (9.65)	1.00 (25.40)

Medium Pressure to NPT

Catalog Number	Female MP	Female LP	Dimension inches (mm)				
			A Panel Hole	B	C	D Max	E Hex
15BAFM4FP4	SF250CX	1/4"	0.94 (23.87)	1.88 (47.75)	0.50 (12.70)	0.38 (9.65)	1.00 (25.40)
15BAFM6FP6	SF375CX	3/8"	1.13 (28.70)	2.25 (57.15)	0.63 (16.00)	0.38 (9.65)	1.38 (35.05)
15BAFM9FP6	SF562CX	3/8"	1.13 (28.70)	2.38 (60.45)	0.79 (20.06)	0.38 (9.65)	1.38 (35.05)

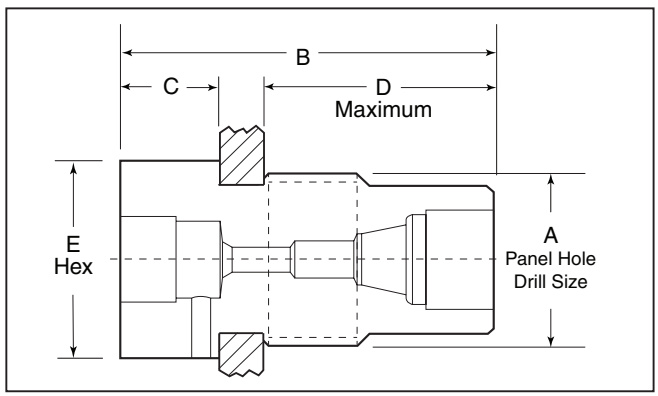

Gland and collar supplied with adapter.

Maximum pressure rating is based on the lowest rating of any component.
Actual working pressure may be determined by tubing pressure rating, if lower.

Note: For pressure rating see ordering procedure.
All Dimensions for reference only and are subject to change.

For prompt service, Parker Autoclave Engineers stocks select products. Consult factory.

All general terms and conditions of sale, including limitations of our liability, apply to all products and services sold.

Female to Male Bulkhead Adapter ("A" Side Female)

Medium Pressure to JIC

Female Connection MP	JIC - Male Connection				
	1/4" JIC	3/8" JIC	1/2" JIC	3/4" JIC	
SF250CX					
SF375CX					
SF562CX					
SF750CX				15BAFM12MJ12	

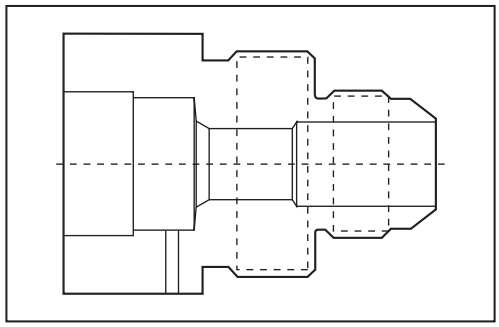

Medium Pressure to JIC

Catalog Number	Female MP	Male JIC	Dimension inches (mm)				
			A Panel Hole	B	C	D Max	E Hex
15BAFM12MJ12	SF750CX	3/4" JIC	1.69 (42.92)	2.67 (67.81)	1.00 (25.40)	0.38 (9.65)	1.88 (47.75)

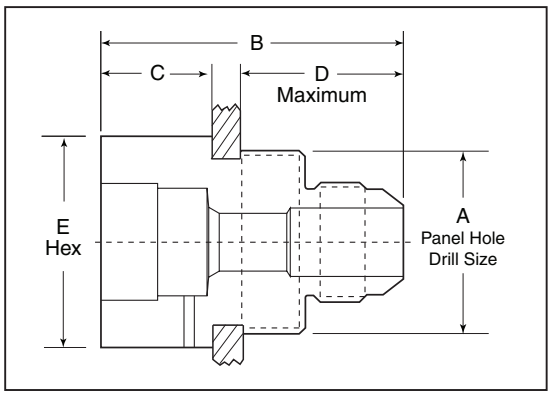

Gland and collar supplied with adapter.

Maximum pressure rating is based on the lowest rating of any component.
Actual working pressure may be determined by tubing pressure rating, if lower.

Note: For pressure rating see ordering procedure.
All Dimensions for reference only and are subject to change.

For prompt service, Parker Autoclave Engineers stocks select products. Consult factory.

All general terms and conditions of sale, including limitations of our liability, apply to all products and services sold.

Adapters/Couplings - SAE O-Ring Adapters

Parker Autoclave Engineers also offers a line of components that assist in adapting into and out of specialized connections with Parker Autoclave Engineers products. Along with the adapters shown, Parker Autoclave Engineers can provide other special adapters to fill your requirements. Contact your local Sales representative for information.

AE Low, Medium and High Medium Pressure (Female) SAE/MS Male

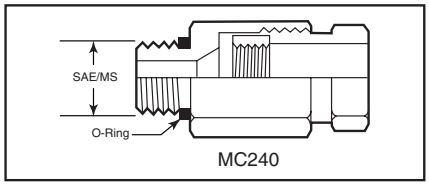

MC240 (SAE/MS Straight thread Boss)

Note: O-rings are standard Buna-N.

10,000 psi (690 bar) operating pressure.

Connection Type	SAE/MS Thread Size (inches)	AE Low Pressure (Female)			
		W125	SW250	SW 375	SW500
MC240 (SAE/MS)	5/16-24				
	7/16-20		M44MC2B	M46MC2B	
	9/16-18				
	3/4-16				

Connection Type	SAE/MS Thread Size (inches)	AE Medium Pressure (Female)				
		SF250CX	SF375CX	SF562CX	SF750CX	SF1000CX
MC240 (SAE/MS)	5/16-24	M24MC6B	M26MC6B			
	7/16-20	M44MC6B	M46MC6B	M49MC6B		
	9/16-18	M64MC6B	M66MC6B	M69MC6B		
	3/4-16		M86MC6B	M89MC6B	M812MC6B	
	7/8-14				M1012MC6B	M1016MC6B
	1-1/16-12		M126MC6B		M1212MC6B	M1216MC6B
	1-5/16-12					M1616MC6B

Connection Type	SAE/MS Thread Size (inches)	AE High Pressure (Female)			
		F250C	F375C	F562C	
MC240 (SAE/MS)	5/16-24				
	7/16-20	M44MC3B	M46MC3B		
	9/16-18	M64MC3B	M66MC3B		
	3/4-16				

For additional information contact your local sales representative.

All general terms and conditions of sale, including limitations of our liability, apply to all products and services sold.

Adapters/Couplings - Female Tube Caps / Gauge Connectors

Tube Caps

Parker Autoclave Engineers offers a line of tube caps used to seal the ends of tubing. Caps are used when pressure testing lengths of tubes or capping off sections of systems for isolation or pressure tests.



Female Tube Caps - Low Pressure

Catalog Number	Connection Type	Outside Diameter Tube-Inches	Pressure Rating psi (bar)*	Dimension inches (mm)	
				A Hex	B
SWTC2	W125	1/8	15000 (1034.20)	0.50 (12.7)	0.63 (15.9)
SWTC4	SW250	1/4	15000 (1034.20)	0.63 (15.9)	1.00 (25.4)
SWTC6	SW375	3/8	15000 (1034.20)	0.75 (19.1)	1.09 (27.8)
SWTC8	SW500	1/2	10000 (689.5)	1.00 (25.4)	1.25 (31.8)

Female Tube Caps - Medium Pressure

Catalog Number	Connection Type	Outside Diameter Tube-Inches	Pressure Rating psi (bar)*	Dimension inches (mm)	
				A Hex	B
20TC4X	SF250CX	1/4	20000 (1378.9)	0.63 (15.9)	0.81 (20.6)
20TC6X	SF375CX	3/8	20000 (1378.9)	0.75 (19.1)	1.13 (28.6)
20TC9X	SF562CX	9/16	20000 (1378.9)	1.00 (25.4)	1.38 (34.9)
20TC12X	SF750CX	3/4	20000 (1378.9)	1.38 (34.9)	1.75 (44.5)
20TC16X	SF1000CX	1	20000 (1378.9)	1.75 (44.5)	2.25 (57.1)
15TC24X	SF1500CX	1-1/2	15000 (1034.2)	2.25 (57.6)	3.00 (76.2)

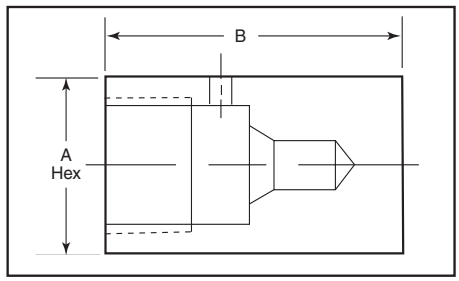

Tube cap configuration may vary from outline shown.

Female Tube Caps - High Pressure Tube Caps

Catalog Number	Connection Type	Outside Diameter Tube-Inches	Pressure Rating psi (bar)*	Dimension inches (mm)	
				A Hex	B
43TC16	F1000C	1	43000 (2964.7)	1.75 (44.5)	2.25 (57.1)
60TC4C	F250C	1/4	60000 (4136.7)	0.75 (19.1)	0.75 (19.1)
60TC6C	F375C	3/8	60000 (4136.7)	1.00 (25.4)	1.13 (28.6)
60TC9C	F562C	9/16	60000 (4136.7)	2.25 (57.1)	1.38 (34.9)
150TC5C	F312C-150	5/16	150,000 (10342)	1.19 (30.1)	2.63 (66.8)

*Maximum pressure rating is based on the lowest rating of any component. Actual working pressure may be determined by tubing pressure rating, if lower.Note: All tube caps are furnished with connection components unless otherwise specified. All dimensions for reference only and subject to change.

For prompt service, Parker Autoclave Engineers stocks select products. Consult factory.

All general terms and conditions of sale, including limitations of our liability, apply to all products and services sold.

Female Tube Caps - JIC

Catalog Number	Connection Type	Outside Diameter Tube-Inches	Pressure Rating psi (bar)	Dimension inches (mm)	
				A Hex	B
20JC4	JIC	1/4	20000 (1378.9)	0.75 (19.1)	1.00 (25.4)
20JC6	JIC	3/8	20000 (1378.9)	0.94 (23.8)	1.13 (28.6)
20JC8	JIC	1/2	20000 (1378.9)	1.19 (30.1)	1.31 (58.6)
15JC16	JIC	1	15000 (1034.2)	1.75 (44.45)	2.00 (50.8)

* Maximum pressure rating must not exceed rating of tubing used.
Note: All tube caps are furnished with connection components unless otherwise specified.
All dimensions for reference only and subject to change.

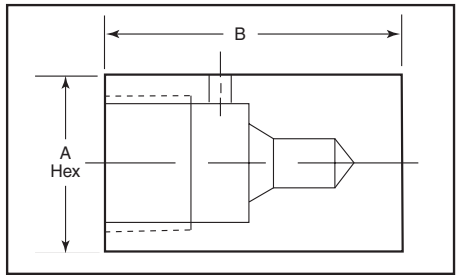

Tube cap configuration may vary from outline shown.

Female Tube Caps Assembly - Reverse High Pressure (M Style)

Catalog Number	Connection Type	Pressure Rating psi (bar)	Dimension inches (mm)	
			A Hex	B
20RHCP21	RH 1-5/16	20000 (1378.9)	1.75 (34.9)	1.19 (30.2)
26RHCP16	RH 1	26000 (1792.6)	1.38 (34.9)	1.28 (32.5)
30RHCP14	RH 7/8	30000 (2068.4)	1.19 (34.9)	1.27 (32.1)
30RHCP12	RH 3/4	30000 (2068.4)	1.19 (34.9)	1.20 (30.5)
40RHCP9	RH 9	40000 (2757.8)	0.81 (34.9)	0.90 (22.7)

Both caps and plug required.

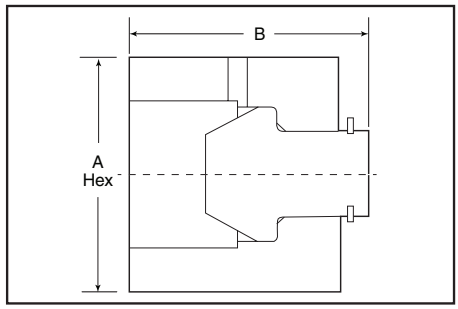

Tube cap configuration may vary from outline shown.

Gauge Connectors

Parker Autoclave Engineers offers a line of gauge connectors used to connect pressure lines to pressure gauges. Gauge connectors can be connected to gauges with tapered and straight pipe threads, or high-pressure connections.

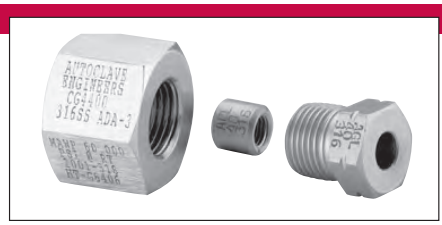

Gauge Connectors

To Fit This Gauge Connection			1/4" NPT	1/2" NPT	1/2" NPS
Seal Type			Tube Cone	Tube Cone	Gauget
With This Female Tubing Connection			60,000 PSI (4136.8 bar)	60,000 PSI (4136.8 bar)	60,000 PSI (4136.8 bar)
High Pressure	1/4"	F250C	CG4400	CG4800	CG8400
	9/16"	F562C		CG9800	CG8900

Gauge Connectors

To Fit This Gauge Connection			1/4" High Pressure F250C
Seal Type			H.P. Cone
With This Male Tubing Connection			20,000 PSI (1378.9 bar)
Medium Pressure	9/16"	SF562CX	101F-1707

NPT: National Pipe Thread
NPS: National Straight Pipe Thread

Note: For gauge connector without collars and glands, add the following suffix: **-WO**
For gauge connector for sour gas applications, add the following suffix: **-SOG or -SOGWO**

All general terms and conditions of sale, including limitations of our liability, apply to all products and services sold.

Gauge Connectors

Catalog Number	Gauge Connection Type	Outside Diameter Tube-Inches	Pressure Rating psi (bar)	Dimension inches (mm) A Hex	Dimension inches (mm) B	
CG4400	Tube Cone	1/4	60000 (4136.7)	1.00 (25.4)	.813 (20.6)	See Figure 1
CG4800	Tube Cone	1/4	60000 (4136.7)	1.19 (30.1)	.94 (23.8)	
CG9800	Tube Cone	9/16	60000 (4136.7)	1.50 (38.1)	1.25 (31.8)	
CG8400	Gasket	1/4	60000 (4136.7)	1.19 (30.1)	1.19 (30.1)	See Figure 2
CG8900	Gasket	9/16	60000 (4136.7)	1.38 (34.9)	2.25 (57.1)	
101F-1707	1/4" High Pressure	9/16	20000 (1379)	0.63 (15.9)	2.75 (69.9)	See Figure 3

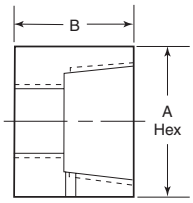

Figure 1
See note 2

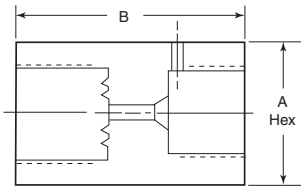

Figure 2

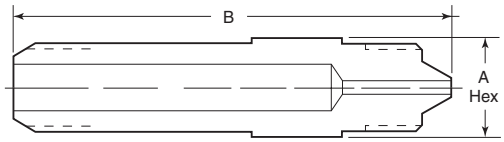

Figure 3

*Maximum pressure rating is based on the lowest rating of any component. Actual working pressure may be determined by tubing pressure rating, if lower.

Note: 1) For pressure rating see selection chart. These adapters are not intended as couplings.
2) Operation of this connector will depend on the inlet hole configuration in the gauge. Check to see that tubing will seal.

For prompt service, Parker Autoclave Engineers stocks select products. Consult factory.

WARNING

FAILURE, IMPROPER SELECTION OR IMPROPER USE OF THE PRODUCTS AND/OR SYSTEMS DESCRIBED HEREIN OR RELATED ITEMS CAN CAUSE DEATH, PERSONAL INJURY AND PROPERTY DAMAGE.
This document and other information from Parker Hannifin Corporation, its subsidiaries and authorized distributors provide product and/or system options for further investigation by users having technical expertise. It is important that you analyze all aspects of your application and review the information concerning the product or system in the current product catalog. Due to the variety of operating conditions and applications for these products or systems, the user, through its own analysis and testing, is solely responsible for making the final selection of the products and systems and assuring that all performance, safety and warning requirements of the application are met. The products described herein, including without limitation, product features, specifications, designs, availability and pricing, are subject to change by Parker Hannifin Corporation and its subsidiaries at any time without notice.

Offer of Sale

The items described in this document are available for sale by Parker Hannifin Corporation, its subsidiaries or its authorized distributors. Any sale contract entered by Parker will be governed by the provisions stated in Parker's standard terms and conditions of sale (copy available upon request).

© 2015 Parker Hannifin Corporation | Autoclave Engineers is a registered trademark of the Parker Hannifin Corporation

02-0127SE February2015

Instrumentation Products Division
Autoclave Engineers Operation
8325 Hessinger Drive
Erie, Pennsylvania 16509-4679 USA
PH: 814-860-5700 FAX: 814-860-5811
www.autoclave.com

Parker Hannifin Manufacturing Ltd.
Instrumentation Products Division, Europe
Industrial Estate Whitemill
Wexford, Republic of Ireland
PH: 353 53 914 1566
FAX: 353 53 914 1582

Caution! Do not mix or interchange parts or tubing with those of other manufacturers. Doing so is unsafe and will void warranty.

Caution! Parker Autoclave Engineers Valves, Fittings and Tools are not designed to work with common commercial instrument tubing and will only work with tubing built to Parker Autoclave Engineers AES Specifications. Failure to do so will void warranty.

ISO-9001 Certified

ball valves

Tel: +45 63 12 83 00 | Email: ps@hymatik.com | www.hymatik.com | Hvidkaervej 27a, DK-5250 Odense SV, Denmark

Ball Valves & Actuators

2 Way, 3 Way, 4 Way Series Ball Valves
Pneumatic & Electric Actuators

Pressures to 20,000 psi (1379 bar)



Principle of Operation:

Parker Autoclave Engineers high-pressure ball valves have been designed to provide superior quality for maximum performance within a variety of valve styles, sizes, and process connections. Some of the more unique design innovations include an integral one-piece trunnion mounted style ball and stem that eliminates the shear failure common in two piece designs, re-torqueable seat glands that result in longer seat life, and a low friction stem seal that reduces actuation torque and enhances cycle life.

These ball valves can also be modified to incorporate the use of special materials, seals for high temperature applications, subsea models as well as pneumatic and electric valve actuators. When it comes to high-pressure applications, these ball valves with the associated high-pressure components, provide the critical performance demanded by the high pressure market.

Universal Ball Valve Features:

- One-piece, trunnion style ball-stem design eliminates shear failure and reduces side loading found in two-piece designs
- Re-torqueable seat glands for longer seat life
- PEEK™ seats offer excellent resistance to chemicals, heat, and wear/abrasion
- Full-port flow path minimizes pressure drop
- UNS S31600 high tensile strength cold worked 316 Stainless Steel construction
- Optional materials available such as 2507 Super Duplex, Inconel 625, Hastelloy C-276, and others. Contact Factory
- Low friction, pressure assisted, graphite filled PTFE stem seal increases cycle life and reduces operating torque
- Temperature Rated 0° to 400°F (-18° to 204°C) with standard FKM (Viton®) o-rings
- Optional seals available for temperatures to 500°F (260°C) maximum
- Special material versions meeting NACE/ISO 15156 requirements are available
- Wide selection of tube or pipe end fittings available
- Electric and pneumatic actuator options are offered

Parker Autoclave Engineers®

ENGINEERING YOUR SUCCESS.

Tel: +45 63 12 83 00 | Email: ps@hymatik.com | www.hymatik.com | Hvidkaervej 27a, DK-5250 Odense SV, Denmark

Table of Contents:

Many types of Ball Valves are sized primarily by connection size. Parker Autoclave Engineers offer multiple connection sizes within various bore sizes listed below, providing enhanced flow options. **It is necessary when ordering to state both bore and connection sizes.**

2 Way Ball Valve: 1/4" (6.35 mm) maximum bore 3

2 Way Ball Valve: 3/8" (9.52 mm) maximum bore 6

2 Way Ball Valve: 1/2" (12.70 mm) maximum bore 8

2 Way Ball Valve: 3/4" (19.05 mm) maximum bore 12

2 Way Ball Valve: 1" (25.40 mm) maximum bore 16

3 Way Ball Valve: 3/16" (4.77 mm) maximum bore 20

3 Way Ball Valve: 3/8" (9.52 mm) maximum bore 23

3 Way Ball Valve: 1/2" (12.70 mm) maximum bore 25

4 Way Ball Valve: 3/8" (9.52 mm) maximum bore 29

Ball Valve Actuators: Pneumatic and Electric 34

Ball Valve Lockout Options 43

Tel: +45 63 12 83 00 | Email: ps@hymatik.com | www.hymatik.com | Hvidkaervej 27a, DK-5250 Odense SV, Denmark

2 Way Quarter Turn Ball Type 1/4" to 1" Bore

Pressures to 20,000 psi (1380 bar)

2B4, 2B6, 2B8, 2B12, 2B16 Series

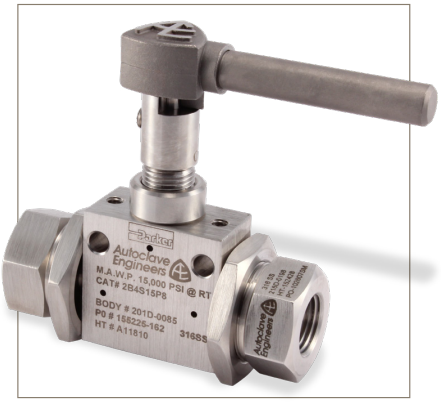

2 Way Ball Valve Features:

- One-piece, trunnion style, micro-finished ball-stem design eliminates shear failure and reduces side loading found in two-piece designs.
- Re-torqueable seat glands for longer seat life.
- PEEK™ seats offer excellent resistance to chemicals, heat, and wear/abrasion.
- Full-port, bi-directional, straight-through flow path minimizes pressure drop.
- Low friction, pressure assisted, graphite filled PTFE stem seal increases cycle life and reduces operating torque.
- Quarter turn (90° actuation) from open to close with positive stop.
- FKM Fluorocarbon (Viton®) O-rings are standard, 0° to 400°F (-18° to 204°C)
- Optional seals available for temperatures to 500°F (260°C) maximum.
- Wide selection of tube and pipe end fittings available.
- 24VDC, 120 & 220VAC Electric and pneumatic actuator options.

2 Way Ball Valve Applications:

- Laboratories
- Test Stands
- Control Panels
- Pilot Plants
- Chemical/Petrochemical
- Oil & Gas Production

Flow Configuration

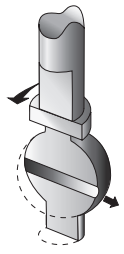

Two-Way Shut-Off

Tel: +45 63 12 83 00 | Email: ps@hymatik.com | www.hymatik.com | Hvidkaervej 27a, DK-5250 Odense SV, Denmark

2 Way Series: 1/4" (6.35mm) Orifice - Pressures to 20,000 psi (1379 bar)



Connection Type	MAWP** at Room Temperature	Minimum Orifice Inches (mm)	Rated Cv*
SW250 (1/4" LP)	15,000 psi (1034 bar)	0.129 (3.28)	0.27
SW375 (3/8" LP)	15,000 psi (1034 bar)	0.250 (6.35)	1.51
SW500 (1/2" LP)	10,000 psi (690 bar)	0.250 (6.35)	1.51
SF250CX20 (1/4" MP)	20,000 psi (1379 bar)	0.109 (2.77)	0.17
SF375CX20 (3/8" MP)	20,000 psi (1379 bar)	0.203 (5.16)	0.94
SF562CX20 (9/16" MP)	20,000 psi (1379 bar)	0.250 (6.35)	1.51
F250C (1/4" HP)	20,000 psi (1379 bar)	0.094 (2.39)	0.12
F375C (3/8" HP)	20,000 psi (1379 bar)	0.125 (3.17)	0.25
F562C (9/16" HP)	20,000 psi (1379 bar)	0.188 (4.77)	0.68
1/4" FNPT	15,000 psi (1034 bar)	0.250 (6.35)	1.51
3/8" FNPT	15,000 psi (1034 bar)	0.250 (6.35)	1.51
1/2" FNPT	15,000 psi (1034 bar)	0.250 (6.35)	1.51
QS250 (1/4" QSS)	15,000 psi (1034 bar)	0.109 (2.77)	0.17
QS375 (3/8" QSS)	15,000 psi (1034 bar)	0.250 (6.35)	1.51
To determine MPa, Multiply Bar by 0.1			

** Special materials often have reduced MAWP ratings, see Technical brochure for assistance

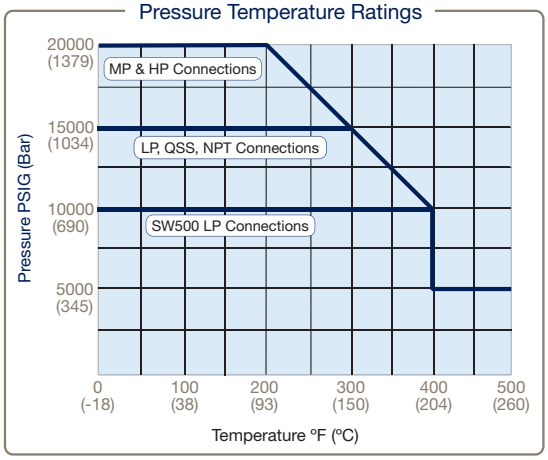

2-Way, 1/4" Bore Ball Valve

Pressure Ratings are determined by the end connections chosen, see chart.
Maximum Temperature rating is determined by the o-ring material (see following description)
NPT connections are limited to 400°F max due to PTFE Sealant.

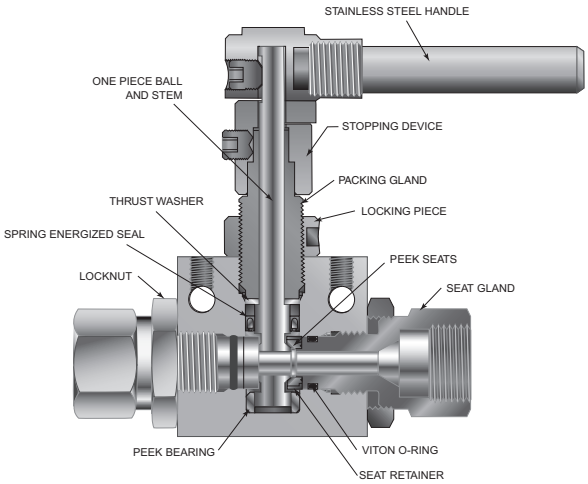

To ensure proper fit use Parker Autoclave tubing

NOTE: Critical gas applications such as Hydrogen or Helium is not recommended and should be evaluated on a case by case basis. Consult factory.

See ball valve actuator section for full description, additional information, and options.additional information, and options.

Tel: +45 63 12 83 00 | Email: ps@hymatik.com | www.hymatik.com | Hvidkaervej 27a, DK-5250 Odense SV, Denmark

Ordering Guide:

2-way ball valves are furnished complete with tube or pipe connections. Standard valve uses FKM o-rings [400ºF (204ºC) maximum].

Building a Part Number: *Example: 2B4S20M9*

Example Part Number:	2B	4	S	20	M9	–	XXX
Ordering Parameters/Options:	Valve Series	Ball Orifice Diameter	Material	Pressure (x 1000 psi)	End Connection		Options
Table Reference: (see below)	A	B	C	D	E		F

A - Valve Series	
2B	2 Way Ball Valve

B - Ball Orifice Diameter	
4	1/4" (6.35mm)

C - Base Material	
S	316 Cold Worked (non-NACE) Stainless Steel
S	2507 Super Duplex Wetted Material (needs "**F**" Material Code Suffix)
HC**	Hastelloy C
IN625**	Inconel 625 Wetted Material
IN825**	Inconel 825 Wetted Material
Additional Material Available, please contact factory.	

D - Pressure (x 1000 psi)	
10	10,000 psi (690 bar) (1/2" LP connection)
15	15,000 psi (1034 bar) (LP, NPT, and QSS Connections)
20	20,000 psi (1380 bar) (MP & HP Connections)

Basic Repair Kits: (see page 11 for kit contents)
When ordering a basic repair kit add an "**R**" prefix before product model codes A, B, and C (see above). Example: R2B4S

When ordering with "**F-Options**" add an "**R**" prefix before model codes A, B, C and F (see above). Example: R2B4S-EPR Contact your Parker Autoclave Engineers Sales Representative with any questions or refer to the Operation & Maintenance manuals (found online at www.Autoclave.com) for proper maintenance procedures.

E - End Connection			
	Connection	MAWP @ RT	Seat Gland Hex
L4	SW250 (1/4" LP)	15,000 psi	1"
L6	SW375 (3/8" LP)	15,000 psi	1"
L8	SW500 (1/2" LP)	10,000 psi	1"
M4	SF250CX20 (1/4" MP)	20,000 psi	1"
M6	SF375CX20 (3/8" MP)	20,000 psi	1"
M9	SF562CX20 (9/16" MP)	20,000 psi	1"
H4	F250C (1/4" HP)	20,000 psi	1"
H6	F375C (3/8" HP)	20,000 psi	1"
H9	F562C (9/16" HP)	20,000 psi	1-3/8"
P4	1/4" FNPT	15,000 psi	1"
P6	3/8" FNPT	15,000 psi	1"
P8	1/2" FNPT	15,000 psi	1-3/8"
Q4	QS250 (1/4" QSS)	15,000 psi	1"
Q6	QS375 (3/8" QSS)	15,000 psi	1"

F - Options (Suffix addition)	
BO	O-ring, Buna-N, 40° to 250°F (121°C)
EPR	O-ring, Ethylene Propylene Rubber, 0° to 250°F (121°C)
HT	O-ring, Perfluoroelastomer (Parofluor®) FFKM 30° to 500°F (260°C)
K	Antivibration Gland Fitting (Cone & Thread Only)
L	Lockout Bracket, (see page 43 for detail)
SOG*	ALL Parts NACE material, hardness Check, NACE Certification
2507**	2507 Super Duplex (20,000 psi max.) used with "**S**" Material Code
PM	Panel Mount Hardware
For Ball Valve Actuator Options see chart below	

Notes:
316 SS Valve bodies are cold worked and not suitable for use in NACE/ISO 15156 applications. If required, contact factory for options.

* SOG suffix also changes CW 316 SS body material to Annealed 316 SS suitable for NACE service. Contact factory for pressure reduction.

** Special materials often have reduced MAWP ratings, see Technical brochure for assistance.

Ball Valve Actuator Suffix options: For Detailed Actuator Information please see pages 34-42

Pneumatic Actuator		Electric Actuator			Actuator Operating Temperature	
		WP	EXP			
AO	Air to Open / Spring to Close	**EO1**	**EO1X**	120 volt AC 50/60 Hz	**Pneumatic**	-10ºF to 176ºF (-23ºC to 80ºC)
AC	Air to Close / Spring to Open	**EO2**	**EO2X**	220 volt AC 50/60 Hz	**Electric**	0ºF to 160ºF (-17ºC to 71ºC)
AOC	Air to Open and Close (Double Action)	**EO3**	**EO3X**	24 VDC		

2 Way Series: 3/8" (9.52mm) Orifice - Pressures to 20,000 psi (1379 bar)

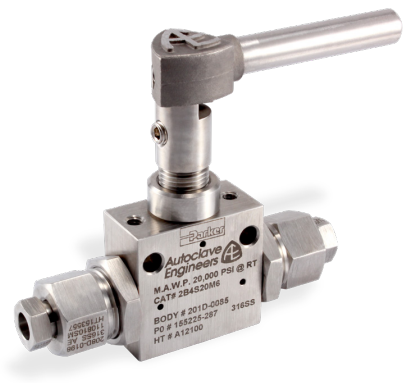

Connection Type	MAWP** at Room Temperature	Minimum Orifice Inches (mm)	Rated Cv*
SW500 (1/2" LP)	10,000 psi (690 bar)	0.375 (9.52)	5.20
SF375CX20 (3/8" MP)	20,000 psi (1379 bar)	0.203 (5.16)	0.94
SF562CX20 (9/16" MP)	20,000 psi (1379 bar)	0.312 (7.92)	3.24
SF750CX10 (3/4" MP)	20,000 psi (1379 bar)	0.328 (8.33)	3.40
1/4" FNPT	15,000 psi (1034 bar)	0.375 (9.52)	5.20
3/8" FNPT	15,000 psi (1034 bar)	0.375 (9.52)	5.20
1/2" FNPT	15,000 psi (1034 bar)	0.375 (9.52)	5.20
QS375 (3/8" QSS)	15,000 psi (1034 bar)	0.250 (6.35)	1.68
QS562 (9/16" QSS)	15,000 psi (1034 bar)	0.359 (9.12)	4.77
To determine MPa, Multiply Bar by 0.1			

** Special materials often have reduced MAWP ratings, see Technical brochure for assistance

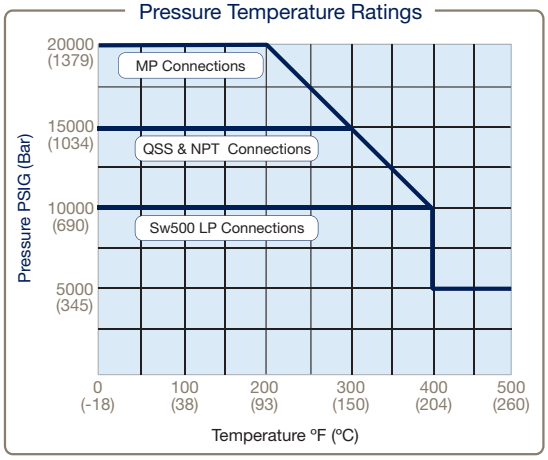

2 Way 3/8" Bore Ball Valve

Pressure Ratings are determined by the end connections chosen, see chart.
Maximum Temperature rating is determined by the o-ring material (see following description)
NPT connections are limited to 400°F max due to PTFE Sealant.

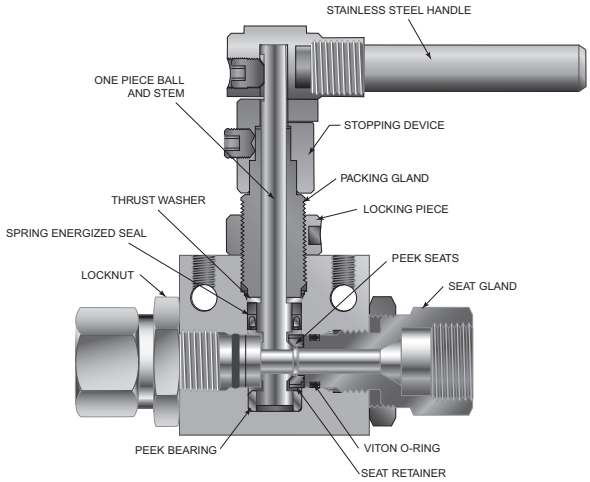

To ensure proper fit use Parker Autoclave tubing

NOTE: Critical gas applications such as Hydrogen or Helium are not recommended and should be evaluated on a case by case basis. Consult factory.

See ball valve actuator section for full description, additional information, and options.additional information, and options.

Tel: +45 63 12 83 00 | Email: ps@hymatik.com | www.hymatik.com | Hvidkaervej 27a, DK-5250 Odense SV, Denmark

Ordering Guide:

2-way ball valves are furnished complete with tube or pipe connections. Standard valve uses FKM o-rings [400ºF (204ºC) maximum].

Building a Part Number: *Example: 2B6S20M9*

Example Part Number:	2B	6	S	20	M9	–	XXX
Ordering Parameters/Options:	Valve Series	Ball Orifice Diameter	Material	Pressure (x 1000 psi)	End Connection		Options
Table Reference: (see below)	A	B	C	D	E		F

A - Valve Series	
2B	2 Way Ball Valve

B - Ball Orifice Diameter	
6	3/8" (9.52mm)

C - Base Material	
S	316 Cold Worked (non-NACE) Stainless Steel
S	2507 Super Duplex Wetted Material (needs "**F**" Material Code Suffix)
IN625**	Inconel 625 Wetted Material
Optional Material Available, please contact factory.	

D - Pressure (x 1000 psi)	
10	10,000 psi (690 bar) (1/2" LP Connection)
15	15,000 psi (1034 bar) (NPT & QSS Connections)
20	20,000 psi (1080 bar) (MP Connections)
Maximum MAWP based on connection type or material (whichever is lower)	

E - End Connection			
	Connection	MAWP @ RT	Seat Gland Hex
L8	SW500 (1/2" LP)	10,000 psi	1-3/8"
M6	SF375CX20 (3/8"MP)	20,000 psi	1-3/8"
M9	SF562CX20 (9/16"MP)	20,000 psi	1-3/8"
M12	SF750CX10 (3/4"MP)	20,000 psi	1-3/8"
P4	1/4" FNPT	15,000 psi	1-3/8"
P6	3/8" FNPT	15,000 psi	1-3/8"
P8	1/2" FNPT	15,000 psi	1-3/8"
Q4	QS250 (1/4"QSS)	15,000 psi	1-3/8"
Q6	QS375 (3/4"QSS)	15,000 psi	1-3/8"

F - Options (Suffix addition)	
BO	O-ring, Buna-N, 40° to 250°F (121°C)
EPR	O-ring, Ethylene Propylene Rubber, 0° to 250°F (121°C)
HT	O-ring, Perfluoroelastomer (Parofluor®) FFKM 30° to 500ºF (260ºC)
K	Antivibration Gland Fitting (Cone & Thread Only)
L	Lockout Bracket (see page 43 for detail)
SOG*	ALL Parts NACE material, hardness Check, NACE Certification
2507**	2507 Super Duplex (20,000 psi max.) used with "**S**" Material Code
PM	Panel Mount Hardware
For Ball Valve Actuator Options see chart below	

Basic Repair Kits: (see page 11 for kit contents)
When ordering a basic repair kit add an "**R**" prefix before product model codes A, B, and C (see above). Example: R2B6S

When ordering with "**F-Options**" add an "**R**" prefix before model codes A, B, C and F (see above). Example: R2B6S-EPR Contact your Parker Autoclave Engineers Sales Representative with any questions or refer to the Operation & Maintenance manuals (found online at www.Autoclave.com) for proper maintenance procedures.

Notes:
316 SS Valve bodies are cold worked and not suitable for use in NACE/ISO 15156 applications. If required, contact factory for options.

* SOG suffix also changes CW 316 SS body material to Annealed 316 SS suitable for NACE service. Contact factory for pressure reduction.

** Special materials often have reduced MAWP ratings, see Technical brochure for assistance.

Ball Valve Actuator Suffix options: For Detailed Actuator Information please see pages 34-42

Pneumatic Actuator		Electric Actuator			Actuator Operating Temperature	
		WP	EXP			
AO	Air to Open / Spring to Close	**EO1**	**EO1X**	120 volt AC 50/60 Hz	**Pneumatic**	-10ºF to 176ºF (-23ºC to 80ºC)
AC	Air to Close / Spring to Open	**EO2**	**EO2X**	220 volt AC 50/60 Hz	**Electric**	0ºF to 160ºF (-17ºC to 71ºC)
AOC	Air to Open and Close (Double Action)	**EO3**	**EO3X**	24 VDC		

2 Way Series: 1/2" (12.7mm) Orifice - Pressures to 15,000 psi (1034 bar)

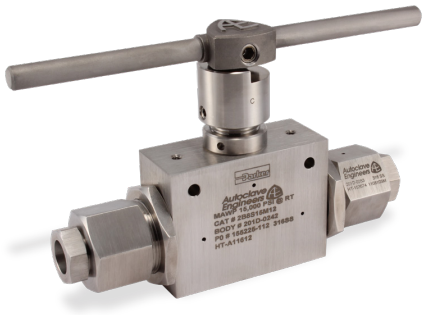

Connection Type	MAWP** at Room Temperature	Minimum Orifice Inches (mm)	Rated Cv*
SF750CX10 (3/4" MP)	15,000 psi (1034 bar)	0.500 (12.70)	10.20
SF1000CX10 (1" MP)	15,000 psi (1034 bar)	0.500 (12.70)	10.20
3/4" FNPT	10,000 psi (690 bar)	0.500 (12.70)	10.20
1" FNPT	10,000 psi (690 bar)	0.500 (12.70)	10.20
QS750 (3/4" QSS)	15,000 psi (1034 bar)	0.500 (12.70)	10.20
QS1000 (1" QSS)	15,000 psi (1034 bar)	0.500 (12.70)	10.20
To determine MPa, Multiply Bar by 0.1			

** Special materials often have reduced MAWP ratings, see Technical brochure for assistance

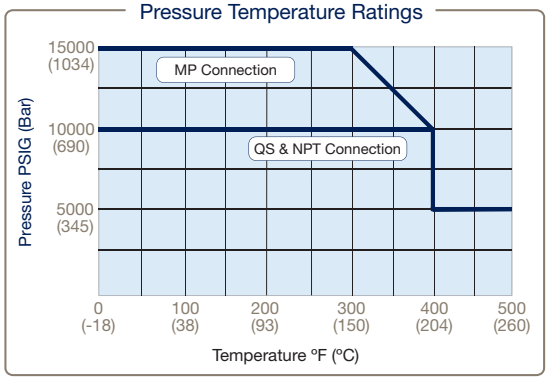

2 Way 1/2" Bore Ball Valve

Pressure Ratings are determined by the end connections chosen, see chart.
Maximum Temperature rating is determined by the o-ring material (see following description)
NPT connections are limited to 400°F max due to PTFE Sealant.

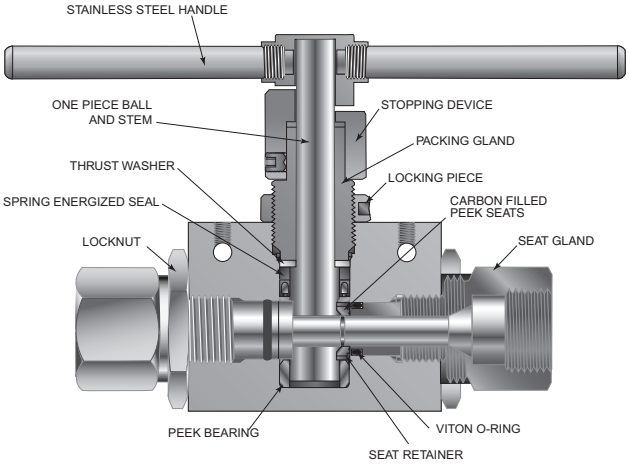

To ensure proper fit use Parker Autoclave tubing

NOTE: Critical gas applications such as Hydrogen or Helium are not recommended and should be evaluated on a case by case basis. Consult factory.

Tel: +45 63 12 83 00 | Email: ps@hymatik.com | www.hymatik.com | Hvidkaervej 27a, DK-5250 Odense SV, Denmark

Ordering Guide:

For complete information on available end connections and material options, see next page. 2-way ball valves are furnished complete with tube or pipe connections. Standard valve uses FKM o-rings [400ºF (204ºC) maximum].

Building a Part Number: *Example: 2B8S15M12*

Example Part Number:	2B	8	S	15	M12	–	XXX
Ordering Parameters/Options:	Valve Series	Ball Orifice Diameter	Material	Pressure (x 1000 psi)	End Connection		Options
Table Reference: (see below)	A	B	C	D	E		F

A - Valve Series	
2B	2 Way Ball Valve

B - Ball Orifice Diameter	
8	1/2" (12.7mm)

C - Base Material	
S	316 Cold Worked (non-NACE) Stainless Steel
S	2507 Super Duplex Wetted Material (needs "**F**" Material Code Suffix)
S	6 Moly (25-4SMO) Material (needs "**F**" Material Code Suffix)
Additional Material Available, please contact factory.	

D - Pressure (x 1000 psi)	
10	10,000 psi
15	15,000 psi
Maximum MAWP based on connection type or material (whichever is lower)	

Basic Repair Kits: (see page 11 for kit contents)
When ordering a basic repair kit add an "**R**" prefix before product model codes A, B, and C (see above). Example: R2B8S

When ordering with "**F-Options**" add an "**R**" prefix before model codes A, B, C and F (see above). Example: R2B8S-EPR Contact your Parker Autoclave Engineers Sales Representative with any questions or refer to the Operation & Maintenance manuals (found online at www.Autoclave.com) for proper maintenance procedures.

E - End Connection			
	Connection	MAWP @ RT	Seat Gland Hex
M12	SF750CX10 (3/4" MP)	15,000 psi	1-3/4"
M16	SF1000CX10 (1" MP)	15,000 psi	1-3/4"
P12	3/4" FNPT	10,000 psi	1-3/4"
P16	1" FNPT	10,000 psi	1-3/4"
Q12	QS750 (3/4" QSS)	15,000 psi	1-3/8"
Q16	QS1000 (1" QSS)	15,000 psi	2" (square)

F - Options (Suffix Addition)	
BO	O-ring, Buna-N, 40° to 250°F (121°C)
EPR	O-ring, Ethylene Propylene Rubber, 0° to 250°F (121°C)
HT	O-ring, Perfluoroelastomer (Parofluor®) FFKM 30° to 500ºF (260ºC)
K	Antivibration Gland Fitting (Cone & Thread Only)
L	Lockout Bracket (see page 43 for detail)
SOG*	ALL Parts NACE material, hardness Check, NACE Certification
2507**	2507 Super Duplex (20,000 psi max.) used with "**S**" Material Code
25-4MO**	6 Moly (25-4SMO) Material (used with "**S**" material code)
PM	Panel Mount Hardware
For Ball Valve Actuator Options see chart below	

Notes:
316 SS Valve bodies are cold worked and not suitable for use in NACE/ISO 15156 applications. If required, contact factory for options.

* SOG suffix also changes CW 316 SS body material to Annealed 316 SS suitable for NACE service. Contact factory for pressure reduction.

** Special materials often have reduced MAWP ratings, see Technical brochure for assistance.

Ball Valve Actuator Suffix options: For Detailed Actuator Information please see pages 34-42

Pneumatic Actuator		Electric Actuator			Actuator Operating Temperature	
		WP	EXP			
AO	Air to Open / Spring to Close	**EO1**	**EO1X**	120 volt AC 50/60 Hz	**Pneumatic**	-10ºF to 176ºF (-23ºC to 80ºC)
AC	Air to Close / Spring to Open	**EO2**	**EO2X**	220 volt AC 50/60 Hz	**Electric**	0ºF to 160ºF (-17ºC to 71ºC)
AOC	Air to Open and Close (Double Action)	**EO3**	**EO3X**	24 VDC		

2 Way Ball Valve Dimensions:

2 Way Ball Valve: 1/4" thru 1/2"

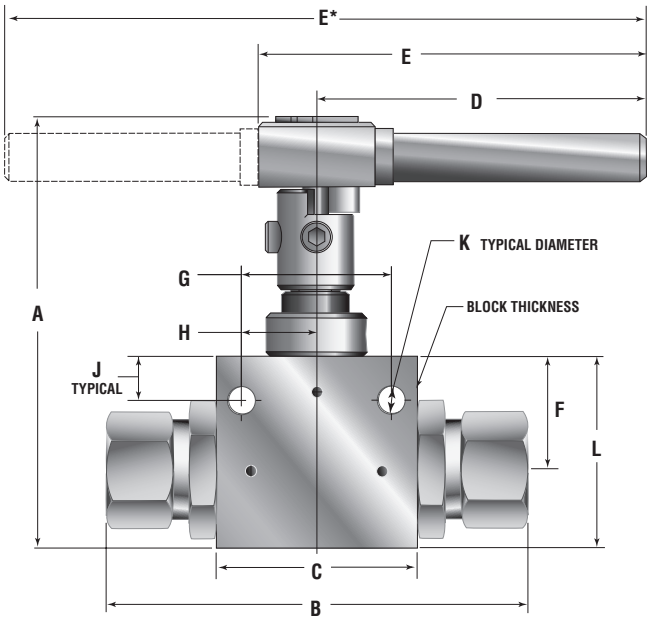

	VALVE MODELS - inches (mm)		
	2B4S	2B6S	2B8S
A	4.33 (109.99)	4.99 (126.75)	5.97 (151.64)
B	4.19 (106.49)	5.53 (140.41)	7.73 (196.46)
C	2.00 (50.80)	3.00 (76.20)	4.13 (104.78)
D	3.37 (85.55)	4.99 (126.82)	5.12 (130.04)
E	3.83 (97.28)	5.45 (138.43)	10.24* (260.10)
F	1.13 (28.58)	1.38 (34.92)	1.76 (44.70)
G	1.50 (38.10)	2.00 (50.80)	3.00 (76.20)
H	0.75 (19.05)	1.00 (25.40)	1.50 (38.10)
J	0.44 (11.18)	0.41 (10.31)	0.50 (12.70)
K	0.28 (7.11)	0.28 (7.11)	0.28 (7.11)
L	1.91 (48.41)	2.50 (63.50)	3.09 (78.58)
Block Thickness	1.00 (25.40)	1.38 (35.05)	1.75 (44.45)

Panel Mounting Dimensions:

2 Way Ball Valve Panel Mounting

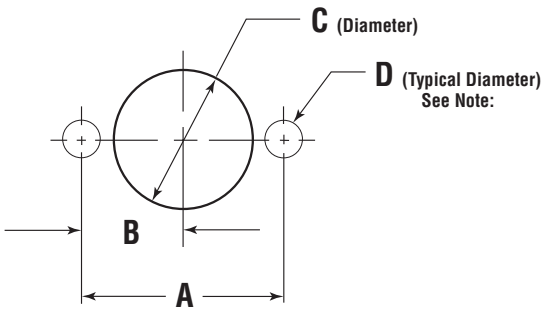

All dimensions are for reference only and are subject to change without notice.

	VALVE MODELS - inches (mm)		
	2B4S	2B6S	2B8S
A	1.50 (38.10)	2.00 (50.80)	3.00 (76.20)
B	0.75 (19.05)	1.00 (25.40)	1.50 (38.10)
C	1.06 (26.92)	1.50 (38.10)	1.88 (47.63)
D	0.28 (7.11)	0.28 (7.11)	0.28 (7.11)

Note: Body Mounting 1/4" - 20 threads

Tel: +45 63 12 83 00 | Email: ps@hymatik.com | www.hymatik.com | Hvidkaervej 27a, DK-5250 Odense SV, Denmark

Parts Listing and Material: Typical 1/4", 3/8" and 1/2" - 2 Way Ball Valve Series

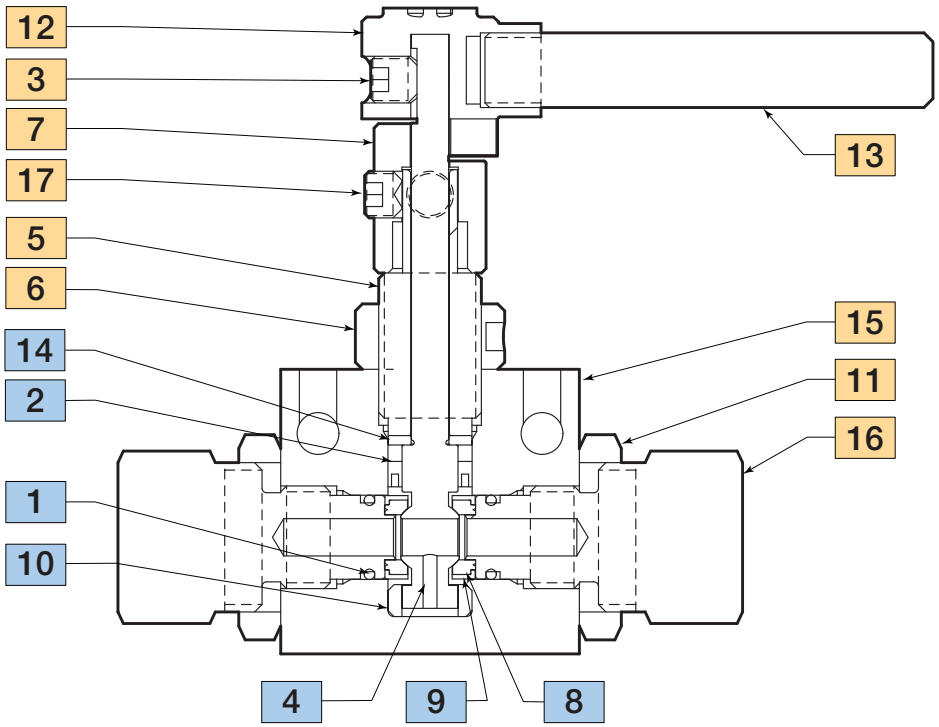

Material of Construction:

Item #	Description	Material
1	O-Ring	FKM
2	Stem Seal	Graphite Carbon PTFE
3	Set Screw, 5/16-18	Stainless Steel
4	Stem	316 CS SS
5	Packing Gland	316 CS SS
6	Locking Piece	316 SS
7	Stopping Device	316 CW SS
8	Seat	316 CW SS
9	Seat Retainer	316 CW SS

Item #	Description	Material
10	Bottom Bearing	PEEK
11	Locknut	316 SS
12	Handle Hub	316 SS
13	Handle	304 SS
14	Thrust Washer	AMPCO 45
15	Body	316 SS
16	Seat Gland	316 CW SS
17	Set Screw, 5/16-24	Stainless

Typical spare parts found in Repair Kits

2 Way Series: 3/4" (19.05mm) Orifice - Pressures to 15,000 psi (1034 bar)

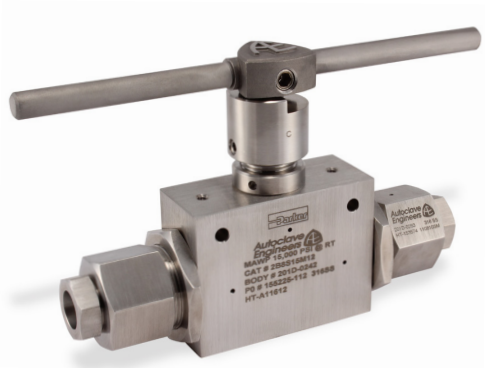

Connection Type	MAWP** at Room Temperature	Minimum Orifice Inches (mm)	Rated Cv*
SF1000CX10 (1" MP)	15,000 psi (1034 bar)	0.688 (17.48)	21.00
3/4" FNPT	10,000 psi (690 bar)	0.750 (19.05)	24.00
1" FNPT	10,000 psi (690 bar)	0.750 (19.05)	24.00
QS1000 (1" QSS)	15,000 psi (1034 bar)	0.688 (17.48)	21.00
To determine MPa, Multiply Bar by 0.1			

** Special materials often have reduced MAWP ratings, see Technical brochure for assistance

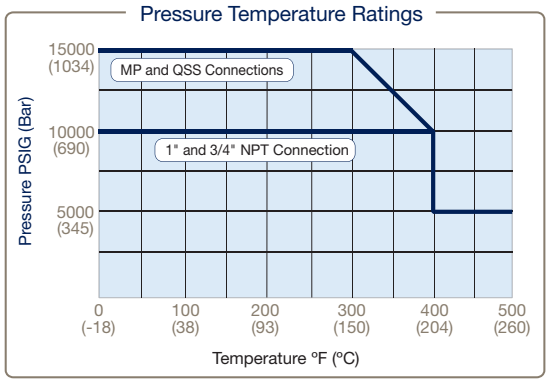

2 Way 3/4" Bore Ball Valve

Pressure Ratings are determined by the end connections chosen, see chart.
Maximum Temperature rating is determined by the o-ring material (see following description)
NPT connections are limited to 400°F max due to PTFE Sealant.

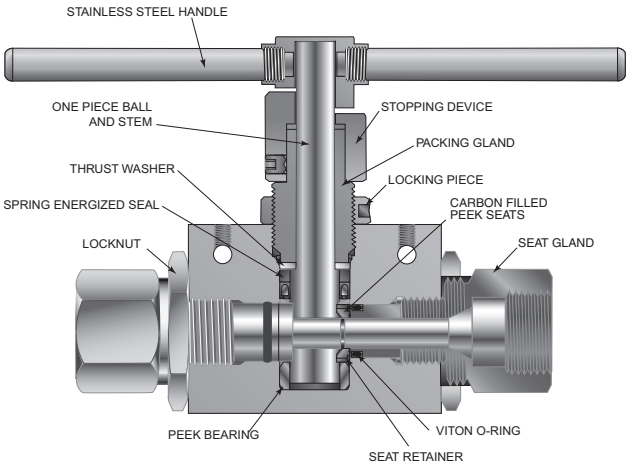

To ensure proper fit use Parker Autoclave tubing

NOTE: Critical gas applications such as Hydrogen or Helium are not recommended and should be evaluated on a case by case basis. Consult factory.

Tel: +45 63 12 83 00 | Email: ps@hymatik.com | www.hymatik.com | Hvidkaervej 27a, DK-5250 Odense SV, Denmark

Ordering Guide:

2-way ball valves are furnished complete with tube or pipe connections. Standard valve uses FKM o-rings [400°F (204°C) maximum].

Building a Part Number: ***Example: 2B12S15M16***

Example Part Number:	2B	12	S	15	M16	–	XXX
Ordering Parameters/Options:	Valve Series	Ball Orifice Diameter	Material	Pressure (x 1000 psi)	End Connection		Options
Table Reference: (see below)	A	B	C	D	E		F

A - Valve Series	
2B	2 Way Ball Valve

B - Ball Orifice Diameter	
12	3/4" (19.05 mm)

C - Base Material	
S	316 Cold Worked (non-NACE) Stainless Steel
S	2507 Super Duplex Wetted Material (needs "**F**" Material Code Suffix)
S	6 Moly (25-4SMO) Material (needs "**F**" Material Code Suffix))
Additional Material Available, please contact factory.	

D - Pressure (x 1000 psi)	
10	10,000 psi
15	15,000 psi
20	20,000 psi
Maximum MAWP based on connection type or material (whichever is lower)	

Basic Repair Kits: (see page 15 for kit contents)
When ordering a basic repair kit add an "**R**" prefix before product model codes A, B, and C (see above). Example: R2B12S

When ordering with "**F-Options**" add an "**R**" prefix before model codes A, B, C and F (see above). Example: R2B12S-EPR Contact your Parker Autoclave Engineers Sales Representative with any questions or refer to the Operation & Maintenance manuals (found online at www.Autoclave.com) for proper maintenance procedures.

E - End Connection			
	Connection	MAWP @ RT	Seat Gland Hex
M16	SF1000CX10 (1" MP)	15,000 psi	1-7/8"
P12	3/4" FNPT	10,000 psi	1-7/8"
P16	1" FNPT	10,000 psi	1-7/8"
Q16	QS1000 (1" QSS)	15,000 psi	2" (square)

F - Options (Suffix addition)	
BO	O-ring, Buna-N 40° to 250°F (121°C)
EPR	O-ring, Ethylene Propylene Rubber, 0° to 250°F (121°C)
C	PTFE U-Cup Seal 0° to 500°F max (260°C) (replaces O-rings)
K	Antivibration Gland Fitting (Cone & Thread Only)
L	Lockout Bracket (see page 43 for detail)
SOG*	ALL Parts NACE material, hardness Check, NACE Certification
2507**	2507 Super Duplex (20,000 psi max.) used with "**S**" Material Code
PM	Panel Mount Hardware
25-4MO**	6 Moly (25-4SMO) Material (used with "**S**" Material Code
For Ball Valve Actuator Options see chart below	

Notes:
316 SS Valve bodies are cold worked and not suitable for use in NACE/ISO 15156 applications. If required, contact factory for options.

* SOG suffix also changes CW 316 SS body material to Annealed 316 SS suitable for NACE service. Contact factory for pressure reduction.

** Special materials often have reduced MAWP ratings, see Technical brochure for assistance.

Ball Valve Actuator Suffix options: For Detailed Actuator Information please see pages 34-42

Pneumatic Actuator		Electric Actuator			Actuator Operating Temperature	
		WP	EXP			
AO	Air to Open / Spring to Close	**EO1**	**EO1X**	120 volt AC 50/60 Hz	**Pneumatic**	-10°F to 176°F (-23°C to 80°C)
AC	Air to Close / Spring to Open	**EO2**	**EO2X**	220 volt AC 50/60 Hz	**Electric**	0°F to 160°F (-17°C to 71°C)
AOC	Air to Open and Close (Double Action)	**N/A**	**N/A**	24 VDC		

2 Way Ball Valve Dimensions:

3/4" - 2 Way Ball Valve

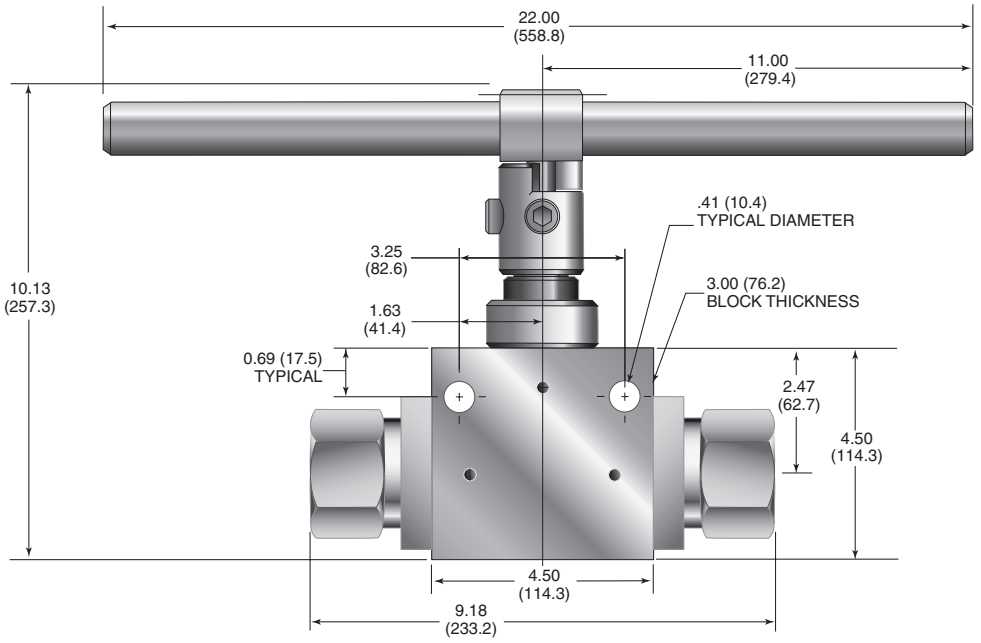

Panel Mounting Dimensions:

3/4" - 2 Way Ball Valve Panel Mounting

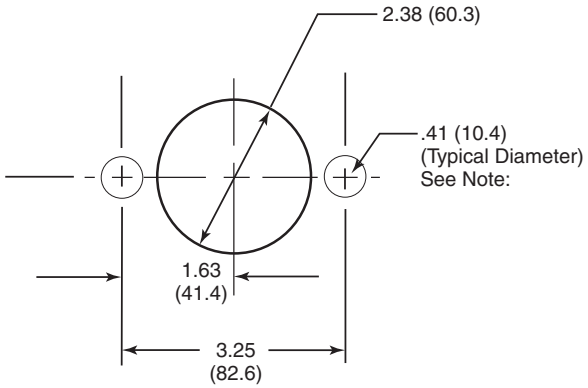

All dimensions are for reference only
and are subject to change without notice.
NOTE: Body mounting 3/8"-16 thread

Tel: +45 63 12 83 00 | Email: ps@hymatik.com | www.hymatik.com | Hvidkaervej 27a, DK-5250 Odense SV, Denmark

Parts Listing and Material: 3/4" - 2 Way Ball Valve Series

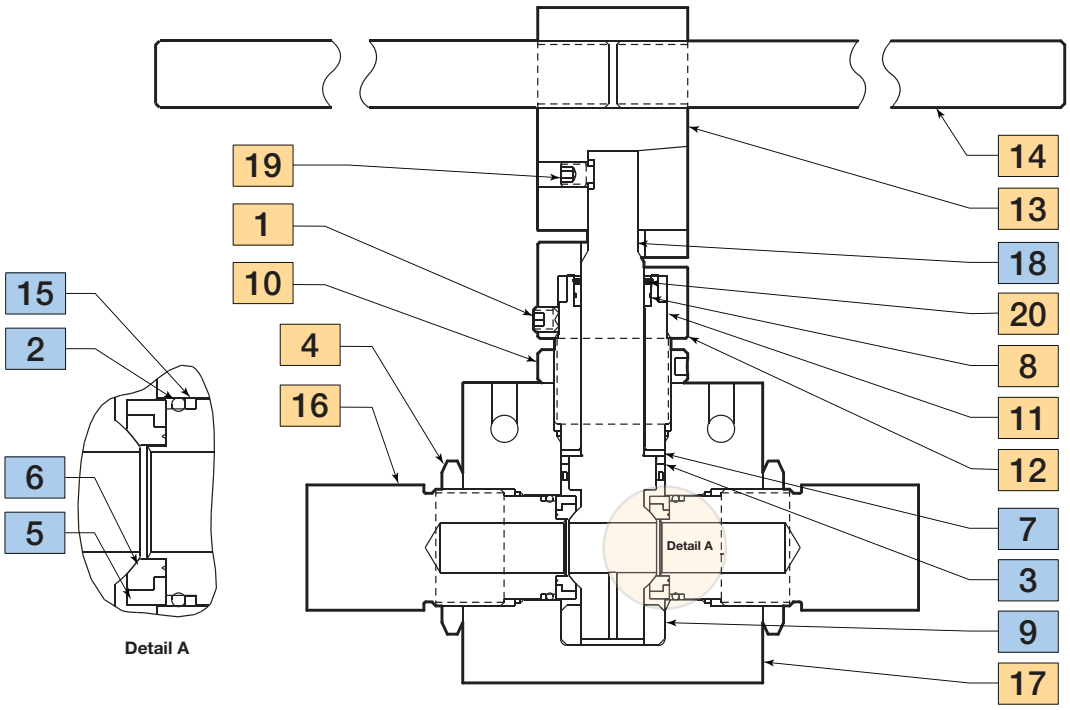

Material of Construction:

Item #	Description	Material
1	Set Screw, 3/8 -16	316 SS
2	O-ring	FKM
3	Stem Seal	PTFE with Graphite
4	Locknut	316 SS
5	Seat	PEEK
6	Seat Retainer	Zeron 100
7	Thrust Washer	AMPCO 45
8	Top Bearing	Virgin PEEK
9	Bottom Bearing	Virgin PEEK
10	Locking Piece	316 SS

Item #	Description	Material
11	Stopping Device	316 SS
12	Packing Gland	316 SS
13	Hex Handle Hub	316 SS
14	Handle	316 SS
15	O-ring Backup	AMPCO 45
16	Seat Gland	316 CW SS
17	Body	316 CW SS
18	Stem	316 CW SS
19	Set Screw, 3/8-16	316 SS
20	Retaining Ring	302 SS

Typical spare parts found in Repair Kits

2 Way Series: 1" (25.40mm) Orifice - Pressures to 10,000 psi (690 bar)

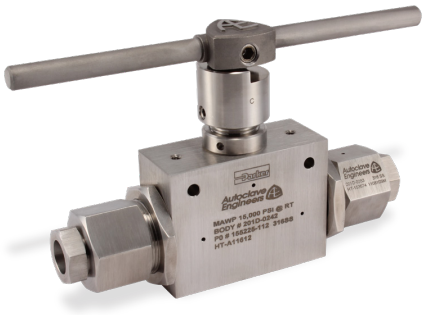

Connection Type	MAWP** at Room Temperature	Minimum Orifice Inches (mm)	Rated C_V*
SF1500CX10 (1.5" MP)	10,000 psi (690 bar)	0.938 (23.83)	34
1" FNPT	10,000 psi (690 bar)	1.00 (25.40)	37.2
To determine MPa, Multiply Bar by 0.1			

** Special materials often have reduced MAWP ratings, see Technical brochure for assistance

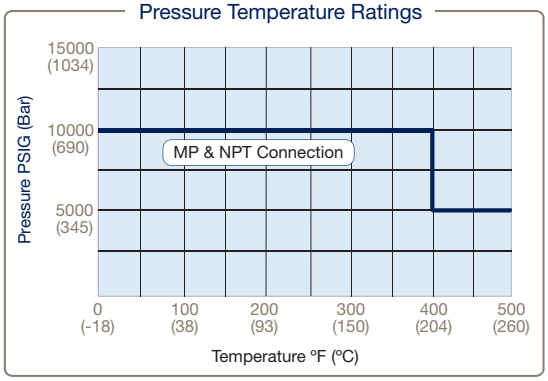

2 Way 1" Bore Ball Valve

Pressure Ratings are determined by the end connections chosen, see chart.
Maximum Temperature rating is determined by the o-ring material (see following description)
NPT connections are limited to 400°F max due to PTFE Sealant.

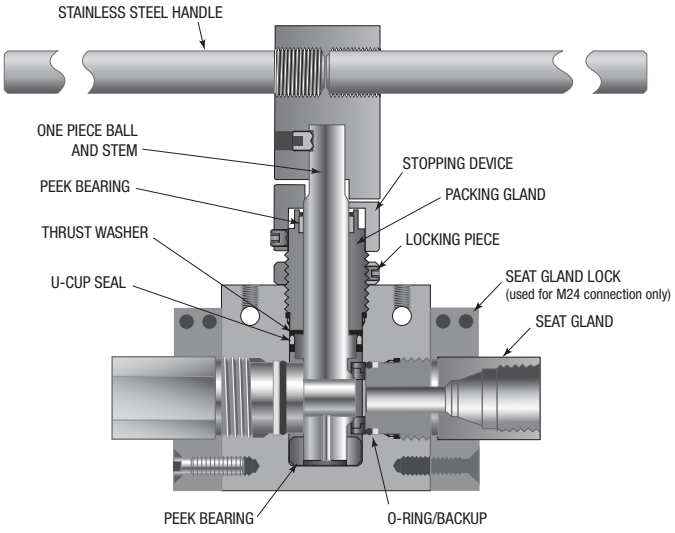

To ensure proper fit use Parker Autoclave tubing

NOTE: Critical gas applications such as Hydrogen or Helium are not recommended and should be evaluated on a case by case basis. Consult factory.

Tel: +45 63 12 83 00 | Email: ps@hymatik.com | www.hymatik.com | Hvidkaervej 27a, DK-5250 Odense SV, Denmark

Ordering Guide:

2-way ball valves are furnished complete with tube or pipe connections. Standard valve uses FKM o-rings [400ºF (204ºC) maximum].

Building a Part Number: *Example: 2B16S10M24*

Example Part Number:	2B	16	S	10	M24	–	XXX
Ordering Parameters/Options:	Valve Series	Ball Orifice Diameter	Material	Pressure (x 1000 psi)	End Connection		Options
Table Reference: (see below)	A	B	C	D	E		F

A - Valve Series	
2B	2 Way Ball Valve

B - Ball Orifice Diameter	
16	1" (25.4 mm)

C - Material	
S	316 Cold Worked (non-NACE) Stainless Steel
S	2507 Super Duplex Wetted Material (needs "**F**" Material Code Suffix)
S	6 Moly (25-4SMO) Material (needs "**F**" Material Code Suffix)
Additional Material Available, please contact factory.	

D - Pressure (x 1000 psi)	
10	10,000 psi
15	15,000 psi
20	20,000 psi
Maximum MAWP based on connection type or material (whichever is lower)	

E - End Connection			
	Connection	MAWP @ RT	Seat Gland Hex
M24	SF1500CX10 (1.5" MP)	10,000 psi	2-1/4"
P16	1" FNPT	10,000 psi	1-7/8"

F - Options (Suffix addition)	
BO	O-Ring, Buna-N 40° to 250°F (121°C)
EPR	O-Ring, Ethylene Propylene Rubber, 0° to 250°F (121°C)
C	PTFE U-Cup Seal 0° to 500°F max (260°C) (replaces O-rings)
K	Antivibration Gland Fitting (Cone & Thread Only)
L	Lockout Bracket (see page 43 for detail)
SOG*	ALL Parts NACE material, hardness Check, NACE Certification
2507**	2507 Super Duplex (20,000 psi max.) used with "**S**" Material Code
25-4MO**	6 Moly (25-4SMO) Material (used with "**S**" material code)
PM	Panel Mount Hardware
For Ball Valve Actuator Options see chart below	

Notes:
316 SS Valve bodies are cold worked and not suitable for use in NACE/ISO 15156 applications. If required, contact factory for options.

* SOG suffix also changes CW 316 SS body material to Annealed 316 SS suitable for NACE service. Contact factory for pressure reduction.

** Special materials often have reduced MAWP ratings, see Technical brochure for assistance.

Basic Repair Kits: (see page 19 for kit contents)
When ordering a basic repair kit add an "**R**" prefix before product model codes A, B, and C (see above). Example: R2B16S

When ordering with "**F-Options**" add an "**R**" prefix before model codes A, B, C and F (see above). Example: R2B16S-EPR Contact your Parker Autoclave Engineers Sales Representative with any questions or refer to the Operation & Maintenance manuals (found online at www.Autoclave.com) for proper maintenance procedures.

Ball Valve Actuator Suffix options: For Detailed Actuator Information please see pages 34-42

Pneumatic Actuator		Electric Actuator			Actuator Operating Temperature	
		WP	EXP			
AO	Air to Open / Spring to Close	**EO1**	**EO1X**	120 volt AC 50/60 Hz	**Pneumatic**	-10ºF to 176ºF (-23ºC to 80ºC)
AC	Air to Close / Spring to Open	**EO2**	**EO2X**	220 volt AC 50/60 Hz	**Electric**	0ºF to 160ºF (-17ºC to 71ºC)
AOC	Air to Open and Close (Double Action)	**N/A**	**N/A**			

2 Way Ball Valve Dimensions:

1" - 2 Way Ball Valve

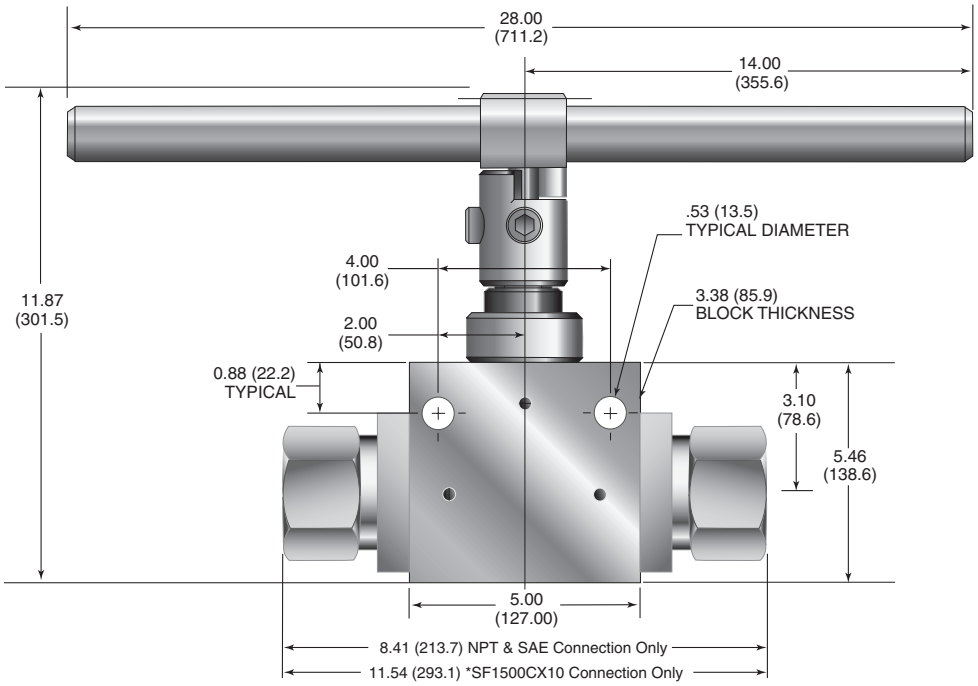

Panel Mounting Dimensions:

1" - 2 Way Ball Valve Panel Mounting

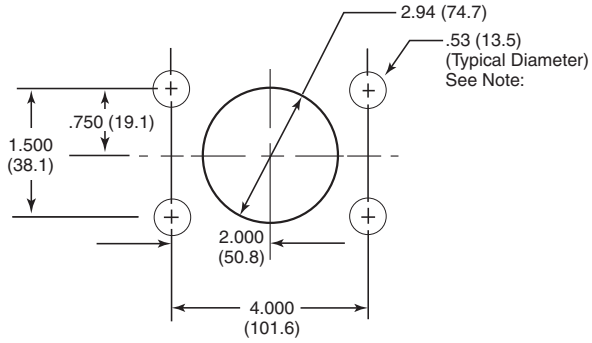

All dimensions are for reference only
and are subject to change without notice.
NOTE: Body mounting 3/8"-16 thread

Tel: +45 63 12 83 00 | Email: ps@hymatik.com | www.hymatik.com | Hvidkaervej 27a, DK-5250 Odense SV, Denmark

Parts Listing and Material: 1" - 2 Way Ball Valve Series

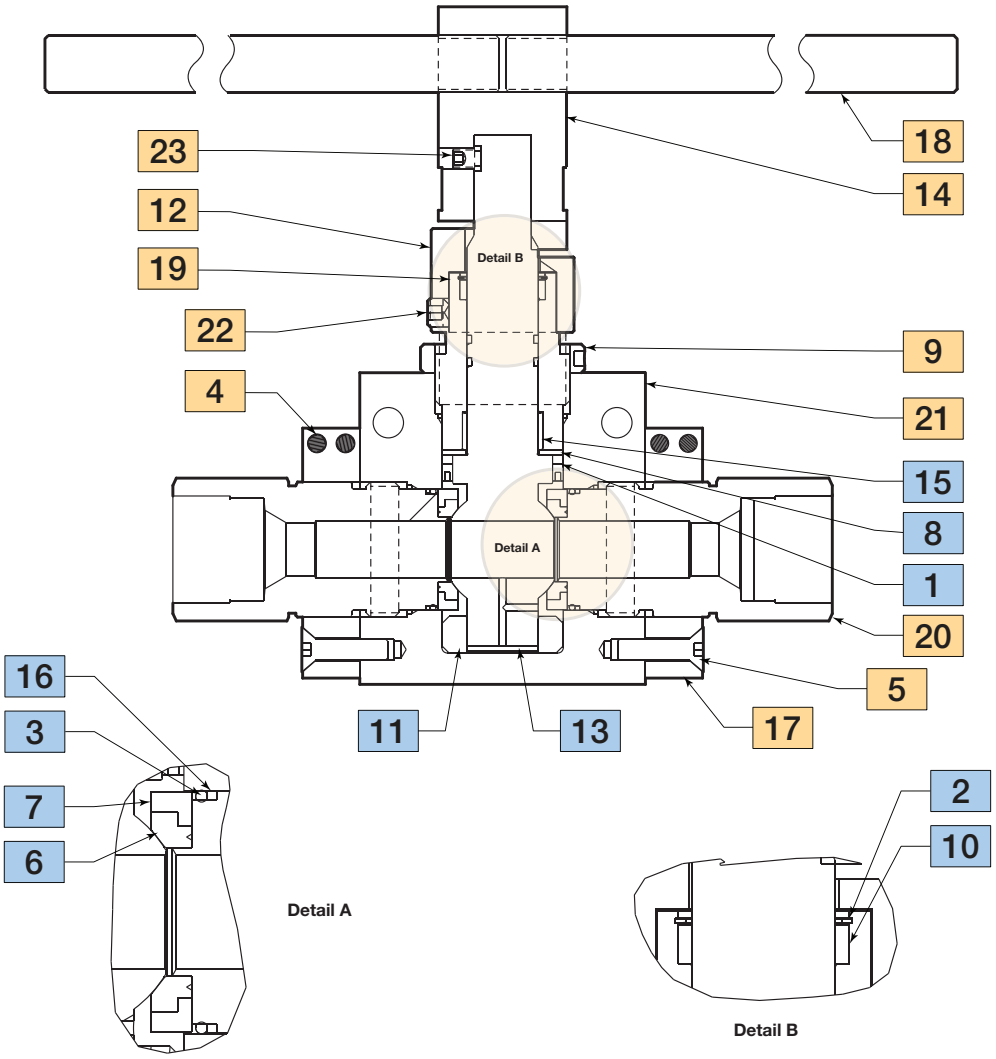

Material of Construction:

Item #	Description	Material
1	Stem Seal w/ Spring	PTFE w/ Graphite
2	Retaining Ring	316 SS
3	O-Ring	FKM
4	Hex Cap Screw, 5/16-18	316 SS
5	Flat Head Cap Screw, 3/8-16	316 SS
6	Seat	PEEK
7	Seat Retainer	316 CW SS
8	Thrust Washer	AMPCO 45
9	Locking Piece	316 SS
10	Top Bearing	Virgin PEEK
11	Bottom Bearing	Virgin PEEK
12	Stopping Device	316 SS

Item #	Description	Material
13	Stem	316 CW SS
14	Hex Handle Hub	316 SS
15	Bearing	AMPCO 45
16	O-Ring Backup	AMPCO 45
17	Locking Device	316 SS
18	Handle	316 SS
19	Packing Gland	A286 SS
20	Seat Gland	A286 SS
21	Body	316 CW SS
22	Set Screw, 1/2-13	300 Series SS
23	Hex Set Screw, 3/8-16	316 SS

Typical spare parts found in Repair Kits

3 Way Quarter/180º Turn Ball Type 3/16" to 1/2" Bore

Pressures to 20,000 psi (1380 bar)

3B3/3BD3, 3B6/3BD6, and 3B8/3BD8 Series

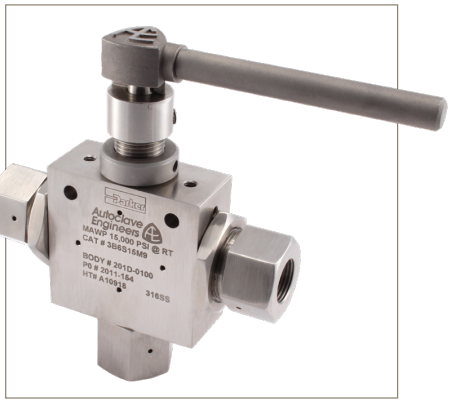

These ball valves can also be modified to incorporate the use of special materials, seals for high temperature applications, subsea models, and valve actuators. When it comes to high-pressure applications, these ball valves with the associated high-pressure components, provide the critical performance demanded by the high pressure market.

3 Way Ball Valve Features:

- One-piece, trunnion mounted style, stem design eliminates shear failure and reduces the effects of side loading found in two piece designs
- Re-torqueable seat glands for longer seat life
- Carbon filled PEEK seats offer excellent resistance to chemicals, heat, and wear/abrasion
- UNS S31600, 316 cold worked Stainless Steel construction
- Low friction pressure assisted graphite filled PTFE stem seal increases cycle life and reduces operating torque
- Available in 90° turn diverter and 180° turn switching models
- FKM (Viton®) o-rings are standard for operation from 0° to 400°F (-18° to 204°C)
- Optional o-rings available for high-temperature applications to 500°F (260°C)
- Optional wetted materials
- Wide selection of tube and pipe end fittings available
- Electric and pneumatic actuator options

3 Way Ball Valve Applications:

- Laboratories
- Test Stands
- Control Panels
- Pilot Plants
- Actuator Sequencing
- Oil & Gas Production

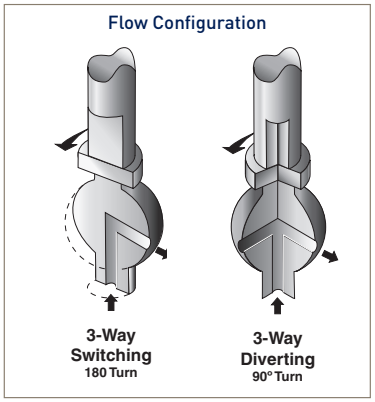

Tel: +45 63 12 83 00 | Email: ps@hymatik.com | www.hymatik.com | Hvidkaervej 27a, DK-5250 Odense SV, Denmark

3 Way Series: 3/16" (4.77mm) Orifice - Pressures to 20,000 psi (1379 bar)



Connection Type	MAWP** at Room Temperature	Minimum Orifice Inches (mm)	Rated Cv
SW250 (1/4" LP)	15,000 psi (1034 bar)	0.129 (3.28)	0.50
SW375 (3/8" LP)	15,000 psi (1034 bar)	0.188 (4.77)	0.50
SW500 (1/2" LP)	10,000 psi (690 bar)	0.188 (4.77)	0.50
SF250CX20 (1/4" MP)	20,000 psi (1379 bar)	0.109 (2.77)	0.50
SF375CX20 (3/8" MP)	20,000 psi (1379 bar)	0.188 (4.77)	0.50
F250C (1/4" HP)	20,000 psi (1379 bar)	0.094 (2.39)	0.33
F375C (3/8" HP)	20,000 psi (1379 bar)	0.125 (3.17)	0.33
1/4" FNPT	15,000 psi (1034 bar)	0.188 (4.77)	0.50
3/8" FNPT	15,000 psi (1034 bar)	0.188 (4.77)	0.50
QS250 (1/4" QSS)	15,000 psi (1034 bar)	0.157 (3.99	0.50
QS375 (3/8" QSS)	15,000 psi (1034 bar)	0.188 (4.77)	0.50

3/16" 3-Way Valve can be used for bi-directional flow, inlet pressure from side ports are limited to 15,000 psi maximum.

** Special materials often have reduced MAWP ratings, see Technical brochure for assistance

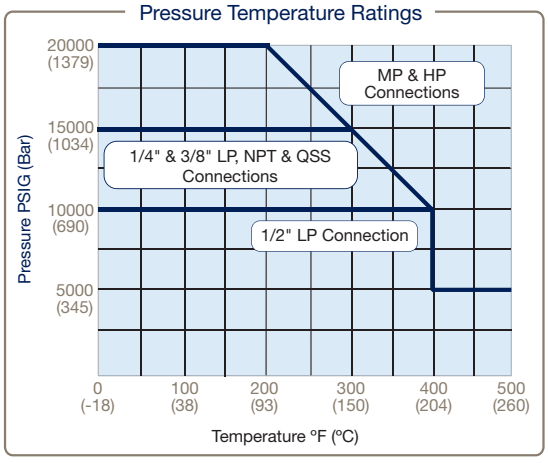

3 Way 3/16" Bore Ball Valve

Pressure Ratings are determined by the end connections chosen, see chart.
Maximum Temperature rating is determined by the o-ring material (see following description)
NPT connections are limited to 400°F max due to PTFE Sealant.

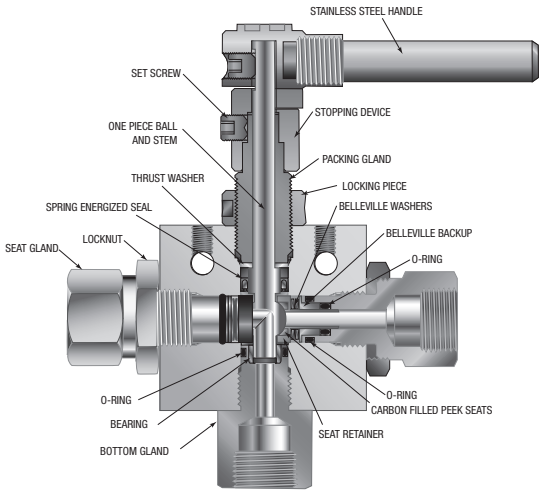

To ensure proper fit use Parker Autoclave tubing

NOTE: Critical gas applications such as Hydrogen or Helium are not recommended and should be evaluated on a case by case basis. Consult factory.

Diverter Flow Control:

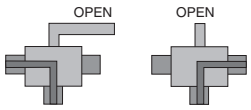

*3-Way Diverter Valve
90° Turn (3BD3 Series)

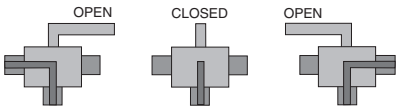

3-Way Switching Valve
180° Turn (3B3 Series)

*The Diverter Valve design permits inlet flow through the bottom port.
Outlet flow may be diverted to either valve side port with only a 90° turn.

Ordering Guide:

3-way ball valves are furnished complete with tube or pipe connections. Standard valve has FKM o-rings [400ºF (204ºC) maximum].

Building a Part Number: *Example: 3B3S20M6*

Example Part Number:	3B	3	S	20	M6	–	XXX
Ordering Parameters/Options:	Valve Series	Ball Orifice Diameter	Material	Pressure (x 1000 psi)	End Connection		Options
Table Reference: (see below)	A	B	C	D	E		F

A - Valve Series	
3B	3 Way Switching (Selector) Valve (180° Turn)
3BD	3 Way Diverter Valve (90° Turn)

B - Ball Orifice Diameter	
3	3/16" (4.77mm)

C - Base Material	
S	316 Cold Worked (non-NACE) Stainless Steel
S	2507 Super Duplex Wetted Material (needs "**F**" Material Code Suffix)
S	6 Moly (254-SMO) Material (needs "**F**" Material Code Suffix)
Additional Material Available, please contact factory.	

D - Pressure (x 1000 psi)	
10	10,000 psi (1/2" LP Connection)
15	15,000 psi (LP, NPT, and QS connections)
20	20,000 psi (MP and HP connections)
Maximum MAWP based on connection type or material (whichever is lower)	

Basic Repair Kits: (see page 28 for kit contents)
When ordering a basic repair kit add an "**R**" prefix before product model codes A, B, and C (see above). Example: R3B3S

When ordering with "**F-Options**" add an "**R**" prefix before model codes A, B, C and F (see above). Example: R3B3S-EPR Contact your Parker Autoclave Engineers Sales Representative with any questions or refer to the Operation & Maintenance manuals (found online at www.Autoclave.com) for proper maintenance procedures.

E - End Connection			
	Connection	MAWP @ RT	Seat Gland Hex
L4	SW250 (1/4" LP)	15,000 psi	1"
L6	SW375 (3/8" LP)	15,000 psi	1"
L8	SW500 (1/2" LP)	10,000 psi	1"
M4	SF250CX20 (1/4" MP)	20,000 psi	1"
M6	SF375CX20 (3/8" MP)	20,000 psi	1"
H4	F250C (1/4" HP)	20,000 psi	1"
H6	F375C (3/8" HP)	20,000 psi	1"
P4	1/4" FNPT	15,000 psi	1"
P6	3/8" FNPT	15,000 psi	1"

F - Options (Suffix addition)	
BO	O-ring, Buna-N 40° to 250°F (121°C)
EPR	O-ring, Ethylene Propylene Rubber, 0° to 250°F (121°C)
HT	O-ring, Perfluoroelastomer (Parofluor®) FFKM 30° to 500ºF (260ºC)
K	Antivibration Gland Fitting (Cone & Thread Only)
L	Lockout Bracket (see page 43 for detail)
SOG*	ALL Parts NACE material, hardness Check, NACE Certification
2507**	2507 Super Duplex (20,000 psi max.) used with "**S**" Material Code
25-4MO**	6 Moly (25-4SMO) Material (used with "**S**" material code)
PM	Panel Mount Hardware
For Ball Valve Actuator Options see chart below	

Notes:
316 SS Valve bodies are cold worked and not suitable for use in NACE/ISO 15156 applications. If required, contact factory for options.

* SOG suffix also changes CW 316 SS body material to Annealed 316 SS suitable for NACE service. Contact factory for pressure reduction.

** Special materials often have reduced MAWP ratings, see Technical brochure for assistance.

Ball Valve Actuator Suffix options: For Detailed Actuator Information please see pages 34-42

Pneumatic Actuator		Electric Actuator			Actuator Operating Temperature	
		WP	XP			
AO	Air to Open / Spring to Close (Diverter Style Only)	**EO1**	**EO1X**	120 volt AC 50/60 Hz	**Pneumatic**	-10ºF to 176ºF (-23ºC to 80ºC)
AC	Air to Close / Spring to Open (Diverter Style Only)	**EO2**	**EO2X**	220 volt AC 50/60 Hz	**Electric**	0ºF to 160ºF (-17ºC to 71ºC)
AOC	Air to Open and Close (Double Action)	**EO3***	**EO3X***	24 VDC		
* 24VDC Electric Actuator not available in 180° Actuation option (3B3 Series)						

See ball valve actuator section for full description, additional information, and options.additional information, and options.

Tel: +45 63 12 83 00 | Email: ps@hymatik.com | www.hymatik.com | Hvidkaervej 27a, DK-5250 Odense SV, Denmark

3 Way Series: 3/8" (9.52mm) Orifice - Pressures to 15,000 psi (1034 bar)



Connection Type	MAWP** at Room Temperature	Minimum Orifice Inches (mm)	Rated Cv
SW500 (1/2" LP)	10,000 psi (690 bar)	0.326 (8.28)	2.1
SF562CX20 (9/16" MP)	15,000 psi (1034 bar)	0.312 (7.92)	2.1
SF750CX10 (3/4" MP)	15,000 psi (1034 bar)	0.326 (8.28)	2.1
3/8" FNPT	15,000 psi (1034 bar)	0.326 (8.28)	2.1
1/2" FNPT	15,000 psi (1034 bar)	0.326 (8.28)	2.1
F562C (9/16" HP)	15,000 psi (1034 bar)	0.326 (8.28)	2.1
QS562 (9/16" QSS)	15,000 psi (1034 bar)	0.326 (8.28)	2.1

3/8" 3-Way Valve is designed for inlet pressure from bottom inlet position only.

** Special materials often have reduced MAWP ratings, see Technical brochure for assistance

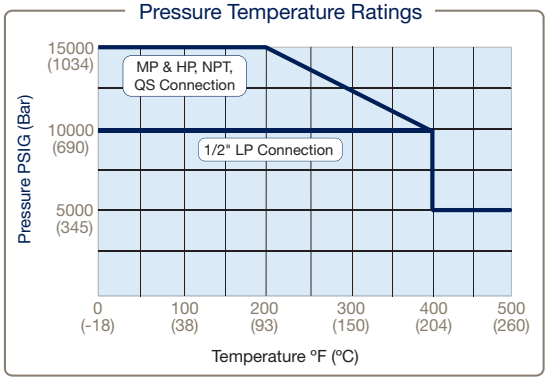

3 Way 3/8" Bore Ball Valve

Pressure Ratings are determined by the end connections chosen, see chart.
Maximum Temperature rating is determined by the o-ring material (see following description)
NPT connections are limited to 400°F max due to PTFE Sealant.

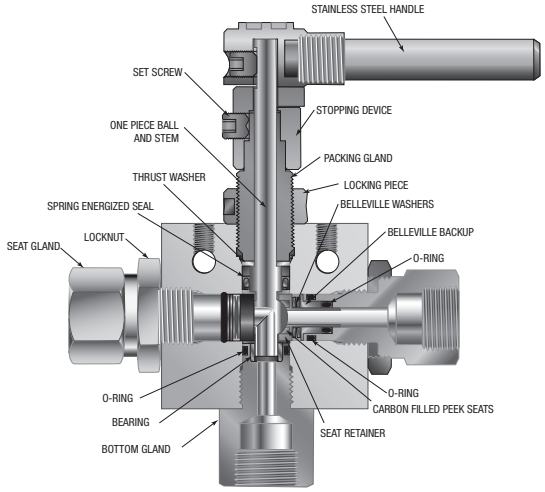

To ensure proper fit use Parker Autoclave tubing

NOTE: Critical gas applications such as Hydrogen or Helium are not recommended and should be evaluated on a case by case basis. Consult factory.

Diverter Flow Control:

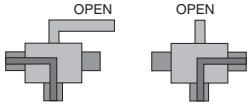

*3-Way Diverter Valve
90° Turn (3BD6 Series)

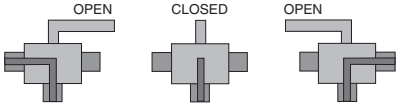

3-Way Switching Valve
180° Turn (3B6 Series)

*The Diverter Valve design permits inlet flow through the bottom port.
Outlet flow may be diverted to either valve side port with only a 90° turn.

Tel: +45 63 12 83 00 | Email: ps@hymatik.com | www.hymatik.com | Hvidkaervej 27a, DK-5250 Odense SV, Denmark

Ordering Guide:

3-way ball valves are furnished complete with tube or pipe connections. Standard valve has FKM o-rings [400ºF (204ºC) maximum].

Building a Part Number: *Example: 3B6S15M9*

Example Part Number:	3B	6	S	15	M9	–	XXX
Ordering Parameters/Options:	Valve Series	Ball Orifice Diameter	Material	Pressure (x 1000 psi)	End Connection		Options
Table Reference: (see below)	A	B	C	D	E		F

A - Valve Series	
3B	3 Way Switching (Selector) Ball Valve (180° Turn)
3BD	3 Way Diverter Valve (90° Turn)

B - Ball Orifice Diameter	
6	3/8" (9.52mm)

C - Base Material	
S	316 Cold Worked (non-NACE) Stainless Steel
S	2507 Super Duplex Wetted Material (needs "**F**" Material Code Suffix)
S	6 Moly (254-SMO) Material (needs "**F**" Material Code Suffix)
Additional Material Available, please contact factory.	

D - Pressure (x 1000 psi)	
10	10,000 psi (1/2" LP Connection)
15	15,000 psi
Maximum MAWP based on connection type or material (whichever is lower)	

Basic Repair Kits: (see page 28 for kit contents)
When ordering a basic repair kit add an "**R**" prefix before product model codes A, B, and C (see above). Example: R3B6S

When ordering with "**F-Options**" add an "**R**" prefix before model codes A, B, C and F (see above). Example: R3B6S-EPR Contact your Parker Autoclave Engineers Sales Representative with any questions or refer to the Operation & Maintenance manuals (found online at www.Autoclave.com) for proper maintenance procedures.

E - End Connection			
	Connection	MAWP @ RT	Seat Gland Hex
L8	SW500 (1/2" LP)	10,000 psi	1-3/8"
M9	SF562CX20 (9/16" MP)	15,000 psi	1-3/8"
M12	SF750CX10 (3/4" MP)	15,000 psi	1-3/8"
P4	1/4" FNPT	15,000 psi	1-3/8"
P6	3/8" FNPT	15,000 psi	1-3/8"
H9	F562C (9/16" HP)	15,000 psi	1-3/8"

F - Options (Suffix addition)	
BO	O-ring, Buna-N, 40° to 250°F (121°C)
EPR	O-ring, Ethylene Propylene Rubber, 0° to 250°F (121°C)
HT	O-ring, Perfluoroelastomer (Parofluor®) FFKM 30° to 500ºF (260ºC)
K	Antivibration Gland Fitting (Cone & Thread Only)
L	Lockout Bracket (see page 43 for detail)
SOG*	ALL Parts NACE material, hardness Check, NACE Certification
2507**	2507 Super Duplex (20,000 psi max.) used with "**S**" Material Code
25-4MO**	6 Moly (25-4SMO) Material (used with "**S**" material code)
PM	Panel Mount Hardware
For Ball Valve Actuator Options see chart below	

Notes:
316 SS Valve bodies are cold worked and not suitable for use in NACE/ISO 15156 applications. If required, contact factory for options.

* SOG suffix also changes CW 316 SS body material to Annealed 316 SS suitable for NACE service. Contact factory for pressure reduction.

** Special materials often have reduced MAWP ratings, see Technical brochure for assistance.

Ball Valve Actuator Suffix options: For Detailed Actuator Information please see pages 34-42

Pneumatic Actuator		Electric Actuator			Actuator Operating Temperature	
		WP	XP			
AO	Air to Open / Spring to Close (Diverter Style Only)	**EO1**	**EO1X**	120 volt AC 50/60 Hz	**Pneumatic**	-10ºF to 176ºF (-23ºC to 80ºC)
AC	Air to Close / Spring to Open (Diverter Style Only)	**EO2**	**EO2X**	220 volt AC 50/60 Hz	**Electric**	0ºF to 160ºF (-17ºC to 71ºC)
AOC	Air to Open and Close (Double Action)	**EO3***	**EO3X***	24 VDC		
* 24VDC Electric Actuator not available in 180° Actuation option (3B6 Series)						

See ball valve actuator section for full description, additional information, and options

Tel: +45 63 12 83 00 | Email: ps@hymatik.com | www.hymatik.com | Hvidkaervej 27a, DK-5250 Odense SV, Denmark

3 Way Series: 1/2" (12.7mm) Orifice - Pressures to 10,000 psi (690 bar)

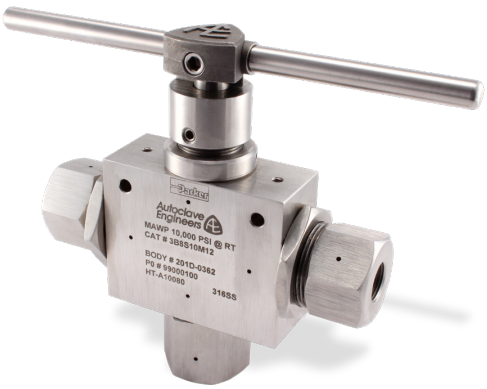

Connection Type	MAWP** at Room Temperature	Minimum Orifice Inches (mm)	Rated C_V
SF750CX20 (3/4" MP)	10,000 psi (690 bar)	0.500 (12.70)	4.4
SF1000CX20 (1" MP)	10,000 psi (690 bar)	0.500 (12.70)	4.4
3/4" FNPT	10,000 psi (690 bar)	0.500 (12.70)	4.4
1" FNPT	10,000 psi (690 bar)	0.500 (12.70)	4.4
QS750 (3/4" QSS)	10,000 psi (690 bar)	0.500 (12.70)	4.4
QS1000 (1" QSS)	10,000 psi (690 bar)	0.500 (12.70)	4.4

1/2" 3-Way Valve can be used for bi-directional flow, inlet pressure from side ports can be up to 10,000 psi maximum.

** Special materials often have reduced MAWP ratings, see Technical brochure for assistance

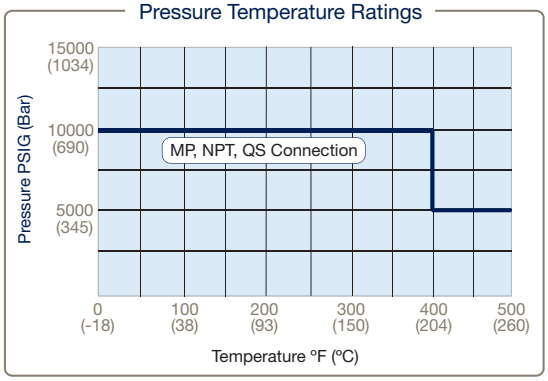

3 Way 1/2" Bore Ball Valve

Pressure Ratings are determined by the end connections chosen, see chart.
Maximum Temperature rating is determined by the o-ring material (see following description)
NPT connections are limited to 400°F max due to PTFE Sealant.

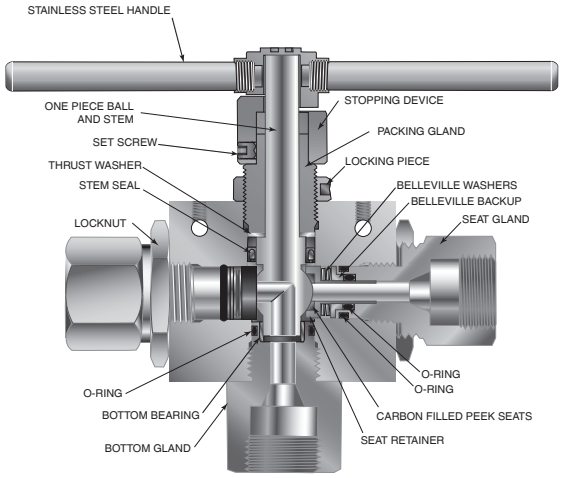

To ensure proper fit use Parker Autoclave tubing

NOTE: Critical gas applications such as Hydrogen or Helium are not recommended and should be evaluated on a case by case basis. Consult factory.

Diverter Flow Control:

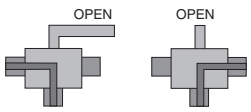

*3-Way Diverter Valve
90° Turn (3BD8 Series)

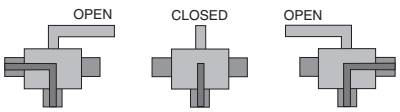

3-Way Switching Valve
180° Turn (3B8 Series)

*The Diverter Valve design permits inlet flow through the bottom port.
Outlet flow may be diverted to either valve side port with only a 90° turn.

Ordering Guide:

3-way ball valves are furnished complete with tube or pipe connections. Standard valve has FKM o-rings [400ºF (204ºC) maximum].

Building a Part Number: *Example: 3B8S10M12*

Example Part Number:	3B	8	S	10	M12	–	XXX
Ordering Parameters/Options:	Valve Series	Ball Orifice Diameter	Material	Pressure (x 1000 psi)	End Connection		Options
Table Reference: (see below)	A	B	C	D	E		F

A - Valve Series	
3B	3 Way Switching (Selector) Valve, 180° Turn
3BD	3 Way Diverter Valve (90° Turn)

B - Ball Orifice Diameter	
8	1/2" (12.7mm)

C - Base Material	
S	316 Cold Worked (non-NACE) Stainless Steel
S	2507 Super Duplex Wetted Material (needs "**F**" Material Code Suffix)
S	6 Moly (254-SMO) Material (needs "**F**" Material Code Suffix)
Additional Material Available, please contact factory.	

D - Pressure (x 1000 psi)	
10	10,000 psi
Maximum MAWP based on connection type or material (whichever is lower)	

Basic Repair Kits: (see page 28 for kit contents)
When ordering a basic repair kit add an "**R**" prefix before product model codes A, B, and C (see above). Example: R3B8S

When ordering with "**F-Options**" add an "**R**" prefix before model codes A, B, C and F (see above). Example: R3B8S-EPR Contact your Parker Autoclave Engineers Sales Representative with any questions or refer to the Operation & Maintenance manuals (found online at www.Autoclave.com) for proper maintenance procedures.

E - End Connection			
	Connection	MAWP @ RT	Seat Gland Hex
M12	SF750CX10 (3/4" MP)	10,000 psi	1-3/4"
M16	SF1000CX10 (1" MP)	10,000 psi	1-3/4"
P12	3/4" FNPT	10,000 psi	1-3/4"
P16	1" FNPT	10,000 psi	1-3/4"

F - Options (Suffix addition)	
BO	O-ring, Buna-N 40° to 250°F (121°C)
EPR	O-ring, Ethylene Propylene Rubber, 0° to 250°F (121°C)
HT	O-ring, Perfuoroelastomer (Parofluor®) FFKM 30° to 500°F (260°C)
K	Antivibration Gland Fitting (Cone & Thread Only)
L	Lockout Bracket (see page 43 for detail)
SOG*	ALL Parts NACE material, hardness Check, NACE Certification
2507**	2507 Super Duplex (20,000 psi max.) used with "**S**" Material Code
25-4MO**	6 Moly (25-4SMO) Material (used with "**S**" material code)
PM	Panel Mount Hardware
For Ball Valve Actuator Options see chart below	

Notes:
316 SS Valve bodies are cold worked and not suitable for use in NACE/ISO 15156 applications. If required, contact factory for options.

* SOG suffix also changes CW 316 SS body material to Annealed 316 SS suitable for NACE service. Contact factory for pressure reduction.

** Special materials often have reduced MAWP ratings, see Technical brochure for assistance.

Ball Valve Actuator Suffix options: For Detailed Actuator Information please see pages 34-42

Pneumatic Actuator		Electric Actuator			Actuator Operating Temperature	
		WP	XP			
AO	Air to Open / Spring to Close (Diverter Style Only)	**EO1**	**EO1X**	120 volt AC 50/60 Hz	**Pneumatic**	-10ºF to 176ºF (-23ºC to 80ºC)
AC	Air to Close / Spring to Open (Diverter Style Only)	**EO2**	**EO2X**	220 volt AC 50/60 Hz	**Electric**	0ºF to 160ºF (-17ºC to 71ºC)
AOC	Air to Open and Close (Double Action)	**EO3***	**EO3X***	24 VDC		
* 24VDC Electric Actuator not available in 180° Actuation option (3B8 Series)						

See ball valve actuator section for full description, additional information, and options

Tel: +45 63 12 83 00 | Email: ps@hymatik.com | www.hymatik.com | Hvidkaervej 27a, DK-5250 Odense SV, Denmark

3 Way Ball Valve Dimensions:

3 Way Ball Valve

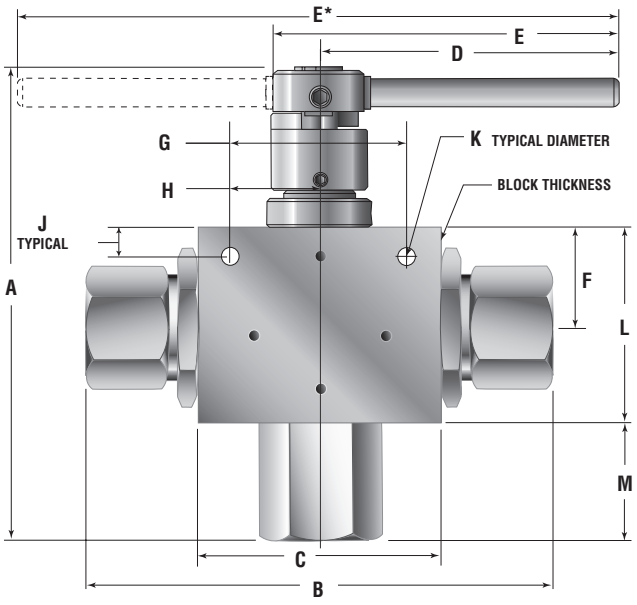

	VALVE MODELS - inches (mm)		
	3B3S / 3BD3S	3B6S / 3BD6S	3B8S / 3BD8S
A	5.66 (143.76)	6.55 (166.37)	7.82 (198.63)
B	4.72 (119.94)	5.74 (145.79)	7.77 (197.36)
C	2.50 (63.50)	3.00 (76.20)	4.13 (104.78)
D	3.37 (85.55)	4.99 (126.82)	5.09 (129.29)
E	3.90 (99.02)	5.52 (140.32)	10.18* (258.57)
F	1.13 (28.58)	1.38 (34.92)	1.66 (42.16)
G	1.50 (38.10)	2.00 (50.80)	3.00 (76.20)
H	0.75 (19.05)	1.00 (25.40)	1.50 (38.10)
J	0.43 (10.92)	0.41 (10.31)	0.50 (12.70)
K	0.28 (7.11)	0.28 (7.11)	0.28 (7.11)
L	2.26 (57.40)	2.88 (73.03)	3.34 (84.94)
M	0.97 (24.64)	1.19 (30.22)	1.69 (42.93)
Block Thickness	1.00 (25.40)	1.38 (35.05)	1.75 (44.45)

Panel Mounting Dimensions:

3 Way Ball Valve Panel Mounting

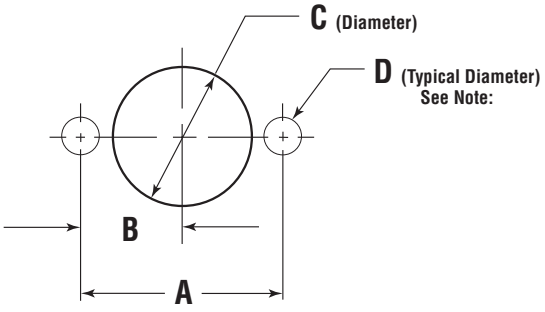

All dimensions are for reference only and are subject to change without notice.

	VALVE MODELS - inches (mm)		
	3B3S / 3BD3S	3B6S / 3BD6S	3B8S / 3BD8S
A	1.50 (38.10)	2.00 (50.80)	3.00 (76.20)
B	0.75 (19.05)	1.00 (25.40)	1.50 (38.10)
C	1.06 (26.92)	1.50 (38.10)	1.88 (47.63)
D	0.28 (7.11)	0.28 (7.11)	0.28 (7.11)

Note: Body Mounting 1/4" - 20 threads

Parts Listing and Material: Typical 3 Way Ball Valve Series

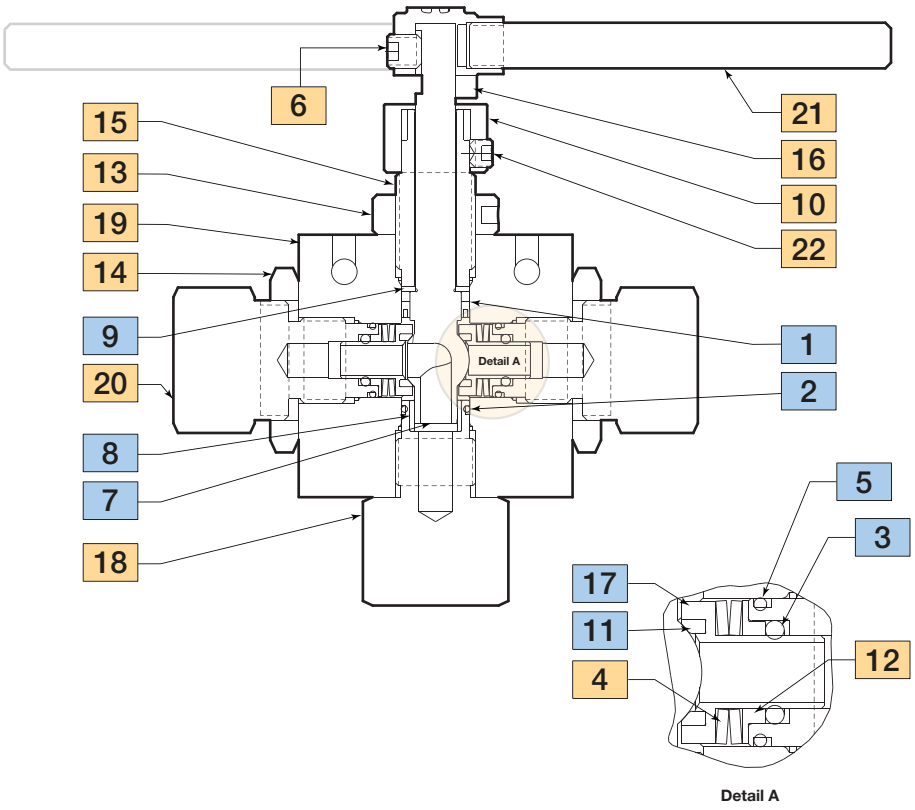

Material of Construction:

Item #	Description	Material
1	Stem Seal w/ Spring	PTFE w/ Graphite
2	O-Ring	FKM
3	O-Ring	FKM
4	Belleville Washer	17-7PH
5	O-Ring	90 Duro FKM
6	Set Screw, 3/8-16	316 CW SS
7	Stem	316 CW SS
8	Bottom Bearing	AMPCO 45
9	Thrust Washer	AMPCO 45
10	Stopping Device	316 SS
11	Seat Retainer	15-5 PH

Item #	Description	Material
12	Belleville Washer Backup	316 CW SS
13	Locking Piece	316 SS
14	Locknut	316 SS
15	Packing Gland	316 CW SS
16	Handle Hub	316 SS
17	Seat	PEEK
18	Bottom Gland	316 CW SS
19	Body	316 CW SS
20	Seat Gland	316 CW SS
21	Handle	304 SS
22	Set Screw, 5/16-24	Stainless

Typical spare parts found in Repair Kits

4 Way Quarter/180º Turn Ball Type 3/8" Bore

Pressures to 10,000 psi (690 bar)

4B6 and 4BS6 Series

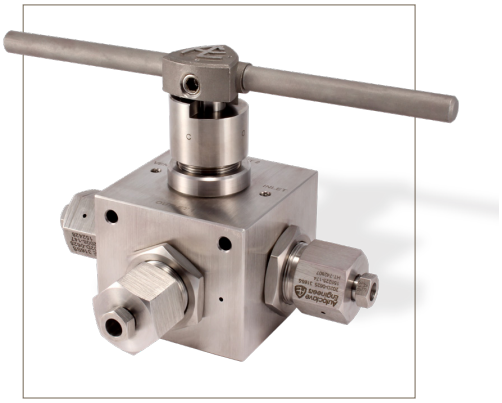

These ball valves can also be modified to incorporate the use of special materials, seals for high temperature applications, subsea models, and valve actuators. When it comes to high-pressure applications, these ball valves with the associated high-pressure components, provide the critical performance demanded by the high pressure market.

4 Way Ball Valve Features:

- One-piece, trunnion mounted style, stem design eliminates shear failure and reduces the effects of side loading found in two piece designs
- Re-torqueable seat glands for longer seat life
- Carbon filled PEEK seats offer excellent resistance to chemicals, heat, and wear/abrasion
- UNS S31600, 316 cold worked Stainless Steel construction
- Low friction pressure assisted graphite filled PTFE stem seal increases cycle life and reduces operating torque
- Quarter turn crossover, and 180° turn four way switching models available
- FKM (Viton®) o-rings are standard for operation from 0° to 400°F (-18° to 204°C)
- Optional o-rings available for high-temperature applications to 500°F (260°C)
- Optional wetted materials
- Electric and pneumatic actuator options

4 Way Ball Valve Applications:

- Laboratories
- Test Stands
- Control Panels
- Pilot Plants
- Chemical/Petrochemical
- Oil & Gas Production

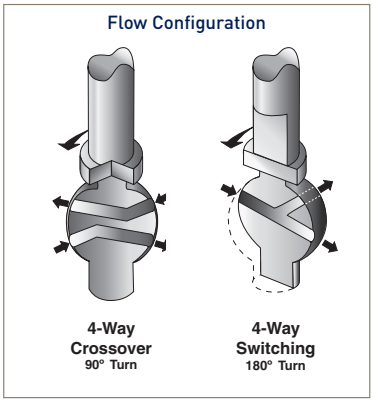

Tel: +45 63 12 83 00 | Email: ps@hymatik.com | www.hymatik.com | Hvidkaervej 27a, DK-5250 Odense SV, Denmark

4 Way Series: 3/8" (9.52mm) Orifice - Pressures to 10,000 psi (690 bar)

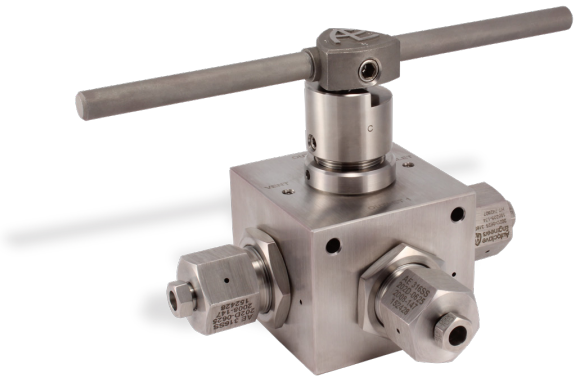

Connection Type	MAWP** at Room Temperature	Minimum Orifice Inches (mm)	Rated Cv*
SW500 (1/2" LP)	10,000 psi (690 bar)	0.375 (9.52)	2.5
SF375CX20 (3/8" MP)	10,000 psi (690 bar)	0.203 (5.16)	1.6
SF562CX20 (9/16" MP)	10,000 psi (690 bar)	0.312 (7.92)	2.4
SF750CX10 (3/4" MP)	10,000 psi (690 bar)	0.375 (9.52)	2.5
3/8 FNPT	10,000 psi (690 bar)	0.375 (9.52)	2.5
1/2 FNPT	10,000 psi (690 bar)	0.375 (9.52)	2.5
QS562 (9/16" QSS)	10,000 psi (690 bar)	0.359 (9.12)	2.5

** Special materials often have reduced MAWP ratings, see Technical brochure for assistance

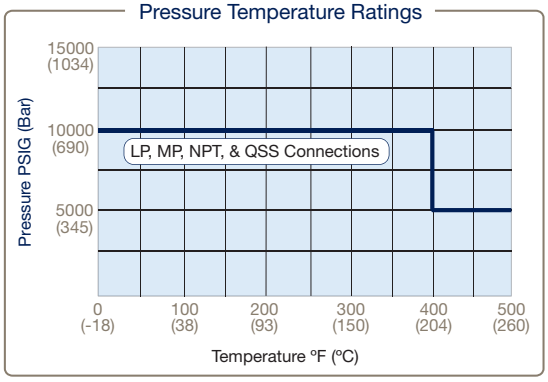

4 Way 3/8" Bore Ball Valve

Pressure Ratings are determined by the end connections chosen, see chart.
Maximum Temperature rating is determined by the o-ring material (see following description)
NPT connections are limited to 400°F max due to PTFE Sealant.

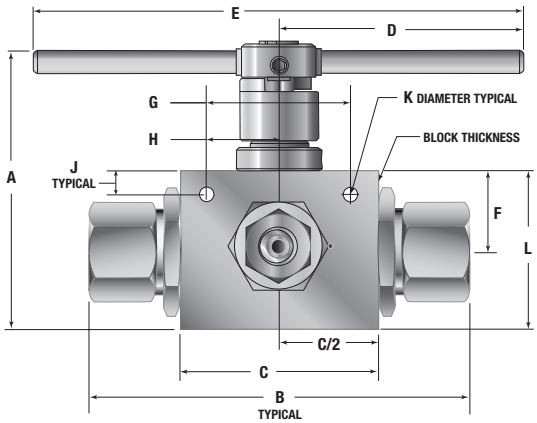

To ensure proper fit use Parker Autoclave tubing

NOTE: Critical gas applications such as Hydrogen or Helium should be evaluated on a case by case basis. Consult factory.

Diverter Flow Control:

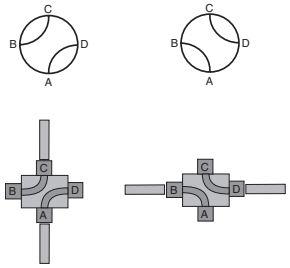

4 Way Crossover
90° Turn (4B6 Series)

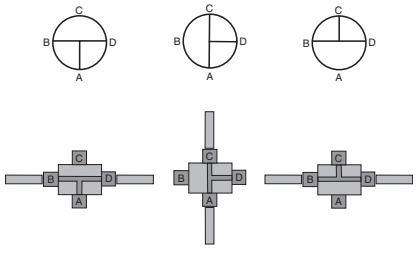

4-Way Switching
180° Turn (4BS6 Series)
(supplied with "D" port plugged)

Tel: +45 63 12 83 00 | Email: ps@hymatik.com | www.hymatik.com | Hvidkaervej 27a, DK-5250 Odense SV, Denmark

Ordering Guide:

4-way ball valves are furnished complete with tube or pipe connections. Standard valve has FKM o-rings [400ºF (204ºC) maximum].

Building a Part Number: *Example: 4B6S10M9*

Example Part Number:	4B	6	S	10	M9	–	XXX
Ordering Parameters/Options:	Valve Series	Ball Orifice Diameter	Material	Pressure (x 1000 psi)	End Connection		Options
Table Reference: (see below)	A	B	C	D	E		E

A - Valve Series	
4B	4 Way Ball Valve Crossover (90° Turn)
4BS	4 Way Ball Valve Switching (1800° Turn)

B - Ball Orifice Diameter	
6	3/8" (9.52mm)

C - Base Material	
S	316 Cold Worked (non-NACE) Stainless Steel
Additional Material Available, please contact factory.	

D - Pressure (x 1000 psi)	
10	10,000 psi
Maximum MAWP based on connection type or material (whichever is lower)	

Basic Repair Kits: (see page 33 for kit contents)
When ordering a basic repair kit add an "**R**" prefix before product model codes A, B, and C (see above). Example: R4B6S

When ordering with "**F-Options**" add an "**R**" prefix before model codes A, B, C and F (see above). Example: R4BS6S-EPR Contact your Parker Autoclave Engineers Sales Representative with any questions or refer to the Operation & Maintenance manuals (found online at www.Autoclave.com) for proper maintenance procedures.

E - End Connection			
	Connection	MAWP @ RT	Seat Gland Hex
L8	SW500 (1/2" LP)	10,000 psi	1-3/8"
M6	SF375CX20 (3/8" MP)	10,000 psi	1-3/8"
M9	SF562CX20 (9/16"MP)	10,000 psi	1-3/8"
M12	SF750CX10 (3/4"MP)	10,000 psi	1-3/8"
P6	3/8" FNPT	10,000 psi	1-3/8"
P8	1/2" FNPT	10,000 psi	1-3/8"

F - Options (Suffix addition)	
BO	O-ring, Buna-N 40° to 250°F (121°C)
EPR	O-ring, Ethylene Propylene Rubber, 0° to 250°F (121°C)
HT	O-ring, Perfluoroelastomer (Parofluor®) FFKM 30° to 500°F (260°C)
K	Antivibration Gland Fitting (Cone & Thread Only)
L	Lockout Bracket (see page 43 for detail)
SOG*	ALL Parts NACE material, hardness Check, NACE Certification
PM	Panel Mount Hardware
For Ball Valve Actuator Options see chart below	

Notes:
316 SS Valve bodies are cold worked and not suitable for use in NACE/ISO 15156 applications. If required, contact factory for options.

* SOG suffix also changes CW 316 SS body material to Annealed 316 SS suitable for NACE service. Contact factory for pressure reduction.

** Special materials often have reduced MAWP ratings, see Technical brochure for assistance.

Ball Valve Actuator Suffix options: For Detailed Actuator Information please see pages 34-42

Pneumatic Actuator		Electric Actuator			Actuator Operating Temperature	
		WP	XP			
AO	Air to Open / Spring to Close (Diverter Style Only)	**EO1**	**EO1X**	120 volt AC 50/60 Hz	**Pneumatic**	-10ºF to 176ºF (-23ºC to 80ºC)
AC	Air to Close / Spring to Open (Diverter Style Only)	**EO2**	**EO2X**	220 volt AC 50/60 Hz	**Electric**	0ºF to 160ºF (-17ºC to 71ºC)
AOC	Air to Open and Close (Double Action)	**EO3***	**EO3X***	24 VDC		
* 24VDC Electric Actuator not available in 180° Actuation option (4B8 Series)						

See ball valve actuator section for full description, additional information, and options.

4 Way Ball Valve Dimensions:

4 Way Ball Valve

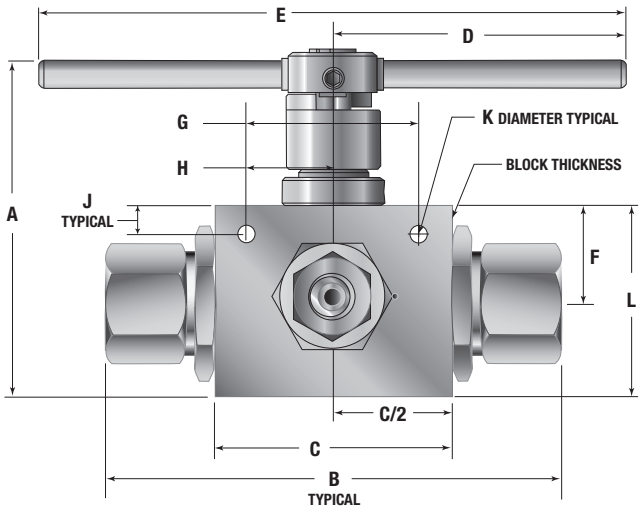

	VALVE MODELS inches (mm)
	4B6S / 4BS6S
A	5.81 (147.57)
B	6.79 (172.47)
C	3.50 (88.90)
D	5.12 (130.05)
E	10.24 (260.10)
F	1.63 (41.23)
G	2.63 (66.68)
H	1.31 (33.27)
J	0.41 (10.32)
K	0.28 (7.11)
L	2.97 (75.39)
Block Thickness	3.50 (88.90)

Panel Mounting Dimensions:

4 Way Ball Valve Panel Mounting

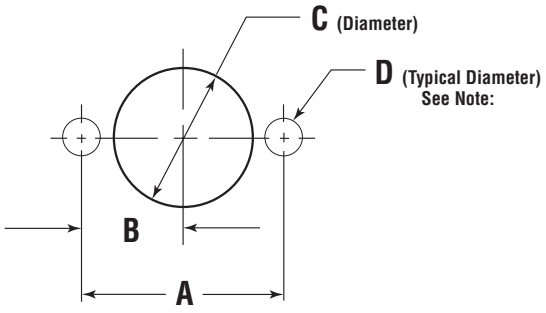

All dimensions are for reference only and are subject to change without notice.

	VALVE MODELS inches (mm)
	4B6S / 4BS6S
A	2.63 (66.68)
B	1.31 (33.34)
C	1.88 (47.63)
D	0.28 (7.11)

Note: Body Mounting 1/4" - 20 threads

Parts Listing and Material: Typical 4 Way Ball Valve Series

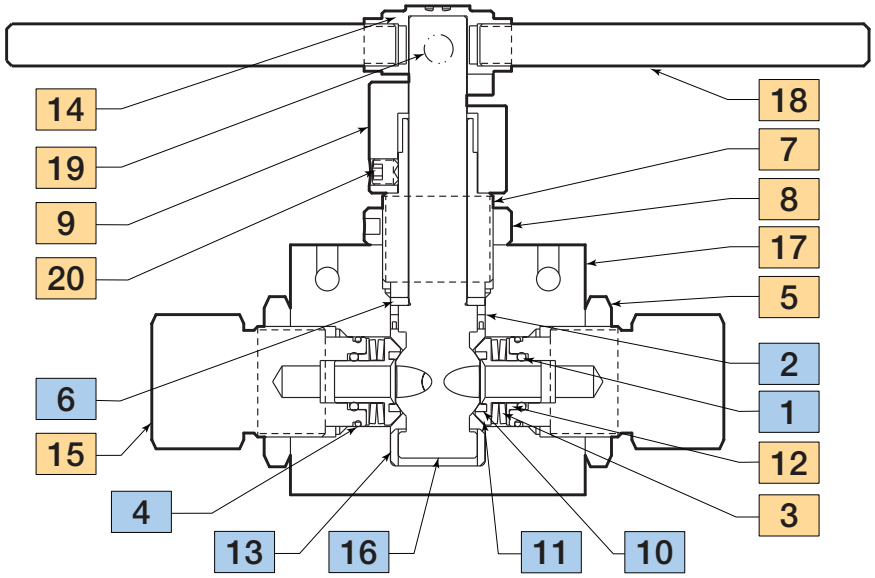

Material of Construction:

Item #	Description	Material
1	O-Ring	FKM
2	Stem Seal w/ Spring	PTFE with Graphite
3	Belleville Washer	17-7PH
4	O-Ring	FKM
5	Locknut	316 SS
6	Thrust Washer	AMPCO 45
7	Packing Gland	316 CW SS
8	Locking Piece	316 SS
9	Stopping Device	316 SS
10	Seat	ARLON 1260

Item #	Description	Material
11	Seat Retainer	Nitronic 50 HC
12	Belleville Washer Backup	316 CW SS
13	Bottom Bearing	AMPCO 45
14	Handle Hub	316 SS
15	Seat Gland	316 CW SS
16	Stem	316 CW SS
17	Body	316 CW SS
18	Handle	304 SS
19	Hex Set Screw, 1/2-13	Stainless
20	Set Screw, 5/16-18	Stainless

Typical spare parts found in Repair Kits

Ball Valve Actuators

Pneumatic and Electric

Single and Double Acting Pneumatic
24VDC, 120 and 220 VAC Electric



Principle of Operation:

Pneumatic and Electric Actuators

Pneumatic ball valve actuators found on pages 35-42 and are available for every bore/size option we offer (90° or 180° as needed). Our standard weather-proof housing is corrosion resistant anodized aluminum, Stainless Steel materials are available. CE Marked and SIL3 rated.

Parker Autoclave Engineers offers an ISO 5211 compliant pneumatic actuator with mounting configuration for NAMUR solenoid valves, limit switches or positioner as standard. Electric actuators (pages 37-42) are available in Weather-proof or Explosion-proof styles depending on location. Both varieties come standard with two (15 amp SPDT) position switches (SPDT). Explosionproof version includes an external handwheel for manual operation.

Ball Valve Actuators Features:

Pneumatic

- Temperature Range of 0° to 176°F (-18° to 80°C)with Buna-N Nitrile Seals
- Air-to-open/spring-to-close
- Air-to-close/spring-to-open
- Air-to-open and close (double acting)
- Visual Postion Indication as Standard, Limit switches
- Anodized Aluminum Weather-proof housing as standard
- Stainless steel housing for corrosive atmoshperes can be ordered
- Extended Temperature operation with Silicone Seals from 0° to 300°F (-18° to 150°C)
- CE Marked, SIL_3 Rated

Electric

- Interface with control systems for automated operation and monitoring
- Weather-Proof NEMA 4X Polyester Housing Standard, 0° to 160°F (-18° to 70°C)
- 120 & 220 VAC, 50/60 Hz standard
- 24VDC
- Explosion-Proof, NEMA 7X Enclosure available
- CE mark available

Tel: +45 63 12 83 00 | Email: ps@hymatik.com | www.hymatik.com | Hvidkaervej 27a, DK-5250 Odense SV, Denmark

Actuators: Pneumatic Operated Ball Valves (AO and AC)

90° Actuation/Spring Return

Valve Series*	Dimension Data - Inches (mm)										Actuator Weight .lbs	Air Usage
	A	B	C	D	E	F	G	H	I	J		Turn Time/90°
2B4-AO/AC	6.85 (173.99)	3.20 (81.28)	2.50 (63.50)	1.25 (31.75)	1.00 (25.40)	0.50 (12.70)	0.28 (7.11)	1.30 (33.02)	2.50 (63.50)	1.88 (47.75)	3.94	11.2 in³
												0.5 sec
2B6-AO/AC	7.28 (184.91)	3.86 (98.04)	3.00 (76.20)	1.50 (38.10)	1.50 (38.10)	0.75 (19.05)	0.34 (8.63)	1.59 (40.39)	3.00 (76.20)	2.10 (53.54)	6.0	18.1 in³
												1.0 sec
2B8-AO/AC	9.38 (238.25)	4.62 (117.35)	3.00 (76.20)	1.50 (38.10)	2.00 (50.80)	1.00 (25.40)	0.53 (13.46)	2.00 (50.80)	3.00 (76.20)	2.48 (62.99)	10.7	40.6 in³
												1.0 sec
2B12-AO/AC	17.30 (439.42)	8.00 (203.20)	5.00 (127.00)	2.50 (63.50)	3.25 (82.55)	1.63 (41.40)	0.53 (13.46)	3.54 (89.92)	5.00 (127.00)	3.57 (90.68)	53.8	256.3 in³
												3.0 sec
2B16-AO/AC	17.30 (439.42)	8.00 (203.20)	5.00 (127.00)	2.50 (63.50)	3.25 (82.55)	1.63 (41.40)	0.53 (13.46)	3.54 (89.92)	5.00 (127.00)	3.57 (90.68)	53.8	11.2 in³
												3.0 sec
3BD3-AO/AC	6.85 (173.99)	3.20 (81.28)	2.50 (63.50)	1.25 (31.75)	1.00 (25.40)	0.50 (12.70)	0.28 (7.11)	1.30 (33.02)	2.50 (63.50)	1.88 (47.75)	3.94	18.1 in³
												0.5 sec
3BD6-AO/AC	7.28 (184.91)	3.86 (98.04)	3.00 (76.20)	1.50 (38.10)	1.50 (38.10)	0.75 (19.05)	0.34 (8.63)	1.59 (40.39)	3.00 (76.20)	2.10 (53.54)	6.0	18.1 in³
												1.0 sec
3BD8-AO/AC	9.38 (238.25)	4.62 (117.35)	3.00 (76.20)	1.50 (38.10)	2.00 (50.80)	1.00 (25.40)	0.53 (13.46)	2.00 (50.80)	3.00 (76.20)	2.48 (62.99)	10.7	40.6 in³
												1.5 sec
4B6-AO/AC	9.38 (238.25)	4.62 (117.35)	3.00 (76.20)	1.50 (38.10)	2.00 (50.80)	1.00 (25.40)	0.53 (13.46)	2.00 (50.80)	3.00 (76.20)	2.48 (62.99)	10.7	40.6 in³
												1.5 sec

* Add the suffix **-AO** or **-AC** to the appropriate valve catalog number for a complete valve assembly.
Actuators do not have repair kits and must be returned to factory for repair.

SPECIFICATIONS:

- Control Air Pressure: 80 to 150 psi (6 to 10 bar)
- 1/4" NPT female air connector
- **AO**: Air to open/spring to close
- **AC**: Air to close/spring to open
- Actuators operating temperature: -10°F to 176°F (-23°C to 80°C)
- High temperature actuator option available, consult factory
- Stainless steel housing actuator models available, consult factory
- Actuators available with limit switches and visual indicators.
- Corrosion resistant anodized aluminum housing.
- Meets ISO 5211 Solenoid Mounting dimensions
- CE Marked, SIL3 Rated

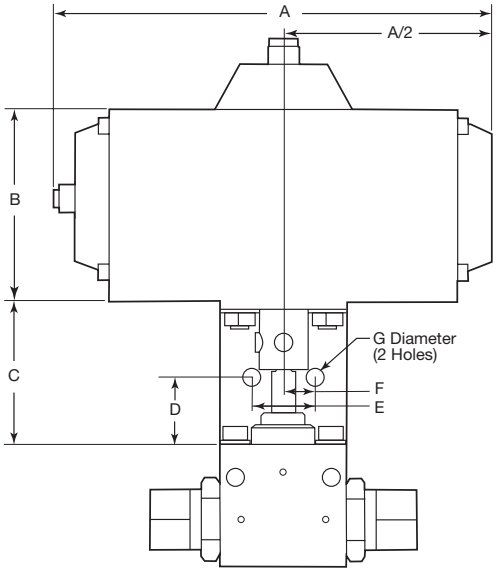

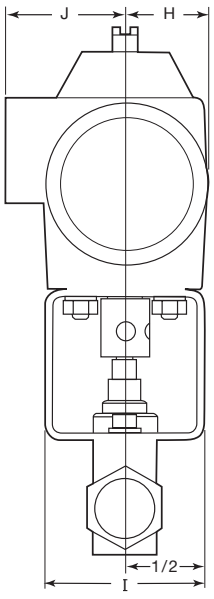

Tel: +45 63 12 83 00 | Email: ps@hymatik.com | www.hymatik.com | Hvidkaervej 27a, DK-5250 Odense SV, Denmark

Actuators: Pneumatic Operated Ball Valves (AOC - Double Acting)

90° and 180° Actuation - No Spring

Valve Series*	Dimension Data - Inches (mm)										Actuator Weight .lbs	Air Usage
	A	B	C	D	E	F	G	H	I	J		Turn Time/90°
2B4-AOC	6.85 (173.99)	3.20 (81.28)	2.50 (63.50)	1.25 (31.75)	1.00 (25.40)	0.50 (12.70)	0.28 (7.11)	1.30 (33.02)	2.50 (63.50)	1.88 (47.75)	3.52	25.6 in³ 0.5 sec
2B6-AOC	6.85 (173.99	3.20 (81.28)	3.00 (76.20)	1.50 (38.10)	1.50 (38.10)	0.75 (19.05)	0.34 (8.63)	1.30 (33.02)	2.50 (63.50)	1.88 (47.75)	5.17	44.4 in³ 05. sec
2B8-AOC	7.28 (184.91)	3.86 (98.04)	3.00 (76.20)	1.50 (38.10)	2.00 (50.80)	1.00 (25.40)	0.53 (13.46)	1.59 (40.39)	3.00 (76.20)	2.10 (53.34)	9.13	88.9 in³ 1.0 sec
2B12-AOC	11.82 (300.23)	6.10 (154.94)	5.00 (127.00)	2.50 (63.50)	3.25 (82.55)	1.63 (41.40)	0.53 (13.46)	2.55 (64.77)	5.00 (127.00)	2.55 (64.77)	44.1	565.5 in³ 2.5 sec
2B16-AOC	13.98 (355.09)	6.56 (166.62)	5.00 (127.00)	2.50 (63.50)	3.25 (82.55)	1.63 (41.40)	0.53 (13.46)	2.86 (72.64)	5.00 (127.00)	2.95 (74.93)	44.1	565.5 in³ 2.5 sec
3B3-AOC	9.50 (241.30)	3.59 (91.19)	2.50 (63.50)	1.25 (31.75)	1.00 (25.40)	0.50 (12.70)	0.28 (7.11)	1.37 (34.80)	2.50 (63.50)	1.98 (50.29)	3.52	42.5 in³ 1.0 sec
3B6-AOC	9.50 (241.30)	3.59 (90.19)	3.00 (76.20)	1.50 (38.10)	1.50 (38.10)	0.75 (19.05)	0.34 (8.63)	1.36 (34.54)	3.00 (76.20)	1.99 (50.55)	5.17	77.3 in³ 1.0 sec
3B8-AOC	10.21 (259.33)	4.47 (113.54)	3.00 (76.20)	1.50 (38.10)	2.00 (50.80)	1.00 (25.40)	0.53 (13.46)	1.67 (42.42)	3.00 (76.20)	2.10 (53.34)	9.13	150.0 in³ 2.0 sec
3BD3-AOC	6.85 (173.99)	3.20 (81.28)	2.50 (63.50)	1.25 (31.75)	1.00 (25.40)	0.50 (12.70)	0.28 (7.11)	1.30 (33.02)	2.50 (63.50)	1.88 (47.75)	3.53	25.6 in³ 0.5 sec
3BD6-AOC	6.85 (173.99)	3.20 (81.28)	3.00 (76.20)	1.50 (38.10)	1.50 (38.10)	0.75 (19.05)	0.34 (8.63)	1.30 (33.02)	3.00 (76.20)	1.88 (47.75)	5.17	44.4 in³ 0.5 sec
3BD8-AOC	7.28 (184.91)	3.86 (98.04)	3.00 (76.20)	1.50 (38.10)	2.00 (50.80)	1.00 (25.40)	0.53 (13.46)	1.59 (40.39)	3.00 (76.20)	2.10 (53.34)	9.13	88.9 in³ 1.0 sec
4B6-AOC	7.28 (184.91)	3.86 (98.04)	3.00 (76.20)	1.50 (38.10)	2.00 (50.80)	1.00 (25.40)	0.53 (13.46)	1.59 (40.39)	3.00 (76.20)	2.10 (53.34)	9.13	88.9 in³ 1.0 sec

* Add the suffix **-AOC** to the appropriate valve catalog number for a complete valve assembly
Actuators do not have repair kits and must be returned to factory for repair.

SPECIFICATIONS:

- Control Air Pressure: 80 to 150 psi (6 to 10 bar)
- 1/4" NPT female air connector
- **AOC**: Air to open/Air to close (double acting)
- Actuators operating temperature: -10°F to 176°F (-23°C to 80°C)
- Corrosion resistant anodized aluminum housing
- Stainless steel housing actuator models available, consult factory
- Actuators available with limit switches and visual indicators.
- High temperature actuator option available, consult factory
- CE Marked, SIL3 Rated

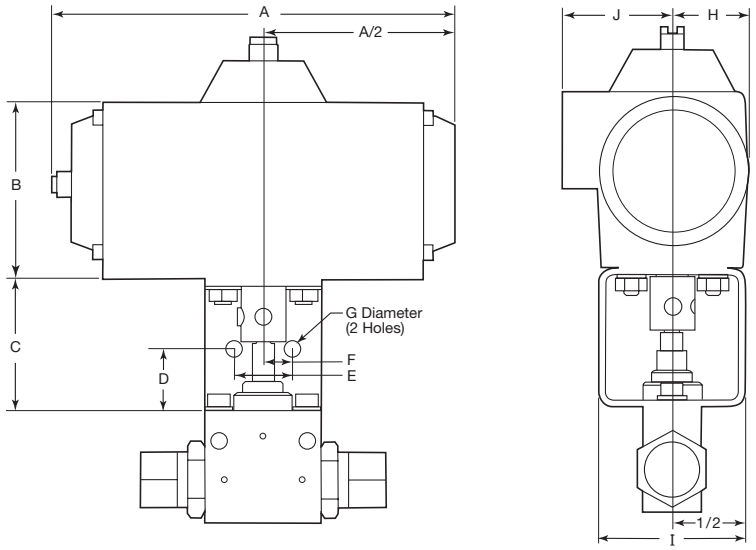

Actuators: Electric Operated Ball Valves (EO1, EO2, EO3)

Weather-proof, NEMA 4, 4X Watertight Enclosure

90° and 180° Actuation (No Spring Return)

Valve Series*	Dimension Data - Inches (mm)						Voltage	Time to Turn 90° Seconds
	A	B	C	D	E	F		
2B4-EO1	2.50 (63.50)	1.25 (31.75)	1.00 (25.40)	0.50 (12.70)	0.28 (7.11)	2.50 (63.50)	120 VAC	3
2B4-EO2							240 VAC	3
2B4-EO3							24 VDC	3
2B6-EO1	3.00 (76.20)	1.50 (38.10)	1.50 (38.10)	0.75 (19.05)	034 (8.64)	3.00 (76.20)	120 VAC	7
2B6-EO2							240 VAC	7
2B6-EO3							24 VDC	5
3B3-EO1	2.50 (63.50)	1.25 (31.75)	1.00 (25.40)	0.50 (12.70)	0.28 (7.11)	2.50 (63.50)	120 VAC	3
3B3-EO2							240 VAC	3
3B6-EO1	3.00 (76.20)	1.50 (38.10)	1.50 (38.10)	0.75 (19.05)	0.34 (8.64)	3.00 (76.20)	120 VAC	7
3B6-EO2							240 VAC	7
3BD3-EO1	2.50 (63.50)	1.25 (31.75	1.00 (25.40)	0.50 (12.70)	0.28 (7.11)	2.50 (63.50)	120 VAC	3
3BD3-EO2							240 VAC	3
3BD3-EO32							24 VDC	3
3BD6-EO1	3.00 (76.20)	1.50 (38.10)	1.50 (38.10)	0.75 (19.05)	034 (8.64)	3.00 (76.20)	120 VAC	7
3BD6-EO2							240 VAC	7
3BD6-EO3							24 VDC	5

* Add the suffix **-EO1**, **-EO2** or **-EO3** to the appropriate valve catalog number for a complete valve assembly
Actuators do not have repair kits and must be returned to factory for repair.

SPECIFICATIONS:

- 1/2" NPT female conduit connection
- Manual Override
- Powder coated aluminum housing
- CE & CSA approved
- Weight (all models): 5 lbs.
- 120 & 240 Volt are 50/60 Hz, for other voltages consult factory
- Actuator operating temperature: 0°F to 160°F (-17°C to 71°C)
- 15 amp SPDT Limit Switches (standard)
- For other options consult factory

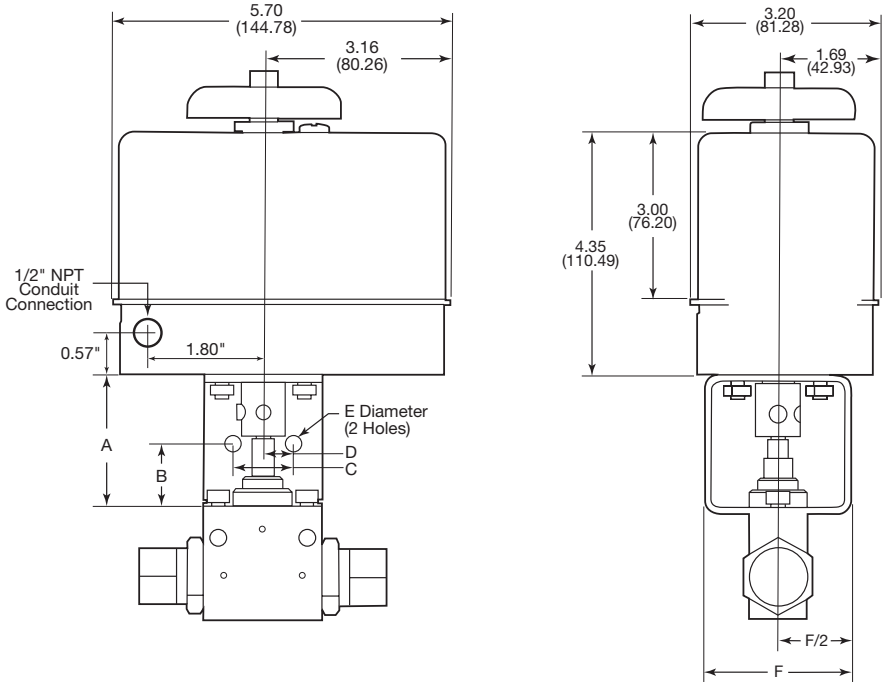

Tel: +45 63 12 83 00 | Email: ps@hymatik.com | www.hymatik.com | Hvidkaervej 27a, DK-5250 Odense SV, Denmark

Actuators: Electric Operated Ball Valves (E01, E02, E03)

Weather-proof, NEMA 4, 4X Watertight Enclosure

90° and 180° Actuation

Valve Series*	Dimension Data - Inches (mm)						Voltage	Time to Turn 90° Seconds
	A	B	C	D	E	F		
2B8-EO1	3.00 (76.20)	1.50 (38.10)	2.00 (50.80)	1.00 (25.40)	0.53 (13.46)	3.00 (76.20)	120 VAC	5
2B8-EO2							240 VAC	5
2B8-EO3							24 VDC	5
3B8-EO1	3.00 (76.20)	1.50 (38.10)	2.00 (50.80)	1.00 (25.40)	0.53 (13.46)	3.00 (76.20)	120 VAC	5
3B8-EO2							240 VAC	5
3BD8-EO1	3.00 (76.20)	1.50 (38.10)	2.00 (50.80)	1.00 (25.40)	0.53 (13.46)	3.00 (76.20)	120 VAC	5
3BD8-EO2							240 VAC	5
3BD8-EO3							24 VDC	5
4B6-EO1	3.00 (76.20)	1.50 (38.10)	1.50 (38.10)	0.75 (19.05)	0.34 (8.64)	3.00 (76.20)	120 VAC	5
4B6-EO2							240 VAC	5
4B6-EO3							24 VDC	5
4BS6-EO1	3.00 (76.20)	1.50 (38.10)	1.50 (38.10)	0.75 (19.05)	034 (8.64)	3.00 (76.20)	120 VAC	5
4BS6-EO2							240 VAC	5
4BS6-EO3							24 VDC	5

* Add the suffix **-EO1**, **-EO2** or **-EO3** to the appropriate valve catalog number for a complete valve assembly
Actuators do not have repair kits and must be returned to factory for repair.

SPECIFICATIONS:

- **EO1**: Electric 120 VAC
- **EO2**: Electric 240 VAC
- **EO3**: Electric 24 VDC
- Actuator operating temperature: 0°F to 160°F (-18°C to 71°C)
- Weight (all models): 9 lbs.
- For other options consult factory
- Powder coated aluminum housing
- CE & CSA approved for NEMA 4 & 4X
- Manual Override (wrench required)
- 1/2" NPT female conduit connection
- 15 amp SPDT Limit Switches (standard)

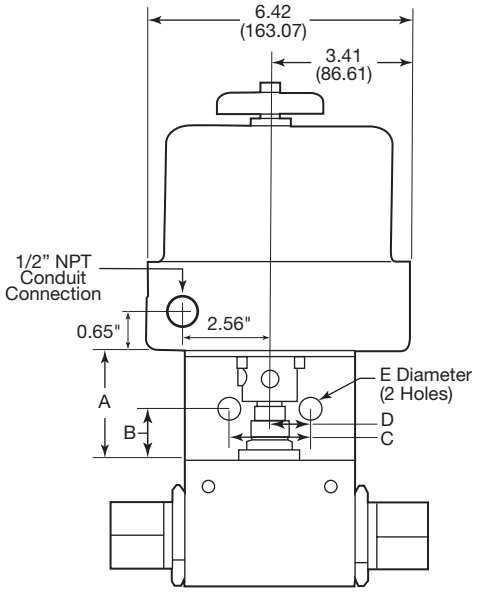

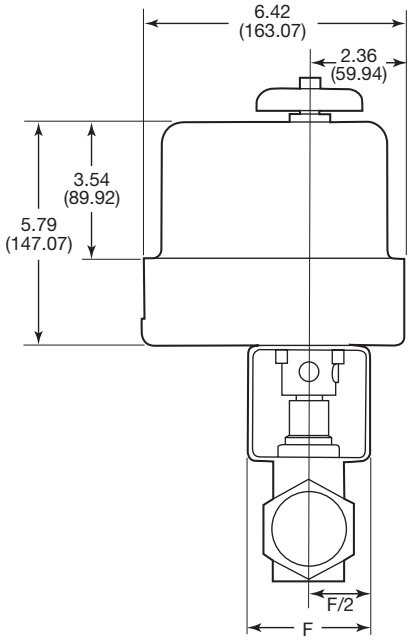

Tel: +45 63 12 83 00 | Email: ps@hymatik.com | www.hymatik.com | Hvidkaervej 27a, DK-5250 Odense SV, Denmark

Actuators: Electric Operated Ball Valves (EO1, EO2)

Weather-proof, NEMA 4, 4X Watertight Enclosure

90° Actuation only

Valve Series*	Dimension Data - Inches (mm)						Voltage	Time to Turn 90° Seconds	Weight lbs.	Figure
	A	B	C	D	E	F				
2B12-EO1	5.00 (127.00)	2.50 (63.50)	3.25 (82.55)	1.63 (41.400)	0.53 (13.46)	5.00 (127.00)	120 VAC	10	50.5	1
2B12-EO2							240 VAC	10		
2B16-EO1	6.00 (152.40)	3.00 (76.20)	3.25 (82.55)	1.63 (41.40)	0.53 (13.46)	6.00 (152.40	120 VAC	10	64.0	2
2B16-EO2							240 VAC	10		

* Add the suffix **-EO1**, **-EO2** or **-EO3** to the appropriate valve catalog number for a complete valve assembly
Actuators do not have repair kits and must be returned to factory for repair.

SPECIFICATIONS:

- **EO1**: Electric 120 VAC
- **EO2**: Electric 240 VAC
- Manual Override (wrench required)
- Weatherproof enclosure, IP67, Type 4, 4X,
- For other options consult factory
- 3/4" NPT female conduit connection
- CE & CSA approved for NEMA 4 and 4X
- Actuator operating temperature: -4°F to 158°F (20°C to 70°C)
- Powder coated aluminum housing

Figure 1

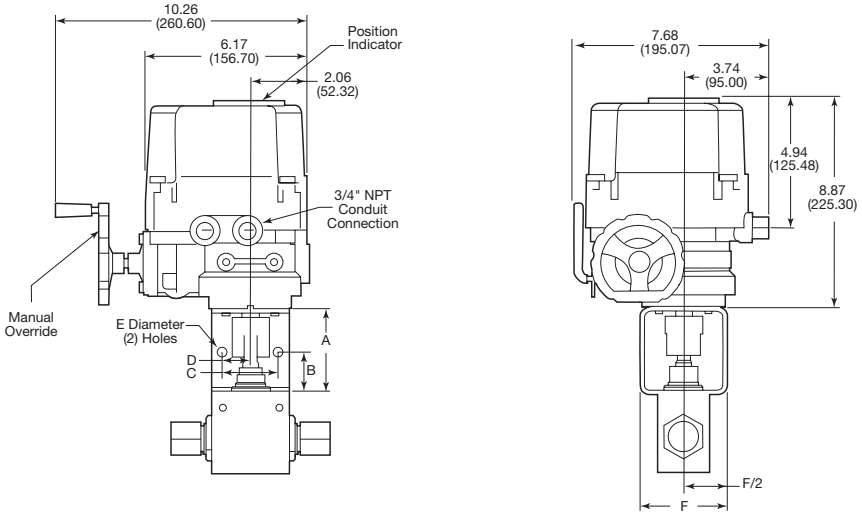

Figure 2

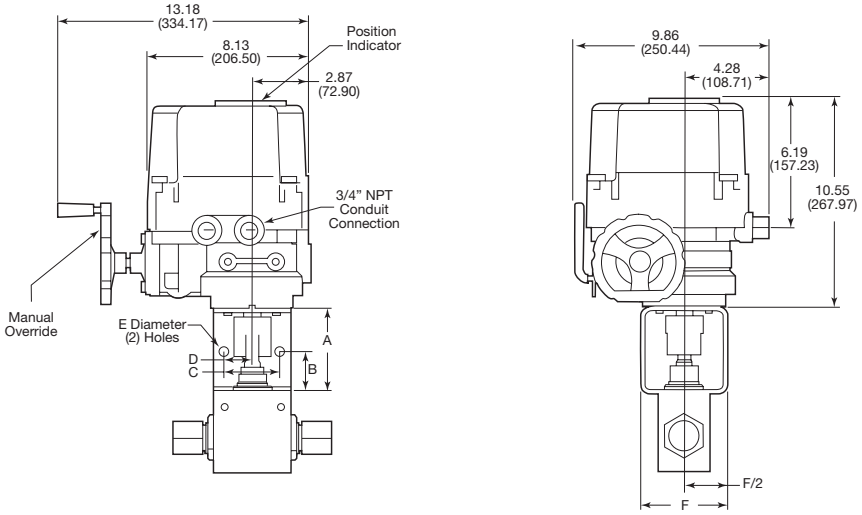

Tel: +45 63 12 83 00 | Email: ps@hymatik.com | www.hymatik.com | Hvidkaervej 27a, DK-5250 Odense SV, Denmark

Actuators: Electric Explosion Proof Operated Ball Valves (E01X, E02X, E03X)

Explosion-proof, NEMA 7 Enclosure, ATEX Ex d IIb T4, IP67

90° Actuation only

Valve Series*	Dimension Data - Inches (mm)						Voltage	Time to Turn 90° Seconds
	A	B	C	D	E	F		
2B4-EO1X	3.00 (76.20)	1.50 (38.10)	1.00 (25.40)	0.50 (12.70)	0.28 (7.11)	3.00 (76.20)	120 VAC	7
2B4-EO2X							240 VAC	
2B4-EO3X							24 VDC	
2B6-EO1X	3.00 (76.20)	1.50 (38.10)	1.50 (38.10)	0.75 (19.05)	0.34 (8.64)	3.00 (76.20)	120 VAC	7
2B6-EO2X							240 VAC	
2B6-EO3X							24 VDC	
3BD3-EO1X	3.00 (76.20)	1.50 (38.10)	1.00 (25.40)	0.50 (12.70)	0.28 (7.11)	3.00 (76.20)	120 VAC	7
3BD3-EO2X							240 VAC	
3BD3-EO3X							24 VDC	
3BD6-EO1X	3.00 (76.20)	1.50 (38.10)	1.50 (38.10)	0.75 (19.05)	0.34 (8.64)	3.00 (76.20)	120 VAC	7
3BD6-EO2X							240 VAC	
3BD6-EO3X							24 VDC	

* Add the suffix **-EO1X**, **-EO2X** or **-EO3X** to the appropriate valve catalog number for a complete valve assembly
Actuators do not have repair kits and must be returned to factory for repair.

SPECIFICATIONS:

- 3/4" NPT female conduit connection
- Manual Override
- Powder coated aluminum housing
- CE & CSA approved
- ATEX Explosion-Proof enclosure II 2 G, E Ex d IIB T4, IP67
- Limit switches (SPDT) as standard
- 120 & 240 Volt are 50/60 Hz, for other voltages consult factory
- Actuator operating temperature: -4°F to 158°F (-20°C to 70°C)
- Weight (all models): 16.4 lbs.
- Designed to comply with NEMA 7 Explosion Proof
- Watertight enclosure (IP68 10M 72HR)
- For other options consult factory

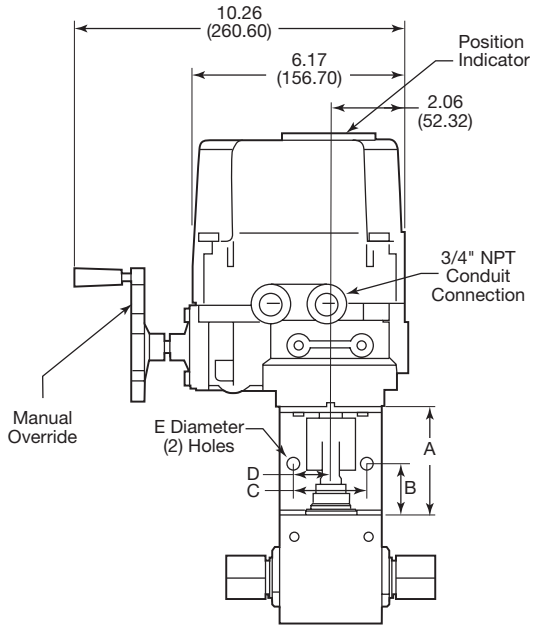

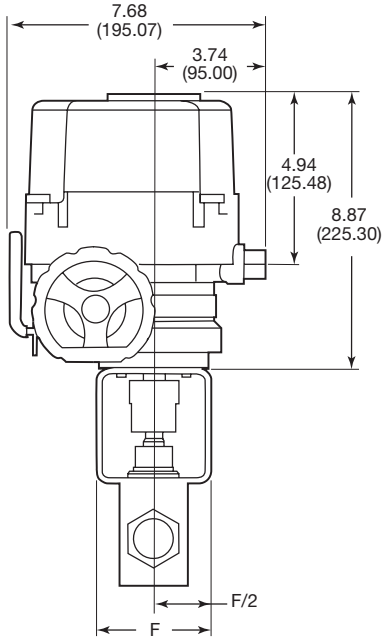

Tel: +45 63 12 83 00 | Email: ps@hymatik.com | www.hymatik.com | Hvidkaervej 27a, DK-5250 Odense SV, Denmark

Actuators: Electric Explosion Proof Operated Ball Valves (E01X, E02X, E03X)

Explosion-proof, NEMA 7 Enclosure, ATEX Ex d IIb T4, IP67

90° Actuation only

Valve Series*	Dimension Data - Inches (mm)						Voltage	Time to Turn 90° Seconds
	A	B	C	D	E	F		
2B8-EO1X	3.00 (76.20)	1.50 (38.10)	2.00 (50.80)	1.00 (25.40)	0.56 (14.22)	3.00 (76.20)	120 VAC	7
2B8-EO2X							240 VAC	
2B8-EO3X							24 VDC	
3BD8-EO1X	3.00 (76.20)	1.50 (38.10)	2.00 (50.80)	1.00 (25.40)	0.56 (14.22)	3.00 (76.20)	120 VAC	7
3BD8-EO2X							240 VAC	
3BD8-EO3X							24 VDC	
4B6-EO1X	3.00 (76.20)	1.50 (38.10)	2.00 (50.80)	1.00 (25.40)	0.56 (14.22)	3.00 (76.20)	120 VAC	7
4B6-EO2X							240 VAC	
4B6-EO3X							24 VDC	

* Add the suffix **-EO1X**, **-EO2X** or **-EO3X** to the appropriate valve catalog number for a complete valve assembly
Actuators do not have repair kits and must be returned to factory for repair.

SPECIFICATIONS:

- 3/4" NPT female conduit connection
- Manual Override
- Powder coated aluminum housing
- CE & CSA approved
- ATEX Explosion-Proof enclosure II 2 G, E Ex d IIB T4, IP67
- Limit switches (SPDT) as standard
- 120 & 240 Volt are 50/60 Hz, for other voltages consult factory
- Actuator operating temperature: -4°F to 158°F (-20°C to 70°C)
- Weight (all models): 36.7 lbs.
- Designed to comply with NEMA 7 Explosion Proof
- Watertight enclosure (IP68 10M 72HR)
- For other options consult factory

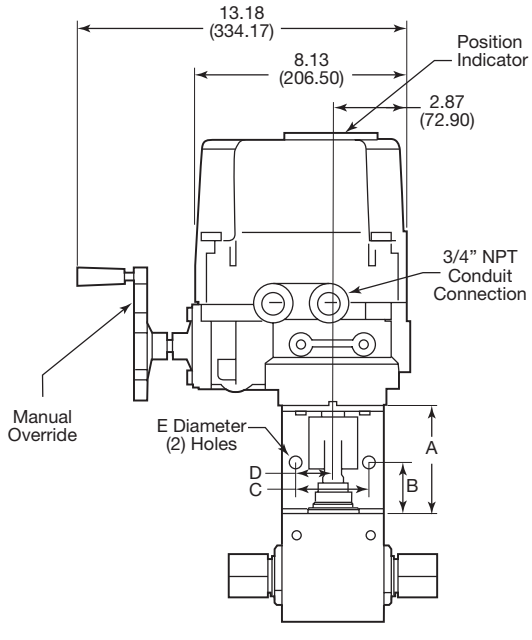

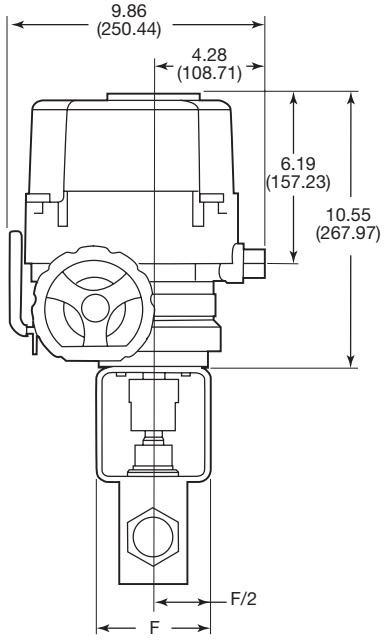

Tel: +45 63 12 83 00 | Email: ps@hymatik.com | www.hymatik.com | Hvidkaervej 27a, DK-5250 Odense SV, Denmark

Actuators: Electric Explosion Proof Operated Ball Valves (E01X, E02X)

Explosion-proof, NEMA 7 Enclosure, ATEX Ex d IIb T4, IP67

90° Actuation only

Valve Series*	Dimension Data - Inches (mm)						Voltage	Time to Turn 90° Seconds	Weight lbs.	Figure
	A	B	C	D	E	F				
2B12-EO1X	5.00 (127.00)	2.50 (63.50)	3.25 (82.55)	1.63 (41.400)	0.53 (13.46)	5.00 (127.00)	120 VAC	8.5	50.8	1
2B12-EO2X							240 VAC			
2B16-EO1X	6.00 (152.40)	3.00 (76.20)	3.25 (82.55)	1.63 (41.40)	0.53 (13.46)	6.00 (152.40	120 VAC	10.5	64.0	2
2B16-EO2X							240 VAC			

* Add the suffix **-EO1X**, or **-EO2X** to the appropriate valve catalog number for a complete valve assembly
Actuators do not have repair kits and must be returned to factory for repair.

SPECIFICATIONS:

- **EO1**: Electric 120 VAC
- **EO2**: Electric 240 VAC
- Manual Override
- Designed to comply with NEMA 7 Explosion Proof
- Watertight enclosure (IP68 10M 72HR)
- Limit switches (SPDT) as standard
- 3/4" NPT female conduit connection
- CE & CSA approved for NEMA 4 and 4X
- Actuator operating temperature: -4°F to 158°F (20°C to 70°C)
- Powder coated aluminum housing
- ATEX Explosion-Proof enclosure II 2 G, E Ex d IIB, T4, IP67
- For other options consult factory

Figure 1

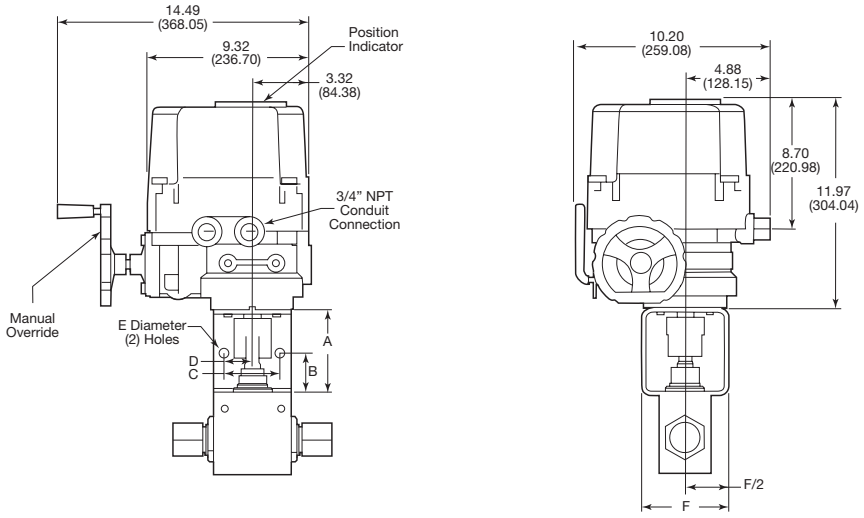

Figure 2

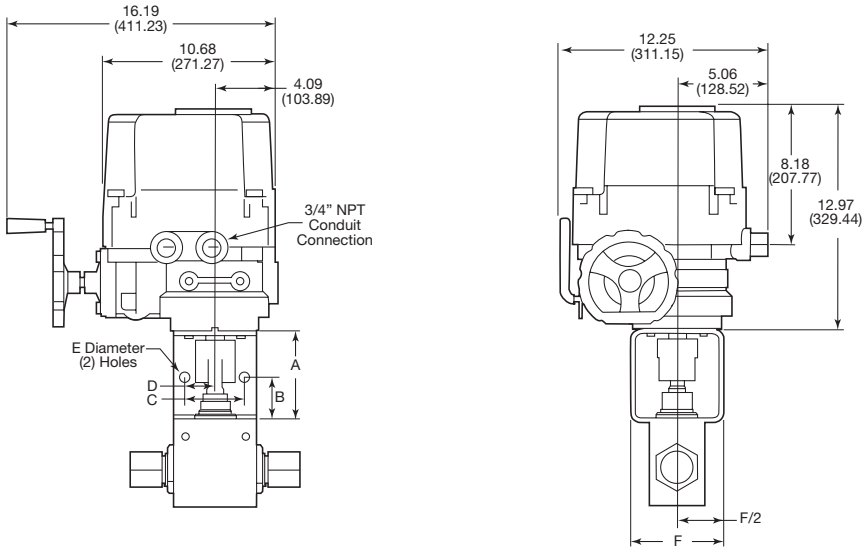

Tel: +45 63 12 83 00 | Email: ps@hymatik.com | www.hymatik.com | Hvidkaervej 27a, DK-5250 Odense SV, Denmark

Lock-out Options: Ball Valves (2B4, 2B6, 2B8, 2B12, 2B16, 3BD3, 3DB6, 3DB8)

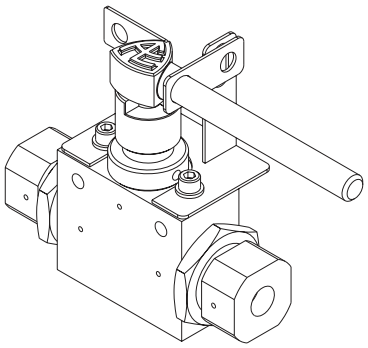

Versions: 2B4, 2B6, 3BD3, 3BD6

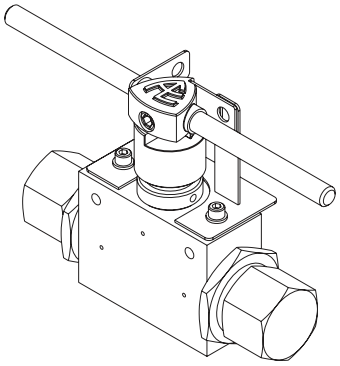

Versions: 2B8, 2B12, 2B16, 3BD8

-L Suffix option

Using the "**-L**" suffix option delivers the bolt-on Stainless Steel locking bracket shown above for the following Ball Valve Sizes:

All 2-Way Ball Valves
All 3BD (90° rotation) Series Ball Valves

We do not offer a metal lockout bracket for the 3-way 180° handle rotation ball valves (3B3, 3B6, 3B8). Nor do we offer any metal lockout bracket for the 4-way ball valve. To upgrade valves already in operation, order mounting kits using these part numbers: (includes bolting hardware, and modified handle, but does not include lock)

2B4-L For all 2B4 valves
2B6-L For all 2B6 valves
2B8-L For all 2B8 valves
2B12-L For all 2B12 valves
2B16-L For all 2B16 valves
3BD3-L For all 3BD3 valves
3BD6-L For all 3BD6 valves
3BD8-L For all 3BD8 valves

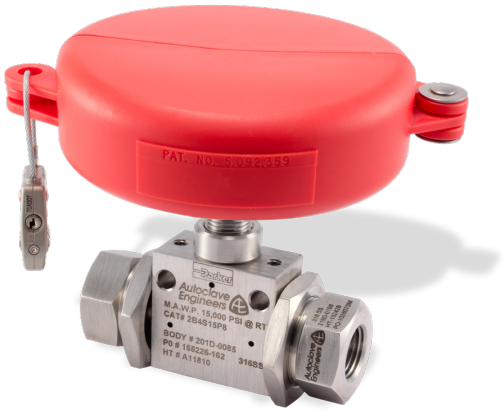

Ball Valve Clam Shell Handle Lock-Out:

(ordered separately, lock not included)

Clam Shell Design covers ball valve handle to prevent unauthorized access during any Lock-Out, Tag-Out maintenance or emergency situation. This clamshell design is available in four (4) sizes dependent on handle length:

P/N AE004855 - 1" to 2.5" handle length
P/N 90088 – 2.5" to 5.0" handle length
P/N 90194 – 6.5" to 10" handle length
P/N AE004350 - 8" to 13" handle length

This product is optional for all ball valve sizes but necessary for all 3-way (3B series) Ball Valves that have a 180° handle turn and both 4-way (4B and 4BS Series) Ball Valves. We do not offer a metal bracket lock-out option for these valves at this time.

Tel: +45 63 12 83 00 | Email: ps@hymatik.com | www.hymatik.com | Hvidkaervej 27a, DK-5250 Odense SV, Denmark

Ball Valve

Double Block & Bleed, 1/4 Turn

3/8" & 5/8" Bore to 15,000 psi (1034 bar)

6DB and 10DB Series



Parker Autoclave Engineers Double Block & Bleed valve is a two-stem ball valve with needle style vent valve providing economical and reliable isolation in critical areas superior in comparison to a standard, single valve. This valve is designed for use where critical isolation is needed to ensure that leakage does not occur. Our 3/8" and 5/8" Double Block & Bleed valves are designed to save space and weight while capable of pressures to 15,000 psi (1034 bar). These ball valves can also be modified to incorporate the use of special materials, optional seals with and capability for high temperature applications to 500°F (260°C).

Double Block & Bleed Ball Valve Features:

- One-piece, trunnion mounted style, stem design eliminates shear failure and reduces the effects of side loading found in two piece designs
- Re-torqueable seat glands for longer seat life
- Carbon filled PEEK seats offer excellent resistance to chemicals, heat, and wear/abrasion
- Vee-Stem Needle Vent Valve with PTFE Packing
- Full-port flow path minimizes pressure drop
- Manufactured using UNS S31600 316 cold worked Stainless Steel
- Low friction pressure assisted graphite filled PTFE stem seal increases cycle life and reduces operating torque
- FKM o-rings for operation from 0° to 400°F (-18 to 204°C)

Traceability is ensured by use of heat and purchase order codes etched on valve body that also includes model number, MAWP rating, and material type references. Parker Autoclave Engineers' valves are complemented by a complete line of Medium Pressure Cone & Thread, Quick Set (QSS), or NPT fittings, check valves, relief valves, and line filters.

ENGINEERING YOUR SUCCESS.

6DB Series: .323" (8.20mm) Orifice - Pressures to 15,000 psi (1034 bar)



Connection Type	MAWP** at Room temperature	Minimum Orifice Inches (mm)	Rated C_V
SW500 (1/2" LP)	10,000 psi (690 bar)	0.323 (8.20)	2.3
SF375CX20 (3/8" MP)	15,000 psi (1034 bar)	0.203 (5.16)	1.0
SF562CX20 (9/16" MP)	15,000 psi (1034 bar)	0.312 (7.92)	2.1
SF750CX20 (3/4" MP)	15,000 psi (1034 bar)	0.323 (8.20)	2.3
1/4 FNPT	15,000 psi (1034 bar)	0.323 (8.20)	2.3
3/8 FNPT	15,000 psi (1034 bar)	0.323 (8.20)	2.3
1/2 FNPT	15,000 psi (1034 bar)	0.323 (8.20)	2.3
QS562 (9/16" QSS)	15,000 psi (1034 bar)	0.323 (8.20)	2.3
QS750 (3/4" QSS)	15,000 psi (1034 bar)	0.323 (8.20)	2.3

** Special materials often have reduced MAWP ratings, see Technical brochure for assistance

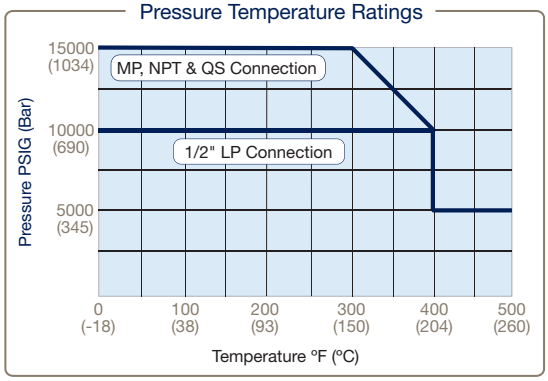

6DB Series Ball Valve Series

Pressure Ratings are determined by the end connections chosen, see chart.
Maximum Temperature rating is determined by the o-ring material.
NPT connections are limited to 400°F max due to PTFE Sealant.

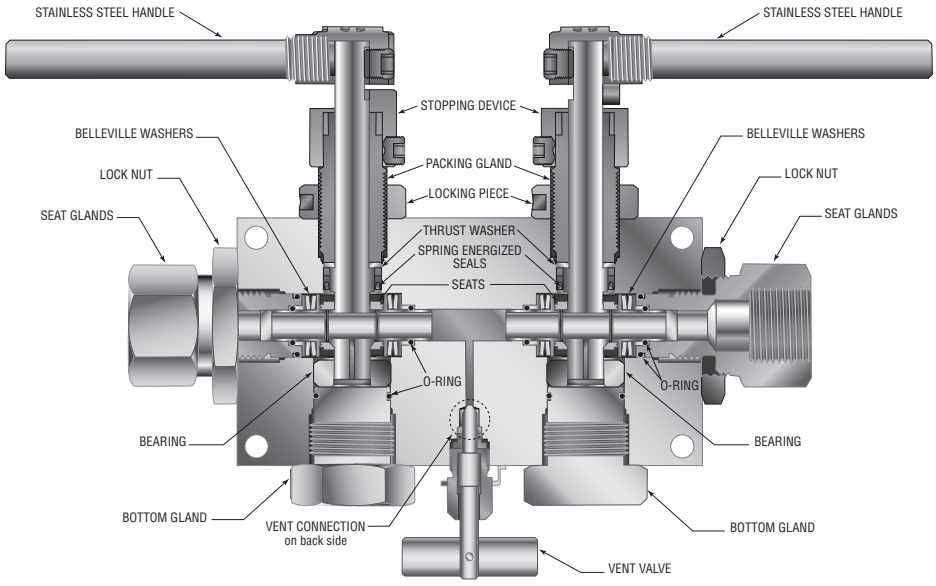

See ball valve actuator section for full description, additional information, and options.additional information, and options.

Tel: +45 63 12 83 00 | Email: ps@hymatik.com | www.hymatik.com | Hvidkaervej 27a, DK-5250 Odense SV, Denmark

Ordering Guide:

For complete information on available end connections and material options, see below. 6DB ball valves are furnished complete with tube or pipe connections. Standard valve has FKM o-rings [400ºF (204ºC) maximum].

Building a Part Number: *Example: 6DB15M9M4*

Example Part Number:	6DB	15	M9	M4	–	XXX
Ordering Parameters/Options:	Valve Series	Pressure (x 1000 psi)	Tube Connection	Vent Connection		Options
Table Reference: (see below)	A	B	C	D		E

A - Valve Series	
6DB	3/8" Double Block and Bleed Ball Valve

B - Pressure (x 1000 psi)	
10	10,000 psi
15	15,000 psi

C - Tube Connection

	Connection	MAWP @ RT	Seat Gland Hex
L8	SW500 (1/2" LP)	10,000 psi	1.38"
M6	SF375CX20 (3/8" MP)	15,000 psi	1.38"
M9	SF562CX20 (9/16" MP)	15,000 psi	1.38"
M12	SF750CX20 (3/4" MP)	15,000 psi	1.38"
P4	1/4" NPT	15,000 psi	1.38"
P6	3/8" NPT	15,000 psi	1.38"
P8	1/2" NPT	15,000 psi	1.38"
Q9	QS562 (9/16" QSS)	15,000 psi	1.38"
Q12	QS750 (3/4" QSS)	15,000 psi	1.50"

D - Vent Connection	
M4	1/4" MP - SF250CX20 connection
P4	1/4" NPT
Q4	1/4" QS250 Connection

E - Options (suffix addition)	
HT	O-ring, Perfluoroelastomer, - FFKM 30° to 500ºF (260ºC)
EPR	O-ring, EthylenePropylene Rubber, 0° to 250°F (121°C)
SOG*	NACE Material, Hardness Verification/Certificate
2507**	UNS 32750 2507 Super Duplex Stainless Steel
IN625**	UNS N06625 Inconel 625 Materials
K	Antivibration Gland Fitting (Cone and Thread Connections only)
L	Lock-out Bracket, Stainless Steel

Notes:
316 SS Valve bodies are cold worked and not suitable for use in NACE/ISO 15156 applications. If required, contact factory for options.

* SOG suffix also changes CW 316 SS body material to Annealed 316 SS suitable for NACE service. Contact factory for pressure reduction.

** Special materials often have reduced MAWP ratings, see Technical brochure for assistance.

Basic Repair Kits:

6DB Double Block & Bleed Valves are not repairable in field and must be returned to authorized repair center or factory location.

Tel: +45 63 12 83 00 | Email: ps@hymatik.com | www.hymatik.com | Hvidkaervej 27a, DK-5250 Odense SV, Denmark

6DB Series 3/8" Bore Ball Valve Dimensions:

6DB Series 3/8" Bore Double Block & Bleed Ball Valve

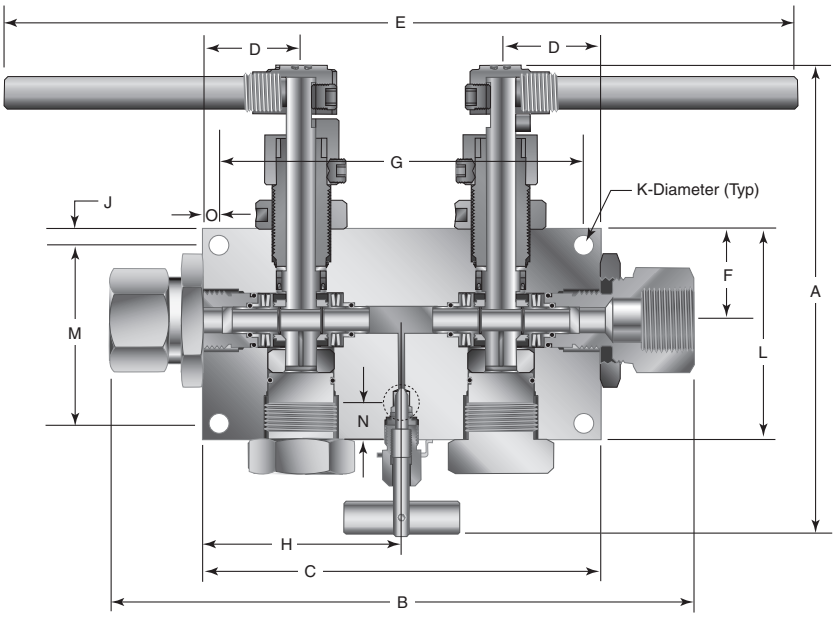

	VALVE MODELS - inches (mm)
	6DB
A	7.14 (181.4)
B	8.81 (223.8)
C	6.00 (152.4)
D	1.50 (38.1)
E	12.94 (328.7)
F	1.38 (34.9)
G	5.00 (127.0)
H	3.00 (76.2)
J	0.41 (10.3)
K	0.28 (7.1)
L	3.19 (81.0)
M	2.38 (60.4)
N*	0.65 (16.5)
O	0.50 (12.7)
Block Thickness	1.75 (44.5)

* Centerline location of vent outlet port

Panel Mounting Dimensions:

6DB Series (Double Block and Bleed) Panel Mounting

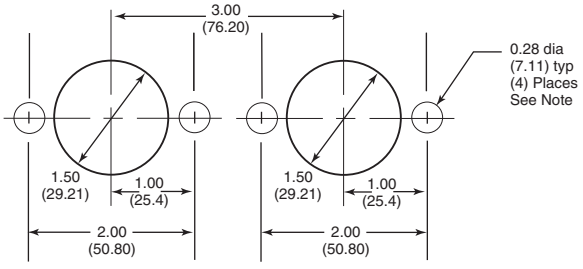

All dimensions are for reference only
and are subject to change without notice.

Note: Body Mounting 1/4" - 20 threads

Material of Construction:

Item #	Description	Material
1	Handle	304 SS
2	Stem Seal/w 304 SS Spring	Graphite/Carbon PTFE
3	Seat Retainer	Nitronic 50 HC
4	Belleville Washer	17-7 PH
5	Locknut	316 SS
6	Seat Gland	316 CW SS
7	Bottom Bearing	Virgin PEEK
8	Bottom Gland	316 CW SS
9	Ball Stem (2)	316 CW SS
10	Stopping Device	316 CW SS
11	Packing Gland	316 CW SS
12	Seat	Arlon 1260
13	Locking Piece	316 SS
14	Thrust Washer	Ampco 45
15	Stress Riser Backup	Nitronic 50 HC
16	O-ring	90 Duro FKM
17	O-ring	90 Duro FKM
18	Bottom Washer	316 SS
19	Packing Washer	Ampco 45
20	Body	316 SS
21	Packing Gland	316 SS
22	Vent Valve Stem	316 SS

Please reference drawing on Page 5

Tel: +45 63 12 83 00 | Email: ps@hymatik.com | www.hymatik.com | Hvidkaervej 27a, DK-5250 Odense SV, Denmark

6DB Series 3/8" Bore Ball Valve Material:

6DB Series 3/8" Bore Double Block & Bleed Ball Valve Part Identification

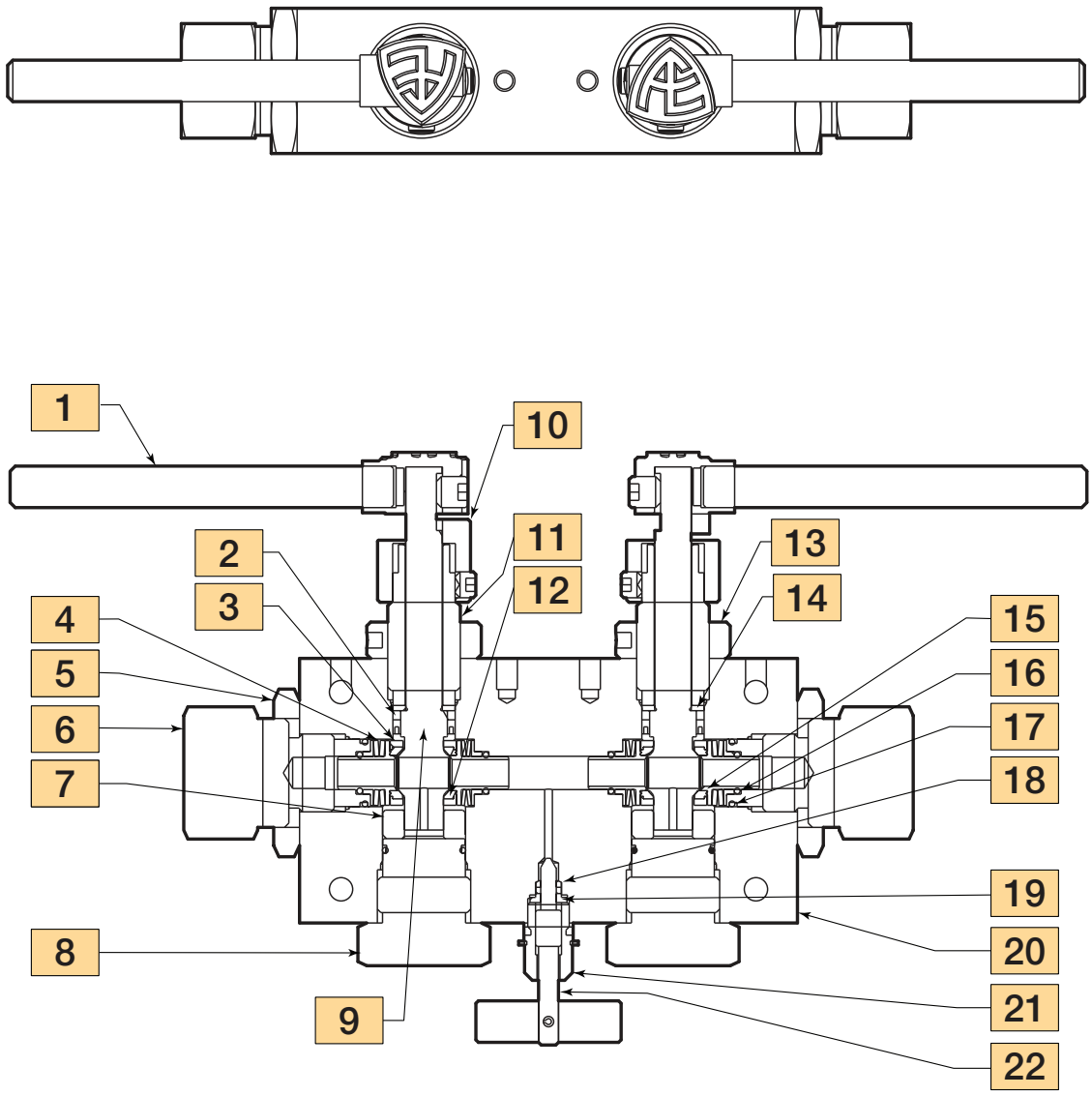

Many valve parts are duplicated but are only identified once for clarity.

10DB Series: .623" (15.82mm) Orifice - Pressures to 15,000 psi (1034 bar)



Series M10DB Vent Valve Option Shown

Connection Type	MAWP** at Room temperature	Minimum Orifice Inches (mm)	Rated C_V*
SF750CX10 (3/4" MP)	15,000 psi (1034 bar)	0.516 (13.11)	11.5
SF1000CX10 (1" MP)	15,000 psi (1034 bar)	0.623 (15.82)	28.1
SF1500CX (1.5" MP)	15,000 psi (1034 bar)	0.623 (15.82)	28.1
3/4" FNPT	10,000 psi (690 bar)	0.623 (15.82)	28.1
1" FNPT	10,000 psi (690 bar)	0.623 (15.82)	28.1
QS750 (3/4" QSS)	15,000 psi (1034 bar)	0.623 (15.82)	11.5
QS1000 (1" QSS)	15,000 psi (1034 bar)	0.623 (15.82)	16.5

** Special materials often have reduced MAWP ratings, see Technical brochure for assistance

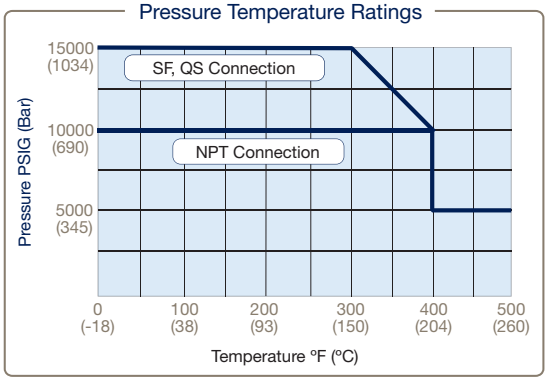

10DB Series Ball Valve Series

Pressure Ratings are determined by the end connections chosen, see chart.
Maximum Temperature rating is determined by the o-ring material.
NPT connections are limited to 400°F max due to PTFE Sealant.

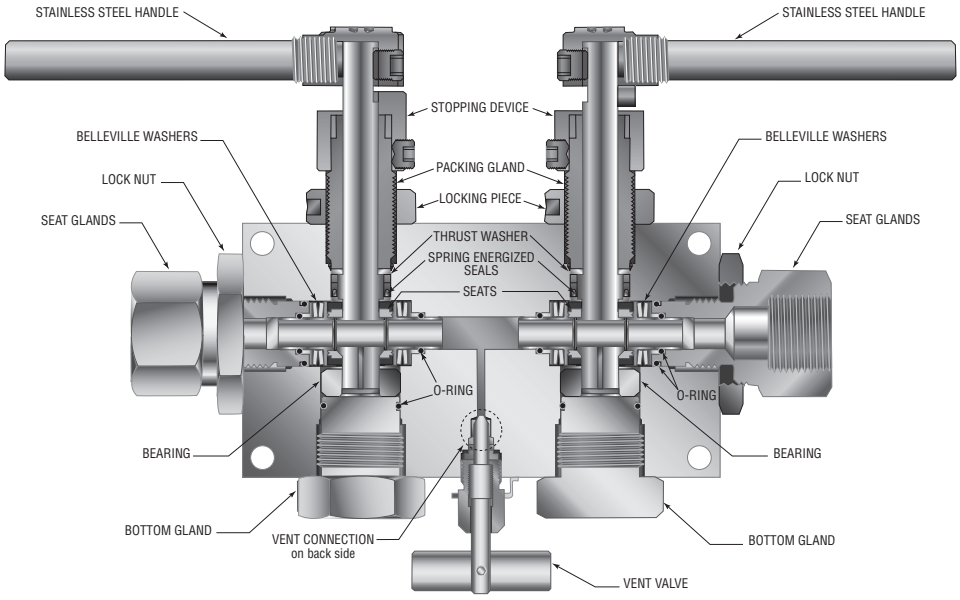

See ball valve actuator section for full description, additional information, and options.additional information, and options.

Tel: +45 63 12 83 00 | Email: ps@hymatik.com | www.hymatik.com | Hvidkaervej 27a, DK-5250 Odense SV, Denmark

Ordering Guide:

For complete information on available end connections and material options, see below. 10DB Series ball valves are furnished complete with tube or pipe connections. Standard valve has FKM o-rings [400°F (204°C) maximum].

Building a Part Number: *Example: 10DB15M12M4*

Example Part Number:	10DB	15	M12	M4	–	XXX
Ordering Parameters/Options:	Valve Series	Pressure (x 1000 psi)	Tube Connection	Vent Connection		Options
Table Reference: (see below)	A	B	C	D		E

A - Valve Series	
10DB	5/8 Double Block and Bleed Ball Valve

B - Pressure (x 1000 psi)	
10	10,000 psi
15	15,000 psi

C - Tube Connection

	Connection	MAWP @ RT	Seat Gland Hex
M12	SF750CX10 (3/4 MP)	15,000 psi	1.87"
M16	SF1000CX10 (1" MP)	15,000 psi	1.87"
M24	SF1500CX10 (1.5 MP)	15,000 psi	2.25"
P12	3/4" FNPT	10,000 psi	1.87"
P16	1" FNPT	10,000 psi	1.87"
Q12	QS750 (3/4" QSS)	15,000 psi	1.87"
Q16	QS1000 (1" QSS)	15,000 psi	2.00"

D - Vent Connection	
M4	1/4" MP - SF250CX20 connection
P4	1/4" NPT
Q4	1/4" QS250 Connection

E - Options (suffix addition)	
HT	O-ring, Perfluoroelastomer - FFKM 30° to 500°F (260°C)
EPR	O-ring, Ethylene Propylene Rubber, 0° to 250°F (121°C)
SOG*	NACE Material, Hardness Verification/Certificate
2507**	UNS 32750 2507 Super Duplex Stainless Steel
IN625**	UNS N06625 Inconel 625 Materials
K	Antivibration Gland Fitting (Cone and Thread Connections only)
L	Lock-out Bracket, Stainless Steel

Notes:
316 SS Valve bodies are cold worked and not suitable for use in NACE/ISO 15156 applications. If required, contact factory for options.

* SOG suffix also changes CW 316 SS body material to Annealed 316 SS suitable for NACE service. Contact factory for pressure reduction.

** Special materials often have reduced MAWP ratings, see Technical brochure for assistance.

Basic Repair Kits:

10DB Double Block & Bleed Valves are not repairable in field and must be returned to authorized repair center or factory location.

Tel: +45 63 12 83 00 | Email: ps@hymatik.com | www.hymatik.com | Hvidkaervej 27a, DK-5250 Odense SV, Denmark

10DB Series 5/8" Bore Ball Valve Dimensions:

10DB 5/8" Bore Double Block & Bleed Ball Valve

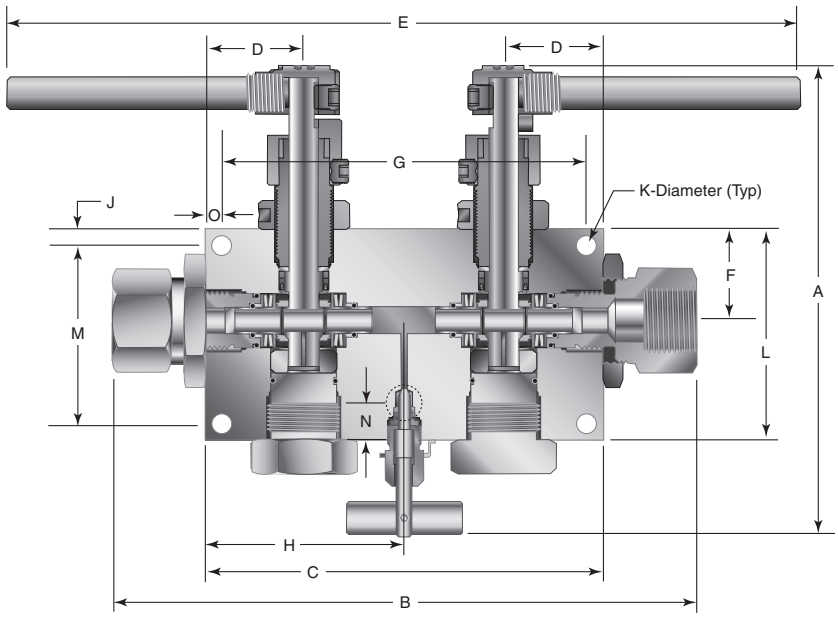

	VALVE MODELS - inches (mm)
	10DB
A	13.02 (330.8)
B	15.40 (391.2)
C	10.50 (266.7)
D	2.66 (67.6)
E	27.45 (697.2)
F	2.53 (64.3)
G	8.69 (220.8)
H	5.25 (133.4)
J	0.72 (18.3)
K	0.41 (10.3)
L	5.25 (133.4)
M	3.81 (96.8)
N*	1.75 (44.5)
O	0.91 (23.1)
Block Thickness	3.00 (76.2)

* Centerline location of vent outlet port

Panel Mounting Dimensions:

10DB Series (Double Block and Bleed) Panel Mounting

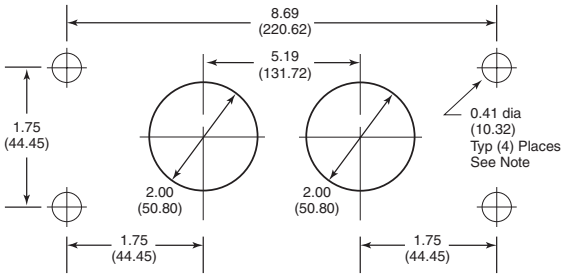

All dimensions are for reference only and are subject to change without notice.

Note: Body Mounting 3/8" - 16 threads

Material of Construction:

Item #	Description	Material
1	Handle	316 SS
2	Thrust Washer	AMPCO 45
3	Gland Seal	Carbon Filled PTFE
4	Seat Retainer	Nitronic 50 HC
5	Seat	Carbon Filled Peek
6	Locking Device	316 SS
7	Seat Gland	316 SS
8	Belleville Washer Backup	316 CW SS
9	Bottom Bearing	AMPCO 45
10	O-ring	90 Duro FKM
11	Packing Washer	AMPCO 45
12	Vent Valve Stem	316 SS
13	Packing Gland	316 SS
14	Stopping Device	316 SS
15	Packing Gland	316 SS
16	Locking Piece	316 SS
17	Bearing Guide	Virgin PEEK
18	Ball Stem	316 SS
19	O-ring	90 Duro FKM
20	Stres Riser Backup	Carbon Filled Peek
21	Body	316 SS
22	Bottom Gland	316 SS
23	Bottom Washer	316 SS
24	Packing	PTFE
25	Handle	316 SS

Please reference drawing on Page 9

Tel: +45 63 12 83 00 | Email: ps@hymatik.com | www.hymatik.com | Hvidkaervej 27a, DK-5250 Odense SV, Denmark

10DB Series 5/8" Bore Ball Valve Material:

5/8" Double Block and Bleed Ball Valve Part Identification

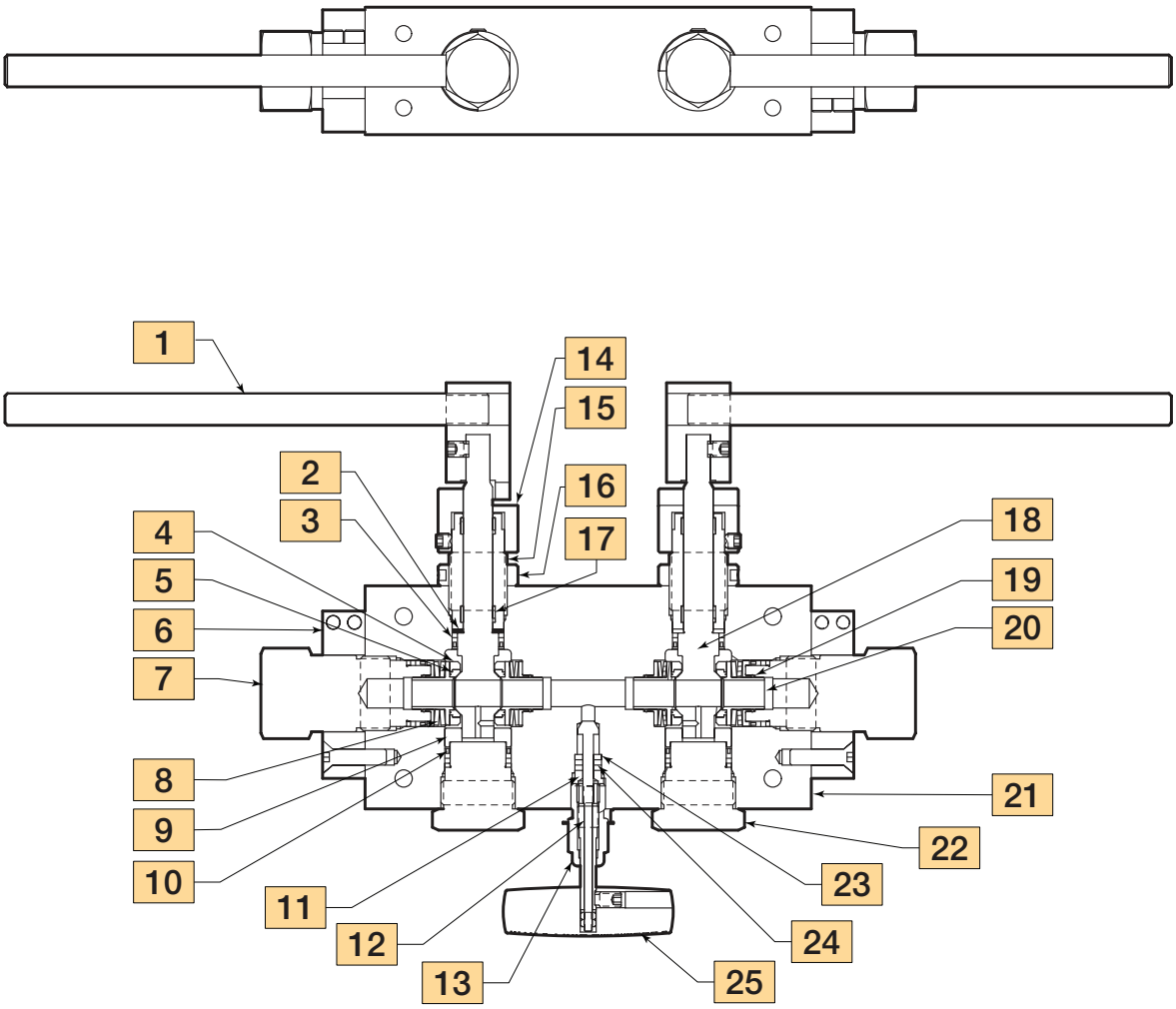

Many valve parts are duplicated but are only identified once for clarity.

Ball Valve

Subsea Series, 2 Way & 3 Way

Internal Pressures to 20,000 psi (1379 bar)
Water Depth to 12,500 ft. (3810m)



Principle of Operation:

Parker Autoclave Engineers subsea ball valves have been designed in accordance with ASME B31.3 Chapter IX High Pressure piping standards to fulfill the ever growing subsea applications in the petroleum industry as well as the need for externally pressurized components in other markets. Utilizing the same design technology as the standard ball valve, the subsea design incorporates the necessary design alterations to provide a reliable externally pressurized valve for the subsea industry.

Parker Autoclave Engineers has the most connection options available and all the associated tubing, fittings and adapters you would need to outfit any application you might have, above or below the surface. Traceability is ensured by use of heat and purchase order codes etched on valve body that also includes model number, pressure rating, and material type references.

Subsea Ball Valve Features:

- One-piece, trunnion mounted style, stem design eliminates shear failure and reduces the effects of side loading found in two piece designs
- Re-torqueable seat glands for longer seat life
- PEEK seats offer excellent resistance to chemicals, heat, and wear/abrasion
- Full-port flow path minimizes pressure drop
- UNS S31600/S31603 CW 316 Stainless Steel Material as standard. Optional materials available
- Low friction, pressure assisted, graphite filled PTFE stem seal increases cycle life and reduces operating torque
- Buna-N o-ring (Nitrile) standard, -20° to 250°F (-29° to 121°C)
- Additional seals engineered to prevent water and silt ingress to any threaded or rotating parts
- Designed to accept multiple types of tube and pipe end connections

Subsea Ball Valve Applications:

- Subsea Hydraulic Manifolds
- Subsea Control Umbilicals
- Subsea Wellheads and Control Packages

ENGINEERING YOUR SUCCESS.

Tel: +45 63 12 83 00 | Email: ps@hymatik.com | www.hymatik.com | Hvidkaervej 27a, DK-5250 Odense SV, Denmark

Principle of Subsea Operation and Design:



The Parker Autoclave Engineers ball valves can be utilized to switch or isolate flow. The standard material of construction of the valve is 316 cold worked 316/316L with PEEK seats, graphite filled PTFE stem seal, and o-ring material as required by the process fluid.

The subsea ball valve design incorporates additional o-ring seals, which prevent the ingress of seawater into the valve which would adversely affect the operation of the valve as well as contaminate the process fluid. A significant feature of the subsea design is a thrust washer positioned under the stem preventing outside sea water from moving the stem from its aligned position.

Subsea ball valves are designed to facilitate operation by a Remote Operated vehicle (ROV). No handle or valve stop is provided as standard in preparation for mating to an ROV acceptable actuator. ROV operator assemblies are used for valve mounting and to provide positive valve stop for precise 90° operation.



Adaptable for Remote Operated Vehicle (ROV) operation by customer.

Note:
Third party actuator shown above is not available from Parker Autoclave Engineers

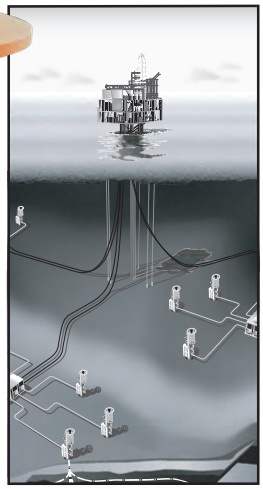

Various tube and pipe connections with valve bore sizes from 3/16" to 1" are available within a variety of valve configurations capable of up to 12,500' water depth (5,500 psi external pressure).

Contact Parker Autoclave Engineers technical sales support or your local distributor for more information on optional materials of construction, seal materials and valve configurations to fit your application requirements.

Subsea Actuation Torque

2 Way Subsea Ball Valve	Breakout Torque	Running Torque
1/4" Orifice Stem @ 20,000 psi	75 in-lbf (9 Nm)	70 in-lbf (9 Nm)
3/8" Orifice Stem @ 20,000 psi	275 in-lbf (31 Nm)	150 in-lbf (17 Nm)
1/2" Orifice Stem @ 15,000 psi	690 in-lbf (78 Nm)	425 in-lbf (48 Nm)
3/4" Orifice Stem @ 15,000 psi	140 ft-lb (190 Nm)	90 ft-lb (122 Nm)
1" Orifice Stem @ 10,000 psi	200 ft-lb (271 Nm)	150 ft-lb (203 Nm)

3 Way Subsea Ball Valve	Breakout Torque	Running Torque
3/16" Orifice Stem @ 20,000 psi	75 in-lbf (9 Nm)	70 in-lbf (9 Nm)
3/8" Orifice Stem @ 10,000 psi	275 in-lbf (31 Nm)	150 in-lbf (17 Nm)
1/2" Orifice Stem @ 10,000 psi	450 in-lbf (51 Nm)	420 in-lbf (47 Nm)

Breakout Torque is torque needed to initially rotate valve when in closed position with full MAWP on one side and 0 psi on the other.

Running Torque is torque needed to rotate the valve at full MAWP

Tel: +45 63 12 83 00 | Email: ps@hymatik.com | www.hymatik.com | Hvidkaervej 27a, DK-5250 Odense SV, Denmark

2 Way Subsea Series: 1/4" (6.35mm) Orifice

Pressures to 20,000 psi (1379 bar)

Connection Type	MAWP at Room Tmperature	Minimum Orifice Inches (mm)	Rated Cv
SF250CX20 (1/4" MP)	20,000 psi (1379 bar)	0.109 (2.77)	0.17
SF375CX20 (3/8" MP)	20,000 psi (1379 bar)	0.203 (5.16)	0.94
SF562CX20 (9/16" MP)	20,000 psi (1379 bar)	0.250 (6.35)	1.51
1/4" FNPT	15,000 psi (1034 bar)	0.250 (6.35)	1.51
3/8" FNPT	15,000 psi (1034 bar)	0.250 (6.35)	1.51
1/2" FNPT	15,000 psi (1034 bar)	0.250 (6.35)	1.51



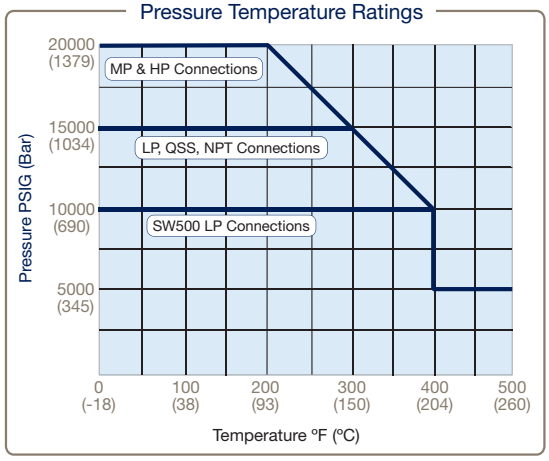

2 Way 1/4" Bore Subsea Ball Valve

Pressure Ratings are determined by the end connections chosen, see chart.
Maximum Temperature rating is determined by the o-ring material.
PAE Ball Valves are designed to be used in fully open or fully closed position.
NPT connections are limited to 400°F max due to PTFE Sealant.

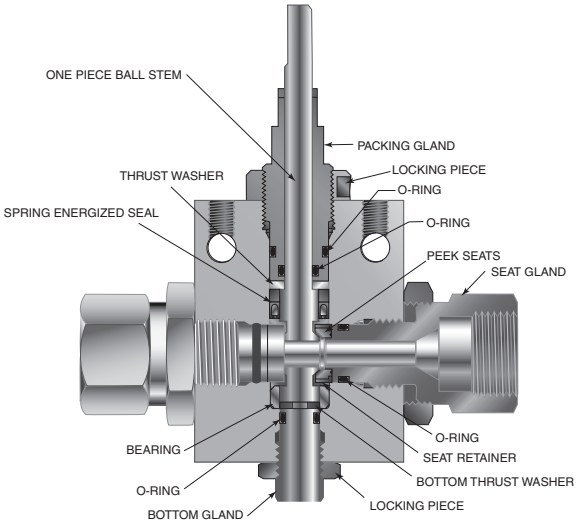

To ensure proper fit use Parker Autoclave tubing

NOTE: Critical gas applications such as Hydrogen or Helium should be evaluated on a case by case basis. Consult factory.
Ball Valves are designed to be operated in fully open or fully closed position

Ball Valve O-ring Options:

V	FKM material: 0° to 400°F (-18° to 204°C)
EPR	Propylene Rubber: -20° to 250°F (-29° to 121°C)

Tel: +45 63 12 83 00 | Email: ps@hymatik.com | www.hymatik.com | Hvidkaervej 27a, DK-5250 Odense SV, Denmark

Ordering Guide:

For complete information on available end connections, see previous page. 2-way ball valves are furnished complete with tube or pipe connections. Standard valve has Buna-N o-rings [250°F (121°C) maximum].

Building a Part Number: *Example: S2B4S20M9*

Example Part Number:	S2B	4	S	20	M9	–	XXX
Ordering Parameters/Options:	Valve Series	Ball Orifice Diameter	Material	Pressure (x 1000 psi)	End Connection		Options
Table Reference: (see below)	A	B	C	D	E		F

A - Valve Series	
S2B	Subsea 2 Way Ball Valve

B - Ball Orifice Diameter	
4	1/4" (6.35mm)

C - Base Material	
S	UNS S31600/S31603 CW 316 SS (options, contact factory)
IN625	IN625 UNS N06625, Inconel 625

D - Pressure (x 1000 psi)	
5	15,000 psi
20	20,000 psi

E - End Connection			
	Connection	MAWP @ RT	Seat Gland Hex
M4	SF250CX20 (1/4" MP)	20,000 psi	1"
M6	SF375CX20 (3/8" MP)	20,000 psi	1"
M9	SF562CX20 (9/16" MP)	20,000 psi	1"
P4	1/4" FNPT	15,000 psi	1"
P6	3/8" FNPT	15,000 psi	1"
P8	1/2" FNPT	15,000 psi	1.38"

F - Options	
V	FKM material: 0° to 400°F (-18° to 204°C)
EPR	Ethylene Propylene Rubber: -20° to 250°F (-29° to 121°C)
SOG	NACE Material, Hardness Verification/Certificate
IN625	UNS N06625 Inconel 625 Materials
AP	All Parts (including collar and gland) optional to use with special materials
K	Antivibration Gland Fitting (Cone and Thread Connections only)
H	Handle/Handle Stop

Basic Repair Kits:

When ordering a basic repair kit add an "**R**" prefix before product model codes A, B, and C (see above). Example: **R**S2B4S

When ordering with "F-Options" add an "**R**" prefix before model codes A, B, C and F (see above). Example: **R**S2B4S-EPR

Contact your Parker Autoclave Engineers Sales Representative with any questions.

Material of Construction:

Item #	Description	Material
1	Stem Seal	Graphite
2	O-Ring	Buna-N
3	O-Ring	Buna-N
4	Lock Nut	316 SS
5	Seat	PEEK
6	Seat Retainer	316 CW SS
7	Bottom Washer	316 SS
8	Lock Nut	316 SS
9	Lock Nut	316 SS
10	Bottom Gland	316 SS
11	Thrust Washer	AMPCO 45
12	1/4" Ball Valve Stem	316 CW SS
13	Thrust Washer	AMPCO 45
14	Body	316 CW SS
15	Packing Gland	316 CW SS
16	2 Way Seat Gland	316 CW SS

Typical spare parts found in Repair Kits

Please reference drawing on Page 5

Tel: +45 63 12 83 00 | Email: ps@hymatik.com | www.hymatik.com | Hvidkaervej 27a, DK-5250 Odense SV, Denmark

1/4" 2 Way Subsea Ball Valve Dimensions:

1/4" 2 Way Subsea Ball Valve

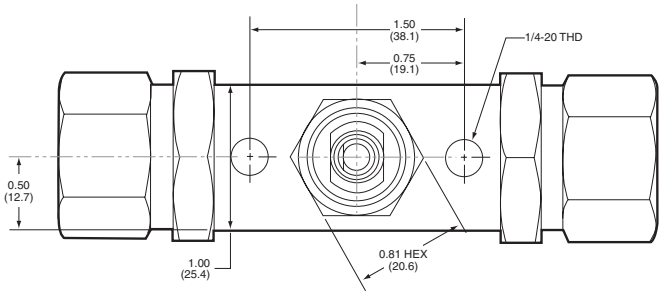

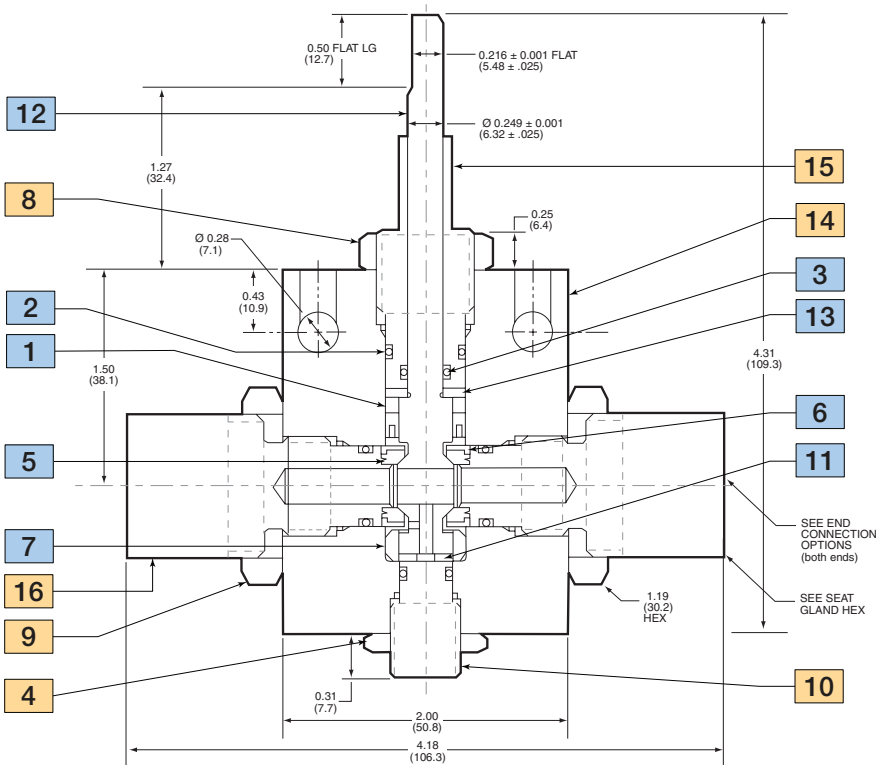

NOTE:
1. MAWP (See Table)
2. Maximum Sea Depth 12,500 FT (3810 meters)
3. Maximum External Pressure 5,500 psi (379 bar)

Dimensions for reference only and subject to change.

NOTE:
Valve Stem has no stop supplied as standard.
Stem will rotate 360° unless used with Subsea Actuator or Handle/Stop is ordered.

Tel: +45 63 12 83 00 | Email: ps@hymatik.com | www.hymatik.com | Hvidkaervej 27a, DK-5250 Odense SV, Denmark

2 Way Subsea Series: 3/8" (9.52mm) Orifice

Pressures to 20,000 psi (1379 bar)



Connection Type	MAWP at Room Temperature	Minimum Orifice Inches (mm)	Rated C_V
SF375CX20	20,000 psi (1379 bar)	0.203 (5.16)	0.94
SF562CX (3/8" MP)	20,000 psi (1379 bar)	0.312 (7.92)	3.3
SF750CX20 (3/4" MP)	20,000 psi (1379 bar)	0.328 (8.33)	3.4
1/4" FNPT	15,000 psi (1034 bar)	0.375 (9.52)	5.2
3/8" FNPT	15,000 psi (1034 bar)	0.375 (9.52)	5.2
1/2" FNPT	15,000 psi (1034 bar)	0.375 (9.52)	5.2

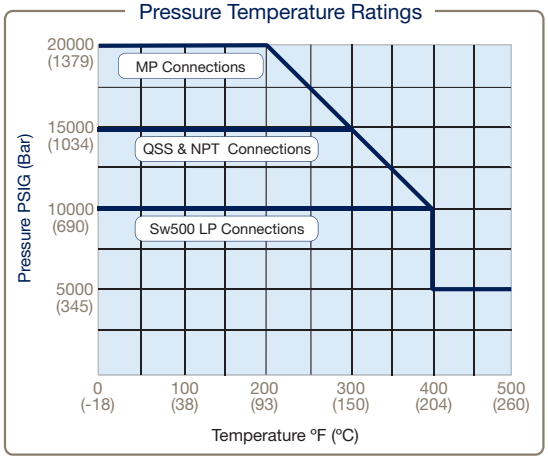

2 Way 3/8" Bore Subsea Ball Valve

Pressure Ratings are determined by the end connections chosen, see chart.
Maximum Temperature rating is determined by the o-ring material.
PAE Ball Valves are designed to be used in fully open or fully closed position.
NPT connections are limited to 400°F max due to PTFE Sealant.

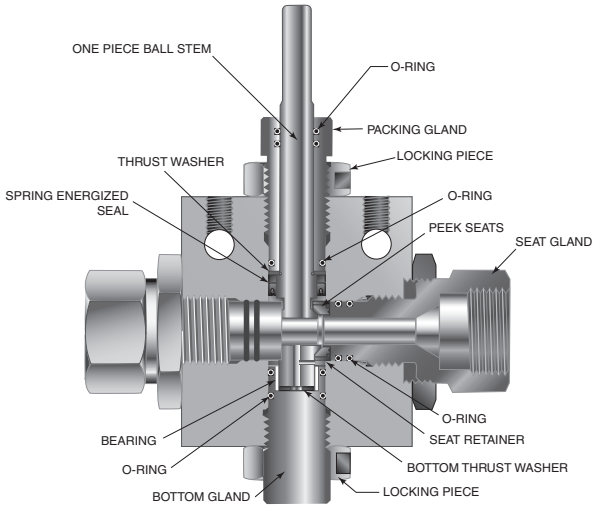

To ensure proper fit use Parker Autoclave tubing

NOTE: Critical gas applications such as Hydrogen or Helium should be evaluated on a case by case basis. Consult factory.
Ball Valves are designed to be operated in fully open or fully closed position

Ball Valve O-ring Options:

V	FKM material: 0° to 400°F (-18° to 204°C)
EPR	Propylene Rubber: -20° to 250°F (-29° to 121°C)

Tel: +45 63 12 83 00 | Email: ps@hymatik.com | www.hymatik.com | Hvidkaervej 27a, DK-5250 Odense SV, Denmark

Ordering Guide:

For complete information on available end connections, see previous page. 2-way ball valves are furnished complete with tube or pipe connections. Standard valve has Buna-N o-rings [250°F (121°C) maximum].

Building a Part Number: *Example: S2B6S20M9*

Example Part Number:	S2B	6	S	20	M9	–	XXX
Ordering Parameters/Options:	Valve Series	Ball Orifice Diameter	Material	Pressure (x 1000 psi)	End Connection		Options
Table Reference: (see below)	A	B	C	D	E		F

A - Valve Series	
S2B	Subsea 2 Way Ball Valve

B - Ball Orifice Diameter	
6	3/8" (9.52mm)

C - Base Material	
S	UNS S31600/S31603 CW 316 SS (options, contact factory)
IN625	IN625 UNS N06625, Inconel 625

D - Pressure (x 1000 psi)	
5	15,000 psi
20	20,000 psi

E - End Connection			
	Connection	MAWP @ RT	Seat Gland Hex
M6	SF375CX (3/8" MP)	20,000 psi	1.38"
M9	SF562CX20 (9/16" MP)	20,000 psi	1.38"
M12	SF750CX20 (3/4" MP)	20,000 psi	1.38"
P4	1/4" NPT	15,000 psi	1.38"
P6	3/8" NPT	15,000 psi	1.38"
P8	1/2" NPT	15,000 psi	1.38"

F - Options	
V	FKM material: 0° to 400°F (-18° to 204°C)
EPR	Ethylene Propylene Rubber: -20° to 250°F (-29° to 121°C)
SOG	NACE Material, Hardness Verification/Certificate
IN625	UNS N06625 Inconel 625 Materials
AP	All Parts (including collar and gland) optional to use with special materials
K	Antivibration Gland Fitting (Cone and Thread Connections only)
H	Handle/Handle Stop

Basic Repair Kits:

When ordering a basic repair kit add an "**R**" prefix before product model codes A, B, and C (see above). Example: **R**S2B6S

When ordering with "F-Options" add an "**R**" prefix before model codes A, B, C and F (see above). Example: **R**S2B6S-EPR

Contact your Parker Autoclave Engineers Sales Representative with any questions.

Material of Construction:

Item #	Description	Material
1	Stem Seal	Graphite
2	O-Ring	Buna-N
3	O-Ring	Buna-N
4	O-Ring	Buna-N
5	Thrust Washer	AMPCO 45
6	Seat	Arlon 1260
7	Seat Retainer	316 CW SS
8	Locking Piece	316 SS
9	Lock Nut	316 SS
10	Bottom Gland	316 SS
11	Thrust Washer	AMPCO 45
12	Bottom Bearing	AMPCO 45
13	Body	316 CW SS
14	Stem	316 CW SS
15	Packing Gland	316 CW SS
16	2 Way Seat Gland	316 CW SS

Typical spare parts found in Repair Kits

Please reference drawing on Page 8

3/8" 2 Way Subsea Ball Valve Dimensions:

3/8" 2 Way Subsea Ball Valve

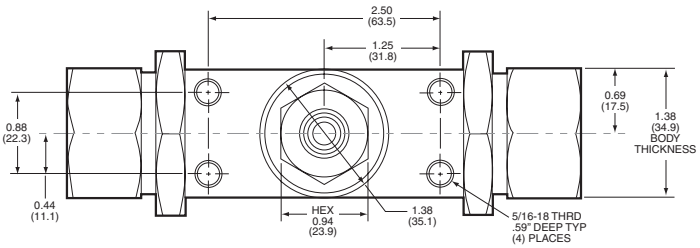

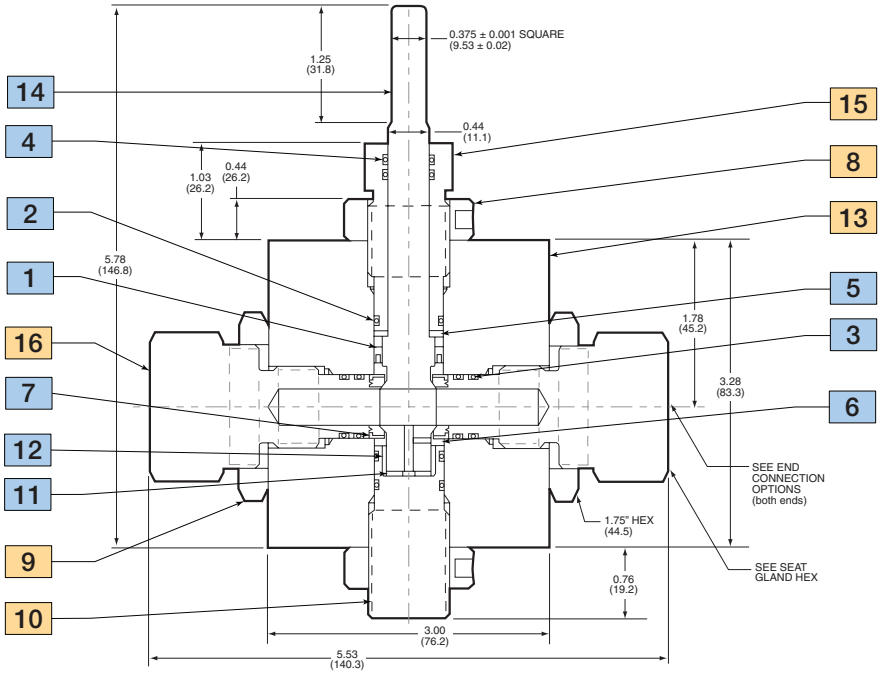

NOTE:
1. MAWP (See Table)
2. Maximum Sea Depth 11,500 FT (3505 meters)
3. Maximum External Pressure 5,500 psi (379 bar)

Dimensions for reference only and subject to change.

NOTE:
Valve Stem has no stop supplied as standard.
Stem will rotate 360° unless used with Subsea Actuator or Handle/Stop is ordered.

Tel: +45 63 12 83 00 | Email: ps@hymatik.com | www.hymatik.com | Hvidkaervej 27a, DK-5250 Odense SV, Denmark

2 Way Subsea Series: 1/2" (12.7mm) Orifice

Pressures to 15,000 psi (1034 bar)

Connection Type	MAWP at Room Temperature	Minimum Orifice Inches (mm)	Rated C_V
SF750CX20 (3/4" MP)	15,000 psi (1034 bar)	0.500 (12.70	10.2
SF1000CX20 (1" MP)	15,000 psi (1034 bar)	0.500 (12.70)	10.2
1/2" FNPT	15,000 psi (1034 bar)	0.500 (12.70)	10.2
3/4" FNPT	10,000 psi (690 bar)	0.500 (12.70)	10.2
1" FNPT	10,000 psi (690 bar)	0.500 (12.70)	10.2



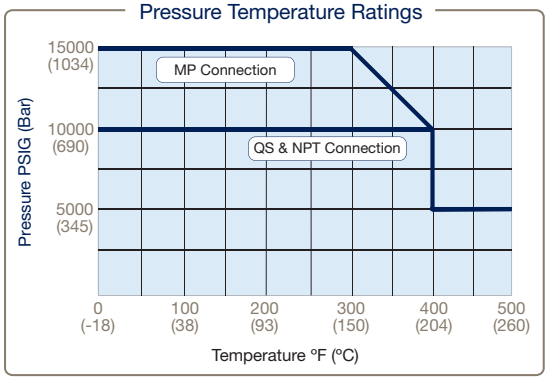

2 Way 1/2" Bore Subsea Ball Valve

Pressure Ratings are determined by the end connections chosen, see chart.
Maximum Temperature rating is determined by the o-ring material.
PAE Ball Valves are designed to be used in fully open or fully closed position.
NPT connections are limited to 400°F max due to PTFE Sealant.

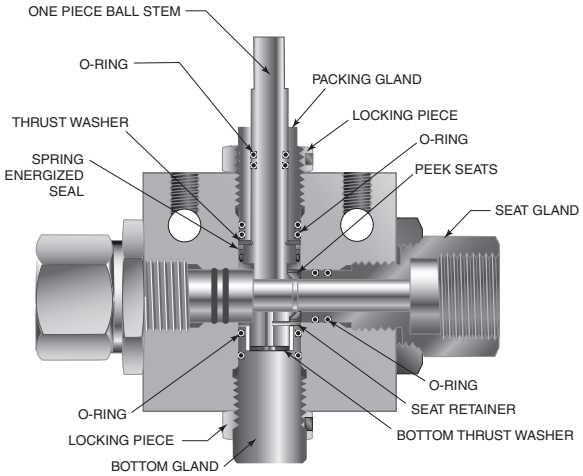

To ensure proper fit use Parker Autoclave tubing

NOTE: Critical gas applications such as Hydrogen or Helium should be evaluated on a case by case basis. Consult factory.
Ball Valves are designed to be operated in fully open or fully closed position

Ball Valve O-ring Options:

V	FKM material: 0° to 400°F (-18° to 204°C)
EPR	Propylene Rubber: -20° to 250°F (-29° to 121°C)

Tel: +45 63 12 83 00 | Email: ps@hymatik.com | www.hymatik.com | Hvidkaervej 27a, DK-5250 Odense SV, Denmark

Ordering Guide:

For complete information on available end connections, see previous page. 2-way ball valves are furnished complete with tube or pipe connections. Standard valve has Buna-N o-rings [250°F (121°C) maximum].

Building a Part Number: *Example: S2B8S15M16*

Example Part Number:	**S2B**	**8**	**S**	**15**	**M16**	–	**XXX**
Ordering Parameters/Options:	Valve Series	Ball Orifice Diameter	Material	Pressure (x 1000 psi)	End Connection		Options
Table Reference: (see below)	A	B	C	D	E		F

A - Valve Series	
S2B	Subsea 2 Way Ball Valve

B - Ball Orifice Diameter	
8	1/2" (12.7mm)

C - Base Material	
S	UNS S31600/S31603 CW 316 SS (options, contact factory)
IN625	IN625 UNS N06625, Inconel 625

D - Pressure (x 1000 psi)	
10	10,000 psi
15	15,000 psi

E - End Connection			
	Connection	MAWP @ RT	Seat Gland Hex
M12	SF750CX20 (3/4" MP)	15,000 psi	1.75"
M16	SF1000CX20 (1" MP)	15,000 psi	1.75"
P8	1/2" NPT	10,000 psi	1.75"
P12	3/4" NPT	10,000 psi	1.75"
P16	1" NPT	10,000 psi	1.75"

F - Options	
V	FKM material: 0° to 400°F (-18° to 204°C)
EPR	Ethylene Propylene Rubber: -20° to 250°F (-29° to 121°C)
SOG	NACE Material, Hardness Verification/Certificate
IN625	UNS N06625 Inconel 625 Materials
AP	All Parts (including collar and gland) optional to use with special materials
K	Antivibration Gland Fitting (Cone and Thread Connections only)
H	Handle/Handle Stop

Basic Repair Kits:

When ordering a basic repair kit add an "**R**" prefix before product model codes A, B, and C (see above). Example: **R**S2B8S

When ordering with "F-Options" add an "**R**" prefix before model codes A, B, C and F (see above). Example: **R**S2B8S-EPR

Contact your Parker Autoclave Engineers Sales Representative with any questions.

Material of Construction:

Item #	Description	Material
1	O-Ring	Buna-N
2	O-Ring	Buna-N
3	O-Ring	Buna-N
4	U-Cup Seal Assembly	Graphite/Carbon PTFE
5	Thrust Washer	AMPCO 45
6	Seat	316 CW SS
7	Seat Retainer	316 CW SS
8	Lock Nut	316 SS
9	Packing Gland	316 CW SS
10	Bottom Bearing	AMPCO 45
11	Thrust Washer	AMPCO 45
12	Bottom Gland	316 SS
13	Stem	316 CW SS
14	Locking Piece	316 SS
15	2 Way Seat Gland	316 CW SS
16	Body	316 CW SS

Typical spare parts found in Repair Kits

Please reference drawing on Page 11

Tel: +45 63 12 83 00 | Email: ps@hymatik.com | www.hymatik.com | Hvidkaervej 27a, DK-5250 Odense SV, Denmark

1/2" 2 Way Subsea Ball Valve Dimensions:

1/2" 2 Way Subsea Ball Valve

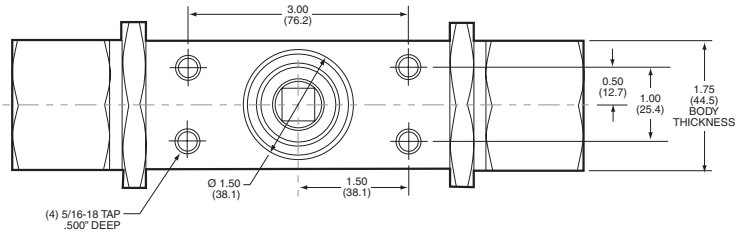

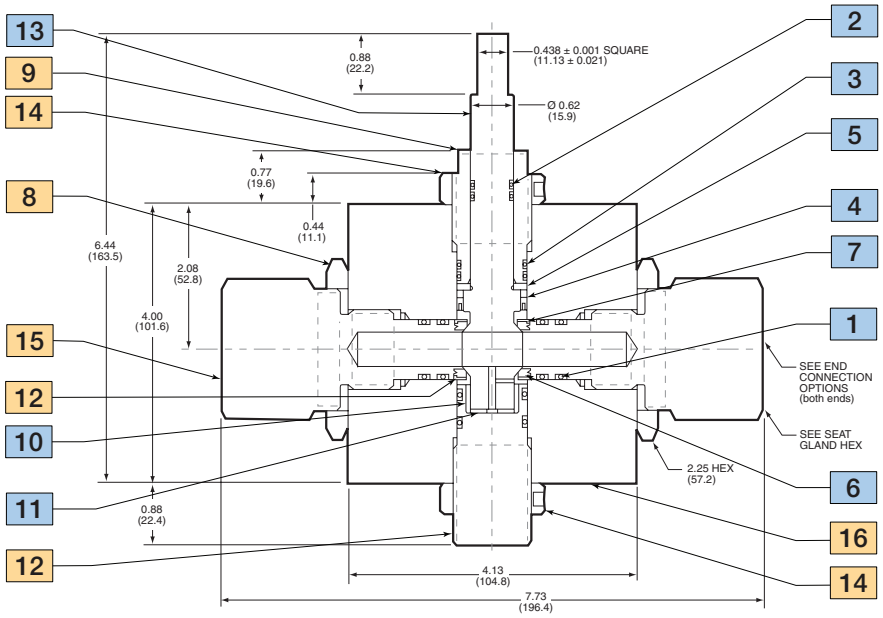

NOTE:
1. MAWP (See Table)
2. Maximum Sea Depth 11,500 FT (3505 meters)
3. Maximum External Pressure 5,500 psi (379 bar)

Dimensions for reference only and subject to change.

NOTE:
Valve Stem has no stop supplied as standard.
Stem will rotate 360° unless used with Subsea Actuator or Handle/Stop is ordered.

Tel: +45 63 12 83 00 | Email: ps@hymatik.com | www.hymatik.com | Hvidkaervej 27a, DK-5250 Odense SV, Denmark

2 Way Subsea Series: 3/4" (19mm) Orifice

Pressures to 15,000 psi (1034 bar)

Connection Type	MAWP at Room Temperature	Minimum Orifice Inches (mm)	Rated C_V
SF1000CX10 (1" MP)	15,000 psi (1034 bar)	0.688 (17.48)	21
3/4" FNPT	10,000 psi (690 bar)	0.750 (19.05)	24
1" FNPT	10,000 psi (690 bar)	0.750 (19.05)	24



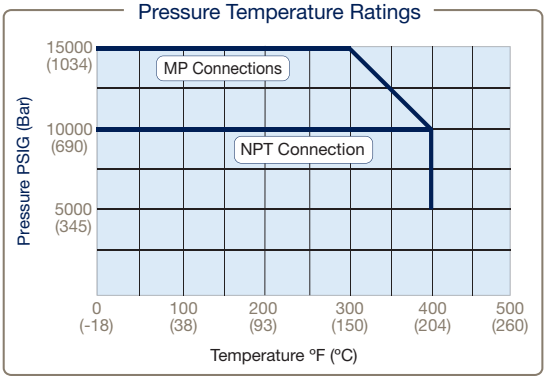

2 Way 3/4" Bore Subsea Ball Valve

Pressure Ratings are determined by the end connections chosen, see chart.
Maximum Temperature rating is determined by the o-ring material.
PAE Ball Valves are designed to be used in fully open or fully closed position.
NPT connections are limited to 400°F max due to PTFE Sealant.

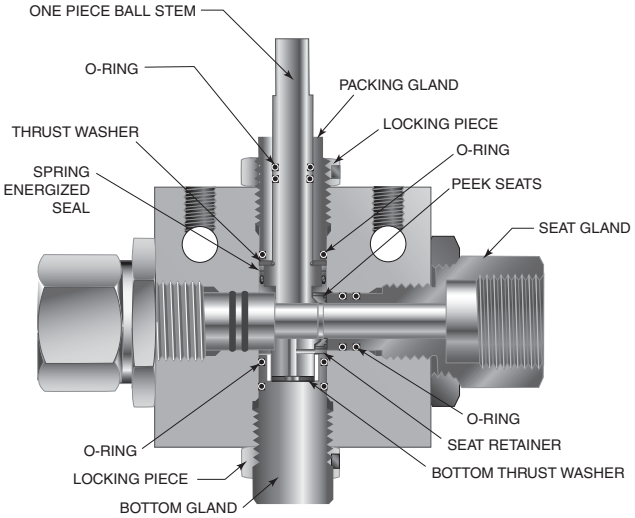

To ensure proper fit use Parker Autoclave tubing

NOTE: Critical gas applications such as Hydrogen or Helium should be evaluated on a case by case basis. Consult factory.
Ball Valves are designed to be operated in fully open or fully closed position

Ball Valve O-ring Options:

V	FKM material: 0° to 400°F (-18° to 204°C)
EPR	Propylene Rubber: -20° to 250°F (-29° to 121°C)

Tel: +45 63 12 83 00 | Email: ps@hymatik.com | www.hymatik.com | Hvidkaervej 27a, DK-5250 Odense SV, Denmark

Ordering Guide:

For complete information on available end connections, see previous page. 2-way ball valves are furnished complete with tube or pipe connections. Standard valve has Buna-N o-rings [250°F (121°C) maximum].

Building a Part Number: ***Example: S2B12S15M12***

Example Part Number:	S2B	12	S	15	M12	–	XXX
Ordering Parameters/Options:	Valve Series	Ball Orifice Diameter	Material	Pressure (x 1000 psi)	End Connection		Options
Table Reference: (see below)	A	B	C	D	E		F

A - Valve Series	
S2B	Subsea 2 Way Ball Valve

B - Ball Orifice Diameter	
12	3/4" (19.05mm)

C - Base Material	
S	UNS S31600/S31603 CW 316 SS (options, contact factory)
IN625	IN625 UNS N06625, Inconel 625

D - Pressure (x 1000 psi)	
10	10,000 psi
15	15,000 psi

E - End Connection			
	Connection	MAWP @ RT	Seat Gland Hex
M16	SF1000CX20 (1" MP)	15,000 psi	1.88"
P12	3/4" NPT	10,000 psi	1.88"
P16	1" NPT	10,000 psi	1.88"

F - Options	
V	FKM material: 0° to 400°F (-18° to 204°C)
EPR	Ethylene Propylene Rubber: -20° to 250°F (-29° to 121°C)
SOG	NACE Material, Hardness Verification/Certificate
IN625	UNS N06625 Inconel 625 Materials
AP	All Parts (including collar and gland) optional to use with special materials
K	Antivibration Gland Fitting (Cone and Thread Connections only)
H	Handle/Handle Stop

Basic Repair Kits:

When ordering a basic repair kit add an "**R**" prefix before product model codes A, B, and C (see above). Example: **R**S2B12S

When ordering with "F-Options" add an "**R**" prefix before model codes A, B, C and F (see above). Example: **R**S2B12S-EPR

Contact your Parker Autoclave Engineers Sales Representative with any questions.

Material of Construction:

Item #	Description	Material
1	Stem Seal	Graphite
2	O-Ring	Buna-N
3	O-Ring	Buna-N
4	Retaining Ring	316 SS
5	Retaining Ring	316 SS
6	Locknut	316 SS
7	Seat	30% Carbon Filled Peek
8	Seat Retainer	Super Duplex Zeron 100
9	Thrust Washer	AMPCO 45
10	Top Bearing	316 SS
11	Locking Piece	316 SS
12	O-Ring Backup	AMPCO 45
13	Thrust Washer	AMPCO 45
14	Bottom Bearing	AMPCO 45
15	Stem	316 CW SS
16	O-Ring Backup	AMPCO 45
17	Seat Gland	316 CW SS
18	Bottom Gland	316 SS
19	Packing Gland	316 SS
20	Body	316 CW SS

Typical spare parts found in Repair Kits

Please reference drawing on Page 14

3/4" 2 Way Subsea Ball Valve Dimensions:

3/4" 2 Way Subsea Ball Valve

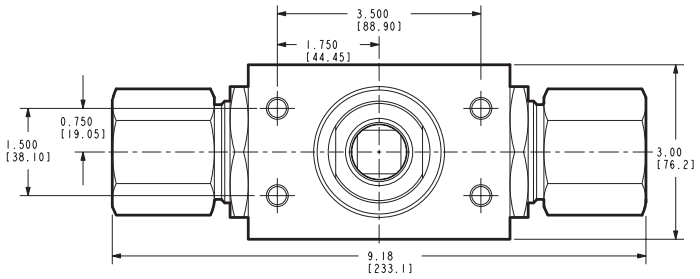

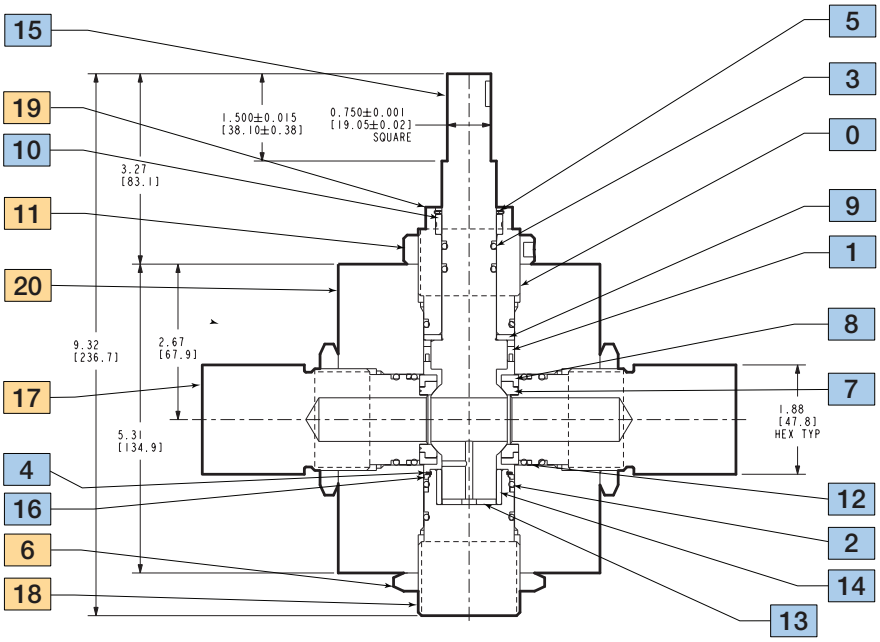

NOTE:
1. MAWP (See Table)
2. Maximum Sea Depth 11,500 FT (3505 meters)
3. Maximum External Pressure 5,000 psi (379 bar)

Dimensions for reference only and subject to change.

NOTE:
Valve Stem has no stop supplied as standard.
Stem will rotate 360° unless used with Subsea Actuator or Handle/Stop is ordered.

Tel: +45 63 12 83 00 | Email: ps@hymatik.com | www.hymatik.com | Hvidkaervej 27a, DK-5250 Odense SV, Denmark

2 Way Subsea Series: 1" (15.4mm) Orifice

Pressures to 10,000 psi (690 bar)

Connection Type	MAWP at Room Temperature	Minimum Orifice Inches (mm)	Rated C_V
SF1500CX10 (1.5" MP)	10,000 psi (690 bar)	0.938 (23.83)	34
1" NPT	10,000 psi (690 bar)	1.00 (25.40)	37.2



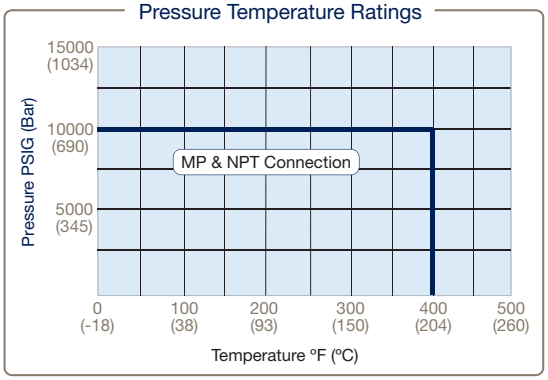

2 Way 1" Bore Subsea Ball Valve

Pressure Ratings are determined by the end connections chosen, see chart.
Maximum Temperature rating is determined by the o-ring material.
PAE Ball Valves are designed to be used in fully open or fully closed position.
NPT connections are limited to 400°F max due to PTFE Sealant.

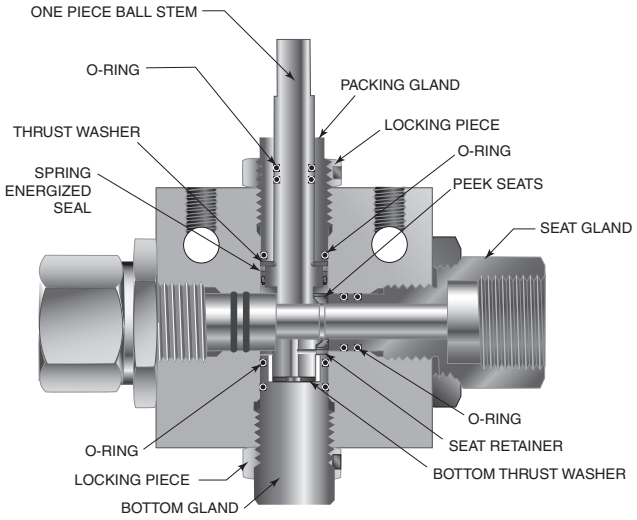

To ensure proper fit use Parker Autoclave tubing

NOTE: Critical gas applications such as Hydrogen or Helium should be evaluated on a case by case basis. Consult factory.
Ball Valves are designed to be operated in fully open or fully closed position

Ball Valve O-ring Options:

V	FKM material: 0° to 400°F (-18° to 204°C)
EPR	Propylene Rubber: -20° to 250°F (-29° to 121°C)

Ordering Guide:

For complete information on available end connections, see previous page. 2-way ball valves are furnished complete with tube or pipe connections. Standard valve has Buna-N o-rings [250°F (121°C) maximum].

Building a Part Number: ***Example: S2B16S10P16***

Example Part Number:	S2B	16	S	10	P16	–	XXX
Ordering Parameters/Options:	Valve Series	Ball Orifice Diameter	Material	Pressure (x 1000 psi)	End Connection		Options
Table Reference: (see below)	A	B	C	D	E		F

A - Valve Series	
S2B	Subsea 2 Way Ball Valve

B - Ball Orifice Diameter	
16	1" (25.4mm)

C - Base Material	
S	UNS S31600/S31603 CW 316 SS (options, contact factory)
IN625	IN625 UNS N06625, Inconel 625

D - Pressure (x 1000 psi)	
10	10,000 psi

E - End Connection			
	Connection	MAWO @ RT	Seat Gland Hex
M24	SF1500CX (1-1/2" MP)	10,000 psi	2.75"
P16	1" NPT	10,000 psi	2.75"

F - Options	
V	FKM material: 0° to 400°F (-18° to 204°C)
EPR	Ethylene Propylene Rubber: -20° to 250°F (-29° to 121°C)
SOG	NACE Material, Hardness Verification/Certificate
IN625	UNS N06625 Inconel 625 Materials
AP	All Parts (including collar and gland) optional to use with special materials
K	Antivibration Gland Fitting (Cone and Thread Connections only)
H	Handle/Handle Stop

Basic Repair Kits:

When ordering a basic repair kit add an "**R**" prefix before product model codes A, B, and C (see above). Example: **R**S2B16S

When ordering with "F-Options" add an "**R**" prefix before model codes A, B, C and F (see above). Example: **R**S2B16S-EPR

Contact your Parker Autoclave Engineers Sales Representative with any questions.

Material of Construction:

Item #	Description	Material
1	Body	316 CW SS
2	Bottom Bearing	AMPCO 45
3	Bottom Gland	A286 SS
4	Cap Screw	316 SS
5	Locking Device	316 SS
6	Locking Piece	316 SS
7	O-Ring Backup	Carbon Filled Peek
8	O-Ring Backup	AMPCO 45
9	O-Ring	Buna-N
10	O-Ring	Buna-N
11	Packing Gland	A286 SS
12	Retaining Ring	316 SS
13	Retaining Ring	302 SS
14	Seat	Carbon Filled Peek
15	Seat Gland	316 SS
16	Seat Retainer	316 CW SS
17	Cap Screw	316 SS
18	Stem Seal w/ Spring	PTFE w/ Graphite
19	Stem	316 CW SS
20	Thrust Washer	AMPCO 45
21	Thrust Washer	AMPCO 45
22	Top Bearing	Virgin Peek

Typical spare parts found in Repair Kits

Please reference drawing on Page 17

Tel: +45 63 12 83 00 | Email: ps@hymatik.com | www.hymatik.com | Hvidkaervej 27a, DK-5250 Odense SV, Denmark

1" 2 Way Subsea Ball Valve Dimensions:

1" 2 Way Subsea Ball Valve

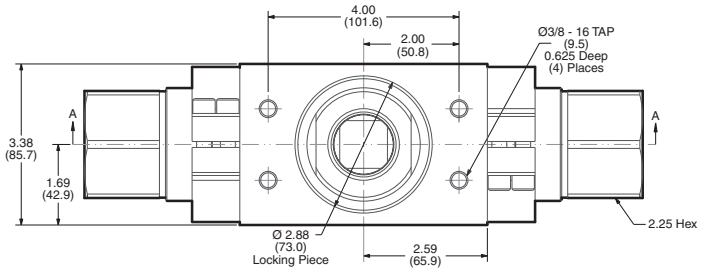

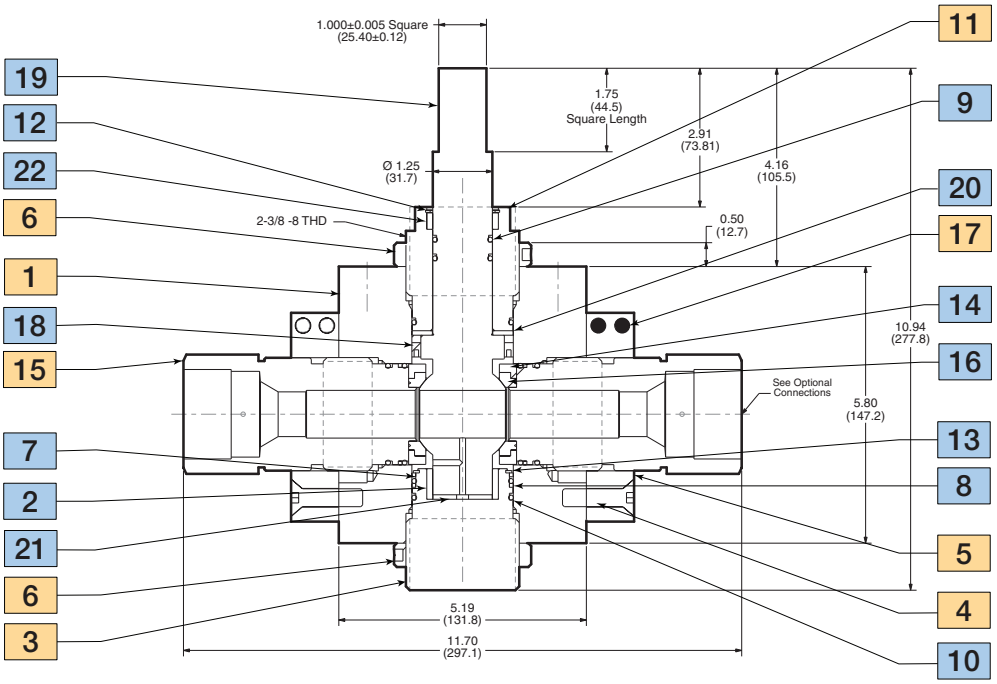

NOTE:
1. MAWP (See Table)
2. Maximum Sea Depth 11,150 FT (3400 meters)
3. Maximum External Pressure 5,000 psi (345 bar)

Dimensions for reference only and subject to change.

NOTE:
Valve Stem has no stop supplied as standard.
Stem will rotate 360° unless used with Subsea Actuator or Handle/Stop is ordered.

Tel: +45 63 12 83 00 | Email: ps@hymatik.com | www.hymatik.com | Hvidkaervej 27a, DK-5250 Odense SV, Denmark

3 Way Subsea Series: 3/16" (4.77mm) Orifice

Pressures to 20,000 psi (1379 bar)



Connection Type	MAWP at Room Temperature	Minimum Orifice Inches (mm)	Rated C_V
SF250CX (1/4" MP)	20,000 psi (1379 bar)	0.109 (2.77)	0.26
SF375CX (3/8" MP)	20,000 psi (1379 bar)	0.188 (4.77)	0.5
SF562CX (9/16" MP)	20,000 psi (1379 bar)	0.188 (4.77)	0.5
F250C (1/4" HP)	20,000 psi (1379 bar)	0.094 (2.39)	0.18
F375C (3/8" HP)	20,000 psi (1379 bar)	0.125 (3.17)	0.33
1/4" FNPT	15,000 psi (1034 bar)	0.188 (4.77)	0.50
3/8" FNPT	15,000 psi (1034 bar)	0.188 (4.77)	0.50

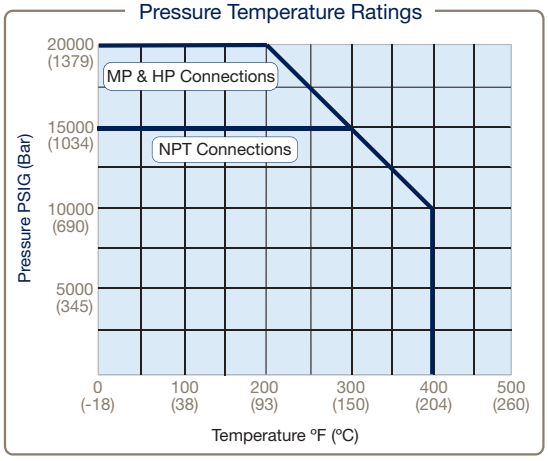

3 Way 3/16" Bore Subsea Ball Valve

Pressure Ratings are determined by the end connections chosen, see chart.
Maximum Temperature rating is determined by the o-ring or PEEK seat material
Note: Side inlet pressure not recommended. Bottom inlet pressure only.
PAE Ball Valves are designed to be used in fully open or fully closed position.
NPT connections are limited to 400°F max due to PTFE Sealant.

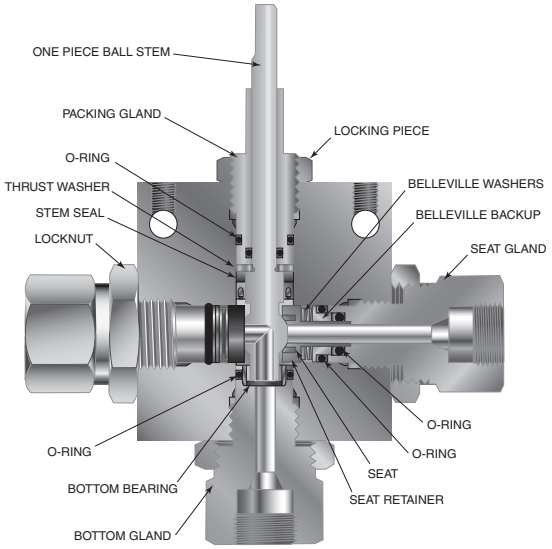

To ensure proper fit use Parker Autoclave tubing

NOTE: Critical gas applications such as Hydrogen or Helium should be evaluated on a case by case basis. Consult factory.
Ball Valves are designed to be operated in fully open or fully closed position

Ball Valve O-ring Options:

V	FKM material: 0° to 400°F (-18° to 204°C)
EPR	Propylene Rubber: -20° to 250°F (-29° to 121°C)

See ball valve actuator section for full description, additional information, and options.additional information, and options.

Tel: +45 63 12 83 00 | Email: ps@hymatik.com | www.hymatik.com | Hvidkaervej 27a, DK-5250 Odense SV, Denmark

Ordering Guide:

For complete information on available end connections, see previous page. 3-way ball valves are furnished complete with tube or pipe connections. Standard valve has Buna-N o-rings [250°F (121°C) maximum].

Building a Part Number: *Example: S3B3S20M6*

Example Part Number:	S3B	3	S	20	M6	-	XXX
Ordering Parameters/Options:	Valve Series	Ball Orifice Diameter	Material	Pressure (x 1000 psi)	End Connection		Options
Table Reference: (see below)	A	B	C	D	E		F

A - Valve Series	
S3B	3 Way Subsea Switching Valve (180° Handle Turn)
S3BD	3 Way Subsea Diverter Valve (90° Turn)

B - Ball Orifice Diameter	
3	3/16" (4.77mm)

C - Base Material	
S	UNS S31600/S31603 CW 316 SS (options, contact factory)
IN625	IN625 UNS N06625, Inconel 625

D - Pressure (x 1000 psi)	
15	15,000 psi
20	20,000 psi

E - End Connection			
	Connection	MAWP @ RT	Seat Gland Hex
M4	SF250CX20 (1/4" MP)	20,000 psi	1"
M6	SF375CX20 (3/8" MP)	20,000 psi	1"
H4	F250C (1/4" HP)	20,000 psi	1"
H6	F375C (3/8" HP)	20,000 psi	1"
P4	1/4" FNPT	15,000 psi	1"
P6	3/8" FNPT	15,000 psi	1"

F - Options	
V	FKM material: 0° to 400°F (-18° to 204°C)
EPR	Ethylene Propylene Rubber: -20° to 250°F (-29° to 121°C)
SOG	NACE Material, Hardness Verification/Certificate
IN625	UNS N06625 Inconel 625 Materials
AP	All Parts (including collar, gland and packing gland) optional to use with special materials
K	Antivibration Gland Fitting (Cone and Thread Connections only)
H	Handle/Handle Stop

Basic Repair Kits:

When ordering a basic repair kit add an "**R**" prefix before product model codes A, B, and C (see above).
Example: **R**S3B3S

When ordering with "F-Options" add an "**R**" prefix before model codes A, B, C and F (see above).
Example: **R**S3B3S-EPR

Contact your Parker Autoclave Engineers Sales Representative with any questions.

Diverter Flow Control:

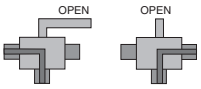

*3-Way Diverter Valve
90° Turn (3BD3 Series)

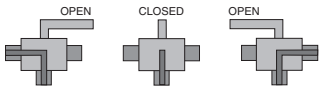

3-Way Switching Valve
180° Turn (3B3 Series)

*The Diverter Valve design permits inlet flow through the bottom port. Outlet flow may be diverted to either valve side port.

Material of Construction:

Item #	Description	Material
1	Stem Seal w/ Spring	PTFE w/ Graphite
2	Belleville Washer	302 SS
3	O-Ring	Buna-N
4	O-Ring	Buna-N
5	O-Ring	Buna-N
6	Locking Nut	316 SS
7	Belleville Washer Backup	316 CW SS
8	Seat	ARLON 1260
9	Seat Retainer	Nitronic 50 HS
10	Locknut	316 SS
11	Bottom Bearing	AMPCO 45
12	Stem	316 CW SS
13	Thrust Washer	AMPCO 45
14	Bottom Gland	316 CW SS
15	Packing Gland	316 CW SS
16	Body	316 CW SS
17	Seat Gland	316 CW SS

Typical spare parts found in Repair Kits

Please reference drawing on Page 20

3/16" 3 Way Subsea Ball Valve Dimensions:

3/16" 3 Way Subsea Ball Valve

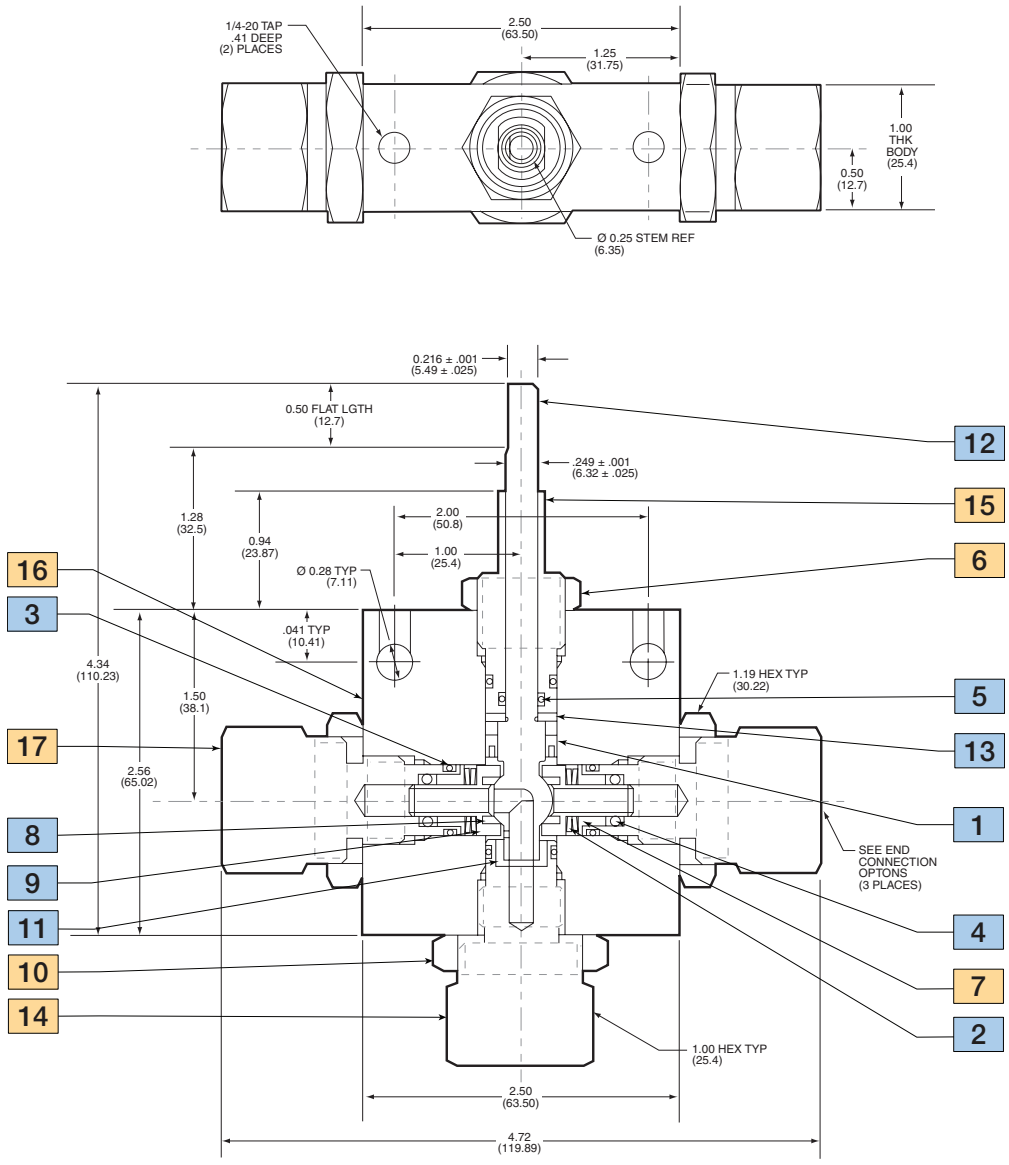

NOTE:
1. MAWP (See Table)
2. Maximum Sea Depth 10,300 FT (3140 meters)
3. Maximum External Pressure 4,500 psi (310 bar)

Dimensions for reference only and subject to change.

NOTE:
Valve Stem has no stop supplied as standard.
Stem will rotate 360° unless used with Subsea Actuator or Handle/Stop is ordered.

Tel: +45 63 12 83 00 | Email: ps@hymatik.com | www.hymatik.com | Hvidkaervej 27a, DK-5250 Odense SV, Denmark

3 Way Subsea Series: 3/8" (8.33mm) Orifice

Pressures to 10,000 psi (690 bar)

Connection Type	MAWP at Room Temperature	Minimum Orifice Inches (mm)	Rated C_V
SF562CX20 (9/16" MP)	10,000 psi (690 bar)	0.312 (7.92)	2.0
SF750CX20 (3/4" MP)	10,000 psi (690 bar)	0.326 (8.28)	2.1
1/4" FNPT	10,000 psi (690 bar)	0.326 (8.28)	2.1
3/8" FNPT	10,000 psi (690 bar)	0.326 (8.28)	2.1
1/2" FNPT	10,000 psi (690 bar)	0.326 (8.28)	2.1



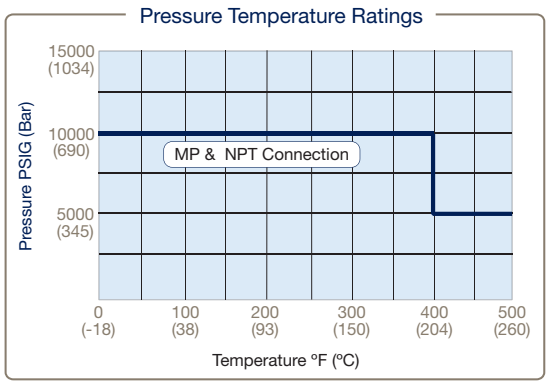

3 Way 3/8" Bore Subsea Ball Valve

Pressure Ratings are determined by the end connections chosen, see chart.
Maximum Temperature rating is determined by the o-ring or PEEK seat material
Note: Side inlet pressure not recommended. Bottom inlet pressure only.
PAE Ball Valves are designed to be used in fully open or fully closed position.
NPT connections are limited to 400°F max due to PTFE Sealant.

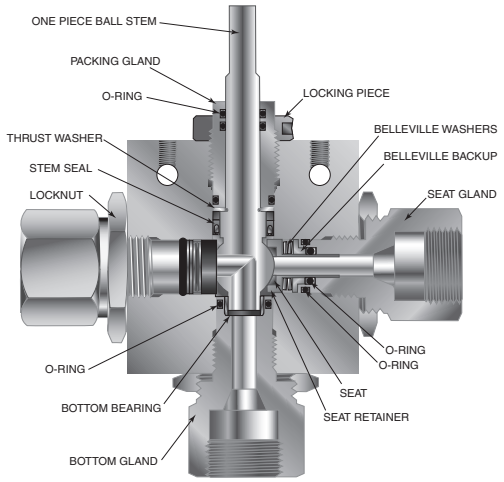

To ensure proper fit use Parker Autoclave tubing

NOTE: Critical gas applications such as Hydrogen or Helium should be evaluated on a case by case basis. Consult factory.
Ball Valves are designed to be operated in fully open or fully closed position

Ball Valve O-ring Options:

V	FKM material: 0° to 400°F (-18° to 204°C)
EPR	Propylene Rubber: -20° to 250°F (-29° to 121°C)

Flow Configuration

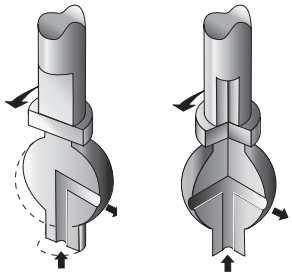

3-Way Switching
180 Turn

3-Way Diverting
90° Turn

See ball valve actuator section for full description, additional information, and options.additional information, and options.

Tel: +45 63 12 83 00 | Email: ps@hymatik.com | www.hymatik.com | Hvidkaervej 27a, DK-5250 Odense SV, Denmark

Ordering Guide:

For complete information on available end connections, see previous page. 3-way ball valves are furnished complete with tube or pipe connections. Standard valve has Buna-N o-rings [250°F (121°C) maximum].

Building a Part Number: *Example: S3B6S10M9*

Example Part Number:	S3B	6	S	10	M9	–	XXX
Ordering Parameters/Options:	Valve Series	Ball Orifice Diameter	Material	Pressure (x 1000 psi)	End Connection		Options
Table Reference: (see below)	A	B	C	D	E		F

A - Valve Series	
S3B	3 Way Subsea Ball Valve
S3BD	3 Way Subsea Diverter

B - Ball Orifice Diameter	
6	3/8" (9.52mm)

C - Base Material	
S	UNS S31600/S31603 CW 316 SS (options, contact factory)
IN625	IN625 UNS N06625, Inconel 625

D - Pressure (x 1000 psi)	
10	10,000 psi

E - End Connection			
	Connection	MAWO @ RT	Seat Gland Hex
M9	SF562CX20 (9/16" MP)	10,000 psi	1.38"
M12	SF750CX20 (3/4" MP)	10,000 psi	1.38"
P4	1/4" NPT	10,000 psi	1.38"
P6	3/8" NPT	10,000 psi	1.38"
P8	1/2" NPT	10,000 psi	1.38"

F - Options	
V	FKM material: 0° to 400°F (-18° to 204°C)
EPR	Ethylene Propylene Rubber: -20° to 250°F (-29° to 121°C)
SOG	NACE Material, Hardness Verification/Certificate
IN625	UNS N06625 Inconel 625 Materials
AP	All Parts (including collar and gland) optional to use with special materials
K	Antivibration Gland Fitting (Cone and Thread Connections only)
H	Handle/Handle Stop

Basic Repair Kits:

When ordering a basic repair kit add an "**R**" prefix before product model codes A, B, and C (see above).
Example: **R**S3B6S

When ordering with "F-Options" add an "**R**" prefix before model codes A, B, C and F (see above).
Example: **R**S3B6S-EPR

Contact your Parker Autoclave Engineers Sales Representative with any questions.

Diverter Flow Control:

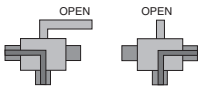

*3-Way Diverter Valve
90° Turn (3BD3 Series)

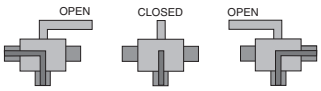

3-Way Switching Valve
180° Turn (3B3 Series)

*The Diverter Valve design permits inlet flow through the bottom port. Outlet flow may be diverted to either valve side port with only a 90° turn.

Material of Construction:

Item #	Description	Material
1	Stem Seal w/ Spring	PTFE w/ Graphite
2	Belleville Washer	302 SS
3	O-Ring	Buna-N
4	O-Ring	Buna-N
5	O-Ring	Buna-N
6	O-Ring	Buna-N
7	Thrust Washer	AMPCO 45
8	Seat Retainer	Nitronic 50 HS
9	Belleville Washer Backup	316 CW SS
10	Locking Piece	316 SS
11	Locknut	316 SS
12	Stem	316 CW SS
13	Bottom Bearing	AMPCO 45
14	Seat	Carbon Filled Peek
15	Bottom Gland	316 CW SS
16	Body	316 CW SS
17	Packing Gland	316 CW SS
18	Seat Gland	316 CW SS

Typical spare parts found in Repair Kits

Please reference drawing on Page 23

Tel: +45 63 12 83 00 | Email: ps@hymatik.com | www.hymatik.com | Hvidkaervej 27a, DK-5250 Odense SV, Denmark

3/8" 3 Way Subsea Ball Valve Dimensions:

3/8" 3 Way Subsea Ball Valve

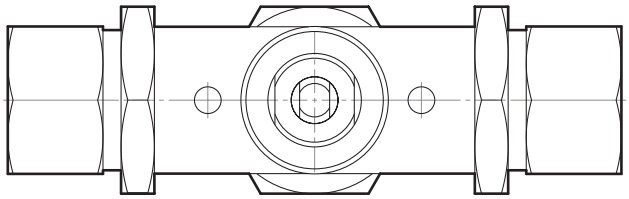

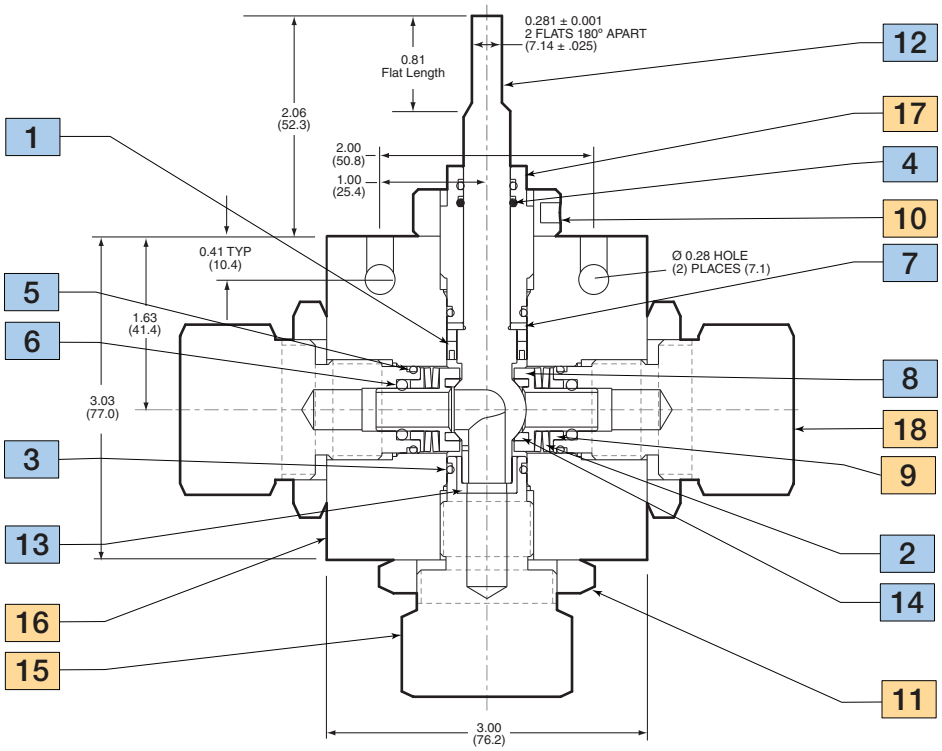

NOTE:
1. MAWP (See Table)
2. Maximum Sea Depth 11,500 FT (3505 meters)
3. Maximum External Pressure 5,000 psi (345 bar)

Dimensions for reference only and subject to change.

NOTE:
Valve Stem has no stop supplied as standard.
Stem will rotate 360° unless used with Subsea Actuator or Handle/Stop is ordered.

Tel: +45 63 12 83 00 | Email: ps@hymatik.com | www.hymatik.com | Hvidkaervej 27a, DK-5250 Odense SV, Denmark

3 Way Subsea Series: 1/2" (12.7mm) Orifice

Pressures to 10,000 psi (690 bar)



Connection Type	MAWP at Room Temperature	Minimum Orifice Inches (mm)	Rated C_V
SF750CX20 (3/4" MP)	10,000 psi (690 bar)	0.500 (12.70)	4.4
SF1000CX20 (1" MP)	10,000 psi (690 bar)	0.500 (12.70)	4.4
3/4" FNPT	10,000 psi (690 bar)	0.500 (12.70)	4.4
1" FNPT	10,000 psi (690 bar)	0.500 (12.70)	4.4

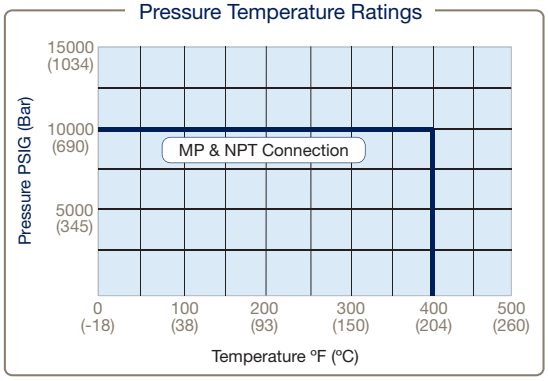

3 Way 1/2" Bore Subsea Ball Valve

Pressure Ratings are determined by the end connections chosen, see chart.
Maximum Temperature rating is determined by the o-ring or PEEK seat material
Note: Side inlet pressure not recommended. Bottom inlet pressure only.
PAE Ball Valves are designed to be used in fully open or fully closed position.
NPT connections are limited to 400°F max due to PTFE Sealant.

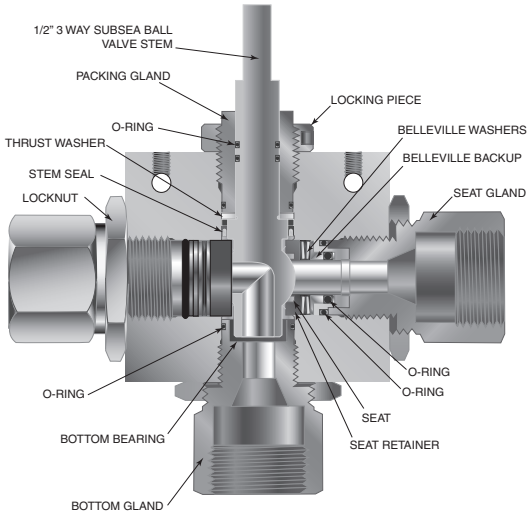

To ensure proper fit use Parker Autoclave tubing

NOTE: Critical gas applications such as Hydrogen or Helium should be evaluated on a case by case basis. Consult factory.
Ball Valves are designed to be operated in fully open or fully closed position

Ball Valve O-ring Options:

V	FKM material: 0° to 400°F (-18° to 204°C)
EPR	Propylene Rubber: -20° to 250°F (-29° to 121°C)

Flow Configuration

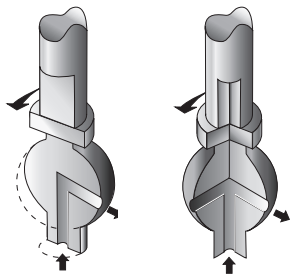

3-Way Switching
180 Turn

3-Way Diverting
90° Turn

See ball valve actuator section for full description, additional information, and options.additional information, and options.

Tel: +45 63 12 83 00 | Email: ps@hymatik.com | www.hymatik.com | Hvidkaervej 27a, DK-5250 Odense SV, Denmark

Ordering Guide:

For complete information on available end connections, see previous page. 3-way ball valves are furnished complete with tube or pipe connections. Standard valve has Buna-N o-rings [250°F (121°C) maximum].

Building a Part Number: *Example: 3B8S10M12*

Example Part Number:	S3B	8	S	10	M12	-	XXX
Ordering Parameters/Options:	Valve Series	Ball Orifice Diameter	Material	Pressure (x 1000 psi)	End Connection		Options
Table Reference: (see below)	A	B	C	D	E		F

A - Valve Series	
S3B	3 Way Subsea Switching Valve (180° Handle Turn)
S3BD	3 Way Subsea Diverter Valve (90° Handle Turn)

B - Ball Orifice Diameter	
8	1/2" (12.7mm)

C - Base Material	
S	UNS S31600/S31603 CW 316 SS (options, contact factory)
IN625	IN625 UNS N06625, Inconel 625

D - Pressure (x 1000 psi)	
10	10,000 psi

E - End Connection			
	Connection	MAWP @ RT	Seat Gland Hex
M12	SF750CX20 (3/4" MP)	10,000 psi	1.75"
M16	SF1000CX20 (1" MP)	10,000 psi	1.75"
P12	3/4" NPT	10,000 psi	1.75"
P16	1" NPT	10,000 psi	1.75"

F - Options	
V	FKM material: 0° to 400°F (-18° to 204°C)
EPR	Ethylene Propylene Rubber: -20° to 250°F (-29° to 121°C)
SOG	NACE Material, Hardness Verification/Certificate
IN625	UNS N06625 Inconel 625 Materials
AP	All Parts (including collar and gland) optional to use with special materials
K	Antivibration Gland Fitting (Cone and Thread Connections only)
H	Handle/Handle Stop

Basic Repair Kits:

When ordering a basic repair kit add an "**R**" prefix before product model codes A, B, and C (see above). Example: **R**S3B8S

When ordering with "F-Options" add an "**R**" prefix before model codes A, B, C and F (see above). Example: **R**S3B8S-EPR

Contact your Parker Autoclave Engineers Sales Representative with any questions.

Diverter Flow Control:

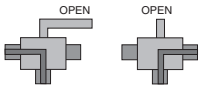

*3-Way Diverter Valve
90° Turn (3BD3 Series)

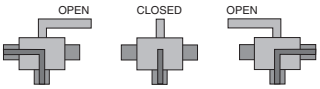

3-Way Switching Valve
180° Turn (3B3 Series)

*The Diverter Valve design permits inlet flow through the bottom port. Outlet flow may be diverted to either valve side port with only a 90° turn.

Material of Construction:

Item #	Description	Material
1	Stem Seal w/ Spring	PTFE w/ Graphite
2	Belleville Washer	302 SS
3	O-Ring	Buna-N
4	O-Ring	Buna-N
5	O-Ring	Buna-N
6	O-Ring	Buna-N
7	Thrust Washer	AMPCO 45
8	Locking Piece	316 SS
9	Locknut	316 SS
10	Seat	Carbon Filled Peek
11	Seat Retainer	Nitronic 50 HC
12	Belleville Washer Backup	316 CW SS
13	Bottom Bearing	AMPCO 45
14	Stem	316 CW SS
15	Packing Gland	316 CW SS
16	Bottom Gland	316 CW SS
17	Body	316 CW SS
18	Seat Gland	316 CW SS

Typical spare parts found in Repair Kits

Please reference drawing on Page 26

1/2" 3 Way Subsea Ball Valve Dimensions:

1/2" 3 Way Subsea Ball Valve

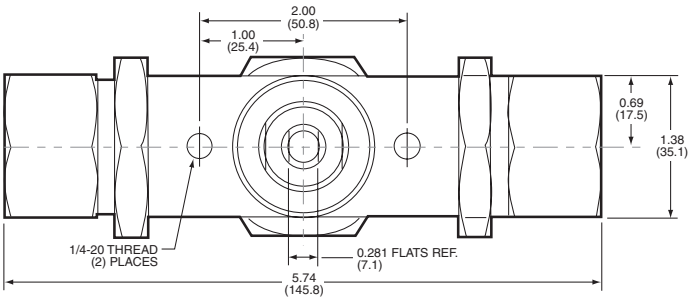

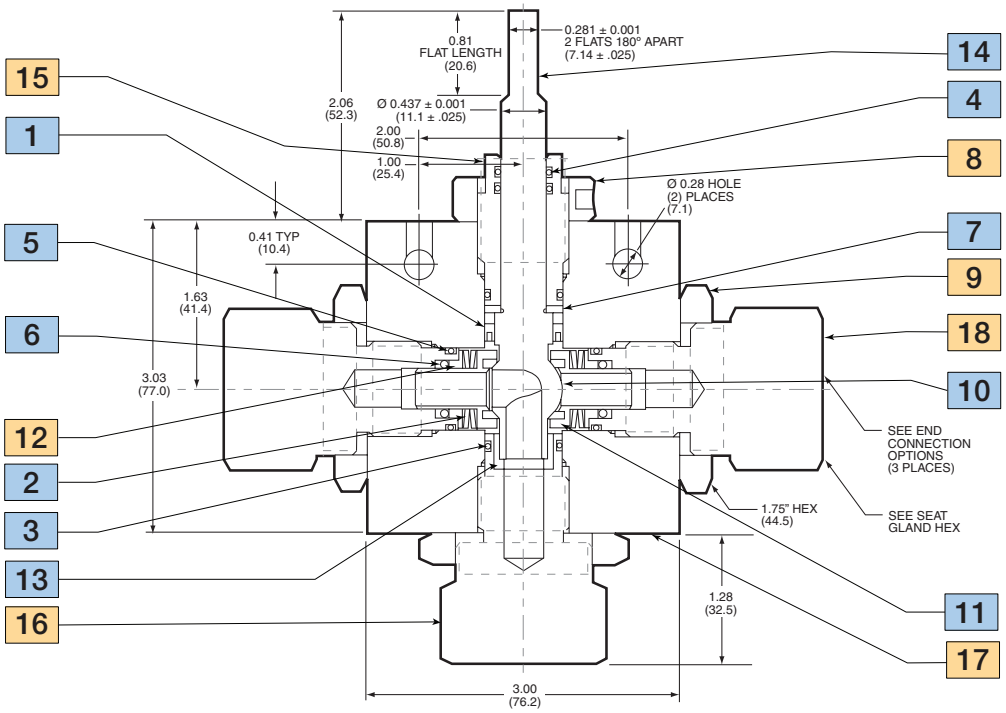

NOTE:
1. MAWP (See Table)
2. Maximum Sea Depth 11,500 FT (3505 meters)
3. Maximum External Pressure 5,000 psi (345 bar)

Dimensions for reference only and subject to change.

NOTE:
Valve Stem has no stop supplied as standard.
Stem will rotate 360° unless used with Subsea Actuator or Handle/Stop is ordered.

Tel: +45 63 12 83 00 | Email: ps@hymatik.com | www.hymatik.com | Hvidkaervej 27a, DK-5250 Odense SV, Denmark

relief valves

Tel: +45 63 12 83 00 | Email: ps@hymatik.com | www.hymatik.com | Hvidkaervej 27a, DK-5250 Odense SV, Denmark

Relief Valves

Medium Pressure, High Pressure, and NPT Inlet Options to 75,000 psi

RVP/PRVP and RVS/PRVS Series



Principle of Operation:

Parker Autoclave Engineers relief valves are designed to open proportionally to increasing pressure. Therefore, they are not recommended for applications requiring immediate full valve flow at set pressure and should not be considered a "Safety Valve". Full flow of relief valve is defined as 110% of set pressure.

RVP Metal Seat Relief Valve:

Series RVP relief valves provide reliable venting of gases or liquids for set pressures from 3,000 psi (205 bar) minimum to 75,000 psi (5170 bar). The standard temperature range for all models is -423° to 400°F (-252° to 204°C). A high temperature option to 750°F (399°C) is also available.

These precision valves are designed for pressure gas systems, cryogenic systems, petrochemical applications and other special systems. Capable of handling air, gases, steam, vapor and liquids, they are however, not recommended for steam boiler applications nor are they ASME code stampable (K-Factors are not available).

RVS Soft Seat Relief Valve:

Series RVS relief valves utilize a PEEK soft seat design for reliable venting of gases at set pressures from 1,500 psi (103 bar) to 20,000 psi (1380 bar). The operating temperature range is -50° to 400°F (-46° to 204°C).

The soft seat design provides bubble tight sealing, repeatable pop-off, and reseat. Additionally, soft seat valves provide a higher cycle life than metal seat relief valves.

These precision valves are designed for gases and liquid systems where zero leakage is critical.
They are not recommended for liquefied gases which produce gas at cryogenic temperatures below -50°F upon relief.

Parker Autoclave Engineers

ENGINEERING YOUR SUCCESS.

Tel: +45 63 12 83 00 | Email: ps@hymatik.com | www.hymatik.com | Hvidkaervej 27a, DK-5250 Odense SV, Denmark

Relief Valves: Pressures to 75,000 psi (5170 bar)

Features and Benefits:

Material:
Standard models of Relief Valves are constructed of UNS S31600, 316 cold worked stainless steel with selected components made of anti-galling stainless steel material for optimum economy and ruggedness.

Connections:
Cone and Thread versions (RVP & RVS Series):
Models 5, 10, and 20RVS Series = SF562C 9/16" Medium Pressure Cone & Thread Connection
Models 5, 10, 15, and 20RVP = SF562C 9/16" Medium Pressure Cone & Thread Connection
Models 30, 45, and 60 RVP = F375C 3/8" High Pressure Cone & Thread Connection
Model 75RVP = F312C150 5/16" Ultra-High Pressure Cone & Thread Connection
NPT Inlet Versions (PRVP & PRVS Series):
Models 5, 10 and 15 PRVS and PRVP Series = 1/2" NPT

The outlet connection on all models is a female 3/4” NPT. While adapters to other sizes and connection types are available, they must be sized for specific flow requirements. Outlet pressure cannot exceed 500 psi (35 bar) in all pressure ranges.

Orifice Sizes:
Orifice diameters range from .062 (1.57mm) to .312" (7.92mm). (See chart on page 5 for list of valve orifice options)

Full Lift for Full Flow:
These relief valves are designed to open as a function of increasing system pressure. Proper spring selection assures repeatability of opening, full lift and flow, and reseat pressures.

Reliability and Long Service Life:
Materials engineering and stringent quality control procedures combine to assure the highest quality, reliability and service life. Each valve is preset and factory sealed to ensure proper valve operation. Note: Mount as far from Pump Outlet as possible to avoid premature relief and extend valve life.

Setpoint Accuracy:
Setpoint Accuracy is ±3%.
Re-Seat Pressure: 85% of set pressure

High Set Pressure Capability:
Unique seat construction plus over-the-nozzle guiding and proper selection of materials permits standard set pressures to 75,000 psi. (5170 bar).

Dependable Shut-Off:
Series RVP/PRVP relief valves are designed to provide shut-off of liquids and gases under pressure to commercial tightness standards. Series RVS/PRVS relief valves are designed to provide bubble tight shut off of gases and liquids.

Fewer Parts, Ease of Maintenance:
Engineered to perform with fewer basic components, both RVP/PRVP and RVS/PRVS valves facilitate minimum stocking of spare parts and ease of maintenance. The combined angle seat in the RVP/PRVP series eliminates the need for lapping in rework.

Special Requirements:
Most models available with CE Mark/PED Approval (PRVP and PRVS are exception) to Category IV.
SOG (NACE MR0175) option available upon request.

Tel: +45 63 12 83 00 | Email: ps@hymatik.com | www.hymatik.com | Hvidkaervej 27a, DK-5250 Odense SV, Denmark

Relief Valves: Pressures to 75,000 psi (5170 bar)

Options:

Parker Autoclave Engineers can supply various options on special order. A high temperature option is also available for temperatures to 750°F (399°C) for RVP or PRVP models. To specify high temperature option: Add suffix "**HT**" for 750°F (399°C) high temperature option.

Note: Pressure rating for elevated temperature based on derating curves. (See Technical Brochure).

Caution:

1. AE relief valves are preset and factory sealed. Warranty is voided if seal is broken by customer.
2. Maximum system operating pressure should not exceed 90% of relief valve set pressure. **Operating pressures in excess may cause weepage resulting in damage to the plug and seat.**
3. Relief Valves are not to be used as Pressure regulators, RVP has limited actuation life dependent on pressure.

Ordering Instructions:

To permit prompt and correct responses to your order, we will require the following information: quantity, valve catalog number, service requirements (liquid, gas & vapor), set pressure (PSIG - bar), and service temperature range.

Gas Flow Curves (SCFM of Nitrogen)

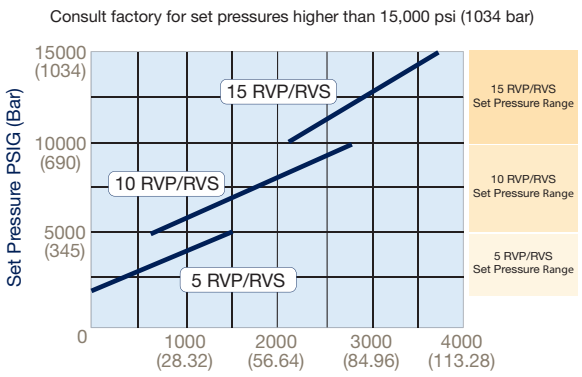

Liquid Flow Curves (Water)

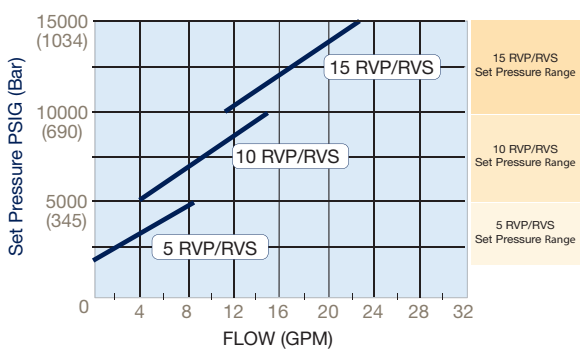

All models are designed primarily for thermal expansion or low volume relief applications at high pressures where flow is not critical.

Note: Curves on this page are based on capacities of valves only and do not take tubing into account.

Caution should be exercised in proper selection of medium pressure tubing based on actual operating conditions. Two series available: 15,000 (1035 bar) and 20,000 (1380 bar).

Tel: +45 63 12 83 00 | Email: ps@hymatik.com | www.hymatik.com | Hvidkaervej 27a, DK-5250 Odense SV, Denmark

Relief Valves: Pressures to 75,000 psi (5170 bar)

Relief Valve Dimensions and Details:

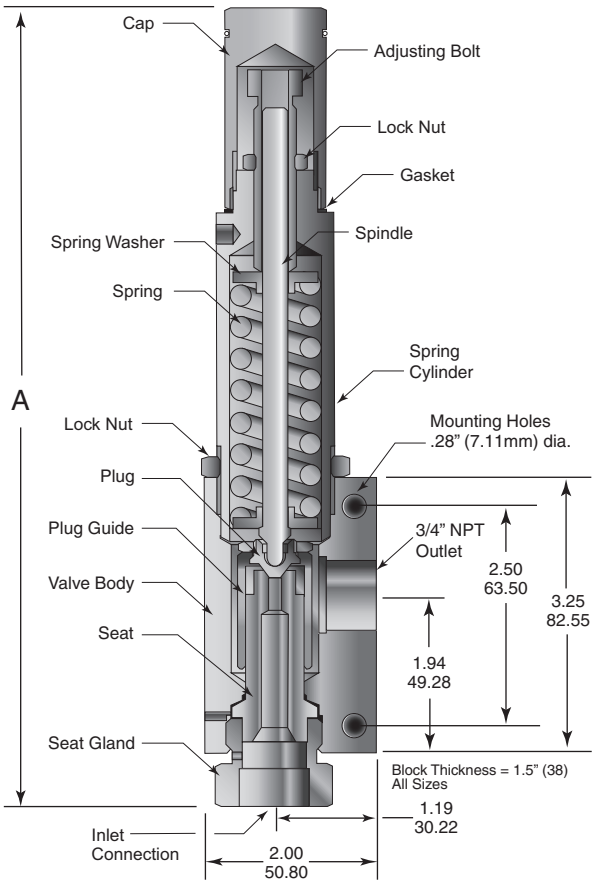

Figure 1
RVP/PRVP Series (Metal Seat)

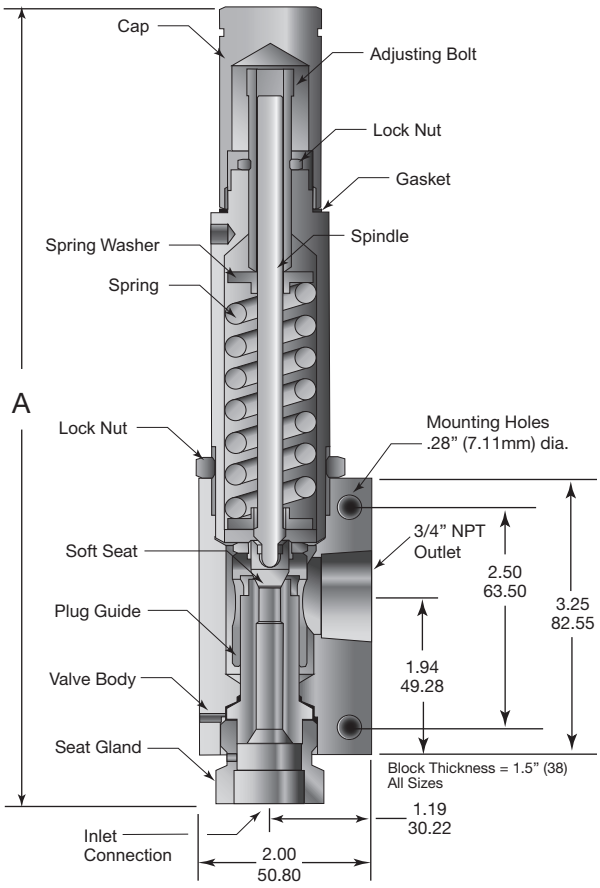

Figure 2
RVS/PRVS Series (Soft Seat)

Note: For "A" dimension please reference the "Ordering and Specifications" table on Page 5.

Tel: +45 63 12 83 00 | Email: ps@hymatik.com | www.hymatik.com | Hvidkaervej 27a, DK-5250 Odense SV, Denmark

Relief Valves: Pressures to 75,000 psi (5170 bar)

Ordering and Specifications:

FIGURE 1: RVP & PRVP Metal Seat Series Relief Valve (PRVP is NPT Inlet version)

Catalog Number*	Connection Size and Type		Orifice Diameter Inches (mm)	Pressure Rating psi (bar) @ 100ºF (38ºC)			Dimension Inches (mm)	Repair Kit[1]
	Inlet Connection	Outlet Connection		Minimum Setting	Maximum Setting	Maximum Back Pressure	"A"	
5PRVP8072	1/2" FNPT	3/4 FNPT	0.312 (7.92)	3,000 (210)	5,000 (345)	500 (35)	10.47 (266)	R5PRVP
10PRVP8072	1/2" FNPT	3/4 FNPT	0.250 (6.35)	5,000 (345)	10,000 (690)	500 (35)	10.47 (266)	R10PRVP
15PRVP8072	1/2" FNPT	3/4 FNPT	0.188 (4.78)	10,000 (690)	15,000 (1035)	500 (35)	10.47 (266)	R15RVP
5RVP9072	SF562CX (9/16" MP)	3/4 FNPT	0.312 (7.92)	3,000 (210)	5,000 (345)	500 (35)	9.40 (238)	R5RVP
10RVP9072	SF562CX (9/16" MP)	3/4 FNPT	0.250 (6.35)	5,000 (345)	10,000 (690)	500 (35)	9.40 (238)	R10RVP
15RVP9072	SF562CX (9/16" MP)	3/4 FNPT	0.188 (4.78)	10,000 (690)	15,000 (1035)	500 (35)	9.40 (238)	R15RVP
20RVP9072	SF562CX (9/16" MP)	3/4 FNPT	0.156 (3.96)	15,000 (1035)	20,000 (1380)	500 (35)	9.40 (238)	R20RVP
30RVP6072	F375C (3/8" HP)	3/4 FNPT	0.125 (3.18)	15,000 (1035)	30,000 (2070)	500 (35)	9.52 (241)	R30RVP
45RVP9072	F562C (9/16" HP)	3/4 FNPT	0.093 (2.36)	25,000 (1725)	45,000 (3100)	500 (35)	9.52 (241)	R45RVP
60RVP6072	F375C (3/8" HP)	3/4 FNPT	0.078 (1.98)	30,000 (2070)	60,000 (4140)	500 (35)	9.52 (241)	R60RVP
75RVP5072	F312C150 (5/16" UHP)	3/4 FNPT	0.062 (1.57)	37,000 (2550)	75,000 (5170)	500 (35)	9.83 (249)	R75RVP

FIGURE 2: RVS & PRVS Soft Seat Series Relief Valve (PRVS is NPT Inlet version)

Catalog Number*	Connection Size and Type		Orifice Diameter Inches (mm)	Pressure Rating psi (bar) @ 100ºF (38ºC)			Dimension Inches (mm)	Repair Kit[1]
	Inlet Connection	Outlet Connection		Minimum Setting	Maximum Setting	Maximum Back Pressure	"A"	
5PRVS8072	1/2" FNPT	3/4 FNPT	0.312 (7.92)	1,500 (103)	5,000 (345)	500 (35)	10.47 (266)	R5PRVS
10PRVS8072	1/2" FNPT	3/4 FNPT	0.250 (6.35)	5,000 (345)	10,000 (690)	500 (35)	10.47 (266)	R10PRVS
15PRVS8072	1/2" FNPT	3/4 FNPT	0.188 (4.78)	10,000 (690)	15,000 (1035)	500 (35)	10.47 (266)	R15PRVS
5RVS9072	SF562CX (9/16" MP)	3/4 FNPT	0.312 (7.92)	1,500 (105)	5,000 (345)	500 (35)	9.40 (238.76)	R5RVS
10RVS9072	SF562CX (9/16" MP)	3/4 FNPT	0.250 (6.35)	5,000 (345)	10,000 (690)	500 (35)	9.40 (238.76)	R10RVS
20RVS9072	SF562CX (9/16" MP)	3/4 FNPT	0.156 (3.96)	10,000 (690)	20,000 (1378)	500 (35)	9.40 (238.76)	R20RVS

* Maximum pressure rating based on the lowest rating of any component. Actual working pressure may be determined by tubing pressure rating, if lower. Note: For pressure rating see selection chart.

[1] Include suffix from original valve for correct options

Suffix	Relief Valve Options (add as suffix to Catalog number listed above)
HT	High Temperature Spring to 750°F (399°C) (RVP or PRVP Series only)
K	Antivibration Gland Fitting (Cone & Thread Connections)
HYG (RVS Only)	Modified for use with Hydrogen/Helium (seat surface and helium seat tested - no material changes)
CE	CE Mark/PED Category IV (not available with PRVP or PRVS models)
SOG	Materials used are NACE Capable & Hardness verified (Maximum pressure reduction possible)
2507	UNS S32750 2507 Super Duplex Wetted Materials
HC	UNS N10276 Hastelloy C-276 Wetted Materials
IN625	UNS N06625 Inconel 625 Wetted Materials

(See "Technical Brochure" for Pressure/Temperature effect on temperatures above ambient.)

Note: use of optional material only changes "wetted parts" to selected material. Items like collars and glands remain CW 316/316L SS. Use -**SOG** (Includes hardness check for NACE) or **-AP** suffix

Tel: +45 63 12 83 00 | Email: ps@hymatik.com | www.hymatik.com | Hvidkaervej 27a, DK-5250 Odense SV, Denmark

Relief Valves: Pressures to 75,000 psi (5170 bar)

Cone and Thread Version: RVP Series

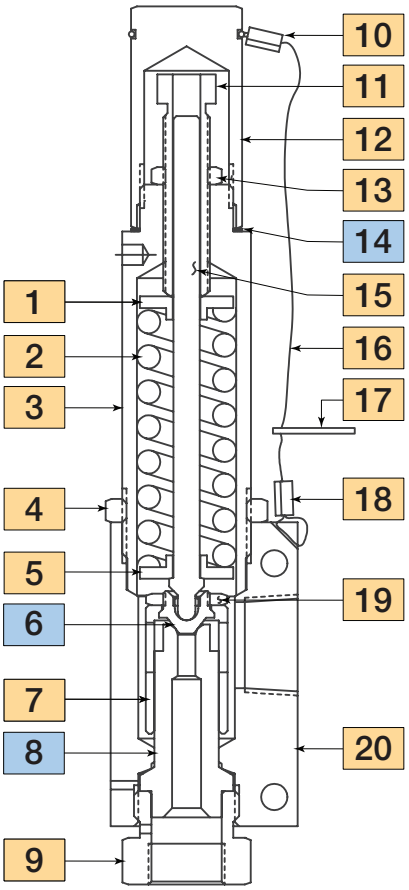

Material of Construction:

Item #	Description	Material
1	Spring Washer	316 SS
2	Spring	316 SS
3	Spring Cylinder	316 SS
4	Lock Nut	316 SS
5	Spring Washer	316 SS
6	Plug	316 SS
7	Plug Guide	Nitronic 60
8	Seat	316 SS
9	Seat Gland	316 SS
10	Splicing Sleeve	-
11	Adjusting Bolt	Nitronic 60
12	Cap	316 SS
13	Lock Nut	316 SS
14	Gasket	302/304 Annealed
15	Spindle	316 SS
16	Cable, 1/16" Dia.	300 Series SS
17	Nameplate	300 Series SS
18	Splicing Sleeve	-
19	Lock Nut	316 SS
20	Valve Body	316 SS

Typical spare parts found in Repair Kits listed on page 5

Tel: +45 63 12 83 00 | Email: ps@hymatik.com | www.hymatik.com | Hvidkaervej 27a, DK-5250 Odense SV, Denmark

Relief Valves: Pressures to 75,000 psi (5170 bar)

Cone and Thread Version: RVS Series

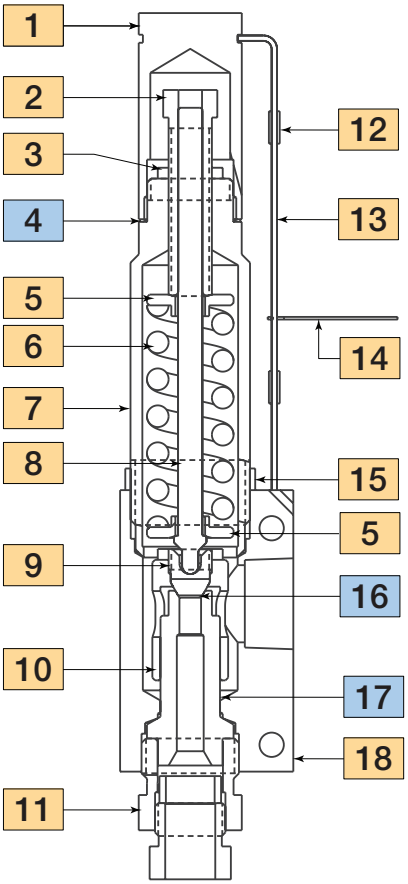

Material of Construction:

Item #	Description	Material
1	Cap	300 Series SS
2	Adjusting Bolt	Nitronic 60
3	Lock Nut	316 SS
4	Gasket	304 SS Annealed
5	Spring Washer	316 SS
6	Spring	316 SS
7	Spring Cylinder	316 SS
8	Spindle	316 SS
9	Plug Gland	316 SS
10	Plug Guide	Nitronic 60
11	Seat Gland	316 SS
12	Splicing Sleeve	316 SS
13	Cable	316 SS
14	Nameplate	304 SS
15	Lock Nut	316 SS
16	Soft Seal	Arlon 1260
17	Seat	316 SS
18	Body	316 SS

Typical spare parts found in Repair Kits listed on page 5

Relief Valves: Pressures to 75,000 psi (5170 bar)

NPT Version: PRVP Series

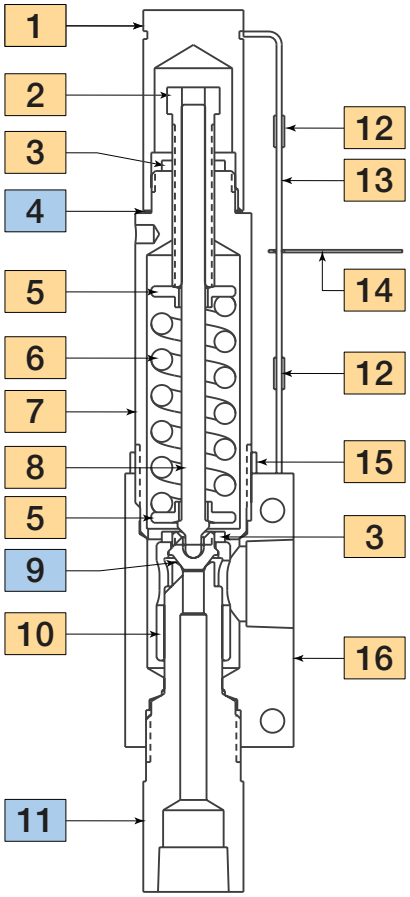

Material of Construction:

Item #	Description	Material
1	Cap	316 SS
2	Adjusting Bolt	Nitronic 60
3	Lock Nut	316 SS
4	Gasket	304 SS Annealed
5	Spring Washer	316 SS
6	Spring	316 SS
7	Spring Cylinder	316 SS
8	Spindle	316 SS
9	Plug	316 SS
10	Plug Guide	Nitronic 60
11	Seat Gland	316 SS
12	Splicing Sleeve	316 SS
13	Cable	316 SS
14	Nameplate	304 SS
15	Lock Nut	316 SS
16	Valve Body	316 SS

Typical spare parts found in Repair Kits listed on page 5.

Tel: +45 63 12 83 00 | Email: ps@hymatik.com | www.hymatik.com | Hvidkaervej 27a, DK-5250 Odense SV, Denmark

Relief Valves: Pressures to 75,000 psi (5170 bar)

NPT Version: PRVS Series

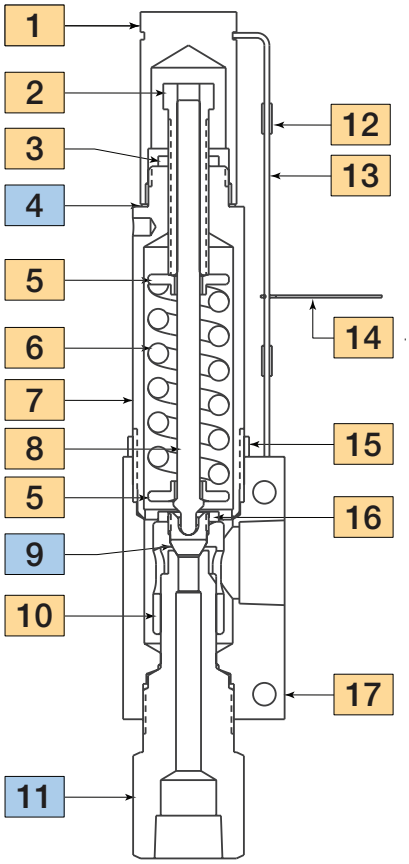

Material of Construction:

Item #	Description	Material
1	Cap	316 SS
2	Adjusting Bolt	Nitronic 60
3	Lock Nut	316 SS
4	Gasket	304 SS Annealed
5	Spring Washer	316 SS
6	Spring	316 SS
7	Spring Cylinder	316 SS
8	Spindle	316 SS
9	Soft Seat	Arlon 1263
10	Plug Guide	Nitronic 60
11	Seat	316 SS
12	Splicing Sleeve	316 SS
13	Cable	316 SS
14	Nameplate	304 SS
15	Lock Nut	316 SS
16	Lock Nut	316 SS
17	Body	316 SS

Typical spare parts found in Repair Kits listed on page 5.

Tel: +45 63 12 83 00 | Email: ps@hymatik.com | www.hymatik.com | Hvidkaervej 27a, DK-5250 Odense SV, Denmark

accessories

Accessories

Safety Head/Rupture Discs
Pressure Gauges/Snubbers
Thermocouples



Accessories Components:

Parker Autoclave Engineers offers a complete selection of accessories to complete your system requirements.

Thermocouples and **Thermowells** are used for monitoring and controlling temperatures in systems with operating pressures up to 60,000 psi (4140 bar).

Safety Head/Rupture Disc assemblies are used to protect systems and pressure vessels from over-pressure conditions. Rupture discs are available in various pressure ranges and material options suitable for the application.

Pressure Gauges are used to monitor and control pressure. P-Style pressure gauges are available in two sizes, 4-1/2" and 6" (114.3 mm and 152.4 mm), and ranges to 80,000 psi (5515 bar). Optional electrical contact faces for pressure control are used to set high and low limits. Gauges are standard panel mount or can be flush mounted with an optional flush mount kit. H-Style stainless steel case gauges with K-Monel bourdon tube are also offered for corrosive applications up to 30,000 psi (2070 bar)

Gauge/Instrument Snubbers provide superior pressure gauge protection without compromising instrument accuracy. Available with male and female Medium and High Pressure Cone and Thread connections in 1/4" and 3/8" sizes.

ENGINEERING YOUR SUCCESS.

Pencil Type Thermocouples

Accessories - Pressures to 15,000 psi (1035 bar)

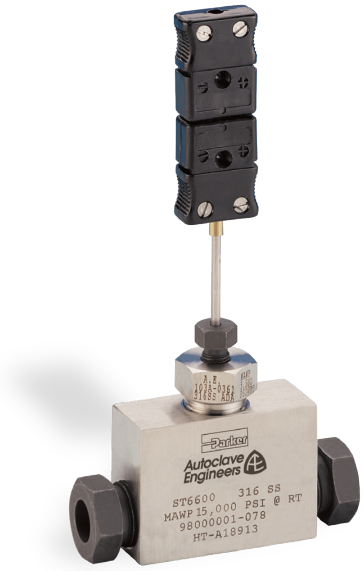

Overview:

Thermocouples provide reliable temperature measurement within a system. The design permits installation of the element in direct contact with the fluid stream, thereby providing reliable temperature measurement. The quick-connector affords system flexibility. The thermocouple tip has a grounded-type junction.

Materials:

Precision-molded plastic connectors have heavy duty, spring-loaded jack inserts for positive contact. The sheath is type 316 stainless steel with 316 SS ferrule and gland. We offer a choice of iron constantan (J) or chromel-alumel (K) type elements (please specify when ordering). Basic assembly includes 1/8" Parker Autoclave Engineers Speedbite connection with adapters for other connection sizes.

Pressure/Temperature Ratings:

Ratings to 15,000 psi (1035 bar) maximum working pressure. Temperature rating based on connection style. Low pressure Speedbite connection not recommended below -100°F (-73°C) or above 650°F (343°C).

*Degraded Accuracy below 0°F when using K-Type Thermocouples in Cryogenic applications.

Ordering Information:

Catalog order numbers in the table refer to the complete assembly. Add suffix "**J**" for iron constantan element or "**K**" for chromel-alumel. To order a basic thermocouple with plug/jack assembly and connection adapter but **WITHOUT** Through or Angle-Style Tee change last digit in order number to "0" and specify sheath length if different from standard 3.62" (91.94 mm) length, maximum 24 inches.

Ordering examples: TP4400K 6" (152.4 mm) denotes basic thermocouple to fit into a 1/4" Parker Autoclave Engineers SpeedBite connection with chromel-alumel element and 6" (152.4 mm) sheath. TP 4401K denotes the above unit complete with through-type Tee assembly and standard 3.62" (91.94 mm) sheath.

Thermocouple Specification Table

Calibration Type	Type of Thermocouples	Temperature Range	Comments
J	Iron (+) Constantan (-)	32 to 1400ºF (0 to 760ºC)	Reducing atmoshphere recommended. Iron leg subject to oxidation to elevated temperatures.
K	Chromel (+) Alumel (-)	-328 to 2300ºF (-200 to 1260ºC)	Well suited for oxidizing atmosphere. Most commonly used calibration type. *Degraded Accuracy below 0°F when using K-Type Thermocouples in Cryogenic applications.

Tel: +45 63 12 83 00 | Email: ps@hymatik.com | www.hymatik.com | Hvidkaervej 27a, DK-5250 Odense SV, Denmark

Through-Type

Catalog Number	Connection Type	Pressure Rating PSI (Bar)	Tubing Size inches (mm)	Dimensions - inches (mm)						Block Thickness
				A	B	C	D Typical	E	H	
TP2201*	W125 (1/8" LP)	15,000 (1035)	1/8 (3.18)	1.38 (35.05)	0.69 (17.53)	0.31 (7.87)	3.62 (91.95)	1.00 (25.40)	7.18 (182.37)	0.50 (12.70)
TP4401	SW250 (1/4" LP)	15,000 (1035)	1/4 (6.35)	1.75 (44.45)	0.88 (22.35)	0.44 (11.18)	3.62 (91.95)	1.19 (30.23)	7.25 (184.15)	0.62 (15.75)
TP6601	SW375 (3/8" LP)	15,000 (1035)	3/8 (9.52	2.00 (50.80)	1.00 (25.400)	0.53 (13.46)	3.62 (91.95	1.38 (35.05)	7.31 (185.67)	0.75 (19.05)
TP8801	SW500 (1/2" LP)	10,000 (690)	1/2 (12.70)	2.50 (63.50)	1.25 (31.75)	0.53 (13.46)	3.62 (91.95	1.75 (44.45)	7.44 (188.98)	1.00 (25.40)

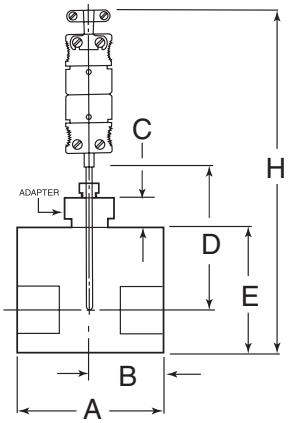

Note: All thermocouples are furnished complete with connection components unless otherwise specified.
*Adapter not required. Tee is included in standard catalog number.

Maximum pressure rating is based on the lowest rating of any component. Actual working pressure may be determined by tubing pressure rating, if lower. Increased temperatures reduce mechanical strength.

Parker Autoclave Engineers stocks select products.

All dimensions for reference only and subject to change. For prompt service, Consult your local representative.

Low Pressure Speedbite Tee matching connection size selected is included with catalog number ending in "1". (ie; TP8801J)

Angle-Type

Catalog Number	Connection Type	Pressure Rating PSI (Bar)	Tubing Size inches (mm)	Dimensions - inches (mm)						Block Thickness
				A	B	C	D Typical	E	H	
TP2202*	W125 (1/8" LP)	15,000 (1035)	1/8 (3.18)	1.00 (25.40)	0.75 (19.05)	0.31 (7.87)	3.62 (91.95)	1.38 (35.05)	7.62 (193.55)	0.50 (12.70)
TP4402	SW250 (1/4" LP)	15,000 (1035)	1/4 (6.35)	1.19 (30.23)	0.88 (22.35)	0.44 (11.18)	3.62 (91.95)	1.75 (44.45)	7.81 (198.37)	0.62 (15.75)
TP6602	SW375 (3/8" LP)	15,000 (1035)	3/8 (9.52	1.38 (35.05)	1.00 (25.400)	0.53 (13.46)	3.62 (91.95	2.00 (50.80)	7.94 (201.68)	0.75 (19.05)
TP8802	SW500 (1/2" LP)	10,000 (690)	1/2 (12.70)	1.75 (44.45)	1.25 (31.75)	0.53 (13.46)	3.62 (91.95	2.50 (63.50)	8.19 (208.03)	1.00 (25.40)

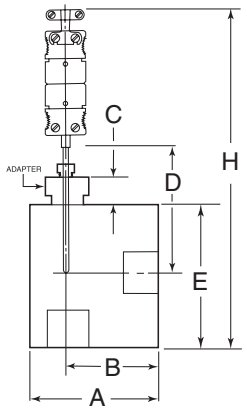

Note: All thermocouples are furnished complete with connection components unless otherwise specified.
*Adapter not required. Tee is included in standard catalog number.

Maximum pressure rating is based on the lowest rating of any component. Actual working pressure may be determined by tubing pressure rating, if lower. Increased temperatures reduce mechanical strength.

Parker Autoclave Engineers stocks select products.

All dimensions for reference only and subject to change. For prompt service, Consult your local representative.

Low Pressure Speedbite Tee used in Angle configuration, matching connection size selected, is included with catalog number ending in "2". (ie; TP8802J)

Tel: +45 63 12 83 00 | Email: ps@hymatik.com | www.hymatik.com | Hvidkaervej 27a, DK-5250 Odense SV, Denmark

Sheath Type Thermocouples

Accessories - Pressures to 60,000 psi (4140 bar)



Overview:

Thermocouples provide reliable temperature measurement within a system. Similar to low pressure thermocouples, this design also permits direct temperature monitoring at any point in a fluid system. The sheath type thermocouple features grounded junction and rapid response - 100 milliseconds or less at 63.3% of a step change.

Materials:

Bodies are 15-5PH stainless steel. 316 SS sheath brazed into body with gold-nickel alloy brazing material. An aluminum terminal housing is threaded into the body for ready access to terminals. An o-ring seal provides moisture protection.

Sheath Length:

Differs for each size connection for optimum tip contact with fluid stream. Sheath diameter is 1/16".

Temperature Ratings:

Rating to 2,000°F (1093°C) at tip of thermocouple. (Refer to adjacent Pressure/Temperature chart for elevated temperatures.) Minimum operating temperature at the tip of the thermocouple: Type J = 0°F (-18°C), Type K = -328°F (200°C). *Degraded Accuracy below 0°F when using K-Type Thermocouples in Cryogenic applications.

Maximum operating temperature for 15-5PH Body is 0° to 1000°F (-18° to 538°C)
Maximum operating temperature for 316 SS body is -328° to 1200°F (-200° to 650°C)

Ordering Information:

To order thermocouples for use in standard Parker Autoclave Engineers tees or crosses, use order numbers listed in table (**fittings not included as standard**). For custom length sheaths, to extend through a vessel wall or cover, calculate sheath length from the detail drawings (Fig 1 & 2) on the following page:

1. Add vessel wall or cover thickness to the distance the sheath will extend into vessel.
2. When using a basic 1/4" Parker Autoclave connection, subtract dimension "**M**" for proper sheath length to order.
3. For all other connection sizes, add dimension "**N**" to measurement obtained in step 1.
4. Order a custom length sheath by adding desired length in inches as suffix to order number, maximum 24 inches.

Standard collar and gland are cold worked 316 SS. When cold worked 316 SS collar and gland are used, the physical properties are permanently altered after use above 800°F (430°C). See Technical Brochure for full description.

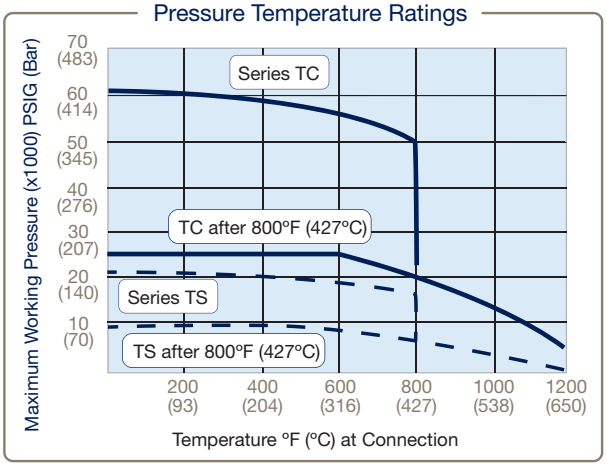

Tel: +45 63 12 83 00 | Email: ps@hymatik.com | www.hymatik.com | Hvidkaervej 27a, DK-5250 Odense SV, Denmark

Series TS Medium Pressure to 20,000 psi (1380)

Catalog Number	Fits Connection Type	Tubing Size inches (mm)	Element Type	Dimensions - inches (mm)				Fitting Pattern
				L	M	N	H	
TSJ4	SF250CX (1/4" MP)	1/4 (3.18)	iron constantan	0.28 (7.11)	0.50 (12.70)		5.78 (146.81)	Figure 1
TSK4			chromel-alumel					
TSJ6	SF375CX (3/8" MP)	3/8 (9.52)	iron constantan	1.19 (30.23)		0.19 (4.83)	6.67 (166.88)	Figure 2 (See Note)
TSK6			chromel-alumel					
TSJ9	SF562CX (9/16" MP)	9/16 (14.28)	iron constantan	1.19 (30.23)		0.13 (3.30)	6.50 (135.10)	
TSK9			chromel-alumel					
TSJ12	SF750CX (3/4" MP)	3/4 (19.05)	iron constantan	2.00 (50.80)		0.50 (12.70)	6.88 (174.75)	
TSK12			chromel-alumel					
TSJ16	SF1000CX (1" MP)	1 (25.4)	iron constantan	2.62 (66.55)		0.57 (14.48)	6.94 (176.28)	
TSK16			chromel-alumel					
TSJ24	SF1500CX (1-1/2" MP)	1-1/2 (38.10)	iron constantan	3.25 (82.55)		.688 (17.48)	7.06 (179.38)	
TSK24			chromel-alumel					

Series TC High Pressure to 60,000 psi (4140)

TCJ4	F250C (1/4" HP)	1/4 (3.18)	iron constantan	0.38 (9.65)	0.50 (12.70)		5.88 (149.351)	Figure 1
TCK4			chromel-alumel					
TCJ6	F375C (3/8" HP)	3/8 (9.52)	iron constantan	1.38 (35.05)		0.32 (8.13)	6.69 (169.23)	Figure 2 (See Note)
TCK6			chromel-alumel					
TCJ9	F562C (9/16" HP)	9/16 (14.28)	iron constantan	1.62 (41.15)		0.25 (6.35)	6.627 (168.15)	
TCK9			chromel-alumel					

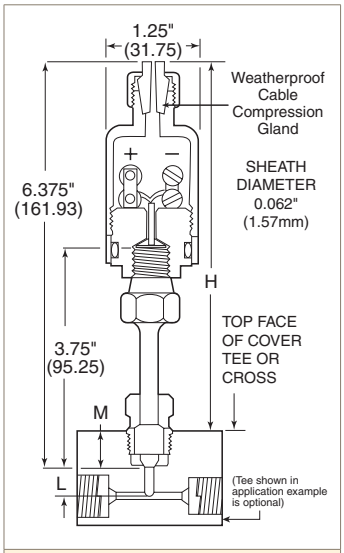

FIGURE 1

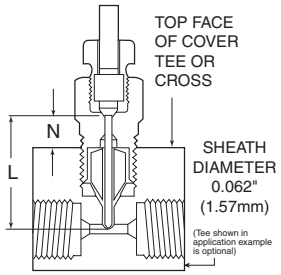

FIGURE 2

Note: All thermocouples are furnished complete with 1/4" Medium or High Pressure connection adapter to match tubing size selected. Union Tee or Cross sold separately.

TSJ24 and TSK24 do not extend past the wall of the bore.

*Maximum pressure rating is based on the lowest rating of any component.

Actual working pressure may be determined by tubing pressure rating, if lower. All dimensions for reference only and subject to change.

For prompt service, Parker Autoclave Engineers stocks select products. Consult your local representative.

Tel: +45 63 12 83 00 | Email: ps@hymatik.com | www.hymatik.com | Hvidkaervej 27a, DK-5250 Odense SV, Denmark

Thermowells

Accessories - Pressures to 20,000 psi (1379 bar)

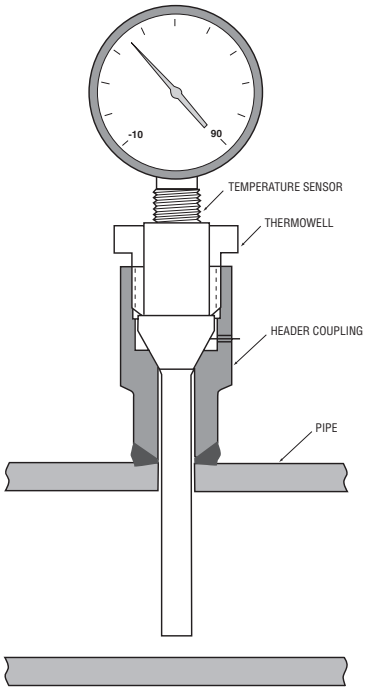

Typical Thermowell Assembly

Overview:

Thermowells are used to provide isolation between a temperature sensor and the environment, such as liquid or gas. Thermowells protect the sensor from pressure, corrosion, abrasion or vibration caused by the process medium. Thermowells allow the temperature sensor to be removed and replaced without compromising either the ambient region or the process.

Parker Autoclave Engineers manufactures thermowells from solid bar stock to accommodate applications in the petrochemical, chemical, refining, power and other process industries.

Parker Autoclave Engineers manufactures 316SS thermowells capable of connecting to a 1" (SF1000CX) Parker Autoclave Engineers female medium pressure connection.

Materials:

Care must be taken in determining the material used for the thermowell as well as other factors. Parker Autoclave Engineers offers design assistance that includes pressure, temperature and vibration effect of the fluids. This vibration can cause well stem failure.

Standard and special thermowell materials available:

- 316 Stainless Steel
- Hastelloy
- Inconel
- Connection gland included

To order Parker Autoclave Engineers thermowell assemblies, please refer to our order guide on next page to assist in determining your needs.

Contact your local representative or the factory for technical assistance and application suggestions.

Tel: +45 63 12 83 00 | Email: ps@hymatik.com | www.hymatik.com | Hvidkaervej 27a, DK-5250 Odense SV, Denmark

Ordering Information:

Catalog Number	Dimension "A" inches (mm)	Pressure Rating psi (bar)
TW02.75	2.75 (70.68)	20,000 (1379)
TW03.12	3.12 (79.25)	20,000 (1379)
TW03.86	3.86 (98.04)	20,000 (1379)
TW04.25	4.25 (107.95)	20,000 (1379)
TW04.50	4.50 (114.30)	20,000 (1379)
TW05.50	5.50 (139.70)	20,000 (1379)
TW05.75	5.75 (146.05)	20,000 (1379)
TW06.25	6.25 (158.75)	20,000 (1379)
TW07.00	7.00 (177.80)	20,000 (1379)
TW07.50	7.50 (190.50)	20,000 (1379)
TW010.00	10.00 (254.00)	20,000 (1379)
TW012.00	12.00 (304.80)	20,000 (1379)

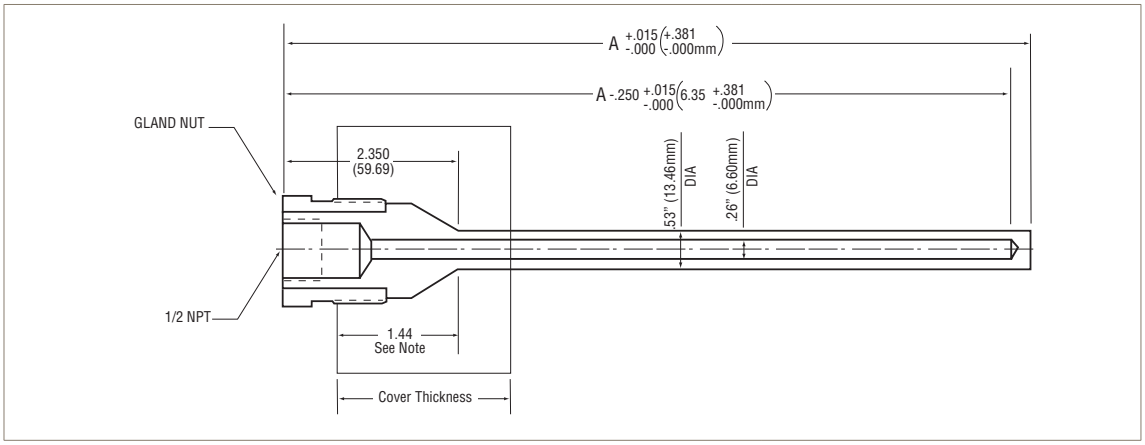

Note: Thermowells fit Autoclave's 1" medium pressure connection. (SF1000-CX). 1" connection insertion length is 1.44" (36.76).

Tel: +45 63 12 83 00 | Email: ps@hymatik.com | www.hymatik.com | Hvidkaervej 27a, DK-5250 Odense SV, Denmark

Universal Safety Heads

Accessories - Pressures to 100,000 psi (6900 bar)



Safety Heads/Rupture Discs:

Safety Heads and Rupture Discs offer an economical and dependable relief port to guard against system over-pressure.

Parker Autoclave Engineers offers universal safety heads in three series compatible in orifice size and maximum pressure rating with Parker Autoclave Low Pressure, Medium Pressure and High Pressure valves, fittings and tubing.

Parker Autoclave Engineers Low Pressure Series SS: Parker Autoclave SpeedBite Single Ferrule compression tube connection, maximum rupture disc pressures to 15,000 psi (1035 bar).

Parker Autoclave Engineers Medium Pressure Series CSX: Parker Autoclave Medium-Pressure coned-and-threaded tube connection, maximum rupture disc pressures to 20,000 psi (1380 bar).

Parker Autoclave Engineers High Pressure Series CS: Parker Autoclave High Pressure coned-and-threaded tube connection, maximum rupture pressure to 100,000 psi (6900 bar).

The 3/16F style features a 3/16" blow-out diameter and a **FLAT** seat which can be ordered in pressure range from 2000 to 27,000 psi (138 to 1862 bar).

The 1/4A style features a 1/4" blow-out diameter and an **ANGULAR** seat which can be ordered in pressures from 1000 to 75,000 psi (69 to 5170 bar).

The 1/2F style features a 1/2" blow-out diameter and a **FLAT** seat which can be ordered in pressures from 500 to 10,000psi (35 to 690 bar).

Material and Features:

- Non-rotating double-cone plug design avoids galling and scoring of safety head or connection during installation. Reduces likelihood of leakage.
- Interchangeable hold-down rings permit use of several different sizes and types of rupture discs in a single safety head. Accommodates discs with rupture pressures as low as 1000 psi (69 bar) and ranging to 75,000 psi (5170 bar) and above.
- Installs in any standard Parker Autoclave Engineers coupling, elbow, cross or tee.
- Cold-worked Type 316 SS body hold down gland and plug, all series.
- Hold down rings are Corrosion resistant stainless steel.

ASME Safety Head Option is no longer available due to a change in code April 2016 that makes it impractical to manufacture.

CE Marked Version available. Use suffix -CE when requesting quote.

Tel: +45 63 12 83 00 | Email: ps@hymatik.com | www.hymatik.com | Hvidkaervej 27a, DK-5250 Odense SV, Denmark

Ordering Information:

To order an Parker Autoclave Engineers Universal Safety Head, use the catalog order number from table. ADD THE SIZE OF THE RUPTURE DISC YOU WANT AS A SUFFIX TO THE CATALOG NUMBER; SUCH AS CS6600-**1/4A**.

Then order desired rupture discs from rupture disc section. (This is important since the disc size determines which hold-down ring will be furnished with the safety head.) Please note: Plug is included.

Hold-Down Nut Torque Values				
Torque @ Minimum Pressure		Torque @ Maximum Pressure		Rupture Disc Size Inches
Ft. lb. (N.m)	psi (bar)	Ft. lb. (N.m)	psi (bar)	
20 (27.1)	5000 (345)	90 (122)	26,500 (1827)	3/16 Flat†
40 (54.2)	4000 (276)	90 (122)	10,000 (690)	1/2 Flat
20 (27.1)	4000 (276)	140 (189.8)	60,000 (4137)	1/4 Angle

† 3/16 flat seat disc cannot be used with safety head assemblies SS6600, SS8600, 40CS9600 and CSX9600. Torque values for intermediate pressures may be linearily interpolated. Use minimum torque value for pressures lower than those shown.

Hold-Down Nut Torque Requirements vs. Rupture Disc Pressure Rating @ RT

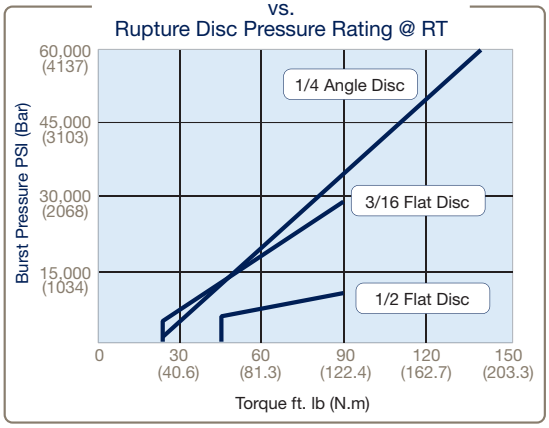

1/4 Angle Disc (shown in Safety Head assembly drawing below)

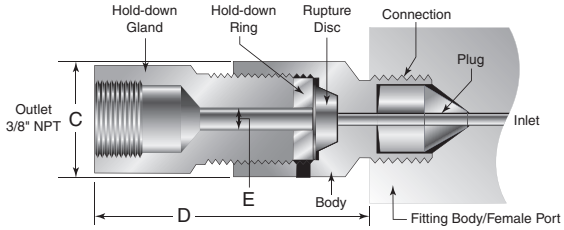

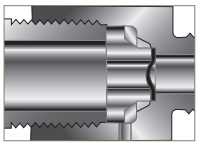

3/16 Flat Rupture Disc

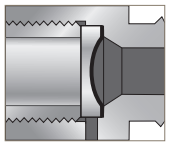

1/2 Flat Rupture Disc

Catalog Number (without Disc)	Plug Part Number	Hold-Down Gland	Fits Connection Type	Fitting Pressure Rating psi (bar)	Body Torque Ft. lb. (N.m)	Plug Orifice inches (mm)	Body Orifice inches (mm)	Rupture Disc Size - inches (mm)			Dimensions Inches (mm)	
								3/16F Port E*	1/4A Port E*	1/2F Port E*	C	D
Low Pressure												
SS2600	101A-0434	3/16, 1/2 Flat 1/4 Angle	W125 (1/8" LP)	15,000 (1034)	15 (20.3)	0.094 (2.39)	0.125 (3.15)	0.188 (4.78)	0.25 (6.35)	0.50 (12.7)	1.00 (25.4)	2.13 (53.96)
SS4600	102A-0434		SW250 (1/4" LP)	15,000 (1034)	15 (20.3)	0.125 (3.18)	0.250 (6.35)	0.188 (4.78)	0.25 (6.35)	0.50 (12.7)	1.00 (25.4)	2.13 (53.96)
SS6600	103A-0434		SW375 (3/8" LP)	15,000 (1034)	15 (20.3)	0.250 (6.35)	0.375 (9.53)	NA	0.25 (6.35)	0.50 (12.7)	1.00 (25.4)	2.13 (53.96)
SS8600	104A-0434		SW500 (1/2" LP)	10,000 (690)	20 (22.1)	0.375 (9.53)	0.375 (9.53)	NA	0.25 (6.35)	0.50 (12.7)	1.00 (25.4)	2.13 (53.96)

Port E* - Minimum disc blow-out diameter of hold down ring

Maximum pressure rating is based on the lowest rating of any component. Actual working pressure may be determined by tubing pressure rating, if lower. All dimensions for reference only and subject to change. For prompt service, Parker Autoclave Engineers stocks select products. Consult your local representative.

Tel: +45 63 12 83 00 | Email: ps@hymatik.com | www.hymatik.com | Hvidkaervej 27a, DK-5250 Odense SV, Denmark

Universal Safety Heads

Accessories - Pressures to 100,000 psi (6900 bar)

1/4 Angle Disc Safety Head Illustration

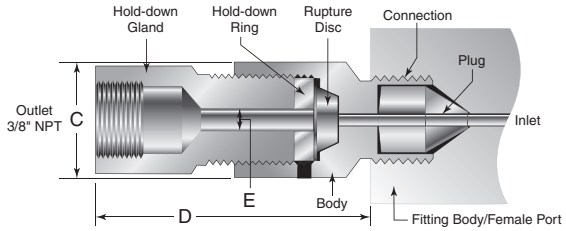

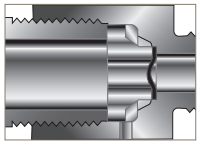

3/16 Flat Rupture Disc

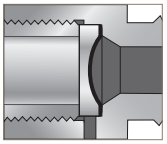

1/2 Flat Rupture Disc

Catalog Number (without Disc)	Plug Part Number	Hold-Down Gland	Fits Connection Type	Pressure Rating psi (bar)	Body Torque Ft. lb. (N.m)	Plug Orifice inches (mm)	Body Orifice inches (mm)	Rupture Disc Size - inches (mm)			Dimensions Inches (mm)	
								3/16F Port E*	1/4A Port E*	1/2F Port E*	C	D
Medium Pressure												
CSX4600	2010-7823	3/16, 1/2 Flat 1/4 Angle	SF250CX (1/4" MP)	20,000 (1379)	15 (20.3)	0.094 (2.39)	0.141 (3.585)	0.188 (4.78)	0.25 (6.35)	0.50 (12.7)	1.00 (25.4)	2.19 (55.63)
CSX6600	2010-7844		SF375CX (3/8" MP)	20,000 (1379)	20 (27.1)	0.171 (4.34)	0.250 (6.35)	0.188 (4.78)	0.25 (6.35)	0.50 (12.7)	1.00 (25.4)	2.19 (55.63)
CSX9600	102A-0438		SF562CX (9/16" MP)	20,000 (1379)	30 (40.6)	0.312 (7.92)	0.375 (9.53)	NA	0.25 (6.35)	0.50 (12.7)	1.00 (25.4)	2.19 (55.63)
High Pressure												
CS4600	1030-4877	3/16, 1/2 Flat 1/4 Angle	F250C (1/4" HP)	60,000 (4140)	20 (27.1)	0.082 (2.08)	0.125 (3.18)	0.188 (4.78)	0.25 (6.35)	0.50 (12.7)	1.00 (25.4)	2.25 (57.15)
CS6600	1030-6096		F375C (3/8" HP)	60,000 (4140)	40 (54.2)	0.125 (3.18)	0.219 (5.56)	0.188 (4.78)	0.25 (6.35)	0.50 (12.7)	1.00 (25.4)	2.25 (57.15)
CS9600	1030-6097		F562C (9/16" HP)	60,000 (4140)	80 (108.5)	0.188 (4.78)	0.281 (7.13)	0.188 (4.78)	0.25 (6.35)	0.50 (12.7)	1.19 (30.23)	2.25 (57.15)
40CS9600	101C-7192		F562C40 (9/16" 40K)	40,000 (2758)	80 (108.5)	0.250 (6.35)	0.281 (7.13)	NA	0.25 (6.35)	0.50 (12.7)	1.19 (30.23)	2.25 (57.15)
100CS58B8	101F-3358	1/4 Angle	F312C150 (5/16" UHP)	100,000 (6900)	250 (339)	0.093 (2.36)	0.093 (2.36)	NA	0.25 (6.35)	NA	2.25 (57.15)	4.13 (104.90)
Pipe (NPT)												
PS4600		1/4 Angle	1/4" NPT	15,000 (1035)			0.188 (4.78)	0.188 (4.78)	0.25 (6.35)	0.50 (12.7)	0.81 (20.6)	1.31 (33.3)
PS8600		1/2 Flat	1/2" NPT	15,000 (1035)			0.312 (7.92)	0.188 (4.78)	0.25 (6.35)	0.50 (12.7)	0.81 (20.6)	1.31 (33.3)

Port E* - Minimum disc blow-out diameter of hold down ring

Maximum pressure rating is based on the lowest rating of any component. Actual working pressure may be determined by tubing pressure rating, if lower. All dimensions for reference only and subject to change. For prompt service, Parker Autoclave Engineers stocks select products. Consult your local representative.

Tel: +45 63 12 83 00 | Email: ps@hymatik.com | www.hymatik.com | Hvidkaervej 27a, DK-5250 Odense SV, Denmark

Prebulged Rupture Discs

Pressures to 75,000 psi (5171 bar)

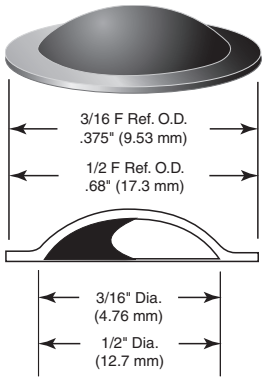

Flat Seat
Rupture Disc

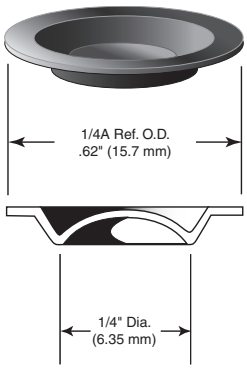

30° Angular
Seat Rupture Disc

Note: Inconel disc normally available from stock.

* CE Marked Rupture Discs can be ordered to PED 2014/68/EU Annex 1, ISO 4126-2

Ordering Information:

Specify quantity, disc size, type, material and temperature.

- Stock Disc(s): Choose part number that corresponds to desired rupture rating which should be at least 110% of operating pressure. The burst rating tolerance is +/- 5% of the furnished tag rating. Discs are rated at 72°F (22°C).
- Special Rupture Disc Order: Special burst pressures can be ordered. The manufacturing tolerance of requested "Burst Pressure" will be +0%/-5%. For example, if a 20,000 psi disc is requested, the burst pressure of the supplied disc can be from 20,000 to 19,000 psi. This disc will have a “Burst Tolerance” of +/-5%. Based on the suppliers tolerances, the resultant disc could burst between 21,000 psi and 18,050 psi. Order number example **RD20000-5-1/4A**
- Minimum order of 6 discs required for all orders.

Disc Material	Disc Size Seat Type	Rupture Pressure Standard available Range ± 5%	Maximum Temperature Rating
	inches	psi (bar)	°F (°C)
Hastelloy C	3/16 Flat	4,400 to 65,000 (303.4 to 4481.5)	1000 (538)
	1/4 Angle	3,300 to 70,000 (227.5 to 4826.3)	1000 (538)
	1/2 Flat	1,000 to 10,000 (68.9 to 690)	1000 (538)
Monel	3/16 Flat	2,650 to 20,000 (182.7 to 1378.9)	800 (427)
	1/4 Angle	2,000 to 40,000 (137.9 to 2757.9)	800 (427)
	1/2 Flat	1,000 to 7,500 (68.5 to 517.1)	800 (427)
Inconel 600 (Standard)	3/16 Flat	200 to 27,000 (138 to 1861)	900 (482)
	1/4 Angle	1000 to 75,000 (69 to 5171)	900 (482)
	1/2 Flat	500 to 10,000 (34.5 to 690)	900 (482)
Type 316 Stainless Steel	3/16 Flat	2,000 to 20,000 (138 to 1380)	900 (482)
	1/4 Angle	1,250 to 60,000 (86.2 to 4136.8)	900 (482)
	1/2 Flat	700 to 10,000 (48.3 to 690)	900 (482)

PTFE coating available on one or both sides to increase minimum rupture rating.

CAUTION: High pressure-to-rupture ratios, severe pressure or temperature cycling, corrosion and metal fatigue affect disc life and rupture pressure. Frequent disc replacement may be desirable to avoid premature rupture.

All dimensions for reference only and subject to change.
For prompt service, Parker Autoclave Engineers stocks select products.
Consult your local representative.

Tel: +45 63 12 83 00 | Email: ps@hymatik.com | www.hymatik.com | Hvidkaervej 27a, DK-5250 Odense SV, Denmark

Rupture Disc Stock Part Listing

Accessories - 3/16 Flat Disc

Part Number	Description	Material	Pressure Range (psi)	Pressure Range (bar)
P-7003	3/16F DISC	Inconel	1908-2120	131-146
P-7674	3/16F DISC	Inconel	2194-2438	151-168
P-7005	3/16F DISC	Inconel	2862-3180	197-219
P-7007	3/16F DISC	Inconel	3148-3498	217-241
P-7009	3/16F DISC	Inconel	3816-4240	263-292
P-7011	3/16F DISC	Inconel	4330-4700	292-324
P-7013	3/16F DISC	Inconel	4770-5300	329-365
P-7015	3/16F DISC	Inconel	5056-5618	348-387
P-7017	3/16F DISC	Inconel	5247-5830	362-402
P-7018	3/16F DISC	Inconel	5533-6148	382-424
P-7019	3/16F DISC	Inconel	5629-6254	388-431
P-7020	3/16F DISC	Inconel	5724-6360	395-439
P-7021	3/16F DISC	Inconel	5915-6572	408-453
P-7022	3/16F DISC	Inconel	6010-6678	414-460
P-7024	3/16F DISC	Inconel	6201-6890	428-475
P-7026	3/16F DISC	Inconel	6678-7420	461-512
P-7028	3/16F DISC	Inconel	7155-7950	493-548
P-7030	3/16F DISC	Inconel	7632-8480	527-585
P-7032	3/16F DISC	Inconel	8109-9010	559-621
P-7034	3/16F DISC	Inconel	8586-9540	592-658
P-7040	3/16F DISC	Inconel	10017-11130	690-767
P-7044	3/16F DISC	Inconel	10971-12190	756-840
P-7046	3/16F DISC	Inconel	11448-12720	789-877
P-7048	3/16F DISC	Inconel	11925-13250	823-914
P-7050	3/16F DISC	Inconel	12402-13780	855-950
P-7052	3/16F DISC	Inconel	12879-14310	888-987
P-7054	3/16F DISC	Inconel	13356-14840	921-1023
P-7056	3/16F DISC	Inconel	13833-15370	954-1060
P-7058	3/16F DISC	Inconel	14310-15900	986-1096
P-7060	3/16F DISC	Inconel	14787-16430	1020-1133
P-7062	3/16F DISC	Inconel	15264-16960	1052-1169
P-7064	3/16F DISC	Inconel	15741-17490	1085-1206
P-7068	3/16F DISC	Inconel	16695-18550	1151-1279
P-7072	3/16F DISC	Inconel	17649-19610	1217-1352
P-7074	3/16F DISC	Inconel	18126-20140	1250-1389
P-7080	3/16F DISC	Inconel	19557-21730	1348-1498
P-7082	3/16F DISC	Inconel	20034-22260	1382-1535
P-7084	3/16F DISC	Inconel	20511-22790	1414-1571
P-7086	3/16F DISC	Inconel	20988-23320	1447-1608
P-7088	3/16F DISC	Inconel	21465-23850	1480-1644
P-7094	3/16F DISC	Inconel	22896-25440	1579-1754
P-7096	3/16F DISC	Inconel	23850-26500	1644-1827
P-7098	3/16F DISC	Inconel	24327-27030	1676-1864

Tel: +45 63 12 83 00 | Email: ps@hymatik.com | www.hymatik.com | Hvidkaervej 27a, DK-5250 Odense SV, Denmark

Rupture Disc Stock Part Listing

Accessories - 1/4 Angle Disc

Part Number	Description	Material	Pressure Range (psi)	Pressure Range (bar)
P-7303	1/4A DISC	Inconel	1145-1272	79-88
P-7305	1/4A DISC	Inconel	1431-1590	99-110
P-7307	1/4A DISC	Inconel	1670-1855	115-128
P-7309	1/4A DISC	Inconel	1908-2120	131-146
P-7311	1/4A DISC	Inconel	2385-2650	165-183
P-7313	1/4A DISC	Inconel	2862-3180	197-219
P-7315	1/4A DISC	Inconel	3339-3710	230-256
P-7317	1/4A DISC	Inconel	3816-4240	263-292
P-7319	1/4A DISC	Inconel	4293-4770	296-365
P-7321	1/4A DISC	Inconel	4773-5300	329-365
P-7323	1/4A DISC	Inconel	5247-5830	362-402
P-7325	1/4A DISC	Inconel	5724-6360	394-438
P-7327	1/4A DISC	Inconel	6201-6890	428-475
P-7329	1/4A DISC	Inconel	6678-7420	461-512
P-7331	1/4A DISC	Inconel	7155-7950	493-548
P-7333	1/4A DISC	Inconel	7632-8480	527-585
P-7335	1/4A DISC	Inconel	8109-9010	559-621
P-7337	1/4A DISC	Inconel	8586-9540	592-658
P-7339	1/4A DISC	Inconel	9063-10070	625-694
P-7341	1/4A DISC	Inconel	9540-10600	658-731
P-7343	1/4A DISC	Inconel	10017-11130	724-804
P-7345	1/4A DISC	Inconel	10494-11660	724-804
P-7347	1/4A DISC	Inconel	10971-12190	757-841
P-7349	1/4A DISC	Inconel	11448-12720	789-877
P-7351	1/4A DISC	Inconel	11925-13250	823-914
P-7353	1/4A DISC	Inconel	12402-13780	855-950
P-7355	1/4A DISC	Inconel	12879-14310	888-987
P-7357	1/4A DISC	Inconel	13356-14840	921-1023
P-7361	1/4A DISC	Inconel	14310-15900	986-1096
P-7363	1/4A DISC	Inconel	14787-16430	1020-1133
P-7365	1/4A DISC	Inconel	15264-16960	1052-1169
P-7367	1/4A DISC	Inconel	15741-17490	1085-1206
P-7369	1/4A DISC	Inconel	16218-18020	1118-1242
P-7371	1/4A DISC	Inconel	16695-18550	1151-1279
P-7373	1/4A DISC	Inconel	17172-19080	1184-1315
P-7375	1/4A DISC	Inconel	17649-19610	1217-1352
P-7377	1/4A DISC	Inconel	18603-20670	1283-1425
P-7379	1/4A DISC	Inconel	19080-21200	1316-1462
P-7381	1/4A DISC	Inconel	19557-21730	1348-1498
P-7382	1/4A DISC	Inconel	19800-22000	1365-1517
P-7383	1/4A DISC	Inconel	21465-23850	1480-1644
P-7385	1/4A DISC	Inconel	23850-26500	1644-1827

Tel: +45 63 12 83 00 | Email: ps@hymatik.com | www.hymatik.com | Hvidkaervej 27a, DK-5250 Odense SV, Denmark

Rupture Disc Stock Part Listing

Accessories - 1/4 Angle Disc - continued

Part Number	Description	Material	Pressure Range (psi)	Pressure Range (bar)
P-7387	1/4A DISC	Inconel	24804-27560	1710-1900
P-7389	1/4A DISC	Inconel	25758-28620	1776-1973
P-7391	1/4A DISC	Inconel	26712-29680	1841-2046
P-7393	1/4A DISC	Inconel	28620-31800	1973-2192
P-7395	1/4A DISC	Inconel	29574-32860	2039-2266
P-7397	1/4A DISC	Inconel	31005-34450	2138-2375
P-7399	1/4A DISC	Inconel	33390-37100	2302-2558
P-7401	1/4A DISC	Inconel	35775-39750	2467-2741
P-7403	1/4A DISC	Inconel	38160-42400	2631-2923
P-7405	1/4A DISC	Inconel	40545-45050	2795-3106
P-7407	1/4A DISC	Inconel	42930-47700	2960-3289
P-7409	1/4A DISC	Inconel	47700-53000	3289-3654
P-7411	1/4A DISC	Inconel	52470-58300	3618-4020
P-7413	1/4A DISC	Inconel	57240-63600	3618-4020
P-7415	1/4A DISC	Inconel	59400-66000	4095-4550
P-7417	1/4A DISC	Inconel	64872-72080	4473-4970
P-7419	1/4A DISC	Inconel	67734-75260	4670-5189

Tel: +45 63 12 83 00 | Email: ps@hymatik.com | www.hymatik.com | Hvidkaervej 27a, DK-5250 Odense SV, Denmark

Rupture Disc Stock Part Listing

Accessories - 1/2 Flat Disc

Part Number	Description	Material	Pressure Range (psi)	Pressure Range (bar)
P-7601	1/2F DISC	Inconel	477-530	33-37
P-7603	1/2F DISC	Inconel	668-742	46-51
P-7605	1/2F DISC	Inconel	716-795	50-55
P-7607	1/2F DISC	Inconel	859-954	66-73
P-7609	1/2F DISC	Inconel	954-1060	68-75
P-7610	1/2F DISC	Inconel	990-1100	68-76
P-7611	1/2F DISC	Inconel	1145-1272	79-88
P-7613	1/2F DISC	Inconel	1191-1323	82-91
P-7615	1/2F DISC	Inconel	1336-1484	92-102
P-7617	1/2F DISC	Inconel	1431-1590	99-110
P-7619	1/2F DISC	Inconel	1526-1696	105-117
P-7621	1/2F DISC	Inconel	1670-1855	115-128
P-7623	1/2F DISC	Inconel	1717-1908	119-132
P-7625	1/2F DISC	Inconel	1908-2120	131-146
P-7627	1/2F DISC	Inconel	2147-2385	148-164
P-7629	1/2F DISC	Inconel	2194-2438	151-168
P-7631	1/2F DISC	Inconel	2385-2650	165-183
P-7633	1/2F DISC	Inconel	2576-2862	177-197
P-7635	1/2F DISC	Inconel	2671-2968	184-204
P-7637	1/2F DISC	Inconel	2862-3180	197-219
P-7639	1/2F DISC	Inconel	3053-3392	211-234
P-7641	1/2F DISC	Inconel	3339-3710	230-256
P-7643	1/2F DISC	Inconel	3530-3922	243-270
P-7645	1/2F DISC	Inconel	3578-3975	247-274
P-7647	1/2F DISC	Inconel	3816-4240	263-292
P-7649	1/2F DISC	Inconel	4293-4770	296-329
P-7651	1/2F DISC	Inconel	4388-4876	302-336
P-7653	1/2F DISC	Inconel	4770-5300	329-365
P-7655	1/2F DISC	Inconel	5247-5830	362-402
P-7657	1/2F DISC	Inconel	5533-6148	382-424
P-7659	1/2F DISC	Inconel	5724-6360	394-438
P-7661	1/2F DISC	Inconel	6201-6890	428-475
P-7663	1/2F DISC	Inconel	6678-7420	461-512
P-7665	1/2F DISC	Inconel	7155-7950	493-548
P-7667	1/2F DISC	Inconel	7632-8480	527-585
P-7669	1/2F DISC	Inconel	8109-9010	559-621
P-7671	1/2F DISC	Inconel	8586-9540	592-658
P-7673	1/2F DISC	Inconel	9540-10600	658-731

Tel: +45 63 12 83 00 | Email: ps@hymatik.com | www.hymatik.com | Hvidkaervej 27a, DK-5250 Odense SV, Denmark

Pressure Gauges

P-Style High Accuracy Gauges to 80,000 psi (5115 bar)



Gauges:

Pressure gauges are offered for use in low, medium and high pressure systems to pressures up to 80,000 psi (5515 bar). Adapters are available.

Material and Features (Low, Medium and High Pressure System Gauges):

- Gauges are Dual Scale, Single Color, PSI and BAR graduations
- ASME Grade 2A, +/-.5% full scale accuracy
- Connection: Female F250C 1/4" High Pressure. **-CG** suffix required to include Collar & Gland
- Acrylic dial cover/solid front aluminum alloy case
- 316 Stainless steel Bourdon tubes**
- Gauges available with bottom entry as standard or back (**-B** suffix) entry connection
- Precision stainless steel movement for accuracy and resistance to atmospheric corrosion
- Pointer zero adjustment located on front of gauge behind dial cover for convenience
- Standard gauges are rated from -20°F to 250°F (-30°C to 121°C) dry, 20°F to 200°C (-7°C to 93°C) Liquid Filled
- NIST Calibration report available on special orders only (-NIST suffix)
- Gauges glycerin filled upon request (**-LF** suffix)

Instrument Quality Gauges:

Flush panel mounting - Panel mounting kits are stocked to permit flush panel mounting of any instrument quality gauge.

To order gauge panel mount kit:

P-8559 4.5" Flush mount
P-8560 6.0" Flush mount

P Style Flush Mounting Ring

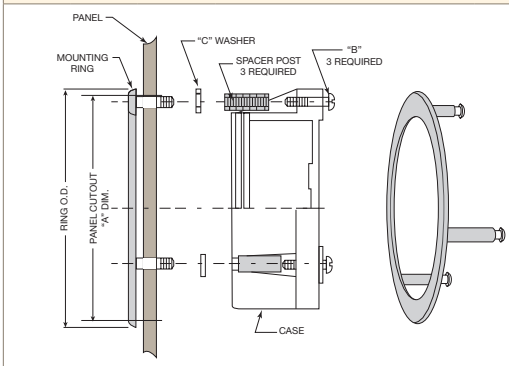

Gauge Size	Ring O.D.	"A" Diameter	"B" Size 3 Screws	"C" Size Washer	Spacer
4-1/2"	6" (152)	5-5/8" (148)	#10-24 x 1-1/8"	7/16 x 17/64 x 5/8"	1"
6"	7-3/4" (197)	7-3/10" (185)	1/4" - 20 x1"	17/64 x 1/2 x 1/16"	1-13/32"

Tel: +45 63 12 83 00 | Email: ps@hymatik.com | www.hymatik.com | Hvidkaervej 27a, DK-5250 Odense SV, Denmark





Note: Gauge connections are female 1/4" (F250C) High Pressure coned-and-threaded connection. Furnished with collar and gland (**-CG** suffix).

Optional electrical contact face - Available for all instrument quality gauges. With adjustable low and high electrical contacts, this option permits gauges to provide pressure control for automatic or remote operation, or for fail-safe set points.

**Bourdon tube material for 0-30,000 psi gauge is K Monel. Bourdon tube material for 0-50,000 psi and 0-80,000 psi gauge is Inconel 718.

P-Style Bottom Connection Gauges			
Catalog Number	Pressure Range psi (bar)	Minor Interval Value psi (bar)	Dial Diameter inches (mm)
P-0481-CG	0-5,000 (0-350)	50 (5)	4-1/2 (114)
P-0482-CG	0-10,000 (0-700)	100 (5)	4-1/2 (114)
P-0483-CG	0-15,000 (0-1000)	100 (10)	4-1/2 (114)
P-0487-CG	0-20,000 (0-1400)	200 (20)	4-1/2 (114)
P-0488-CG**	0-30,000 (0-2000)	250 (20)	6 (152)
P-0489-CG**	0-50,000 (0-3500)	500 (20)	6 (152)
P-0490-CG**	0-80,000 (0-5500)	1,000 (50)	6 (152)

P-Style Back Connection Gauges			
P-0482B-CG	0-10,000 (0-700)	100 (5)	4-1/2 (114)
P-0483B-CG	0-15,000 (0-1000)	100 (10)	4-1/2 (114)
P-0487B-CG	0-20,000 (0-1400)	200 (20)	4-1/2 (114)
P-0488B-CG**	0-30,000 (0-2000)	200 (20)	6 (152)
P-0489B-CG**	0-50,000 (0-3500)	500 (25)	6 (152)

Optional Electrical Contact Face	
Catalog Number	Fits Gauge Dial Diameter inches (mm)
P-0713	4-1/2 (114)
P-0714	6 (152)

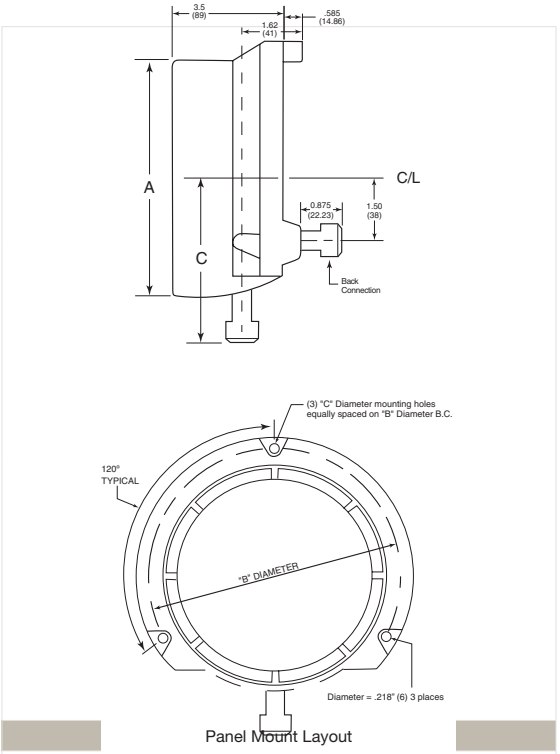

Panel Mount Layout

Gauge Size inches (mm)	"A" Cutout inches (mm)	"B" inches (mm)	"C" inches (mm)
4-1/2 (114)	4-7/8 (124)	5-3/8 (137)	3-15/16 (100)
6 (152)	6-5/8 (162)	7 (178)	4-1/2 (114)

Tel: +45 63 12 83 00 | Email: ps@hymatik.com | www.hymatik.com | Hvidkaervej 27a, DK-5250 Odense SV, Denmark

Pressure Gauges

H-Style Sour Service Stainless Steel Gauges - Pressures to 30,000 psi (2068 bar)

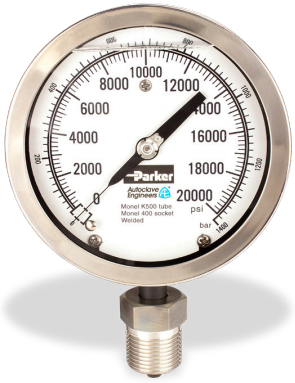

Overview:

Parker Autoclave Engineers H Series Pressure Gauges are suitable for use where ambient corrosion is a major concern and are NACE MR01-75 2002 compliant.. Its stainless steel case and ring offer good appearance and excellent resistance to chemical, weather and corrosion attack. The bourdon tube is made from K-Monel providing durability and performance when used with aggressive process media.

These gauges are available dry or liquid filled (**-LF** suffix).

Factory Calibrated			
Catalog Number	Pressure psi (bar)	Minor Interval Value psi (bar)	Dial Diameter Inches (mm)
H-0380	0-5000 (350)	50 (5)	4-1/2 (114)
H-0336	0-10,000 (700)	100 (5)	4-1/2 (114)
H-0071	0-15,000 (1000)	100 (10)	4-1/2 (114)
H-0304	0-20,000 (1400)	200 (20)	4-1/2 (114)
H-0360	0-30,000 (2000)	250 (20)	4-1/2 (114)

* Glycerine is standard liquid filled for “LF” option

Material and Features:

- Gauges are Dual Scale, Single Color, PSI and BAR graduations.
- ASME Grade 1A, +/-1% of span accuracy
- Temperature Range (Process), -20°F to 250ºF (-29°C to 121°C) - Dry, 20°F to 150°F (-7°C to 93°C) - Liquid Filled (Glycerin)
- 304 stainless steel case and ring, glass window
- K-Monel Bourdon tube and socket
- Connection: Male M562C 9/16" High Pressure Cone & Thread (API Type III)All gauges furnished with SOG 316 SS collar and gland as standard
- Precision Teflon® -coated, 400 stainless steel movement for accuracy and resistance to atmospheric corrosion.
- Pointer zero adjustment located on front of gauge behind dial cover for convenience.
- Gauges can be liquid filled (Add **- LF** to Catalog number)*
- Gauges are NACE MR0175-2002 compliant
- NIST Calibration reports available on special orders only (-NIST suffix)

Tel: +45 63 12 83 00 | Email: ps@hymatik.com | www.hymatik.com | Hvidkaervej 27a, DK-5250 Odense SV, Denmark

H-Style Dimensions

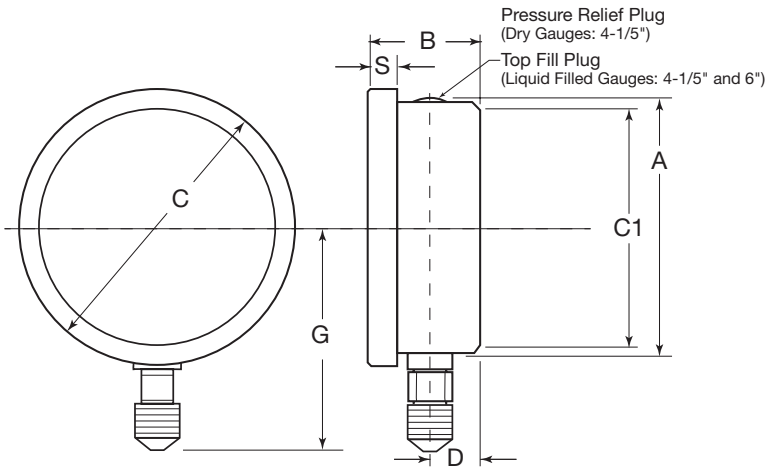

Gauge Size	A	B	C	C1	D	G	S	Weight	
								Dry	LF
4-1/2" (100)	4-23/32 (120)	2-1/16" (52)	5-3/32" (129)	6-1/4" (159)	15/16" (24)	3-15/16" (100)	15/32" (12)	1.75# .79kg	2.40# 1.1kg
6" (160)	6-5/16" (160)	2" (51)	6-21/32" (169)	7-41/64" (194)	27/32" (22)	4-13/16" (122)	13/32" (10)	2.25# 1kg	4.12# 1.85kg

Tel: +45 63 12 83 00 | Email: ps@hymatik.com | www.hymatik.com | Hvidkaervej 27a, DK-5250 Odense SV, Denmark

Gauge/Instrument Snubber

Accessories - Pressures to 100,000 psi (6895 bar)



Overview:

Parker Autoclave Engineers Pressure Snubbers provide protection to gauges and instrumentation from pressure surges, pulsation and shock. The unique snubber design provides superior instrument protection while not compromising instrument accuracy or reaction time. This is accomplished by the use of existing technology from our excess flow check valve with additional design features.

When sudden flow is experienced, the poppet will rise, blocking the pressure surge and a small bleed hole in the poppet will allow pressure to slowly equalize. When the pressure is equalized, the poppet will then drop allowing normal flow to the gauge. A 5 micron filter is used to prevent the hole in the plug from becoming plugged. **The snubber must be mounted in the vertical position as indicated on the unit.**

Snubbers are offered in CW316SS as standard, with either male, female or male/female connections in 1/4" and 3/8" sizes. Optional materials available upon request.

Standard O-ring is FKM rated 400ºF (204ºC) maximum.

Ordering Guide:

For complete information on available gauge snubber types and additional options, contact your Sales Representative.

Building a Part Number: *Example: SNBFH4FH4*

Example Part Number:	SNB	F	H4	F	H4	–	155*
Ordering Parameters/Options:	Gauge Snubber	Inlet Connection Type	Inlet Connection Size	Outlet Connection Type	Outlet Connection Size		Material*
Table Reference: (see below)	A	B	C	D	E		F

A - Gauge Snubber	
SNB	Gauge Snubber
100SNB	100,00 psi (6895) Gauge Snubber*

B - Inlet Connection Type	
M	Male
F	Female

C - Inlet Connection Size	
M4	1/4" Medium Pressure Connection - SF250CX
M6	3/8" Medium Pressure Connection - SF375CX
H4	1/4" High Pressure Connection - F250C
H6	3/8" High Pressure Connection - F375C
U4	1/4" Ultra High Pressure Connection - F250C100 (100SNB only)
U6	3/8" Ultra High Pressure Connection - F375C100 (100SNB only)

D - Outlet Connection Type	
M	Male
F	Female

E - Outlet Connection Size	
M4	1/4" Medium Pressure Connection - SF250CX
M6	3/8" Medium Pressure Connection - SF375CX
H4	1/4" High Pressure Connection - F250C (F250C100*)
H6	3/8" High Pressure Connection - F375C (F375C100*)

F - Material*	
155	15-5PH Stainless Steel (Required for 100SNB)

* Denotes high pressure 100,000 psi (6895 bar) gauge snubber parameter only.

See next page for available models

Tel: +45 63 12 83 00 | Email: ps@hymatik.com | www.hymatik.com | Hvidkaervej 27a, DK-5250 Odense SV, Denmark

Gauge /Instrumentation Snubbers Dimensions

Catalog Number	Pressure Rating psi (bar)*	Connection Types	Dimensions - inches (mm)						
			A	B	C	D Hex	Body (Hex)	Cover Gland (Hex)	Figure Reference
SNBFM4FM4	20,000 (1379)	SF250CX by SF250CX	2.77 (70.36)	2.38 (60.45)	0.38 (9.65)	1/2"	13/16"	13/16"	1
SNBFH4MH4	60,000 (4137)	F250C by M250C	4.05 (102.87)	2.50 (63.50)	0.50 (12.70)	5/8"	1-3/16"	1"	2
SNBMH6MH4	60,000 (4137)	M375C by M250C	3.68 (93.47)	2.13 (54.10)	1.50 (38.10)	3/4"	1-3/16"	1"	3
SNBFH4FH4	60,000 (4137)	F250C by F250C	3.36 (85.34)	2.50 (63.50)	0.50 (12.70)	5/8"	1-3/16"	13/16"	1
FH6FH4	60,000 (4137)	F375 by F250C	3.61 (91.69)	2.75 (69.85)	0.52 (13.21)	5/8"	1-3/16"	13/16"	1
SNBFH6FH6	60,000 (4137)	F375C by F375C	3.81 (96.77)	2.75 (69.85)	0.52 (13.21)	3/4"	1"	1"	1
100SNBFU6FU6-155	100,000 (6895)	F375C100 by F375C100	4.65 (118.11	3.50 (88.90)	0.52 (13.21)	3/4"	1-3/4"	1-3/8"	1

Gauge /Instrumentation Snubber

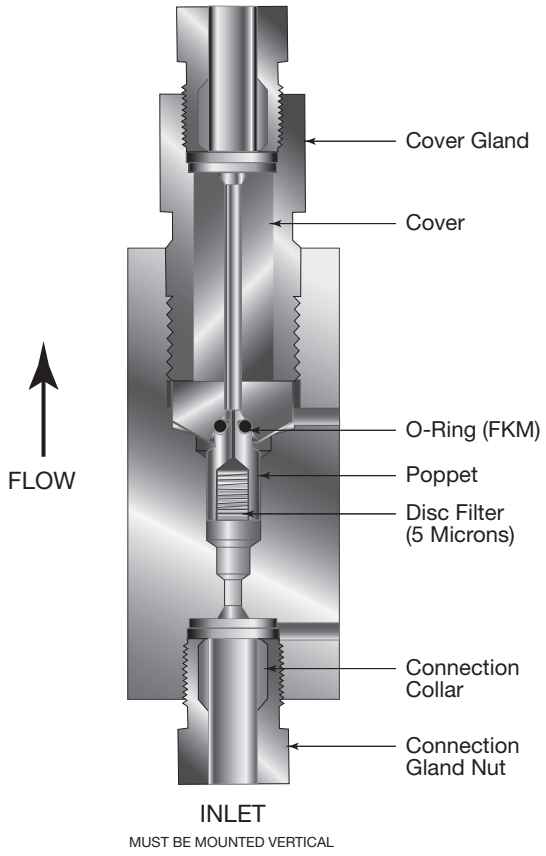

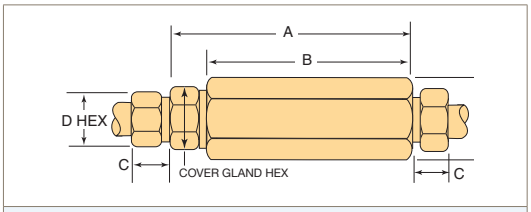

Figure 1

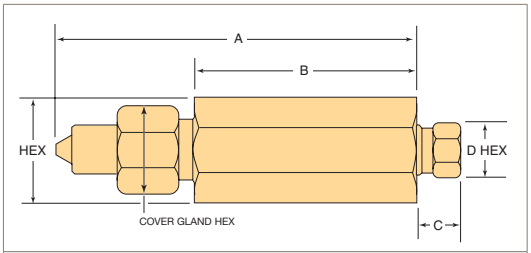

Figure 2

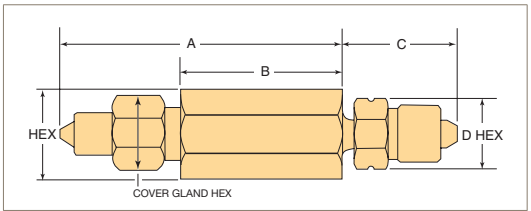

Figure 3

** Across flats. Diameter 2.00

Catalog Number	Cover Torque (ft-lbs)	Poppet O-Ring	Filter
SNBFM4FM4	40	P-1655	P-1028
SNBFH4MH4	110	P-1768	90455
SNBMH6MH4	110	P-1655	P-1749
SNBFH4FH4	110	P-1655	P-1749
FH6FH4	110	P-1768	P-1749
SNBFH6FH6	110	P-1655	90455
100SNBFU6FU6-155	240	N/A	90455

tools, installation operation & maintenance

Tel: +45 63 12 83 00 | Email: ps@hymatik.com | www.hymatik.com | Hvidkaervej 27a, DK-5250 Odense SV, Denmark

Tools, Installation, Operation, Maintenance

Low Pressure “Speedbite”, Cone & Thread:
Manual and Machine, Quick Set (QSS) Tooling



Principle of Operation:

Safe, efficient operation of any product is inherently dependent upon its proper installation. In this section the preparation and assembly of low, medium and high pressure connections is explained. Also covered is the assembly procedure for medium and high pressure Cone & Thread Connections as well as anti-vibration collet gland assemblies.

Correct installation procedures are further promoted by providing dimensional information associated with a variety of Parker Autoclave Engineers tube connections as well as the torque required to properly seat numerous Parker Autoclave Engineers components. Several tools developed by Parker Autoclave Engineers are presented to help accomplish proper valve, fitting and tubing installation and maintenance. Video tutorials are available on our website (www.Autoclave.com) and a Setup & Operational USB Drive is sent with every Cone and Thread Machine.

When installing or maintaining any pressure component, common practice dictates the use of proper safety equipment at all times.

Inside you will find:

- Installation Instructions for Low Pressure "Speedbite" Single Ferrule Bite-Type Compression Fittings
- Part numbers and Installation Instructions for both Medium and High Pressure Manual Cone & Thread Kits and Accessories
- Assembly and Installation Instructions for Anti-Vibration Gland Assemblies
- Part numbers and Specification detail for Cone & Thread Machine (required for all tubing sizes above 9/16")
- Connection Torque Values (for both Standard and Special Materials)
- Connection and Packing Gland Nut Sizes, Torque Wrenches and Crows Foot Wrench Adapters
- Connection Reamer Part Numbers for cleaning up Connection Sealing Surfaces
- Valve Packing, Running and Seating Torque Values
- Male and Female Connection reference drawings with dimensions with connection names
- Manual Make-up and Installation instructions for Quick Set System (QSS) - only 1/4" and 3/8" tube sizes
- Hydraulic Set Up Tool for Quick Set System (HST) - All Sizes
- Part Numbers and Specifications for the Hydraulic Tube Bender (HTB)
- Maintenance and Lubrication site locations for various Parker Autoclave Engineers valves with recommended Lubricants

Parker Autoclave Engineers

ENGINEERING YOUR SUCCESS.

Installation: SpeedBite Connection

Speedbite: Single Ferrule Compression Sealing for Pressures to 15,000 psi (1034 bar)

Parker Autoclave Engineers Low Pressure "Speedbite" connections utilize a "bite-type" single ferrule compression fitting (Fig. 1) that when used with typical annealed instrument tubing (ASTM A269) that does not exceed a hardness of 90 HRB (available from Parker Autoclave) is capable of up to 15,000 psi (1034 bar) MAWP. This "bite" prevents the tubing from ejecting at these higher pressures. Designed to meet the standards of ASME B31.3 Chapter IX this connection picks up where standard single and dual ferrule compression fitting capabilities end. Available in sizes from 1/16" to 1/2" (Note: 1/2" size is restricted to 10,000 psi MAWP). Many different Exotic alloys are available (see product literature).

Installation Instructions:

Determine the length of tubing needed (see Fig. 2 on next page) by measuring the fitting to fitting, face- to-face dimension - adding the extra allowance from Table 1 for proper engagement.

Step 1. Cut tubing to length and deburr. To ensure a good joint, tube must be cut off square using a hacksaw or bandsaw (suggest at least 32 teeth per inch minimum) and sawing vice or guide. Deburr external edge with a flat file and the ID of the tube with either the Parker AE deburr tool (p/n 90257) or even the Cone & Thread Reamer tools shown on page 21.



Step 2. Lubricate male threads. (Lubrication not necessary if tube nut has Bonded Dry-Film Lubricant.) Slip gland and sleeve onto tubing.

Note: Be sure to remove gland and sleeve from components and slide them onto the tubing before inserting the tubing into the components. **Make sure larger end of sleeve is toward gland.** Push tubing into valve or fitting until it bottoms out.
Note: A small amount of process tolerable inert grease on the nose of the compression sleeve will improve sealing process.



Step 3. Turn gland until “finger-tight”, THEN, TIGHTEN GLAND UNTIL SLEEVE BEGINS TO GRIP TUBING by using wrench, turning until you feel increased resistance. This is what we call “Wrench-Tight”. (this differs from standard compression fitting installation)

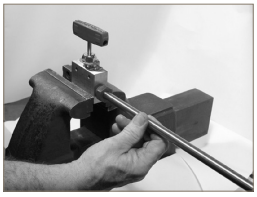

Step 4. From this “Wrench Tight” position, note starting position of wrench. Tighten gland approximately 1-1/4 turns for the SW and 1/16" & 1/8" W connections. When installing Male Adapter (preformed ferrule tip) fitting, - only 1/8 turn is necessary.

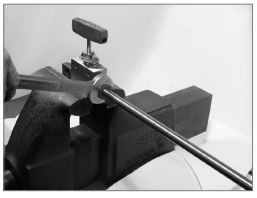

Tel: +45 63 12 83 00 | Email: ps@hymatik.com | www.hymatik.com | Hvidkaervej 27a, DK-5250 Odense SV, Denmark

Installation: SpeedBite Connection

Complete Connection

The illustration below (Fig. 1) shows the condition of sleeve and tubing after completion of “sleeve seating.” The sleeve has cut into the tubing (bite-type) as it moved forward into the tapered seat, upsetting material ahead of it and establishing a shoulder on the tubing to provide positive mechanical support for the tubing end-load. A properly seated sleeve cannot be displaced back and forth along the tubing but may be rotated around the tubing.

Reassembly/Plug Set/Adapter Torque

To reassemble a connection or to set a plug, insert plug or tubing with sleeve and then gland into valve or fitting. Tighten gland “finger-tight”. Tighten gland with a wrench approximately 3/8 of a turn for a gas-tight seal. After frequent reassemblies, it may take less than 3/8 turn to effect a gas-tight seal, and as little as 1/8 of a turn may be sufficient.

Figure 1

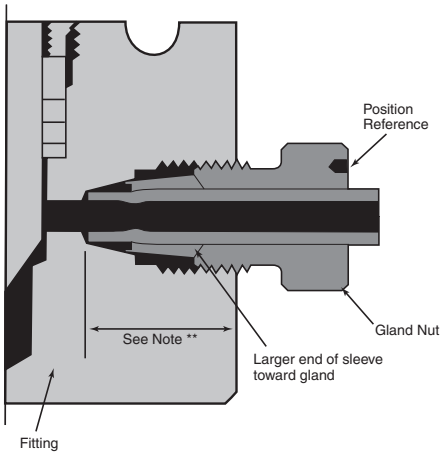

SpeedBite Adapter Sealing Torque	
Connection Type	**Torque (Nm)**
W125	19 in-lbs (2.1)
SW250	71 in-lbs (8.0)
SW375	170 in-lbs (19.21)
SW500	155 in-lbs (17.5)

**Table 1: 10V2/SW Series Engagement Allowance	
Nominal Tube OD inches (mm)	**Insertion Depth to Shoulder** inches (mm)
1/16 (1.59)	0.47 (12)
1/8 (3.18)	0.47 (12)
1/4 (6.35)	0.69 (19)
3/8 (9.53)	0.69 (19)
1/2 (12.70)	0.81 (22)

Note:
* No special torque wrenches or mandrels required.
** Engagement/Insertion Depth; Add this additional length (per tube end) to distance between Fitting-Face & Fitting-Face (see Figure 2 below) Bite into tubing exaggerate for clarity

Figure 2

Determine Tube Length

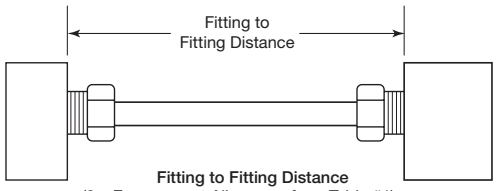

Fitting to Fitting Distance
+ (2 x Engagement Allowance from Table #1)
+ (2 x 1/16” Finish Allowance, Cone & Thread Only - (ignore for Low Pressure Speedbite)

Cut Length

Fully annealed tubing (hardness max of 90 HRB) with proper outside diameter tolerances is recommended for these connection components.

When installing or maintaining any pressure component, common practice dictates the use of proper safety equipment at all times.

Tel: +45 63 12 83 00 | Email: ps@hymatik.com | www.hymatik.com | Hvidkaervej 27a, DK-5250 Odense SV, Denmark

Installation: Coning and Threading Kits



Coning and Threading Kits

Parker Autoclave Engineers manufactures a manual coning and threading tool for optimum performance with tubing sizes up to 9/16” (14.3 mm) outside diameter. These precision quality manual tools permit on-site end preparation for Parker Autoclave Engineers medium and high pressure tubing installations.

Included with all kits:

Coning Tool Assembly:

- Three Collets
- Collet Nut Wrench (p/n 90253)
- Three sets of Coning Blades (1/4" to 9/16")
- 3/32" Coning Blade Allen Wrench (p/n 90256)
- Oil/Chip Reservoir Tube (p/n MCT-RES)
- Support Arm (p/n MCT-SA)
- Four spare Set Screws (p/n 90254)
- De-burring Tool (p/n 90257)
- One quart of Cutting Oil (p/n P-8784)
- Tool Box with Tray (p/n 90255)

Threading Tool parts include:

- 1/8" Die Allen Wrench (p/n P-0285)
- Die Set Screws (p/n P-0281)
- Threading Tool with Handle
- Three Guide Bushings (1/4", 3/8", 9/16")
- Three Threading Dies (1/4", 3/8", 9/16")
- Laminated Instruction Sheet

Parker Autoclave Engineers both Medium and High Pressure coning and threading tool kits. Each kit consists of the required tools and other items necessary for your coning and threading needs. All kit items are placed in a hand-carry tool case with top tray.

Medium Pressure Kit (p/n KMCT-MT)

MCT Coning Tool and:

- 1/4, 3/8 and 9/16" collets
- 1/4, 3/8 and both 9/16" (.312" and .359" ID) Coning Blades

402 Threading Die Holder Tool and:

- 1/4, 3/8 and 9/16" guide bushing
- 1/4, 3/8 and 9/16" dies

Options:
Please note: Each Kit includes Reservoir and Support Arm Assembly as shown on page 5.

High Pressure Kit (p/n KMCT-HT)

MCT Coning Tool and:

- 1/4, 3/8 and 9/16" collets
- 1/4, 3/8 and 9/16" blades
  (9/16” blades for 60,000 psi tubing only)

402 Threading Die Holder Tool and:

- 1/4, 3/8 and 9/16" guide bushing
- 1/4, 3/8 and 9/16" dies

Options:
Please note: Each Kit includes Reservoir and Support Arm Assembly as shown on page 5.

Note:
Additional Coning Blades, Collets, and Threading Dies are available for other sizes of tubing. See manual coning and threading tooling chart, Table 1 on page 5 for sizes and part numbers.

Tel: +45 63 12 83 00 | Email: ps@hymatik.com | www.hymatik.com | Hvidkaervej 27a, DK-5250 Odense SV, Denmark

Installation: Manual Coning and Threading Tools

Interchangeable collets for each size tubing provides proper centering of tubing. The cutting feed arrangement permits the operator to control the length of the cut. Interchangeable tool steel cutting blades are used in pairs to assure more accurate and faster coning. They are designed to square-off and finish the tube end as the cone is completed. There is a provision for applying metal cutting lubricants to the cutting zone.

For coning tool with optional support arm (For holding in vise) and chip/oil catch reservoir, add **RS** to suffix of model number. Example: MCTM4-**RS**

For threading operations the threading die holder is designed to hold the appropriate die for any of the standard Parker Autoclave Engineers tubing sizes through 9/16" (14.3 mm) outside diameter. Interchangeable guide bushings properly guide the tool for accurate thread cutting.





P/N 402: Threading Tool (Threading Dies not included)

MCT Coning Tool

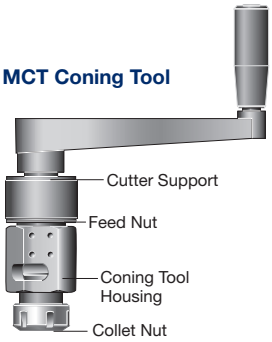

Note: Collet nut wrench (not shown) supplied with coning tool.

Table 1

	Tube Size		Coning Tools and Components Catalog Number			Threading Tools and Components Catalog Number				
	Outside Diameter inches (mm)	Inside Diameter inches (mm)	Tool with Collet and Blades	Collet	Coning Blades (set of 2)	Holder with Die and Bushing	Die Holder	Threading Die Order No.	Threading Die Size-Type*	Bushing Guide
Parker AE Medium Pressure	1/4 (6.35)	.109 (2.77)	MCTM4	90248	CT4BX (old 101F-1577)	402A	402	P-0214	1/4 - 28	1010-0343
	3/8 (9.53)	.203 (5.16)	MCTM6	90250	CT6BX (old 101F-7601)	402C	402	P-0215	3/8 - 24	1010-0344
	9/16 (14.3)	.312 (7.92)	MCTM920	90251	CT9BX (old 1010-5218)	402E	402	P-0216	9/16 - 18	1010-0345
	9/16 (14.3)	.359 (9.12)	MCTM910	90251	CT9BXX (old 101A-1897)	402E	402	P-0216	9/16 - 18	1010-0345
Parker AE High Pressure	1/4 (6.35)	.083 (2.11)	MCTH4	90248	CT4B (old 101F-3939)	402A	402	P-0214	1/4 - 28	1010-0343
	5/16 (7.92)	.062 (1.57)	MCTH5	90249	CT5B (old 101F-3939)	402B	402	P-0205	5/16 - 24	1030-0343
	3/8 (9.53)	.125 (3.18)	MCTH6	90250	CT6B (old 101F-1578)	402C	402	P-0215	3/8 - 24	1010-0344
	9/16 (14.3)	.188 (4.78)	MCTH960	90251	CT9B (old 1010-0883)	402E	402	P-0216	9/16 - 18	1010-0345
	9/16 (14.3)	.250 (6.35)	MCTH940	90251	CT9B40 (old 101C-7214)	402E	402	P-0216	9/16 - 18	1010-0345

Options:

Cutting Oil: **P-8784** (quart)	Reservoir Only: **MCT-RES**
Laminated Instruction Sheet: **90286**	Coning Tool Only (No Blades): **MCT**
Support Arm Only: **MCT-SA**	Coning Tool Only (No Blades) with Reservoir & Support Arm: **MCT-RS**

* All threads for Parker AE medium pressure and high pressure tubing are LH national fine (class 2).

Note: Manual coning and threading tools for 3/4" (19.1 mm) and 1" (25.4 mm) outside diameter tubing are not available. Model AEGCTM-2 Power Coning-and-Threading Machine is recommended for this tubing.

A minimum of 3" (76 mm) straight length is required to perform coning and threading operation with manual coning tool.

Tel: +45 63 12 83 00 | Email: ps@hymatik.com | www.hymatik.com | Hvidkaervej 27a, DK-5250 Odense SV, Denmark

Installation: Manual Coning and Threading Procedure

Manual Kit Procedure

1. Cut tubing to length (see Table 2, Dwg. 1 below) and square off the end using hacksaw with at least 32 teeth per inch or abrasive cut-off wheel. (Fig.1)

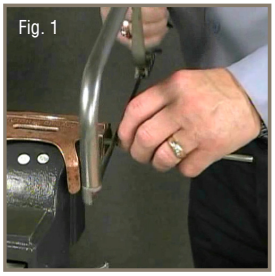

Allow extra length for proper engagement into the connection as listed in Table 2.

Additional 1/16" should be added to each end to compensate for coning/end facing.
Note: When cutting tubing with abrasive cut off wheel, tubing should not be over heated effecting material properties.

TABLE 2: Engagement Allowance

	Connection Tubing Size	Type OD x ID	Engagement Allowance in (mm)
Medium Pressure (to 20,000 psi)	SF250CX	1/4 x .109	.55 (14.0)
	SF375CX	3/8 X .203	.69 (17.6)
	SF562CX10	9/16 x .359	.81 (21)
	SF562CX20	9/16 x .312	.84 (21.3)
	SF750CX10	3/4 x .516	1.00 (25.4)
	SF750CX20	3/4 x .438	1.00 (25.4)
	SF1000CX10	1 x .688	1.38 (35)
	SF1000CX20	1 x .562	1.46 (37)
	SF1500CX	1-1/2 x .937	1.88 (47.6)
High Pressure (to 60,000 psi)	F250C	1/4 x .083	.50 (12.7)
	F375C	3/8 x .125	.69 (17.5)
	F562C	9/16 x .188	.87 (22)
	F562C40	9/16 X .250	.84 (21)
	F1000C43	1 x .438	1.62 (41.1)
Ultra-High Pressure (to 150,000 psi)	F250C100	1/4 x .083	1.18 (30.0)
	F375C100	3/8 x .125	1.10 (28.0)
	F562C100	9/16 x .188	.84 (21.3)
	F312C150	5/16 x .062	1.18 (30.0)

Manual coning and threading tools are not available for any tubing sizes over 9/16" OD, see Coning and Threading Machine section.
All dimensions for reference only and subject to change.

Drawing 1:

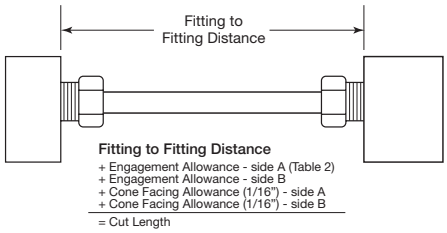

TABLE 3: Tubing Coning

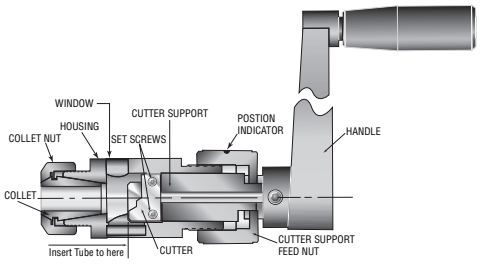

	Tubing O.D. Inches	Cone Length inches (mm)	Number of Turns
Medium Pressure (to 20,000 psi)	1/4"	.11 (2.79)	2
	3/8"	.13 (3.30)	3-1/2
	9/16" (CX-10)	.13 (3.30)	2-1/2
	9/16" (CX-20)	.16 (4.06)	3
High Pressure (to 60,000 psi)	1/4"	.13 (3.30)	3
	3/8"	.16 (4.06)	3
	9/16" (C40)	.28 (7.11)	5-1/2
	9/16"	.21(5.33)	4-1/2
Ultra-High Pressure (to 150,000 psi)	1/4" (C100)	.13 (3.30)	3
	3/8" (C100)	.16 (4.06)	3
	9/16" (C100)	.21 (5.33)	5 1/2
	5/16"	.19 (4.83)	3-1/2

Manual coning and threading tools are not available any tubing sizes over 9/16" OD, see Coning and Threading Machine section.
All dimensions for reference only and subject to change.

2. Install the collet and collet nut into the bottom of the coning tool housing. Remove the cutter support feed nut from the coning tool housing and install the cutters. This can be done by backing out the four set screws in the cutter support.

Note: When installing new blades, be sure the blades are flat against the holder. There should be no space between the blades and the holder.

3. Place the coning tool housing (or optional support arm), without the feed nut/ cutter support assembly, in a vise. The vise should be equipped with soft jaws, and the housing should be placed in the vise to allow lubricant to flow to the cutters and cone.

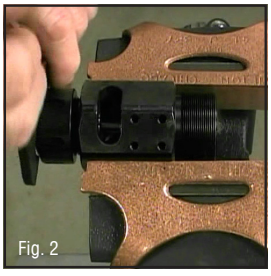

4. Slide the tubing through the collet until the end of the tube appears in the coning tool housing window (see Drawing in Table 3 above). Line the end of the tube with the edge of the window as marked above and tighten the collet nut firmly in place using the collet nut wrench (Fig. 2).

Tel: +45 63 12 83 00 | Email: ps@hymatik.com | www.hymatik.com | Hvidkaervej 27a, DK-5250 Odense SV, Denmark

Installation: Manual Coning and Threading Procedure

5. Install the feed nut/cutter support assembly into the coning tool housing. Rotate the feed nut clockwise until the top of the cutters just contact the top of the tube. **Do not** rotate the feed nut any further at this point.

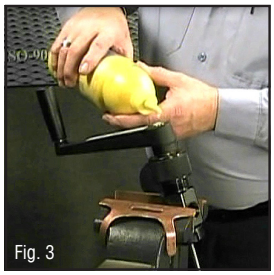
Fig. 3

6. Apply cutting oil through the lubricant opening in the end of the cutter holder or directly through the housing window (Fig. 3). A medium weight high sulphur content cutting fluid is recommended. Use the cutting oil freely during the coning operation.

7a. The distance the feed nut travels from it's start position can be used to gauge the amount of travel to properly cone the tube. The amount of travel is shown in Table 3, pg 6 and is labeled “Cone Length”.

7b. Another method to determine proper cone length is to count the number of turns of the feed nut. The number of turns required is listed in Table 3 under the heading “Number of Turns”. This includes enough advancement of the feed nut to face-off the tube and square the edge that forms the seal surface. The feed nut is supplied with a position indicator (drilled hole) to help determine the number of turns.

8. Rotate the handle in a clockwise direction while simultaneously **slowly turning** the feed nut in a clockwise direction. Rotate the feed nut slowly and evenly to smoothly cone the tube. Loosen collet nut, remove tubing and visually inspect the cone. Use deburring tool to remove any burr on inside edge of tube after coning.

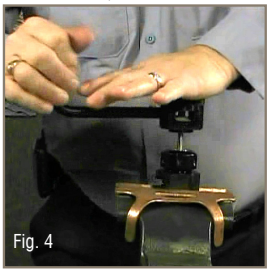
Fig. 4

Manual Threading

9. Using the Coning Tool Body to hold the tubing for threading, clamp in vise, and slide the threading tool over the tube through the guide bushing (Fig. 4).

10. Apply a medium weight, high sulphur cutting oil to threading area

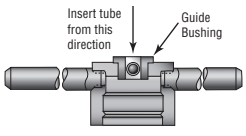

11. Apply pressure to the top of the threading tool to start the cutting action. The threads are left handed, so turn the threader **counterclockwise** to thread the tube.

The threading tool may need to be periodically rotated clockwise to break and discharge metal chips. Apply lubricant freely during the threading process.
Note: The lead in chamfer (larger chamfer) on the die flutes toward guide bushing.

12. Continue to rotate die holder counterclockwise while applying cutting oil generously throughout the process until threads of the following lengths have been cut. See number of turns required in Table 5 (page 8), or length in Table 4 below.

13. After tube is coned, threaded and de burred, check for proper thread fit and length with a new collar of the proper size.
Note: Remember to flush all tubing prior to installation with a fluid that is compatible with the process fluid being used.

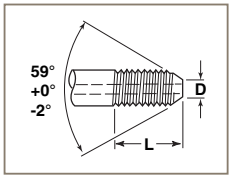

TABLE 4 - Inches (mm)

Male Connection	Tube Size O.D. x I.D.	Dimensions D	Dimensions L (max)	Thread Size and Type *
SM250CX	1/4" x .109 (6.35 x 2.77)	.141 (3.58)	.40 (10.2)	1/4" - 28
SM375CX	3/8" x .203 (9.53 x 5.16)	.25 (6.35)	.46 (11.7)	3/8" - 24
SM562CX20	9/16" x .312 (14.29 x 7.92)	.406 (10.31)	.59 (15.0)	9/16" - 18
SM562CX10	9/16" x .359 (14.29 x 9.12)	.438 (11.13)	.56 (14.2)	9/16" - 18
SM750CX20	3/4" x .438 (19.05 x 11.13)	.562 (14.27)	.69 (17.5)	3/4" - 16
SM750CX10	3/4" x .516 (19.05 x 13.11)	.578 (14.68)	.68 (17.2)	3/4" - 16
SM1000CX20	1" x .562 (25.4 x 14.27)	.719 (18.26)	.92 (23.3)	1" - 14
SM1000CX10	1" x .688 (25.4 x 17.48)	.812 (20.62)	.84 (21.3)	1" - 14
SM1500CX	1-1/2" x .937 (38.10 x 23.78)	1.062 (26.97)	1.09 (27.7)	1-1/2" - 12
M250C	1/4" x .083 (6.35 x 2.10)	.125 (3.18)	.57 (14.5)	1/4" - 28
M375C	3/8" x .125 (9.53 x 3.18)	.219 (5.56)	.77 (19.6)	3/8" - 24
M562C	9/16" x .187 (14.29 x 4.78)	.281 (7.14)	1.01 (25.7)	9/16" - 18
M562C40	9/16" x .250 (14.29 x 6.35)	.312 (7.92)	.98 (24.97)	9/16" - 18
M1000C43	1" x .438 (25.4 x 11.13)	.562 (14.27)	1.06 (26.9)	1" - 14
M250C100	1/4" x .083 (6.35 x 2.10)	.125 (3.18)	.64 (16.3)	1/4" - 28
M375C100	3/8" x .125 (9.53 x 3.18)	.219 (5.56)	.68 (17.38)	3/8" - 24
M562C100	9/16" x .187 (14.29 x 4.78)	.281 (7.14)	1.01 (25.7)	9/16" - 18
M312C150	5/16" x .062 (7.94 x 1.57)	.125 (3.18)	.71 (18.0)	5/16" - 24

*Thread is left-hand national fine (Class 2). All dimensions for reference only and subject to change.

Installation: Cone & Thread Make-up Procedure

Approximate Number of Turns to Thread Tubing

TABLE 5 (Manual Threading)		
Male Connection	Number of Turns	Shortest Nipple w/Manual Tool = Length
SM250CX	9	3.5"
SM375CX	9	3.5"
SM562CX10/20	8-1/2	3.7"
M250C	13-1/2	3.75"
M375C	15-3/4	4.25"
M562C	14-1/4	4.5"
M562C40	14-1/4	4.5"
M250C100	15-1/4	4.0"
M375C100	13-1/2	4.0"
M562C100	14-1/4	4.5"
M312C150	13-1/2	4.0"

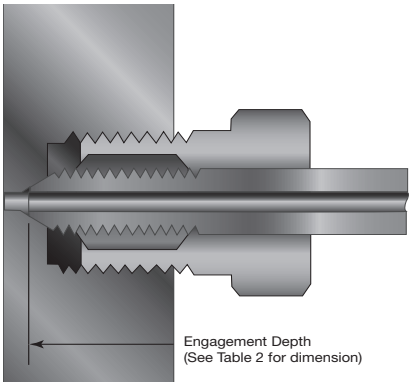

Completed Parker Autoclave Engineers
High Pressure & 9/16" F562C100 Ultra High Pressure
Connections

Engagement Depth Illustrations

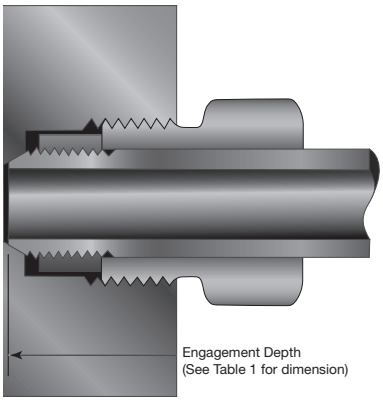

Completed Parker Autoclave Engineers
Medium Pressure & 1" F1000C43 Connection

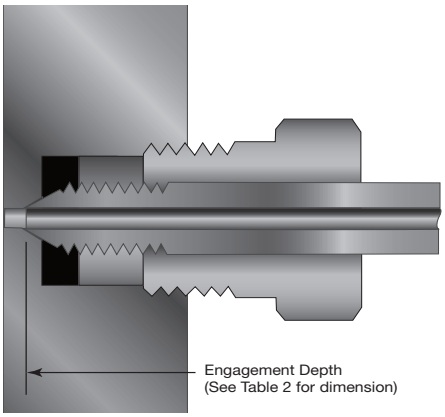

Completed Parker Autoclave Engineers
Ultra High Pressure Connections
1/4", 3/8" and 5/16"

Tel: +45 63 12 83 00 | Email: ps@hymatik.com | www.hymatik.com | Hvidkaervej 27a, DK-5250 Odense SV, Denmark

Installation: Cone & Thread Make-up Procedure

Assembly and Makeup of Connection

1. Inspect seat cone and tube cone to verify free of all lines and surface imperfections with tube face and cone edge completely smooth. Lubricate male threads of gland nut and collar/gland contact surface with a metal flake based thread lubricant. (see recommended lubricants on page 25-26 of this catalog)

Slip gland nut on tubing as shown (Fig. 5) and thread collar on tubing (turning counter-clockwise) until 1-1/2 to 2 full threads are exposed between collar and cone (Fig. 6).

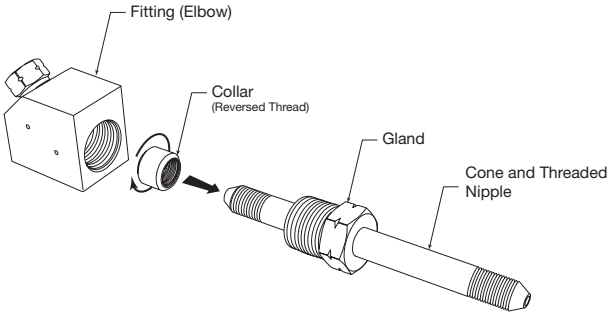

Figure 5

Note: A small amount of process tolerable lubricant, such as silicone grease or any lubricating oil, on the cone tip will help with the sealing process.

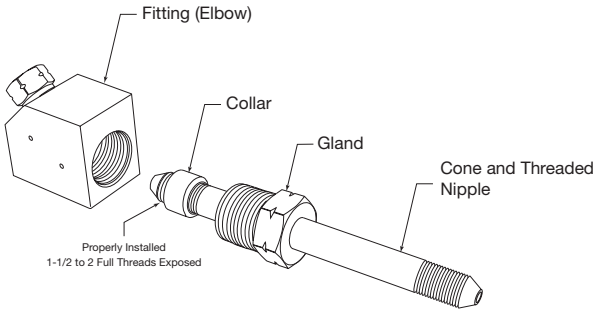

Figure 6

2. Insert tubing in connection, engage gland nut and tighten "finger-tight" at least 4 complete turns (Medium Pressure) and 5-6 Turns (High Pressure) - angular misalignment will not allow rotation with fingers and could cause leakage or gland nut gall - remove and determine cause of misalignment and correct.

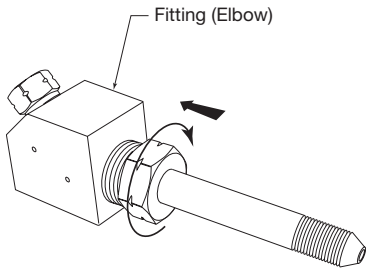

Figure 7

3. Tighten gland nut with torque wrench (REQUIRED) to specified values on page 16 or 17. When tightening, the use of an additional wrench is recommended to hold the fitting or valve body if not otherwise anchored.

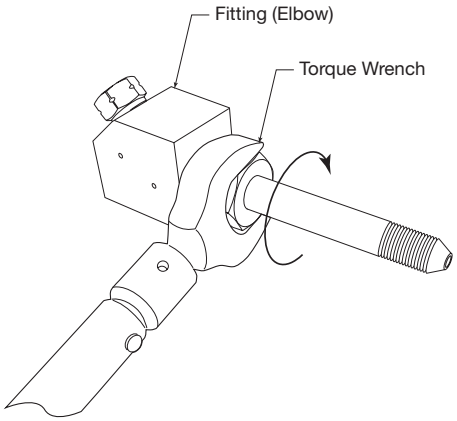

Figure 8

Cautionary Note: The torque used to seal Cone and Thread Connections is typically much less than used on compression fittings (1/8 to 1/4 turn of gland nut from finger-tight)

Recommended Thread Anti-Seize (Not for use on coned surfaces)

Copper Anti-Seize Lubricant:
P-3580 (16 oz. can)
P-3580-8 (8 oz. can)

Moly Paste (50-70%) Anti-Seize Lubricant:
P-9766 (16 oz. can)
(See recommended lubrication sites on pages 23-24)

Specifications: Coning & Threading Machine Ordering



Benefits

- Coning and Threading of Parker Autoclave Engineers Medium and High Pressure Tubing.
- Separate heads for coning and threading are powered by a single motor and drive system.
- New design collet / support system allows for easier coning and threading of long tube lengths.
- New design tube depth gauge eliminates movement of tubing during the threading operation.

Features

- 1/2-HP TEFC motor, capacitor start
- Pop-Open die prevents thread damage; no reversing necessary on threading
- Complete tooling available; order separately
- Supplied with oil pump and reservoir
- Optional oil reservoir heater for operation below 65° F (18.3°C)
- CE marked on 220 VAC units standard
- Unit mounted on stand with locking casters for ease of mobility and stability
- Guard option - see next page

Ordering Procedure

Tooling must be ordered separately see Table 2 listing

TABLE 1: Ordering Part Numbers	
Model	Description
AEGCTM-2	115 VAC 60Hz
AEGCTM-2E-CE	220 VAC 50hz - CE Marked
AEGCTM-2WOH	Standard units with Oil Heater
AEGCTM-2EWOH-CE	

Approximate Dimensions:
56" Height x 28" Width x 20" Depth
(142cm x 71cm x 51 cm)

Shipping Weight:
350 pounds (158.7 Kg)

Cutting Oil:
Part Number: P-8699, 3-1/2 Gallon (11.36 liter) equals Reservoir Capacity

Note 1: A minimum of 5 inches (127mm) straight length of tubing is required to perform coning and threading operations.

Video Aids Available (Coning and Threading DVD):
Part Number: P-9930-D

TABLE 2: Tooling				
Tube Size Inches (mm)	Collet Only (set)	Cutters Only (set)	Die Chasers (set)	Complete Set
1/4" x .109 (6.35 x 2.77)	*** Not Recommended - Contact Factory**			
1/4" x .083 (6.35 x 2.10)	*** Not Recommended - Contact Factory**			
5/16" x .062 (7.94 x 1.57)	CTM5C-2	CTM5B	AEGCTM5D	AEGCTM5-2
3/8" x .203 (9.53 x 5.16)	CTM6C-2	CTM6BX	AEGCTM6D	AEGCTM6X-2
3/8" x .125 (9.53 x 3.18)	CTM6C-2	CTM6B	AEGCTM6D	AEGCTM6-2
9/16" x .359 (14.29 x 9.12)	CTM9C-2	CTM9BXX	AEGCTM9D	AEGCTM9XX-2
9/16" x .312 (14.29 x 7.92)	CTM9C-2	CTM9BX	AEGCTM9D	AEGCTM9X-2
9/16" x .187 (14.29 x 4.78)	CTM9C-2	CTM9B	AEGCTM9D	AEGCTM9-2
9/16" x .250 (14.29 x 6.35)	CTM9C-2	CTM9B40	AEGCTM9D	AEGCTM940-2
3/4" x .516 (19.05 x 13.11)	CTM12C-2	CTM12BX	AEGCTM12D	AEGCTM12X-2
3/4" x .438 (19.05 x 11.13)	CTM12C-2	CTM12B	AEGCTM12D	AEGCTM12-2
1" x .688 (25.4 x 17.48)	CTM16C-2	CTM16BX	AEGCTM16D	AEGCTM16X-2
1" x .562 (25.4 x 14.27)	CTM16C-2	CTM16B	AEGCTM16D	AEGCTM16-2
1" x .438 (25.4 x 11.13)	CTM16C-2	CTM16BXX	AEGCTM16D	AEGCTM16XX-2

* 1/4" tubing is too small for use in this machine without specialized training.

Tel: +45 63 12 83 00 | Email: ps@hymatik.com | www.hymatik.com | Hvidkaervej 27a, DK-5250 Odense SV, Denmark

Oil / Chip Guard

A threading die oil/chip guard is now standard on our AEGCTM machines. This guard prevents oil and metal chips from being ejected onto the operator.

The guard is a swing away Plexiglass design providing protection from splashing oil or thrown chips while allowing full access to the die head.

A retrofit guard option is available to upgrade machines already in operation (-2 models). The kit will contain all required items along with instructions.

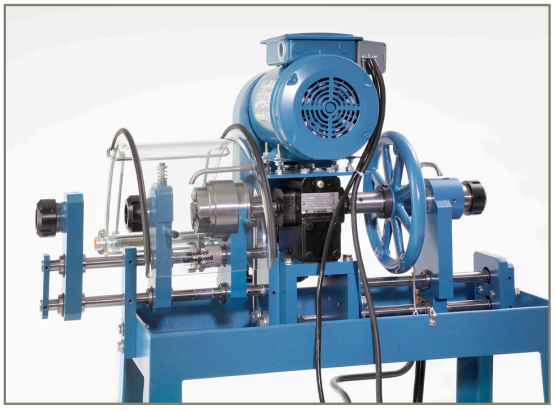

Example:

AEGCTM-2GK (Retrofit kit catalog number)



Coning & Threading Machine Operation

Note:
Detailed Operational Instructions are supplied with the machine in two forms, printed or USB jump drive. Refer to these instructions for tooling installation, machine adjustment, and maintenance instructions. Download from our website at www.Autoclave.com.

Tel: +45 63 12 83 00 | Email: ps@hymatik.com | www.hymatik.com | Hvidkaervej 27a, DK-5250 Odense SV, Denmark

Installation: QSS Manual/Wrench Assembly Instructions (Sizes: 1/4" to 3/8" only)

Step 1:

Cut tubing to length and deburr. Allow extra length for proper engagement (per table below).

Outside Diameter Tube Size inches (mm)	Extra Allowance for Engagement** inches (mm)
1/4" (6.35)	0.75 (19.05)
3/8" (9.53)	0.81 (20.64)

Step 2:

Slip gland nut and sleeve onto tubing.

Note: Be sure to remove gland and sleeve from components and slide them onto the tubing before inserting the tubing into the components.

Make sure larger end of sleeve is toward gland.

Push tubing into valve or fitting until it bottoms. If process tolerable, a slight amount of inert grease on the nose of the compression sleeve is recommended to improve sealability. Lubrication of the gland threads will also aid in assembly.

Step 3:

Rotate Gland Nut "finger-tight" and then a bit more with wrench until Sleeve begins to Grip Tubing (wrench-tight).

Step 4:

Note starting position of wrench.†
Starting now at the "wrench-tight" position, turn 1-1/4 turns to complete the QSS connection.*

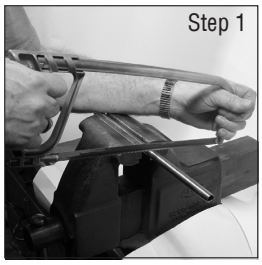



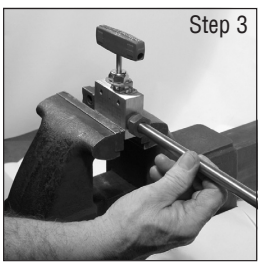

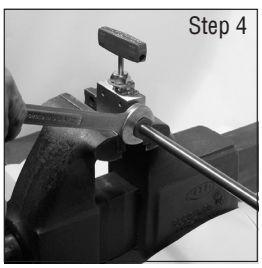

Completed Connection

The illustration below shows the condition of sleeve and tubing after completion of "sleeve setting." The sleeve has cut into the tubing as it moved forward into the tapered seat, upsetting material ahead of it and establishing a shoulder on the tubing to provide positive mechanical support for the tubing end-load. A properly set sleeve cannot be displaced back and forth along the tubing but may be rotated around the tubing.

Figure 1

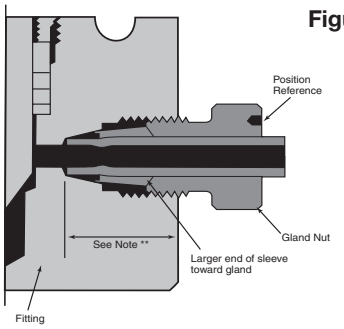

Bite into tubing exaggerated for clarity

Reassembly and Adapter/Plug Connection

To reassemble a connection, insert tubing with sleeve and gland nut into valve or fitting, finger tight. Rotate to "wrench-tight" position and then 1/4 turn more for gas-tight seal or use Torque Chart in Step 6 on next page. Male Adapters and Plugs do not require same torque to seal, see chart below:

QSS Male Adapter or Plug Torque	
Size	Torque
1/4"	10 ft-lbs
3/8"	20 ft-lbs
9/16"	45 ft-lbs
3/4"	100 ft-lbs
1"	225 ft-lbs

Notes:

** Distance tubing protrudes into connection from face of fitting.

† A small blind hole on the face of the gland is provided for a starting position reference.

Parker Autoclave Engineers Medium Pressure tubing is required for these connection components.

When assembling tubing into fittings such as in rack systems, alignment of tubing is critical in connection port make up. Do not force tubing into alignment with connections as bending stress will effect the sealing capability of the connections.

hymatik

Tel: +45 63 12 83 00 | Email: ps@hymatik.com | www.hymatik.com | Hvidkaervej 27a, DK-5250 Odense SV, Denmark

Installation: QSS Hydraulic Preset Instructions (Sizes: 1/4" to 3/4")

Step 1:

Cut tubing to length and deburr. Allow extra length for proper engagement (per table below).

Outside Diameter Tube Size inches (mm)	Extra Allowance for Engagement** inches (mm)
1/4" (6.35)	0.75 (19.05)
3/8" (9.53)	0.81 (20.64)
9/16" (14.27)	1.25 (31.75)
3/4" (19.04)	1.63 (41.28)
*1" (25.40)	1.75 (44.455)

** Distance tubing protrudes into connection from face of fitting.

Step 2:

Slip gland nut and sleeve onto tubing. Lubricate the nose of the compression sleeve or the tapered die surface with a moly-based metal to metal lubricant. We recommend Jetlube MP-50. Make sure larger end of sleeve is toward gland nut. Push tubing into hydraulic set tool until it bottoms into the setting die.

Step 3:

Thread gland nut into cap until the hex touches the top surface.

Step 4:

Pressurize cylinder up to the set pressure (per table below.)

DO NOT EXCEED THE SET PRESSURE IN CHART BELOW.

AS WITH ALL HIGH PRESSURE EQUIPMENT, USE CAUTION DURING OPERATION. SET TOOL MAWP IS 10,000 PSI (690 BAR)

Outside Diameter Tube Size inches (mm)	Set Pressure for Full Tubing Bite inches (mm)
1/4" (6.4) and 3/8" (9.5)	4500 (310) to 5000 (344)
9/16" (14.3)	9000 (620) to 10000 (690)
3/4" (19.0)	8000 (552) to 10000 (690)
*1" (25.4)	9000 (620) to 9500 (655)

Vent all presssure from hydraulic cylinder. Remove gland assembly from preset tool and inspect biting end of sleeve. Looking inside the biting end of the sleeve you should see a shoulder pushed up from the tubing material. A properly set sleeve must spin freely to achieve a seal. If the sleeve is seized in place after setting, discard and make another.

Do not set a sleeve more than once.

Step 5:

Install gland assembly into valve/fitting. If process toler able, a slight amount of inert grease on the nose of the compression sleeve should be used to aid sealing. Lubrication of gland threads will also aid in assembly. Turn to “Wrench-Tight” position where torque to turn increases dramatically.

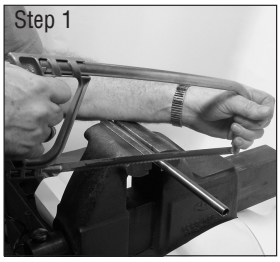

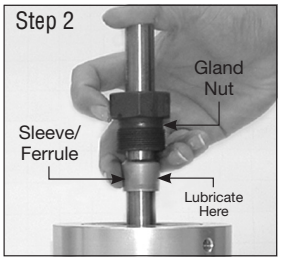

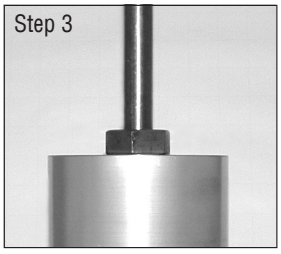



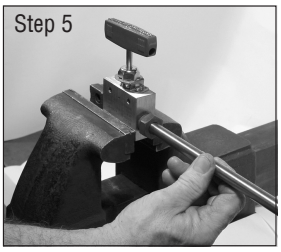

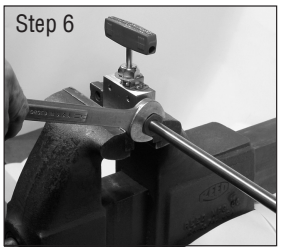

Step 6:

Note starting position of wrench.† Tighten gland nut 1/4 turn to complete the QSS connection. Since the mechanical bite has already been completed with the hydraulic set tool, it is permissible to vary the torque to achieve sealing.

Size (in)	Required Torque ft-lbs. (Nm)	Max. Torque ft-lbs. (Nm)	Torque Wrench Adapter Size	Wrench Adapter Part #
1/4"	30 (40)	50 (70)	5/8"	AE003321
3/8"	35 (50)	75 (100)	3/4"	AE003322
9/16"	90 (120)	175 (240)	1-3/16"	AE003324
3/4"	175 (240)	325 (440)	1-1/2"	AE000170
*1"	375 (500)	635 (860)	1-3/4"	AE001067
Not for use with Male Adapters or Plugs (see chart on previous page)				

† A small blind hole on the face of the gland is provided for a starting position reference.

Completed Connection

The hydraulically set sleeve has cut into the tubing as it moved forward into the tapered seat, upsetting material ahead of it and establishing a shoulder on the tubing to provide positive mechanical support for the tubing end-load. A properly set sleeve cannot be displaced back and forth along the tubing but may be rotated around the tubing.

Tel: +45 63 12 83 00 | Email: ps@hymatik.com | www.hymatik.com | Hvidkaervej 27a, DK-5250 Odense SV, Denmark

Installation: QSS Hydraulic Preset (HST-912) Instructions & Overview

Reassembly & Adapter/Plug Connection

To reassemble a connection, insert tubing with sleeve and gland nut into valve or fitting, finger tight. Rotate to "wrench-tight" position, then 1/4 turn more for gas-tight seal or use torque chart shown in Step 6 on page 13. Male Adapters and Plugs do not require same torque to seal, see chart on page 12.

Parker Autoclave Engineers Medium Pressure tubing is required for these connection components.
When assembling tubing into fittings such as in rack systems, alignment of tubing is critical in connection make up.

Do not force into alignment with connections as bending stress will effect the sealing capability of the connections.

Hydraulic Sleeve Set Tool (HST-912)

The hydraulic set tool requires minimal assembly and is easy to use. There are three models available; a manual hydraulic pump, an air operated hydraulic pump and a complete stand mounted system with air pumps and tooling for all five connection sizes.

The HST-912 Parker Autoclave hydraulic sleeve set tool is designed for use with the QS Series glands, sleeves and Parker Autoclave tubing. This tool is required to set the sleeve for the 9/16" and 3/4" sizes and recommended for the 1/4" and 3/8" sizes. It not only produces the required bite into the tubing, it is much easier than trying to set the sleeve the conventional method. The tool comes in a self contained portable, lockable case complete with hand or air pump, cap and dies for all sizes up to 3/4".

HST-912 Specifications

Hand Pump: Single stage hydraulic (standard)

Hydraulic Cylinder: 10,000 psi, 2.5" 25 ton

Base & Housing: Aluminum anodized

Die and Cap: Precision hardened steel

Gauge: 15,000 psi (1034 bar)

Operating Pressure: 0 to 10,000 psi (0 to 690 bar).

Required Air Pressure: 30 psi (2.1 bar) minimum 120 psi (8.3 bar) maximum

Reservoir Capacity: 24 cu. in. (393cm^3)

Air lubricator/air separator is recommended for air operated units.

! CAUTION !

Do not operate Hydraulic Cylinder without setting sleeve and tube as this may result in damage to the die housing!

HST-912 Bill of Materials	Part Number
Hydraulic Cylinder	90588
Gauge	90594
Adapter	90593
Housing	101F-3408
Hydraulic Pump	P-1893
Hose	P-1894
1/4" Die	HSTD4
3/8" Die	HSTD6
9/16" Die	HSTD9
3/4" Die	HSTD12
1/4" Cap	HSTC4
3/8" Cap	HSTC6
9/16" Cap	HSTC9
3/4" Cap	HSTC12
Moly Paste, 1 lb. Can	P-9766
10 to 150 ft-lbs, Torque Wrench, 1/2" Drive	AE003325
50 to 250 ft-lbs, Torque Wrench, 1/2" Drive	AE003326
5/8" Crows Foot Wrench Adpt, 1/2" Drive	AE003321
3/4" Crows Foot Wrench Adpt, 1/2" Drive	AE003322
1-3/16" Crows Foot Wrench Adpt, 1/2" Drive	AE003324
1-1/2" Crows Foot Wrench Adpt, 3/4" Drive	AE000170
1-3/4" Crows Foot Wrench Adpt, 3/4" Drive	AE001067
Adjustable Spanner Wrench	P-1970

Ordering Information

HST-912:
Complete tool kit with hand pump (Sizes 1/4" to 3/4")

HST-912TW:
Complete tool kit as above with torque wrench and adapters

HST-912A:
Complete tool kit as above with air-operated, foot activated pump (Air Operated Pump #P-1948)

HST-912ATW:
HST-912A tool kit with torque wrench and adapters

HST-S:
Complete Double Air-Drive Press Stand System with dies, torque wrenches and tooling for all tubing sizes including 1".

Tel: +45 63 12 83 00 | Email: ps@hymatik.com | www.hymatik.com | Hvidkaervej 27a, DK-5250 Odense SV, Denmark

Installation: QSS Hydraulic Preset (HST-912) Instructions

HST-912 Cap and Die Changeout Instructions

To switch tooling to another size only requires interchanging two (2) parts.

1. Using a 5/32" Allen Wrench, loosen the 5/16" set screw that locks the threaded cap from rotating.
2. Use the included spanner wrench to rotate and remove the threaded steel cap from aluminum housing.
3. Turn the tool assembly upside down the remove the die from inside the housing.
4. Install the die of the appropriate connection size you wish to use. The solid side of the die should be facing down towards the hydraulic cylinder.
5. Install the appropriate size cap to match the size of the die. Insert cap with the spanner holes facing up. Rotate the cap with the spanner wrench until it bottoms out on the shoulder side of the housing.
6. Thread in the 5/16" set screw until it bottoms out on the cap threads. Tighten set screw to prevent movement during use.

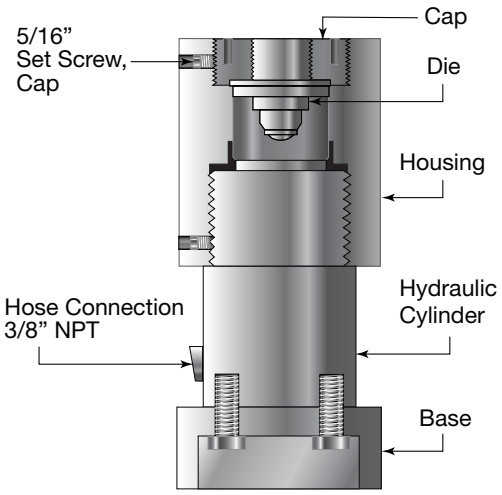

Heavy Duty Torque Wrenches and Heavy Duty Crows Foot Wrench Adapters

Recommended for use with Parker Autoclave Quick Set System (QSS) and Flared Cone Connection (FCC) Fittings and Valves. (will work with standard products)

Torque Wrench	Torque Range
AE003325	10 to 150 ft. lbs (10 to 203 Nm), 1/2" Drive
AE003326	75 to 250 ft. lbs (102 to 339 Nm), 1/2" Drive
AE003327	100 to 600 ft. lbs (136 to 814 Nm), 3/4" Drive

Heavy Duty Torque Wrench Adapters	
Wrench Adapter Number	Packing Gland or Tube Nut Hex Size (inches)
AE005904	1/2" x 1/2"
AE005905	9/16" x 1/2"
AE003321	5/8" x 1/2"
AE003322	3/4" x 1/2"
AE005906	13/16" x 1/2"
AE005907	7/8" x 1/2"
AE003323	15/16" x 1/2"
AE005908	1" x 1/2"
AE005909	1-1/16" x 1/2"
AE003324	1-3/16" x 1/2"
AE005910	1-3/8" x 1/2"
AE000170	1-1/2" x 3/4"
AE001067	1-3/4" x 3/4"
AE005911	1-7/8" x 3/4"
AE003826	2" x 3/4"
AE000171	2-3/4" x 3/4"
AE005590	1/2" Drive to 3/4" Drive Adapter



Standard Duty Torque Wrenches (old style) can be found on page 16

Operation/Maintenance: Torque Values

Medium & High Pressure Connection, Valve Packing, Running and Seating

Parker Autoclave Engineers Micrometer Adjustable Torque Wrenches

Torque Wrench	Torque Range
P-1680	20 to 150 ft. lbs (27 to 203 Nm)
91020	75 to 250 ft. lbs (102 to 339 Nm)
See Heavy Duty Torque Wrenches on Page 15	100 to 600 ft. lbs (136 to 814 Nm)

Accurate tightening for all Parker Autoclave Engineers valve packing glands and tube nuts is essential. The wrench can be adjusted to the ranges shown above and is used with interchangeable wrench adapters for hex sizes from 1/2” through 1-7/8”. Part numbers for wrench adapters are listed below.

Wrench adapters sold separately.

Standard Wrench Adapters	
Wrench Adapter Number	Packing Gland or Tube Nut Hex Size (inches)
P-1681	1/2
P-1682	9/16
P-1683	5/8
P-9813	3/4
P-1685	13/16
P-1686	7/8
P-1687	15/16
P-9901	1
P-1688	1-1/16
P-1689	1-3/16
P-1690	1-3/8
P-6040	1-1/2
91269 †	1-3/4
P-10076 †	1-7/8

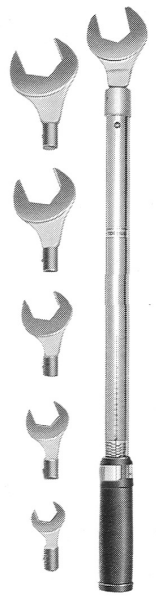

† Part numbers shown for replacement requirements only. For new orders use Heavy Duty wrench adapters and Wrench found on page 15.

Heavy Duty Torque Wrenches and Open Face Wrench Adapters are available.

Please see page 15 for product detail and part numbers

Full Pressure Connection Gland Torque

(For CW 316 Stainless Steel & Medium Pressure 2507 Super Duplex Materials)

	Connection Type	Gland Nut Hex Size (inches)	Required Torque[1]	Required Torque Dry-Moly Coated	Pressure MAWP PSI (Bar)
			ft.-lbs. (N.m)		
Medium Pressure	SF250CX (1/4" MP)	1/2	20 (27)	15 (21)	20,000
	SF375CX (3/8" MP)	5/8	30 (41)	20 (27)	20,000
	SF562CX10 (9/16" MP)	15/16	55 (75)	40 (55)	15,000
	SF562CX20 (9/16" MP)	15/16	55 (75)	40 (55)	20,000
	SF750CX10 (3/4" MP)	1-3/16	75 (102)	55 (75)	15,000
	SF750CX20 (3/4" MP)	1-3/16	90 (122)	70 (95)	20,000
	SF1000CX10 (1" MP)	1-3/8	135 (187)	100 (136)	15,000
	SF1000CX20 (1" MP)	1-3/8	135 (187)	100 (136)	20,000
	SF1500CX (1-1/2" MP)	1-7/8	200 (272)	160 (217)	15,000
High Pressure	F250C (1/4" HP)	5/8	25 (34)	-	60,000
	F375C (3/8" HP)	13/16	50 (68)	-	60,000
	F562C (9/16" HP)	1-3/16	75 (102)	-	60,000
	F562C40 (9/16" HP-40K)	1-3/16	60 (82)	-	40,000
	F1000C43 (1" HP-43K)	1-3/8	180 (244)	-	43,000
Ultra High Pressure	F250C100 (1/4" UHP-100K)	3/4	50 (68)	-	100,000
	F375C100 (3/8" UHP-100K)	3/4	105 (143)	-	100,000
	F562C100 (9/16" UHP-100K)	1-3/16	125 (170)	-	100,000
	F312C150 (5/16" UHP-150K)	3/4	70 (95)	-	150,000

[1] Required torque shown is for manually lubricated (liquid or paste anti-seize) glands. For torque reduction when using glands supplied with Dry-Moly coating see "Reduced Pressure/Special Material" Chart on next page.

For torques at lower working pressures (specialty materials) see “Special Material” Torque Chart on next page.

Tel: +45 63 12 83 00 | Email: ps@hymatik.com | www.hymatik.com | Hvidkaervej 27a, DK-5250 Odense SV, Denmark

Operation/Maintenance: Torque Values

Reduced Pressure/Special Material Torque Table: Pressure psi (bar) vs. Torque ft.-lbs. (N.m)

Note: ALL Parker Autoclave Engineers Pressure Containing products will have Maximum Allowable Working Pressure (@ Room Temperature) indelibly marked at an easy to read location. Most "Special Materials" are rated to a pressure less than our standard Cold Worked UNS S31600/S31603 316/316L Stainless Steel Material and use of the chart below is necessary for proper installation of Cone & Thread Connections at these lower pressures.

Use of this chart is also recommended when application pressure is less than the MAWP rating on the part. This will create a seal circle in the connection at a point before max insertion depth is reached - enhancing the lifetime of the product.

Connection	Pressure psi (bar) vs. Torque ft-lb (N.m)										** Dry-Moly Coat Torque Reduction
	Minimum	5,000 (345)	10,000 (690)	15,000 (1034)	20,000 (1379)	25,000 (1724)	30,000 (2068)	40,000 (2758)	50,000 (3447)	60,000 (4137)	
SF250CX (1/4" MP)	10 (13.6)	10 (13.6)	10 (13.6)	15 (20.3)	20 (27.1)	-	-	-	-	-	25%
SF375CX (3/8" MP)	10 (13.6)	10 (13.6)	15 (20.3)	25 (33.9)	30 (40.7)	-	-	-	-	-	30%
SF562CX10 (9/16" MP)	20 (27.1)	30 (40.7)	45 (61)	55 (74.6)	-	-	-	-	-	-	30%
SF562CX20 (9/16" MP)	15 (20.3)	15 (20.3	30 (40.7)	40 (54.2)	55 (74.6)	-	-	-	-	-	
SF750CX10 (3/4" MP)	25 (33.9)	40 (54.2)	60 (81.3)	75 (101.7)	-	-	-	-	-	-	30%
SF750CX20 (3/4" MP)	20 (27.1)	25 (33.9	45 (61)	70 (94.9)	90 (122)	-	-	-	-	-	
SF1000CX10 (1" MP)	40 (54.2)	65 (88.1)	115 (156)	135 (183)	-	-	-	-	-	-	25%
SF1000CX20 (1" MP)	35 (47.5)	50 (67.8)	100 (136)	115 (156)	135 (183)	-	-	-	-	-	
SF1500CX (1-1/2" MP)	110 (149)	110 (149)	160 (217)	200 (271)	-	-	-	-	-	-	20%
F250C (1/4" HP)	10 (13.6)	10 (13.6)	10 (13.6)	10 (13.6)	10 (13.6)	15 (20.3)	15 (20.3)	20 (27.1)	25 (33.9)	25 (33.9)	N/A
F375C (3/8" HP)	10 (13.6)	10 (13.6)	10 (13.6)	15 (20.3)	20 (27.1)	25 (33.9)	25 (33.9)	35 (47.5)	45 (61)	50 (67.8)	N/A
F562C (9/16" HP)	15 (20.3)	15 (20.3)	15 (20.3)	20 (27.1)	25 (33.9)	35 (47.5)	40 (54.20)	50 (67.86)	65 (88.1)	75 (102)	N/A
F562C40 (9/16" HP)	15 (20.3)	15 (20.3)	15 (20.3)	25 (33.9)	30 (40.7)	40 (54.2)	45 (61)	60 (81.3)	-	-	N/A
F1000C43 (1" HP 43K)	30 (40.7)	50 (67.8)	65 (88.1)	75 (101.7)	100 (136)	125 (170)	150 (203)	180 (244)	-	-	25%
	-	-	-	-	-	60,000 (4137)	70,000 (4825)	80,000 (5515)	100,000 (6895)	150,000 (10340)	
F250C100 (1/4" UHP)	-	-	-	-	-	20 (27)	30 (41)	35 (48)	50 (68)	-	N/A
F375C100 (3/8" UHP)	-	-	-	-	-	40 (54)	60 (81)	75 (102)	105 (143)	-	N/A
F562C100 (9/16" UHP)	-	-	-	-	-	75 (102)	90 (122)	100 (136)	125 (170)	-	N/A
F312C150 (5/16" UHP)	-	-	-	-	-	35 (48)	35 (48)	35 (48)	45 (61)	70 (95)	N/A

**All special material glands dry moly coated will have lower set torques. Reduce the torque found or computed from chart above percentages shown in this column.

Needle Valve Stem Maximum Running and Seating Torques * (Typical Values)

Valve Series	Tube Size (inches)	Running Torque	Seating Torque	Pressure psi (bar)
		inch-lbs. (N.m)		
10V (1/4" to 1/2" For Reference Only)	1/8	25 (3)	35 (4)	15,000 (1034)
	1/4	40 (5)	50 (6)	15,000 (1034)
	3/8	40 (5)	50 (6)	15,000 (1034)
	1/2	60 (7)	80 (9)	10,000 (690)
SW	1/4	25 (3)	35 (4)	15,000 (1034)
	3/8	40 (5)	50 (6)	15,000 (1034)
	1/2	70 (8)	90 (10)	10,000 (690)
15SM 10P12-16 15QS12 & 16	9/16	60 (7)	105 (12)	15,000 (1034)
	3/4	210 (24)	290 (34)	15,000 (1034)
	1	180 (20)	580 (64)	15,000 (1034)
	1-1/2	1100 (124)	1560 (176)	15,000 (1030)
20SM 15P4-9 15QS4-9 20DBNV12	1/4, 3/8	40 (5)	55 (6)	20,000 (1379)
	9/16	60 (67)	110 (12)	20,000 (1379)
	3/4	300 (34)	360 (41)	20,000 (1379)
	1	360 (41)	600 (68)	20,000 (1379)
15Y	Various	65 (7)	144 (16)	15,000 (1034)
43Y	1	25 (3)	45 (5)	43,000 (2965)
50Y	9/16	85 (10)	180 (20)	50,000 (3450)
20GV	Various	50 (6)	55 (6)	20,000 (1379)
30GV	Various	50 (6)	55 (6)	30,000 (2068)
30SC	1	360 (41)	600 (68)	30,000 (2068)
43SC	1	720 (82)	800 (90)	43,000 (2965)
40SC	9/16	360 (41)	445 (50)	40,000 (2758)
30VM 20DBNV	1/4	40 (5)	55 (6)	30,000 (2068)
	3/8	45 (5)	55 (6)	30,000 (2068)
	9/16	50 (6)	55 (6)	30,000 (2068)
40VM	9/16	40 (5)	55 (6)	40,000 (2758)
60VM	1/4, 3/8, 9/16	65 (7)	70 (8)	60,000 (4137)
100VM	1/4, 5/16, 3/8	100 (11)	120 (14)	100,000 (6895)
	9/16	460 (52)	520 (59)	100,000 (6895)
150V	5/16	312 (35)	384 (43)	150,000 (10340)

* These are not specifications.

Note: All valve stem torques are based on standard PTFE packing. For valves with option "**TG**" (PTFE Glass) or "**GY**" (graphite, yarn packing), the following equations should be used to estimate torques.

Option "TG"
Running Torque = Running Torque (x 1.1)
Seating Torque = Running Torque (x 1.1) + Seating Torque - Running Torque

Option "GY"
Running Torque = Running Torque (x 2)
Seating Torque = Running Torque (x 2) + Seating Torque - Running Torque

Parker AE Flat Top/Bottom Adapters

	Size (inches)	Maximum Working Pressure psi (bar)	Connection	Required Torque ft. - lbs. (N.m)
Flat Top Gasket	9/16-18	10,000 (690)	F562FT	60 (81.3)
Flat Bottom Gasket	7/16-20	10,000 (690	F437FB	25 (33.9)
	9/16-18	10,000 (690	F562FB	40 (54.2)
	3/4-16	5,000 (345)	F750FB	60 (81.3)

Parker AE Packing Glands

	Tube/Pipe O.D. Size (inches)	Packing Gland Hex (inches)	Required Torque[1] ft. - lbs. (N.m)
10V (1/4" to 1/2" For Reference Only)	1/8	1/2	12 (16)
	1/4	13/16	40 (54)
	3/8	13/16	40 (54)
	1/2	13/16	30 (41)
SW	1/4	5/8	30 (41)
	3/8	5/8	40 (54)
	1/2	13/16	50 (68)
15P 10P 15SM 20SM 15QS	1/4, 3/8	5/8	40 (54)
	9/16	13/16	80 (109)
	3/4	13/16	Note 2
	1	1-3/8	20 (27)
	1-1/2	1-5/16	550 (745)
20DBNV	3/8, 9/16	13/16	40 (54)
	3/4	15/16	Note
15Y	3/4	15/16	130 (176)
	1	1-1/16	150 (203)
43Y	1	1	150 (203)
50Y	9/16	15/16	85 (115.2)
20GV	Various	13/16	40 (54)
30GV	Various	13/16	40 (54)
30SC/43SC	1	1-3/8	230 (312)
40SC	9/16	15/16	140 (190)
30VM	1/4, 3/8, 9/16	13/16	40 (54)
40VM	9/16	13/16	40 (54)
60VM	1/4, 3/8. 9/16	13/16	60 (81)
100VM	1/4, 3/8	15/16	60 (81)
	9/16	15/16	150 (203)
150V	5/16	1-3/8	150 (203)
10VRMM	9/16	9/16	20 (27)
30VRMM	3/4	13/16	50 (68)
60VRMM	1/4, 3/8	13/16	50 (68)
15PVRMM	1/2 NPT	13/16	40 (54)

Note 1: Torque may vary ±10%. Torque values apply to standard PTFE packing. For graphite yarn packing, add 25% to the above values.

Note 2: 3/4 turn past finger tight with hex wrench.

Tel: +45 63 12 83 00 | Email: ps@hymatik.com | www.hymatik.com | Hvidkaervej 27a, DK-5250 Odense SV, Denmark

Operation: Female Port Connection Dimensions

Parker Autoclave SpeedBite SW* (SW Series Valves)

15,000 psi (1/2" = 10,000 psi) Maximum Pressure

Tube Outside Diameter (Inches)	Connection Type	Dimensions - inches (mm)							
		A	B	C	D	E	F	G	H
1/4	SW250	29/64 (11.5)	1/2 -20	.34 (8.6)	.44 (11.1)	.69 (17.5)	.35 (8.9)	"F" .257 (6.5)	.128 (3.3)
3/8	SW375	37/64 (14.7)	5/8 -18	.38 (9.6)	.47 (11.9)	.75 (19.1)	.48 (12.1)	"W" .386 (9.8)	.250 (6.4)
1/2	SW500	3/4 (19.1)	13/16 -16	.38 (9.6)	.50 (12.7)	.81 (20.6)	.60 (15.21)	.516 (13.11)	.375 (15.21)

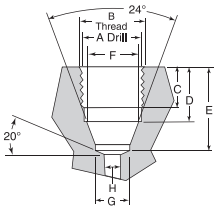

Parker Autoclave SpeedBite W* (10V2 Valve only - other sizes reference only)

15,000 psi Maximum Pressure

Tube Outside Diameter (Inches)	Connection Type	Dimensions - inches (mm)							
		A	B	C	D	E	F	G	H
1/16 1/8	W062 W125	"Q" .332 (8.4)	3/8 -24	.22 (5.6)	.31 (7.9)	.47 (11.9)	.19 (4.8)	#30 .129 (3.3)	.055 (0.94)
1/4 Reference only	W250	11/16 (17.4)	3/4 -16	.38 (9.6)	.44 (11.1)	.69 (17.7)	.35 (8.9)	"F" .257 (6.5)	.188
3/8 Reference only	W375	11/16 (17.4)	3/4 -16	.38 (9.6)	.44 (11.1)	.69 (17.76)	.48 (12.1)	"W" .386 (9.8)	.250

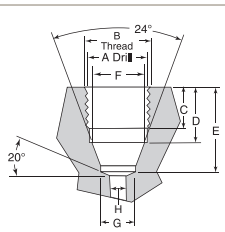

Parker Autoclave QSS (QS Series Valves)

15,000 psi Maximum Pressure

Tube Outside Diameter (Inches)	Connection Type	Dimensions - inches (mm)							
		A	B	C	D	E	F	G	H
1/4	QSF250	29/64 (11.5)	1/2 -20	.34 (8.6)	.44 (11.1)	.69 (17.5)	.34 (8.6)	"F" .257 (6.5)	.157 (4.0)
3/8	QSF375	37/64 (14.7)	5/8 -18	.38 (8.6)	.47 (11.9)	.75 (19.1)	.48 (12.1)	.038 (9.7)	.250 (6.4)
9/16	QSF562	7/8 (22.2)	15/16 -16	.57 (14.5)	.704 (17.9)	1.25 (31.8)	.712 (18.1)	.57 (19.3)	.359 (9.1)
3/4	QSF750	1-3/16 (30.2)	1-1/4 -18	.83 (21.08)	1.00 (25.4)	1.56 (39.6)	0.95 (24.1)	.76 (19.3)	.516 (14.6)
1	QSF1000	1-9/16 (39.7)	1-5/8 -16	.75 (19.1)	.88 (22.2)	1.56 (39.6)	1.24 (31.5)	1.02 (26.0)	.688 (17.5)

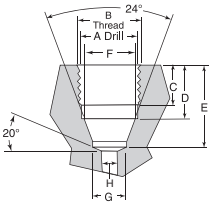

Note:
All dimensions are shown for reference only and should not be considered as actual machining dimensions.
* Port ("H") sizes may vary in certain adapters in catalog and over-ride dimension given above.
All threads are manufactured using Unified Thread Form - Class 2A or 2B fit.

For prompt service. Parker Autoclave Engineers stocks select products. Consult factory. All general terms and conditions of sale, including limitations of our liability, apply to all products and service sold.

Operation: Female Port Connection Dimensions

Parker Autoclave Medium Pressure SF** (SM Series Valves)

20,000 psi Maximum Pressure

Tube Outside Diameter (Inches)	Connection Type	Dimensions - inches (mm)					
		A	B	C	D	F	H
1/4	SF250CX	25/64 (9.9)	7/16 -20	.28 (7.1)	.50 (12.7)	.19 (4.8)	.109 (2.8)
3/8	SF375CX	33/64 (13.1)	9/16 -18	.38 (9.6)	.63 (16.0)	.31 (7.9)	.203 (5.2)
9/16	SF562CX10* SF562CX20	3/4 (19.1)	13/16 -16	.44 (11.1)	.75 (19.1)	.50 (12.7)	.359 (9.1) .312 (7.9)
3/4	SF750CX10* SF750CX20	61/64 (24.2)	3/4 -14 see Note 1	.50 (12.7)	.94 (23.9)	.63 (16.0)	.516 (13.1) .438 (11.1)
1	SF1000CX10* SF1000CX20	1-19/64 (32.9)	1-3/8 -12	.81 (20.6)	1.31 (33.3)	.88 (22.4)	.688 (17.5) .562 (14.3)
1-1/2	SF1500CX	1.790 (45.47)	1-7/8 -12	1.00 (25.4)	1.59 (40.38)	1.38 (35.05)	.937 (23.80)

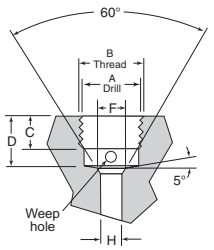

Note 1 = NPS Male Tap

* Connection used in fittings but rated for 20,000 psi (1379 bar). CX10 connection versions are typically rated to 15,000 psi

Note 1: 3/4-14 ia a straight pipe thread.

Parker Autoclave High Pressure F** (30, 43 SC and 30, 40, 60VM Valves)

60,000 psi Maximum Pressure

Tube Outside Diameter (Inches)	Connection Type	Dimensions - inches (mm)					
		A	B	C	D	F	H
1/4	F250C	33/64 (13.1)	9/16 -18	.38 (9.7)	.44 (11.1)	.17 (4.3)	.094 (2.4)
3/8	F375C	11/16 (17.4)	3/4 -16	.53 (13.5)	.62 (15.7)	.26 (6.6)	.125 (3.2)
9/16	F562C	1-3/64 (26.6)	1-1/8 -12	.63 (16.0)	.75 (19.1)	.38 (9.7)	.188 (4.8)
9/16	F562C40	1-3/64 (26.6)	1-1/8 -12	.63 (16.0)	.75 (19.1)	.38 (9.7)	.250 (6.4)
1	F1000C43	1-19/64 (32.9)	1-3/8 -12	.81 (20.6)	1.31 (33.3)	.88 (22.4)	.438 (11.1)

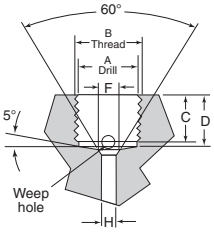

Parker Autoclave Ultra High Pressure F**C100 & F**C150 (100VM and 150V Valves)

100,000 and 150,000 psi Maximum Pressure

Tube Outside Diameter (Inches)	Connection Type	Dimensions - inches (mm)					
		A	B	C	D	F	H
1/4	F250C100	37/64 (14.7)	5/8 -18	.63 (16.0)	1.06 (26.9)	.25 (6.4)	.094 (2.4)
3/8	F375C100	37/64 (14.7)	5/8 -18	.63 (16.0)	1.06 (26.9)	.25 (6.4	.125 (3.2)
9/16	F562C100	1-3/64 (26.6)	1-1/8 -12	.63 (16.0)	.75 (19.1)	.38 (9.7)	.188 (4.8)
5/16	F312C150	37/64 (14.7)	5/8 -18	.63 (16.0)	1.06 (26.9)	.25 (6.4)	.094 (2.4)

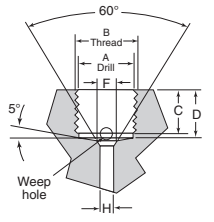

Note:
All dimensions are shown for reference only and should not be considered as actual machining dimensions.
All threads are manufactured using Unified Thread Form - Class 2A or 2B fit.

Tel: +45 63 12 83 00 | Email: ps@hymatik.com | www.hymatik.com | Hvidkaervej 27a, DK-5250 Odense SV, Denmark

Installation: Anti-Vibration Collet Gland/Reseating Tools & Instructions

Assembly Procedures

Anti-vibration collet gland assembly replaces the standard gland nut.

1. Cone and thread tubing as defined on pages 6-9.

2. Slide collet assembly onto tube and install collar as described in the assembly and makeup of connections on page 8. One or two threads should be exposed between the collar and cone.

3. Lubricate male threads on glands (medium pressure anti-vibration assemblies supplied with a baked on dry film lubricant. Lubrication not required.)

4. Tighten collet body (elongated gland) to specified torque on page 16-17. The high pressure collet will grip the tube when the connection gland is tightened.

5. For the medium pressure collet gland assembly, hand tighten the collet gland in place and further tighten 1-1/4 turns with a wrench. When tightening the medium pressure anti-vibe collet nut, hold the collet body with a wrench to prevent the body from turning and over tightening. This will lock the collet against the tube. For subsequent retightening of the medium pressure anti-vibration collet gland, use 3/4 turns past finger tight.

Medium & High Pressure Antivibration Gland Assemblies

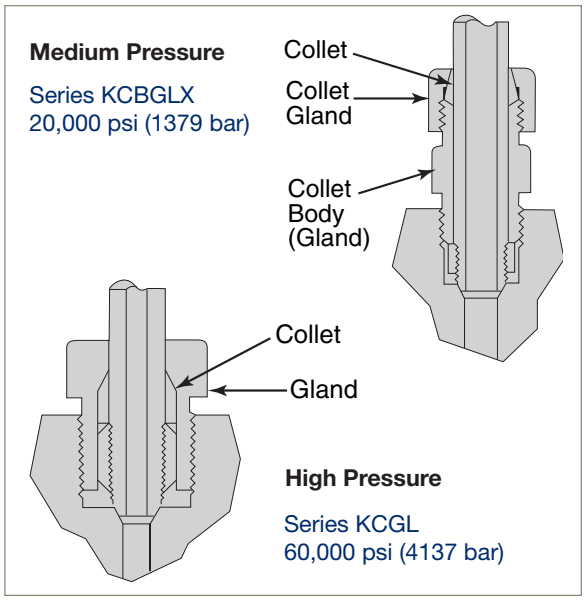

Note: Always use a back-up wrench on collet body to prevent over tightening of collet body into connection.
See individual Cone & Thread Fitting Brochures for additional information and ordering details.

Reseating Tool

For female TUBING CONNECTION cone seat

1. Clamp fitting in soft-jawed vise.

2. Thread gland nut into connection and tighten to 10 ft. lbs. (13.6 N.m).

3. Apply a medium weight high sulfur cutting oil generously through opening in nut. Cutting oil P-8784.

4. Insert reamer through guide bushing and press down firmly while rotating clockwise approximately two full turns, relieving pressure gradually toward end of second turn.

5. Remove reamer, guide nut and bushing and inspect cone seat.

6. Repeat steps 2,3,4 and 5, if necessary, until cone surface has been restored and finish is smooth.

7. Clean fitting thoroughly to remove all chips and residue.

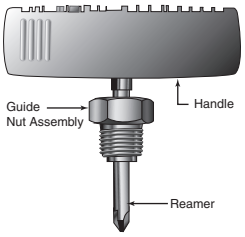

Connection Type	Reamer Complete	Guide Nut Assembly	Reamer	Handle
SF250CX	P-0270CX	A101A-2005	P-0270	202D-0596
SF375CX	P-0271CX	A2020-7310	P-0271	202D-0596
SF562CX	P-0272CX	A2030-7310	P-0896	202D-0596
SF750CX	P-1726CX	A102A-3376	P-1726	201D-0595
SF1000CX	P-1727CX	A102A-3375	P-1727	201D-0595
SF1500CX	91409	-	91409-R	-
F250C	P-0270C	A1010-0453	P-0270	202D-0596
F375C	P-0271C	A1020-0453	P-0271	202D-0596
F562C	P-0272C	A1030-0453	P-0272	202D-0596
F562C/C40	P-0272C	A1030-0453	P-0272	202D-0596
F1000C43	P-1727CX	A102A-3375	P-1727	201D-0595
F250C100	P-0271C150	A2040-7310	P-0271	202D-0596
F375C100	P-0271C150	A2040-7310	P-0271	202D-0596
F562C100	P-0272C	A1030-0453	P-0272	202D-0596
F312C150	P-0271C150	A2040-7310	P-0271	202D-0596

Operation: Hydraulic Tube Bender (HTB)



Single Pass Bending: High Pressure Tubing

The Parker Autoclave Engineers hydraulic tube bender is designed for 1/4" to 1" heavy wall tubing and provide fast, accurate and reliable bending with only one setup. The tube bender is complete with pump, cylinder, frame and bending shoes which are self contained in a portable, lockable case.
(Order number: **HTB**)

HTB Features:

Dimensions: 27.5”W x 14.0”H x 14.0”D
69.9cm x 35.6cm x 35.6cm).

Weight: 55 lbs. (29.9 Kg)

Single-stage hydraulic hand pump (standard)

Ram retractor valve relieves system pressure after bending. The spring loaded ram retracts for easy removal of tubing after bending is completed.

Quick release pivot pins lock and unlock easily for tube removal.

One-piece shoe locking pin locks bending shoe securely but allows for quick release to interchange shoes.

Rugged bending frame is lightweight, aircraft quality, aluminum alloy.

Precision one-piece bending shoes are permanent mold, heat-treated, aircraft quality, aluminum alloy.

Air-operated hydraulic pump option can be furnished in place of standard hand pump. (Add “**-A**” to order number) Operating pressure 0 to 10,000 psi (0 to 690 bar).

Required Air Pressure: 30 psi (2.1 bar) minimum 120 psi (8.3 bar) maximum.

Reservoir Capacity: 24 cu. in. (393cm3).

Available with optional hydraulic pressure gauge and gauge adapter. A lubricator/air separator is recommended for air operated units.

HTB Bend (Mandrel) Radius

Shoe Catalog Number	Tube Size Inches (mm)		†† Rated Pressure (bar)	†† Bend Inside Radius inches (mm)	Minimum Length Required 90° Bend inches (cm)
	Outside Diameter	Inside Diameter			
201A-6014	1/4 (6.35)	.083 (2.10)	60,000 (4137)	1.75 (44.5)	8 (20.3)
201A-6014	1/4 (6.35)	.109 (2.77)	20,000 (13794)	1.75 (44.5)	8 (20.3)
201A-6014	3/8 (9.53)	.125 (3.18)	60,000 (4137)	1.75 (44.5)	8 (20.3)
201A-6014	3/8 (9.53)	.203 (5.16)	20,000 (13794)	1.75 (44.5)	8 (20.3)
N/A **	5/16 (7.94)	.062 (1.57)	150,000 (10342)	6.00 (152.4)	8 (20.3)
201A-6016	9/16 (14.29)	.188 (4.78)	60,000 (4137)	2.62 (66.5)	14 (35.6)
201A-6016	9/16 (14.29)	.250 (6.35)	40,000 (2758)	2.62 (66.5)	14 (35.6)
201A-6016	9/16 (14.29)	.359 (9.12)	15,000 (1034)	2.62 (66.5)	14 (35.6)
201A-6018	3/4 (19.05)	.438 (11.13)	20,000 (13794)	3.50 (88.9)	16 (405.6)
201A-6018	3/4 (19.05)	.516 (13.11)	15,000 (1034)	3.50 (88.9)	16 (40.6)
201A-6020	1 (25.4)	.438 (11.13)	43,000 (2965)	4.62 (117.3)	22 (55.8)
201A-6020	1 (25.4)	.562 (14.27)	20,000 (13794)	4.62 (117.3)	22 (55.8)
201A-6020	1 (25.4)	.688 (17.48)	15,000 (1034)	4.62 (117.3)	22 (55.8)

Annealed Parker Autoclave Engineeers pressure tubing may also be bent on HTB tube bender using bending shoe sizes specified above.

* HTB bending shoes are constructed of heat-treated aluminum alloy and designed specifically for use with Parker Autoclave Engineers' heavy wall stainless tubing. They are not intended for bending such components as commercial pipe. Because of diameter differences, such misuse could fracture the bending shoe.

** Information on bending 150,000 psi (10342 bar) tubing is included here for reference only. This tubing should not be bent on HTB hydraulic tube bender because of the 6” required minimum radius.

†† Pressure rating of the bent tube will be reduced. Consult the Technical Application section for pressure rating at various bend radii, or contact Technical Help department with tube OD, ID, and Bend Radius for assistance (IPDAETechnical@parker.com)

All dimensions for reference only and subject to change.

Tel: +45 63 12 83 00 | Email: ps@hymatik.com | www.hymatik.com | Hvidkaervej 27a, DK-5250 Odense SV, Denmark

Maintenance: Lubrication Guide

General Information

For reliable operation and long life of hand valves, air valves, relief valves, check valves and safety heads, Parker Autoclave Engineers strongly recommends proper lubrication of all components that are subject to friction during assembly and /or operation. This is especially important where metal to metal contact occurs such as on connection gland threads, packing gland threads and stem threads. Without proper lubrication, the high loads imposed on these threads may cause the parts to weld (or gall) together from the high metal to metal contact forces and friction heat. Lubrication is also essential for the effective sealing and long life of o-rings, especially those that are used in dynamic sealing applications. The performance of metal to metal seals will be improved with lubrication but, they do not absolutely require it.

Lubricant selection is strongly dependent on the application of the given component. Process fluids, fluid temperature, ambient environment temperature, materials and other factors are important in selecting a lubricant. This manual gives some basic guidelines in the proper selection and application of lubricants. The end user must ultimately determine the suitability of a lubricant based on process requirements.

Note: Parker Autoclave Engineers assumes no liability in selecting lubricant for customer applications.

Lubrication Sites

1. **Speedbite, Medium Pressure and High Pressure Connections in all valves and fittings** - Prior to assembly, the connection gland should be lubricated on the threads and on the area that is in contact with the sleeve or collar. Parker AE provides as standard a dry molybdenum disulfide lubricant on Speedbite glands unless specified otherwise. If process tolerable, a small amount of any lubricant (or process fluid) on the end of the tube cone or connection sleeve will help to maximize the metal-to-metal sealing process. This inherently provides for better sealing of gases.

2. **Hand Valves** - Ideally, the non-rotating stem should be lubricated along the shank that fits into the threaded stem sleeve as well as on the surfaces that are in contact with the stem washers. The threaded stem sleeve should be lubricated on the stem threads and at the ends (see Figure 1). The packing gland should be lubricated on the external threads and on the end that is in contact with the packing washer. For valves with replaceable seats, the external threads on the seat retainer and the portion of the seat retainer in contact with the seat should be lubricated.

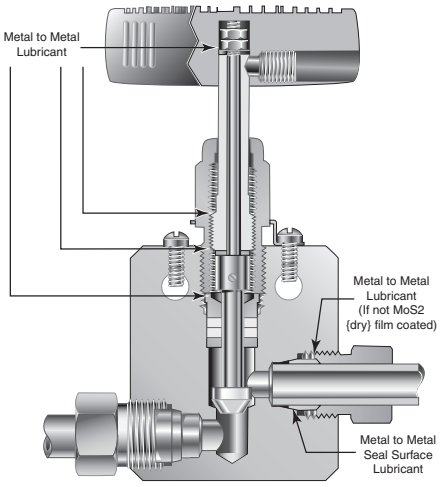

Figure 1
Hand Valve Lubrication Sites

3. **Air Valves** - The packing gland and seat retainer (if the valve has a replaceable seat) should be lubricated in the same manner as the hand valve. Threads should also be lubricated on all of the yoke screws (for yoke style valves) and on the retainer insert (on other air operated valves).

For piston type air operators, o-ring lubricant should be applied to the inside of the operator housing, on the center rod and on all the o-rings, on the pistons and divide plates.

4. **Check Valves** - The gland nut should be lubricated on the external threads and at the end where it contacts the cover. The cover should be lubricated at the sealing surface where it contacts the body. For o-ring check valves, a small amount of o-ring lubricant on the o-ring will help swell the elastomer and aid sealing. Refer to Figure 3 for lubrication sites on check valves.

Tel: +45 63 12 83 00 | Email: ps@hymatik.com | www.hymatik.com | Hvidkaervej 27a, DK-5250 Odense SV, Denmark

Maintenance: Lubrication Guide

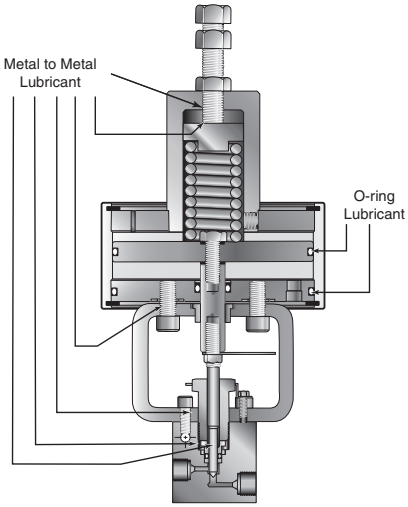

Figure 2
Air Valve Lubrication Sites

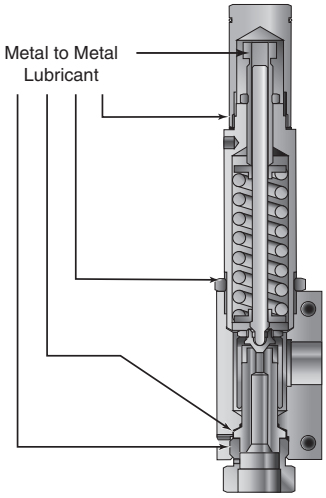

Figure 4
Relief Valve Lubrication Sites

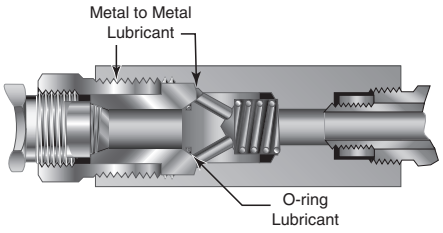

Figure 3
Check Valve Lubrication Sites

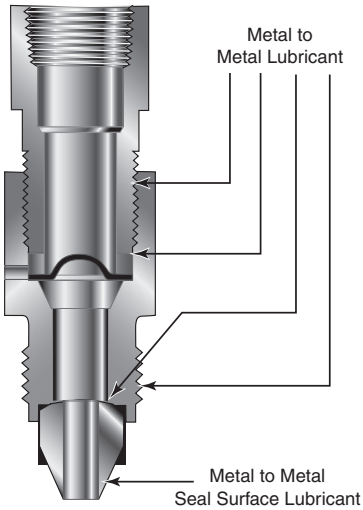

Figure 5
Safety Head and 2-Piece Male/Female Adapter
Lubrication Sites

5. **Relief Valves** - Threads should be lubricated on the cap, spring cylinder, adjustment bolt and on the seat gland. Refer to Figure 4 for lubrication sites on the relief valve.

6. **Safety Heads/2-Piece Male/Female Adapters** - The threads and end of the hold down nut in Safety Head should be lubricated. Refer to Figure 5 for lubrication sites on the safety head.

Tel: +45 63 12 83 00 | Email: ps@hymatik.com | www.hymatik.com | Hvidkaervej 27a, DK-5250 Odense SV, Denmark

Maintenance: Lubrication Guide

Parts that will move against each other during assembly or operation should be lubricated at the points/areas of contact.

Recommended Lubricants

Note: This information is provided for reference only. The manufacture of the lubricant should be contacted for specific information based on your application. Refer to the material safety data sheets for information on safe usage and storage methods for these lubricants.

1. **Jet Lube SS-30™** - This lubricant consists of pure copper flakes that are homogenized into a non-melting, nonvolatile viscous carrier. It is fortified with anti-oxidants, rust and corrosion inhibitors. Jet Lube SS-30 is the standard lubricant for Parker Autoclave VFT components with sliding metal to metal contact surfaces. The surfaces are copper coated and prevents seizure, galling and heat freeze. SS-30 comes in the form of a thick oil that can be easily brushed on the surfaces to be lubricated. The absolute service temperature range is from -65° to 1800°F (-55 to 982°C). Jet Lube SS-30 is not recommended for extreme low temperature applications or processes that will not tolerate the presence of copper.

2. **Jet Lube MP-50 Moly Paste** - This is a thick paste that contains molybdenum disulfide (MoS_2). This lubricant is suitable for preventing seizure and galling of parts at absolute temperatures of -300 to 750°F (-184 to 399°C). It is recommended for metal to metal components that are exposed to temperatures of less than 0°F. Other lubricants may solidify under these conditions and prevent the effective operation of dynamic components.

3. **DuPont Krytox 240AC** - Krytox is a non-flammable fluorinated grease used for metal to metal lubrication in valves that are cleaned and designated for oxygen service. It comes in the form of a white grease and has a recommended absolute service temperature range of -15 to 500°F (-26.1 to 260°C).

4. **Molykote® 55 O-ring Grease (See also DC 111) (Dow Corning)** - This grease is used for static lubrication between rubber and metal parts in actuators, ball valves and o-ring check valves. It is a silicone based lubricant and meets Military Specifications MIL-G-4343. It is not recommended for use on silicone rubber o-rings and seals. It has a recommended absolute service temperature range of -85 to 350°F (-65 to 177°C).

5. **Neolube DAG 156** - This is a dry film lubricant for valves used in Navy Nuclear service. It consists of graphite particles in a thermoplastic resin and ispropanol and meets Military Specification MIL-L-24131B. The dry film form allows tight control of impurities that are required for these applications. It has an absolute service temperature of -100 to 400°F.

6. **Lubriplate Pure Tac, NSF H-1 Registered, Extremely Tacky, Food Grade Greases** - This grease is used for dynamic lubrication between rubber and metal parts in pneumatic systems such as piston style air operators. A tacky, adhesive, highly water resistant grease for medium to slow dynamic speeds. It has a recommended absolute service temperature range of 0 to 350°F (-17.8 to 177°C).

7. **Klueber Lube - ISOFLEX TOPAS NB 52 - Synthetic Plain and Roller Bearing Grease** - This grease is used on all of our Air-Driven ASL, ACHL, AFL and AHL Liquid Pumps and is based on a synthetic hydrocarbon oil and barium complex soap. The special barium-soap thickener used offers good load-carrying capacity as well as resistance to water and ambient media. Shows good protection against corrosion as well as oxidation and ageing stability. ISOFLEX TOPAS NB 52 can be used in a wide service temperature range from -58° to 250°F (-50° to 120°C).

Maintenance: Lubrication Guide

Lubrication Selection Guide

Lubrication	Part Number	Application	Absolute Service Temperature Range
Jet-Lube SS-30	P-3580 (1 lb.) P-3580-8 (8 oz.)	Metal to Metal, Standard	-65°F to 1800°F (-18°C to 982°C)
Jet-Lube Moly Paste MP-50	1lb = P-9766	Metal to Metal, Low Temperature	-300°F to 750°F (-185°C to 398°C)
Krytox 240 AC	53893	Metal to Metal, Oxygen Clean Components	-15°F to 500°F (-26°C to 260°C)
MolyKote 55 Dow Corning	90085	O-ring and Packing Lubricant	-85°F to 350°F (-65°C to 177°C)
Neotube DAG 156	90406	Metal to Metal, Nuclear Service	-100°F to 400°F (-73°C to 204°C)
LubriPlate Pure Tac	P-9981	Food Service O-ring Lubricant	0°F to 350°F (-18°C to 177°C)
Klueber Lube	P-9822 (50g Tube)	Air-Driven Pump Sealing and Wear Surfaces	-58° to 250°F (-50° to 120°C) ISOFLEX TOPAS NB 52

Notes:

Specific applications may require other service temperature ranges.

[1]SS-30 and MP-50 Moly Paste are registered trademarks of Jet Lube Inc.

[2]Krytox is a registered trademark of E.I.duPont de Nemours & Co., Inc.

[3]DAG is a registered trademark of Acheson Industries, Inc.

[4]Molykote and Dow Corning are registered trademarks of Dow Corning Corp

[5]ISOFLEX TPOPAS NB 52 is a brand of Freudenberg SE

Tel: +45 63 12 83 00 | Email: ps@hymatik.com | www.hymatik.com | Hvidkaervej 27a, DK-5250 Odense SV, Denmark

VFT Lubrication Guide

Instrumentation Products Division

General Information:

For reliable operation and long life of hand valves, air valves, relief valves, check valves and safety heads, Autoclave Engineers strongly recommends proper lubrication of all components that are subject to friction dur-ing assembly and /or operation. This is especially important where metal to metal contact occurs such as on connection gland threads, pack-ing gland threads and stem threads. Without proper lubrication, the high loads imposed on these threads may cause the parts to weld (or gall) together from the high metal to metal contact forces and friction heat. Lubrication is also essential for the effective sealing and long life of o-rings, especially those that are used in dynamic sealing applications. The per-formance of metal to metal seals will be improved with lubrication but, they do not absolutely require it.

Lubricant selection is strongly dependent on the application of the given component. Process fluids, fluid tem-perature, ambient environment temperature, materials and other factors are important in selecting a lubricant. This manual gives some basic guidelines in the proper selection and application of lubricants. The end user must ultimately determine the suitability of a lubricant based on process requirements.

Note: Parker Autoclave Engineers assumes no liability in selecting lubricant for customer applications. Parker Autoclave Engineers reserves the right to alter the specifications given in this publication in line with our policy of continuous improvement. All general terms and conditions of sale, including limitations of our liability, apply to all products and services sold.

Caution: While testing has shown o-rings to provide satisfactory service life, both cyclic and shelf life may vary widely with differing service conditions, properties of reactants, pressure and temperature cycling, and age of the o-ring. Frequent inspection should be made to detect any deterioration and o-rings replaced as required.

Lubrication Sites:

1. **Speedbite, Slimline and High Pressure Connections in all valves and fittings**
   Prior to assembly, the connection gland should be lubri-cated on the threads and on the area that is in contact with the sleeve or collar. AE provides as standard a dry mo-lybdenum disulfide lubricant on Speedbite glands unless specified otherwise. If process tolerable, a small amount of any lubricant (or process fluid) on the end of the tube cone or connection sleeve will help to maximize the met-al-to-metal sealing process. This inherently provides for better sealing of gases.

2. **Hand Valves**
   Ideally, the non-rotating stem should be lubricated along the shank that fits into the threaded stem sleeve as well as on the surfaces that are in contact with the stem washers. The threaded stem sleeve should be lubricated on the stem threads and at the ends (**see Figure 1)**. The packing gland should be lubricated on the external threads and on the end that is in contact with the packing washer.
   For valves with replacement seats, the external threads on the seat retainer and the portion of the seat retainer in contact with the seat should be lubricated.

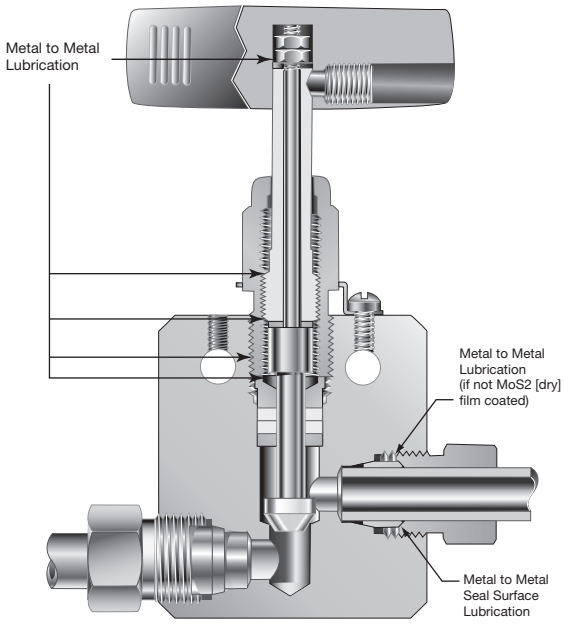

Figure 1
Hand Valve Lubrication Sites

3. Air Valves

The packing gland and seat retainer (if the valve has a replaceable seat) should be lubricated in the same manner as the hand valve. Threads should also be lubricated on all of the yoke screws (for yoke style valves) and on the retainer insert (on other air operated valves). For piston type air operators, o-ring lubricant should be applied to the inside of the operator housing, on the center rod and on all the o-rings, on the pistons and divider plates. On air-to-open diaphragm operators, the o-ring on the stem should be lubricated. The threads and end of the spring adjustment screw should be lubricated on all air-to-open valves. Refer to **Figure 2** for lubrication sites on piston style operators.

4. Check Valves

The gland nut should be lubricated on the external threads and at the end where it contacts the cover. The cover should be lubricated at the sealing surface where it contacts the body. For o-ring check valves, a small amount of o-ring lubricant on the o-ring will help swell the elas-tomer and aid sealing. Refer to **Figure 3** for lubrication sites on check valves.

5. Relief Valves

Threads should be lubricated on the cap, spring cylinder, adjustment bolt and on the seat gland. Refer to **Figure 4** for lubrication sites on the relief valve.

6. Safety Heads

The threads and end of the hold down nut should be lubricated. Refer to **Figure 5** for lubrication sites on the safety head.

For any part not covered in the above statements, the general rule is that parts that will move against each other during assembly or operation should be lubricated at the points/areas of contact.

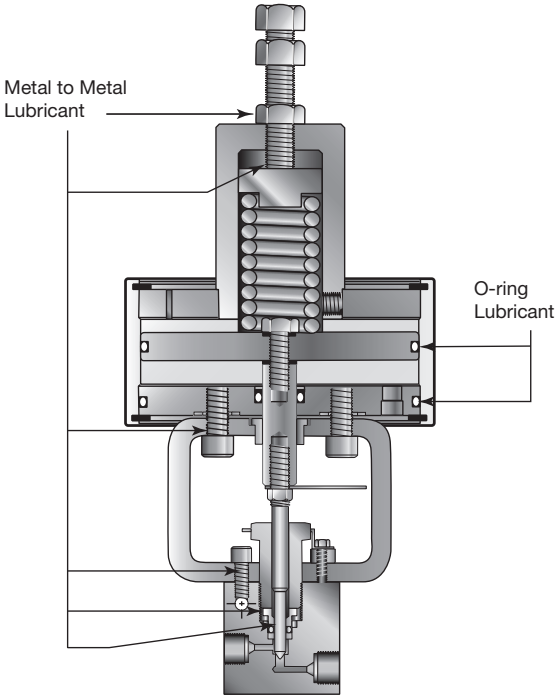

Figure 2

Air Valve Piston
Lubrication Sites

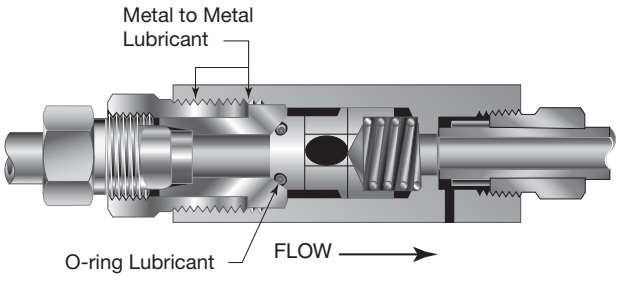

Figure 3

Check Valve
Lubrication Sites

Recommended Lubricants:

Note: This information is provided for reference only. The manufacture of the lubricant should be contacted for specific information based on your application. Refer to the material safety data sheets for information on safe usage and storage methods for these lubricants.

1. **DuPont Krytox 240AC2**
   Krytox is a non-flammable fluorinated grease used for metal to metallubrication in valves that are cleaned and designated for oxygen service. It comes in the form of a white grease and has a recommended absolute service temperature range of -15 to 500ºF.

2. **Hallocarbon 25-5S**
   This is a silica thickened chlorotrifluorethylene grease that is recommended for use on check valve balls and o-rings. *It is not recommended for use on magnesium and aluminum alloys and in contact with sodium potassium, amines, liquid flurine and liquid chlorine trifluoride.* It has a recommended absolute service temperature range of 0 to 350ºF.

3. **Neolube DAG 1563**
   This is a dry film lubricant for valves used in Navy Nuclear service. It consists of graphite particles in a thermoplastic resin and ispropanol and meets Military Specification MIL-L-24131B. The dry film form allows tight control of impurities that are required for these applications. It has an absolute service temperature of -100 to 400ºF.

4. **Dow Corning Molycoat 55M4**
   This grease is used for dynamic lubrication between rubber and metal parts in pneumatic systems such as piston style air operators. It is a silicone based lubricant and meets Military Specifications MIL-G-4343. *It is not recommended for use on silicone rubber o-rings and seals.* It has a recommended absolute service temperature range of -85 to 350ºF.

5. **Jet Lube SS-301**
   This lubricant consists of pure copper flakes that are homogenized into a non-melting, nonvolatile viscous carrier. It is fortified with anti-oxidants, rust and corrosion inhibitors. Jet Lube SS-30 is the standard lubricant for Parker Autoclave VFT components with sliding metal to metal contact surfaces. The surfaces are copper coated and prevents seizure, galling and heat freeze. SS-30 comes in the form of a thick oil that can be easily brushed on the surfaces to be lubricated. The absolute service temperature range is form 0 to 1800ºF. *Jet Lube SS-30 is not recommended for extreme low temperature applications or processes that will not tolerate the presence of copper.*

2. **Jet Lube MP-50 Moly Paste1**
   This is a thick paste that contains molybdenum disulfide (MoS). This lubricant is suitable for preventing seizure and galling of parts at absolute temperatures of -300ºF to 750ºF. It is recommended for metal to metal components that are exposed to temperatures of less than 0ºF. Other lubricants may solidify under these conditions and prevent the effective operation of dynamic components.

Services:

For service, contact the Parker Autocalve Engineers' Representative in you area, or Parker Autoclave Engineers' Customer Support Services at 1-800-458-0409 or email us at ipduscct@parker.com.

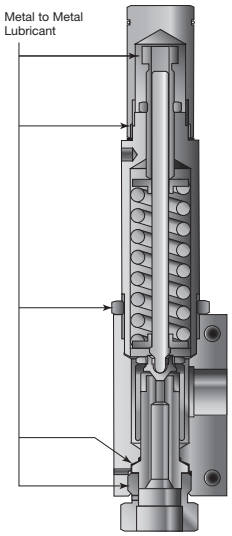

Figure 4

Relief Valve
Lubrication Sites

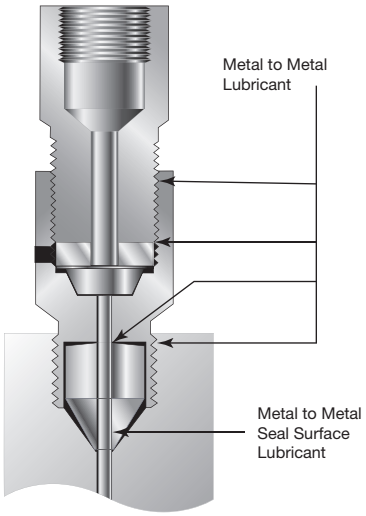

Figure 5

Safety Head
Lubrication Sites

Lubrication Service Chart:

Lubricant	Application	Absolute Service Temperature Range
Jet-Lube SS-30	Metal to Metal, Standard Application	0°F to 1800°F (-18°C to 982°C)
Jet-Lube Moly Paste MP-50	Metal to Metal, Low Temperature Application	-300°F to 750°F (-185°C to 398°C)
Krytox 240 AC	Metal to Metal, Oxygen Clean Components	-15°F to 500°F (-26°C to 260°C)
Hallocarbon 25-5S	Check Valve Ball and Poppet Lubricant	0°F to 350°F (-18°C to 177°C)
Neolube DAG156	Metal to Metal, Nuclear Service	-100°F to 400°F (-73°C to 204°C)
Dow Corning M55	Dynamic O-ring Seals	-85°F to 350°F (-65°C to 177°C)

Notes: Specific applications may require other service temperature ranges.

[1] SS-30 and MP-50 Moly Paste are registered trademarks of Jet Lube Inc.
[2] Krytox is a registered trademark of E.I.duPont de Nemours & Co., Inc.
[3] DAG is a registered trademark of Acheson Industries, Inc.
[4] Molycoat and Dow Corning are registered trademarks of Dow Corning Corp.

WARNING

FAILURE, IMPROPER SELECTION OR IMPROPER USE OF THE PRODUCTS AND/OR SYSTEMS DESCRIBED HEREIN OR RELATED ITEMS CAN CAUSE DEATH, PERSONAL INJURY AND PROPERTY DAMAGE.

This document and other information from Parker Hannifin Corporation, its subsidiaries and authorized distributors provide product and/or system options for further investigation by users having technical expertise. It is important that you analyze all aspects of your application and review the information concerning the product or system in the current product catalog. Due to the variety of operating conditions and applications for these products or systems, the user, through its own analysis and testing, is solely responsible for making the final selection of the products and systems and assuring that all performance, safety and warning requirements of the application are met. The products described herein, including without limitation, product features, specifications, designs, availability and pricing, are subject to change by Parker Hannifin Corporation and its subsidiaries at any time without notice.

©2021 Parker Hannifin Corporation | Autoclave Engineers is a registered trademark of the Parker Hannifin Corporation

Literature #: 02-0027BE April 2021

Instrumentation Products Division
Autoclave Engineers Operation
8325 Hessinger Drive
Erie, PA 16509-4679
Tel: 814 860 5700
Fax: 814 860 5811
www.autoclave.com
www.parker.com/ipd

Instrumentation Products Division
Division Headquarters
1005 A Cleaner Way
Huntsville, AL 35805 USA
Tel: 256 881 2040
Fax: 256 881 5072

Parker Hannifin Manufacturing Ltd.
Instrumentation Products Division,
Europe
Riverside Road
Pottington Business Park
Barnstaple, UK, EX31 1NP, UK
Tel: 44 1271 313131
Fax: 44 1271 373636

ISO-9001 Certified

Tel: +45 63 12 83 00 | Email: ps@hymatik.com | www.hymatik.com | Hvidkaervej 27a, DK-5250 Odense SV, Denmark

technical information

Note: *New Technical Information Section coming soon.*

Technical Information

The information presented in this section is intended to assist designers in the proper selection of Parker Autoclave Engineers' valves, fittings and tubing for fluid handling systems. This technical data does not represent product specifications but rather guidelines for direction in the proper application of the referenced equipment. These guidelines are general in nature because of the many process variables.

For severe service applications, selection of the appropriate valves, fittings and tubing is essential in order to optimize the service life of these products. Parker Autoclave Engineers' technical staff is available to assist in the interpretation of this information.





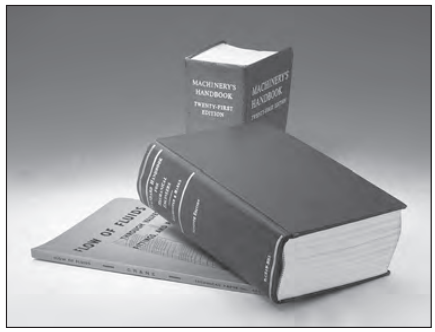

Parker

Autoclave Engineers

www.autoclave.com

Technical Information

Technical Information - General Information

Technical and Application Information

Materials:

Widely varying conditions frequently require that valves, fittings and tubing be constructed of materials other than conventional stainless steel. Since many variables affect the corrosion resistance of metallic materials, it is Parker Autoclave Engineers' policy not to recommend materials based on corrosion resistance for specific fluid applications. We can, however, suggest materials based on mechanical strength and also indicate materials generally used in a specific application. Other materials not listed in this section are also available.

Pressure:

Included in this section are the standard pressure ratings for several common materials for valves and fittings as well as tubing. Parker Autoclave Engineers stocks a select quantity of special material tubing for immediate delivery.

Temperature:

Also contained in this section are pressure reduction factors at various temperatures for several materials. To obtain the maximum pressure rating at an elevated temperature, multiply the maximum pressure rating of the item at room temperature by the elevated temperature factor (% of RT).

High and low temperatures or high heat up and/or cool down rates can affect the capability of a metal-to-metal seal. When selecting a valve series, consideration should not only be given to static pressure rating, but also static and dynamic temperature conditions. Generally, the smaller the seal diameter of a metal-to-metal seal, the more reliable the seal will be.

Gas or Liquid Service:

Light gases such as hydrogen and helium are more difficult to seal than liquids. When selecting a valve series, consideration should be given to the fluid application and not just pressure and temperature requirements. The higher the rating of the valve or fitting, the less the likelihood of weepage problems with light gases. Tubing selections should also consider the service requirements, since thicker wall, smaller outside diameter tube sizes will produce a more reliable connection seal. Handling of fittings and tubing during installation will make a difference in sealability of light gases as well as liquids. Do not handle the tube or fitting in such a way as to damage the sealing surfaces. If it is process tolerable, a small amount of lubrication (or even process fluid) on the seal area during installation will help the sealing process. Refer to the Tools, Installation, Operation and Maintenance section for further information.

Valve Stem Packing Materials:

The considerations listed thus far should be applied when selecting a suitable valve stem packing material (PTFE, PTFE glass or Graphite yarn). Where possible, PTFE packing is the most reliable, low maintenance, packing choice; PTFE/glass is the second. While graphite yarn packing is a reliable packing material for the majority of extremely high temperature applications, some gases may permeate more readily through graphite yarn packing than through the PTFE packing in a valve with an extended stuffing box. The packing material must be kept below the maximum permitted temperature listed on page 5.

Valve Stem Seating:

Abrasive flow or high cycle service will require more frequent maintenance. Special materials and the proper valve series selection may extend service life. For example, if flow is not critical, a 30VM valve with an **N-Dura** stem will require less maintenance than an SW series valve used in a low pressure, high cycle, abrasive flow application. Although all application parameters cannot be considered in this section, the user can generally expect several thousand cycles in a liquid application and several hundred cycles for gas service. The packing gland may require adjustment, however, to achieve these results.

Pressure Cycling:

In medium and high pressure applications, static as well as dynamic (cyclic) pressure must be considered when selecting an appropriate valve series. If fatigue life is a concern, Parker Autoclave Engineers can supply tubing which has been autofrettaged for improved fatigue resistance. For internally pressurized tubing, **autofrettaging** is a method by which the inner wall of the tube is precompressed to reduce the tube operating bore stresses. By applying sufficient internal pressure, greater than the maximum working pressure of the tube, the inner wall is plastically deformed by a controlled amount. The remaining outer portion of the wall acts elastically, and when the pressure is released, a positive compressive load at the bore will exist. As mentioned previously, the result is reduced bore stress and increased fatigue life. In addition to the autofrettaging method to increase cycle life, Parker Autoclave Engineers offers HP-HC (high-pressure — high cycle) tubing, rated to 100,000 psi (6895 bar). This tubing can be substituted for our standard 60,000 psi (4137 bar) tubing providing longer life at 60,000 psi (4137 bar) operation.

Vacuum Service:

The high, medium and low pressure series of Parker Autoclave Engineers' standard valves, fittings and tubing can be used in light vacuum services to 10^{-2} torr. For high vacuums to 10^{-5} or 10^{-6} torr, Parker Autoclave Engineers' high pressure series is recommended. Extreme care and proper seal lubrication is required (as mentioned in the Gas or Liquid Service paragraph) to achieve these degrees of vacuum. The pump type and size will determine the final vacuum pressure.

All general terms and conditions of sale, including limitations of our liability, apply to all products and services sold.

Technical Information - Coned & Threaded Connections

Parker Autoclave Engineers Medium & High Pressure Coned and Threaded Connections

Parker Autoclave Engineers' Medium Pressure Coned and Threaded Connections

Features:

- Pressures to 20,000 psi (1379 bar)
- Uncompromised reliability under rigorous thermal and pressure cycling.
- Design is a more compact version of the original Parker Autoclave Engineers High Pressure connections.
- Well suited to installations which require repeated assembly and disassembly with consistent reliability.
- Available in tube outside diameter sizes from 1/4"(6.35 mm) through 1-1/2" (38.10 mm) and bore sizes from .109"(2.77 mm) to .938"(23.83 mm).

Note: 1" 43,000 psi (2965 bar) utilizes the medium pressure coned and threaded connection.

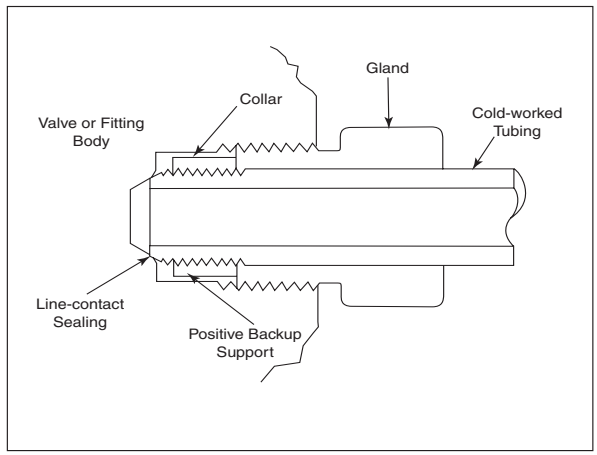

Differences in angles exaggerated for clarity.

Parker Autoclave Engineers' High Pressure Coned and Threaded Connections

Features:

- Pressures to 60,000 psi (4137 bar)
- Increased pressure handling capabilities
- Uncompromised reliability under rigorous thermal and pressure cycling
- Well suited to installations which require repeated assembly and disassembly with consistent reliability.
- Available in tube outside diameter sizes of 1/4" (6.35mm), 3/8"(9.53mm) and 9/16"(14.27mm) and bore sizes of .083(2.11mm), .125"(3.18mm), .188"(4.78mm) and .250"(6.35mm).

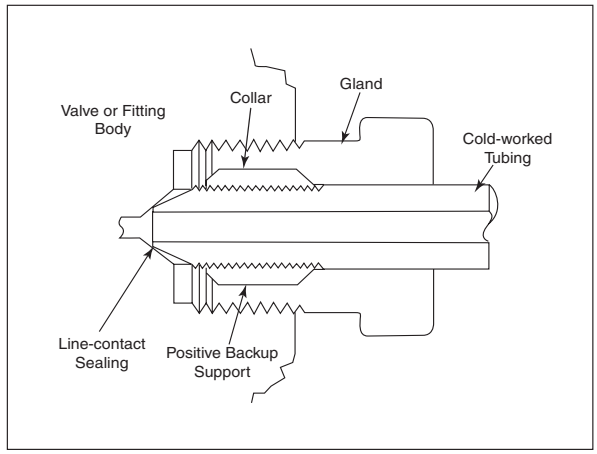

Differences in angles exaggerated for clarity.

All general terms and conditions of sale, including limitations of our liability, apply to all products and services sold.

Technical Information - Coned and Threaded Connections

Design Considerations - Why Coning and threading?

High-pressure designs require a superior joining technique for valves, fitting and tubing. Conventional joining methods fall short of the reliability needed for pressures above 10,000 - 15,000 psi (690-1034 bar) and tube sizes above 1/4" outside diameter. Dissimilar angles between the body and the tube cone provide line contact sealing along the perimeter of a contact circle. The sealing contact area is therefore, maintained at its practical minimum for the given tube size and a reliable seal is produced due to high sealing stresses that occur at low sealing loads. When process tolerable, a small amount of lubricant (or even process fluid) on the seal area will help improve the reliability of the metal to metal seals, especially when light molecule gases are to be sealed. The metal to metal seal also eliminates the need for elastomers in the connections.

Positive backup support occurs with the collar threaded (left-handed) directly onto the tubing to form a positive integral retaining surface. This allows for a consistent connection make up that is required at higher pressures and temperatures. When the gland nut is threaded into the connection, the tubing is locked securely in place and the possibility for the ejection of the tubing from a properly assembled and used connection is extremely remote.

Remarks:

Since the glands and threaded collars can be removed from the tubing, properly lubricated Parker Autoclave Engineers Medium-Pressure and High-Pressure connections can be disassembled and reassembled repeatedly without loss of relability. These connections are used with cold-worked valve and fitting bodies which can withstand many repeated sealings. Therefore, valves, fittings and accessories can be inserted or removed from the pressure system or the system can be altered or expanded in a fraction of the time and cost that may be imposed by welded, screwed, flared or other types of connections.

Vacuum Service:

Parker Autoclave Engineers' Medium-Pressure connections can be reliably used in light vacuum service to 10^{-2} torr. Parker Autocalve Engineers' High-Pressure connections are recommended for vacuum to 10^{-5} torr. Extreme care and proper seal lubrication are required to successfully achieve these levels of vacuum.

Pressure Cycling:

Since the metal to metal seal is pre-torqued to a specified value greater than the end load generated from the pressure, fatigue concerns of the connection due to pressure cycling are minimal.

Thermal Cycling:

Because of the threaded on collar design, Parker Autoclave Engineers' Medium and High-Pressure connections can take repeated thermal cycling under pressure with no loss in reliability. These connections can also handle a wider range of temperatures than swaged or bite type connections and are designed to maintain integrity from -423°F to 1200°F (-252°C to 649°C).

Pre-Rated Systems:

Valves, fittings and tubing with Parker Autoclave Engineers' Medium and High-Pressure connections provide a fully engineered, pre-rated system of components that are interchangeable from assembly to assembly. They are not over sensitive to abuse or careless assembly and no special gauges or tools are needed to check the connection. Weep holes are provided in every connection to permit fast visual inspection for leakage, and prevent pressure build up in the threads.

Materials:

Parker Autoclave Engineers' standard gland and collar material is type 316 cold-worked stainless steel. This material provides high strength and good impact resistance over the temperature range mentioned above. A bonded dry film lubricant, to be used as an anti-galling agent, is available.

Pipe Thread Information

In some applications pipe threads may be preferred in place of standard Parker Autoclave Engineers connections. Pipe threads for pressure seals are tapered or combination of taper and straight. A number of factors apply to pipe threads for high-pressure sealing. Thread form or the quality of the thread, which refers to the gauging or thread dimensions. Another is the actual machining of the thread producing the required finish to prevent thread galling.
Pipe threads can be used up to 15,000 psi (1034 bar) safely if proper installation procedures are followed. The following should be adhered to when using pipe threads.

NOTE: NPT (Pipe) connections

- NPT threads must be sealed using a high quality PTFE tape and/or PTFE paste product. Refer to thread sealant manufacturer's instructions on how to apply thread sealant.
- Sealing performance may vary based on many factors such as pressure, temperature, media, thread quality, thread material, proper thread engagement and proper use of thread sealant.
- Customer should limit the number of times an NPT fitting is assembled and disassembled because thread deformation during assembly will result in deteriorating seal quality over time. When using only PTFE tape, consider using thread lubrication to prevent galling of mating parts.

Temperature limitations for pipe threads are based on material strength and thread sealant. Parker Autoclave Engineers limits it's pipe thread components to 0°F (17.8°C) to 400°F (204°C) and pressures as stated in the components sections.

All general terms and conditions of sale, including limitations of our liability, apply to all products and services sold.

Technical Information – Pressure/Temperature Rating Guide

Pressure/temperature Rating Guide

Information in this rating guide is furnished to approximate the pressure/temperature capabilities of Parker Autoclave Engineers valves and fittings with various options.

To determine approximate ratings, the following factors should be considered:

- Refer to valve or fitting ordering pages for the base pressure rating of component at room temperature (R.T.).
- Refer to Technical Information section for pressure ratings of materials at elevated temperatures.
- Refer to appropriate tubing section for pressure ratings of standard Parker Autoclave Engineers' tubing at various temperatures to 800°F (427°C).
- Note maximum temperature ratings for Parker Autoclave Engineers' valves with various packing and stem options in table below.
- Note pressure/temperature curve on page 6 for type 316 stainless steel bodies and tubing.
- Note temperature information checklist on page 6.

Valve Series	Stem Type	Packing Temperature °F (°C)														
		Standard PTFE Packing		Optional PTFE Glass -TG		Optional PTFE with Cryogenic Trim -B		Optional Graphite Yarn -GY		Standard Nylon-Leather		Optional Peek-PTFE Glass - TG		Optional Peek-PTFE with Cryogenic Trim -B		Optional Extended Stuffing Box
		Min	Max	Min	Max	Min	Max	Min	Max	Min	Max	Min	Max	Min	Max	
10V	Vee or Reg., Metal-to-Metal	0 (-17.8)	450 (232)	0 (-17.8)	600 (316)	-100 (-73)	600 (316)	0 (-17.8)	650 (343)	N/A	N/A	N/A	N/A	N/A	N/A	See Page 2 of Extreme Temperature Series Needle Valve for information on extended stuffing box.
SW	Vee or Reg., Metal-to-Metal	0 (-17.8)	450 (232)	0 (-17.8)	600 (316)	-100 (-73)	600 (316)	0 (-17.8)	650 (343)	N/A	N/A	N/A	N/A	N/A	N/A	
15SM 20SM	Vee or Reg., Metal-to-Metal	0 (-17.8)	450 (232)	0 (-17.8)	600 (316)	-100 (-73)	600 (316)	0 (-17.8)	800 (427)	N/A	N/A	N/A	N/A	N/A	N/A	
30SC	Vee or Reg., Metal-to-Metal	0 (-17.8)	450 (232)	0 (-17.8)	600 (316)	-100 (-73)	600 (316)	0 (-17.8)	800 (427)	N/A	N/A	N/A	N/A	N/A	N/A	
30VM	Vee or Reg., Metal-to-Metal	0 (-17.8)	450 (232)	0 (-17.8)	600 (316)	-100 (-73)	600 (316)	0 (-17.8)	800 (427)	N/A	N/A	N/A	N/A	N/A	N/A	
40VM	Vee or Reg., Metal-to-Metal	N/A	N/A	N/A	N/A	N/A	N/A	0 (-17.8)	800 (427)	40 (4.4)	230 (110)	0 (-17.8)	600 (316)	-100 (-73)	600 (316)	
60VM	Vee or Reg., Metal-to-Metal	N/A	N/A	N/A	N/A	N/A	N/A	0 (-17.8)	800 (427)	40 (4.4)	230 (110)	0 (-17.8)	600 (316)	-100 (-73)	600 (316)	
100VM	Vee, Metal-to-Metal	N/A	N/A	N/A	N/A	N/A	N/A	0 (-17.8)	800 (427)	40 (4.4)	230 (110)	0 (-17.8)	600 (316)	-100 (-73)	600 (316)	
15Y	Vee or Reg., Metal-to-Metal	0 (-17.8)	450 (232)	0 (-17.8)	600 (316)	-100 (-73)	600 (316)	0 (-17.8)	800 (427)	N/A	N/A	N/A	N/A	N/A	N/A	
50Y	Vee or Reg., Metal-to-Metal	0 (-17.8)	450 (232)	0 (-17.8)	600 (316)	-100 (-73)	600 (316)	0 (-17.8)	800 (427)	N/A	N/A	N/A	N/A	N/A	N/A	
10VRMM	Micrometering	0 (-17.8)	450 (232)	0 (-17.8)	600 (316)	-100 (-73)	600 (316)	0 (-17.8)	800 (427)	N/A	N/A	N/A	N/A	N/A	N/A	
30VRMM	Micrometering	0 (-17.8)	450 (232)	0 (-17.8)	600 (316)	-100 (-73)	600 (316)	0 (-17.8)	800 (427)	N/A	N/A	N/A	N/A	N/A	N/A	
60VRMM	Micrometering	N/A	N/A	N/A	N/A	N/A	N/A	0 (-17.8)	800 (427)	40 (4.4)	230 (110)	0 (-17.8)	600 (316)	-100 (-73)	600 (316)	

Caution: While testing has shown O-rings to provide satisfactory service life, both cyclic and shelf life may vary widely with differing service conditions, properties of reactants, pressure and temperature cycling and age of the O-ring. FREQUENT INSPECTION SHOULD BE MADE to detect any deterioration, and O-rings replaced as required.

Note:
1. Optional graphite-yarn packing not recommended for hydrogen or helium service.
2. 40VM, 60VM and 60VRMM valves use Peak/PTFE/Peak for the PTFE glass option.
3. Compression sleeve-type connections such as Parker Autoclave Engineers' SpeedBite or other swaged or bite-type connections are not recommended for service above 650°F (343°C) or below 0°F (-17.8°C). For such applications, Parker Autoclave Engineers recommends its medium pressure components with Parker Autoclave Engineers Medium Pressure coned-and -threaded connections, offering excellent thermal cycling capability.
4. Pressure Limitations: Consult factory on 3/4 and 1 inch sizes.

All general terms and conditions of sale, including limitations of our liability, apply to all products and services sold.

Pressure/Temperature Rating Curve: 316 SS & 304 SS

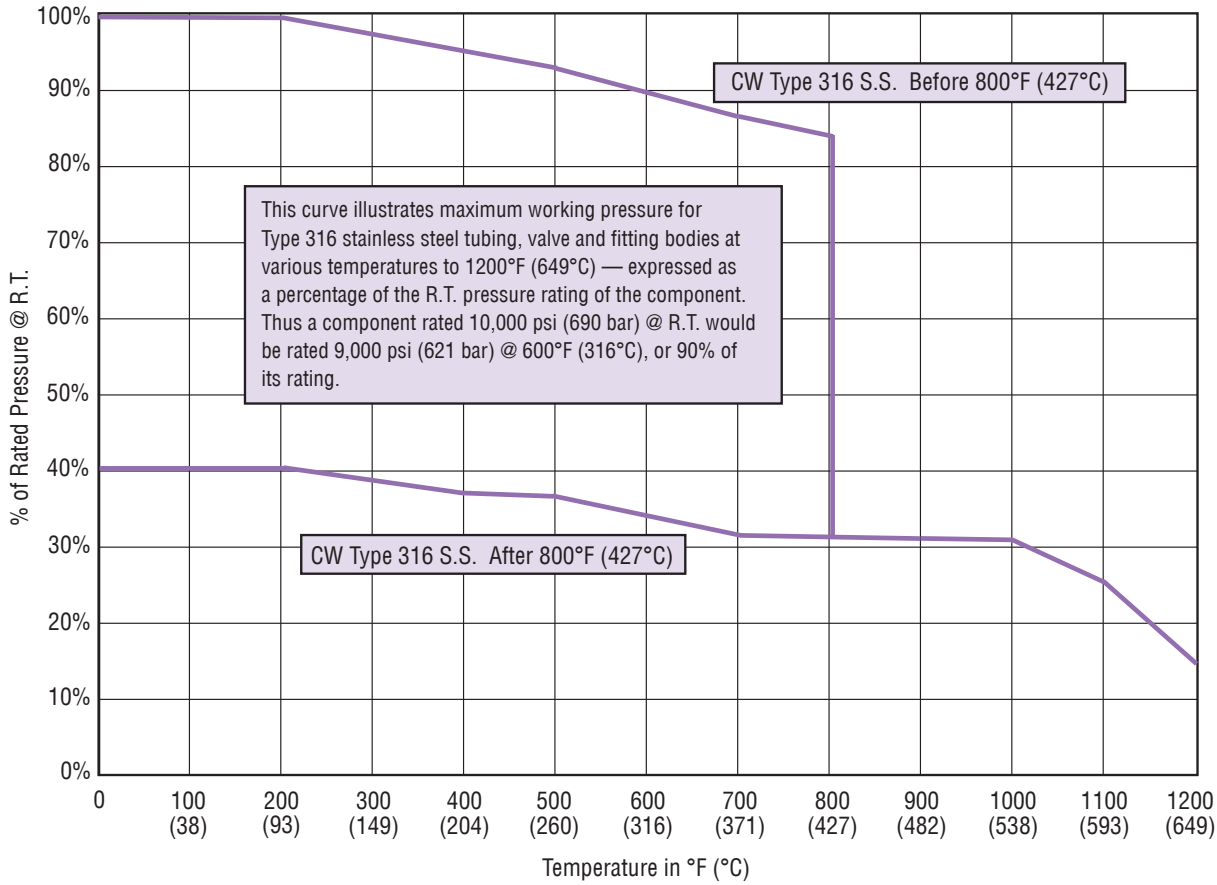

Note:

Curves and ratings presented here are average values for reference only, and can be significantly affected by pressure and temperature characteristics of trim and packing materials. For unusual pressure/temperature requirements, please consult factory for recommended body, trim and packing specifications.

For pressure temperature information on components supplied in materials other than Type 316 stainless steel, refer to pages 9-10.

* Curve is valid for cold-worked Type 316 stainless steel components as long as operating temperature does not exceed 800°F (427°C). When exceeding this temperature, the cold worked effect is PERMANENTLY altered, and the components should be considered as annealed material, using 40% of its cold-worked rating for future operation of the components.

Temperature Information Checklist

	-423° to -100°F **(-253° to -73°C)**	-100° to -0°F **(-73° to -1.78°C)**	0° to 650°F **(-17.8° to 343°C)**	650° to 800°F **(343° to 427°C)**	800° to 1200°F **(427° to 649°C)**
Compression Type Connections	Not Recommended	Not Recommended	Recommended	Not Recommended	Not Recommended
Compression Type Connections with -B Option	Not Recommended	Recommended	Not Required	Not Required	Not Required
Coned and Threaded Connections	Required	Not Recommended	Recommended	Required	Required
Coned and Threaded Connections with -B Option	Not Recommended	Recommended	Not Required	Not Required	Not Required
Extended Stuffing Box	Required (PTFE Packing)*	May Be Required**	May Be Required**	May Be Required**	Required (Graphite Yarn Packing)*

† Packing temperature not to exceed 800°F (427°C)
* Packing temperature not to go below -100°F (-73°C)

** Extended stuffing box required for operation below -100°F (-73°C) and above 450°F (232°C) (with PTFE packing) or 600°F (316°C) (with PTFE glass packing).

For prompt service, Parker Autoclave Engineers stocks select products. Consult factory.

All general terms and conditions of sale, including limitations of our liability, apply to all products and services sold.

Technical Information - Material vs. Pressure Rating

Parker Autocalve Engineers Valves, Fittings and Tubing

Valves & Fittings

Valves Series	Connection Type	Tube Size (in)	Material vs. Pressure Rating - PSI (bar) @ room Temperature*									
			316CW (Std.)	Hastelloy C276	Inconel 600	Inconel 625	Incoloy 825	Duplex 2205	Duplex 2507	Monel 400	Titanium Gr2	25-4SMO
10V	W125	1/8	15,000 (1034)	11,000 (758)	11,000 (758)	11,000 (758)	11,000 (758)			9,900 (683)	7,500 (517)	
	W250	1/4	15,000 (1034)	11,500 (793)	11,500 (793)	11,500 (793)	11,500 (793)			9,900 (683)	7,500 (517)	
	W375	3/8	15,000 (1034)	7,500 (517)	7,500 (517)	7,500 (517)	7,500 (517)			6,300 (434)	4,800 (331)	
	SW500	1/2	10,000 (690)	5,500 (379)	5,500 (379)	5,500 (379)	5,500 (379)			4,600 (317)	3,400 (234)	
SW	SW250	1/4	15,000 (1034)	9,600 (662)	7,500 (517)	12,500 (862)	7,500 (517)			6,300 (434)	4,800 (331)	
	SW375	3/8	15,000 (1034)	7,500 (517)	7,500 (517)	7,500 (517)	7,500 (517)			6,300 (434)	4,800 (331)	
	SW500	1/2	10,000 (690)	5,500 (379)	5,500 (379)	5,500 (379)	5,500 (379)			4,600 (317)	3,400 (234)	
15SM	SF562CX10	9/16	15,000 (1034)	10,000 (690)	9,300 (641)	10,000 (690)	9,300 (641)	10,000 (690)	15,000 (1034)	6,600 (455)	6,600 (455)	10,000 (690)
	SF750CX10	3/4	15,000 (1034)	10,000 (690)	9,300 (641)	10,000 (690)	9,300 (641)	10,000 (690)	15,000 (1034)	6,600 (455)	6,600 (455)	10,000 (690)
	SF1000CX10	1	15,000 (1034)	10,000 (690)	9,300 (641)	10,000 (690)	9,300 (641)	10,000 (690)	15,000 (1034)	6,600 (455)	6,600 (455)	10,000 (690)
	SF1500CX	1-1/2	15,000 (1034)			10,000 (690)	8,000 (552)	10,000 (690)	15,000 (1034)			10,000 (690)
20SM	SF250CX	1/4	20,000 (1379)	12,200 (841)	9,300 (641)	15,000 (1034)	9,300 (641)	15,000 (1034)	20,000 (1379)	6,600 (455)	6,600 (455)	12,000 (827)
	SF375CX	3/8	20,000 (1379)	12,200 (841)	9,300 (641)	15,000 (1034)	9,300 (641)	15,000 (1034)	20,000 (1379)	6,600 (455)	6,600 (455)	12,000 (827)
	SF562CX20	9/16	20,000 (1379)	12,200 (841)		15,000 (1034)		15,000 (1034)	20,000 (1379)		6,600 (455)	12,000 (827)
	SF750CX20	3/4	20,000 (1379)	12,200 (841)		15,000 (1034)		15,000 (1034)	20,000 (1379)			12,000 (827)
	SF1000CX20	1	20,000 (1379)	12,200 (841)		15,000 (1034)		15,000 (1034)	20,000 (1379)			12,000 (827)
30SC	F1000C43	1	30,000 (2068)			26,000 (1793)	15,000 (1034)	28,000 (1931)	30,000 (2068)			19,000 (1310)
43SC	F1000C43	1	43,000 (2965)			27,000 (1862)	15,000 (1034)	29,000 (2000)	39,000 (2689)			21,000 (1448)
40SC	40F562C-312	9/16	40,000 (2758)									
30VM	F250C	1/4	30,000 (2068)	22,400 (1544)	17,300 (1193)	22,500 (1551)	16,500 (1138)	22,500 (1551)	30,000 (2068)	13,000 (896)	15,200 (1048)	20,000 (1379)
	F375C	3/8	30,000 (2068)	22,400 (1544)	17,300 (1193)	22,500 (1551)	16,500 (1138)	22,500 (1551)	30,000 (2068)	13,000 (896)	15,200 (1048)	20,000 (1379)
	F562C	9/16	30,000 (2068)	22,400 (1544)	17,300 (1193)	22,500 (1551)	16,500 (1138)	22,500 (1551)	30,000 (2068)	13,000 (896)	15,200 (1048)	20,000 (1379)
40VM	F562C40	9/16	40,000 (2758)	23,000 (1586)	18,400 (1269)	26,000 (1793)	15,000 (1034)	28,000 (1931)	38,000 (2620)	13,800 (951)	16,200 (1117)	21,000 (1448)
60VM	F250C	1/4	60,000 (4137)	35,900 (2475)	27,700 (1910)	35,900 (2475)	20,000 (1379)	38,000 (2620)	52,000 (3585)	20,800 (1434)	24,300 (1675)	28,500 (1965)
	F375C	3/8	60,000 (4137)	35,900 (2475)	27,700 (1910)	35,900 (2475)	20,000 (1379)	38,000 (2620)	52,000 (3585)	20,800 (1434)	24,300 (1675)	28,500 (1965)
	F562C	9/16	60,000 (4137)	35,900 (2475)	27,700 (1910)	35,900 (2475)	20,000 (1379)	38,000 (2620)	52,000 (3585)	20,800 (1434)	24,300 (1675)	28,500 (1965)

* For ratings at elevated temperatures see P/T Rating Curves on pages 9 and 10.
Use 10SM Series

Note: Hastelloy C276 values for SW are based on the valve ratings.

Tubing, connection type and/or packing material may limit maximum temperature rating. See pages 5 and 6 for further temperature limitations.

Tubing (Seamless) - Low Pressure**

Valve Series	Tubing Size Outside x Inside Diameter Inches (mm)	Material vs. Pressure Rating psi (bar) @ Room Temperature ††*						
		316ANLD	Hastelloy C276	Inconel 600	Inconel 625	Monel 400	Nickel 200	Titanium Gr2
Low Pressure	1/16 x 0.026 **(1.59 x 0.66)**	15,000 **(1034.20)**	15,000 **(1034.20)**	15,000 **(1034.20)**	15,000 **(1034.20)**	11,500 **(792.88)**	7,100 **(489.52**	11,500 **(792.88**
	1/8 x 0.052 **(3.19 x 1.32)**	15,000 **(1034.20)**	15,000 **(1034.20)**	15,000 **(1034.20)**	15,000 **(1034.20)**	12,000 **(827.36)**	7,200 **(496.41)**	12,000 **(827.36)**
	1/8 x 0.062 **(3.19 x 1.57)**	11,650 **(803.23)**	14,000 **(965)**	11,000 **(758.41)**	11,650 **(803.23)**	9,900 **(682.57)**	6,000 **(413.68)**	7,500 **(517.10)**
	1/8 x 0.069 **(3.19 x 1.75)**	9,950 **(686.02)**	11,000 **(758.41)**	10,600 **(730.83)**	11,500 **(792.88)**	9,300 **(641.26)**	5,300 **(365.42)**	6,650 **(458.49)**
	1/8 x 0.085 **(3.19 x 2.16)**	6,850 **(472.28)**	7,750 **(534.34)**	7,300 **(503.31)**	10,000 **(689.46)**	6,400 **(441.26)**	3,650 **(251.65)**	4,450 **(306.81)**
	1/4 x 0.125 **(6.35 x 3.18)**	11,650 **(803.23)**	11,500 **(792.88)**	11,500 **(792.88)**	12,500 **(861.83)**	9,900 **(682.57)**	6,000 **(413.68)**	7,500 **(517.10)**
	1/4 x 0.180 **(6.35 x 4.57)**	5,450 **(375.76)**	6,650 **(458.49)**	6,300 **(434.36)**	9,000 **(620.52)**	5,500 **(379.21)**	3,150 **(217.18)**	3,900 **(268.89)**
	1/4 x 0.194 **(6.35 x 4.93)**	4,600 **(317.15)**	5,200 **(358.52)**	4,900 **(337.84)**	7,200 **(496.41)**	4,300 **(296.47)**	2,450 **(168.92)**	3,050 **(210.29)**

Tubing (Seamless) - Low Pressure, continued on page 8

†† The tubing pressure rating in some instances is lower than the rating of the valve and fitting. Tubing connection type and/or packing material may limit maximum temperature rating. See pages 5 & 6 for further temperature limitations.

* For ratings at elevated temperatures see P/T Rating Curves on pages 9 & 10.
** Except Hastelloy C276 which is welded and drawn or seamless.

All general terms and conditions of sale, including limitations of our liability, apply to all products and services sold.

Tubing (Seamless) - Low Pressure** - continued

Valve Series	Tubing Size Outside x Inside Diameter Inches (mm)	Material vs. Pressure Rating psi (bar) @ Room Temperature ††*						
		316ANLD	Hastelloy C276	Inconel 600	Inconel 625	Monel 400	Nickel 200	Titanium Gr2
Low Pressure	3/8 x 0.195 **(9.53 x 4.95)**	10,000 **(689.46)**	10,000 **(689.46)**	10,000 **(689.46)**	7,500 **(517.10)**	8,800 **(606.73)**	5,300 **(365.42)**	6,600 **(455.05)**
	3/8 x 0.250 **(9.53 x 6.35)**	7,500 **(517.10)**	7,500 **517.10)**	7,500 **(517.10)**	7,500 **(517.10)**	6,300 **(434.36)**	3,800 **(262.00)**	4,800 **(330.94)**
	3/8 x 0.277 **(9.53 x 7.04)**	5,450 **(375.76)**	6,150 **(424.02)**	5,800 **(399.89)**	7,500 **(517.10)**	5,100 **(351.63)**	2,900 **(199.942)**	3,600 **(248.21)**
	3/8 x 0.305 **(9.53 x 7.75)**	3,800 **(262.00)**	4,250 **(293.02)**	4,000 **(275.79)**	5,000 **(344.73)**	3,500 **(241.31)**	2,100 **(144.79)**	2,500 **(172.37)**
	1/2 x 0.270 **(12.70 x 6.86)**	10,000 **(689.46)**	N/A	N/A	N/A	N/A	N/A	N/A
	1/2 x 0.375 **(12.70 x 9.53)**	5,500 **(379.21)**	5,500 **(379.21)**	5,500 **(379.21)**	5,500 **(379.21)**	4,600 **(317.15)**	2,700 **(186.16)**	3,450 **(237.87)**
	1/2 x 0.402 **(12.70 x 10.21)**	4,000 **(275.79)**	4,500 **(310.26)**	4,250 **(293.02)**	5,000 **(344.73)**	3,700 **(255.10)**	2,100 **(144.79)**	2,650 **(182.71)**

†† The tubing pressure rating in some instances is lower than the rating of the valve and fitting. Tubing connection type and/or packing material may limit maximum temperature rating. See pages 5 & 6 for further temperature limitations.

* For ratings at elevated temperatures see P/T Rating Curves on pages 9 & 10.
** Except Hastelloy C276 which is welded and drawn or seamless.

Tubing (Seamless) - Medium Pressure

Tubing Series	Tubing Size Outside x Inside Diameter inches (mm)	Material vs. Pressure Rating - PSI (bar) @ room Temperature††*										
		316CW	317CW	Hastelloy C276	Inconel 600	Inconel 625	Incoloy 825	Duplex 2205	Duplex 2507	Monel 400	Titanium Gr2	25-4SMO
Medium Pressure	1/4 x .109 **(6.35 x 2.77)**	20,000 **(1379)**	20,000 **(1379)**	15,000 **(1034)**	8,450 **(583)**	15,000 **(1034)**	9,300 **(641)**	15,000 **(1034)**	20,000 **(1379)**	6,600 **(455)**	6,600 **(455)**	15,000 **(1034)**
	3/8 x .203 **(9.53 x 5.16)**	20,000 **(1379)**	20,000 **(1379)**	15,000 **(1034)**	8,450 **(583)**	15,000 **(1034)**	9,300 **(641)**	15,000 **(1034)**	20,000 **(1379)**	6,600 **(455)**	6,600 **(455)**	15,000 **(1034)**
	9/16 x .312 **(14.29 x 7.92)**	20,000 **(1379)**	20,000 **(1379)**	15,000 **(1034)**	8,450 **(583)**	15,000 **(1034)**	9,300 **(641)**	15,000 **(1034)**	20,000 **(1379)**	6,600 **(455)**	6,600 **(455)**	15,000 **(1034)**
	9/16 x .359 **(14.29 x 9.12)**	15,000 **(1034)**	15,000 **(1034)**	10,000 **(690)**	5,175 **(357)**	12,000 **(827)**	7,000 **(483)**	10,000 **(690)**	15,000 **(1034)**	4,150 **(286)**	5,925 **(409)**	10,000 **(690)**
	3/4 x .438 **(19.05 x 11.13)**	20,000 **(1379)**	20,000 **(1379)**	15,000 **(1034)**	8,450 **(583)**	15,000 **(1034)**	9,300 **(641)**	15,000 **(1034)**	20,000 **(1379)**	6,600 **(455)**	6,600 **(455)**	15,000 **(1034)**
	3/4 x .516 **(19.05 x 13.11)**	15,000 **(1034)**	15,000 **(1034)**	10,000 **(690)**	5,175 **(357)**	12,000 **(827)**	7,000 **(483)**	10,000 **(690)**	15,000 **(1034)**	4,150 **(286)**	5,925 **(409)**	15,000 **(1034)**
	1.00 x .562 **(25.40 x 14.27)**	20,000 **(1379)**	20,000 **(1379)**	15,000 **(1034)**	8,450 **(583)**	15,000 **(1034)**	9,300 **(641)**	15,000 **(1034)**	20,000 **(1379)**	6,600 **(455)**	6,600 **(455)**	15,000 **(1034)**
	1.00 x .688 **(25.40 x 17.48)**	15,000 **(1034)**	15,000 **(1034)**	10,000 **(690)**	5,175 **(357)**	12,000 **(827)**	7,000 **(483)**	10,000 **(690)**	15,000 **(1034)**	4,150 **(286)**	5,925 **(409)**	10,000 **(690)**
	1-1/2 x .937 **(38.10 x 23.80)**	15,000 **(1034)**	15,000 **(1034)**			10,000 **(690)**	7,000 **(483)**	10,000 **(690)**	15,000 **(1034)**			12,500 **(862)**

Tubing (Seamless) - High Pressure

Tubing Series	Tubing Size Outside x Inside Diameter inches (mm)	Material vs. Pressure Rating - PSI (bar) @ room Temperature††*										
		316CW	317CW	Hastelloy C276	Inconel 600	Inconel 625	Incoloy 825	Duplex 2205	Duplex 2507	Monel 400	Titanium Gr2	25-4SMO
High Pressure	1/4 x .083 **(6.35 x 2.11)**	60,000 **(4137)**	60,000 **(4137)**	30,000 **(1935)**	21,300 **(1469)**	35,900 **(2475)**	20,000 **(1379)**	38,000 **(2620)**	52,000 **(3585)**	17,025 **(1174)**	24,300 **(1675)**	28,500 **(1965)**
	3/8 x .125 **(9.53 x 3.18)**	60,000 **(4137)**	60,000 **(4137)**	30,000 **(1935)**	21,300 **(1469)**	35,900 **(2475)**	20,000 **(1379)**	38,000 **(2620)**	52,000 **(3585)**	17,025 **(1174)**	24,300 **(1675)**	28,500 **(1965)**
	9/16 x .188 **(14.29 x 4.78)**	60,000 **(4137)**	60,000 **(4137)**	30,000 **(1935)**	21,300 **(1469)**	35,900 **(2475)**	20,000 **(1379)**	38,000 **(2620)**	52,000 **(3585)**	17,025 **(1174)**	24,300 **(1675)**	28,500 **(1965)**
	9/16 x .250 **(14.29 x 6.35)**	40,000 **(2758)**	40,000 **(2758)**	23,000 **(1483)**	15,400 **(1062)**	26,000 **(1793)**	15,000 **(1034)**	28,000 **(1931)**	38,000 **(2620)**	11,000 **(759)**	17,600 **(1213)**	21,000 **(1448)**
	1.00 x .438 **(25.40 x 11.13)**	43,000 **(2965)**	43,000 **(2965)**	23,000 **(1483)**	15,900 **(1096)**	27,000 **(1862)**	15,000 **(1034)**	29,000 **(1999)**	39,000 **(2689)**	11,300 **(779)**	18,200 **(1255)**	21,000 **(1448)**

†† The tubing pressure rating in some instances is lower than the rating of the valve and fitting. Tubing connection type and/or packing material may limit maximum temperature rating. See pages 5 & 6 for further temperature limitations.

* For ratings at elevated temperatures see P/T Rating Curves on pages 9 & 10.

All general terms and conditions of sale, including limitations of our liability, apply to all products and services sold.

Technical Information - Pressure vs. Temperature Rating Curves

Hastelloy C276

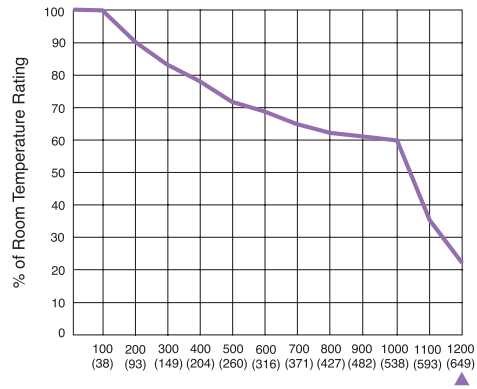

Maximum Coincident Metal Temperature

Inconel 600

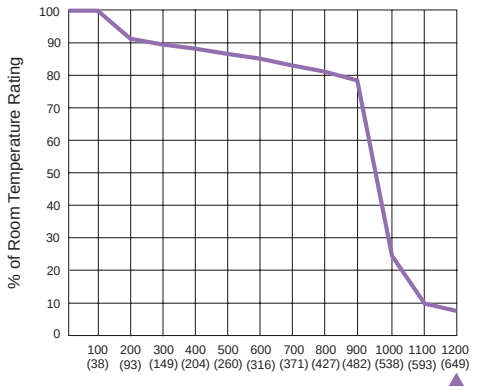

Maximum Coincident Metal Temperature

Inconel 625

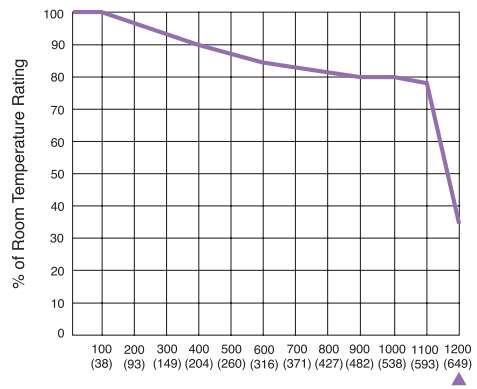

Maximum Coincident Metal Temperature

Incoloy 825

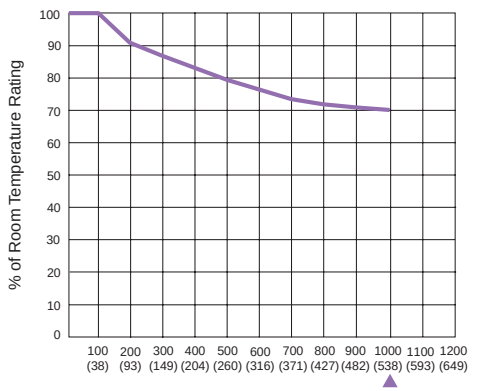

Maximum Coincident Metal Temperature

Duplex 2205

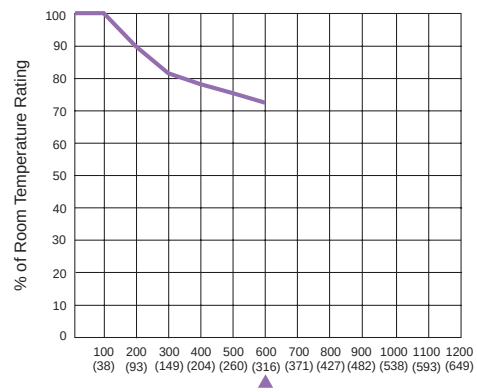

Maximum Coincident Metal Temperature

Duplex 2507

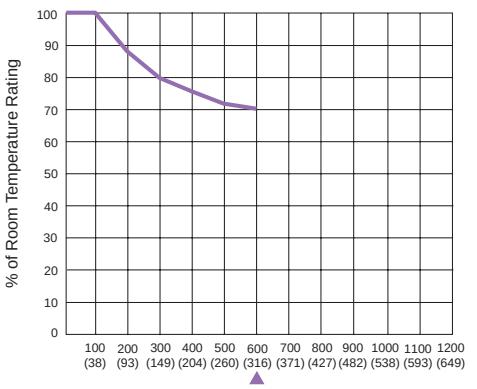

Maximum Coincident Metal Temperature

All general terms and conditions of sale, including limitations of our liability, apply to all products and services sold.

Tel: +45 63 12 83 00 | Email: ps@hymatik.com | www.hymatik.com | Hvidkaervej 27a, DK-5250 Odense SV, Denmark

Technical Information - Pressure vs. Temperature Rating Curves

25-4SMO

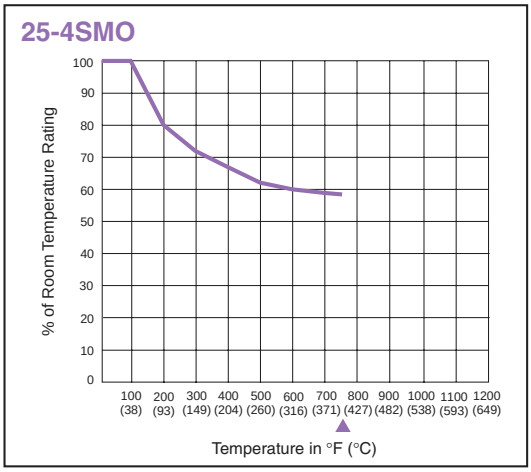

Maximum Coincident Metal Temperature

Monel 400

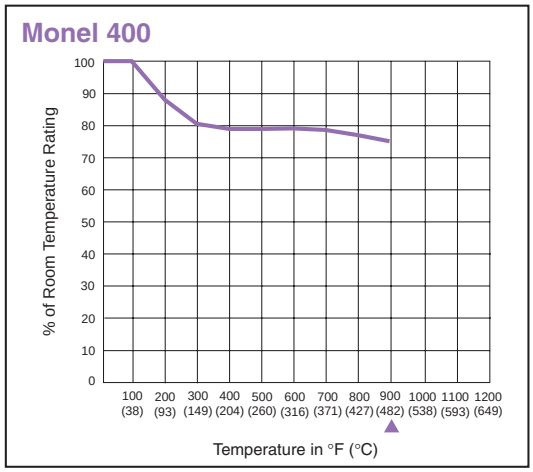

Maximum Coincident Metal Temperature

Titanium Grade 2

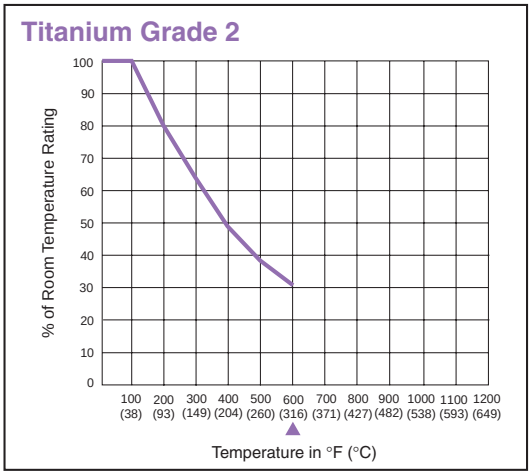

Maximum Coincident Metal Temperature

Curves and ratings presented here are average values for reference only and can be significantly affected by pressure and temperature characteristics of trim materials, stem packing materials (or o-rings), and connection type. Other options such as an extended stuffing box will be required to achieve the maximum temperature rating. See pages 5 and 6 for further temperature limitations. For unusual pressure/temperature requirements, please consult factory for recommended body, trim and packing specifications.

To obtain the maximum pressure rating at an elevated temperature, multiply the maximum pressure rating of the item (in special material) at room temperature, by the elevated temperature factor (% of RT).

Example: What would be the pressure rating of a 30VM 1/4 inch valve constructed of Titanium Grade 2 at 600°F (316°C)?

From the Material vs. Pressure rating chart on pages 7 & 8 for valves and fittings, the maximum pressure rating for a 30VM 1/4 inch valve constructed of Titanium Grade 2 would be 15,200 psi (1048 bar).

To determine the approximate pressure rating at 600°F (316°C), the Pressure vs. Temperature Rating Curves will be used. A vertical line on the x-axis (Temperature) is traced at 600°F (316°C) [on the Titanium Grade 2 graph], until it intersects the curve. A horizontal line is then drawn to the y-axis (% of rated pressure @ RT) and read as 30%. The room temperature rating of the Titanium Grade 2 valve is multiplied by the temperature reduction factor (.30) 15,200 psi (1048 bar) to approximate the temperature corrected pressure of 4,560 psi (314 bar).

See page 5 for further packing temperature limitations.

316/317 Material - see page 6.

All general terms and conditions of sale, including limitations of our liability, apply to all products and services sold.

Technical Information - Flow Calculations

Liquids & Gases

Coefficient of flow (C_v) for a valve is the volume of water, in U.S gallons per minute at room temperature, which will flow through the valve with the stem fully open with a pressure drop of 1 psi (.069 bar) across the valve. C_v is the valve sizing factor that permits selection of the appropriate valve to meet flow requirements of a given fluid system

The flow capacity curves presented in the ordering pages for each series of Parker Autoclave Engineers valves show the C_v for all series, sizes and stem types per number of turns of the stem. These curves also illustrate the relative flow patterns for a vee on-off stem and a regulating stem.

The C_v values shown on the valve ordering pages represent the full-open C_v for that valve. In determining estimated capacity, this C_v value should be used in the formulas which follow.

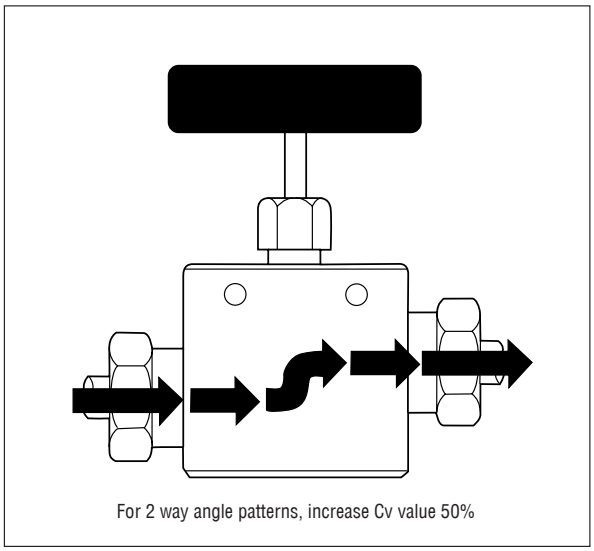

For 2 way angle patterns, increase Cv value 50%

Specific Gravity (Sg)
Typical Gases

Gas	S_G@RT Relative to Air
Acetylene	0.897
Air	1.000
Ammonia	0.587
Argon	1.377
Butane	2.070
Carbon Dioxide	1.516
Ethylene	0.967
Helium	0.138
Hydrogen	0.0695
Methane	0.553
Nitrogen	0.966
Oxygen	1.103
Propane	1.562
Sulphur Dioxide	2.208

Specific Gravity (Sgf)
Typical Liquid

Liquid	S_{GF}@RT Relative to Water
Acetone	0.792
Alcohol	0.792
Benzine	0.902
Gasoline	0.751
Gasoline, nat.	0.680
Kerosene	0.815
Pentane	0.624
Water	1.000

Flow Formulas

Liquids

☐ Flow, U.S. gal./min.

$$V = \frac{C_V \sqrt{P_1 - P_2}}{\sqrt{S_{GF}}}$$

☐ Flow, lb./hr.

$$V = 500\ C_V \sqrt{(P_1 - P_2)\ /S_{GF}}$$

Gases

☐ Flow, SCFH

$$Q = \frac{42.2\ C_V \sqrt{(P_1 - P_2)\ (P_1 + P_2)}}{\sqrt{S_{GF}}}\ {}^{*\dagger}$$

☐ Flow, SCFH (temperature corrected)

$$Q = \frac{963\ C_V \sqrt{(P_1 - P_2)\ (P_1 + P_2)}}{\sqrt{S_G\ T_F}}\ {}^{\dagger}$$

☐ Flow, lb./hr.

$$W = 3.22\ C_V \sqrt{(P_1 - P_2)\ (P_1 + P_2)/\ S_G}\ {}^{\dagger}$$

Saturated Steam

☐ Flow, lb./hr.

$$W = 2.1\ C_V \sqrt{(P_1 - P_2)\ (P_1 + P_2)}\ {}^{\dagger}$$

Super Heated Steam

☐ Flow, lb./hr.

$$W = \frac{2.1\ C_V \sqrt{(P_1 - P_2)\ (P_1 + P_2)}}{(1 + 0.0007\ T_S)}\ {}^{\dagger}$$

Formula Nomenclature

V = Flow, U.S. gallons per minute (GPM)
Q = Flow, standard cu.ft. per hr. (SCFH)
W = Flow, pounds per hour (lb./hr.)
P1 = Inlet pressure, psia (14.7 + psig)
P2 = Outlet pressure, psia (14.7 + psig)
Sgf = Liquid specific gravity (water = 1.0)
Sg = Gas specific gravity (air = 1.0)
Tf = Flowing temp., °R absolute (460 + °F)
Ts = Superheat in °F
Cv = Valve coefficient of flow, full open

** Effect of flowing temperatures on gas flow are minimal for temperatures between 30°F (-1.1°C) and 150°F (66°C). Correction should be included if temperatures are higher or lower.*

† Where outlet pressure P_2 is equal to or less than 1/2 inlet pressure P_1, the term:

$$\sqrt{(P_1 - P_2)\ (P_1 + P_2)}\ \textit{becomes}\ 0.87\ P_1$$

Note: Maximum Cv values in this catalog have been determined in accordance with the Fluid Controls Institute report FCI58-2. "Recommended Voluntary Standards for Measurement Procedure for Determining Control Valve Flow Capacity," including procedure, design of the test stand and evaluation of the data.

All general terms and conditions of sale, including limitations of our liability, apply to all products and services sold.

Technical Information - Liquid Flow Curves

Tubing

Theoretical Pressure Drop & Fluid Velocity vs. Flow, Parker Autoclave Engineers Medium and High Pressure Tubing. (Based on water @ RT)

Legend		
	Pressure drop	ΔP = psi/ft. (bar/m)
	Velocity	V = Ft./s (m/s)

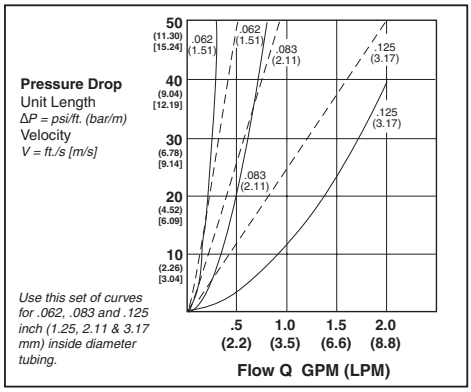

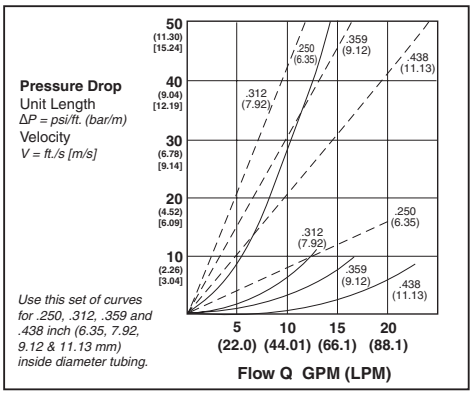

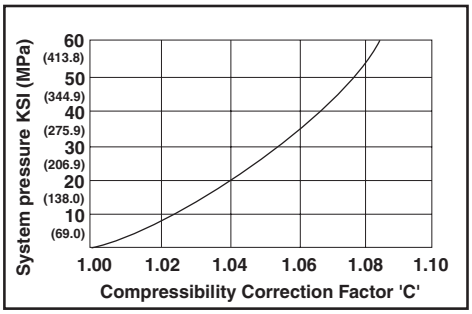

Note: Multiply pressure drop (ΔP/ft) from graph above by factor 'C' to correct for system pressure above atmospheric. Higher system pressure increases the fluid density resulting in higher system pressure loss.

Instructions: To determine the expected pressure drop, per foot of tube length, select the appropriate curves based on tube Inside Diameter. Follow the graph vertically at the design flow rate (X-axis) until it intersects the solid line, then move horizontally to read the expected pressure drop per foot (Y-axis). Multiply this by the total tube length to obtain the total pressure loss. See note below to correct for system pressures above atmospheric. To determine the average fluid velocity, repeat the above procedure, but use the dashed line. The pressure drop is for straight lengths of tube only.

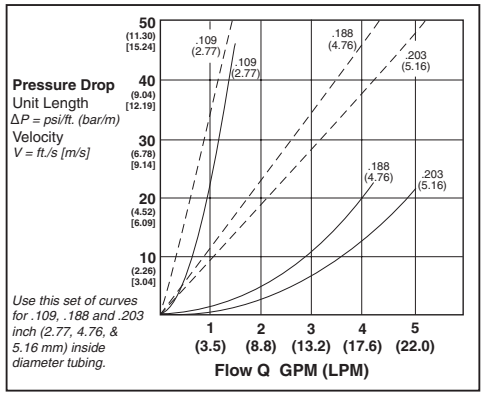

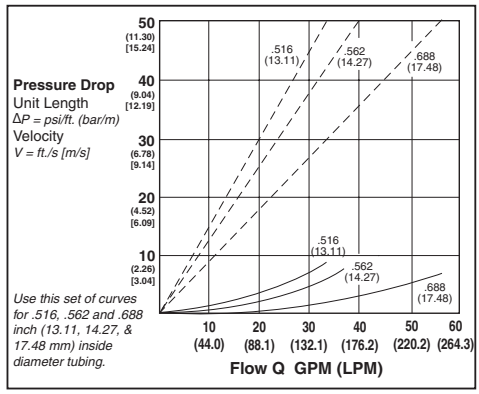

Example: What would be the expected pressure drop and average fluid velocity at 1 gallon (4.4 liter) per minute of water through 100 feet (30.48 meters) of 3/8 outside diameter x .125 inside diameter tubing at 30,000 psi (2068 bar) will be used. This curve lists .125 inch (.317mm) inside diameter data.

From the x-axis (Flow "Q" GPM (LPM) at 1 GPM (3.5 LPM) a vertical line is drawn until it intersects the solid line labeled ".125 (3.17mm)". A horizontal line is then traced to the y-axis)Pressure Drop/Unit Length) and is read 12 psi/ft. (2.71 bar/m).

Since the system pressure is 30,000 psi (2068 bar), a correction must be made to this value 12 psi/ft. (2.71 bar/m). The small graph in the lower left corner is used to determine this correction factor. A horizontal line on this graph is drawn from the y-axis System Pressure KSI (MPa) until it intersects the curve. It is then traced vertically to the x-axis (Compressibility Correction Factor 'C') and is read as 1.054.

To determine the total pressure drop, multiply the total tube length by the expected pressure drop per foot and by the correction factor 'C' (100) (12) (1.054) = 1,265 psi [(30.48m)(2.71 bar/m) (1.054)=87.10 bar].

The average fluid velocity is determined in a similar way except that on the original graph, the dashed line is used instead of the solid line. the average fluid velocity at 1 GPM (4.4 LPM) would be 25 ft/s (7.62 m/s). No correction needs to be made for elevated system pressures.

All general terms and conditions of sale, including limitations of our liability, apply to all products and services sold.

Technical Information - Conversion Tables

Temperature Equivalents

Fahrenheit °F	Celcius °C	Rankine°R	Kelvin°K
0	-18	460	255
32	0	492	273
-460	-273	0	0

Degrees Fahrenheit = °F

Degrees Celcius = 5/9 (°F - 32)

Degrees Kelvin = °C + 273.15

Degrees Rankine = °F + 459.67

Linear Equivalents

foot	inch	meter	centimeter	millimeter	micron	angstrom
1	12	0.3048	30.48	304.800	$3.048x10^5$	$3.048x10^9$
0.08333	1	0.0254	2.54	25.4	$2.54x10^4$	$2.54x10^8$
3.28083	39.37	1	100	1000	$1x10^6$	$1x10^{10}$
0.03281	0.3937	0.01	1	10	$1x10^4$	$1x10^8$
$3.281x10^{-3}$	0.03937	0.001	0.1	1	1000	$1x10^7$
$3.281x10^{-6}$	$3.937x10^{-5}$	$1x10^{-6}$	$1x10^{-4}$	$1x10^{-3}$	1	$1x10^4$
$3.281x10^{-10}$	$3.937x10^{-9}$	$1x10^{-10}$	$1x10^{-8}$	$1x10^{-7}$	$1x10^{-4}$	1

Pressure Equivalents

Pa	MPa	atm	bar	kg/cm²	psi	inches Hg	Microns Hg
1	$1x10^{-6}$	$9.8692x10^{-6}$	$1x10^{-5}$	$1.0197x10^{-5}$	$1.4504x10^{-4}$	$2.9530x10^{-4}$	7.50059
$1x10^{-6}$	1	9.8692	10	10.1971	145.04	295.30	$7.5006x10^6$
101325	0.101325	1	1.01325	1.0332	14.696	29.921	$760x10^3$
100000	0.1	0.98692	1	1.01971	14.504	29.53	$750.059x10^3$
98066.5	0.098067	0.96784	0.98067	1	14.223	28.959	$735.56x10^3$
6894.757	$6.8948x10^{-3}$	0.06805	0.06895	0.07031	1	2.036	$51.715x10^6$
3386.389	$3.3864x10^{-3}$	0.03342	0.03386	0.03453	0.49116	1	$2.54x10^4$
0.133322	$1.3332x10^{-7}$	$1.3158x10^{-6}$	$1.3332x10^{-6}$	$1.3595x10^{-6}$	$19.337x10^{-6}$	$39.37x10^{-6}$	1

PSIG = lb./in.² Gage

PSIG = lb./in.² absolute

PSIA = PSIG plus atmospheric pressure

1Torr = 133.322Pa

Volume Equivalents

meter³	foot³	gallon*	liter	quart	inch³	cc
1	35.31	264.2	1000	1056.8	61023	$1x10^6$
$28.317x10^{-3}$	1	7.4822	28.317	29.92	1728	$28.317x10^3$
$3.785x10^{-3}$	0.1337	1	3.785	4	231	3785
$1x10^{-3}$	0.03531	0.2642	1	1.057	61.023	1000
$9.463x10^{-4}$	0.03342	0.25	0.9463	1	57.75	946.25
$1.638x10^{-5}$	$5.787x10^{-4}$	$43.29x10^{-4}$	0.01639	0.01732	1	16.387
$1x10^{-6}$	$35.31x10^{-6}$	$2.642x10^{-4}$	$1x10^{-3}$	$10.568x10^{-4}$	0.06102	1

*U.S. Gallons

US. gallon = 0.833 British Imperial gallon

British Imperial gallon = 1.201 US. gallon

US. gallon water = 8.345 pounds

British Imperial gallon water= 10.022 pounds

US. fluid ounce = 29.573 centimeters³

British Imperial fluid ounce = 28.413 centimeters³

Density Equivalents

pound/inch³	pound/ft³	kg/meter*	pound/gallon³	gram/cm³
1	1728	231	$27.68x10^3$	27.6797
$5.787x10^{-4}$	1	0.1337	16.018	0.01602
$4.33x10^{-3}$	7.48	1	119.8257	0.11983
$3.613x10^{-5}$	0.06243	$8.3445x10^{-3}$	1	.001
0.03613	62.43	8.3445	1000	1

*U.S. Gallons

Fluid Flow Equivalents

*gal/hr	*gal/min	cu ft/hr	cu ft/min	liters/hr	liters/min	cc/min
1	0.01667	0.1337	$2.228x10^{-3}$	3.7848	0.06308	63.08
60	1	8.022	0.1337	227.1	3.7848	3784.8
7.48	0.1247	1	0.01667	28.32	0.472	472
448.8	7.48	60	1	1698.6	28.32	$28.32x10^3$
0.26418	$4.403x10^{-3}$	0.03531	$5.886x10^{-4}$	1	0.01667	16.67
15.8502	$264.18x10^{-3}$	2.11887	0.03531	60	1	1000
.01585	$264.2x10^{-6}$	$2.1187x10^{-3}$	$35.3145x10^{-6}$	.06	0.001	1

*U.S. Gallons

All general terms and conditions of sale, including limitations of our liability, apply to all products and services sold.

Tel: +45 63 12 83 00 | Email: ps@hymatik.com | www.hymatik.com | Hvidkaervej 27a, DK-5250 Odense SV, Denmark

Technical Information - Conversion Tables

Area Equivalents

ft^2	in^2	m^2	cm^2	mm^2
1	144	0.09291	929.034	$9.29x10^4$
$6.944x10^{-3}$	1	$6.451x10^{-4}$	6.4516	645.1625
10.7639	1550	1	$1x10^{-4}$	$1x10^6$
$1.0764x10^{-3}$	0.155	$1x10^{-4}$	1	100
$1.076x10^{-5}$	$1.55x10^{-3}$	$1x10^{-6}$	.01	1

Weight Equivalents

pound	ounce	kilogram	gram	grain
1	16	.45351	453.592	7000
0.0625	1	.02836	28.345	437.5
2.205	35.27	1	1000	$15.435x10^3$
$2.205x10^{-3}$	0.03527	0.001	1	15.435
$1.428x10^{-4}$	0.002285	$64.8x10^{-6}$	0.0648	1

Power Equivalents

kilowatt	horsepower*	ft lbs/sec	ft lbs/min	ft lbs/hr	Btu/sec	Btu/min	Btu/hr
1	1.341	738	44.280	$2.653x10^6$	0.948	56.9	3413
.7457	1	550	$33x10^3$	$1.99x10^6$	0.707	42.41	25.44
$13.55x10^{-4}$	$18.18x10^{-4}$	1	60	3600	$12.84x10^{-4}$	0.0771	4.62
$22.59x10^{-6}$	$0.303x10^{-4}$	0.01667	1	60	$21.41x10^{-6}$	$12.84x10^{-4}$	0.0771
$0.376x10^{-6}$	$0.505x10^{-6}$	$2.78x10^{-4}$	0.01667	1	$0.357x10^{-6}$	$21.41x10^{-6}$	$12.84x10^{-4}$
1.055	1.416	778	$46.7x10^3$	$2.802x10^{-6}$	1	60	3600
0.01759	0.02359	12.98	778	$46.7x10^3$	0.01667	1	60
$2.925x10^{-4}$	$3.933x10^{-4}$	0.2163	12.98	778	$2.778x10^{-4}$	0.01667	1

*U.S. Horsepower

US. horsepower = 1.014 metric horsepower

Metric. horsepower = 0.986 US. horsepower

Work or Energy Equivalents

kilowatt-hours	horsepower* hours	foot-pounds	inch-pounds	Btu	kilogram-meters	kilogram-calories	joules Newton meters
1	1.342	$2.655x10^6$	$31.86x10^6$	3415	$367.1x10^3$	860.238	$3.6x10^6$
.7457	1	$1.98x10^6$	$23.76x10^6$	2546.5	$273.546x10^3$	641.477	$2.685x10^6$
$0.376x10^{-6}$	$0.505x10^{-6}$	1	12	$1.286x10^{-3}$	0.13826	$3.239x10^{-4}$	1.3562
$0.313x10^{-7}$	$0.458x10^{-7}$	0.08333	1	$0.107x10^{-3}$	$11.522x10^{-3}$	$0.27x10^{-4}$	0.11302
$2.928x10^{-4}$	$3.929x10^{-4}$	778	9336	1	107.5	0.2519	1054.8
$2.717x10^{-6}$	$3.653x10^{-6}$	7.233	86.796	$9.302x10^{-3}$	1	$23.43x10^{-4}$	9.804
$1.161x10^{-3}$	$1.558x10^{-3}$	3088.26	37059.12	3.9683	427.32	1	4189.48
$2.774x10^{-7}$	$3.7229x10^{-7}$	0.7373	8.8476	$9.478x10^{-4}$	0.10194	$2.39x10^{-4}$	1

*U.S. Horsepower

Velocity Equivalents

cm/sec	meter/sec	meter/min	kilometer/hr	feet/sec	feet/min	mile/hr
1	0.01	0.6	0.036	0.03281	1.9685	0.02237
100	1	60	3.6	3.281	196.85	2.2369
1.667	0.01667	1	0.06	0.05468	3.281	.03728
27.78	0.2778	16.67	1	0.91134	54.681	0.62137
30.48	0.3048	18.29	1.0973	1	60	0.68182
0.508	$508x10^{-3}$	0.3048	0.01829	0.01667	1	0.01136
44.704	0.44704	26.82	1.6093	1.4667	88	1

Statute mile/hour = .8684 knot

Knot = 1.1516 mile/hour = 1.689 feet/second

1 Statue Mile = 5280 feet

1 Nautical Mile = 6076 feet

All general terms and conditions of sale, including limitations of our liability, apply to all products and services sold.

Technical Information - Pressure vs. Bend Radius

Tubing

Allowable Pressure vs. Bend (Mandrel) Radius

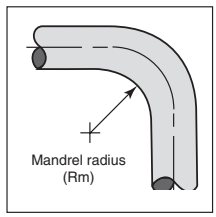

Parker Autoclave Engineers Medium & High Pressure tubing (316 & 304 SS)

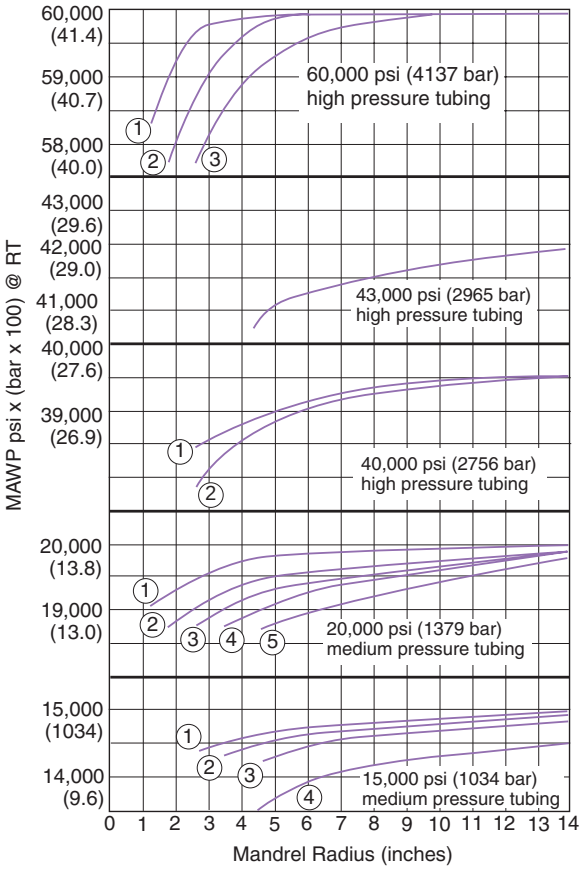

60,000 and 100,000 psi (4137 & 6895 bar)
High Pressure Tubing

	Size Inches	Rm (min.) inches (mm)
①	1/4 x .083	1.25 (31.8)
②	3/8 x .125	1.75 (44.5)
③	9/16 x .188	2.625 (66.7)

43,000 psi (2965 bar)
High Pressure Tubing

Size Inches	Rm (min.) inches (mm)
1 x .438	4.625 (117.5)

40,000 psi (2758 bar)
High Pressure Tubing

	Size Inches	Rm (min.) inches (mm)
①	9/16 x .250	2.625 (66.7)
②	9/16 x .312	

20,000 psi (1379 bar)
Medium Pressure Tubing

	Size Inches	Rm (min.) inches (mm)
①	1/4 x .109	1.25 (31.8)
②	3/8 x .203	1.75 (44.5)
③	9/16 x .312	2.625 (66.7)
④	3/4 x .438	3.5 (89.9)
⑤	1 x .562	4.625 (117.5)

15,000 psi (1034 bar)
Medium Pressure Tubing

	Size Inches	Rm (min.) inches (mm)
①	9/16 x .359	2.625 (66.7)
②	3/4 x .516	3.5 (89.9)
③	1 x .688	4.625 (117.5)
④	1 1/2 x .938	4.50 (114.3)

Parker Autoclave Engineers Ultra High Pressure tubing (316SS)

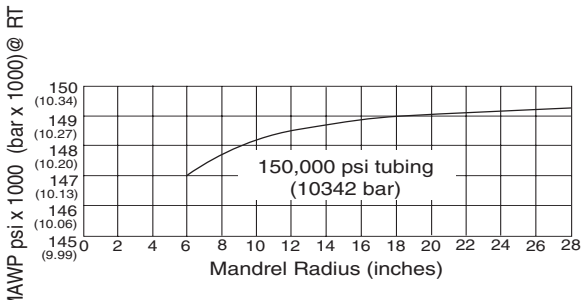

150,000 psi (10342 bar)
Ultra High Pressure Tubing

Size Inches	Rm (min.) inches (mm)
5/16 x 1/16	6 (152.4)

All general terms and conditions of sale, including limitations of our liability, apply to all products and services sold.

Tel: +45 63 12 83 00 | Email: ps@hymatik.com | www.hymatik.com | Hvidkaervej 27a, DK-5250 Odense SV, Denmark

hymatik

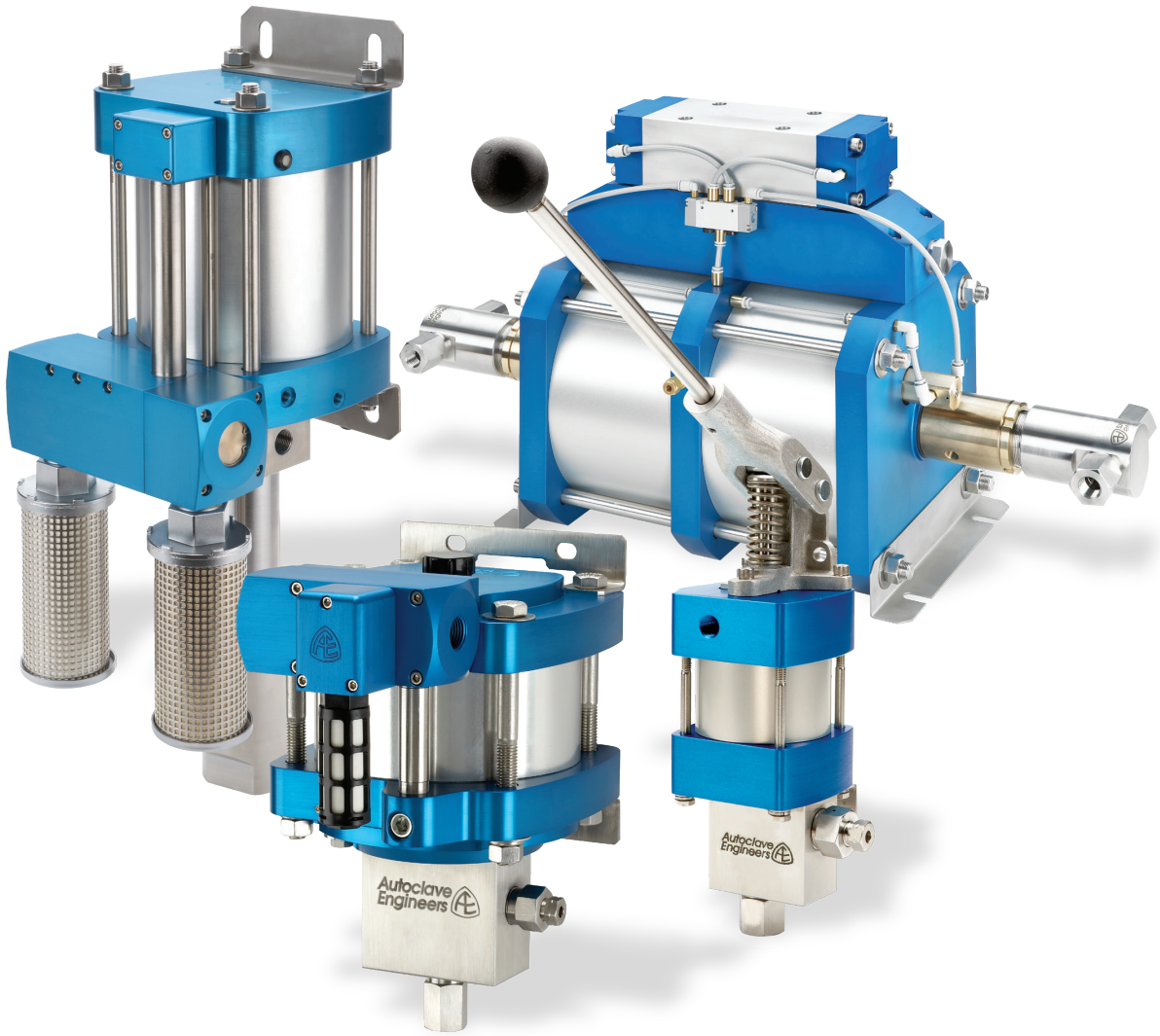

air-driven liquid pumps

Tel: +45 63 12 83 00 | Email: ps@hymatik.com | www.hymatik.com | Hvidkaervej 27a, DK-5250 Odense SV, Denmark

air-driven liquid pumps condensed catalog

Tel: +45 63 12 83 00 | Email: ps@hymatik.com | www.hymatik.com | Hvidkaervej 27a, DK-5250 Odense SV, Denmark

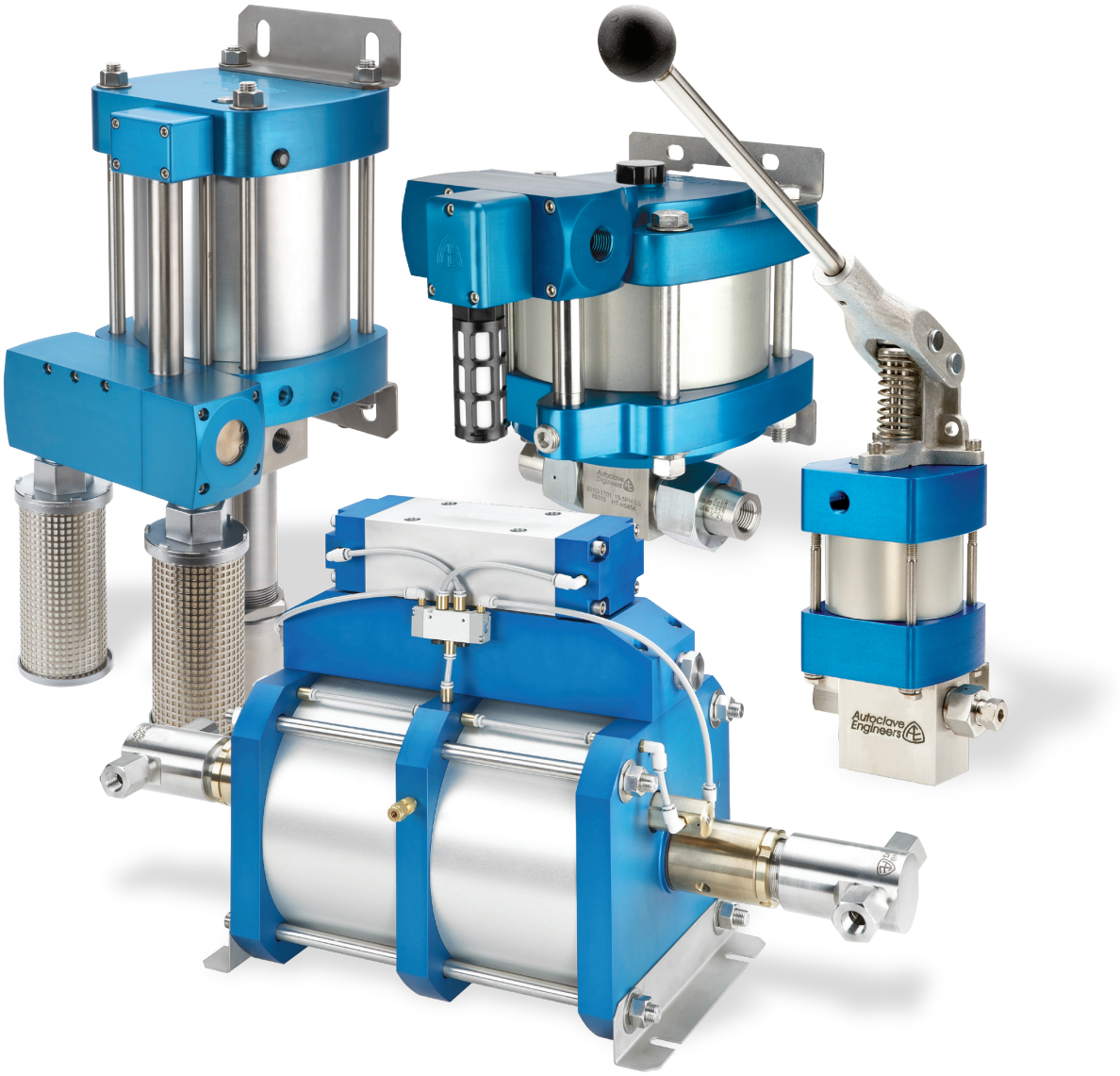

Air Driven, High Pressure Liquid Pumps

Product Catalog

Catalog: 02-9326BE

March 2022

aerospace
climate control
electromechanical
filtration
fluid & gas handling
hydraulics
pneumatics
process control
sealing & shielding

Parker

Autoclave Engineers

ENGINEERING YOUR SUCCESS.

Table of Contents

Introduction 2
Pump Series Models 3
Drive Types 3
Quick Reference Guide 4
Pump Operation 5
Air Drive Section 5
Typical Pump Cut-away 6
Pump Special Features 7
ASL Series Pump 8
ACHL Series Pump 13
AFL Series Pump 16
AHL Series Pump 19

Introduction

Parker Autoclave Engineers has always been a large user of Air-over-Liquid pump technology and has a lifetime of experience using all variety of pumps in many different configurations. We have used this experience to develop a best-in-breed line of air-driven, high pressure pumps that are efficient to operate, simple in design, and will stand the test of time. Compared to other types of hydraulic pumps, they provide cost effective and energy saving benefits for many applications in the Oil and Gas, Chemical, Industrial and Research industries.

These pumps convert simple air pressure into high and ultra-high liquid pressures by utilizing a large area piston on the air side to move a small area plunger to compress the liquid into very high hydraulic pressures - as high as 60,000 psi (4137 bar). Some designs are for economy, some for manual use, some for low-flow & high pressure, some for high flow & medium pressure. Pumps like these are perfect for product testing, valve actuation, chemical injection and other applications that require intense pressure. When used in conjunction with a Hydraulic Intensifier (another PAE product) pressures to 150,000 psi (10,000 bar) are normal.

Parker Autoclave Engineers has been making pressure and corrosion test systems as well as high pressure laboratory reaction vessels for over 70 years.





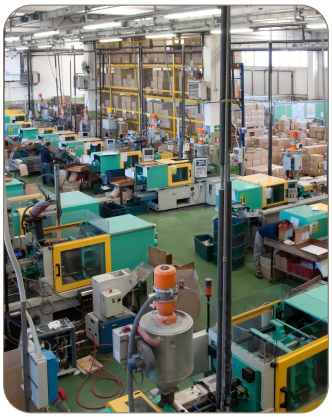

Pump Series Models



ASL Series:

- Standard Liquid Pump
- Pressures up to 60,000 psi (4137 bar)
- 6 inches in diameter air piston
- Broad range of ratios
- Single and Double Piston



ACHL Series:

- ACL Series Pump with hand lever - Air or Manually Driven
- Pressures up to 31,900 psi (2199 bar)
- Precise Pressure control operation, pump is spring returned
- 3 inches in diameter air piston



AFL Series:

- High Flow, High Pressure
- Pressures up to 5,000 psi (1035 bar)
- Flow up to 6.8 gpm (25 lpm)
- Dual Acting

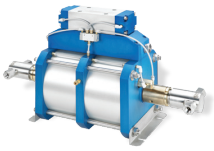

AHL Series:

- High Flow up to 7.6 gpm (29 lpm)
- Pressures up to 22,500 psi (917 bar)
- Approximately 10 inch diameter air piston
- Dual Acting

Drive Types

Pump Model				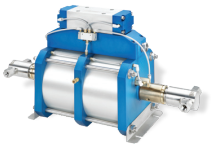
Catalog Number Suffix	**-01**	**-02**	**-1D**	**-2D**
Description	Single Acting Single Piston	Single Acting Double Piston	Double Acting Single Piston	Double Acting Double Piston

Catalog Number Example: ASL150-**01**

Tel: +45 63 12 83 00 | Email: ps@hymatik.com | www.hymatik.com | Hvidkaervej 27a, DK-5250 Odense SV, Denmark

Quick Reference Guide

Pump Type	Catalog Number	Pressure Ratio	Maximum Rated Outlet Pressure PSI (bar)	Displacement Per Cycle .in³ (cm³)	Max. Flow GPM	Liquid Connections	
						Inlet	Outlet
ASL Series - Air Driven Standard Size Liquid Pumps							
Prefill/Flushing	ASL10-01	1:11	1,600 (110)	5.22 (85.5)	5.0	1" FNPT	1/2" FNPT
Low Pressure	ASL25-01	1:28	4,000 (276)	2.10 (34.4)	2.3	1/2" FNPT	1/2" FNPT
Low Pressure	ASL35-01	1:39	5,600 (386)	1.50 (24.64)	1.3	1/2" FNPT	1/2" FNPT
Test Pump	ASL60-01	1:70	10,000 (689)	0.84 (13.8)	.79	1/2" FNPT	1/2" FNPT
Test Pump	ASL100-01	1:113	15,000 (1,034)	0.52 (8.5)	.48	1/2" FNPT	1/2" FNPT
Test Pump	ASL150-01	1:150	21,500 (1,482)	0.39 (6.4)	.36	1/2" FNPT	1/4" F250C
Test Pump	ASL250-01	1:265	38,400 (2,648)	0.22 (3.6)	.21	1/2" FNPT	1/4" F250C
Test Pump	ASL400-01	1:398	57,700 (3,978)	0.14 (2.3)	.14	1/2" FNPT	1/4" F250C
Test Pump	ASL35-02	1:78	11,200 (772)	1.50 (24.64)	1.05	1/2" FNPT	1/2" FNPT
Test Pump	ASL60-02	1:140	20,000 (1,379)	0.84 (13.8)	.63	1/2" FNPT	9/16" SF562CX
Test Pump	ASL100-02	1:226	31,000 (2,137)	0.52 (8.5)	.37	1/2" FNPT	1/4" F250C
Test Pump	ASL150-02	1:300	43,000 (2,965)	0.39 (6.4)	.28	1/2" FNPT	1/4" F250C
Test Pump	ASL400-02	1:796	60,000 (4,137)	0.14 (2.3)	.11	1/2" FNPT	1/4" F250C
ACHL Series							
Compact/ Manual Pumps	ACHL72-01	1:84	12,500 (862)	0.09 (1.47)	.17	3/8" FNPT	1/4" F250C
	ACHL189-01	1:213	31,900 (2,1990)	0.035 (0.57)	.19	3/8" FNPT	1/4" F250C
AHL Series							
Chemical Injection	AHL33-2D	1:67	6,700 (462)	15.3 (250.7)	7.6	1" FNPT	1/2" FNPT
	AHL66-2D	1:133	13,300 (917)	7.8 (127.8)	3.6	1/2" FNPT	1/2" FNPT
	AHL118-2D	1:239	22,500 (1551)	4.4 (72.1)	2.3	1/2" FNPT	9/16" SF562CX
AFL Series							
High Flow Pumps	AFL35-1D	1:39	5,600 (386)	6.02 (98.7)	6.9	1" FNPT	9/16" SF562CX
	AFL60-1D	1:70	10,000 (690)	3.40 (55.7)	3.9	1" FNPT	9/16" SF562CX
	AFL100-1D	1:113	15,000 (1034)	2.30 (37.7)	2.9	1" FNPT	9/16" SF562CX

Tel: +45 63 12 83 00 | Email: ps@hymatik.com | www.hymatik.com | Hvidkaervej 27a, DK-5250 Odense SV, Denmark

Pump Operation

Piston to Plunger Ratio

- Compressed air is used to produce hydraulic pressure
- Works on differential surface area between the large air piston and smaller hydraulic plunger
- Differential is represented by the pressure ratio of the pump

Pressure Ratio = Area of Air Piston ÷ Area of Hydraulic Plunger

- The higher the pressure ratio, the higher the output hydraulic pressure

Pressure Output = Pressure Ratio x Air Drive Pressure

- When air is applied to the pump it will cycle until the forces on the air piston equals the forces on the hydraulic plunger. This is the stall pressure.
- Pump will automatically restart if there is a drop in hydraulic pressure or an increase in air drive pressure.
- Double air pistons available which will double the pressure ratio because you have twice the air piston area acting on the same hydraulic plunger area.

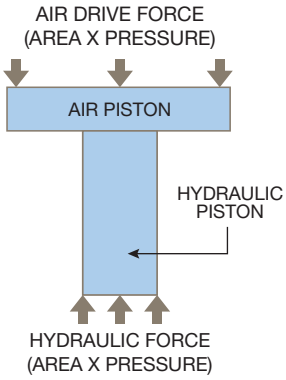

Air Drive Section

- Compressed air is used to produce hydraulic pressure
- Works on differential surface area between the large air piston and smaller hydraulic plunger
- Differential is represented by the pressure ratio of the pump

Section 1

- Air pilot operated spool provides automatic cycling of air from one side of the piston to the other
- At the end of each stroke, the air piston activates a pilot valve that will cause the spool to shift

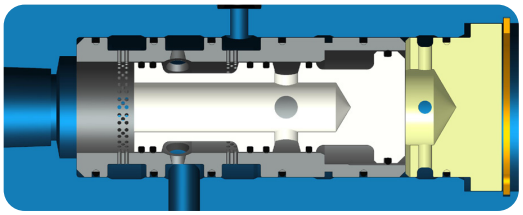

Section 2

- The spool shifting will supply air to one side of the piston while venting the other side of the piston
- This alternating action continues until the pump reaches its stall pressure

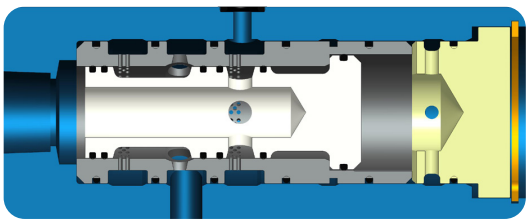

Tel: +45 63 12 83 00 | Email: ps@hymatik.com | www.hymatik.com | Hvidkaervej 27a, DK-5250 Odense SV, Denmark

Typical Pump Cut-Away

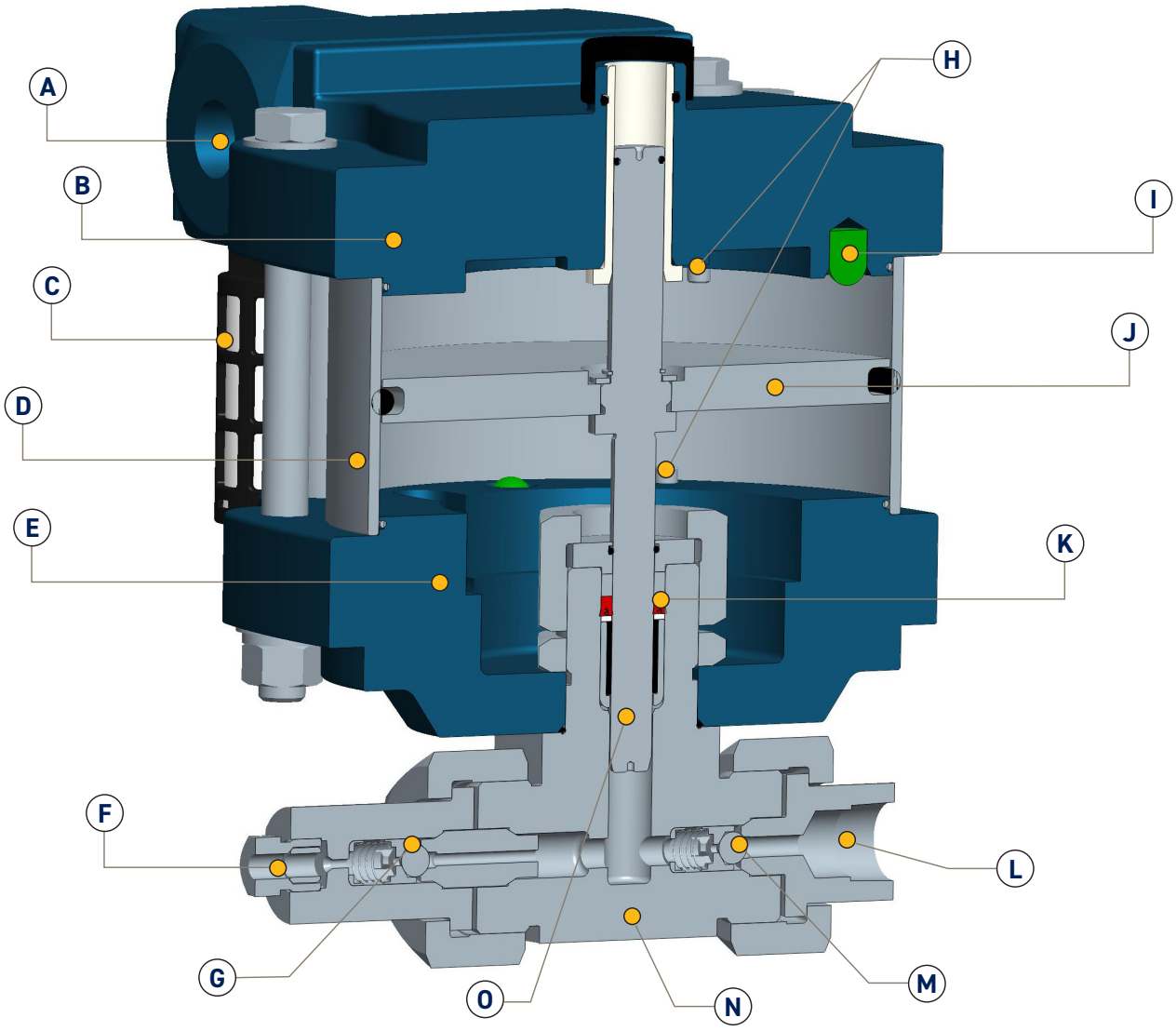

	Description
A	Air Inlet
B	Top End Cap
C	Air Muffler
D	Air Cylinder
E	Bottom End Cap
F	High Pressure Outlet Connection
G	Outlet Check Valve
H	Pilot Valve

	Description
I	Air Piston Bumper
J	Air Piston
K	High Pressure Seal Assembly
L	Liquid Inlet Connection
M	Inlet Check Valve
N	Pump Head Body
O	Hydraulic Plunger

Tel: +45 63 12 83 00 | Email: ps@hymatik.com | www.hymatik.com | Hvidkaervej 27a, DK-5250 Odense SV, Denmark

Pump Special Features & Benefits

- All Aluminum parts machined from high quality bar stock, not cast aluminum components
- Anodizing with special sealing technique to provide better protection from harsh environments
- Muffler specified to give a great combination of high flow and low noise
- Rubber bumpers in end caps to reduce noise of operation
- Latest lubrication technology provides long seal service life and improves pump efficiency and performance
- No lubricator required for air drive source
- Stainless steel tie-rods and hardware
- Stainless plunger coated with a proprietary multi-layer carbon based coating with diamond like carbon exterior layer:
  - High hardness (3 times harder than Stellite)
  - Inert, it has superior chemical compatibility and corrosion resistance
  - Low friction that limits seal wear and increases efficiency (coefficient of friction equal to or less than PTFE)
  - Tough coating that provides long plunger cycle life.
- Pressure head specially designed and engineered for high cycle life
- Spring energized U-cup seal provides better sealing performance at wide ranges of pressures
- Extended service life check valves with Ceramic balls for high pressure applications

Tel: +45 63 12 83 00 | Email: ps@hymatik.com | www.hymatik.com | Hvidkaervej 27a, DK-5250 Odense SV, Denmark

ASL SERIES Single-Acting, Single or Double Piston Air Drive



Features:

- Pressure Ranges from 1,600 to 60,000 psi (110 to 4100 bar) max
- Operating Temperature Range: 0˚ to 140˚F (-18˚ to 60˚C)
- Pressure Head Material: 15-5 PH Stainless Steel
- Plunger: Stainless Steel, coated with proprietary multi-layer carbon for long life
- Liquid Side Material: All Stainless Steel Construction
- Air Side Material: Anodized Aluminum

Technical Data:

- Liquid Connections: Side Inlet Only – see chart (page 9)
- Isolation Chamber: Only available on ASL400-02 pump
- Displacement per stroke: See chart (page 9)
- Liquid Seals:

  ASL10 to ASL35 = UHMWPE U-Cup and FKM Orings (PV option)
  ASL60 to ASL400 – UHMWPE U-Cup w/Elgiloy Spring Energizer
- Air Drive Pressure Range: 15-150 psi (1-10 bar) * See Note
- Main Air Inlet: ½" FNPT (Regulated)
- Pilot Air Inlet: 1/8" FNPT (unregulated)
- Max Air Consumption: 70 SCFM @ 90 psi (no pressure)
- Pre-Lubricated Piston at Factory
- Air Seals: Buna-N

Note: *Maximum air drive pressure is limited by maximum pressure shown in chart on Page 9.

Tel: +45 63 12 83 00 | Email: ps@hymatik.com | www.hymatik.com | Hvidkaervej 27a, DK-5250 Odense SV, Denmark

ASL Pump Part Number Matrix

For complete information on available pump options, contact Parker Autoclave Engineers.

Typical catalog number: **ASL25-01SNPV**



Pump Type / Size / Ratio

ASL =
- Standard Liquid High Flow, High Pressure Pump
- Air-to-Liquid Pressure Ratio:

Single Piston	Double Piston
ASL10-01 - 1:11	N/A
ASL25-01 - 1:28	N/A
ASL35-01 - 1:39	ASL35-02 - 1:78
ASL60-01 - 1:70	ASL60-02 - 1:140
ASL100-01 - 1:113	ASL100-02 - 1:226
ASL150-01 - 1:150	ASL150-02 - 1:300
ASL250-01 - 1:265	N/A
ASL400-01 - 1:398	ASL400-02 -1:796*

Liquid Inlet Location

S = Side

Isolation Chamber

N = None

***C** = Standard (ASL400-02 only)

Liquid Seal Materials

PV = UHMWPE U-Cup and FKM O-Rings (ASL10 to ASL35 Pumps Only)

P = UHMWPE U-Cup with Elgiloy Spring Energizer (All other Pump Series)

Note: Individual Pump Specifications can be found at www.Autoclave.com.

Reference Guide

Catalog Number	Pressure Ratio	Maximum Rated Outlet Pressure PSI (bar)	GPM Displacement Per Cycle .in³ (cm³)	Liquid Connections	
				Inlet	Outlet
ASL10-01SNXX	1:11	1,600 (110)	5.22 (85.5)	1" FNPT	1/2" FNPT
ASL25-01SNXX	1:28	4,000 (276)	2.10 (34.4)	1/2" FNPT	1/2" FNPT
ASL35-01SNXX	1:39	5,600 (386)	1.50 (24.64)	1/2" FNPT	1/2" FNPT
ASL60-01SNXX	1:70	10,000 (689)	0.84 (13.8)	1/2" FNPT	1/2" FNPT
ASL100-01SNXX	1:113	15,000 (1,034)	0.52 (8.5)	1/2" FNPT	1/2" FNPT
ASL150-01SNXX	1:150	21,500 (1,482)	0.39 (6.4)	1/2" FNPT	1/4" F250C
ASL250-01SNXX	1:265	38,400 (2,648)	0.22 (3.6)	1/2" FNPT	1/4" F250C
ASL400-01SCXX	1:398	57,700 (3,978)	0.14 (2.3)	1/2" FNPT	1/4" F250C
ASL35-02SNXX	1:78	11,200 (772)	1.50 (24.64)	1/2" FNPT	1/2" FNPT
ASL60-02SNXX	1:140	20,000 (1,379)	0.84 (13.8)	1/2" FNPT	9/16" SF562CX
ASL100-02SNXX	1:226	31,000 (2,137)	0.52 (8.5)	1/2" FNPT	1/4" F250C
ASL150-02SNXX	1:300	43,000 (2,965)	0.39 (6.4)	1/2" FNPT	1/4" F250C
ASL400-02SCXX	1:796	60,000 (4,137	0.14 (2.3)	1/2" FNPT	1/4" F250C

Air Drive Connection

All ASL Series Pumps have a 1/2" FNPT regulated main air drive supply connection and utilize a 1/8" FNPT pilot port connection for remote start/stop operation. It is recommended to operate the pilot port at a higher air pressure unregulated than the main air drive supply pressure for proper function.

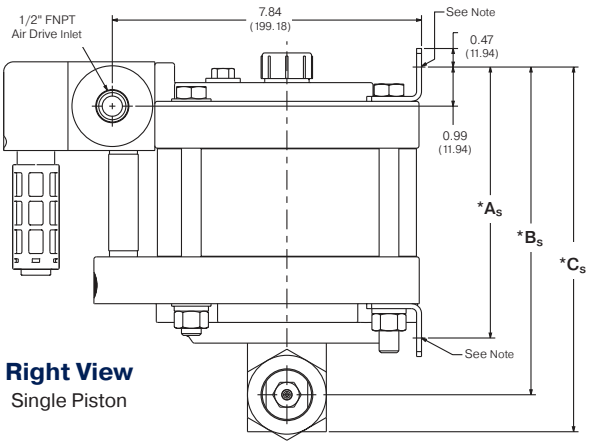

Right View
Single Piston

*See following page for product dimensions.

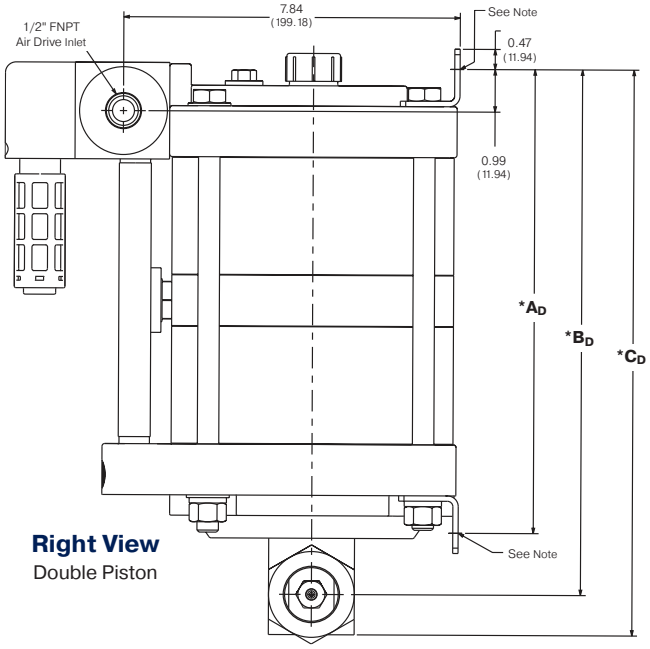

Right View
Double Piston

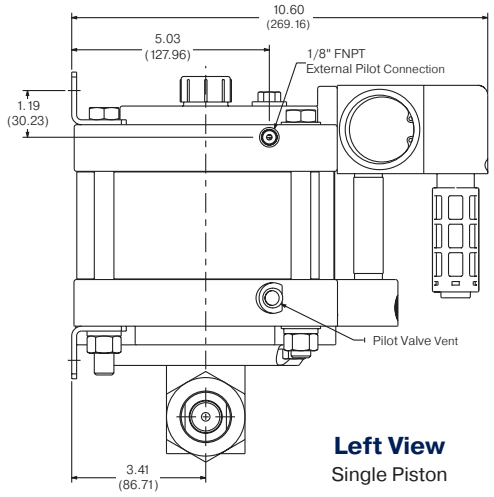

Left View
Single Piston

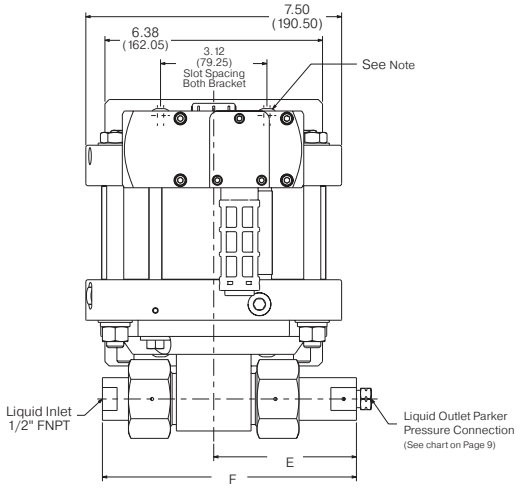

Front View
Single Piston

Note:
- Each mounting bracket includes (2) x 11/32" (8.73) slots for 5/16" bolts.
- All dimensions are for reference only and are subject to change without notice.
- Primary dimensions: Inches, Secondary Dimensions: (Millimeters)

Tel: +45 63 12 83 00 | Email: ps@hymatik.com | www.hymatik.com | Hvidkaervej 27a, DK-5250 Odense SV, Denmark

ASL Series: Dimensions

Catalog Number	A_S	B_S	C_S	D_S	E_S	F_S	G_S
Single Piston Air Drive							
ASL10-01	6.87 (175)	8.25 (210)	9.83 (250)	12.51 (318)	3.27 (83)	7.57 (192)	3.95 (100)
ASL25-01	6.87 (175)	8.25 (210)	9.83 (250)	11.54 (293)	3.27 (83)	6.92 (176)	3.95 (100)
ASL35-01	6.87 (175)	8.25 (210)	9.83 (250)	11.54 (293)	3.27 (83)	6.92 (176)	3.95 (100)
ASL60-01	6.87 (175)	8.31 (211)	9.25 (235)	12.10 (307)	3.43 (87)	7.24 (184)	3.95 (100)
ASL100-01	6.87 (175)	8.31 (211)	9.25 (235)	12.10 (307)	3.43 (87)	7.24 (184)	3.95 (100)
ASL150-01	6.87 (175)	8.31 (211)	9.25 (235)	11.55 (293)	4.18 (106)	7.45 (189)	3.95 (100)
ASL250-01	6.87 (175)	8.31 (211)	9.25 (235)	11.55 (293)	4.18 (106)	7.45 (189)	3.95 (100)
ASL400-01	6.87 (175)	8.37 (213)	9.39 (239)	11.74 (298)	2.75 (70)	6.13 (156)	3.95 (100)

Catalog Number	A_D	B_D	C_D	D_D	E_D	F_D	G_D
Double Piston Air Drive							
ASL35-02	10.81 (275)	12.19 (310)	13.77 (350)	15.48 (393)	3.27 (83)	6.92 (176)	3.95 (100)
ASL60-02	10.81 (275)	12.25 (311)	13.19 (335)	16.04 (407)	3.43 (87)	7.24 (184)	3.95 (100)
ASL100-02	10.81 (275)	12.25 (311)	13.19 (335)	15.50 (394)	4.18 (106)	7.24 (184)	3.95 (100)
ASL150-02	10.81 (275)	12.25 (311)	13.19 (335)	15.50 (394)	4.18 (106)	7.45 (189)	3.95 (100)
ASL400-02	10.81 (275)	12.30 (312)	13.32 (338)	15.68 (398)	2.75 (70)	6.13 (156)	3.95 (100)

Note:

Each mounting bracket includes two (2) x 13/32" (10.32) slots for 3/8" bolts. Bottom inlet pump head and side inlet pump head are mutually exclusive. All dimensions are for reference only and are subject to change without notice.

Primary Dimensions: Inches
Secondary Dimensions: (Millimeters)

Tel: +45 63 12 83 00 | Email: ps@hymatik.com | www.hymatik.com | Hvidkaervej 27a, DK-5250 Odense SV, Denmark

Flow Rate Table: Air Drive Pressure (psi) vs. Outlet Pressure (psi)

Catalog Number	Air Drive Pressure (psi)	Outlet Pressure (psi)											
		0	500	1,500	3,000	5,000	7,500	10,000	15,000	25,000	40,000	55,000	
ASL10-01	60	1277	489										
	90	305	826										
	120	1360	925										
ASL25-01	60	508	342	127									
	90	520	387	303									
	120	543	427	360	202								
ASL35-01	60	315	273	121									
	90	322	291	211	58								
	120	328	302	250	157								
ASL60-01	60	168	155	125	79								
	90	175	161	134	106	63							
	120	182	167	140	118	94	45						
ASL100-01	60	104	99	88	70	46							
	90	108	103	92	78	65	44	11					
	120	112	106	95	83	72	60	47					
ASL150-01	60	81	79	76	66	49	19						
	90	83	82	80	75	67	53	35					
	120	84	83	82	78	73	66	55	25				
ASL250-01	60	46	45	44	42	37	26	20	2				in^3 / min.
	90	47	46	45	44	43	40	36	26				
	120	48	47	47	46	45	43	41	34	17			
ASL400-01	60	39	38	37	36	33	29	23	10				
	90	40	39	38	38	37	35	32	26	8			
	120	41	40	39	38	38	37	36	32	21			
ASL35-02	60	240	230	210	115								
	90	242	232	225	190	115							
	120	245	235	230	210	170	95						
ASL60-02	60	150	148	145	120	70	2						
	90	155	152	147	136	117	80	33					
	120	157	154	152	145	133	112	82	8				
ASL100-02	60	86	84	82	77	72	53	30					
	90	87	86	84	82	82	70	61	36				
	120	89	88	86	84	84	77	72	57	13			
ASL150-02	60	64	64	63	60	57	50	38	14				
	90	65	65	64	62	60	57	53	41	9			
	120	66	66	65	64	63	61	58	51	32			
ASL400-02	60	31	31	30	30	29	29	28	26	16			
	90	31	31	31	30	30	30	29	27	23	14	2	
	120	31	31	31	31	30	30	30	29	27	21	14	

Tel: +45 63 12 83 00 | Email: ps@hymatik.com | www.hymatik.com | Hvidkaervej 27a, DK-5250 Odense SV, Denmark

ACHL SERIES Single-Acting, Single Air Drive with Hand Lever



Manual Operation

Air Driven Pump includes Hand Lever for manual operation or precise pressure control, remote locations, or emergency back-up.

Features:

- Pressure Ranges from 12,500 (860 bar) or 31,900 psi (2200 bar) maximum
- Operating Temperature Range: 0° to 140°F (-18° to 60°C)
- Liquid Side Material: All Stainless Steel Construction
- Air Side Material: Anodized Aluminum

Technical Data:

- Liquid Connections: Side Inlet Only – see chart (page 14)
- Displacement per stroke: See chart (page 14)
- Liquid Seals: UHMWPE U-Cup w/Elgiloy Spring Energizer
- Air Drive Pressure Range: 15-150 psi (1-10 bar) * See Note
- Main Air Inlet: 1/4" FNPT (Regulated)
- Exhaust port (muffler removed) 1/4" FNPT
- Air Seals: Buna-N
- Pre-lubricated at Factory

Note: *Maximum air drive pressure is limited by maximum pressure, see rating show above.

ACHL Pump Part Number Matrix

Typical catalog number: **ACHL72-01SNP**

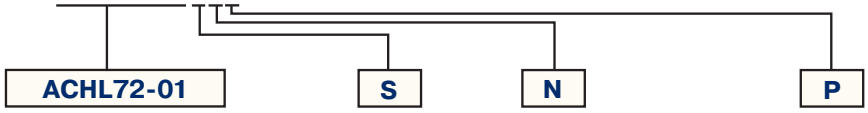

Pump Type / Size / Ratio

ACHL =
- Compact Liquid High Pressure Pump with Hand Lever
- 3" Single Piston Air Drive
- Air-to-Liquid Pressure Ratio:
  ACHL72-01 - 1:84
  ACHL189-01 - 1:213

Liquid Inlet Location

S = Side

Isolation Chamber

N = None

Liquid Seal Materials

P = UHMWPE U-Cup with Elgiloy Spring Energizer

Note: Individual Pump Specifications can be found at www.Autoclave.com.

Reference Guide

Catalog Number	Pressure Ratio	Maximum Rated Outlet Pressure PSI (bar)	Displacement Per Cycle .in³ (cm³)	Liquid Connections	
				Inlet	Outlet
ACHL72-01SNX	1:84	12,500 (862)	0.09 (1.47)	3/8" FNPT	1/4" F250C
ACHL189-01SNX	1:213	31,900 (2,199)	0.035 (0.57)	3/8" FNPT	1/4" F250C

Flow Rate Table: Air Drive Pressure (psi) vs. Outlet Pressure (psi)

Catalog Number	Air Drive Pressure (psi)	Outlet Pressure (psi)											
		0	500	1,500	3,000	5,000	7,500	10,000	15,000	25,000	40,000	55,000	
ACHL72-01SNX	60	42	32	17	9	1							in³/ min.
	90	42	34	25	18	7	1						
	120	43	35	29	24	17	7	2					
ACHL189-01SNX	60	15	15	15	15	14	13	8					
	90	15	15	15	15	15	13	11	7				
	120	15	15	15	15	15	13	12	8	1			

Tel: +45 63 12 83 00 | Email: ps@hymatik.com | www.hymatik.com | Hvidkaervej 27a, DK-5250 Odense SV, Denmark

Air Drive Connection

All ACHL Series Pumps have a 1/4" FNPT regulated main air drive supply connection

Left View

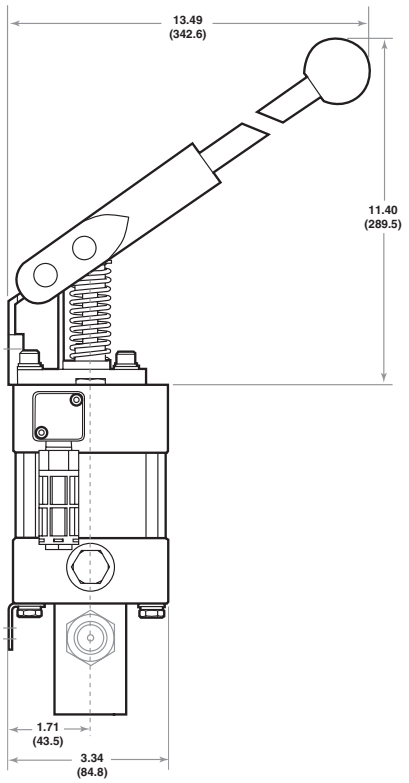

Right View

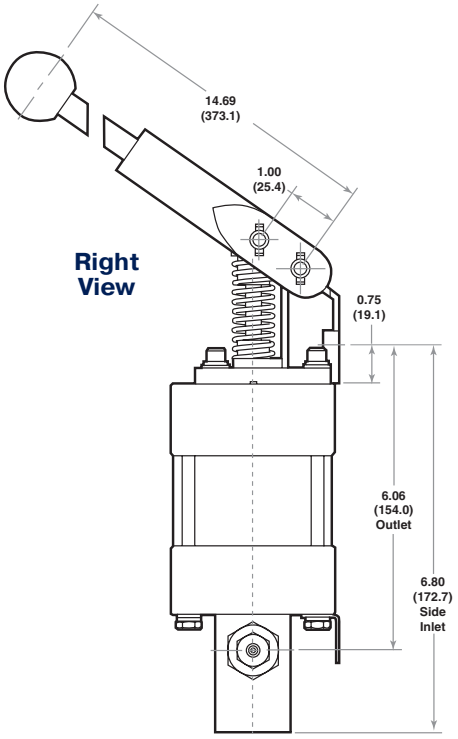

Front View

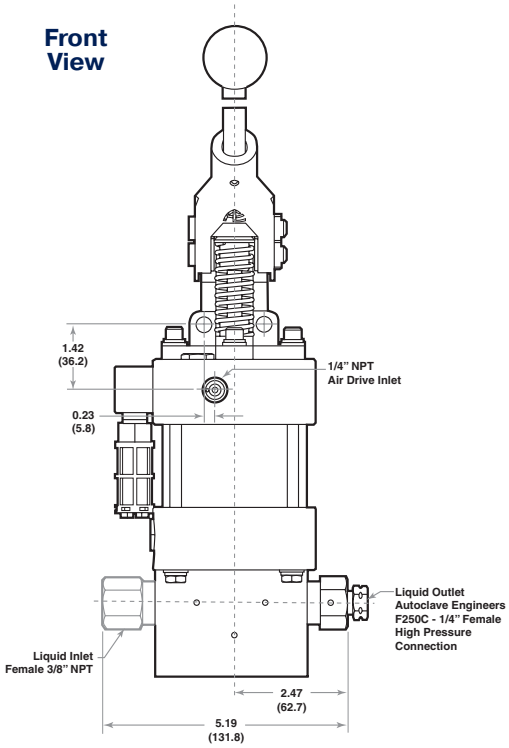

Back View

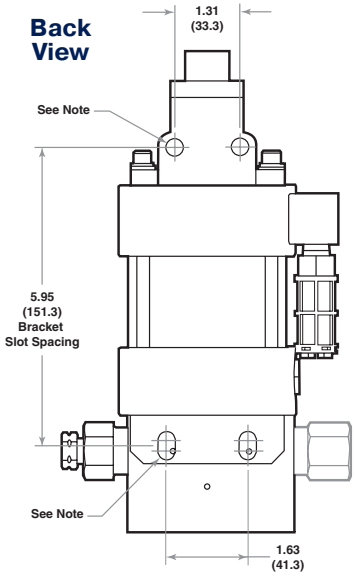

Note:

- Each Mounting Bracket includes (2) 11/32" (8.73) holes for 5/16" Bolts.
- Spool air tubing not shown for clarity.
- All dimensions are for reference only and are subject to change without notice.
- Primary Dimensions: Inches
- Secondary Dimensions: (Millimeters)

AFL SERIES Double-Acting, Single Piston Air Drive

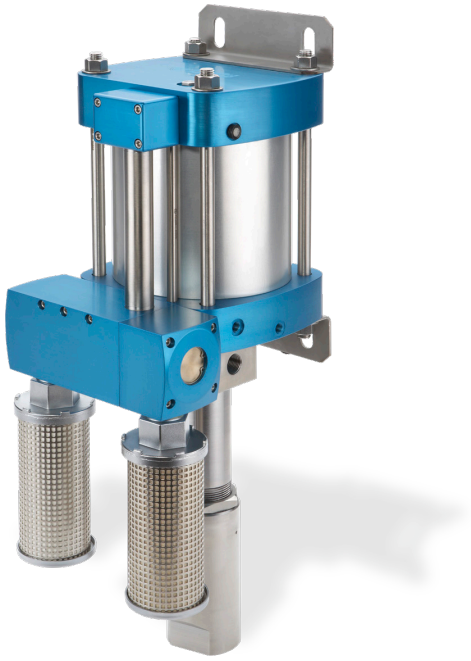

Features:

- Pressure Ranges from 5,600 to 15,000 psi (385 to 1035 bar) max
- Operating Temperature Range: 0˚ to 140˚F (-18˚ to 60˚C)
- Pressure Head Material: 15-5 PH Stainless Steel
- Plunger: Stainless Steel, coated w/proprietary multi-layer carbon for long life
- Liquid Side Material: All Stainless-Steel Construction
- Air Side Material: Anodized Aluminum

Technical Data:

- Liquid Connections: Bottom Inlet Only – see chart (page 17)
- Isolation Chamber: Standard on all sizes
- Displacement per stroke: See chart (page 17)
- Liquid Seals: UHMWPE U-Cup w/ optional o-rings (see P/N matrix)
- Air Drive Pressure Range: 15-150 psi (1-10 bar) * See Note
- Main Air Inlet: 3/4" FNPT (Regulated)
- Pilot Air Inlet: 1/8" FNPT (unregulated)
- Exhaust Port (muffler removed) 1" FNPT
- Max Air Consumption: 167 SCFM @ 90 psi
- Pre-Lubricated Piston at Factory
- Air Seals: Buna-N

Note: *Maximum air drive pressure is limited by maximum pressure shown in chart on Page 17.

Tel: +45 63 12 83 00 | Email: ps@hymatik.com | www.hymatik.com | Hvidkaervej 27a, DK-5250 Odense SV, Denmark

AFL Pump Part Number Matrix

Typical catalog number: **AFL60-1DBCPV**

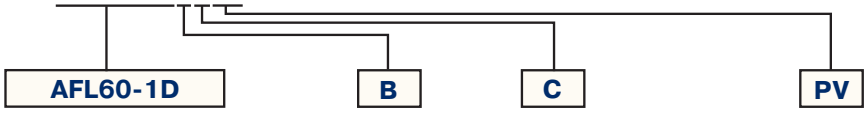

Pump Type / Size / Ratio

AFL =
- High Flow, High Pressure Pump
- 6" Single Piston Air Drive
- Air-to-Liquid Pressure Ratio:
  AFL35-1D - 1:39
  AFL60-1D - 1:70
  AFL100-1D - 1:113

Liquid Inlet Location

B = Bottom

Isolation Chamber

C = Included

Liquid Seal Materials

PV = UHMWPE U-Cup with FKM O-Rings

PB = UHMWPE U-Cup with Buna N O-rings

PC = UHMWPE U-Cup with FFKM O-rings

Note: Individual Pump Specifications can be found at www.Autoclave.com.

Reference Guide

Catalog Number	Pressure Ratio	Maximum Rated Outlet Pressure PSI (bar)	Displacement Per Cycle in^3 (cm^3)	Liquid Connections	
				Inlet	Outlet
AFL35-1DBCXX	1:39	5,600 (386)	6.02 (98.7)	1" FNPT	9/16" SF562CX
AFL60-1DBCXX	1:70	10,000 (690)	3.40 (55.7)	1" FNPT	9/16" SF562CX
AFL100-1DBCXX	1:113	15,000 (1034)	2.30 (37.7)	1" FNPT	9/16" SF562CX

Flow Rate Table: Air Drive Pressure (psi) vs. Outlet Pressure (psi)

Catalog Number	Air Drive Pressure (psi)	Outlet Pressure (psi)								
		0	500	1,500	3,000	4,500	6,000	10,000	15,000	
AFL35	60	24	19	9						Liters / min.
	90	25	21	16	6					
	120	26	23	19	12	2				
AFL60	60	14	12	9	4					
	90	14	13	11	8	6	1			
	120	15	14	12	10	8	6			
AFL100	60	10	9	7	5	3	1			
	90	11	10	8	7	6	5	1		
	120	12	11	9	8	7	6	3		

Air Drive Connection

All AFL Series Pumps have a 1/2" FNPT regulated main air drive supply connection and utilize a 1/8" FNPT unregulated pilot port connection for remote start/stop operation. It is recommended to operate the pilot port at a higher air pressure than the main air drive supply pressure for proper function.

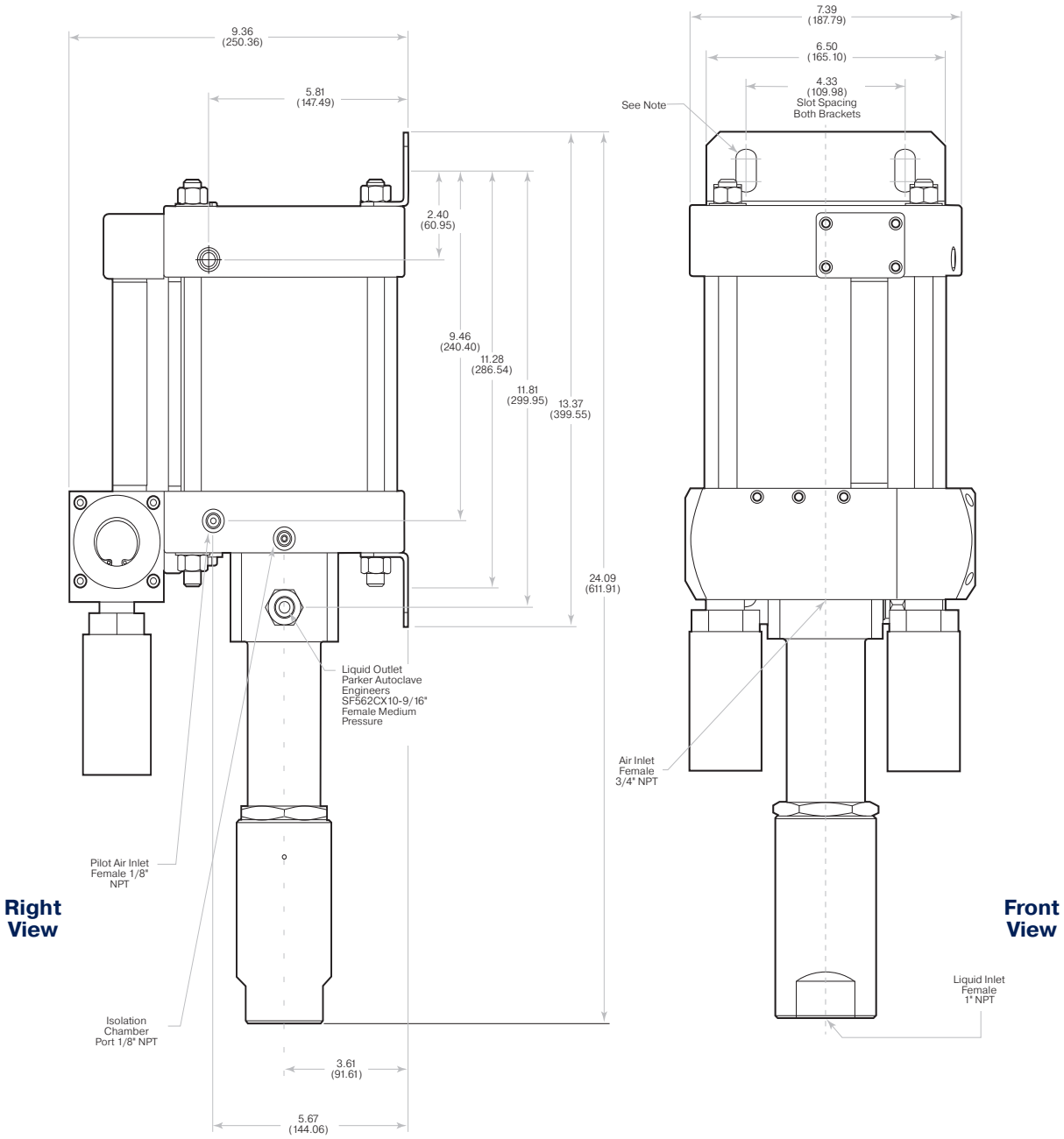

Note:

- Each Mounting Bracket includes (2) 9/16" (14.29) holes for 1/2" Bolts.
- All dimensions are for reference only and are subject to change without notice.
- Primary Dimensions: Inches
- Secondary Dimensions: (Millimeters)

Tel: +45 63 12 83 00 | Email: ps@hymatik.com | www.hymatik.com | Hvidkaervej 27a, DK-5250 Odense SV, Denmark

AHL SERIES Double-Acting, Double Piston Air Drive

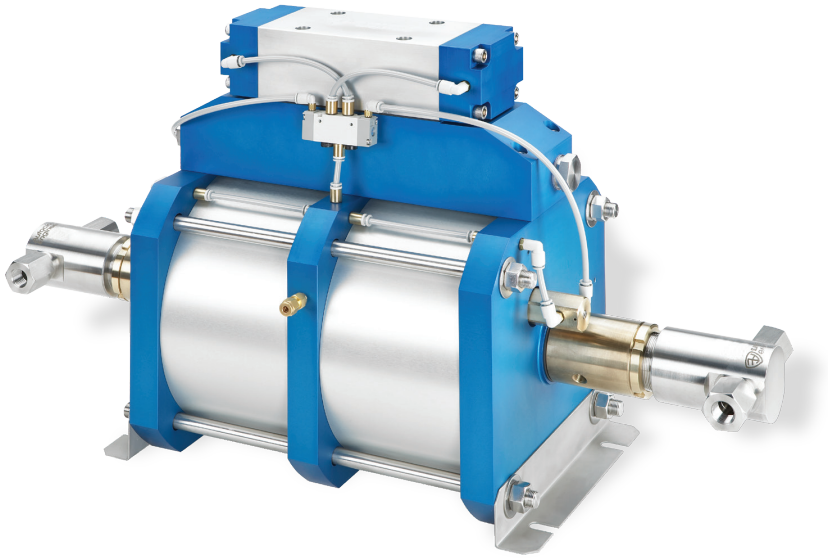

Features:

- Pressure Ranges from 6,700 to 22,500 psi (460 to 1550 bar) max
- Operating Temperature Range: 0° to 140°F (-18° to 60°C)
- Pressure Head Material: 15-5 PH Stainless Steel
- Plunger: Stainless Steel, coated w/proprietary multi-layer carbon for long life
- Liquid Side Material: All Stainless-Steel Construction
- Air Side Material: Anodized Aluminum

Technical Data:

- Liquid Connections: Dual Side Inlet Only – see chart (page 20)
- Isolation Chamber: Standard on all sizes
- Displacement per stroke: See chart (page 20)
- Liquid Seals: Thermoplastic Polyester U-Cup w/ optional o-rings (see P/N matrix)
- Air Drive Pressure Range: 20-100 psi (1.5-7 bar) * See Note
- Main Air Inlet: 1" FNPT (Regulated)
- Pilot Air Inlet: 1/8" FNPT (unregulated)
- Exhaust Port (muffler removed) 1" BSP
- Max Air Consumption: 290 SCFM @ 50 psi (no pressure)
- Pre-Lubricated Piston at Factory
- Air Seals: Buna-N

Note: *Maximum air drive pressure is limited by maximum pressure

Tel: +45 63 12 83 00 | Email: ps@hymatik.com | www.hymatik.com | Hvidkaervej 27a, DK-5250 Odense SV, Denmark

AHL Pump Part Number Matrix

Typical catalog number: **AHL66-2DSCTV**



Pump Type / Size / Ratio

AHL =
- High Flow, Liquid High Pressure Pump
- 10" Dual Piston Air Drive
- Air-to-Liquid Pressure Ratio:
  AHL33-2D - 1:67
  AFL66-2D - 1:133
  AFL118-2D - 1:239

Liquid Inlet Location

S = Side

Isolation Chamber

C = Included

Liquid Seal Materials

TV = Thermoplastic Polyester U-Cup and FKM O-Rings

TB = Thermoplastic Polyester U-Cup and Buna-N O-Rings

TC = Thermoplastic Polyester U-Cup and Perfluoroelastomer FFKM O-Rings

Note: Individual Pump Specifications can be found at www.Autoclave.com.

Reference Guide

Catalog Number	Pressure Ratio	Maximum Rated Outlet Pressure PSI (bar)	Displacement Per Cycle .in³ (cm³)	Liquid Connections	
				Inlet	Outlet
AHL33-2DSCXX	1:67	6,700 (462)	15.3 (250.7)	1" FNPT	1/2" FNPT
AHL66-2DSCXX	1:133	13,300 (917)	7.8 (127.8)	1/2" FNPT	1/2" FNPT
AHL118-2DSCXX	1:239	22,500 (1551)	4.4 (72.1)	1/2" FNPT	SF562CX

Liquid Flow Rate vs. Outlet Pressure: AHL33-2DSC Series

Approximate Air Drive Pressure: 100 psi			
Pressure (PSI)	Pressure (bar)	Flow (gpm)	Flow (liter/min)
0	0	7.6* (see note 2)	28.8* (see note 2)
1000	69	6.1	23.0
2000	138	5.7	21.5
3000	207	4.9	18.4
4000	276	4.0	15.2
5000	345	3.2	12.3
6000	414	1.8	6.9

Nominal Liquid Pressure (Stalled)			
Air Drive Pressure		Liquid Pressure	
PSI	bar	PSI	bar
20	1.4	1340	92.4
30	2.1	2010	138.6
40	2.8	2680	184.8
50	3.4	3350	231.0
60	4.1	4020	277.2
70	4.8	4690	323.4
80	5.5	5360	369.6
90	6.2	6030	415.8
100	6.9	6700	461.9

Tel: +45 63 12 83 00 | Email: ps@hymatik.com | www.hymatik.com | Hvidkaervej 27a, DK-5250 Odense SV, Denmark

Liquid Flow Rate vs. Outlet Pressure: AHL66-2DSC Series

Approximate Air Drive Pressure: 100 psi			
Pressure (PSI)	Pressure (bar)	Flow (gpm)	Flow (liter/min)
0	0	3.6* (see note 2)	13.7* (see note 2)
1000	69	3.4	12.9
2000	138	3.1	12.0
3000	207	2.9	11.2
4000	276	2.7	10.3
5000	345	2.5	9.5
6000	414	2.3	8.7
7000	483	2.2	8.2
8000	552	2.0	7.7
9000	621	1.8	6.7
10000	690	1.5	5.7
11000	759	1.3	4.8
12000	828	1.0	3.9

Nominal Liquid Pressure (Stalled)			
Air Drive Pressure		Liquid Pressure	
PSI	bar	PSI	bar
20	1.4	2660	183.4
30	2.1	3990	275.2
40	2.8	5320	366.9
50	3.4	6650	458.6
60	4.1	7980	550.3
70	4.8	9310	642.1
80	5.5	10640	733.8
90	6.2	11970	825.5
100	6.9	13300	917.2

Liquid Flow Rate vs. Outlet Pressure: AHL118-2DSC Series

Approximate Air Drive Pressure: 100 psi			
Pressure (PSI)	Pressure (bar)	Flow (gpm)	Flow (liter/min)
0	0	2.0	7.7
2000	138	1.8	6.9
4000	276	2.0	6.3
6000	414	1.5	5.8
8000	552	1.4	5.4
10000	689	1.3	5.1
12000	827	1.2	4.7
14000	965	1.1	4.3
16000	1103	1.0	3.8
18000	1241	0.8	3.1
20000	1379	0.6	2.3
22500	1551	0.2	0.8

Nominal Liquid Pressure (Stalled)			
Air Drive Pressure		Liquid Pressure	
PSI	bar	PSI	bar
20	1.4	4780	329.6
30	2.1	7170	494.4
40	2.8	9560	659.1
50	3.4	11950	823.9
60	4.1	14340	988.7
70	4.8	16730	1153.5
80	5.5	19120	1318.3
90	6.2	21510	1483.1
95	6.6	22500	1551.3

Note:
1. Actual flow rates will vary depending on air flow capacity, downstream flow restrictions, and fluid type.
2. Flow valve at approximately 50 psi air drive pressure.

Air Drive Connection

All AHL series pumps have a 1" FNPT regulated main air drive supply connection and utilize a 1/8" FNPT unregulated pilot port connection for remote start/stop operation. It is recommended to operate the pilot port at a higher air pressure than the main air drive supply pressure for proper function.

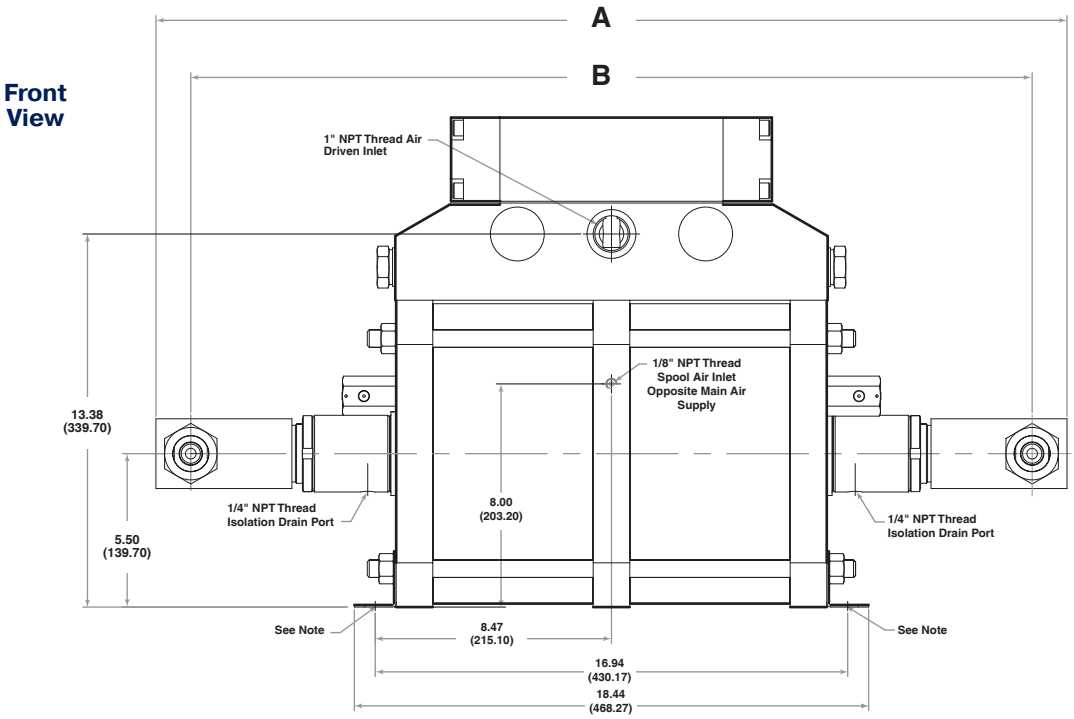

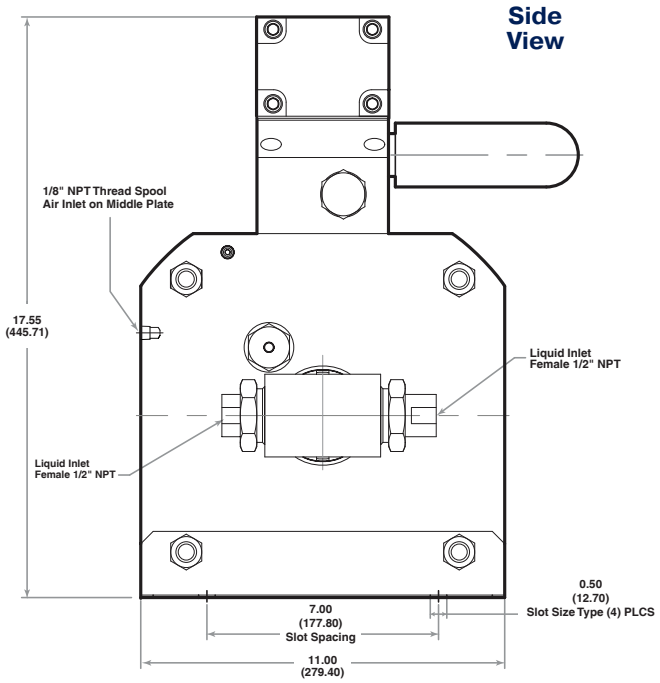

Model	A	B
AHL33	32.41 (823.21)	30.42 (772.41)
AHL66	32.66 (829.61)	30.16 (766.11)
AHL118	32.66 (829.61)	30.16 (766.11)

Note:

- Each Mounting Bracket includes (2) 9/16" (14.29) holes for 1/2" Bolts.
- All dimensions are for reference only and are subject to change without notice.
- Primary Dimensions: Inches
- Secondary Dimensions: (Millimeters)

Tel: +45 63 12 83 00 | Email: ps@hymatik.com | www.hymatik.com | Hvidkaervej 27a, DK-5250 Odense SV, Denmark

air-driven liquid pumps data sheets

Tel: +45 63 12 83 00 | Email: ps@hymatik.com | www.hymatik.com | Hvidkaervej 27a, DK-5250 Odense SV, Denmark

hymatik



Air-Driven, High Flow, High Pressure Liquid Pumps

Technical & Performance Data Sheet Digest

Manual: **02-9277BE** | February 2022

Parker

ENGINEERING YOUR SUCCESS.

Tel: +45 63 12 83 00 | Email: ps@hymatik.com | www.hymatik.com | Hvidkaervej 27a, DK-5250 Odense SV, Denmark

Parker Instrumentation Products Divison (IPD)

Live Chat Support is available from **www.parker.com/IPD** when the Chat icon " " is visible on screen.

Table of Contents Page

ASL Pumps (Single-Acting, Single and Dual Piston Air Drive)

ASL10-01 4
ASL25-01 8
ASL35-01 12
ASL35-02 16
ASL60-01 20
ASL60-02 24
ASL100-01 28
ASL100-02 32
ASL150-01 36
ASL150-02 40
ASL250-01 44
ASL400-01 48
ASL400-02 52

ACHL Pumps (Single-Acting, Single Piston Air Drive with Hand Lever)

ACHL72-01 57
ACHL189-01 61

AHL Pumps (Double-Acting, Dual Piston Air Drive)

AHL33-2D 66
AHL66-2D 70
AHL118-2D 74

AFL Pumps (Double-Acting, Single Ended Piston Air Drive)

AFL35-1D 79
AFL60-1D 83
AFL100-1D 87

Available Pump Accessories

- Relief Valve / Safety Head
- Complete line of High Pressure Components - Valves, Fittings, Tubing
- Spare Parts

⚠ WARNING

FAILURE, IMPROPER SELECTION OR IMPROPER USE OF THE PRODUCTS AND/OR SYSTEMS DESCRIBED HEREIN OR RELATED ITEMS CAN CAUSE DEATH, PERSONAL INJURY AND PROPERTY DAMAGE.

This document and other information from Parker Hannifin Corporation, its subsidiaries and authorized distributors provide product and/or system options for further investigation by users having technical expertise. It is important that you analyze all aspects of your application and review the information concerning the product or system in the current product catalog.

Due to the variety of operating conditions and applications for these products or systems, the user, through its own analysis and testing, is solely responsible for making the final selection of the products and systems and assuring that all performance, safety and warning requirements of the application are met.

The products described herein, including without limitation, product features, specifications, designs, availability and pricing, are subject to change by Parker Hannifin Corporation and its subsidiaries at any time without notice.

ALL PARKER VALVES MUST PASS A RIGID OPERATIONAL AND LEAKAGE TEST BEFORE LEAVING THE FACTORY. IT IS RECOMMENDED AFTER ANY REASSEMBLY, THE VALVE SHOULD BE TESTED BY THE USER FOR OPERATION AND LEAKAGE. IF THESE INSTRUCTIONS ARE NOT FULLY COMPLIED WITH, THE REPAIRED PRODUCT MAY FAIL AND CAUSE DAMAGE TO PROPERTY OR INJURY TO PERSONS. PARKER HANNIFIN CANNOT ASSUME RESPONSIBILITY FOR PERFORMANCE OF A CUSTOMER SERVICED VALVE.

Tel: +45 63 12 83 00 | Email: ps@hymatik.com | www.hymatik.com | Hvidkaervej 27a, DK-5250 Odense SV, Denmark

hymatik

ASL

Series ASL

Tel: +45 63 12 83 00 | Email: ps@hymatik.com | www.hymatik.com | Hvidkaervej 27a, DK-5250 Odense SV, Denmark

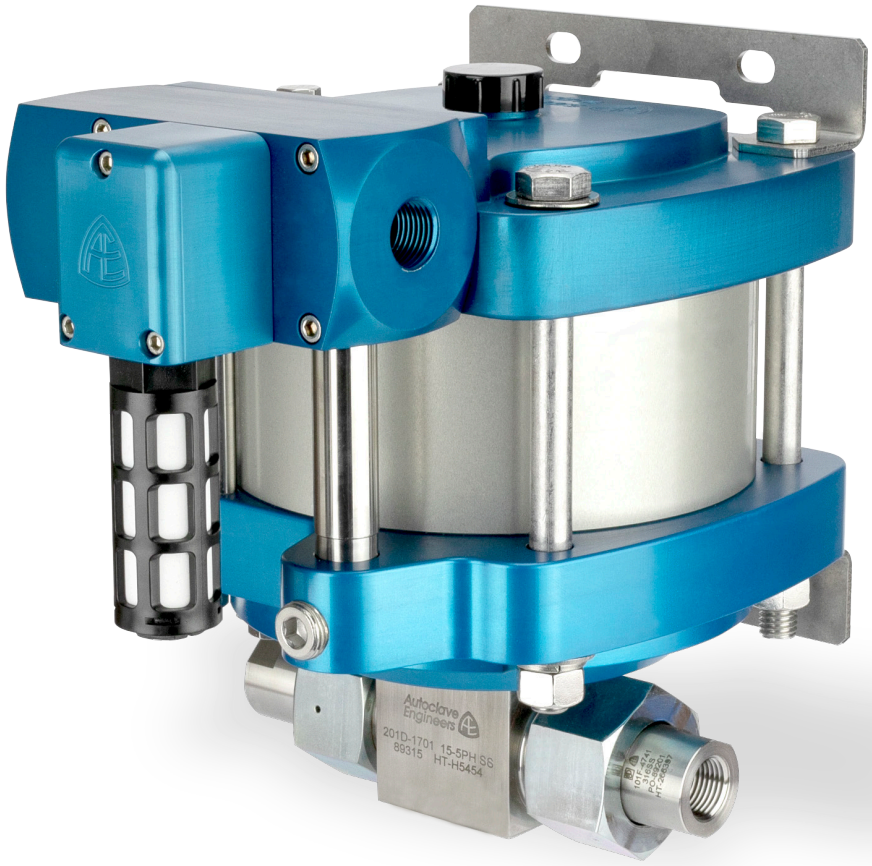

Series ASL10-01 (Single-Acting, Single Piston Air Drive)

Air-Driven, High Flow, High Pressure Liquid Pump

Technical & Performance Data Sheet

Manual: **02-9244BE** | January 2022

Parker

ENGINEERING YOUR SUCCESS.

Technical Data

Section 1.0
Liquid Side Specifications

Service: Oil, Water or Water/Oil mixture and other fluids depending on material compatibility

Maximum Outlet Pressure: 1,600 psi (110 bar)

Air to Liquid Pressure Ratio: 1:11

Volume Displacement Per Stroke: 5.22 in^3 (85.5 cm^3)

Inlet Connection: 1" FNPT

Outlet Connection: 1/2" FNPT Female NPT

Section 2.0
Air Side Specifications

Air Drive Pressure Range: 15-150 psi (1-10 bar)* **(Note)**

Nominal Air Pressure Required: 1,600 psi (110 bar)
Output Pressure: 145 psi (10 bar)

Inlet Port: 1/2" FNPT

Pilot Port: 1/8" FNPT (unregulated air)

Exhaust Port (muffler removed): 1/2" FNPT

Air Consumption @ 90 psi: 69 SCFM

Prelubricated at Factory

***Note:** Maximum air drive pressure is limited by maximum output pressure.

Section 3.0
General Specifications

Maximum Operating Temperature: 0-140° F (-18° to 60° C)

Net Weight: 38 lbs. (17.2 kg)

Pressure Head: 15-5 PH Stainless Steel

Plunger Description: Stainless steel plunger utilizing a proprietary multi-layer carbon based coating with diamond like carbon exterior layer - 3 times the hardness of stellite with a coefficient of friction equal to/less than PTFE

Check Valve Glands: 316 Stainless Steel

Liquid Seal: UHMWPE U-Cup and FKM O-Rings

Air Drive Seals: Buna N

Tel: +45 63 12 83 00 | Email: ps@hymatik.com | www.hymatik.com | Hvidkaervej 27a, DK-5250 Odense SV, Denmark

General Information

Section 4.0 - Ordering Guide

For complete information on available pump options, contact Parker Autoclave Engineers.

Typical catalog number: **ASL10-01SNPV**

ASL10-01	S	N	PV
Pump Type / Size / Ratio	**Liquid Inlet Location**	**Isolation Chamber**	**Liquid Seal Materials†**
ASL = • Standard Liquid High Flow, High Pressure Pump • 6" Single Piston Air Drive • 1:11 Air-to-Liquid Pressure Ratio • Maximum 1,600 psi (110 bar)	* **S** = Side	* **N** = None	**PV** = UHMWPE U-Cup and FKM O-Rings

Section 5.0 - Flow Rate vs. Outlet Pressure

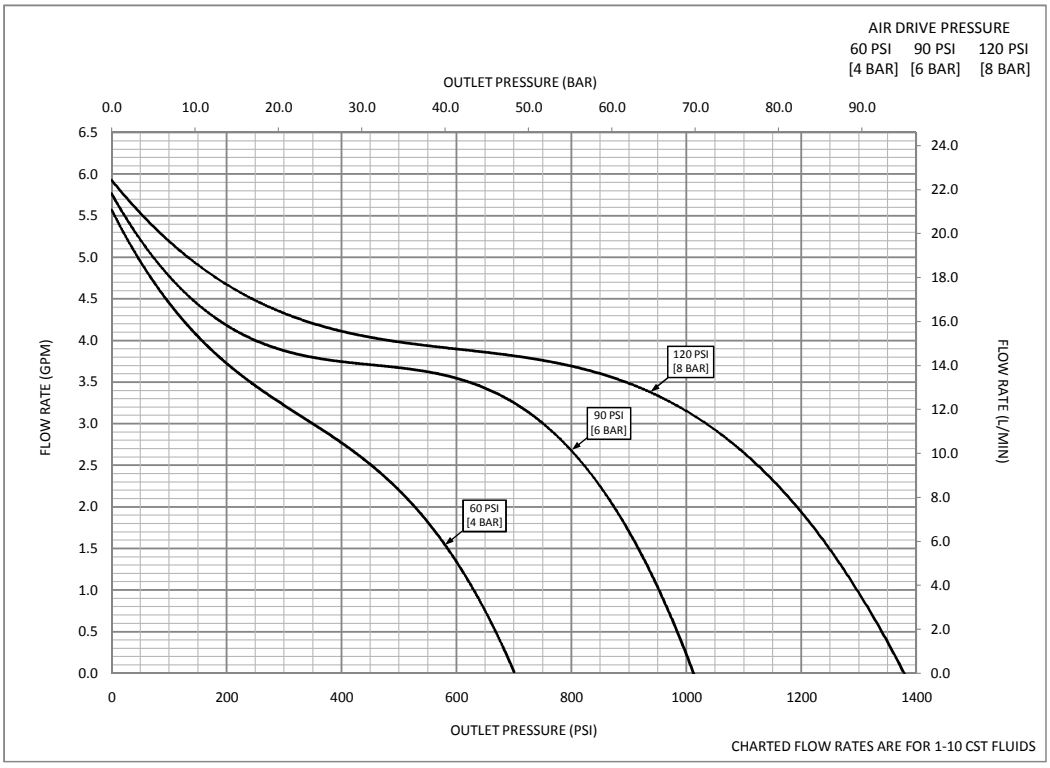

Actual flow rates will vary depending on air flow capacity, downstream flow restrictions, and fluid type.

Tel: +45 63 12 83 00 | Email: ps@hymatik.com | www.hymatik.com | Hvidkaervej 27a, DK-5250 Odense SV, Denmark

General Information

Section 6.0 - Dimensional Data

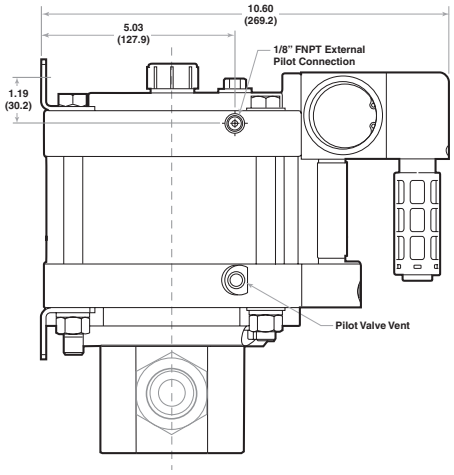

Left View

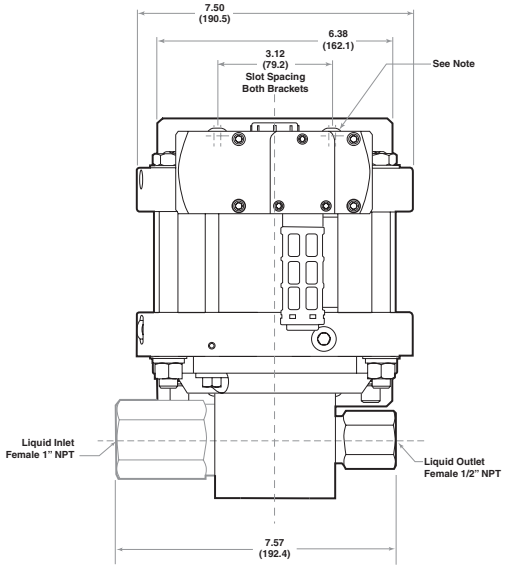

Front View

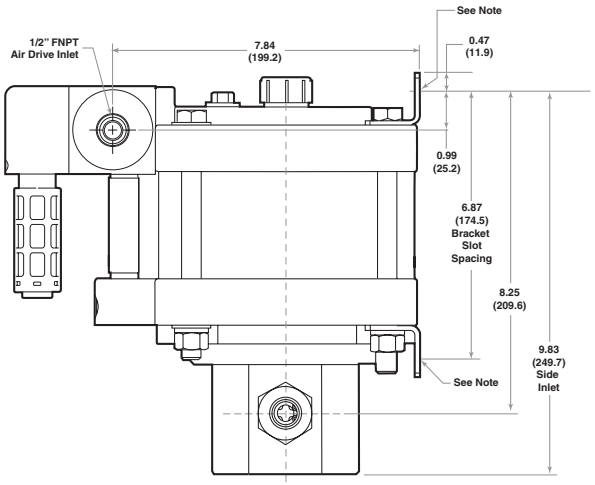

Right View

Note:

Each Mounting Bracket includes (2) x 13/32" (10.32) Slots for 3/8" Bolts.

All dimensions are for reference only and are subject to change without notice.

Primary Dimensions: Inches

Secondary Dimensions: (Millimeters)

Tel: +45 63 12 83 00 | Email: ps@hymatik.com | www.hymatik.com | Hvidkaervej 27a, DK-5250 Odense SV, Denmark

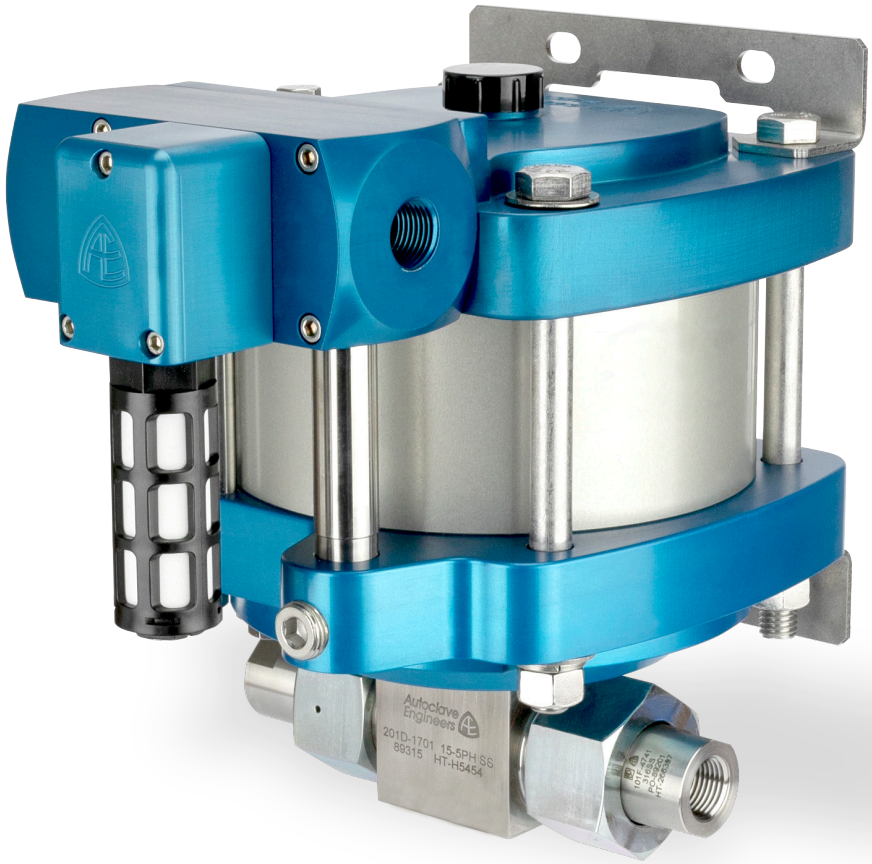

Series ASL25-01 (Single-Acting, Single Piston Air Drive)

Air-Driven, High Flow, High Pressure Liquid Pump

Technical & Performance Data Sheet

Manual: **02-9251BE** | January 2022

Parker

ENGINEERING YOUR SUCCESS.

Technical Data

Section 1.0
Liquid Side Specifications

Service: Oil, Water or Water/Oil mixture and other fluids depending on material compatibility

Maximum Outlet Pressure: 4,000 psi (276 bar)

Air to Liquid Pressure Ratio: 1:28

Volume Displacement Per Stroke: 2.10 in^3 (34.4 cm^3)

Inlet Connection: 1/2" FNPT

Outlet Connection: 1/2" FNPT Female NPT

Section 2.0
Air Side Specifications

Air Drive Pressure Range: 15-150 psi (1-10 bar)* **(Note)**

Nominal Air Pressure Required: 4,000 psi (276 bar)
Output Pressure: 143 psi (9.9 bar)

Inlet Port: 1/2" FNPT

Pilot Port: 1/8" FNPT (unregulated air)

Exhaust Port (muffler removed): 1/2" FNPT

Air Consumption @ 90 psi: 69 SCFM

Prelubricated at Factory

***Note:** Maximum air drive pressure is limited by maximum output pressure.

Section 3.0
General Specifications

Maximum Operating Temperature: 0-140° F (-18° to 60° C)

Net Weight: 38 lbs. (17.2 kg)

Pressure Head: 15-5 PH Stainless Steel

Plunger Description: Stainless steel plunger utilizing a proprietary multi-layer carbon based coating with diamond like carbon exterior layer - 3 times the hardness of stellite with a coefficient of friction equal to/less than PTFE

Check Valve Glands: 316 Stainless Steel

Liquid Seal: UHMWPE U-Cup and FKM O-Rings

Air Drive Seals: Buna N

Tel: +45 63 12 83 00 | Email: ps@hymatik.com | www.hymatik.com | Hvidkaervej 27a, DK-5250 Odense SV, Denmark

General Information

Section 4.0 - Ordering Guide

For complete information on available pump options, contact Parker Autoclave Engineers.

Typical catalog number: **ASL25-01SNPV**

ASL25-01	S	N	PV
Pump Type / Size / Ratio	**Liquid Inlet Location**	**Isolation Chamber**	**Liquid Seal Materials†**
ASL = • Standard Liquid High Flow, High Pressure Pump • 6" Single Piston Air Drive • 1:28 Air-to-Liquid Pressure Ratio • Maximum 4,000 psi (276 bar)	* **S** = Side	* **N** = None	**PV** = UHMWPE U-Cup and FKM O-Rings

Section 5.0 - Flow Rate vs. Outlet Pressure

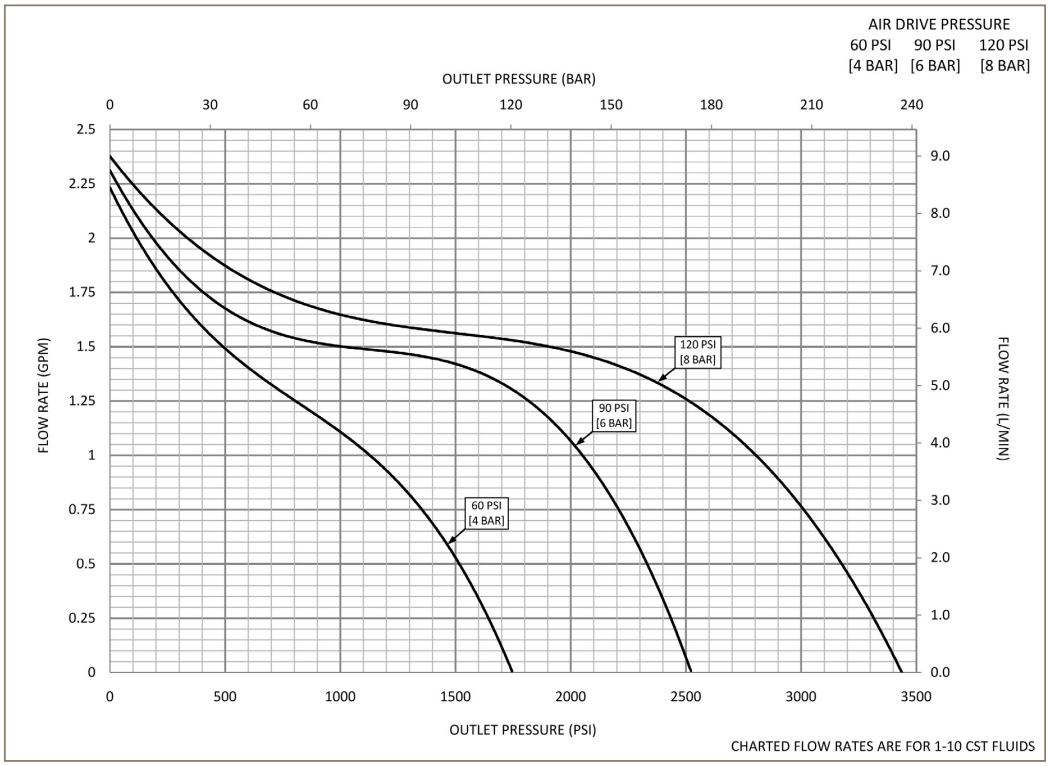

Actual flow rates will vary depending on air flow capacity, downstream flow restrictions, and fluid type.

Tel: +45 63 12 83 00 | Email: ps@hymatik.com | www.hymatik.com | Hvidkaervej 27a, DK-5250 Odense SV, Denmark

Section 6.0 - Dimensional Data

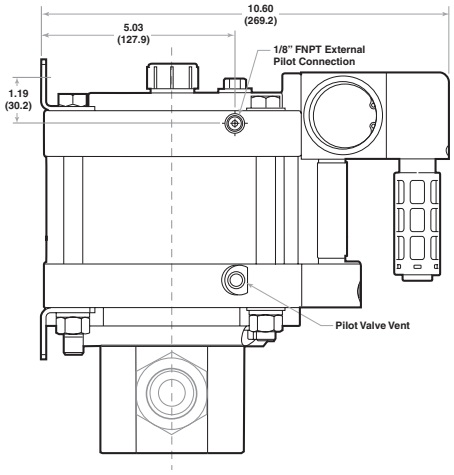

Left View

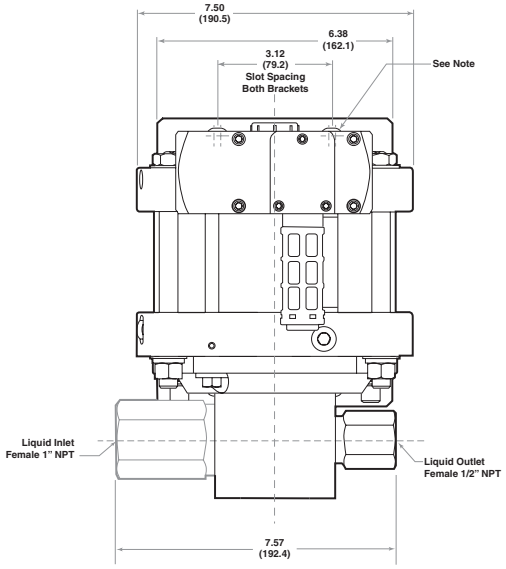

Front View

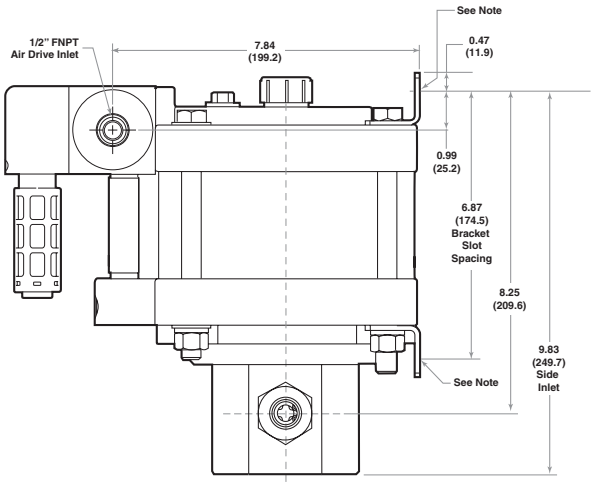

Right View

Note:

Each Mounting Bracket includes (2) x 13/32" (10.32) Slots for 3/8" Bolts.

All dimensions are for reference only and are subject to change without notice.

Primary Dimensions: Inches

Secondary Dimensions: (Millimeters)

Tel: +45 63 12 83 00 | Email: ps@hymatik.com | www.hymatik.com | Hvidkaervej 27a, DK-5250 Odense SV, Denmark

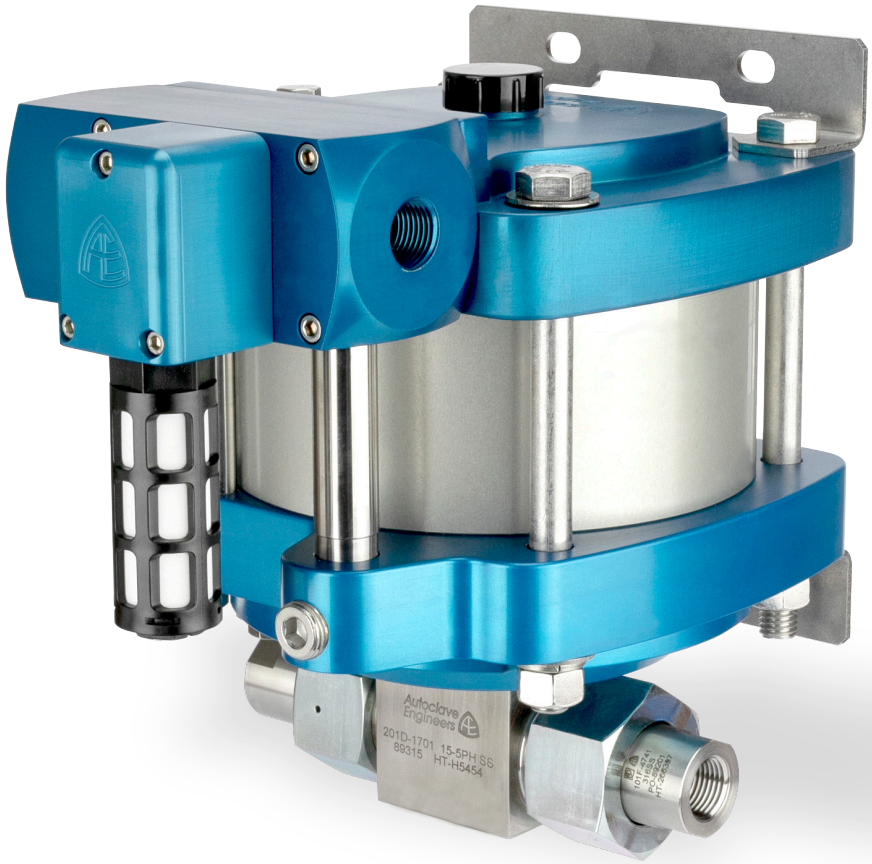

Series ASL35-01 (Single-Acting, Single Piston Air Drive)

Air-Driven, High Flow, High Pressure Liquid Pump

Technical & Performance Data Sheet

Manual: **02-9257BE** | January 2022

Parker

ENGINEERING YOUR SUCCESS.

Technical Data

Section 1.0
Liquid Side Specifications

Service: Oil, Water or Water/Oil mixture and other fluids depending on material compatibility

Maximum Outlet Pressure: 5,600 psi (386 bar)

Air to Liquid Pressure Ratio: 1:39

Volume Displacement Per Stroke: 1.50 in^3 (24.6 cm^3)

Inlet Connection: 1/2" FNPT

Outlet Connection: 1/2" FNPT Female NPT

Section 2.0
Air Side Specifications

Air Drive Pressure Range: 15-150 psi (1-10 bar)* **(Note)**

Nominal Air Pressure Required: 5,600 psi (386 bar)
Output Pressure: 143 psi (9.9 bar)

Inlet Port: 1/2" FNPT

Pilot Port: 1/8" FNPT (unregulated air)

Exhaust Port (muffler removed): 1/2" FNPT

Air Consumption @ 90 psi: 63 SCFM

Prelubricated at Factory

***Note:** Maximum air drive pressure is limited by maximum output pressure.

Section 3.0
General Specifications

Maximum Operating Temperature: 0-140° F (-18° to 60° C)

Net Weight: 38 lbs. (17.2 kg)

Pressure Head: 15-5 PH Stainless Steel

Plunger Description: Stainless steel plunger utilizing a proprietary multi-layer carbon based coating with diamond like carbon exterior layer - 3 times the hardness of stellite with a coefficient of friction equal to/less than PTFE

Check Valve Glands: 316 Stainless Steel

Liquid Seal: UHMWPE U-Cup and FKM O-Rings

Air Drive Seals: Buna N

Tel: +45 63 12 83 00 | Email: ps@hymatik.com | www.hymatik.com | Hvidkaervej 27a, DK-5250 Odense SV, Denmark

General Information

Section 4.0 - Ordering Guide

For complete information on available pump options, contact Parker Autoclave Engineers.

Typical catalog number: **ASL35-01SNPV**

ASL35-01	S	N	PV
Pump Type / Size / Ratio	**Liquid Inlet Location**	**Isolation Chamber**	**Liquid Seal Materials†**
ASL = • Standard Liquid High Flow, High Pressure Pump • 6" Single Piston Air Drive • 1:39 Air-to-Liquid Pressure Ratio • Maximum 5,600 psi (386 bar)	* **S** = Side	* **N** = None	**PV** = UHMWPE U-Cup and FKM O-Rings

Section 5.0 - Flow Rate vs. Outlet Pressure

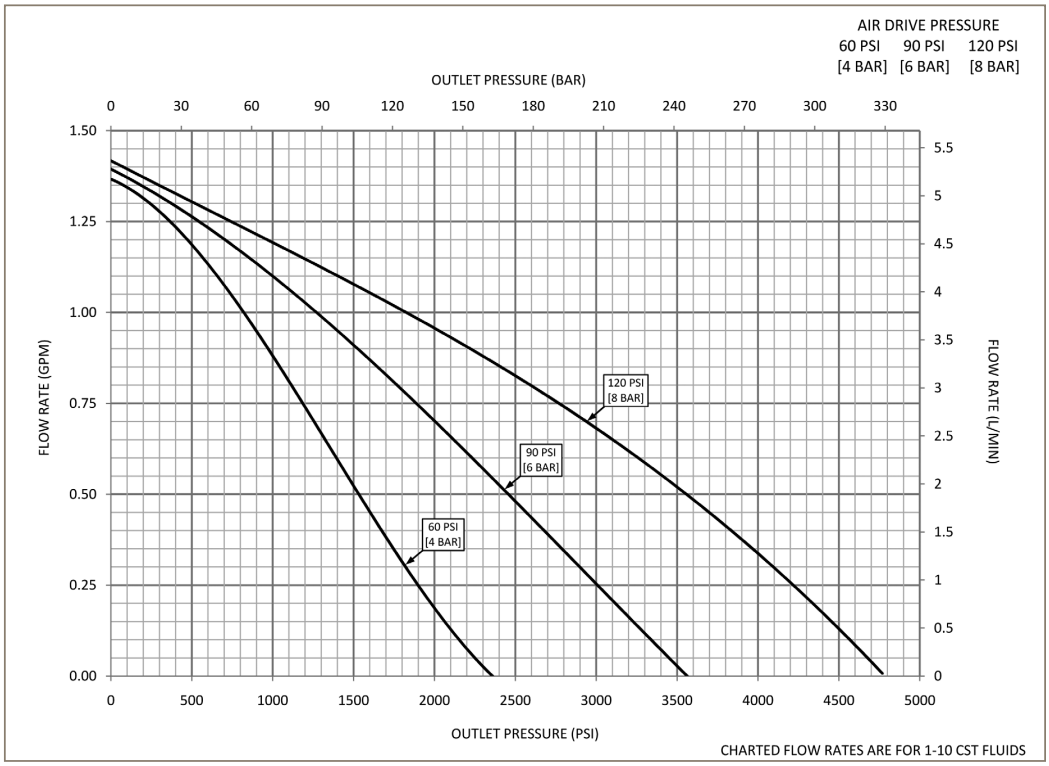

Actual flow rates will vary depending on air flow capacity, downstream flow restrictions, and fluid type.

Tel: +45 63 12 83 00 | Email: ps@hymatik.com | www.hymatik.com | Hvidkaervej 27a, DK-5250 Odense SV, Denmark

General Information

Section 6.0 - Dimensional Data

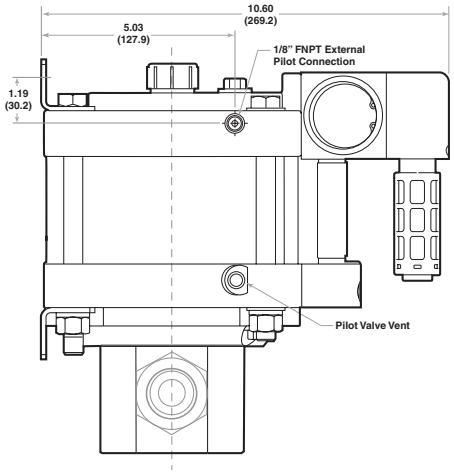

Left View

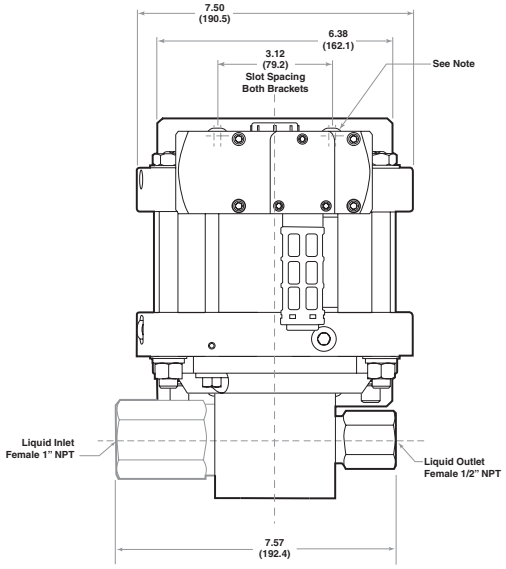

Front View

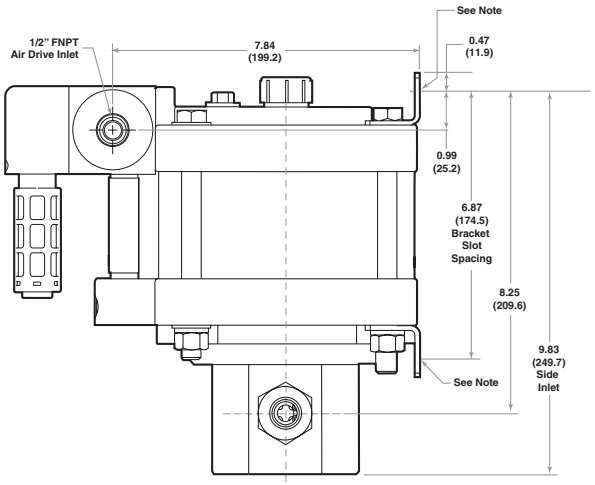

Right View

Note:

Each Mounting Bracket includes (2) x 13/32" (10.32) Slots for 3/8" Bolts.

All dimensions are for reference only and are subject to change without notice.

Primary Dimensions: Inches

Secondary Dimensions: (Millimeters)

Tel: +45 63 12 83 00 | Email: ps@hymatik.com | www.hymatik.com | Hvidkaervej 27a, DK-5250 Odense SV, Denmark

hymatik



Series ASL35-02 (Single-Acting, Dual Piston Air Drive)

Air-Driven, High Flow, High Pressure Liquid Pump

Technical & Performance Data Sheet

Manual: **02-9262BE** | February 2022

Parker

ENGINEERING YOUR SUCCESS.

Tel: +45 63 12 83 00 | Email: ps@hymatik.com | www.hymatik.com | Hvidkaervej 27a, DK-5250 Odense SV, Denmark

Technical Data

Section 1.0
Liquid Side Specifications

Service: Oil, Water or Water/Oil mixture and other fluids depending on material compatibility

Maximum Outlet Pressure: 11,200 psi (772 bar)

Air to Liquid Pressure Ratio: 1:78

Volume Displacement Per Stroke: 1.50 in^3 (24.6 cm^3)

Inlet Connection: 1/2" FNPT

Outlet Connection: 1/2" FNPT Female NPT

Section 2.0
Air Side Specifications

Air Drive Pressure Range: 15-150 psi (1-10 bar)* **(Note)**

Nominal Air Pressure Required: 11,200 psi (772 bar)
Output Pressure: 143 psi (9.9 bar)

Inlet Port: 1/2" FNPT

Pilot Port: 1/8" FNPT (unregulated air)

Exhaust Port (muffler removed): 1/2" FNPT

Air Consumption @ 90 psi: 56 SCFM

Prelubricated at Factory

***Note:** Maximum air drive pressure is limited by maximum output pressure.

Section 3.0
General Specifications

Maximum Operating Temperature: 0-140° F (-18° to 60° C)

Net Weight: 46 lbs. (20.9 kg)

Pressure Head: 15-5 PH Stainless Steel

Plunger Description: Stainless steel plunger utilizing a proprietary multi-layer carbon based coating with diamond like carbon exterior layer - 3 times the hardness of stellite with a coefficient of friction equal to/less than PTFE

Check Valve Glands: 316 Stainless Steel

Liquid Seal: UHMWPE U-Cup and FKM O-Rings

Air Drive Seals: Buna N

Tel: +45 63 12 83 00 | Email: ps@hymatik.com | www.hymatik.com | Hvidkaervej 27a, DK-5250 Odense SV, Denmark

General Information

Section 4.0 - Ordering Guide

For complete information on available pump options, contact Parker Autoclave Engineers.

Typical catalog number: **ASL35-02SNPV**

ASL35-02	S	N	PV
Pump Type / Size / Ratio	**Liquid Inlet Location**	**Isolation Chamber**	**Liquid Seal Materials†**
ASL = • Standard Liquid High Flow, High Pressure Pump • 6" Dual Piston Air Drive • 1:78 Air-to-Liquid Pressure Ratio • Maximum 11,200 psi (772 bar)	* **S** = Side	* **N** = None	**PV** = UHMWPE U-Cup and FKM O-Rings

Section 5.0 - Flow Rate vs. Outlet Pressure

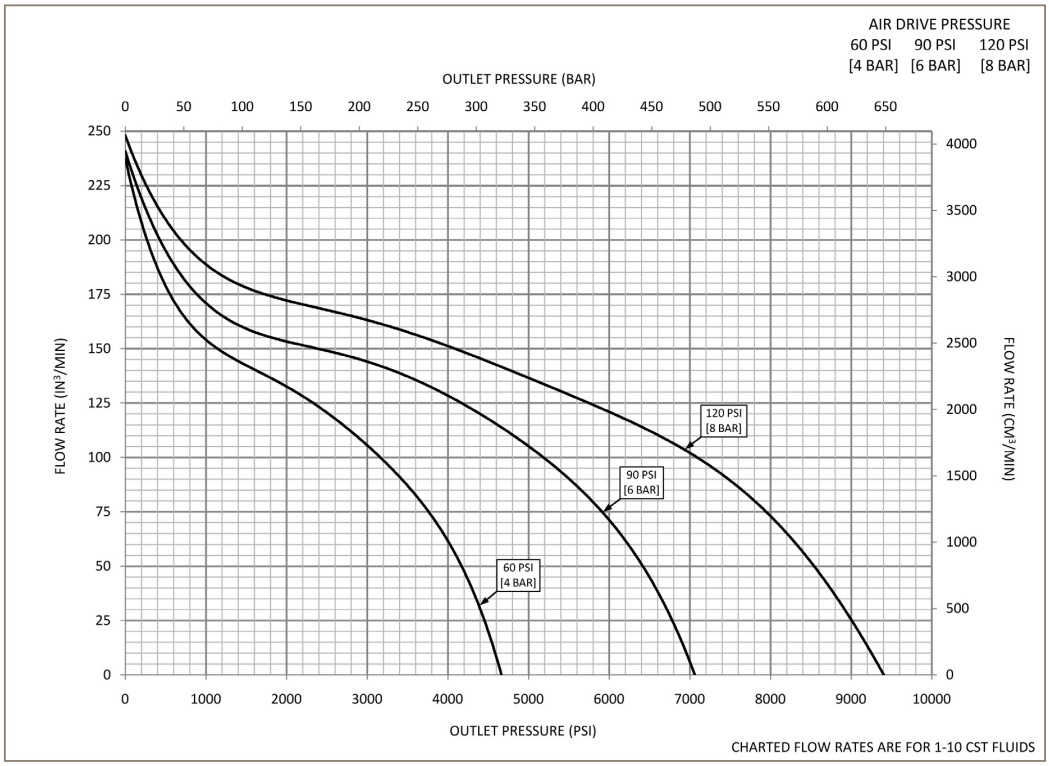

Actual flow rates will vary depending on air flow capacity, downstream flow restrictions, and fluid type.

Tel: +45 63 12 83 00 | Email: ps@hymatik.com | www.hymatik.com | Hvidkaervej 27a, DK-5250 Odense SV, Denmark

Section 6.0 - Dimensional Data

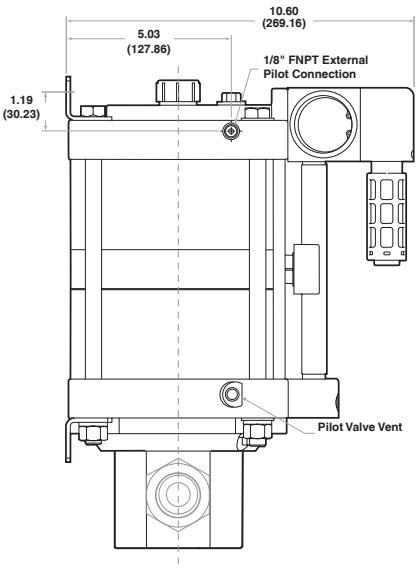

Left View

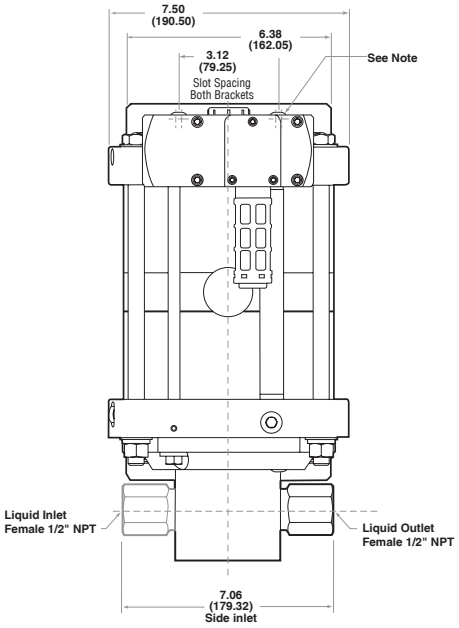

Front View

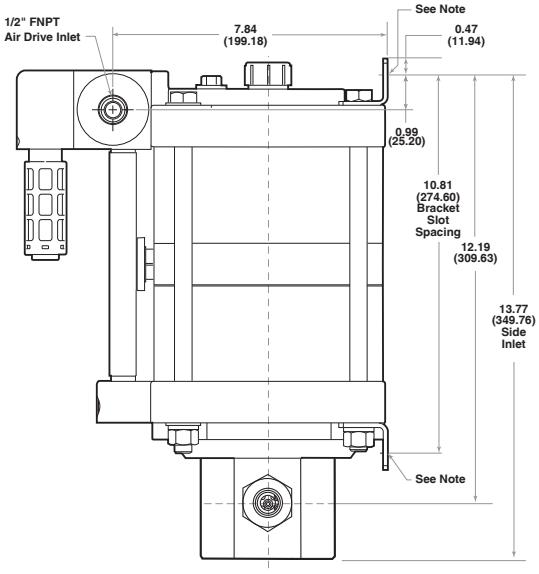

Right View

Note:

Each Mounting Bracket includes (2) x 13/32" (10.32) Slots for 3/8" Bolts.

All dimensions are for reference only and are subject to change without notice.

Primary Dimensions: Inches

Secondary Dimensions: (Millimeters)

Tel: +45 63 12 83 00 | Email: ps@hymatik.com | www.hymatik.com | Hvidkaervej 27a, DK-5250 Odense SV, Denmark

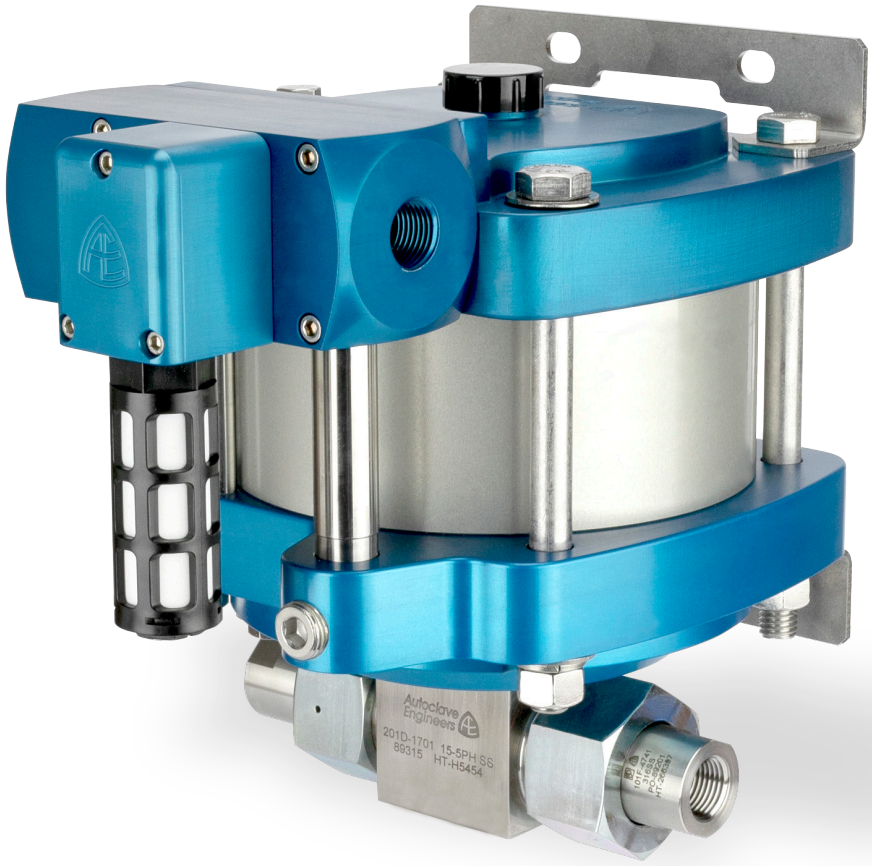

Series ASL60-01 (Single-Acting, Single Piston Air Drive)

Air-Driven, High Flow, High Pressure Liquid Pump

Technical & Performance Data Sheet

Manual: **02-9252BE** | January 2022

Parker

ENGINEERING YOUR SUCCESS.

Technical Data

Section 1.0
Liquid Side Specifications

Service: Oil, Water or Water/Oil mixture and other fluids depending on material compatibility

Maximum Outlet Pressure: 10,000 psi (690 bar)

Air to Liquid Pressure Ratio: 1:70

Volume Displacement Per Stroke: 0.84 in^3 (13.7 cm^3)

Inlet Connection: 1/2" FNPT

Outlet Connection: 1/2" FNPT Female NPT

Section 2.0
Air Side Specifications

Air Drive Pressure Range: 15-150 psi (1-10 bar)* **(Note)**

Nominal Air Pressure Required: 10,000 psi (690 bar)
Output Pressure: 143 psi (9.9 bar)

Inlet Port: 1/2" FNPT

Pilot Port: 1/8" FNPT (unregulated air)

Exhaust Port (muffler removed): 1/2" FNPT

Air Consumption @ 90 psi: 64 SCFM

Prelubricated at Factory

***Note:** Maximum air drive pressure is limited by maximum output pressure.

Section 3.0
General Specifications

Maximum Operating Temperature: 0-140° F (-18° to 60° C)

Net Weight: 32 lbs. (14.5 kg)

Pressure Head: 15-5 PH Stainless Steel

Plunger Description: Stainless steel plunger utilizing a proprietary multi-layer carbon based coating with diamond like carbon exterior layer - 3 times the hardness of stellite with a coefficient of friction equal to/less than PTFE

Check Valve Glands: 316 Stainless Steel

Liquid Seal: UHMWPE U-Cup and FKM O-Rings

Air Drive Seals: Buna N

Tel: +45 63 12 83 00 | Email: ps@hymatik.com | www.hymatik.com | Hvidkaervej 27a, DK-5250 Odense SV, Denmark

General Information

Section 4.0 - Ordering Guide

For complete information on available pump options, contact Parker Autoclave Engineers.

Typical catalog number: **ASL60-01SNP**

ASL60-01	S	N	P
Pump Type / Size / Ratio	**Liquid Inlet Location**	**Isolation Chamber**	**Liquid Seal Materials†**
ASL = • Standard Liquid High Flow, High Pressure Pump • 6" Single Piston Air Drive • 1:70 Air-to-Liquid Pressure Ratio • Maximum 10,000 psi (690 bar)	***S** = Side	***N** = None	**P** = UHMWPE U-Cup with Elgiloy Spring Energizer

Section 5.0 - Flow Rate vs. Outlet Pressure

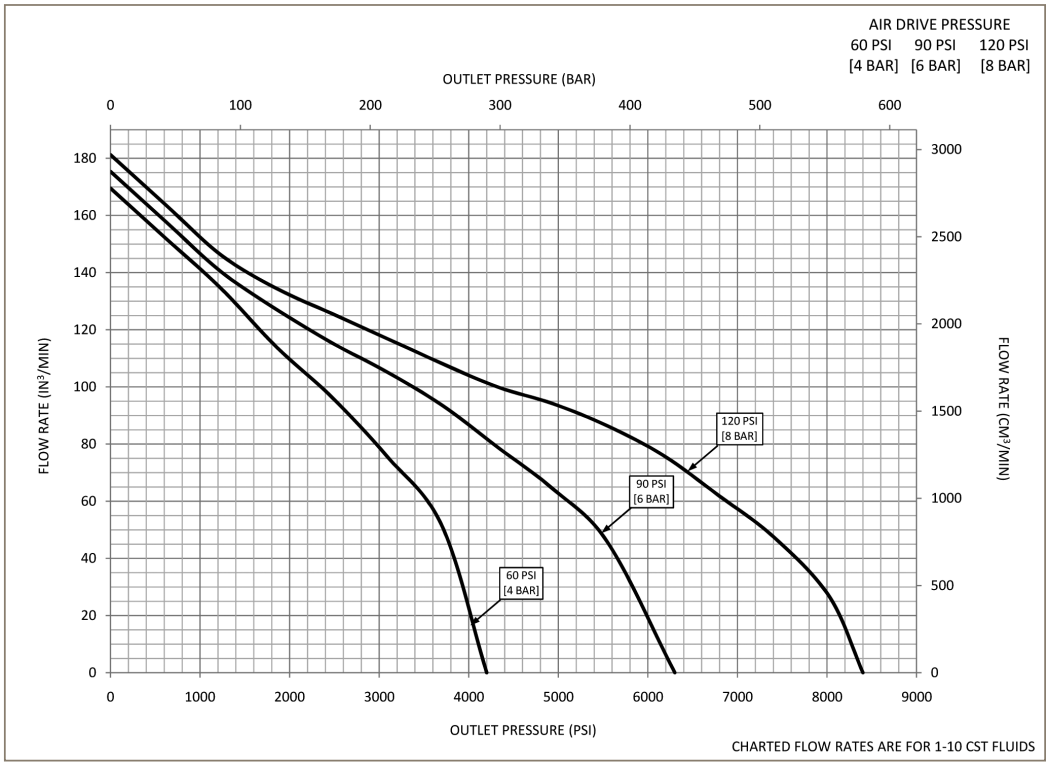

Actual flow rates will vary depending on air flow capacity, downstream flow restrictions, and fluid type.

Tel: +45 63 12 83 00 | Email: ps@hymatik.com | www.hymatik.com | Hvidkaervej 27a, DK-5250 Odense SV, Denmark

General Information

Section 6.0 - Dimensional Data

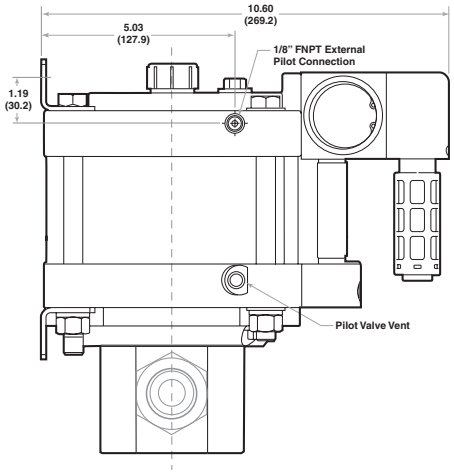

Left View

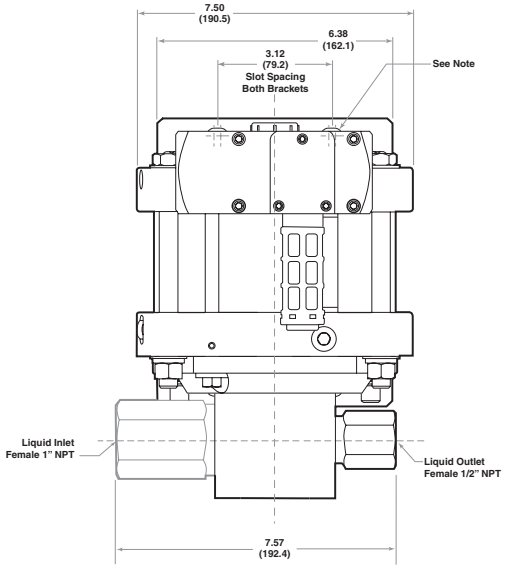

Front View

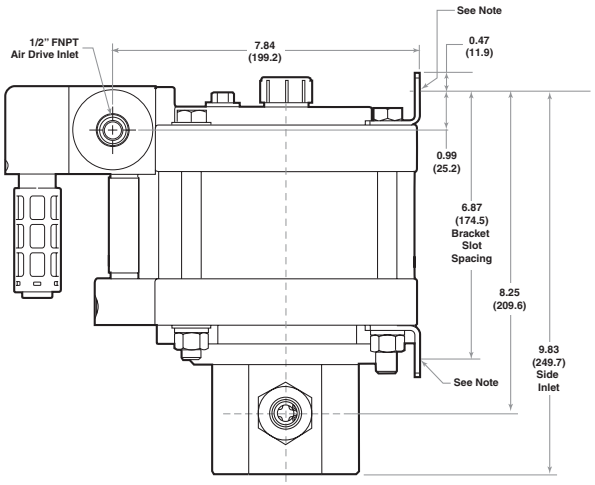

Right View

Note:

Each Mounting Bracket includes (2) x 13/32" (10.32) Slots for 3/8" Bolts.

All dimensions are for reference only and are subject to change without notice.

Primary Dimensions: Inches

Secondary Dimensions: (Millimeters)

Tel: +45 63 12 83 00 | Email: ps@hymatik.com | www.hymatik.com | Hvidkaervej 27a, DK-5250 Odense SV, Denmark



Series ASL60-02 (Single-Acting, Dual Piston Air Drive)

Air-Driven, High Flow, High Pressure Liquid Pump

Technical & Performance Data Sheet

Manual: **02-9264BE** | February 2022

Parker

ENGINEERING YOUR SUCCESS.

Technical Data

Section 1.0
Liquid Side Specifications

Service: Oil, Water or Water/Oil mixture and other fluids depending on material compatibility

Maximum Outlet Pressure: 20,000 psi (1379 bar)

Air to Liquid Pressure Ratio: 1:140

Volume Displacement Per Stroke: 0.84 in^3 (13.8 cm^3)

Inlet Connection: 1/2" FNPT

Outlet Connection: Parker Autoclave SF562CX20-9/16" Female Medium Pressure

Section 2.0
Air Side Specifications

Air Drive Pressure Range: 15-150 psi (1-10 bar)* **(Note)**

Nominal Air Pressure Required: 20,000 psi (1379 bar)
Output Pressure: 143 psi (9.9 bar)

Inlet Port: 1/2" FNPT

Pilot Port: 1/8" FNPT (unregulated air)

Exhaust Port (muffler removed): 1/2" FNPT

Air Consumption @ 90 psi: 59 SCFM

Prelubricated at Factory

***Note:** Maximum air drive pressure is limited by maximum output pressure.

Section 3.0
General Specifications

Maximum Operating Temperature: 0-140° F (-18° to 60° C)

Net Weight: 43 lbs. (19.5 kg)

Pressure Head: 15-5 PH Stainless Steel

Plunger Description: Stainless steel plunger utilizing a proprietary multi-layer carbon based coating with diamond like carbon exterior layer - 3 times the hardness of stellite with a coefficient of friction equal to/less than PTFE

Check Valve Glands: 316 Stainless Steel (SS)

Liquid Seal: UHMWPE U-Cup with SS Spring Energizer

Air Drive Seals: Buna N

Tel: +45 63 12 83 00 | Email: ps@hymatik.com | www.hymatik.com | Hvidkaervej 27a, DK-5250 Odense SV, Denmark

General Information

Section 4.0 - Ordering Guide

For complete information on available pump options, contact Parker Autoclave Engineers.

Typical catalog number: **ASL60-02SNPV**

ASL60-02	S	N	PV
Pump Type / Size / Ratio	**Liquid Inlet Location**	**Isolation Chamber**	**Liquid Seal Materials†**
ASL = • Standard Liquid High Flow, High Pressure Pump • 6" Dual Piston Air Drive • 1:140 Air-to-Liquid Pressure Ratio • Maximum 20,000 psi (1379 bar)	* **S** = Side	* **N** = None	**PV** = UHMWPE U-Cup with Elgiloy Spring Energizer

Section 5.0 - Flow Rate vs. Outlet Pressure

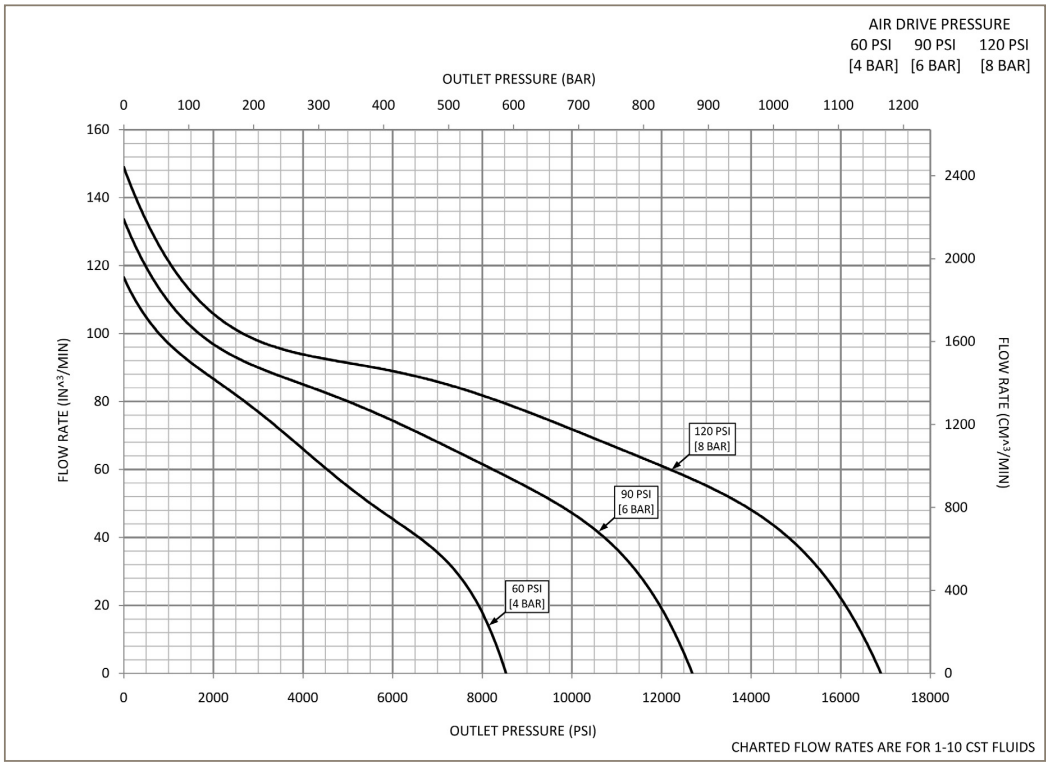

Actual flow rates will vary depending on air flow capacity, downstream flow restrictions, and fluid type.

Tel: +45 63 12 83 00 | Email: ps@hymatik.com | www.hymatik.com | Hvidkaervej 27a, DK-5250 Odense SV, Denmark

Section 6.0 - Dimensional Data

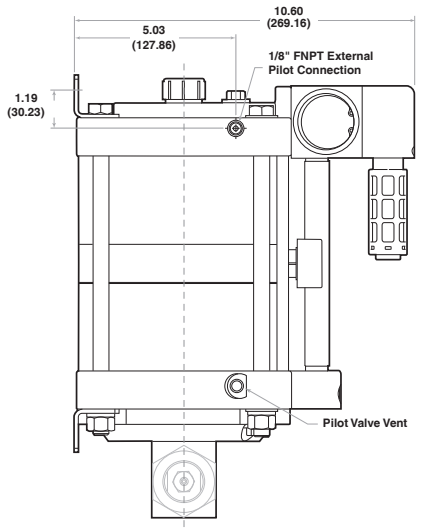

Left View

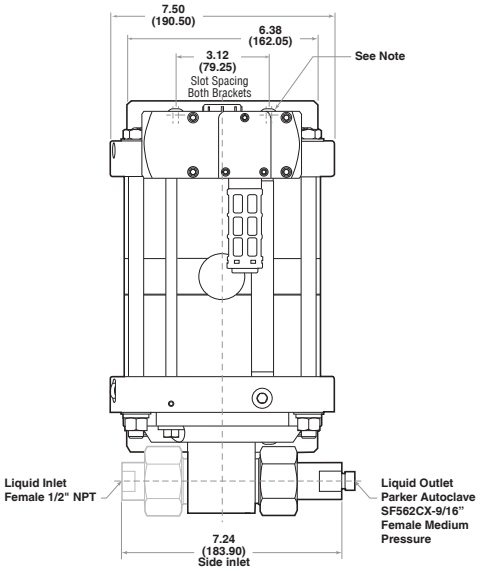

Front View

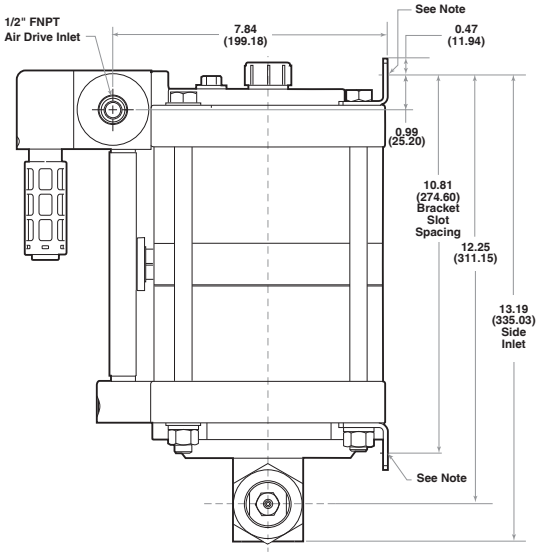

Right View

Note:

Each Mounting Bracket includes (2) x 13/32" (10.32) Slots for 3/8" Bolts.

All dimensions are for reference only and are subject to change without notice.

Primary Dimensions: Inches

Secondary Dimensions: (Millimeters)

Tel: +45 63 12 83 00 | Email: ps@hymatik.com | www.hymatik.com | Hvidkaervej 27a, DK-5250 Odense SV, Denmark

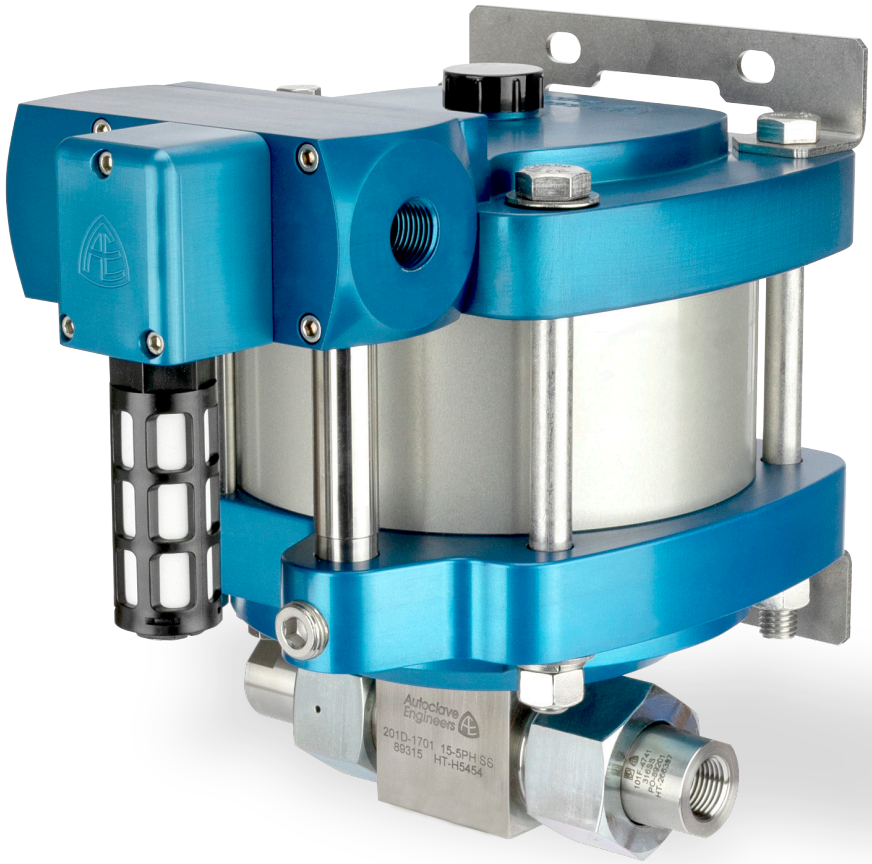

Series ASL100-01 (Single-Acting, Single Piston Air Drive)

Air-Driven, High Flow, High Pressure Liquid Pump

Technical & Performance Data Sheet

Manual: **02-9253BE** | January 2022

Parker

ENGINEERING YOUR SUCCESS.

Technical Data

Section 1.0
Liquid Side Specifications

Service: Oil, Water or Water/Oil mixture and other fluids depending on material compatibility

Maximum Outlet Pressure: 15,000 psi (1034 bar)

Air to Liquid Pressure Ratio: 1:113

Volume Displacement Per Stroke: 0.52 in^3 (8.5 cm^3)

Inlet Connection: 1/2" FNPT

Outlet Connection: 1/2" FNPT

Section 2.0
Air Side Specifications

Air Drive Pressure Range: 15-150 psi (1-10 bar)* **(Note)**

Nominal Air Pressure Required: 15,000 psi (1034 bar)
Output Pressure: 133 psi (9.9 bar)

Inlet Port: 1/2" FNPT

Pilot Port: 1/8" FNPT (unregulated air)

Exhaust Port (muffler removed): 1/2" FNPT

Air Consumption @ 90 psi: 64 SCFM

Prelubricated at Factory

***Note:** Maximum air drive pressure is limited by maximum output pressure.

Section 3.0
General Specifications

Maximum Operating Temperature: 0-140° F (-18° to 60° C)

Net Weight: 32 lbs. (14.5 kg)

Pressure Head: 15-5 PH Stainless Steel

Plunger Description: Stainless steel plunger utilizing a proprietary multi-layer carbon based coating with diamond like carbon exterior layer - 3 times the hardness of stellite with a coefficient of friction equal to/less than PTFE

Check Valve Glands: 316 Stainless Steel (SS)

Liquid Seal: UHMWPE U-Cup with SS Spring Energizer

Air Drive Seals: Buna N

Tel: +45 63 12 83 00 | Email: ps@hymatik.com | www.hymatik.com | Hvidkaervej 27a, DK-5250 Odense SV, Denmark

General Information

Section 4.0 - Ordering Guide

For complete information on available pump options, contact Parker Autoclave Engineers.

Typical catalog number: **ASL100-01SNP**

ASL100-01	S	N	P
Pump Type / Size / Ratio	**Liquid Inlet Location**	**Isolation Chamber**	**Liquid Seal Materials†**
ASL = • Standard Liquid High Flow, High Pressure Pump • 6" Single Piston Air Drive • 1:113 Air-to-Liquid Pressure Ratio • Maximum 15,000 psi (1034 bar)	* **S** = Side	* **N** = None	**P** = UHMWPE U-Cup with Stainless Steel Spring Energizer

Section 5.0 - Flow Rate vs. Outlet Pressure

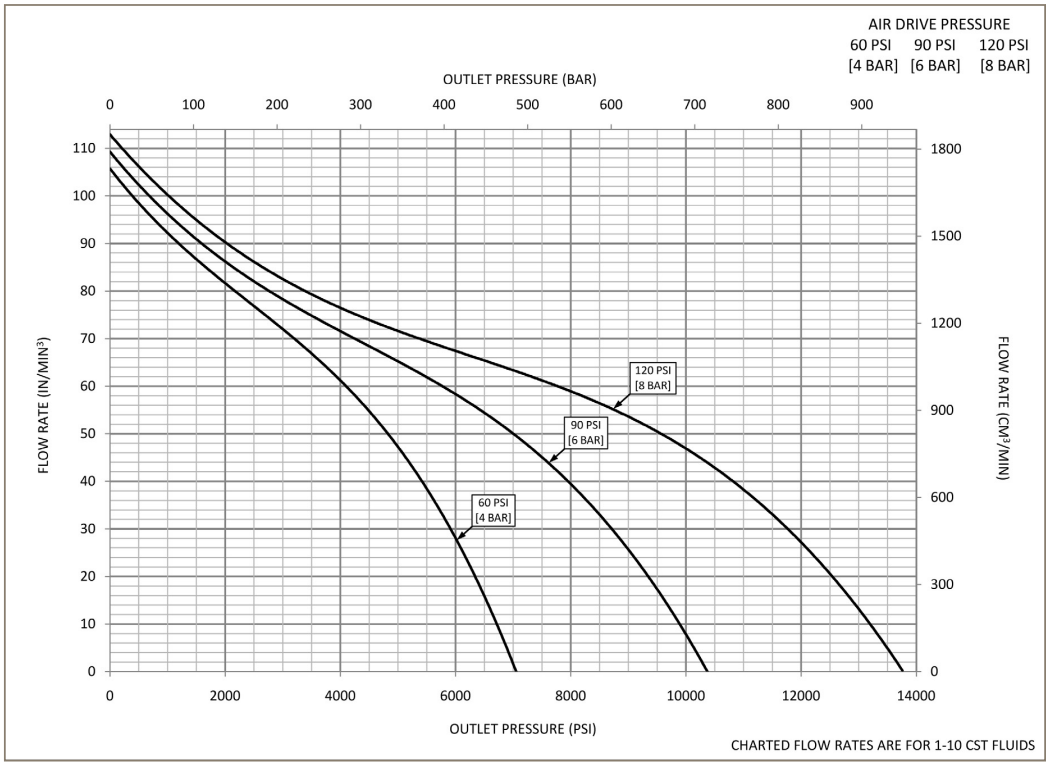

Actual flow rates will vary depending on air flow capacity, downstream flow restrictions, and fluid type.

Tel: +45 63 12 83 00 | Email: ps@hymatik.com | www.hymatik.com | Hvidkaervej 27a, DK-5250 Odense SV, Denmark

General Information

Section 6.0 - Dimensional Data

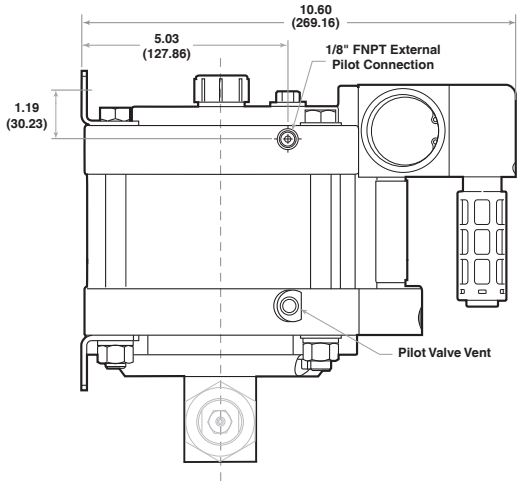

Left View

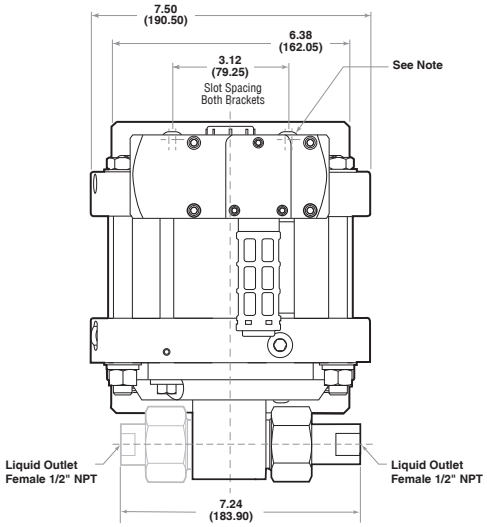

Front View

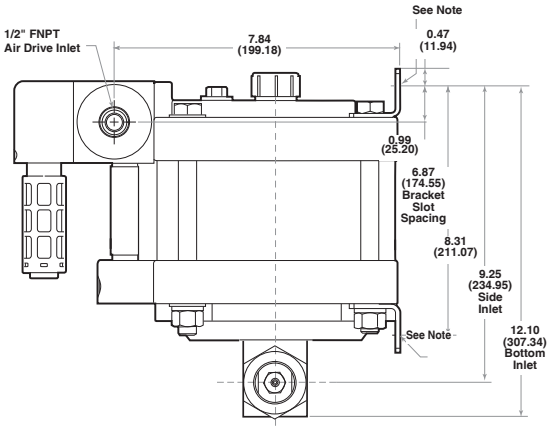

Right View

Note:

Each Mounting Bracket includes (2) x 13/32" (10.32) Slots for 3/8" Bolts.

All dimensions are for reference only and are subject to change without notice.

Primary Dimensions: Inches

Secondary Dimensions: (Millimeters)

Tel: +45 63 12 83 00 | Email: ps@hymatik.com | www.hymatik.com | Hvidkaervej 27a, DK-5250 Odense SV, Denmark



Series ASL100-02 (Single-Acting, Dual Piston Air Drive)

Air-Driven, High Flow, High Pressure Liquid Pump

Technical & Performance Data Sheet

Manual: **02-9230BE** | February 2022

Parker

ENGINEERING YOUR SUCCESS.

Technical Data

Section 1.0
Liquid Side Specifications

Service: Oil, Water or Water/Oil mixture and other fluids depending on material compatibility

Maximum Outlet Pressure: 31,000 psi (2137 bar)

Air to Liquid Pressure Ratio: 1:226

Volume Displacement Per Stroke: 0.52 in^3 (8.5 cm^3)

Inlet Connection: 1/2" FNPT

Outlet Connection: Parker Autoclave F250C-1/4" Female High Pressure

Section 2.0
Air Side Specifications

Air Drive Pressure Range: 15-150 psi (1-10 bar)* **(Note)**

Nominal Air Pressure Required: 31,000 psi (2137 bar)
Output Pressure: 137 psi (9.5 bar)

Inlet Port: 1/2" FNPT

Pilot Port: 1/8" FNPT (unregulated air)

Exhaust Port (muffler removed): 1/2" FNPT

Air Consumption @ 90 psi: 59 SCFM

Prelubricated at Factory

***Note:** Maximum air drive pressure is limited by maximum output pressure.

Section 3.0
General Specifications

Maximum Operating Temperature: 0-140° F (-18° to 60° C)

Net Weight: 42 lbs. (19.1 kg)

Pressure Head: 15-5 PH Stainless Steel

Plunger Description: Stainless steel plunger utilizing a proprietary multi-layer carbon based coating with diamond like carbon exterior layer - 3 times the hardness of stellite with a coefficient of friction equal to/less than PTFE

Check Valve Glands: 316 Stainless Steel (SS)

Liquid Seal: UHMWPE U-Cup with SS Spring Energizer

Air Drive Seals: Buna N

Tel: +45 63 12 83 00 | Email: ps@hymatik.com | www.hymatik.com | Hvidkaervej 27a, DK-5250 Odense SV, Denmark

General Information

Section 4.0 - Ordering Guide

For complete information on available pump options, contact Parker Autoclave Engineers.

Typical catalog number: **ASL100-02SNP**

ASL100-02	S	N	P
Pump Type / Size / Ratio	**Liquid Inlet Location**	**Isolation Chamber**	**Liquid Seal Materials†**
ASL = • Standard Liquid High Flow, High Pressure Pump • 6" Dual Piston Air Drive • 1:226 Air-to-Liquid Pressure Ratio • Maximum 31,000 psi (2137 bar)	***S** = Side	***N** = None	**P** = UHMWPE U-Cup with Stainless Steel Spring Energizer

Section 5.0 - Flow Rate vs. Outlet Pressure

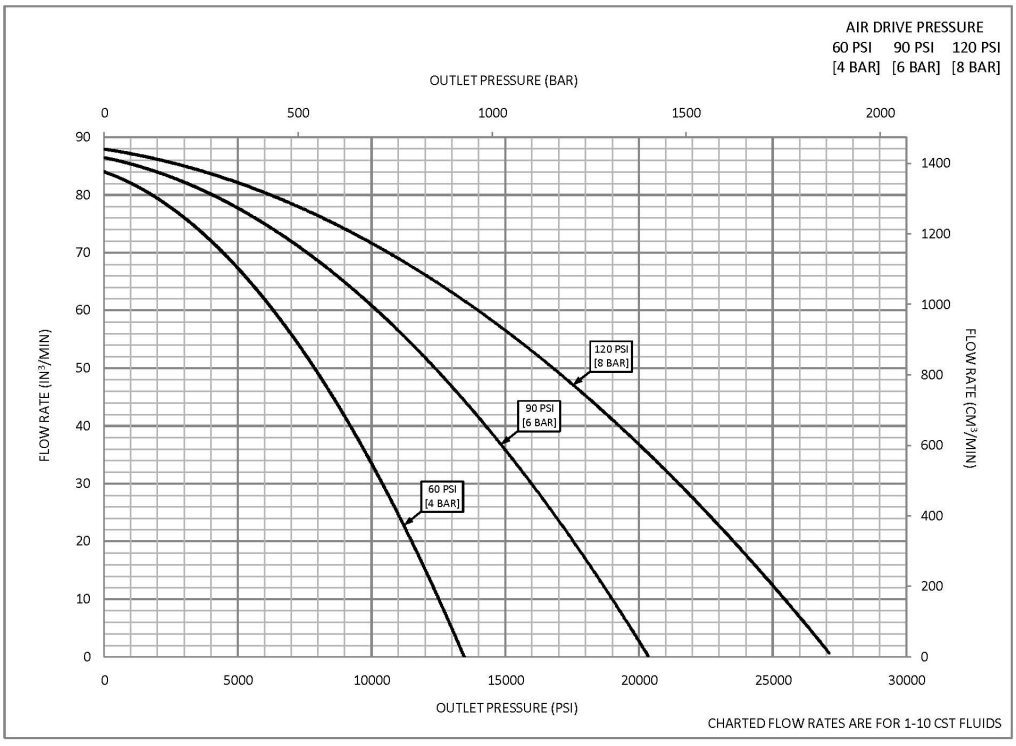

Actual flow rates will vary depending on air flow capacity, downstream flow restrictions, and fluid type.

Tel: +45 63 12 83 00 | Email: ps@hymatik.com | www.hymatik.com | Hvidkaervej 27a, DK-5250 Odense SV, Denmark

Section 6.0 - Dimensional Data

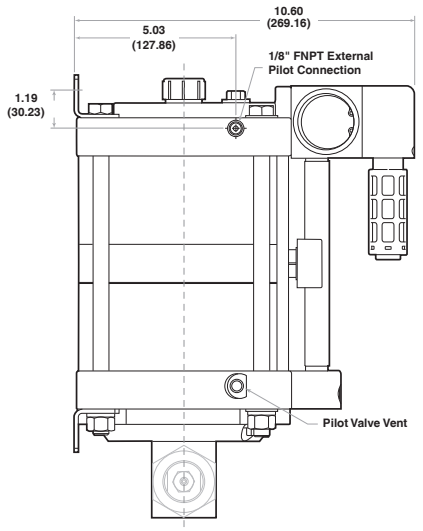

Left View

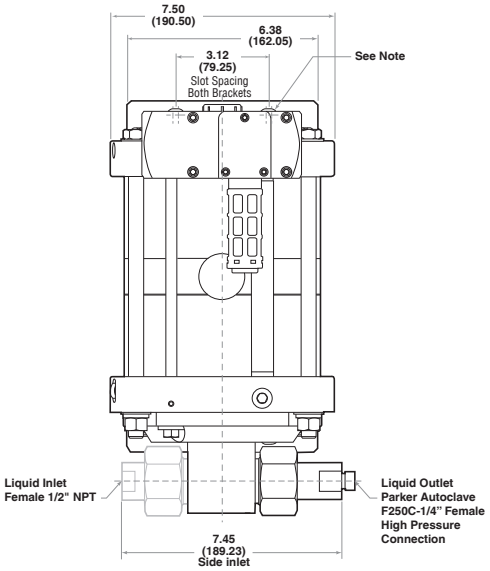

Front View

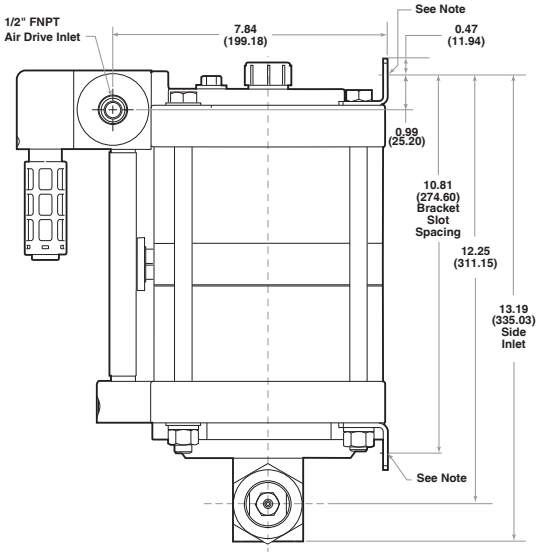

Right View

Note:

Each Mounting Bracket includes (2) x 13/32" (10.32) Slots for 3/8" Bolts.

All dimensions are for reference only and are subject to change without notice.

Primary Dimensions: Inches

Secondary Dimensions: (Millimeters)

Tel: +45 63 12 83 00 | Email: ps@hymatik.com | www.hymatik.com | Hvidkaervej 27a, DK-5250 Odense SV, Denmark

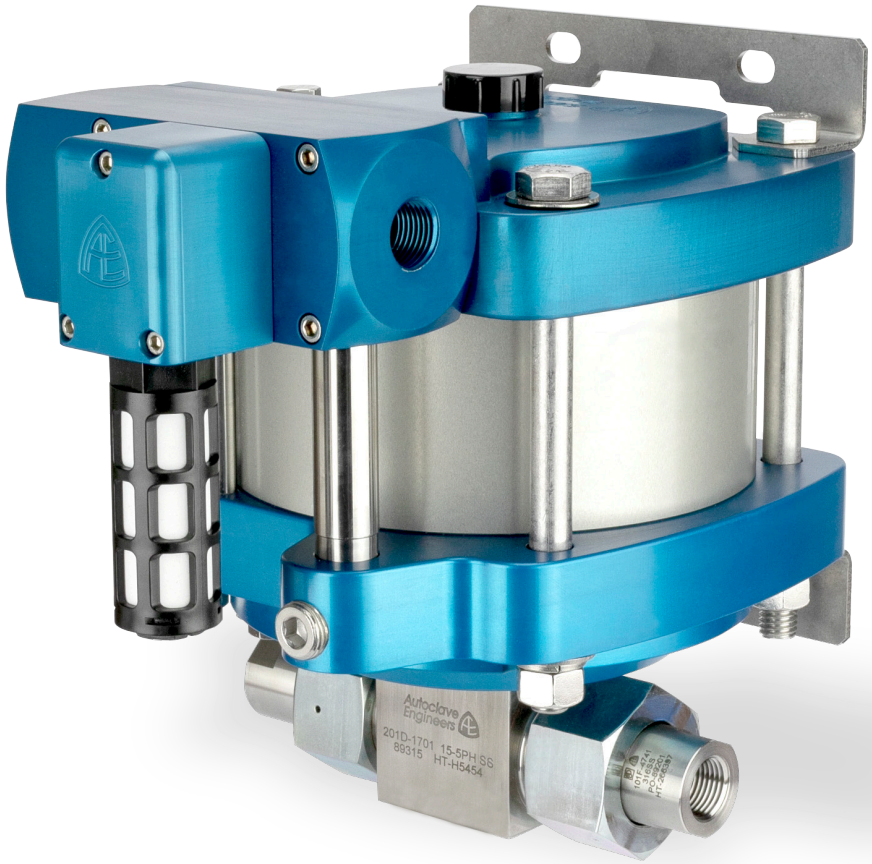

Series ASL150-01 (Single-Acting, Single Piston Air Drive)

Air-Driven, High Flow, High Pressure Liquid Pump

Technical & Performance Data Sheet

Manual: **02-9243BE** | January 2022

Parker

ENGINEERING YOUR SUCCESS.

Technical Data

Section 1.0
Liquid Side Specifications

Service: Oil, Water or Water/Oil mixture and other fluids depending on material compatibility

Maximum Outlet Pressure: 21,500 psi (1482 bar)

Air to Liquid Pressure Ratio: 1:150

Volume Displacement Per Stroke: 0.39 in^3 (6.4 cm^3)

Inlet Connection: 1/2" FNPT

Outlet Connection: Parker Autoclave F250C-1/4" Female HIgh Pressure

Section 2.0
Air Side Specifications

Air Drive Pressure Range: 15-150 psi (1-10 bar)* **(Note)**

Nominal Air Pressure Required: 21,500 psi (1482 bar)
Output Pressure: 145 psi (10 bar)

Inlet Port: 1/2" FNPT

Pilot Port: 1/8" FNPT (unregulated air)

Exhaust Port (muffler removed): 1/2" FNPT

Air Consumption @ 90 psi: 69 SCFM

Prelubricated at Factory

***Note:** Maximum air drive pressure is limited by maximum output pressure.

Section 3.0
General Specifications

Maximum Operating Temperature: 0-140° F (-18° to 60° C)

Net Weight: 32 lbs. (14.5 kg)

Pressure Head: 15-5 PH Stainless Steel

Plunger Description: Stainless steel plunger utilizing a proprietary multi-layer carbon based coating with diamond like carbon exterior layer - 3 times the hardness of stellite with a coefficient of friction equal to/less than PTFE

Check Valve Glands: 316 Stainless Steel (SS)

Liquid Seal: UHMWPE U-Cup with SS Spring Energizer

Air Drive Seals: Buna N

Tel: +45 63 12 83 00 | Email: ps@hymatik.com | www.hymatik.com | Hvidkaervej 27a, DK-5250 Odense SV, Denmark

General Information

Section 4.0 - Ordering Guide

For complete information on available pump options, contact Parker Autoclave Engineers.

Typical catalog number: **ASL150-01SNP**

ASL150-01	S	N	P
Pump Type / Size / Ratio	**Liquid Inlet Location**	**Isolation Chamber**	**Liquid Seal Materials†**
ASL = • Standard Liquid High Flow, High Pressure Pump • 6" Single Piston Air Drive • 1:150 Air-to-Liquid Pressure Ratio • Maximum 21,500 psi (1482 bar)	* **S** = Side	* **N** = None	**P** = UHMWPE U-Cup with Stainless Steel Spring Energizer

Section 5.0 - Flow Rate vs. Outlet Pressure

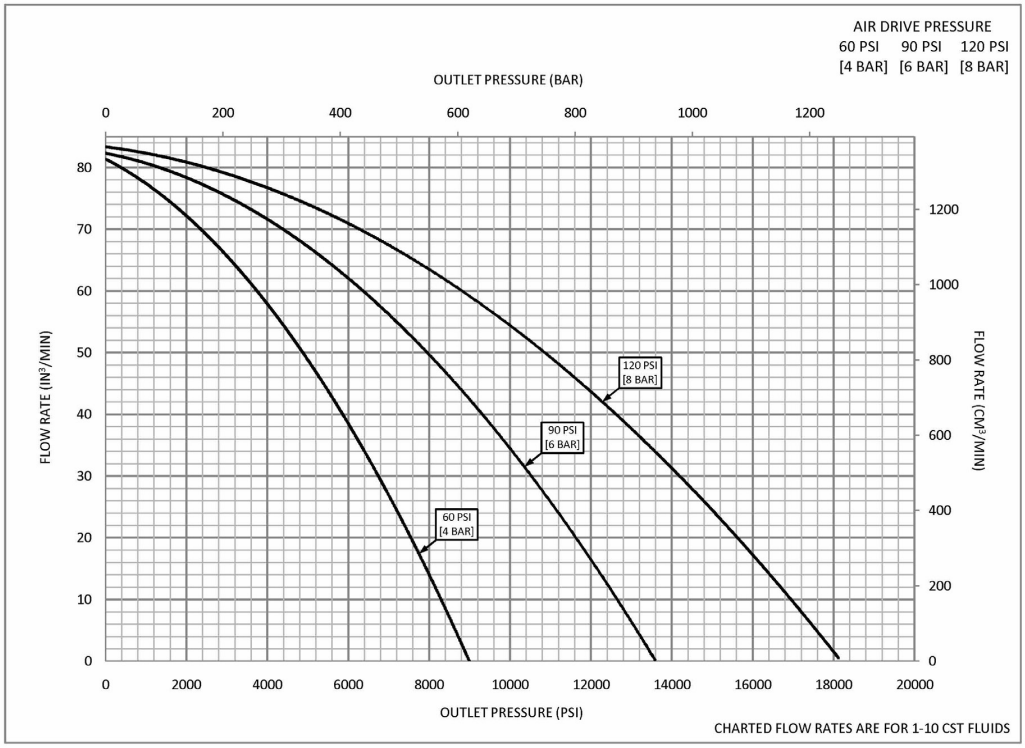

Actual flow rates will vary depending on air flow capacity, downstream flow restrictions, and fluid type.

Tel: +45 63 12 83 00 | Email: ps@hymatik.com | www.hymatik.com | Hvidkaervej 27a, DK-5250 Odense SV, Denmark

Section 6.0 - Dimensional Data

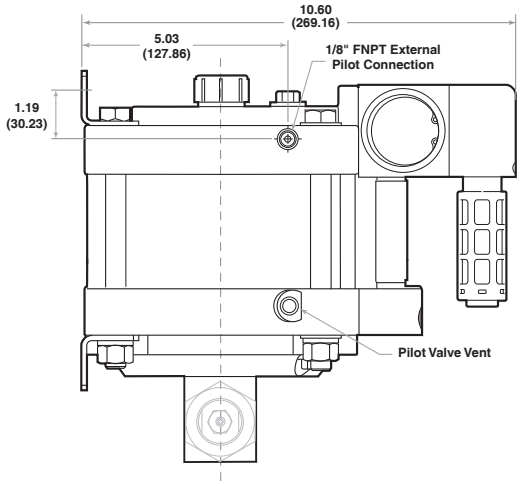

Left View

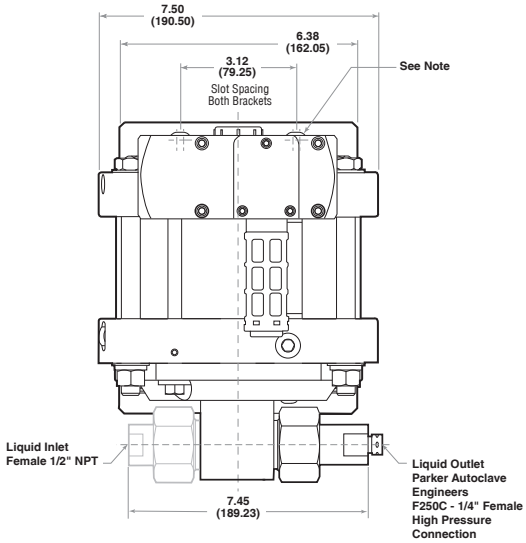

Front View

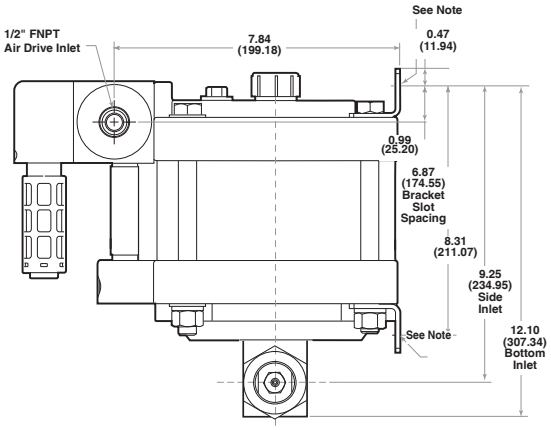

Right View

Note:

Each Mounting Bracket includes (2) x 13/32" (10.32) Slots for 3/8" Bolts.

All dimensions are for reference only and are subject to change without notice.

Primary Dimensions: Inches

Secondary Dimensions: (Millimeters)

Tel: +45 63 12 83 00 | Email: ps@hymatik.com | www.hymatik.com | Hvidkaervej 27a, DK-5250 Odense SV, Denmark



Series ASL150-02 (Single-Acting, Dual Piston Air Drive)

Air-Driven, High Flow, High Pressure Liquid Pump

Technical & Performance Data Sheet

Manual: **02-9236BE** | February 2022

Parker

ENGINEERING YOUR SUCCESS.

Technical Data

Section 1.0
Liquid Side Specifications

Service: Oil, Water or Water/Oil mixture and other fluids depending on material compatibility

Maximum Outlet Pressure: 43,000 psi (2965 bar)

Air to Liquid Pressure Ratio: 1:300

Volume Displacement Per Stroke: 0.39 in^3 (6.4 cm^3)

Inlet Connection: 1/2" FNPT

Outlet Connection: Parker Autoclave F250C-1/4" Female High Pressure

Section 2.0
Air Side Specifications

Air Drive Pressure Range: 15-150 psi (1-10 bar)* **(Note)**

Nominal Air Pressure Required: 43,000 psi (2965 bar)
Output Pressure: 143 psi (9.9 bar)

Inlet Port: 1/2" FNPT

Pilot Port: 1/8" FNPT (unregulated air)

Exhaust Port (muffler removed): 1/2" FNPT

Air Consumption @ 90 psi: 64 SCFM

Prelubricated at Factory

***Note:** Maximum air drive pressure is limited by maximum output pressure.

Section 3.0
General Specifications

Maximum Operating Temperature: 0-140° F (-18° to 60° C)

Net Weight: 42 lbs. (19.1 kg)

Pressure Head: 15-5 PH Stainless Steel

Plunger Description: Stainless steel plunger utilizing a proprietary multi-layer carbon based coating with diamond like carbon exterior layer - 3 times the hardness of stellite with a coefficient of friction equal to/less than PTFE

Check Valve Glands: 316 Stainless Steel (SS)

Liquid Seal: UHMWPE U-Cup with SS Spring Energizer

Air Drive Seals: Buna N

Tel: +45 63 12 83 00 | Email: ps@hymatik.com | www.hymatik.com | Hvidkaervej 27a, DK-5250 Odense SV, Denmark

General Information

Section 4.0 - Ordering Guide

For complete information on available pump options, contact Parker Autoclave Engineers.

Typical catalog number: **ASL150-02SNP**

ASL150-02	S	N	P
Pump Type / Size / Ratio	**Liquid Inlet Location**	**Isolation Chamber**	**Liquid Seal Materials†**
ASL = • Standard Liquid High Flow, High Pressure Pump • 6" Dual Piston Air Drive • 1:300 Air-to-Liquid Pressure Ratio • Maximum 43,000 psi (2965 bar)	* **S** = Side	* **N** = None	**P** = UHMWPE U-Cup with Elgiloy Spring Energizer

Section 5.0 - Flow Rate vs. Outlet Pressure

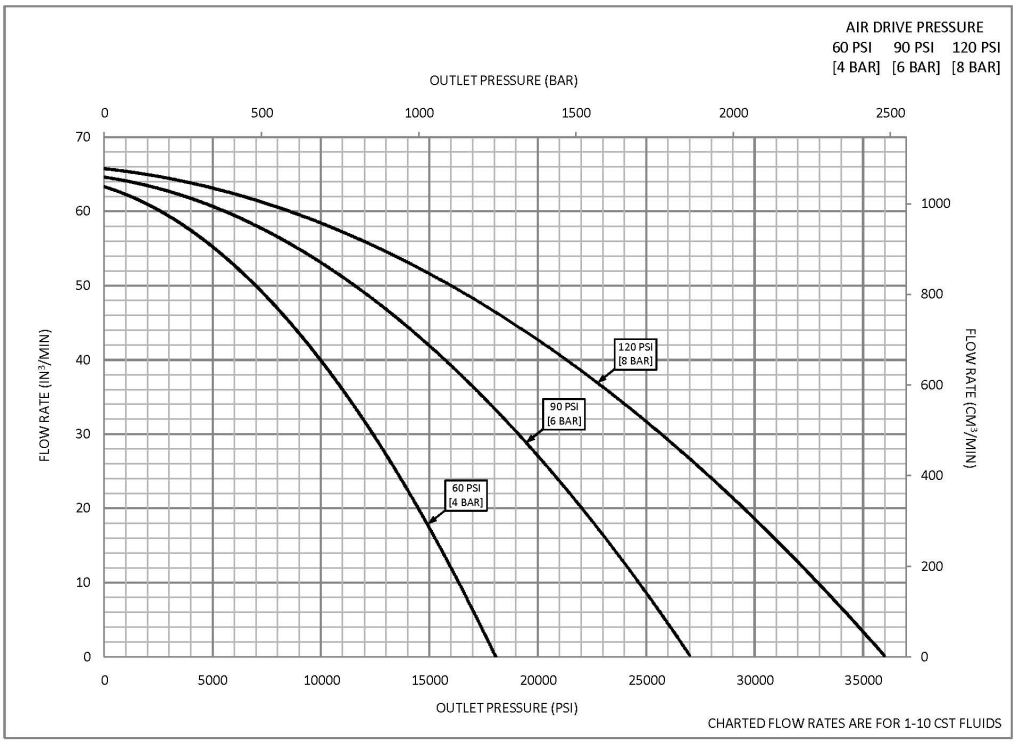

Actual flow rates will vary depending on air flow capacity, downstream flow restrictions, and fluid type.

Tel: +45 63 12 83 00 | Email: ps@hymatik.com | www.hymatik.com | Hvidkaervej 27a, DK-5250 Odense SV, Denmark

Section 6.0 - Dimensional Data

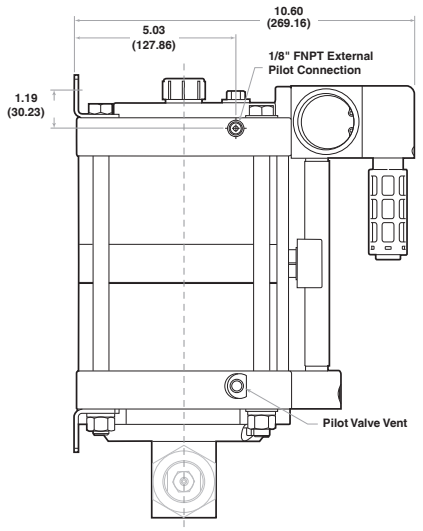

Left View

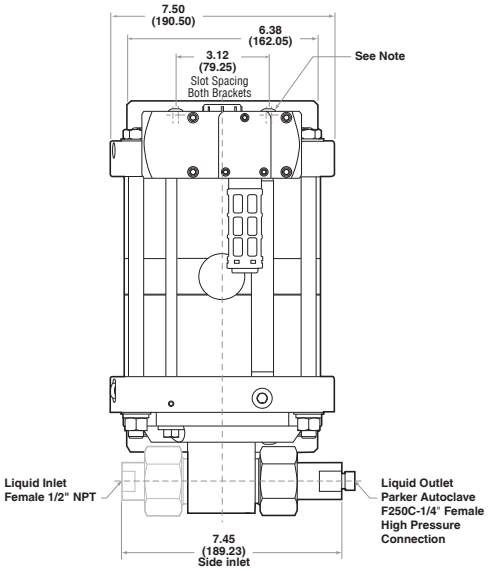

Front View

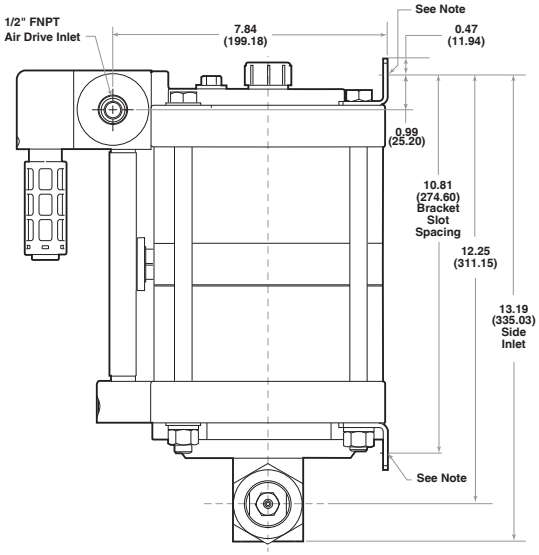

Right View

Note:

Each Mounting Bracket includes (2) x 13/32" (10.32) Slots for 3/8" Bolts.

All dimensions are for reference only and are subject to change without notice.

Primary Dimensions: Inches

Secondary Dimensions: (Millimeters)

Tel: +45 63 12 83 00 | Email: ps@hymatik.com | www.hymatik.com | Hvidkaervej 27a, DK-5250 Odense SV, Denmark

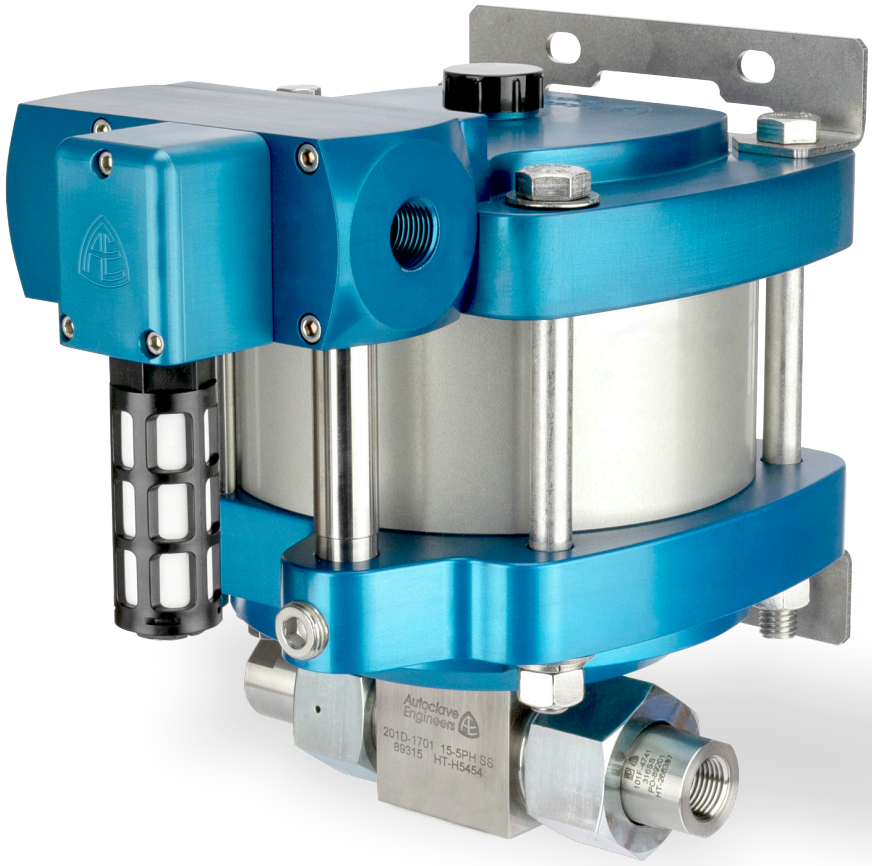

Series ASL250-01 (Single-Acting, Single Piston Air Drive)

Air-Driven, High Flow, High Pressure Liquid Pump

Technical & Performance Data Sheet

Manual: **02-9234BE** | January 2022

Parker

ENGINEERING YOUR SUCCESS.

Technical Data

Section 1.0
Liquid Side Specifications

Service: Oil, Water or Water/Oil mixture and other fluids depending on material compatibility

Maximum Outlet Pressure: 38,400 psi (2648 bar)

Air to Liquid Pressure Ratio: 1:265

Volume Displacement Per Stroke: 0.22 in^3 (3.6 cm^3)

Inlet Connection: 1/2" FNPT

Outlet Connection: Parker Autoclave F250C-1/4" Female HIgh Pressure

Section 2.0
Air Side Specifications

Air Drive Pressure Range: 15-150 psi (1-10 bar)* **(Note)**

Nominal Air Pressure Required: 38,400 psi (2648 bar)
Output Pressure: 145 psi (10 bar)

Inlet Port: 1/2" FNPT

Pilot Port: 1/8" FNPT (unregulated air)

Exhaust Port (muffler removed): 1/2" FNPT

Air Consumption @ 90 psi: 69 SCFM

Prelubricated at Factory

***Note:** Maximum air drive pressure is limited by maximum output pressure.

Section 3.0
General Specifications

Maximum Operating Temperature: 0-140° F (-18° to 60° C)

Net Weight: 32 lbs. (14.5 kg)

Pressure Head: 15-5 PH Stainless Steel

Plunger Description: Stainless steel plunger utilizing a proprietary multi-layer carbon based coating with diamond like carbon exterior layer - 3 times the hardness of stellite with a coefficient of friction equal to/less than PTFE

Check Valve Glands: 316 Stainless Steel (SS)

Liquid Seal: UHMWPE U-Cup with SS Spring Energizer

Air Drive Seals: Buna N

Tel: +45 63 12 83 00 | Email: ps@hymatik.com | www.hymatik.com | Hvidkaervej 27a, DK-5250 Odense SV, Denmark

General Information

Section 4.0 - Ordering Guide

For complete information on available pump options, contact Parker Autoclave Engineers.

Typical catalog number: **ASL250-01SNP**

ASL250-01	S	N	P
Pump Type / Size / Ratio	**Liquid Inlet Location**	**Isolation Chamber**	**Liquid Seal Materials†**
ASL = • Standard Liquid High Flow, High Pressure Pump • 6" Single Piston Air Drive • 1:265 Air-to-Liquid Pressure Ratio • Maximum 38,400 psi (2648 bar)	* **S** = Side	* **N** = None	**P** = UHMWPE U-Cup with Elgiloy Spring Energizer

Section 5.0 - Flow Rate vs. Outlet Pressure

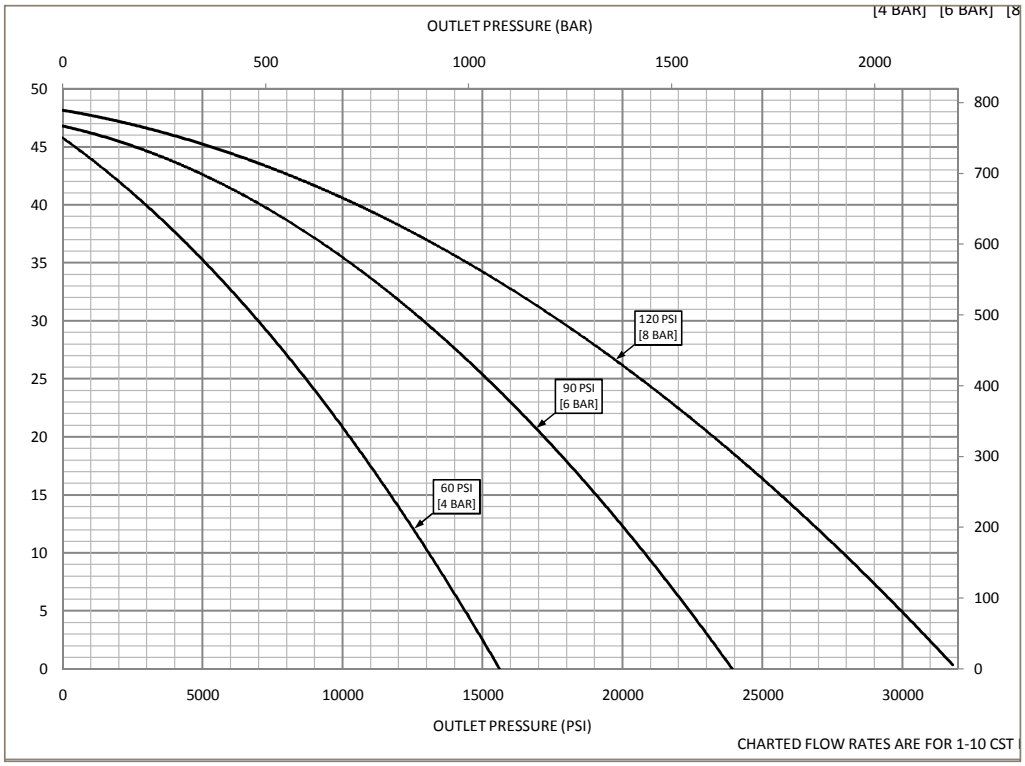

Actual flow rates will vary depending on air flow capacity, downstream flow restrictions, and fluid type.

Tel: +45 63 12 83 00 | Email: ps@hymatik.com | www.hymatik.com | Hvidkaervej 27a, DK-5250 Odense SV, Denmark

Section 6.0 - Dimensional Data

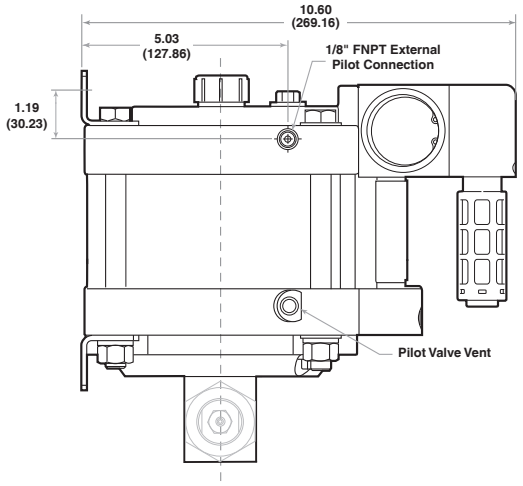

Left View

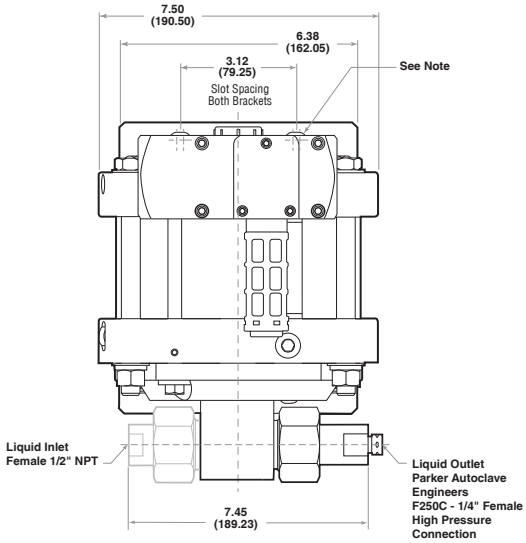

Front View

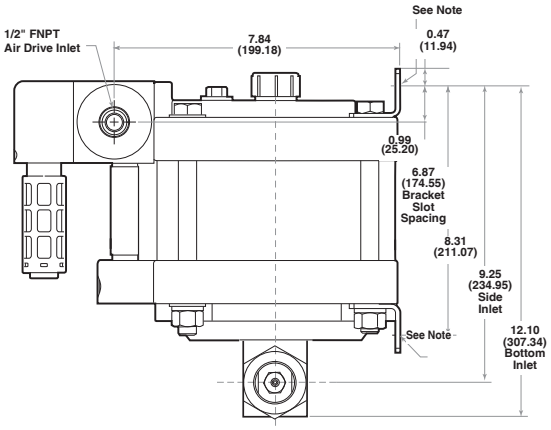

Right View

Note:

Each Mounting Bracket includes (2) x 13/32" (10.32) Slots for 3/8" Bolts.

All dimensions are for reference only and are subject to change without notice.

Primary Dimensions: Inches

Secondary Dimensions: (Millimeters)

Tel: +45 63 12 83 00 | Email: ps@hymatik.com | www.hymatik.com | Hvidkaervej 27a, DK-5250 Odense SV, Denmark

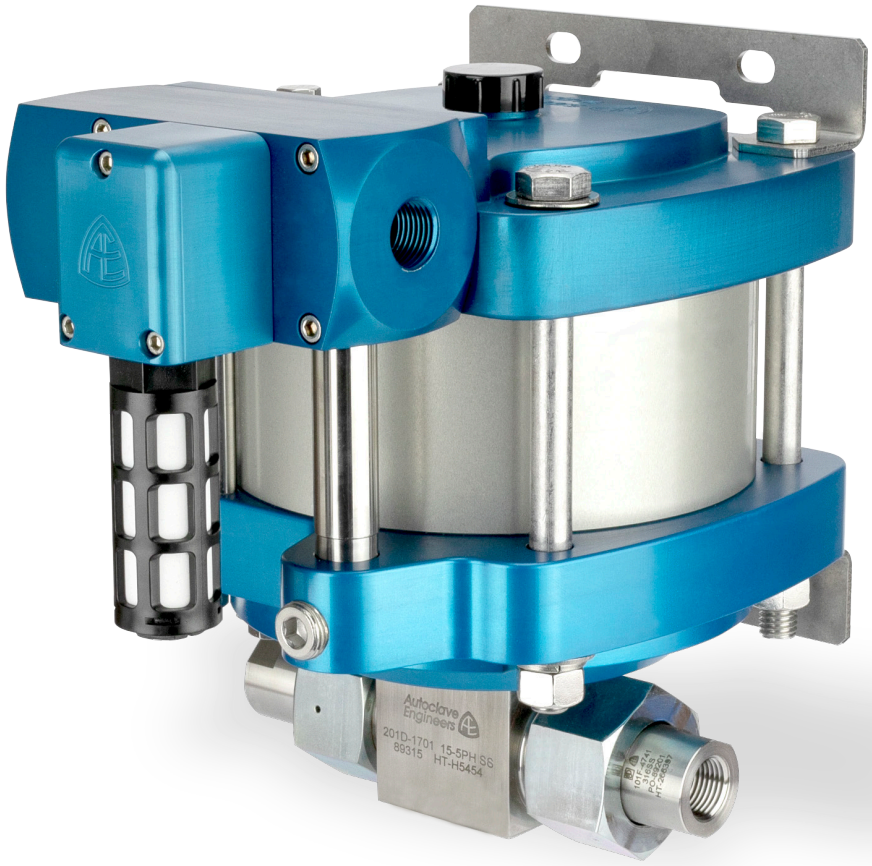

Series ASL400-01 (Single-Acting, Single Piston Air Drive)

Air-Driven, High Flow, High Pressure Liquid Pump

Technical & Performance Data Sheet

Manual: **02-9229BE** | February 2022

Parker

ENGINEERING YOUR SUCCESS.

Parker Instrumentation Products Divison (IPD)

Live Chat Support is available from **www.parker.com/IPD** when the Chat icon " " is visible on screen.

Model # _____ **Order #** _____

Serial # _____ **Mfg. Date** _____

Drawing # _____ Complete information above for future reference.

WARNING

FAILURE, IMPROPER SELECTION OR IMPROPER USE OF THE PRODUCTS AND/OR SYSTEMS DESCRIBED HEREIN OR RELATED ITEMS CAN CAUSE DEATH, PERSONAL INJURY AND PROPERTY DAMAGE.

This document and other information from Parker Hannifin Corporation, its subsidiaries and authorized distributors provide product and/or system options for further investigation by users having technical expertise. It is important that you analyze all aspects of your application and review the information concerning the product or system in the current product catalog.

Due to the variety of operating conditions and applications for these products or systems, the user, through its own analysis and testing, is solely responsible for making the final selection of the products and systems and assuring that all performance, safety and warning requirements of the application are met.

The products described herein, including without limitation, product features, specifications, designs, availability and pricing, are subject to change by Parker Hannifin Corporation and its subsidiaries at any time without notice.

ALL PARKER VALVES MUST PASS A RIGID OPERATIONAL AND LEAKAGE TEST BEFORE LEAVING THE FACTORY. IT IS RECOMMENDED AFTER ANY REASSEMBLY, THE VALVE SHOULD BE TESTED BY THE USER FOR OPERATION AND LEAKAGE. IF THESE INSTRUCTIONS ARE NOT FULLY COMPLIED WITH, THE REPAIRED PRODUCT MAY FAIL AND CAUSE DAMAGE TO PROPERTY OR INJURY TO PERSONS. PARKER HANNIFIN CANNOT ASSUME RESPONSIBILITY FOR PERFORMANCE OF A CUSTOMER SERVICED VALVE.

Tel: +45 63 12 83 00 | Email: ps@hymatik.com | www.hymatik.com | Hvidkaervej 27a, DK-5250 Odense SV, Denmark

Technical Data

Section 1.0
Liquid Side Specifications

Service: Oil, Water or Water/Oil mixture and other fluids depending on material compatibility

Maximum Outlet Pressure: 57,700 psi (3978 bar)

Air to Liquid Pressure Ratio: 1:398

Volume Displacement Per Stroke: 0.14 in^3 (2.3 cm^3)

Inlet Connection: 1/2" FNPT

Outlet Connection: Parker Autoclave F250C-1/4" Female HIgh Pressure

Section 2.0
Air Side Specifications

Air Drive Pressure Range: 15-150 psi (1-10 bar)* **(Note)**

Nominal Air Pressure Required: 57,700 psi (3978 bar)
Output Pressure: 145 psi (10 bar)

Inlet Port: 1/2" FNPT

Pilot Port: 1/8" FNPT (unregulated air)

Exhaust Port (muffler removed): 1/2" FNPT

Air Consumption @ 90 psi: 70 SCFM

Prelubricated at Factory

***Note:** Maximum air drive pressure is limited by maximum output pressure.

Section 3.0
General Specifications

Maximum Operating Temperature: 0-140° F (-18° to 60° C)

Net Weight: 32 lbs. (14.5 kg)

Pressure Head: 15-5 PH Stainless Steel

Plunger Description: Stainless steel plunger utilizing a proprietary multi-layer carbon based coating with diamond like carbon exterior layer - 3 times the hardness of stellite with a coefficient of friction equal to/less than PTFE

Check Valve Glands: 316 Stainless Steel (SS)

Liquid Seal: UHMWPE U-Cup with Elgiloy Spring Energizer

Air Drive Seals: Buna N

Tel: +45 63 12 83 00 | Email: ps@hymatik.com | www.hymatik.com | Hvidkaervej 27a, DK-5250 Odense SV, Denmark

General Information

Section 4.0 - Ordering Guide

For complete information on available pump options, contact Parker Autoclave Engineers.

Typical catalog number: **ASL400-01SNP**

ASL400-01	S	N	P
Pump Type / Size / Ratio	**Liquid Inlet Location**	**Isolation Chamber**	**Liquid Seal Materials†**
ASL = • Standard Liquid High Flow, High Pressure Pump • 6" Single Piston Air Drive • 1:398 Air-to-Liquid Pressure Ratio • Maximum 57,700 psi (2648 bar)	* **S** = Side	* **N** = None	**P** = UHMWPE U-Cup with Elgiloy Spring Energizer

Section 5.0 - Flow Rate vs. Outlet Pressure

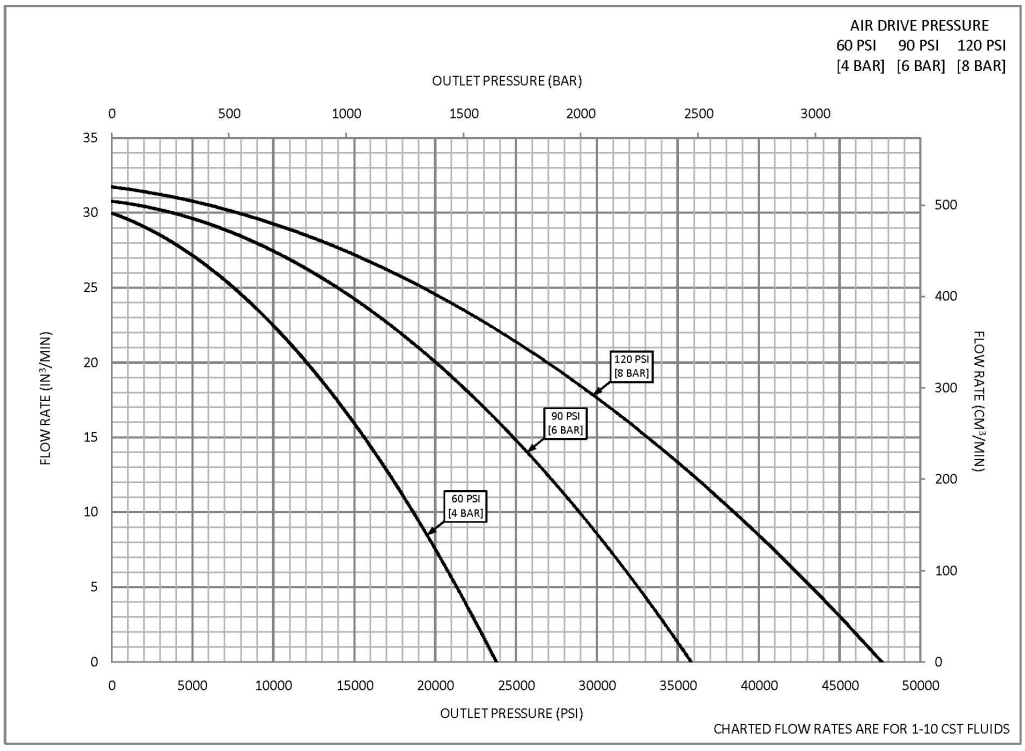

Actual flow rates will vary depending on air flow capacity, downstream flow restrictions, and fluid type.

Tel: +45 63 12 83 00 | Email: ps@hymatik.com | www.hymatik.com | Hvidkaervej 27a, DK-5250 Odense SV, Denmark

General Information

Section 6.0 - Dimensional Data

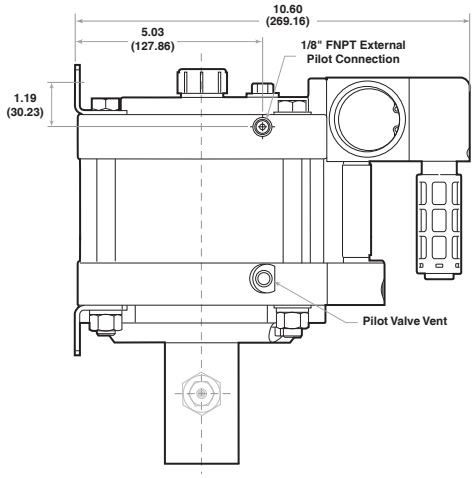

Left View

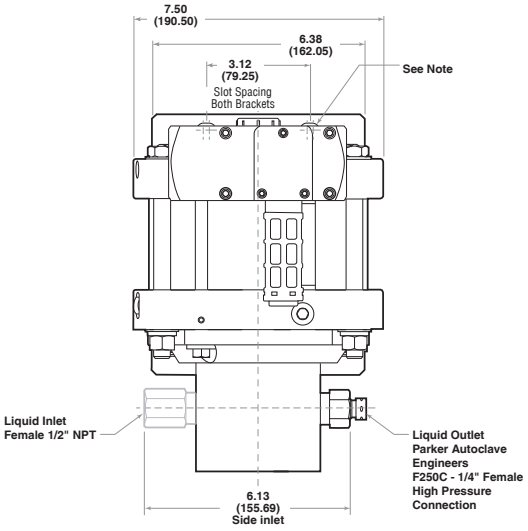

Front View

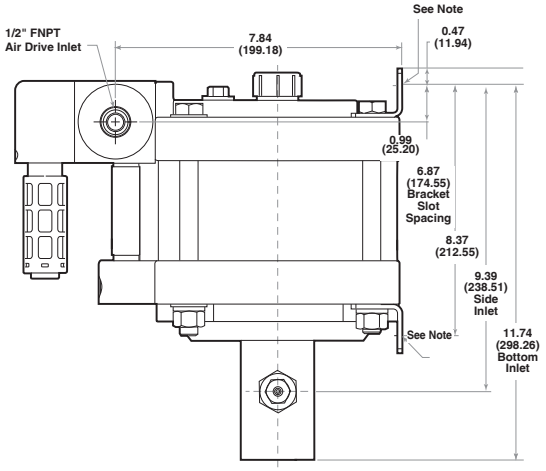

Right View

Note:

Each Mounting Bracket includes (2) x 13/32" (10.32) Slots for 3/8" Bolts.

All dimensions are for reference only and are subject to change without notice.

Primary Dimensions: Inches

Secondary Dimensions: (Millimeters)

Tel: +45 63 12 83 00 | Email: ps@hymatik.com | www.hymatik.com | Hvidkaervej 27a, DK-5250 Odense SV, Denmark



Series ASL400-02 (Single-Acting, Dual Piston Air Drive)

Air-Driven, High Flow, High Pressure Liquid Pump

Technical & Performance Data Sheet

Manual: 02-9232BE | February 2022

ENGINEERING YOUR SUCCESS.

Tel: +45 63 12 83 00 | Email: ps@hymatik.com | www.hymatik.com | Hvidkaervej 27a, DK-5250 Odense SV, Denmark

Technical Data

Section 1.0
Liquid Side Specifications

Service: Oil, Water or Water/Oil mixture and other fluids depending on material compatibility

Maximum Outlet Pressure: 60,000 psi (4137 bar)

Air to Liquid Pressure Ratio: 1:796

Isolation Chamber: Prevents process contamination of air section - Standard

Volume Displacement Per Stroke: 0.14 in^3 (2.3 cm^3)

Inlet Connection: 1/2" FNPT

Outlet Connection: Parker Autoclave F250C-1/4" Female High Pressure

Section 2.0
Air Side Specifications

Air Drive Pressure Range: 15-150 psi (1-10 bar)* **(Note)**

Nominal Air Pressure Required: 60,000 psi (4137 bar)
Output Pressure: 75 psi (5.2 bar)

Inlet Port: 1/2" FNPT

Pilot Port: 1/8" FNPT (unregulated air)

Exhaust Port (muffler removed): 1/2" FNPT

Air Consumption @ 90 psi: 48 SCFM

Prelubricated at Factory

***Note:** Maximum air drive pressure is limited by maximum output pressure.

Section 3.0
General Specifications

Maximum Operating Temperature: 0-140° F (-18° to 60° C)

Net Weight: 54 lbs. (24.5 kg)

Pressure Head: 15-5 PH Stainless Steel

Plunger Description: Tungsten Cobalt

Check Valve Glands: 15-5 PH Stainless Steel (SS)

Liquid Seal: UHMWPE U-Cup with Elgiloy Spring Energizer

Air Drive Seals: Buna N

Tel: +45 63 12 83 00 | Email: ps@hymatik.com | www.hymatik.com | Hvidkaervej 27a, DK-5250 Odense SV, Denmark

General Information

Section 4.0 - Ordering Guide

For complete information on available pump options, contact Parker Autoclave Engineers.

Typical catalog number: **ASL400-02SCP**

ASL400-02	S	C	P
Pump Type / Size / Ratio	**Liquid Inlet Location**	**Isolation Chamber**	**Liquid Seal Materials†**
ASL = • Standard Liquid High Flow, High Pressure Pump • 6" Dual Piston Air Drive • 1:796 Air-to-Liquid Pressure Ratio • Maximum 60,000 psi (4137 bar)	***S** = Side	**C** = Standard	**P** = UHMWPE U-Cup with Elgiloy Spring Energizer

Section 5.0 - Flow Rate vs. Outlet Pressure

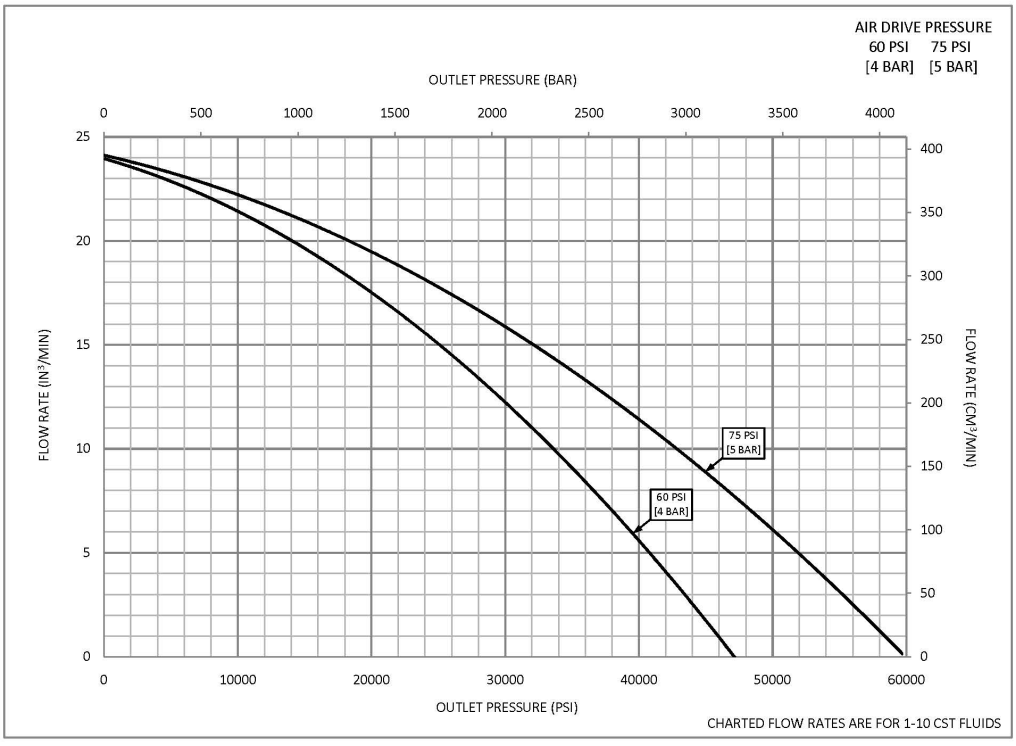

Actual flow rates will vary depending on air flow capacity, downstream flow restrictions, and fluid type.

Tel: +45 63 12 83 00 | Email: ps@hymatik.com | www.hymatik.com | Hvidkaervej 27a, DK-5250 Odense SV, Denmark

Section 6.0 - Dimensional Data

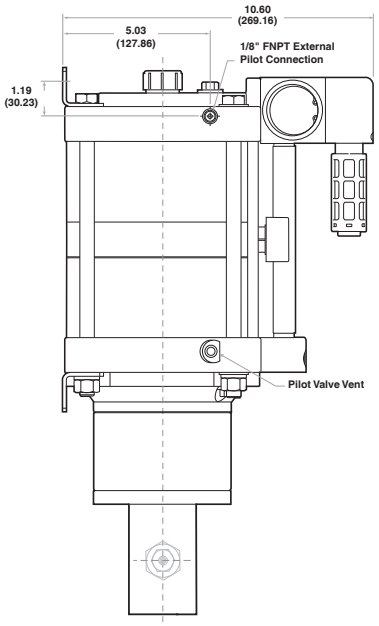

Left View

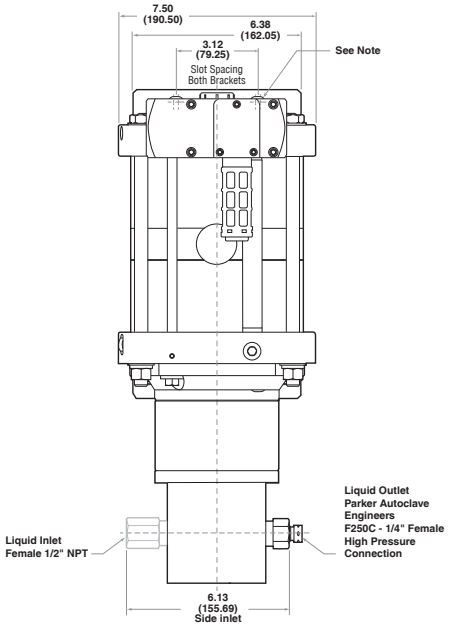

Front View

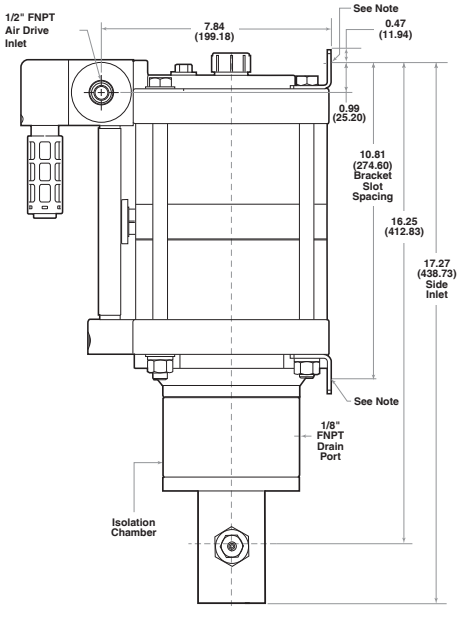

Right View

Note:

Each Mounting Bracket includes (2) x 13/32" (10.32) Slots for 3/8" Bolts.

All dimensions are for reference only and are subject to change without notice.

Primary Dimensions: Inches

Secondary Dimensions: (Millimeters)

Tel: +45 63 12 83 00 | Email: ps@hymatik.com | www.hymatik.com | Hvidkaervej 27a, DK-5250 Odense SV, Denmark

hymatik

ACHL

Series ACHL

Tel: +45 63 12 83 00 | Email: ps@hymatik.com | www.hymatik.com | Hvidkaervej 27a, DK-5250 Odense SV, Denmark



Series ACHL72-01 (Single-Acting, Single Piston Air Drive with Hand Lever)

Air-Driven, High Flow, High Pressure Liquid Pump

Technical & Performance Data Sheet

Manual: **02-9324BE** | January 2022

ENGINEERING YOUR SUCCESS.

Tel: +45 63 12 83 00 | Email: ps@hymatik.com | www.hymatik.com | Hvidkaervej 27a, DK-5250 Odense SV, Denmark

Technical Data

Manual Operation: Pump Comes standard with Hand Lever for precise pressure control, remote locations or emergency back-up applications.

Section 1.0
Liquid Side Specifications

Service: Oil, Water or Water/Oil mixture and other fluids depending on material compatibility

Maximum Outlet Pressure: 12,500 psi (862 bar)

Air to Liquid Pressure Ratio: 1:84

Volume Displacement Per Stroke: 0.09 in^3 (1.47 cm^3)

Inlet Connection: 3/8" FNPT

Dual Oulet Connections: Parker Autoclave F250C-1/4" Female High Pressure

Section 2.0
Air Side Specifications

Air Drive Pressure Range: 15-150 psi (1.0-10 bar)* **(Note)**

Nominal Air Pressure Required: 12,500 psi (862 bar)
Output Pressure: 148 psi (10.2 bar)

Inlet Port: 1/4" FNPT

Pilot Port: 1/4" FNPT

Exhaust Port (muffler removed): 1/4" FNPT

Air Consumption @ 90 psi Air (0 PSI Liquid): 13 SCFM

Prelubricated at Factory

***Note:** Maximum air drive pressure is limited by maximum output pressure.

Section 3.0
General Specifications

Maximum Operating Temperature: 0-140° F (-18° to 60° C)

Net Weight: 9 lbs. (4.1 kg)

Pressure Head: 316 Stainless Steel

Plunger Description: 440 Stainless Steel

Check Valve Glands: 15-5PH Stainless Steel (SS)

Liquid Seal: UHMWPE U-Cup with Elgiloy Spring Energizer

Air Drive Seals: Buna N

Tel: +45 63 12 83 00 | Email: ps@hymatik.com | www.hymatik.com | Hvidkaervej 27a, DK-5250 Odense SV, Denmark

General Information

Section 4.0 - Ordering Guide

For complete information on available pump options, contact Parker Autoclave Engineers.

Typical catalog number: **ACHL72-01SNP**



Pump Type / Size / Ratio

ACHL =
- Compact Liquid High Pressure Pump with Hand Lever
- 3" Single Piston Air Drive
- 1:84 Air-to-Liquid Pressure Ratio
- Maximum 12,500 psi (862 bar)

Liquid Inlet Location

***S** = Side

Isolation Chamber

N = None

Liquid Seal Materials†

***P** = UHMWPE U-Cup with Elgiloy Spring Energizer

Air Pressure (PSI)	Stall Pressure (bar)	Hand Lever Force (LBF)
20	1355	12
40	3112	21
60	4870	30
80	6629	39
100	8386	48
120	10145	57
148	12500	70

Stall Pressure Note:

The pump's air piston is returned using a coil spring. Depending on the position of the piston during stall stroke, the stall pressure can vary ±350 psi from the values shown on the chart.

For precise pressure control, Parker Autoclave Engineers recommends using the manual hand lever.

Section 5.0 - Liquid Flow Rate vs. Outlet Pressure

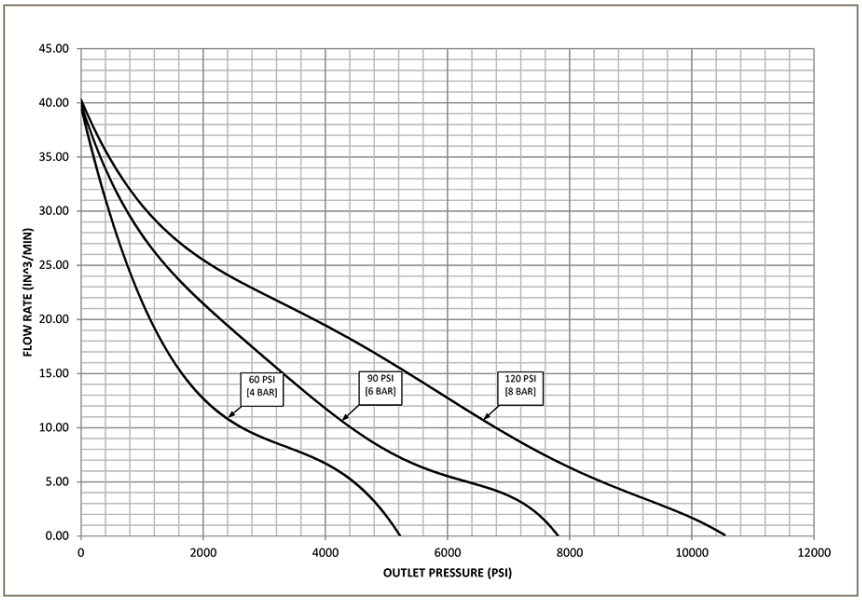

Actual flow rates will vary depending on air flow capacity, downstream flow restrictions, and fluid type.

Tel: +45 63 12 83 00 | Email: ps@hymatik.com | www.hymatik.com | Hvidkaervej 27a, DK-5250 Odense SV, Denmark

General Information

Section 6.0 - Dimensional Data

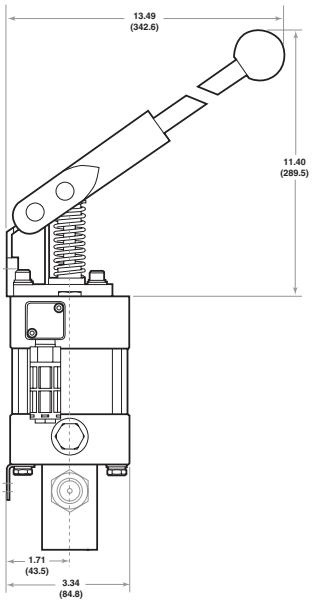

Left View

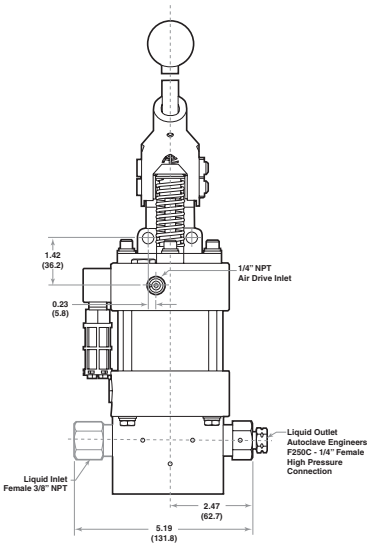

Front View

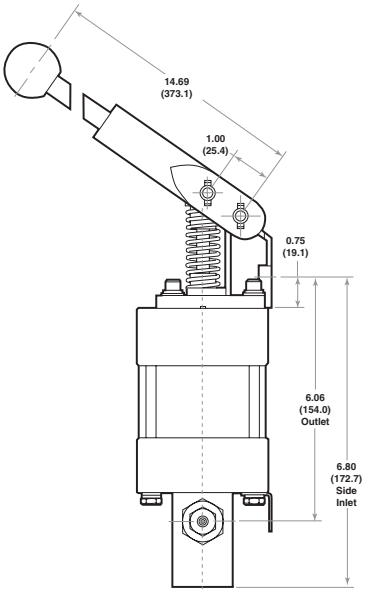

Right View

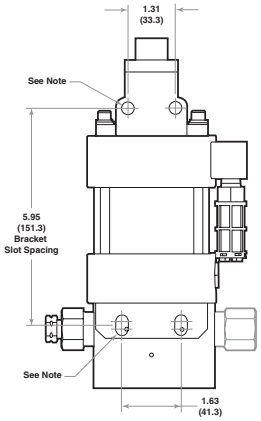

Back View

Note:

Each Mounting Bracket includes (2) 11/32" (8.73) holes for 5/16" Bolts.
Spool air tubing not shown for clarity.
All dimensions are for reference only and are subject to change without notice.
Primary Dimensions: Inches
Secondary Dimensions: (Millimeters)

Tel: +45 63 12 83 00 | Email: ps@hymatik.com | www.hymatik.com | Hvidkaervej 27a, DK-5250 Odense SV, Denmark



Series ACHL189-01 (Single-Acting, Single Piston Air Drive with Hand Lever)

Air-Driven, High Flow, High Pressure Liquid Pump

Technical & Performance Data Sheet

Manual: **02-9246BE** | January 2022

ENGINEERING YOUR SUCCESS.

Tel: +45 63 12 83 00 | Email: ps@hymatik.com | www.hymatik.com | Hvidkaervej 27a, DK-5250 Odense SV, Denmark

Technical Data

Manual Operation: Pump Comes standard with Hand Lever for precise pressure control, remote locations or emergency back-up applications.

Section 1.0
Liquid Side Specifications

Service: Oil, Water or Water/Oil mixture and other fluids depending on material compatibility

Maximum Outlet Pressure: 31,900 psi (2200 bar)

Air to Liquid Pressure Ratio: 1:213

Volume Displacement Per Stroke: 0.035 in^3 (.57 cm^3)

Inlet Connection: 3/8" FNPT

Dual Oulet Connections: Parker Autoclave F250C-1/4" Female High Pressure

Section 2.0
Air Side Specifications

Air Drive Pressure Range: 15-150 psi (1.0-10 bar)* **(Note)**

Nominal Air Pressure Required: 31,900 psi (2200 bar)
Output Pressure: 148 psi (10.2 bar)

Inlet Port: 1/4" FNPT

Pilot Port: 1/4" FNPT

Exhaust Port (muffler removed): 1/4" FNPT

Air Consumption @ 90 psi Air (0 PSI Liquid): 13 SCFM

Prelubricated at Factory

***Note:** Maximum air drive pressure is limited by maximum output pressure.

Section 3.0
General Specifications

Maximum Operating Temperature: 0-140° F (-18° to 60° C)

Net Weight: 9 lbs. (4.1 kg)

Pressure Head: 316 Stainless Steel

Plunger Description: 440 Stainless Steel

Check Valve Glands: 15-5PH Stainless Steel (SS)

Liquid Seal: UHMWPE U-Cup with Elgiloy Spring Energizer

Air Drive Seals: Buna N

Tel: +45 63 12 83 00 | Email: ps@hymatik.com | www.hymatik.com | Hvidkaervej 27a, DK-5250 Odense SV, Denmark

General Information

Section 4.0 - Ordering Guide

For complete information on available pump options, contact Parker Autoclave Engineers.

Typical catalog number: **ACHL189-01SNP**



Pump Type / Size / Ratio

ACHL =
- Compact Liquid High Pressure Pump with Hand Lever
- 3" Single Piston Air Drive
- 1:213 Air-to-Liquid Pressure Ratio
- Maximum 31,900 psi (2200 bar)

Liquid Inlet Location

***S** = Side

Isolation Chamber

N = None

Liquid Seal Materials†

***P** = UHMWPE U-Cup with Elgiloy Spring Energizer

Air Pressure (PSI)	Stall Pressure (bar)	Hand Lever Force (LBF)
20	3435	12
40	7890	21
60	12350	30
80	16810	39
100	21265	48
120	25725	57
148	31900	70

Stall Pressure Note:

The pump's air piston is returned using a coil spring. Depending on the position of the piston during stall stroke, the stall pressure can vary ±350 psi from the values shown on the chart.

For precise pressure control, Parker Autoclave Engineers recommends using the manual hand lever.

Section 5.0 - Liquid Flow Rate vs. Outlet Pressure

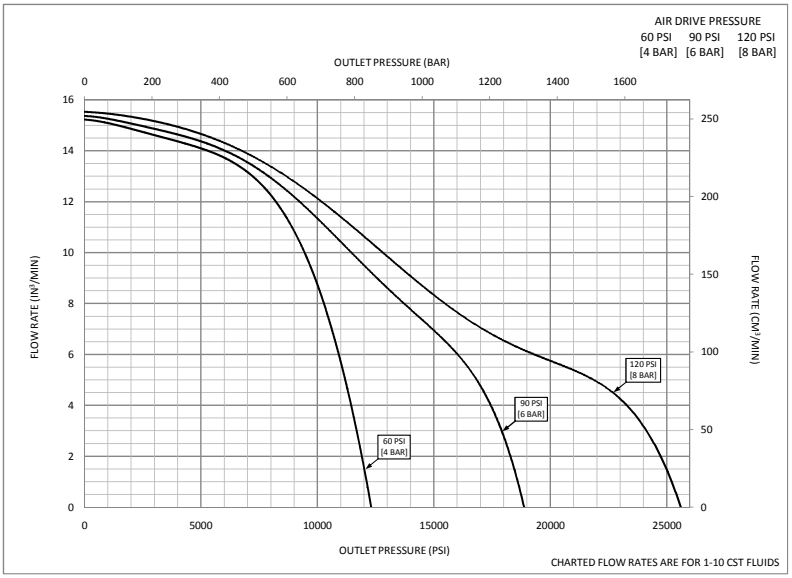

Actual flow rates will vary depending on air flow capacity, downstream flow restrictions, and fluid type.

Tel: +45 63 12 83 00 | Email: ps@hymatik.com | www.hymatik.com | Hvidkaervej 27a, DK-5250 Odense SV, Denmark

General Information

Section 6.0 - Dimensional Data

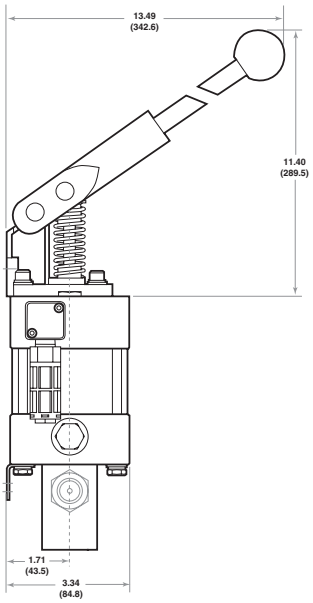

Left View

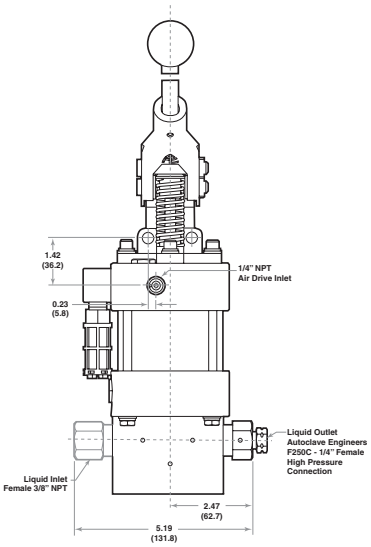

Front View

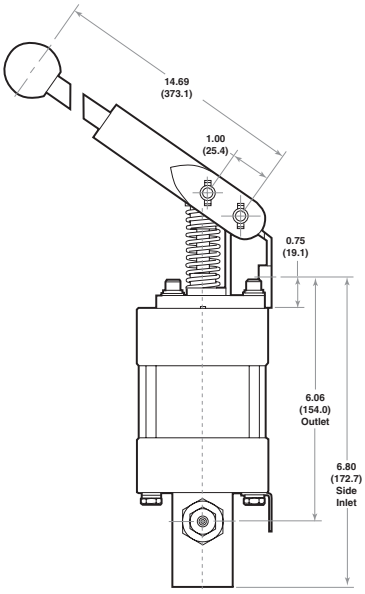

Right View

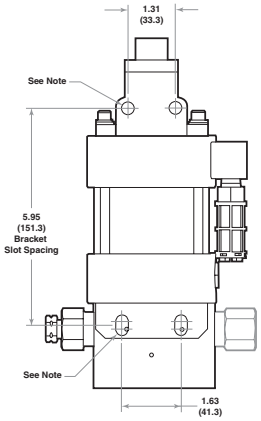

Back View

Note:

Each Mounting Bracket includes (2) 11/32" (8.73) holes for 5/16" Bolts.
Spool air tubing not shown for clarity.
All dimensions are for reference only and are subject to change without notice.
Primary Dimensions: Inches
Secondary Dimensions: (Millimeters)

Tel: +45 63 12 83 00 | Email: ps@hymatik.com | www.hymatik.com | Hvidkaervej 27a, DK-5250 Odense SV, Denmark

AHL

Series AHL

Tel: +45 63 12 83 00 | Email: ps@hymatik.com | www.hymatik.com | Hvidkaervej 27a, DK-5250 Odense SV, Denmark

hymatik

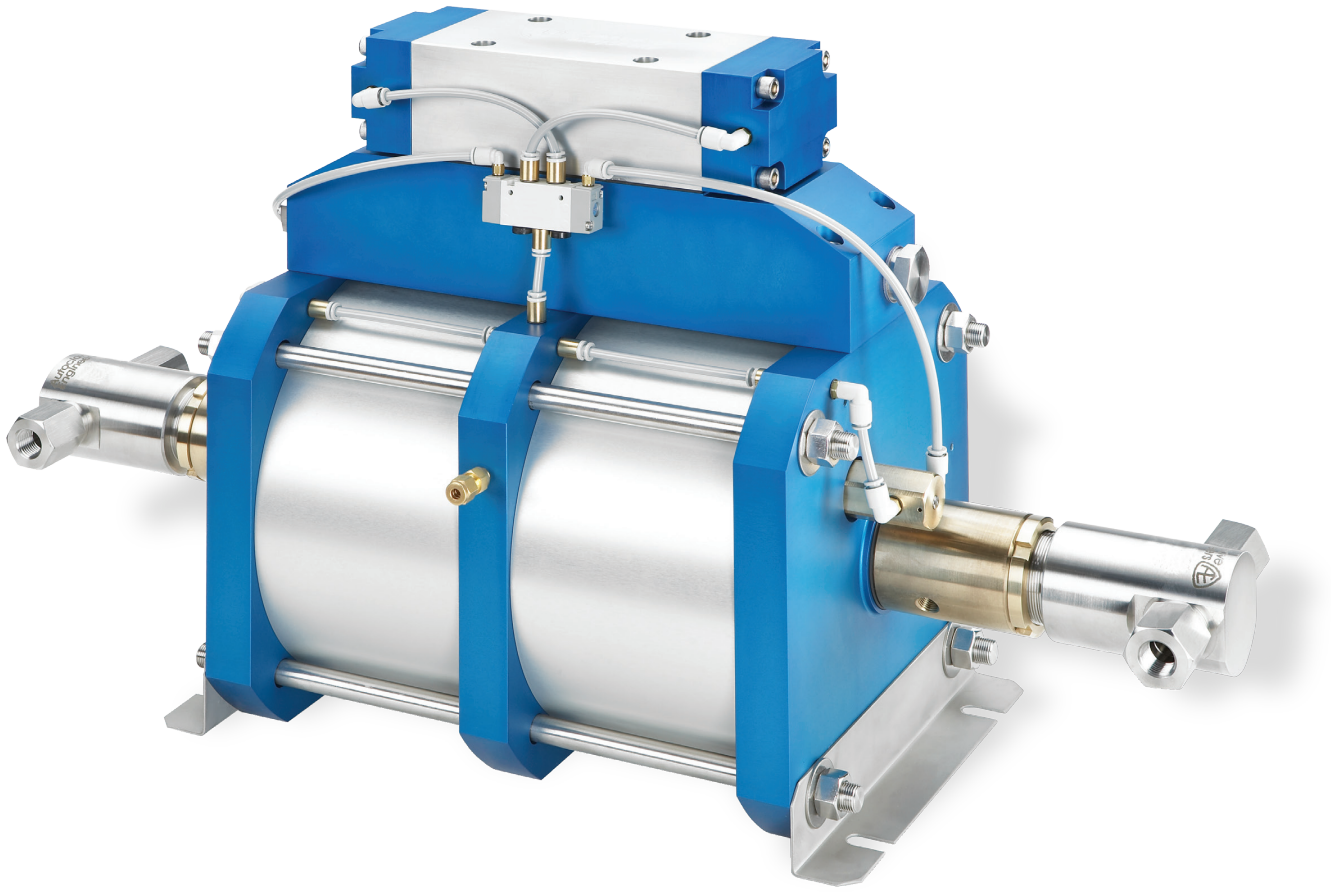

Series AHL33-2D (Double-Acting, Dual Piston Air Drive)

Air-Driven, High Flow, High Pressure Liquid Pump

Technical & Performance Data Sheet

Manual: **02-9248BE** | February 2022

Parker

ENGINEERING YOUR SUCCESS.

Tel: +45 63 12 83 00 | Email: ps@hymatik.com | www.hymatik.com | Hvidkaervej 27a, DK-5250 Odense SV, Denmark

Technical Data

Section 1.0
Liquid Side Specifications

Service: Oil, Water or Water/Oil mixture and other fluids depending on material compatibility

Maximum Outlet Pressure: 6,700 psi (462 bar)

Air to Liquid Pressure Ratio: 1:67

Isolation Chamber: Prevents process contamination of air section - Standard.

Volume Displacement Per Stroke: 15.3 in^3 (250.7 cm^3)

Inlet Connection: 1" FNPT

Dual Oulet Connections: 1/2" FNPT

Section 2.0
Air Side Specifications

Air Drive Pressure Range: 20-100 psi (1.4-6.9 bar)* **(Note)**

Nominal Air Pressure Required: 6,700 psi (462 bar)
Output Pressure: 100 psi (6.9 bar)

Inlet Port: 1" Female FNPT

Pilot Port: 1/8" Female FNPT

Exhaust Port (muffler removed): 1" Female BSP

Air Consumption @ 50 psi Air (0 PSI Liquid): 290 SCFM

Prelubricated at Factory

***Note:** Maximum air drive pressure is limited by maximum output pressure.

Section 3.0
General Specifications

Maximum Operating Temperature: 0-140° F (-18° to 60° C)

Net Weight: 160 lbs. (73 kg)

Pressure Head: 15-5 PH Stainless Steel

Plunger Description: Stainless steel plunger utilizing a proprietary multi-layer carbon based coating with diamond like carbon exterior layer - 3 times the hardness of stellite with a coefficient of friction equal to/less than PTFE

Check Valve Glands: 316 Stainless Steel (SS)

Liquid Seal: Thermoplastic Polyester U-Cup and FKM O-Rings

Air Drive Seals: Buna N

Tel: +45 63 12 83 00 | Email: ps@hymatik.com | www.hymatik.com | Hvidkaervej 27a, DK-5250 Odense SV, Denmark

General Information

Section 4.0 - Ordering Guide

For complete information on available pump options, contact Parker Autoclave Engineers.

Typical catalog number: **AHL33-2DSCTV**



Pump Type / Size / Ratio

AHL =
- High Flow, Liquid High Pressure Pump
- 10" Dual Piston Air Drive
- 1:67 Air-to-Liquid Pressure Ratio
- Maximum 6,700 psi (462 bar)
- Double Acting Liquid Heads

Liquid Inlet Location

***S** = Side

Isolation Chamber

***C** = Included

Liquid Seal Materials†

TV = Thermoplastic Polyester U-Cup and FKM O-Rings

TB = Thermoplastic Polyester U-Cup and Buna-N O-Rings

TC = Thermoplastic Polyester U-Cup and Perfluoroelastomer FFKM O-Rings

Section 5.0 - Liquid Flow Rate vs. Outlet Pressure

Approximate air drive pressure: 100 psi			
Pressure (PSI)	**Pressure (bar)**	**Flow (gpm)**	**Flow (liter/min)**
0	0	7.6 (*see note 2)	28.8 (*see note 2)
1000	69	6.1	23.0
2000	138	5.7	21.5
3000	207	4.9	18.4
4000	276	4.0	15.2
5000	345	3.2	12.3
6000	414	1.8	6.9

Nominal Liquid Pressure (Stalled)			
Air Drive Pressure		**Liquid Pressure**	
PSI	bar	PSI	bar
20	1.4	1340	92.4
30	2.1	2010	138.6
40	2.8	2680	184.8
50	3.4	3350	231.0
60	4.1	4020	277.2
70	4.8	4690	323.4
80	5.5	5360	369.6
90	6.2	6030	415.8
100	6.9	6700	461.9

Note:
1. Actual flow rates will vary depending on air flow capacity, downstream flow restrictions, and fluid type.

Tel: +45 63 12 83 00 | Email: ps@hymatik.com | www.hymatik.com | Hvidkaervej 27a, DK-5250 Odense SV, Denmark

General Information

Section 6.0 - Dimensional Data

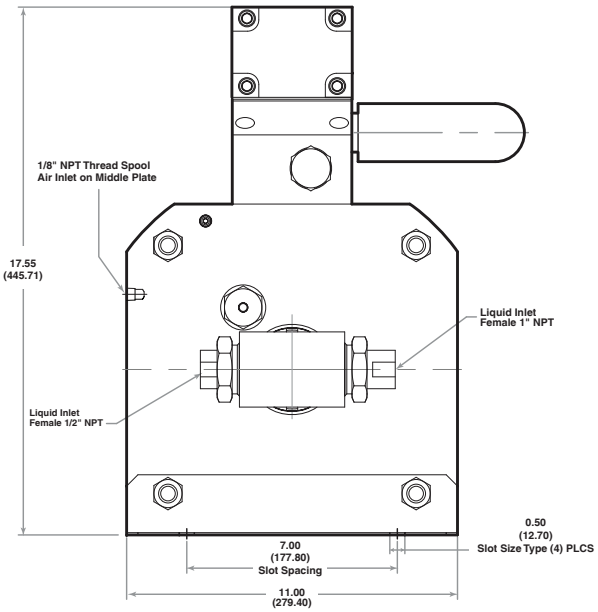

Side View

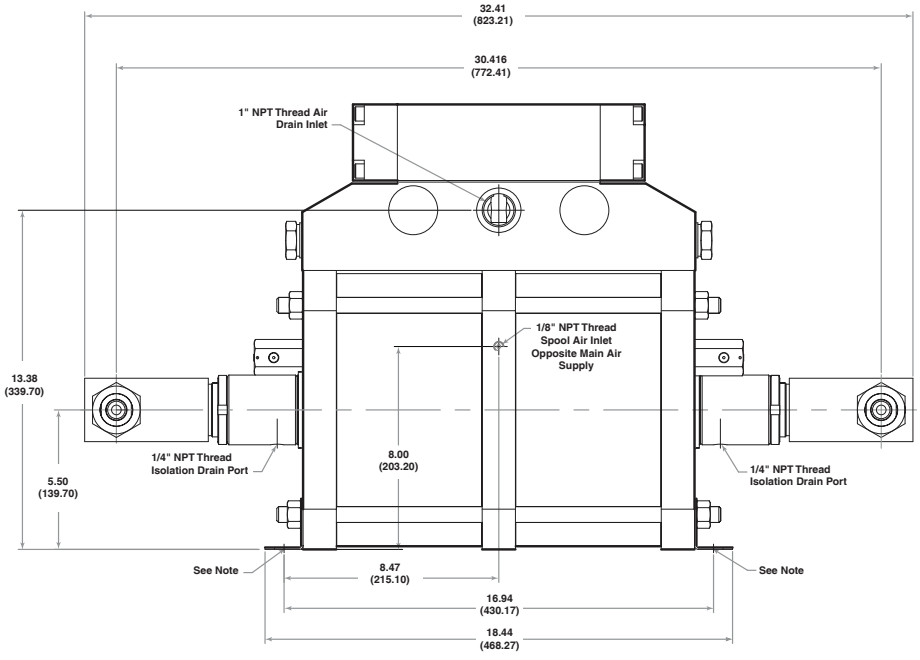

Front View

Note:

Each Mounting Bracket includes (2) x 0.50" (12.7) Slots for 7/16" Bolts.

Spool air tubing not shown for clarity.

All dimensions are for reference only and are subject to change without notice.

Primary Dimensions: Inches

Secondary Dimensions: (Millimeters)

Tel: +45 63 12 83 00 | Email: ps@hymatik.com | www.hymatik.com | Hvidkaervej 27a, DK-5250 Odense SV, Denmark

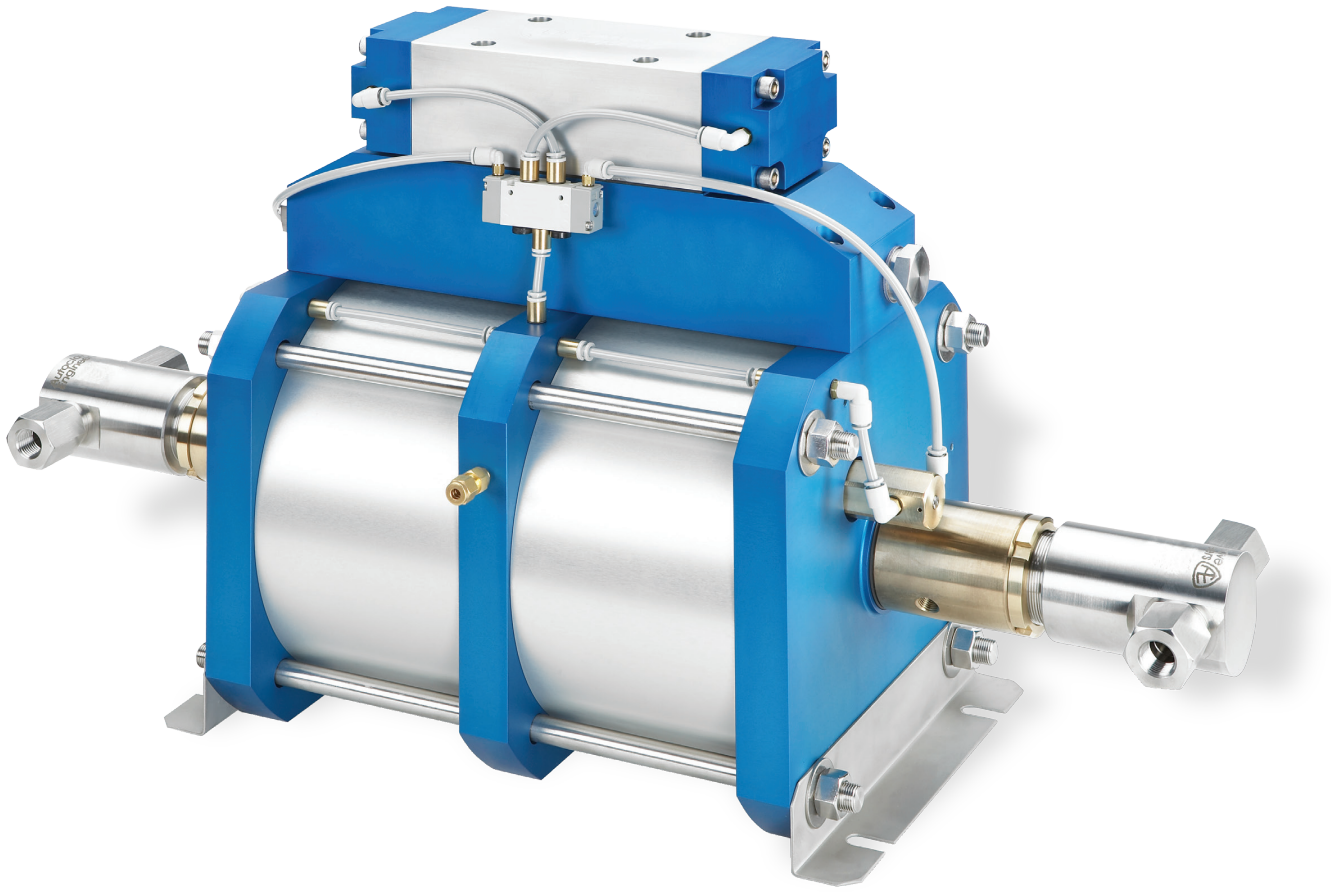

Series AHL66-2D (Double-Acting, Dual Piston Air Drive)

Air-Driven, High Flow, High Pressure Liquid Pump

Technical & Performance Data Sheet

Manual: **02-9239BE** | February 2022

ENGINEERING YOUR SUCCESS.

Tel: +45 63 12 83 00 | Email: ps@hymatik.com | www.hymatik.com | Hvidkaervej 27a, DK-5250 Odense SV, Denmark

Technical Data

Section 1.0
Liquid Side Specifications

Service: Oil, Water or Water/Oil mixture and other fluids depending on material compatibility

Maximum Outlet Pressure: 13,300 psi (917 bar)

Air to Liquid Pressure Ratio: 1:133

Isolation Chamber: Prevents process contamination of air section - Standard.

Volume Displacement Per Stroke: 7.8 in^3 (127.8 cm^3)

Inlet Connection: 1/2" FNPT

Dual Oulet Connections: 1/2" FNPT

Section 2.0
Air Side Specifications

Air Drive Pressure Range: 20-100 psi (1.4-6.9 bar)* **(Note)**

Nominal Air Pressure Required: 13,300 psi (917 bar)
Output Pressure: 100 psi (6.9 bar)

Inlet Port: 1" Female FNPT

Pilot Port: 1/8" Female FNPT

Exhaust Port (muffler removed): 1" Female BSP

Air Consumption @ 50 psi Air (0 PSI Liquid): 290 SCFM

Prelubricated at Factory

***Note:** Maximum air drive pressure is limited by maximum output pressure.

Section 3.0
General Specifications

Maximum Operating Temperature: 0-140° F (-18° to 60° C)

Net Weight: 160 lbs. (73 kg)

Pressure Head: 15-5 PH Stainless Steel

Plunger Description: Stainless steel plunger utilizing a proprietary multi-layer carbon based coating with diamond like carbon exterior layer - 3 times the hardness of stellite with a coefficient of friction equal to/less than PTFE

Check Valve Glands: 316 Stainless Steel (SS)

Liquid Seal: Thermoplastic Polyester U-Cup and FKM O-Rings

Air Drive Seals: Buna N

Tel: +45 63 12 83 00 | Email: ps@hymatik.com | www.hymatik.com | Hvidkaervej 27a, DK-5250 Odense SV, Denmark

General Information

Section 4.0 - Ordering Guide

For complete information on available pump options, contact Parker Autoclave Engineers.

Typical catalog number: **AHL66-2DSCTV**



Pump Type / Size / Ratio

AHL =
- High Flow, Liquid High Pressure Pump
- 10" Dual Piston Air Drive
- 1:133 Air-to-Liquid Pressure Ratio
- Maximum 13,300 psi (917 bar)
- Double Acting Liquid Heads

Liquid Inlet Location

***S** = Side

Isolation Chamber

***C** = Included

Liquid Seal Materials†

TV = Thermoplastic Polyester U-Cup and FKM O-Rings

TB = Thermoplastic Polyester U-Cup and Buna-N O-Rings

TC = Thermoplastic Polyester U-Cup and Perfluoroelastomer FFKM O-Rings

Section 5.0 - Liquid Flow Rate vs. Outlet Pressure

Approximate air drive pressure: 100 psi			
Pressure (PSI)	Pressure (bar)	Flow (gpm)	Flow (liter/min)
0	0	3.6*see note 2*	13.7 *see note 2*
1000	69	3.4	12.9
2000	138	3.1	12.0
3000	207	2.9	11.2
4000	276	2.7	10.3
5000	345	2.5	9.5
6000	414	2.3	8.7
7000	483	2.2	8.2
8000	552	2.0	7.7
9000	621	1.8	6.7
10000	690	1.5	5.7
11000	759	1.3	4.8
12000	828	1.0	3.9

Nominal Liquid Pressure (Stalled)			
Air Drive Pressure		Liquid Pressure	
PSI	bar	PSI	bar
20	1.4	2660	183.4
30	2.1	3990	275.2
40	2.8	5320	366.9
50	3.4	6650	458.6
60	4.1	7980	550.3
70	4.8	9310	642.1
80	5.5	10640	733.8
90	6.2	11970	825.5
100	6.9	13300	917.2

Note:
1. Actual flow rates will vary depending on air flow capacity, downstream flow restrictions, and fluid type.

Tel: +45 63 12 83 00 | Email: ps@hymatik.com | www.hymatik.com | Hvidkaervej 27a, DK-5250 Odense SV, Denmark

General Information

Section 6.0 - Dimensional Data

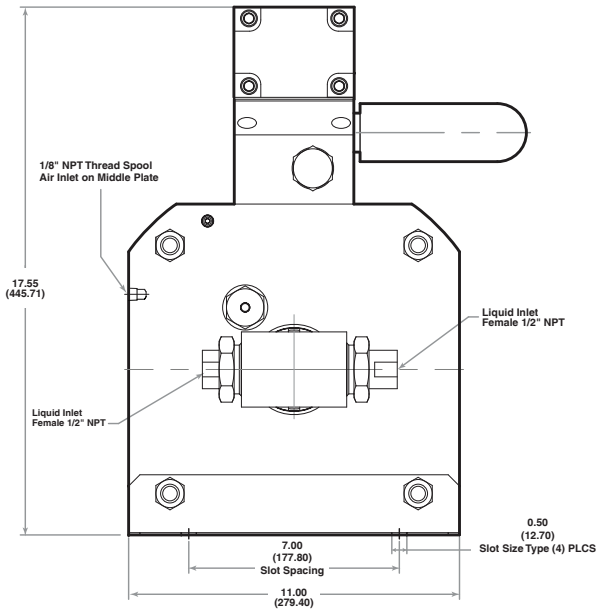

Side View

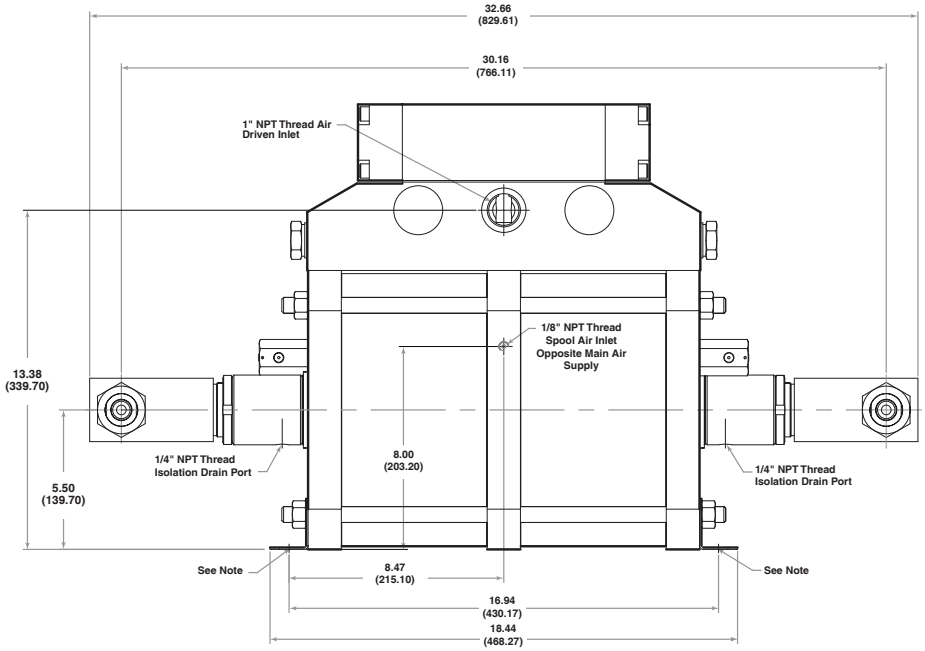

Front View

Note:

Each Mounting Bracket includes (2) x 0.50" (12.7) Slots for 7/16" Bolts.

Spool air tubing not shown for clarity.

All dimensions are for reference only and are subject to change without notice.

Primary Dimensions: Inches

Secondary Dimensions: (Millimeters)

Tel: +45 63 12 83 00 | Email: ps@hymatik.com | www.hymatik.com | Hvidkaervej 27a, DK-5250 Odense SV, Denmark

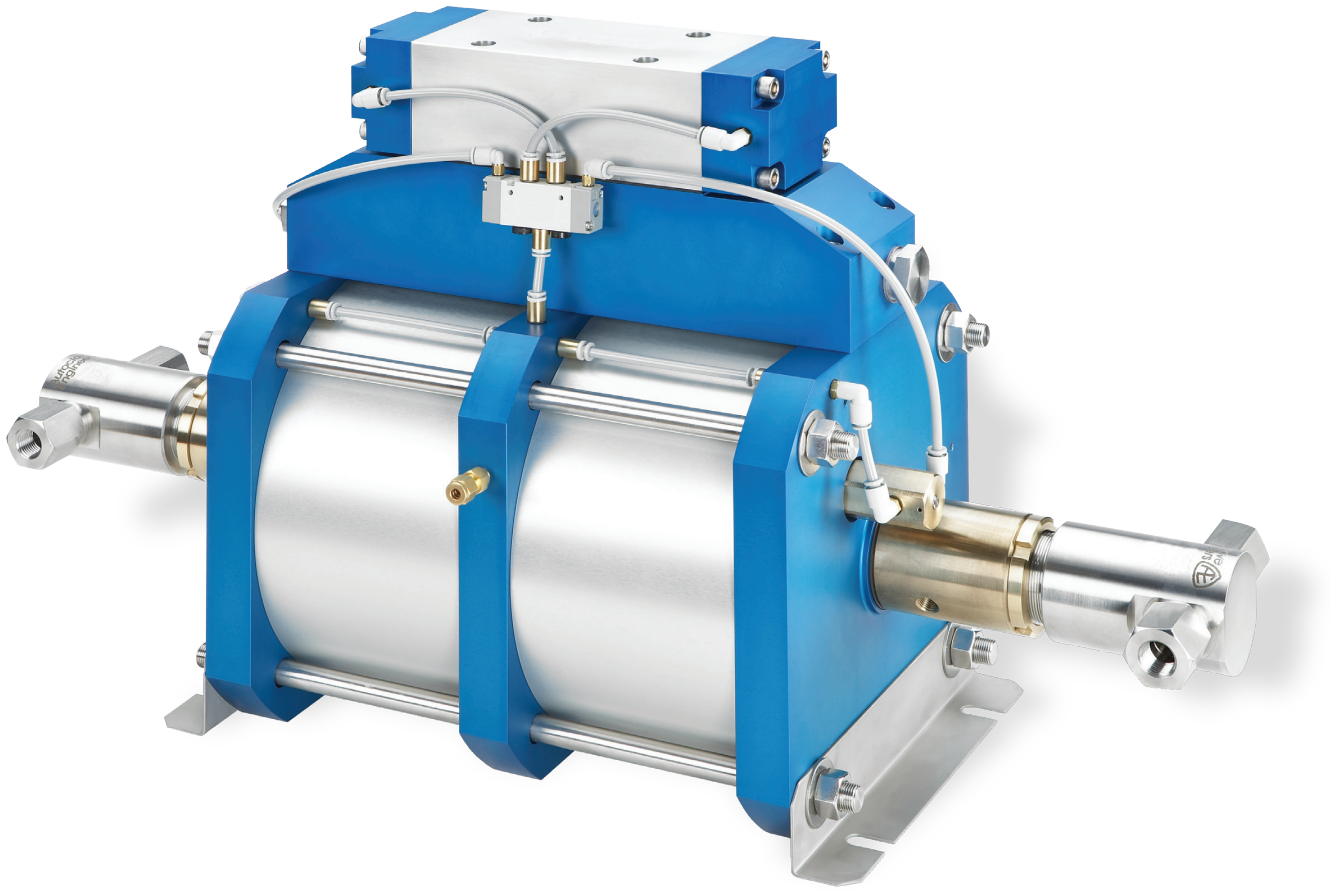

Series AHL118-2D (Double-Acting, Dual Piston Air Drive)

Air-Driven, High Flow, High Pressure Liquid Pump

Technical & Performance Data Sheet

Manual: **02-9339BE** | February 2022

ENGINEERING YOUR SUCCESS.

Tel: +45 63 12 83 00 | Email: ps@hymatik.com | www.hymatik.com | Hvidkaervej 27a, DK-5250 Odense SV, Denmark

Technical Data

Section 1.0
Liquid Side Specifications

Service: Oil, Water or Water/Oil mixture and other fluids depending on material compatibility

Maximum Outlet Pressure: 22,500 psi (1551 bar)

Air to Liquid Pressure Ratio: 1:239

Isolation Chamber: Prevents process contamination of air section - Standard.

Volume Displacement Per Stroke: 4.4 in^3 (72.18 cm^3)

Inlet Connection: 1/2" FNPT

Dual Oulet Connections: SF562CX
(Contact Parker Autoclave for additional options)

Section 2.0
Air Side Specifications

Air Drive Pressure Range: 20-95 psi (1.4-6.5 bar)* **(Note)**

Nominal Air Pressure Required: 22,500 psi (1551 bar)
Output Pressure: 95 psi (6.59 bar)

Inlet Port: 1" Female FNPT

Pilot Port: 1/8" Female FNPT

Exhaust Port (muffler removed): 1" Female BSP

Air Consumption @ 50 psi Air (0 PSI Liquid): 290 SCFM

Prelubricated at Factory

***Note:** Maximum air drive pressure is limited by maximum output pressure.

Section 3.0
General Specifications

Maximum Operating Temperature: 0-140° F (-18° to 60° C)

Net Weight: 160 lbs. (73 kg)

Pressure Head: 15-5 PH Stainless Steel

Plunger Description: Stainless steel plunger utilizing a proprietary multi-layer carbon based coating with diamond like carbon exterior layer - 3 times the hardness of stellite with a coefficient of friction equal to/less than PTFE

Check Valve Glands: 316 Stainless Steel (SS)

Liquid Seal: See Ordering Guide for options

Air Drive Seals: Buna N

Tel: +45 63 12 83 00 | Email: ps@hymatik.com | www.hymatik.com | Hvidkaervej 27a, DK-5250 Odense SV, Denmark

General Information

Section 4.0 - Ordering Guide

For complete information on available pump options, contact Parker Autoclave Engineers.

Typical catalog number: **AHL118-2DSCTV**



Pump Type / Size / Ratio

AHL =
- High Flow, Liquid High Pressure Pump
- 10" Dual Piston Air Drive
- 1:239 Air-to-Liquid Pressure Ratio
- Maximum 22,500 psi (1551 bar)
- Double Acting Liquid Heads

Liquid Inlet Location

***S** = Side

Isolation Chamber

***C** = Included

Liquid Seal Materials†

TV = Thermoplastic Polyester U-Cup and FKM O-Rings

TB = Thermoplastic Polyester U-Cup and Buna-N O-Rings

TC = Thermoplastic Polyester U-Cup and Perfluoroelastomer FFKM O-Rings

Section 5.0 - Liquid Flow Rate vs. Outlet Pressure

Approximate air drive pressure: 100 psi			
Pressure (PSI)	Pressure (bar)	Flow (gpm)	Flow (liter/min)
0	0	2.0	7.7
2000	138	1.8	6.9
4000	276	2.0	6.3
6000	414	1.5	5.8
8000	552	1.4	5.4
10000	689	1.3	5.1
12000	827	1.2	4.7
14000	965	1.1	4.3
16000	1103	1.0	3.8
18000	1241	0.8	3.1
20000	1379	0.6	2.3
22500	1551	0.2	0.8

Nominal Liquid Pressure (Stalled)			
Air Drive Pressure		Liquid Pressure	
PSI	bar	PSI	bar
20	1.4	4780	329.6
30	2.1	7170	494.4
40	2.8	9560	659.1
50	3.4	11950	823.9
60	4.1	14340	988.7
70	4.8	16730	1153.5
80	5.5	19120	1318.3
90	6.2	21510	1483.1
95	6.6	22500	1551.3

Note:
1. Actual flow rates will vary depending on air flow capacity, downstream flow restrictions, and fluid type.

Tel: +45 63 12 83 00 | Email: ps@hymatik.com | www.hymatik.com | Hvidkaervej 27a, DK-5250 Odense SV, Denmark

General Information

Section 6.0 - Dimensional Data

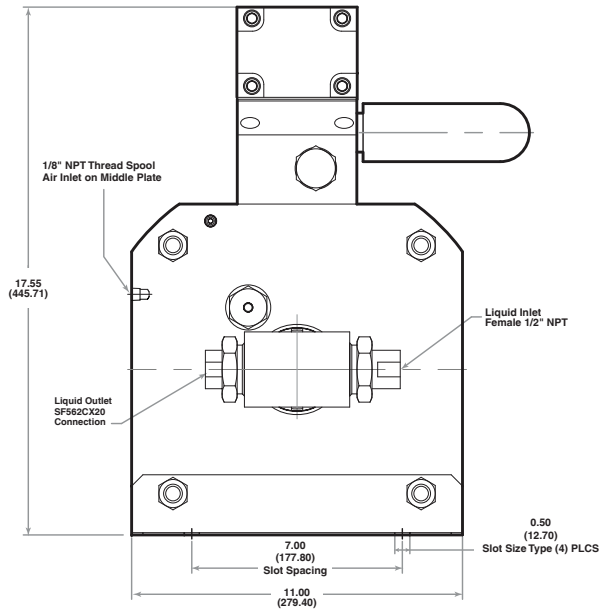

Side View

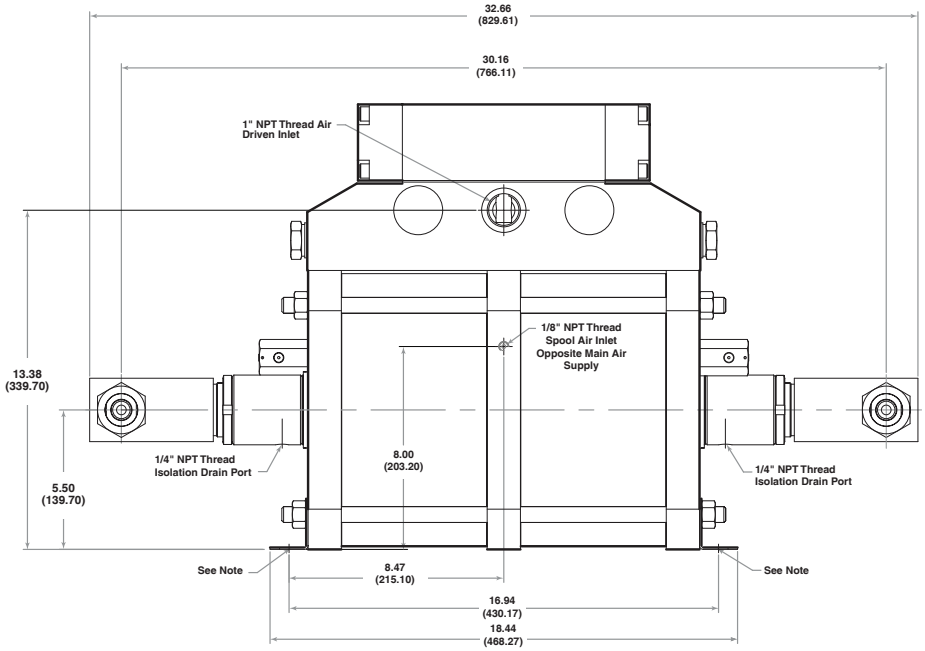

Front View

Note:

Each Mounting Bracket includes (2) x 0.50" (12.7) Slots for 7/16" Bolts.

Spool air tubing not shown for clarity.

All dimensions are for reference only and are subject to change without notice.

Primary Dimensions: Inches

Secondary Dimensions: (Millimeters)

Tel: +45 63 12 83 00 | Email: ps@hymatik.com | www.hymatik.com | Hvidkaervej 27a, DK-5250 Odense SV, Denmark

AFL

Series AFL

Tel: +45 63 12 83 00 | Email: ps@hymatik.com | www.hymatik.com | Hvidkaervej 27a, DK-5250 Odense SV, Denmark

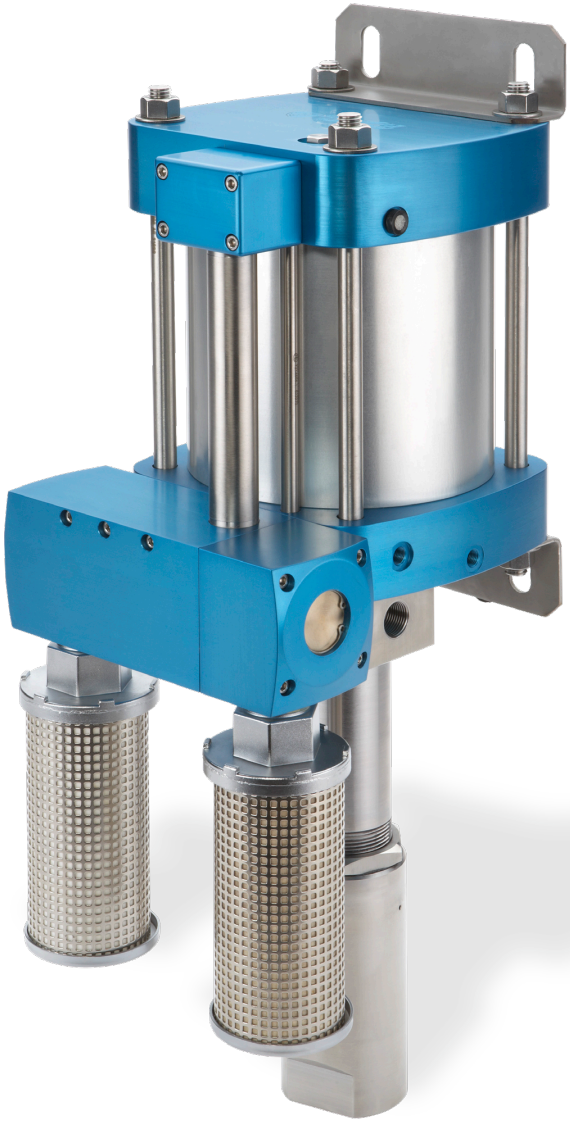

Series AFL35-1D (Double-Acting, Single Ended, Single Piston Air Drive)

Air-Driven, High Flow, High Pressure Liquid Pump

Technical & Performance Data Sheet

Manual: **02-9320BE** | January 2022

ENGINEERING YOUR SUCCESS.

Tel: +45 63 12 83 00 | Email: ps@hymatik.com | www.hymatik.com | Hvidkaervej 27a, DK-5250 Odense SV, Denmark

Technical Data

Section 1.0
Liquid Side Specifications

Service: Oil, Water or Water/Oil mixture and other fluids depending on material compatibility

Maximum Outlet Pressure: 5,600 psi (386 bar)

Air to Liquid Pressure Ratio: 1:39

Isolation Chamber: Prevents process contamination of air section - Standard

Volume Displacement Per Stroke: 6.02 in^3 (98.7 cm^3)

Inlet Connection: 1" NPT

Oulet Connections: Parker Autoclave F562C10-9/16" Female High Pressure

Section 2.0
Air Side Specifications

Air Drive Pressure Range: 15-150 psi (1.0-10 bar)* **(Note)**

Nominal Air Pressure Required: 5,600 psi (386 bar)
Output Pressure: 144 psi (9.9 bar)

Inlet Port: 3/4" FNPT

Pilot Port: 1/8" FNPT (unregulated air)

Exhaust Port (muffler removed): 1" NPT

Air Consumption @ 90 psi: 167 SCFM

Prelubricated at Factory

***Note:** Maximum air drive pressure is limited by maximum output pressure.

Section 3.0
General Specifications

Maximum Operating Temperature: 0-140° F (-18° to 60° C)

Net Weight: 51.8 lbs. (23.5 kg)

Pressure Head: 15-5 PH Stainless Steel

Plunger Description: Stainless steel plunger utilizing a proprietary multi-layer carbon based coating with diamond like carbon exterior layer - 3 times the hardness of stellite with a coefficient of friction equal to/less than PTFE

Check Valve Glands: 316 Stainless Steel (SS)

Liquid Seal: UHMWPE U-Cup with FKM O-Rings

Air Drive Seals: Buna N

Tel: +45 63 12 83 00 | Email: ps@hymatik.com | www.hymatik.com | Hvidkaervej 27a, DK-5250 Odense SV, Denmark

General Information

Section 4.0 - Ordering Guide

For complete information on available pump options, contact Parker Autoclave Engineers.

Typical catalog number: **AFL35-1DBCPV**

AFL35-1D	B	C	PV
Pump Type / Size / Ratio	**Liquid Inlet Location**	**Isolation Chamber**	**Liquid Seal Materials†**
ASL = • High Flow, High Pressure Pump • 6" Single Piston Air Drive • 1:39 Air-to-Liquid Pressure Ratio • Maximum 5,600 psi (386 bar) • Single Ended, Double Acting Liquid Head	**B** = Bottom	**C** = Included	***PV** = UHMWPE U-Cup with FKM O-Rings **PB** = UHMWPE U-Cup with Buna N O-rings **PC** = UHMWPE U-Cup with FFKM O-rings

Section 5.0 - Liquid Flow Rate vs. Outlet Pressure

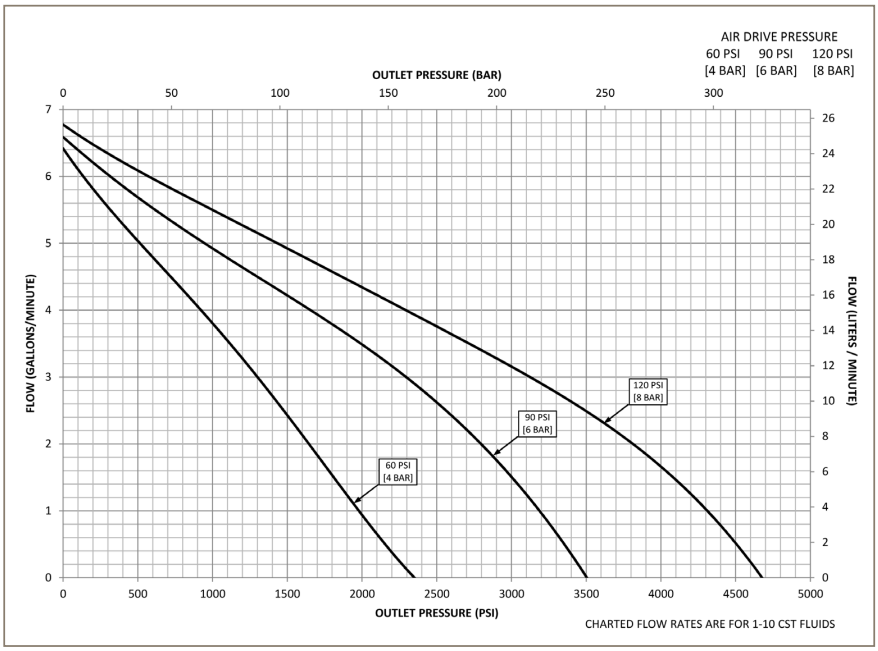

Actual flow rates will vary depending on air flow capacity, downstream flow restrictions, and fluid type.

Tel: +45 63 12 83 00 | Email: ps@hymatik.com | www.hymatik.com | Hvidkaervej 27a, DK-5250 Odense SV, Denmark

Section 6.0 - Dimensional Data

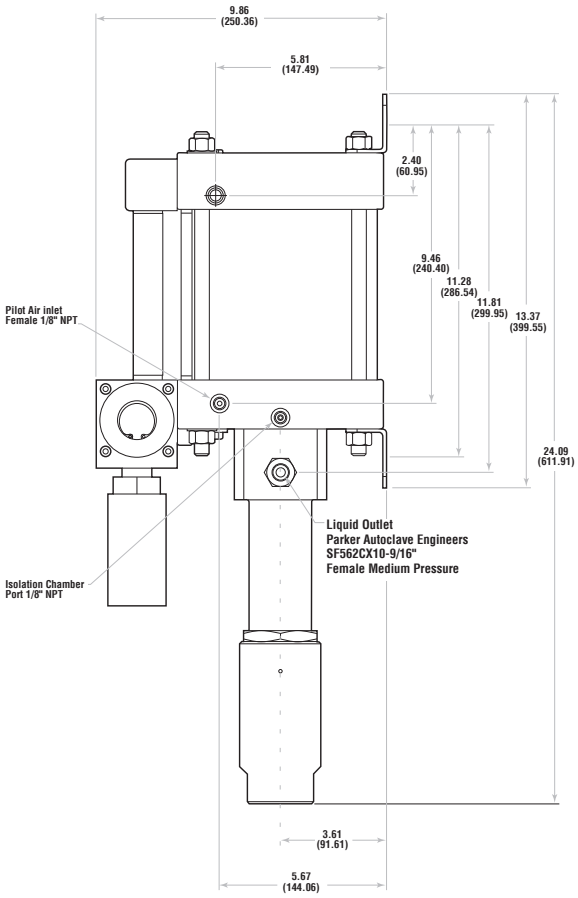

Right View

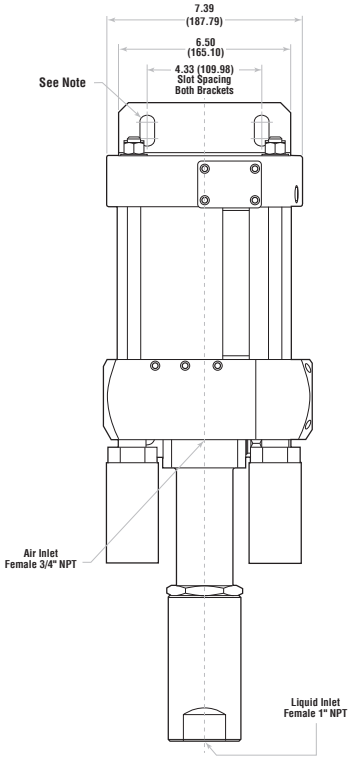

Front View

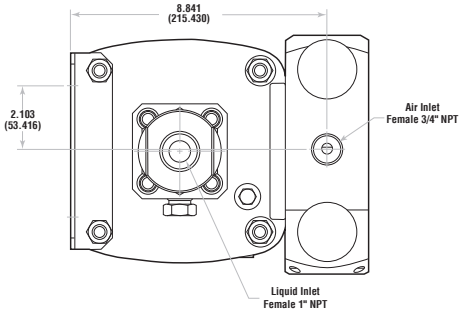

Bottom View

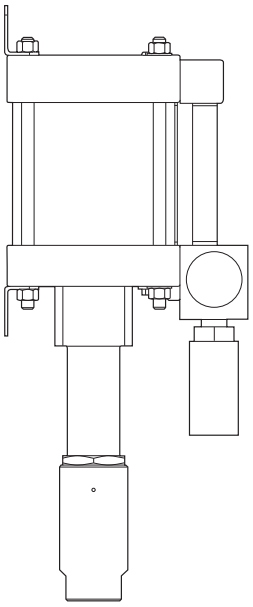

Left View

Note:

Each Mounting Bracket includes (2) 9/16" (14.29) slots for 1/2" Bolts.
All dimensions are for reference only and are subject to change without notice.
Primary Dimensions: Inches
Secondary Dimensions: (Millimeters)

Tel: +45 63 12 83 00 | Email: ps@hymatik.com | www.hymatik.com | Hvidkaervej 27a, DK-5250 Odense SV, Denmark

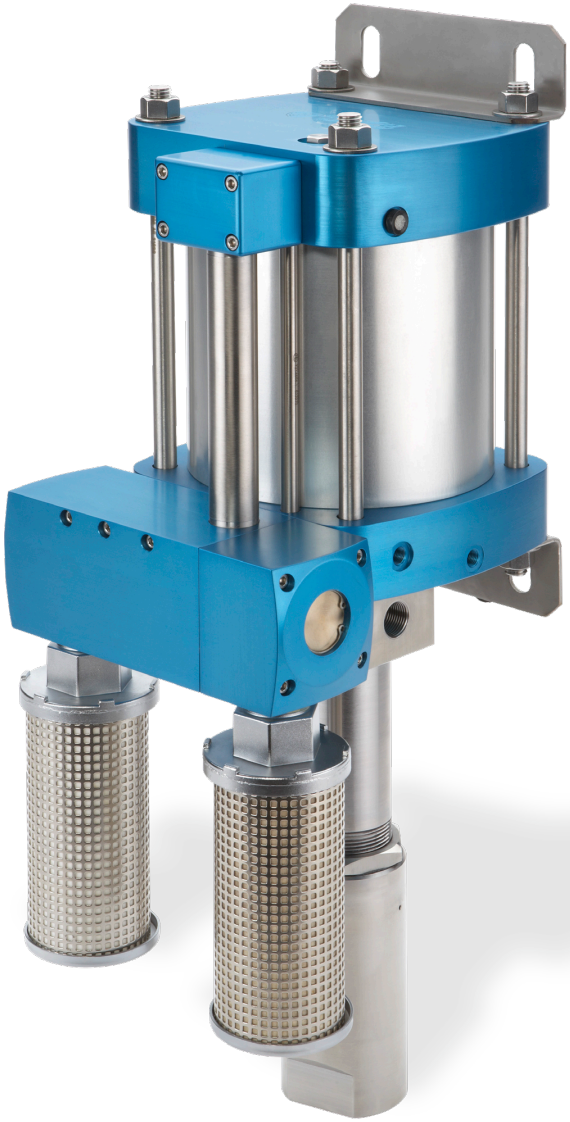

Series AFL60-1D (Double-Acting, Single Ended, Single Piston Air Drive)

Air-Driven, High Flow, High Pressure Liquid Pump

Technical & Performance Data Sheet

Manual: **02-9318BE** | January 2022

ENGINEERING YOUR SUCCESS.

Tel: +45 63 12 83 00 | Email: ps@hymatik.com | www.hymatik.com | Hvidkaervej 27a, DK-5250 Odense SV, Denmark

Technical Data

Section 1.0
Liquid Side Specifications

Service: Oil, Water or Water/Oil mixture and other fluids depending on material compatibility

Maximum Outlet Pressure: 10,000 psi (690 bar)

Air to Liquid Pressure Ratio: 1:70

Isolation Chamber: Prevents process contamination of air section - Standard

Volume Displacement Per Stroke: 3.40 in^3 (55.7 cm^3)

Inlet Connection: 1" NPT

Oulet Connections: Parker Autoclave F562C10-9/16" Female High Pressure

Section 2.0
Air Side Specifications

Air Drive Pressure Range: 15-150 psi (1.0-10 bar)* **(Note)**

Nominal Air Pressure Required: 10,000 psi (690 bar)
Output Pressure: 143 psi (9.9 bar)

Inlet Port: 3/4" FNPT

Pilot Port: 1/8" FNPT (unregulated air)

Exhaust Port (muffler removed): 1" NPT

Air Consumption @ 90 psi: 167 SCFM

Prelubricated at Factory

***Note:** Maximum air drive pressure is limited by maximum output pressure.

Section 3.0
General Specifications

Maximum Operating Temperature: 0-140° F (-18° to 60° C)

Net Weight: 51.8 lbs. (23.5 kg)

Pressure Head: 15-5 PH Stainless Steel

Plunger Description: Stainless steel plunger utilizing a proprietary multi-layer carbon based coating with diamond like carbon exterior layer - 3 times the hardness of stellite with a coefficient of friction equal to/less than PTFE

Check Valve Glands: 316 Stainless Steel (SS)

Liquid Seal: UHMWPE U-Cup with FKM O-Rings

Air Drive Seals: Buna N

Tel: +45 63 12 83 00 | Email: ps@hymatik.com | www.hymatik.com | Hvidkaervej 27a, DK-5250 Odense SV, Denmark

General Information

Section 4.0 - Ordering Guide

For complete information on available pump options, contact Parker Autoclave Engineers.

Typical catalog number: **AFL60-1DBCPV**

AFL60-1D	B	C	PV
Pump Type / Size / Ratio	**Liquid Inlet Location**	**Isolation Chamber**	**Liquid Seal Materials†**
ASL = • High Flow, High Pressure Pump • 6" Single Piston Air Drive • 1:70 Air-to-Liquid Pressure Ratio • Maximum 10,000 psi (690 bar) • Single Ended, Double Acting Liquid Head	**B** = Bottom	**C** = Included	***PV** = UHMWPE U-Cup with FKM O-Rings **PB** = UHMWPE U-Cup with Buna N O-rings **PC** = UHMWPE U-Cup with FFKM O-rings

Section 5.0 - Liquid Flow Rate vs. Outlet Pressure

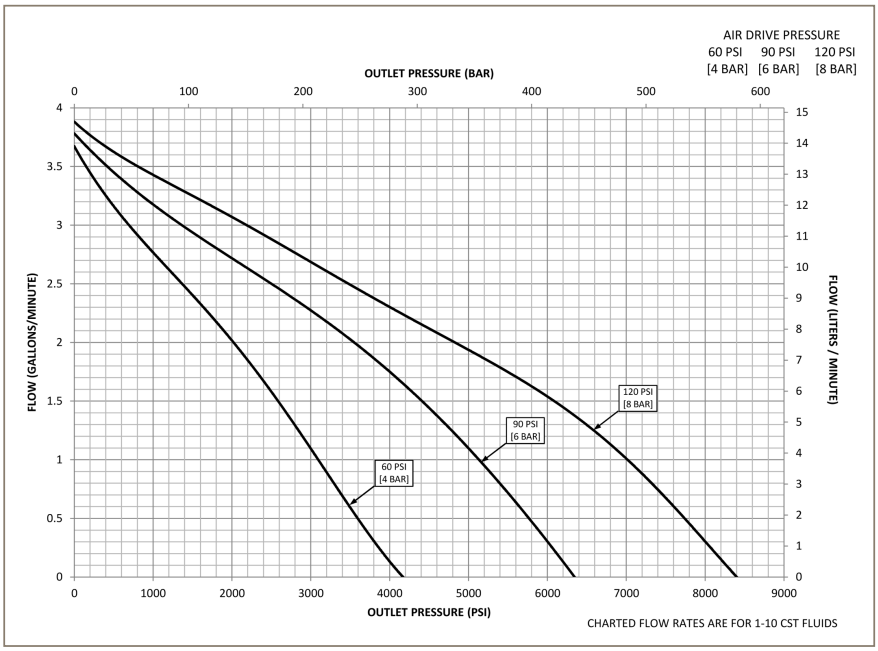

Actual flow rates will vary depending on air flow capacity, downstream flow restrictions, and fluid type.

Tel: +45 63 12 83 00 | Email: ps@hymatik.com | www.hymatik.com | Hvidkaervej 27a, DK-5250 Odense SV, Denmark

General Information

Section 6.0 - Dimensional Data

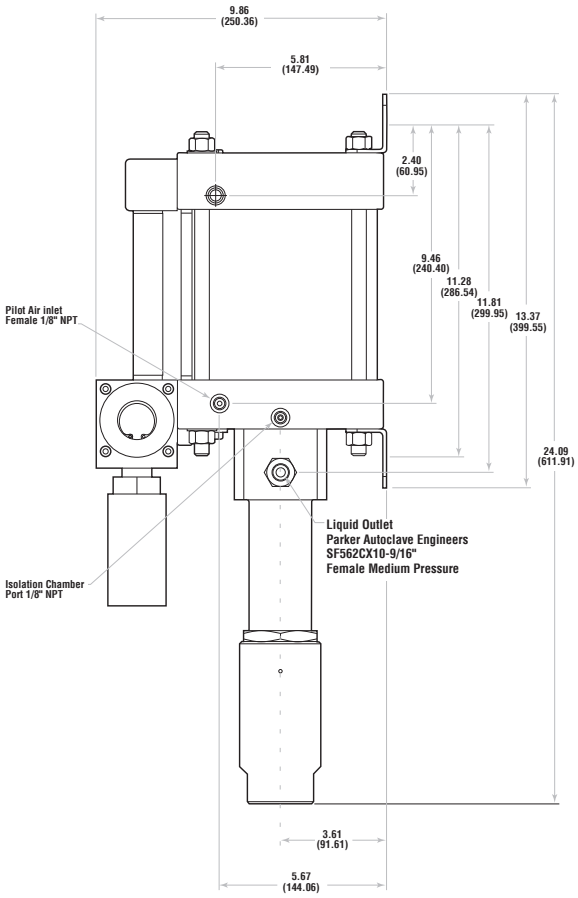

Right View

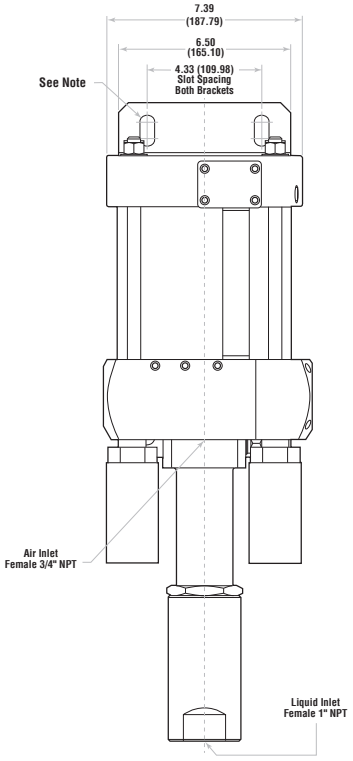

Front View

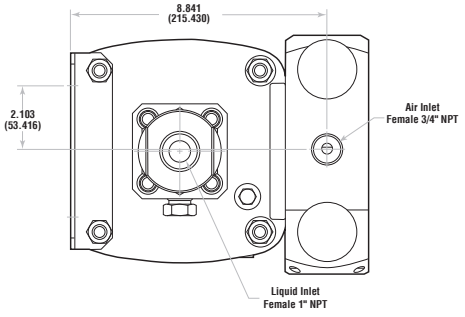

Bottom View

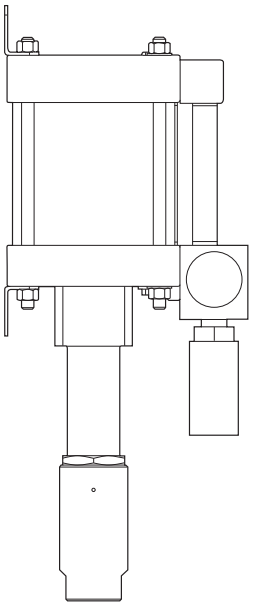

Left View

Note:

Each Mounting Bracket includes (2) 9/16" (14.29) slots for 1/2" Bolts.
All dimensions are for reference only and are subject to change without notice.
Primary Dimensions: Inches
Secondary Dimensions: (Millimeters)

Tel: +45 63 12 83 00 | Email: ps@hymatik.com | www.hymatik.com | Hvidkaervej 27a, DK-5250 Odense SV, Denmark

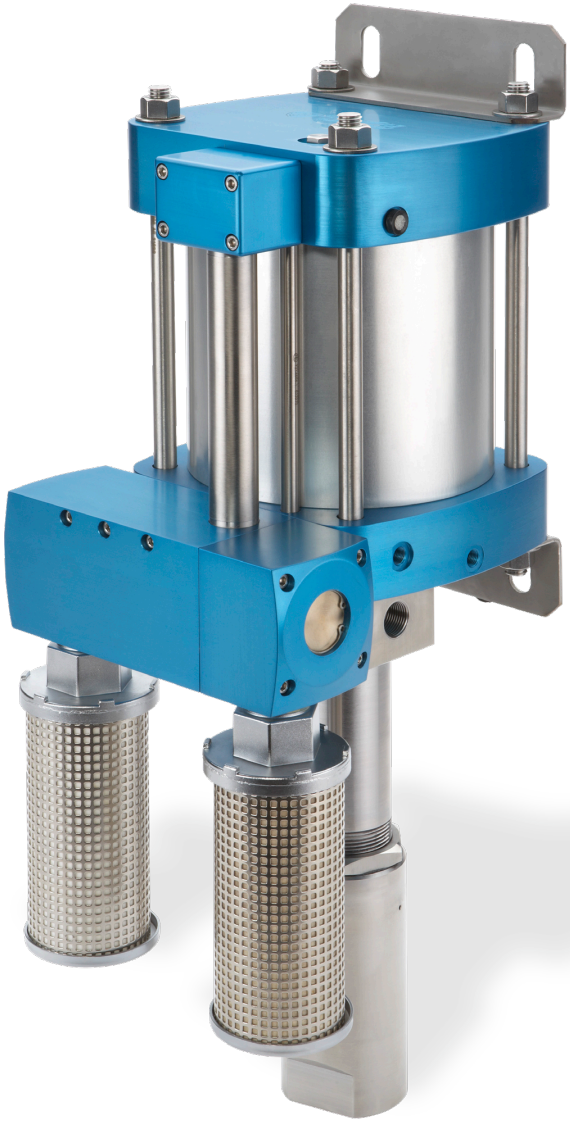

Series AFL100-1D (Double-Acting, Single Ended, Single Piston Air Drive)

Air-Driven, High Flow, High Pressure Liquid Pump

Technical & Performance Data Sheet

Manual: **02-9293BE** | January 2022

ENGINEERING YOUR SUCCESS.

Tel: +45 63 12 83 00 | Email: ps@hymatik.com | www.hymatik.com | Hvidkaervej 27a, DK-5250 Odense SV, Denmark

Technical Data

Section 1.0
Liquid Side Specifications

Service: Oil, Water or Water/Oil mixture and other fluids depending on material compatibility

Maximum Outlet Pressure: 15,000 psi (1034 bar)

Air to Liquid Pressure Ratio: 1:113

Isolation Chamber: Prevents process contamination of air section - Standard

Volume Displacement Per Stroke: 2.30 in^3 (37.7 cm^3)

Inlet Connection: 1" NPT

Oulet Connections: Parker Autoclave SF562CX10-9/16" Female High Pressure

Section 2.0
Air Side Specifications

Air Drive Pressure Range: 15-150 psi (1.0-10 bar)* **(Note)**

Nominal Air Pressure Required: 15,000 psi (1034 bar)
Output Pressure: 132.75 psi (9.15 bar)

Inlet Port: 3/4" FNPT

Pilot Port: 1/8" FNPT (unregulated air)

Exhaust Port (muffler removed): 1" NPT

Air Consumption @ 90 psi: 167 SCFM

Prelubricated at Factory

***Note:** Maximum air drive pressure is limited by maximum output pressure.

Section 3.0
General Specifications

Maximum Operating Temperature: 0-140° F (-18° to 60° C)

Net Weight: 51.8 lbs. (23.5 kg)

Pressure Head: 15-5 PH Stainless Steel

Plunger Description: Stainless steel plunger utilizing a proprietary multi-layer carbon based coating with diamond like carbon exterior layer - 3 times the hardness of stellite with a coefficient of friction equal to/less than PTFE

Check Valve Glands: 316 Stainless Steel (SS)

Liquid Seal: UHMWPE U-Cup with FKM O-Rings

Air Drive Seals: Buna N

Tel: +45 63 12 83 00 | Email: ps@hymatik.com | www.hymatik.com | Hvidkaervej 27a, DK-5250 Odense SV, Denmark

General Information

Section 4.0 - Ordering Guide

For complete information on available pump options, contact Parker Autoclave Engineers.

Typical catalog number: **AFL100-1DBCPV**

AFL100-1D	B	C	PV
Pump Type / Size / Ratio	**Liquid Inlet Location**	**Isolation Chamber**	**Liquid Seal Materials†**
ASL = • High Flow, High Pressure Pump • 6" Single Piston Air Drive • 1:113 Air-to-Liquid Pressure Ratio • Maximum 15,000 psi (1034 bar) • Single Ended, Double Acting Liquid Head	**B** = Bottom	**C** = Included	***PV** = UHMWPE U-Cup with FKM O-Rings **PB** = UHMWPE U-Cup with Buna N O-rings **PC** = UHMWPE U-Cup with FFKM O-rings

Section 5.0 - Liquid Flow Rate vs. Outlet Pressure

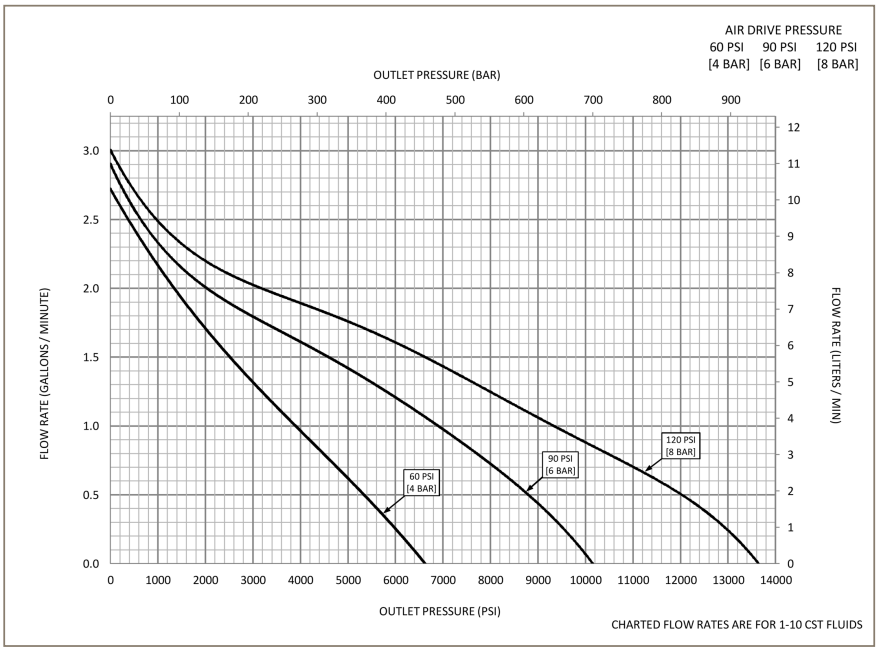

Actual flow rates will vary depending on air flow capacity, downstream flow restrictions, and fluid type.

Tel: +45 63 12 83 00 | Email: ps@hymatik.com | www.hymatik.com | Hvidkaervej 27a, DK-5250 Odense SV, Denmark

Section 6.0 - Dimensional Data

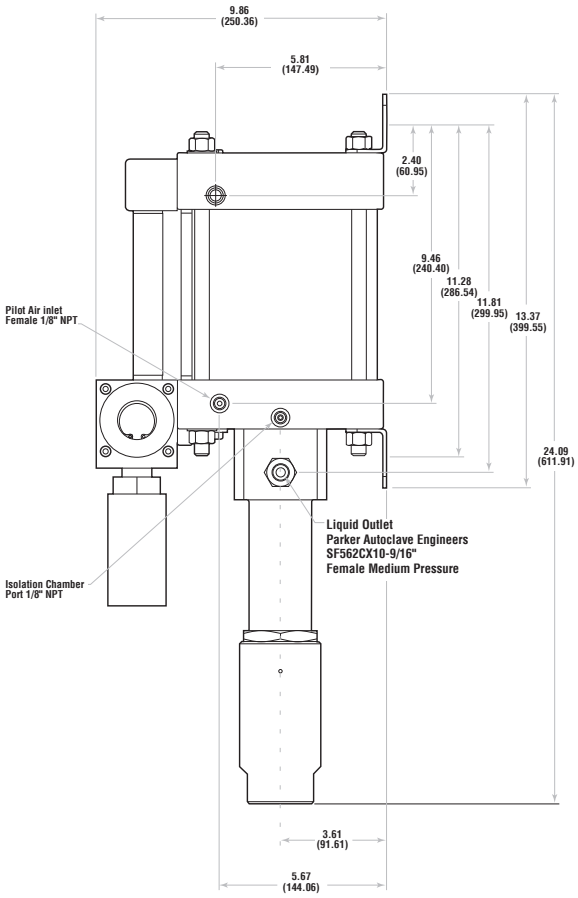

Right View

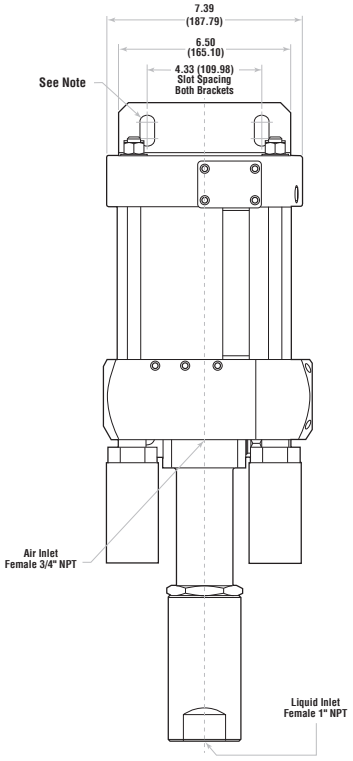

Front View

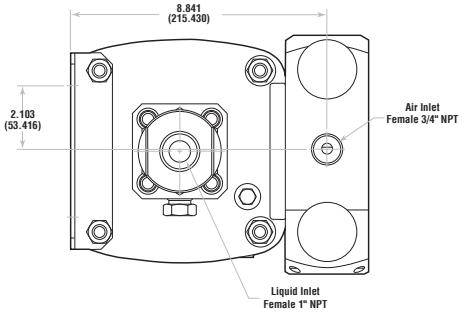

Bottom View

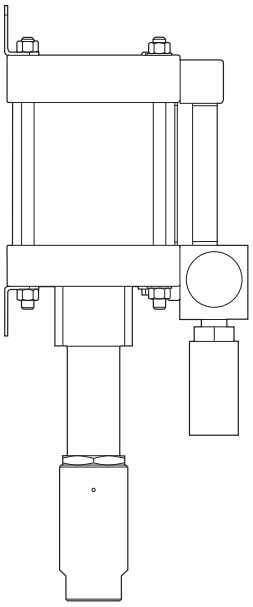

Left View

Note:

Each Mounting Bracket includes (2) 9/16" (14.29) slots for 1/2" Bolts.
All dimensions are for reference only and are subject to change without notice.
Primary Dimensions: Inches
Secondary Dimensions: (Millimeters)

Tel: +45 63 12 83 00 | Email: ps@hymatik.com | www.hymatik.com | Hvidkaervej 27a, DK-5250 Odense SV, Denmark

Parker Worldwide

North America

USA – Corporate, Cleveland, OH
Tel: +1 256 896 3000

USA – IPD, Huntsville, AL
Tel: +1 256 881 2040
ipdcct@parker.com

USA – IPD, (Autoclave), Erie, PA
Tel: +1 814 860 5700
ipdaecct@parker.com

CA – Canada, Grimsby, Ontario
Tel +1 905-945-2274
ipd_canada@parker.com

South America

AR – Argentina, Buenos Aires
Tel: +54 3327 44 4129
falecom@parker.com

BR – Brazil, Diadema, SP
Diadema, SP
Tel: +55 11 4360 6700
falecom@parker.com

CL – Chile, Santiago
Tel: +56 (0) 2 2303 9640
falecom@parker.com

MX – Mexico, Toluca
Tel: +52 722 275 4200
contacto@parker.com

Asia Pacific

AU – Australia, Dandenong
Tel: +61 (0)2 9842 5150
customer.service.au@parker.com

CN – China, Shanghai
Tel: +86 21 2899 5000
INGtechnical.china@parker.com

HK – Hong Kong
Tel: +852 2428 8008

IN – India, Mumbai
Tel: +91 22 6513 7081-85

ID – Indonesia, Tangerang
Tel: +62 2977 7900
parker.id@parker.com

JP – Japan, Tokyo
Tel: +(81) 3 6365 4020
infophj@parker.com

KR – South Korea, Seoul
Tel: +82 2 559 0400
parkerkr@parker.com

MY – Malaysia, Selangor
Tel: +603 784 90 800
parkermy@parker.com

SG – Singapore,
Tel: +65 6887 6300
parkersg@parker.com

TH – Thailand, Bangkok
Tel: +66 2 186 7000
phthailand@parker.com

TW – Taiwan, Taipei
Tel: +886 2 2298 8987
enquiry.taiwan@parker.com

VN – Vietnam, Hochi Minh City
Tel: +848 382 508 56
parker_viet@parker.com

Europe, Middle East, Africa

AE – UAE, Dubai
Tel: +971 4 812 7100
parker.me@parker.com

AT – Austria, Wiener Neustadt
Tel: +43 (0)2622 23501-0
parker.austria@parker.com

AT – Eastern Europe, Wiener Neustadt
Tel: +43 (0)2622 23501 900
parker.easteurope@parker.com

AZ – Azerbaijan, Baku
Tel: +994 50 2233 458
parker.azerbaijan@parker.com

BE/LU – Belgium, Nivelles
Tel: +32 (0)67 280 900
parker.belgium@parker.com

BG – Bulgaria, Sofia
Tel: +359 2 980 1344
parker.bulgaria@parker.com

BY – Belarus, Minsk
Tel: +48 (0)22 573 24 00
parker.belarus@parker.com

CH – Switzerland, Etoy
Tel: +41 (0) 21 821 87 00
parker.switzerland@parker.com

CZ – Czech Republic, Klecany
Tel: +420 284 083 111
parker.czechrepublic@parker.com

DE – Germany, Kaarst
Tel: +49 (0)2131 4016 0
parker.germany@parker.com

DK – Denmark, Ballerup
Tel: +45 43 56 04 00
parker.denmark@parker.com

ES – Spain, Madrid
Tel: +34 902 33 00 01
parker.spain@parker.com

FI – Finland, Vantaa
Tel: +358 (0)20 753 2500
parker.finland@parker.com

FR – France, Contamine s/Arve
Tel: +33 (0)4 50 25 80 25
parker.france@parker.com

GR – Greece, Athens
Tel: +30 210 933 6450
parker.greece@parker.com

HU – Hungary, Budapest
Tel: +36 223 885 470
parker.hungary@parker.com

IE – Ireland, Dublin
Tel: +353 (0)1 466 6370
parker.ireland@parker.com

IT – Italy, Corsico (MI)
Tel: +39 02 45 19 21
parker.italy@parker.com

KZ – Kazakhstan, Almaty
Tel: +7 7273 561 000
parker.easteurope@parker.com

NL – The Netherlands, Oldenzaal
Tel: +31 (0)541 585 000
parker.nl@parker.com

NO – Norway, Stavanger
Tel: +47 66 75 34 00
parker.norway@parker.com

PL – Poland, Warsaw
Tel: +48 (0)22 573 24 00
parker.poland@parker.com

PT – Portugal, Leca da Palmeira
Tel: +351 22 999 7360
parker.portugal@parker.com

RO – Romania, Bucharest
Tel: +40 21 252 1382
parker.romania@parker.com

RU – Russia, Moscow
Tel: +7 495 645-2156
parker.russia@parker.com

SE – Sweden, Spånga
Tel: +46 (0)8 59 79 50 00
parker.sweden@parker.com

SK – Slovakia, Banská Bystrica
Tel: +421 484 162 252
parker.slovakia@parker.com

SL – Slovenia, Novo Mesto
Tel: +386 7 337 6650
parker.slovenia@parker.com

TR – Turkey, Istanbul
Tel: +90 216 4997081
parker.turkey@parker.com

UA – Ukraine, Kiev
Tel: +48 (0)22 573 24 00
parker.ukraine@parker.com

UK – United Kingdom, Warwick
Tel: +44 (0)1926 317 878
parker.uk@parker.com

ZA – South Africa, Kempton Park
Tel: +27 (0)11 961 0700
parker.southafrica@parker.com

© 2022 Parker Hannifin Corporation | Instrumentation Products Division

02-9277BE February 2022

1005 A Cleaner Way
Huntsville, AL 35805 USA
Tel: 256.881.2040
Fax: 256.881.5072

www.Parker.com/IPD

8325 Hessinger Drive
Erie, PA 16509 USA
Tel: 814 860 5700
Fax: 814 860 5811

www.autoclave.com

Questions? Chat with Us, click on

Instrumentation Products Division

Technical & Performance Data Sheet Digest
Air-Driven, High Flow High Pressure Liquid Pumps