Parker

Solenoid Valves

for application in:

- ***AUTOMATION***
- ***HIGH TEMPERATURE - STEAM***
- ***HEATING***

Cat.: GP/GB
June 2006



Technical information

Index for identification of the type/series of valve required

Table for selecting solenoid valves based on fitting size, porting, function

The horizontal rows indicate the porting and the function of the solenoid valve series required.
The vertical columns indicate the size of the fittings for the series of solenoid valves included in the table.
The codes in the table identify the series (one or more) of valves with the required features in addition to the colour background as indicated on the right-hand page for their use.

Column indicating the operation of the various series of solenoid valves			Fitting G [”] or Rp, R where specified					
Porting	Rest. posit.	Control / Operation / Fittings	1/8	1/4	3/8	1/2	3/4	1
2/2	**N.C.**	Direct operated	131.4	131.4				
			146	146				
			N74	N74				
				126				
			140.2					
			161.4	161.4				
			131					
			131.4G	131.4G				
			140	140				
					153	153		
2/2	**N.C.**	Direct operated, 90’ fittings	158					
2/2	**N.O.**	Direct operated, reversed seat	120.4	120.4				
2/2	**N.O.**	Direct operated.		136				
				151				
2/2	**N.C.**	Diaphragm pilot operated, lateral pilot			133	133	133	133
					168.1	168.1	168.1	168.1
					173	173		
					133H	133H	133H	133H
2/2	**N.C.**	Diaphragm pilot operated, central pilot			156.2	156.2	156.2	156.2
2/2	**N.C.**	Piston pilot operated			135	135	135	135
2/2	**N.C.**	Combined operation, hung diaphragm			123	123	123	123
2/2	**N.O.**	Diaphr. pilot operated, lateral pilot			143	143	143	143
					169.1	169.1	169.1	169.1
3/2	**N.C.**	Direct operated	141	141				
			N79					
3/2	**N.C.**	Direct operated, flanged body						
3/2	**Univers.**	Direct operated	139	139				

Once the series required has been identified:
1: look up on pg. 3 the catalogue page corresponding to the series of solenoid valves;
2: go to the contents page of the section corresponding to the type of application (the second in the section): the section is indicated by the background colour of the box where the required series is identified. In this section you will find all the specific technical information on the double page of the series required.

Parker Hannifin S.p.A.
via E. Fermi, 5
20060 Gessate (Milano) - Italy

Technical information

Index for identification of the type/series of valve required

Table for selecting solenoid valves based on fitting size, porting, function

The background colours of the boxes correspond to the application section of the solenoid valve series indicated in the table:
For convenience, the solenoid valves which are:

normally open **N.O.** have a series code in the table printed in **LIGHT BLUE**
normally closed **N. C.** have a series code in the table printed in **RED**
of another type - **UNIVERSAL/BYPASS** have a series code in the table printed in **BLACK**

Fitting G [”] or Rp, R where specified						Column indicating the operation of the various series of solenoid valves		
1 1/4	1 1/2	2	2 1/2	3	FLANGED BODY	Porting	Rest. posit.	Control / Operation / Fittings
						2/2	**N.C.**	Direct operated
						2/2	**N.C.**	Direct operated, 90’ fittings
						2/2	**N.O.**	Direct operated, reversed seat
						2/2	**N.O.**	Direct operated.
133	133	133	133	133		**2/2**	**N.C.**	Diaphragm pilot operated, lateral pilot
133H	133H	133H						
						2/2	**N.C.**	Diaphragm pilot operated, central pilot
						2/2	**N.C.**	Piston pilot operated
						2/2	**N.C.**	Combined operation, hung diaphragm
143	143	143	143	143		**2/2**	**N.O.**	Diaphr. pilot operated, lateral pilot
						3/2	**N.C.**	Direct operated
					128	**3/2**	**N.C.**	Direct operated, flanged body
						3/2	**Univers.**	Direct operated

SOLENOID VALVES FOR AUTOMATION

SOLENOID VALVES FOR STEAM-HIGH TEMPERATURES

SOLENOID VALVES FOR HEATING

Parker Hannifin S.p.A.
via E. Fermi, 5
20060 Gessate (Milano) - Italy

General contents

TECHNICAL INFORMATION	pages
Selection and Nomenclature	1-2
General information and operating principles	7
General features and identification of solenoid valves	8-9
Basic components of solenoid valves and technical terminology	10-11
Construction materials	12
Conversion tables	13-15
Sectional drawings of solenoid valve types	16-19
Sizing solenoid valves	20-21
Diagrams for liquids, gases, dry saturated steam	22-24
Date coding	25
Media compatibility table	26-27
Coils	28-34
Solenoid valve accessories	35
SOLENOID VALVES FOR AUTOMATION	
Series **123**	40-41
Series **131.4**	42-43
Series **133**	44-45
Series **133 CMV**	46-47
Series **136**	48-49
Series **139**	50-51
Series **141**	52-53
Series **143**	54-55
Series **146**	56-57
Series **151**	58-59
Series **168.1**	60-61
Series **169.1**	62-63
Series **173**	64-65
Series **N74**	66-67
Series **N79**	68-69
SOLENOID VALVES FOR STEAM AND HIGH TEMPERATURES	
Series **126**	74-75
Series **128**	76-77
Series **133...H**	78-79
Series **135**	80-81
Series **140.2**	82-83
Series **156.2**	84-85
Series **158**	86-87
Series **161.4**	88-89
SOLENOID VALVES FOR HEATING	
Series **120.4**	94-95
Series **131**	96-97
Series **131.4...G**	98-99
Series **140**	100-101
Series **153**	102-103
SPARE PARTS	
Diaphgram	104
Rebuild kits	105-106

Parker Hannifin S.p.A.
via E. Fermi, 5
20060 Gessate (Milano) - Italy

Technical information

Technical information index

	pages
Selection and Nomenclature	1-2
General information and operating principles	7
General features and identification of solenoid valves	8-9
Basic components of solenoid valves	10
Technical terminology	11
Construction materials	12
Conversion tables	13-15
Sectional drawings of solenoid valve types	16-19
Sizing solenoid valves	20-21
Diagrams for liquids, gases, dry saturated steam	22-24
Date coding	25
Media compatibility table	26-27
Coils	28-34
Solenoid valve accessories	35

Parker Hannifin S.p.A.
via E. Fermi, 5
20060 Gessate (Milano) - Italy

Technical Information

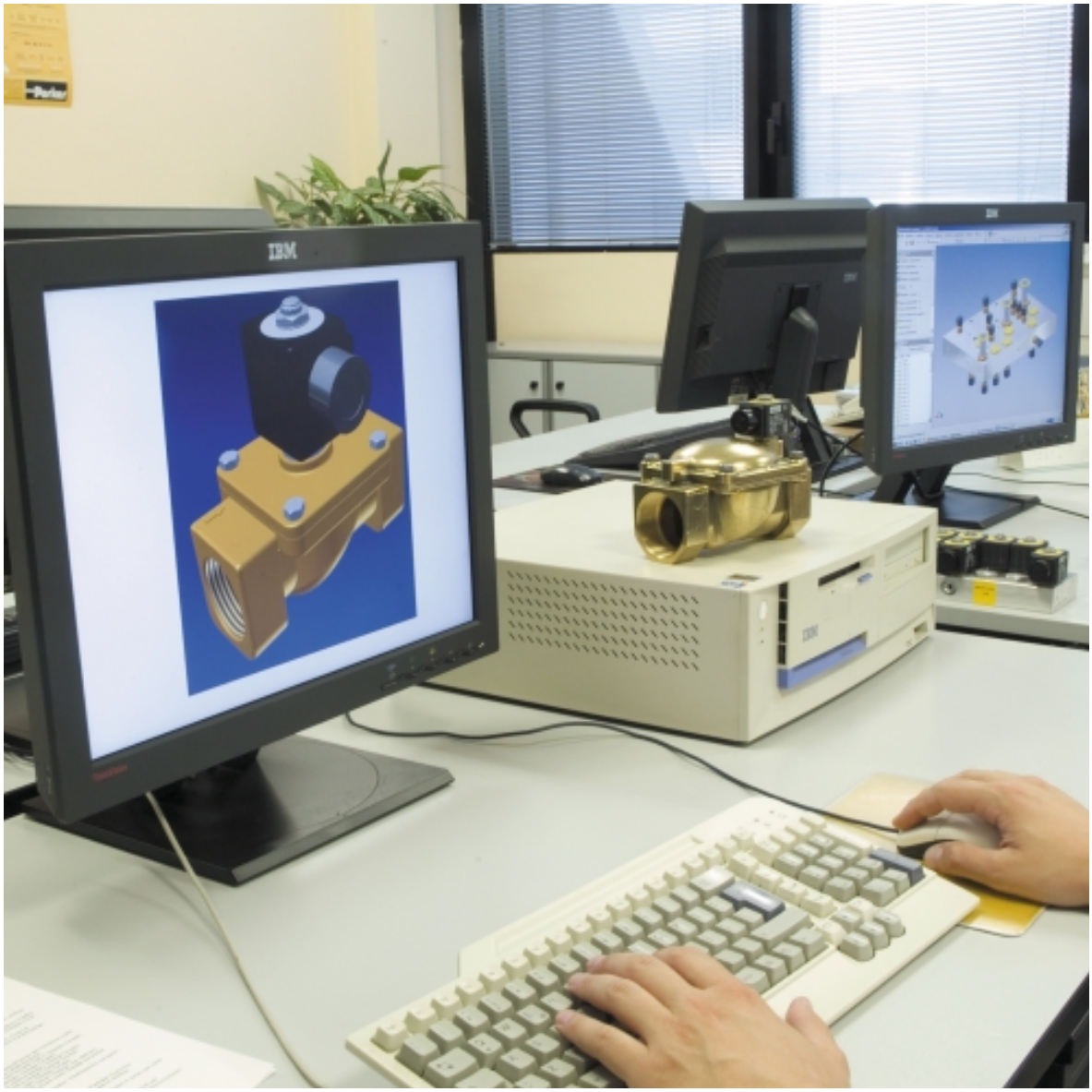

Parker Hannifin S.p.A.
via E. Fermi, 5
20060 Gessate (Milano) - Italy

Technical information

Parker Hannifin S.p.A.
via E. Fermi, 5
20060 Gessate (Milano) - Italy

General information

Solenoid valves may be defined as devices for interrupting or diverting the flow of fluids or gases in pipework.
They operate by opening or closing the orifice directly or by pilot operation by a solenoid operator (or electromagnet / coil).
The solenoid valve is a combination of three basic components:

1 Electromagnet consisting of a solenoid (windings) and a magnetic yoke (or magnetic armature).

2 Moveable plunger (which, in some cases, directly opens or closes the valve).

3 Valve-body with an orifice, opened or closed by plunger or diaphragm to enable or prevent flow of the medium.

Operating principles

The term “solenoid” does not refer to the valve itself, but to the operator and coil mounted on the moveable valve, also known as “pilot” or “magnetic actuator”.
The term “solenoid” dirives from the Greek “solen” which means “channel”.
The coil in fact “channels” a strong magnetic force in the the windings when the coil is energised, i.e. when electric current flows through it.
The coil consists of capillary copper wire wound on a support reel. When electric current is fed into the coil, magnetic flow lines are generated, which are stongest in the centre of the coil.
This magnetic flow raises the moveable plunger in the coil until it brings it into contact with the pole piece.
The valve body has an orifice through which the liquid or gas flows when the valve is open.
The moveable plunger has an integral seat which, when the solenoid coil is energised, moves off the valve (direct operated) orifice or diaphragm (pilot operated) orifice opening the valve.
When the coil is de-energised, a return spring repositions the plunger in the original closing position on the valve or diaphragm orifice, thus cutting off the flow of the fluid.

A - Flux
B - Pole piece core
C - Magnetic armature
D - Plunger
E - Copper wire (windings)

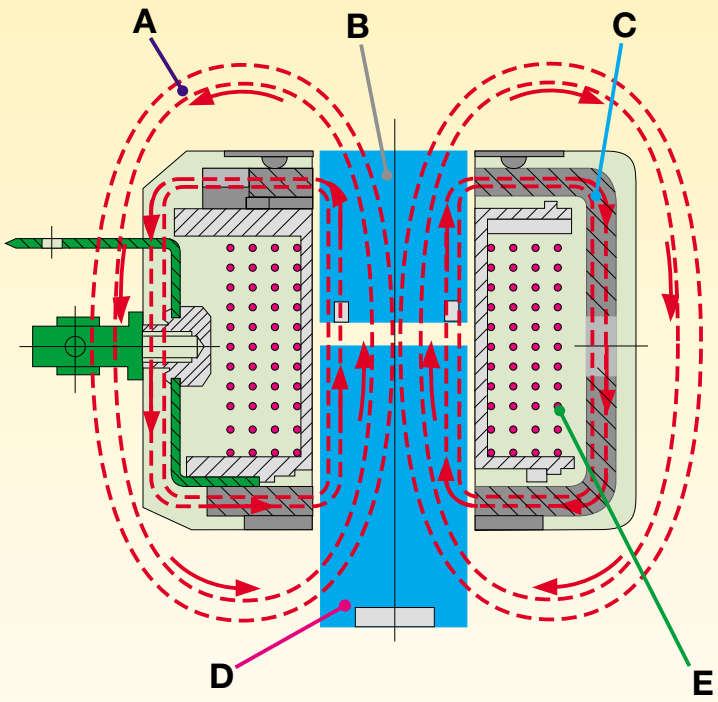

Parker Hannifin S.p.A.
via E. Fermi, 5
20060 Gessate (Milano) - Italy

Technical information

General features - Types of solenoid valves

General features

This section describes the operation of the solenoid valves, versions and types available, selecton tables and graphs, basic components, common technical terminology, conversion tables for solenoid valves in various units of measurement.

Principles of operation

In compact solenoid valves, the solenoid coil is mounted directly on the enclosing tube, sealed and integral with the valve body. The moveable plunger is free to move in the enclosing tube and is normally held in position by a thrust (or return) spring.
When the solenoid coil is energised, the plunger is attracted by the effect of the magnetic field and the seat, integral with the plunger, opens (or closes) the valve or the valve pilot.

Solenoid valves/versions available

a) direct acting
The moveable plunger with integral seat, by the action of the solenoid coil, opens or closes the orifice depending on whether current is supplied to the solenoid (energised or de-energised solenoid) or not.
In this direct operated design the coil itself supplies all the energy required to move the plunger and seat. Operation does not therefore depend on the pressure of the fluid or the flow rate.
The solenoid valve can operate from 0 pressure difference up to the value indicated in the tables.

b) Pilot operated
(servocontrolled or diaphragm pilot operated):
These solenoid valves are fitted with a pilot seat, controlled by the solenoid coil and a diaphragm which closes the main orifice of the valve, using the fluid pressure for operation. When the solenoid is energised, the core opens the pilot seat to allow the pressure on the upper part of the diaphragm to flow to the outlet of the valve body. Thus a pressure imbalance is created on the diaphragm, raising it and fully opening the valve orifice.
When the solenoid is de-energised, the pilot seat closes and the pressure, passing through an “equaliser” hole, is restored above the diaphragm, thus closing the valve.
Operation depends on a pressure difference between upstream and downstream of the solenoid valve which equals the force required for moving the diaphragm or keeping it tight on the main orifice. This value, indicated in the tables, is known as “minimum operating pressure”.

c) Combined operation
In this design the moveable plunger is physically connected to the diaphragm in which the pilot orifice is located.
The attraction of the plunger thus opens the pilot orifice and the pressure lifts the diaphragm which is further moved by the plunger during its opening stroke (assisted lift). Thus by direct operation (plunger) and pilot operation (diaphragm) it is possible to achieve full flow even at low pressures and normal operation (and shut off) even at 0 pressure.

Types of solenoid valves

According to their application, the following types are available:

a) 2-way solenoid valves (2 positions):
they have two ports (one inlet and one outlet) and an orifice passage and are divided into:

- **Normally closed:**
  they open
  when the electromagnet or coil is energised (Fig. 1).

- **Normally open:**
  they close
  when the electromagnet or coil is energised (Fig. 2).

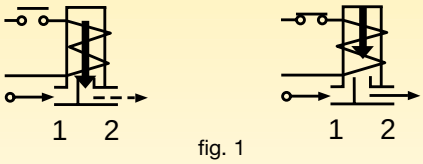

fig. 1

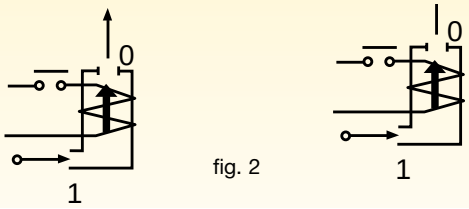

fig. 2

Parker Hannifin S.p.A.
via E. Fermi, 5
20060 Gessate (Milano) - Italy

Types of solenoid valves

b) 3-way solenoid valves (2 positions):
they have three ports and two orifice passages, one always open, the other always closed.
They are divided into:

- **Normally closed:**
  2 = inlet
  1 = outlet
  0 = exhaust
  (Fig. 3)

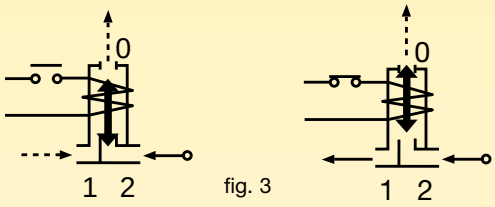

- **Normally open:**
  0 = inlet
  1 = outlet
  2 = exhaust
  (Fig. 4)

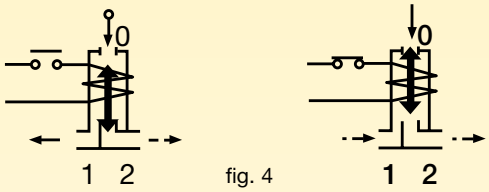

- **Diverting valves:**
  1 = inlet
  0 = outlet
  2 = outlet
  (Fig. 5)

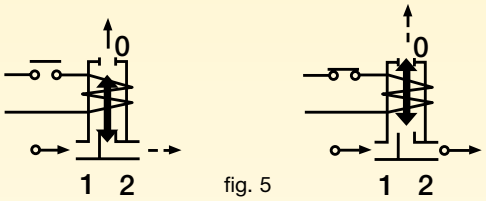

- **Circuit switching valves:**
  0 = inlet
  2 = inlet
  1 = outlet
  (Fig. 6)

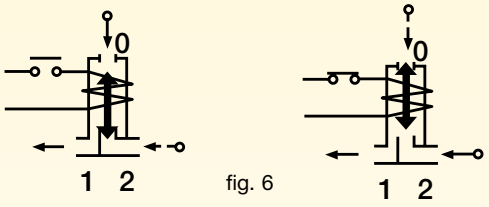

- **Universal:**
  they may have the four functions described above.
  (Fig. 7)

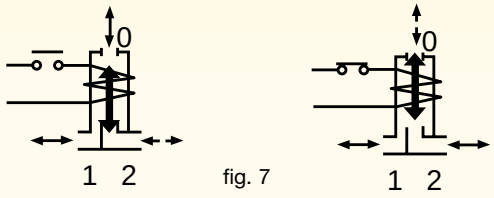

Response times:
They depend on the following factors: type of current (a.c. - d.c.), fluid, viscosity, type of operation, size of the solenoid valve.

For the direct acting type (2 or 3 way) and small diameters up to approx. 3 mm, orifice response time may be around tens of milliseconds.

Parker Hannifin S.p.A.
via E. Fermi, 5
20060 Gessate (Milano) - Italy

Technical information

Basic components of solenoid valves

Basic components of solenoid valves

Valve body:
main part of the solenoid valve with the ports, seats and orifice passages.
In almost all Parker-Scem products the bodies are made of brass stampings, while other materials are used in some special versions.

Enclosing tube assembly:
cylinder, normally in stainless steel, hermetically sealed and closed at one end.
It forms the housing and guide for the moveable plunger which is moved magnetically. The solenoid coil is fitted on the exterior of the enclosing tube.

It consists of:

•Pole piece:
Acts as a stop for the moveable plunger (=MP) and it is used to shield the magnetic flow. (Usually made of magnetic stainless steel).

•Phase displacement (or shading) ring:
Normally made of copper, it is inserted on the surface of the pole piece to prevent a/c hum.

•Enclosing tube:
Normally made of stainless steel, it is used as a guide for the moveable plunger (=MP). It is normally assembled with the pole piece and the bonnet.

•Bonnet:
A threaded nut or square flange which secures the magnetic operator assembly to the valve body.

Moveable plunger:
Made of stainless steel, magnetic, it is actuated by the solenoid and slides inside the tube.

Plunger spring (or return spring):
Used to hold the MP in position and to return it into position after the action of the solenoid.

Seat seal (or pad):
Normally mounted on the MP, it is used to close the orifice of the valve or pilot.

Diaphragm:
In servocontrolled solenoid valves it acts as a servocontrol which, actuated by means of an solenoid pilot and by pressure, opens or closes the main orifice in the valve body.

Support Plate:
A perforated disc located in the valve body to support the diaphragm

Electromagnet (or solenoid coil):
Electrical part consisting of a copper windings (solenoid) which, with a magnetic yoke (armature), when electric current flows through it, generates a magnetic flux attracting the plunger.

For technical details, consult the specific section on Electromagnets.

N.B.
On request for various pilots, the electromagnet, enclosing tube and MP (with seal disc and spring) can be supplied separately as a MAGNETIC OPERATOR.

Parker Hannifin S.p.A.
via E. Fermi, 5
20060 Gessate (Milano) - Italy

Technical terminology for using the tables

The basic technical features
of each solenoid valve model
are indicated in the tables
with the following headings:

Fittings (ports):
according to the application of the solenoid valves fittings may be:
- threaded in inches (G);
- special where indicated (see solenoid valve drawing).

Passage (ND):
main orifice diameter
(orifice)
(nominal diameter)

Flow coefficient:
the quantity of water, from +5°C to +30°C, which flows through the solenoid valve with a pressure drop of 1 bar (100 KPa-0.1 MPa) expressed in m³/h (cubic metres per hour).

Minimum operating pressure:
the lowest differential pressure required for operation, expressed in bar.
In **"direct operated"**
solenoid valves a minimum pressure drop **is not required.**
In **"servocontrolled"**
solenoid valves the minimum differential pressure indicated in the table is required.

Maximum operating pressure differential (M.O.P.D.):
the highest working differential pressure with 90% of the rated voltage (-10% Vn) applied to the solenoid coil (for a.c.) and with 95% of the rated voltage (-5% Vn) (for d.c.).

NP - Maximum test pressure:
the maximum static pressure which can be applied to the solenoid valve to check the tightness of the mechanical seals (threads, welds) and the mechanical resistance of the materials.
We recommend applying this pressure
simultaneously to all fittings
to avoid damage to the internal parts, in particular the seals.

Safe working pressure (S.W.P.):
the line or system pressure to which the valve can be subjected safely.

Valve type:
see example of solenoid valve nomenclature.

Coil type:
see coil coding example.

Power:
the rated power under normal conditions of the solenoid expressed in W.

Materials:
Body - main material of the valve body:
BR = brass
Seals - materials used for seal disc, diaphragms, gaskets.

The following abbreviations are used:

N = NBR (nitrile butadene rubber)
•Synthetic elastomer of standard quality for neutral fluids, such as air, water and oils with working temperatures from -10°C to +90°C.

F = CR (chloroprene)
•Synthetic elastomer particularly suitable for water, mineral oils, refrigerants, with working temperatures from -30°C to +90°C.

H = EPDM (ethylene propylene)
•Synthetic elastomer suitable for hot water and steam with working temperatures from -10°C to +140°C.

V = FPM (Viton)
•Fluorinated elastomer suitable for oils, fuel gases, petrols and solvents. Working temperatures from -10°C to +140°C.

R = Ruby
•Synthetic corundum (hard stone) with high hardness values and total inertia for all types of fluids.
Working temperatures from -40°C to +180°C.

T = PTFE (Teflon)
•Plastic material without springback and inert to most fluids, including refrigerants.
Working temperatures from -40°C to +180°C.
In the case of "Teflon diaphragm ", this refers to a glass fiber fabric between two layers of PTFE.

L = PTFE with filler (Rulon)
•Plastic material with coloured mineral fillers, without springback, inert to most fluids, including refrigerants.
Working temperature from -40°C to +180°C.
More resistant than virgin PTFE to compression and wear.

Weight:
weight of the complete valve without accessories (kg).

For further explanation on how to use the tables see pp 2-3.

Parker

Parker Hannifin S.p.A.
via E. Fermi, 5
20060 Gessate (Milano) - Italy

Technical information

Construction materials

Materials of solenoid valves for industrial applications

1) **Valve body:** brass stamping - CW617N UNIEN 12163:98.
2) **Seals (gaskets - discs - diaphragms):**
   N = NBR
   H = EPDM
   V = Viton
   R = Ruby
   T = PTFE
3) **Enclosing tube:** AISI 304 - stainless steel (DIN 1.4301).
4) **Plungers (fixed and moveable):** AISI 430 FR - stainless steel (DIN 1.4104).
5) **Spring:** AISI 302 - stainless steel (DIN 1.4319).
6) **Solder:** silver alloy (56% Ag).
7) **Phase displacement ring:** copper (98% Cu).
8) **Cover screws:** stainless steel with surface treatment.
9) **Coil:** see pages 30-32
10) **Nameplate:** aluminium.
11) **Spring washer:** steel for springs with white galvanising.
12) **Coil nut:** white galvanised steel.

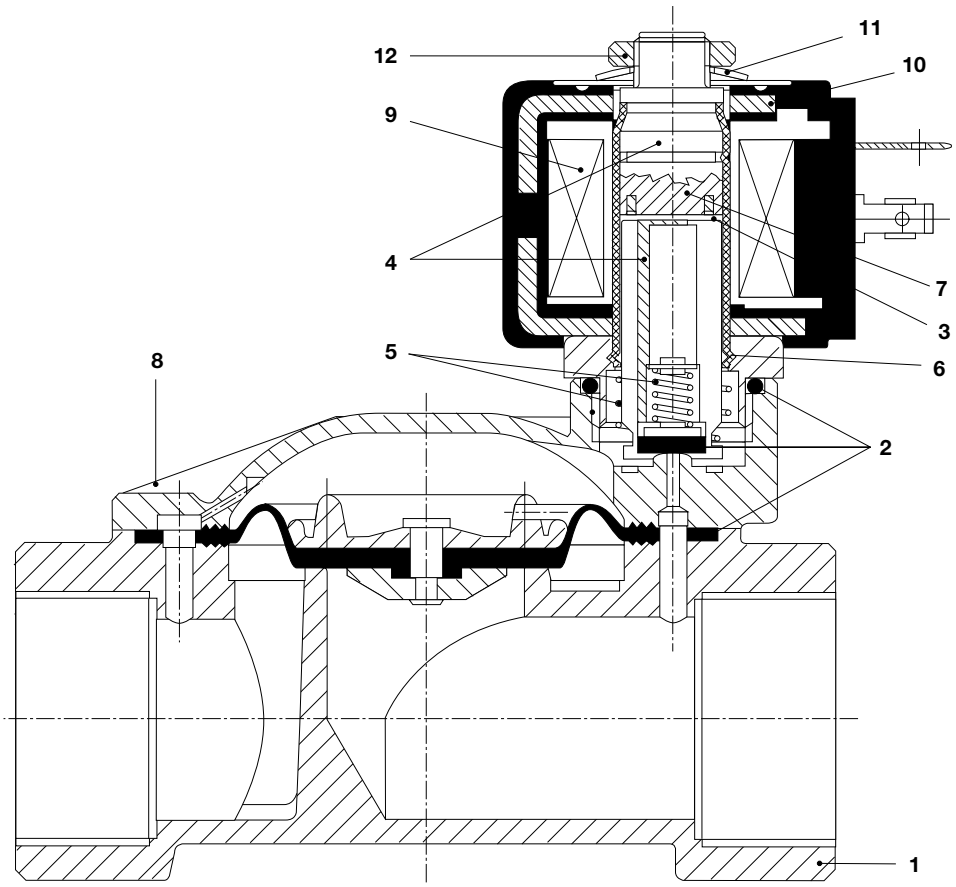

Parker Hannifin S.p.A.
via E. Fermi, 5
20060 Gessate (Milano) - Italy

Viscosity conversion table

Centistokes	°Engler	Saybolt Universal Second	Redwood Second n.1	Centistokes	°Engler	Saybolt Universal Second	Redwood Second n.1
cStokes mm²/S	°E	SSU	SRW n.1	cStokes mm²/S	°E	SSU	SRW n.1
1	1	—	—	115	15	525	465
12	2	65	55	150	20	685	610
22	3	100	90	200	26	910	810
30	4	140	120	300	39	1385	1215
38	5	175	155	400	53	1820	1620
45	6	210	185	500	66	2275	2025
60	8	275	245	750	97	3365	2995
75	10	345	305	1500	197	6820	6075
90	12	415	370				

Note: there are no common factors between these units and the S.I. official system.

The table above is only a reference for comparison between the various units.

Pressure conversion table

bar	N/cm²	MPa	Psi	bar	N/cm²	MPa	Psi	bar	N/cm²	MPa	Psi
0,1	1	0,01	1,450	7,0	70	0,70	101,500	25,0	250	2,50	362,500
0,2	2	0,02	2,900	7,5	75	0,75	108,750	26,0	260	2,60	377,000
0,3	3	0,03	4,350	8,0	80	0,80	116,000	27,0	270	2,70	391,500
0,4	4	0,04	5,800	8,5	85	0,85	123,250	28,0	280	2,80	406,000
0,5	5	0,05	7,250	9,0	90	0,90	130,500	29,0	290	2,90	420,500
0,6	6	0,06	8,700	9,5	95	0,95	137,750	30,0	300	3,00	435,000
0,7	7	0,07	10,150	10,0	100	1,00	145,000	35,0	350	3,50	507,500
0,8	8	0,08	11,600	11,0	110	1,10	159,950	40,0	400	4,00	580,000
0,9	9	0,09	13,050	12,0	120	1,20	174,000	45,0	450	4,50	652,500
1,0	10	0,10	14,500	13,0	130	1,30	188,500	50,0	500	5,00	725,000
1,5	15	0,15	21,750	14,0	140	1,40	203,000	55,0	550	5,50	797,500
2,0	20	0,20	29,000	15,0	150	1,50	217,500	60,0	600	6,00	870,000
2,5	25	0,25	36,250	16,0	160	1,60	232,000	65,0	650	6,50	942,500
3,0	30	0,30	43,500	17,0	170	1,70	246,500	70,0	700	7,00	995,400
3,5	35	0,35	50,750	18,0	180	1,80	261,000	75,0	750	7,50	1015,000
4,0	40	0,40	58,000	19,0	190	1,90	275,500	80,0	800	8,00	1160,000
4,5	45	0,45	65,250	20,0	200	2,00	290,000	85,0	850	8,50	1232,500
5,0	50	0,50	72,500	21,0	210	2,10	204,500	90,0	900	9,00	1305,000
5,5	55	0,55	79,750	22,0	220	2,20	319,000	95,0	950	9,50	1377,500
6,0	60	0,60	87,000	23,0	230	2,30	333,500	100,0	1000	10,00	1450,000
6,5	65	0,65	94,250	24,0	240	2,40	348,000				

1 Kg/cm² = 0,981 bar	1 bar = 10 N/cm²	1 bar = 0,1 MPa	1 bar = 14,5 Psi

Parker Hannifin S.p.A.
via E. Fermi, 5
20060 Gessate (Milano) - Italy

Technical information

Temperature conversion table

°C	K	°F	°C	K	°F	°C	K	°F	°C	K	°F
-50	223	-58,0	1	274	33,8	51	324	123,8	105	378	221,0
-49	224	-56,2	2	275	35,6	52	325	125,6	110	383	230,0
-48	225	-54,4	3	276	37,4	53	326	127,4	115	388	239,0
-47	226	-52,6	4	277	39,2	54	327	129,2	120	393	248,0
-46	227	-50,8	5	278	41,0	55	328	131,0	125	398	257,0
-45	228	-49,0	6	279	42,8	56	329	132,8	130	403	266,0
-44	229	-47,2	7	280	44,6	57	330	134,6	135	408	275,0
-43	230	-45,4	8	281	46,4	58	331	136,4	140	413	284,0
-42	231	-43,6	9	282	48,2	59	332	138,2	145	418	293,0
-41	232	-41,8	10	283	50,0	60	333	140,0	150	423	302,0
-40	233	-40,0	11	284	51,8	61	334	141,8	155	428	311,0
-39	234	-38,2	12	285	53,6	62	335	143,6	160	433	320,0
-38	235	-36,4	13	286	55,4	63	336	145,4	165	438	329,0
-37	236	-34,6	14	287	57,2	64	337	147,2	170	443	338,0
-36	237	-32,8	15	288	59,0	65	338	149,0	175	448	347,0
-35	238	-31,0	16	289	60,8	66	339	150,8	180	453	356,0
-34	239	-29,2	17	290	62,6	67	340	152,6	185	458	365,0
-33	240	-27,4	18	291	64,4	68	341	154,4	190	463	374,0
-32	241	-25,6	19	292	66,2	69	342	156,2	195	468	383,0
-31	242	-23,8	20	293	68,0	70	343	158,0	200	473	392,0
-30	243	-22,0	21	294	69,8	71	344	159,8	205	478	401,0
-29	244	-20,2	22	295	71,6	72	345	161,6	210	483	410,0
-28	245	-18,4	23	296	73,4	73	346	163,4	215	488	419,0
-27	246	-16,6	24	297	75,2	74	347	165,2	220	493	428,0
-26	247	-14,8	25	298	77,0	75	348	167,0	225	498	437,0
-25	248	-13,0	26	299	78,2	76	349	168,8	230	503	446,0
-24	249	-11,2	27	300	80,6	77	350	170,6	235	508	455,0
-23	250	- 9,4	28	301	82,4	78	351	172,4	240	513	464,0
-22	251	- 7,6	29	302	84,2	79	352	174,2	245	518	473,0
-21	252	- 5,8	30	303	86,0	80	353	176,0	250	523	482,0
-20	253	- 4,0	31	304	87,8	81	354	177,8	255	528	491,0
-19	254	- 2,2	32	305	89,6	82	355	179,6	260	533	500,0
-18	255	- 0,4	33	306	91,4	83	356	181,4	265	538	509,0
-17	256	1,4	34	307	93,2	84	357	183,2	270	543	518,0
-16	257	3,2	35	308	95,0	85	358	185,0	275	548	527,0
-15	258	5,0	36	309	96,8	86	359	186,8	280	553	536,0
-14	259	6,8	37	310	98,6	87	360	188,6	285	558	545,0
-13	260	8,6	38	311	100,4	88	361	190,4	290	563	554,0
-12	261	10,4	39	312	102,2	89	362	192,2	295	568	563,0
-11	262	12,2	40	313	104,0	90	363	194,0	300	573	572,0
-10	263	14,0	41	314	105,8	91	364	195,8	310	583	590,0
- 9	264	15,8	42	315	107,6	92	365	197,6	320	593	608,0
- 8	265	17,6	43	316	109,4	93	366	199,4	330	603	626,0
- 7	266	19,4	44	317	111,2	94	367	201,2	340	613	644,0
- 6	267	21,2	45	318	113,0	95	368	203,0	350	523	662,0
- 5	268	23,0	46	319	114,8	96	369	204,8	360	633	680,0
- 4	269	24,8	47	320	116,6	97	370	206,6	370	643	698,0
- 3	270	26,6	48	321	118,4	98	371	208,4	380	653	716,0
- 2	271	28,4	49	322	120,2	99	372	210,2	390	663	734,0
- 1	272	30,2	50	323	122,0	100	373	212,0	400	673	752,0
0	273	32,0									

K = °C + 273 | **°F = (°C x 9/5) + 32** | **°C = (F - 32) x 5/9**

Parker Hannifin S.p.A.
via E. Fermi, 5
20060 Gessate (Milano) - Italy

Flow rate conversion table

l/min	m³/h	l/min	m³/h	l/min	m³/h	l/min	m³/h
0,1	0,006	26	1,560	120	7,202	320	19,207
0,2	0,012	27	1,620	125	7,503	330	19,807
0,3	0,018	28	1,680	130	7,803	340	20,408
0,4	0,024	29	1,740	135	8,103	350	21,008
0,5	0,030	30	1,800	140	8,403	360	21,608
0,6	0,036	31	1,860	145	8,703	370	22,208
0,7	0,042	32	1,920	150	9,002	380	22,809
0,8	0,048	33	1,980	155	9,303	390	23,409
0,9	0,054	34	2,040	160	9,603	400	24,009
1,0	0,060	35	2,100	165	9,904	410	24,609
1,5	0,090	36	2,160	170	10,204	420	25,210
2,0	0,120	37	2,220	175	10,504	430	25,810
2,5	0,150	38	2,280	180	10,804	440	26,410
3,0	0,180	39	2,340	185	11,104	450	27,010
3,5	0,210	40	2,410	190	11,404	460	27,611
4,0	0,240	41	2,461	195	11,704	470	28,211
4,5	0,270	42	2,521	200	12,004	480	28,811
5,0	0,300	43	2,581	205	12,304	490	29,411
6,0	0,360	44	2,641	210	12,605	500	30,012
7,0	0,420	45	2,701	215	12,905	510	30,612
8,0	0,480	46	2,761	220	13,205	520	31,212
9,0	0,540	47	2,821	225	13,505	530	31,812
10	0,600	48	2,881	230	13,805	540	32,413
11	0,660	49	2,941	235	14,105	550	33,013
12	0,720	50	3,001	240	14,405	560	33,613
13	0,780	55	3,301	245	14,705	570	34,213
14	0,840	60	3,601	250	15,006	580	34,813
15	0,900	65	3,901	255	15,306	590	35,414
16	0,960	70	4,201	260	15,606	600	36,014
17	1,020	75	4,501	265	15,906	650	39,015
18	1,080	80	4,801	270	16,206	700	40,016
19	1,140	85	5,102	275	16,506	750	45,018
20	1,200	90	5,402	280	16,806	800	48,019
21	1,260	95	5,702	285	17,106	850	51,020
22	1,320	100	6,002	290	17,407	900	54,021
23	1,380	105	6,302	295	17,707	1000	60,024
24	1,440	110	6,602	300	18,007		
25	1,500	115	6,902	310	18,607		

$m^3/h = l/min \times 0,06$	$l/min = m^3/h \times 16,67$	$m^3/sec = m^3/h \times 2,778x10^{-4}$	$m^3/sec = l/min \times 1,667x10^{-5}$

Parker Hannifin S.p.A.
via E. Fermi, 5
20060 Gessate (Milano) - Italy

Technical information

VE 146
TWO WAY - DIRECT OPERATED
NORMALLY CLOSED

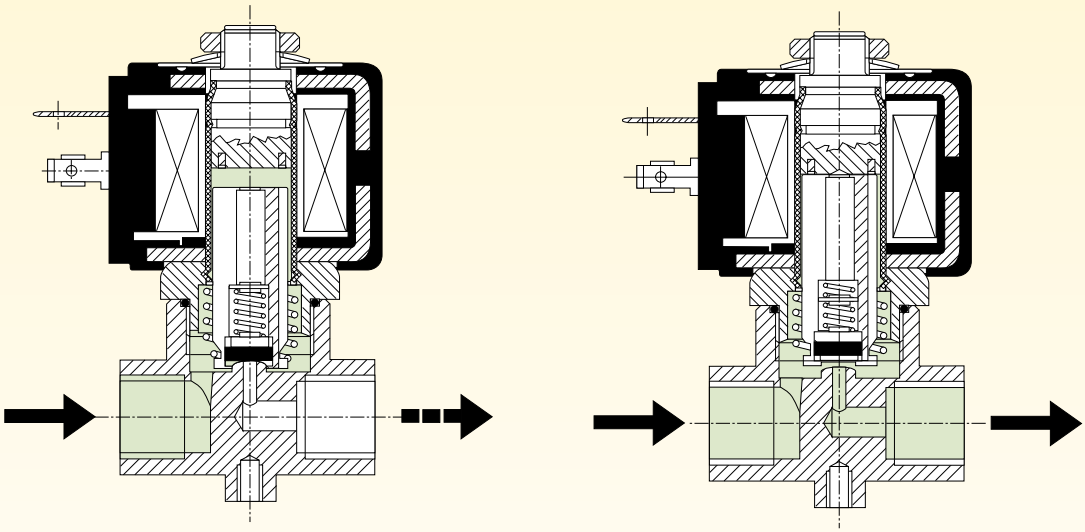

VE 120.4
TWO WAY - DIRECT OPERATED
NORMALLY OPEN

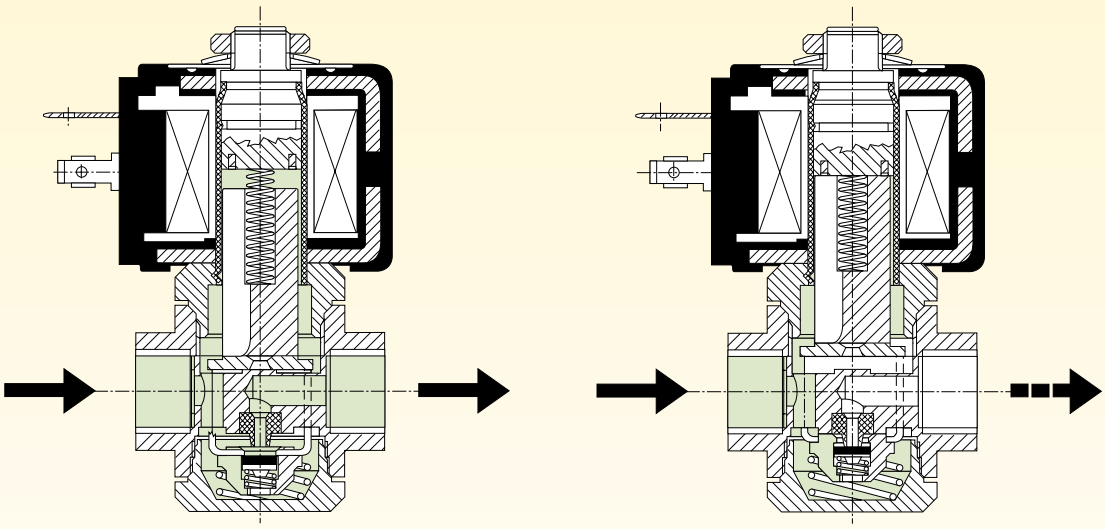

Parker Hannifin S.p.A.
via E. Fermi, 5
20060 Gessate (Milano) - Italy

VE 133
TWO WAY - PILOT OPERATED WITH DIAPHRAGM
NORMALLY CLOSED

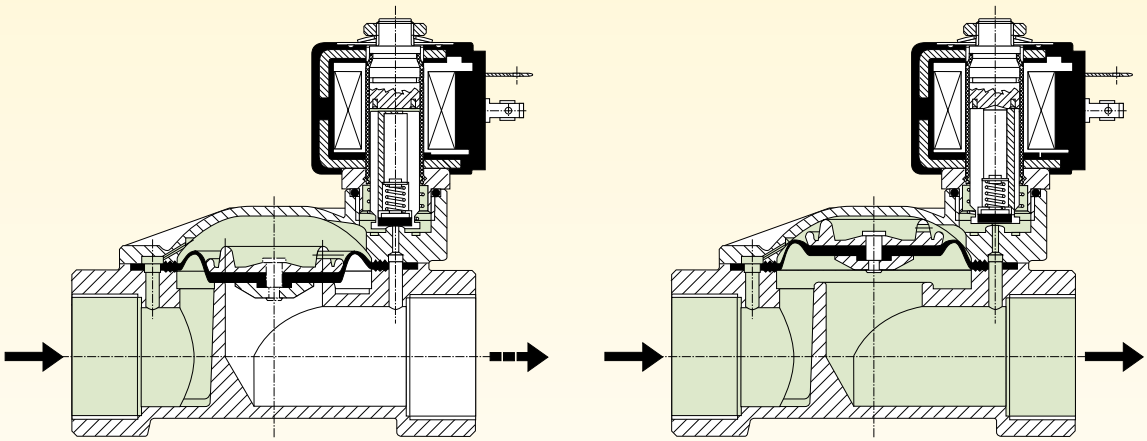

VE 143
TWO WAY - PILOT OPERATED WITH DIAPHRAGM
NORMALLY OPEN

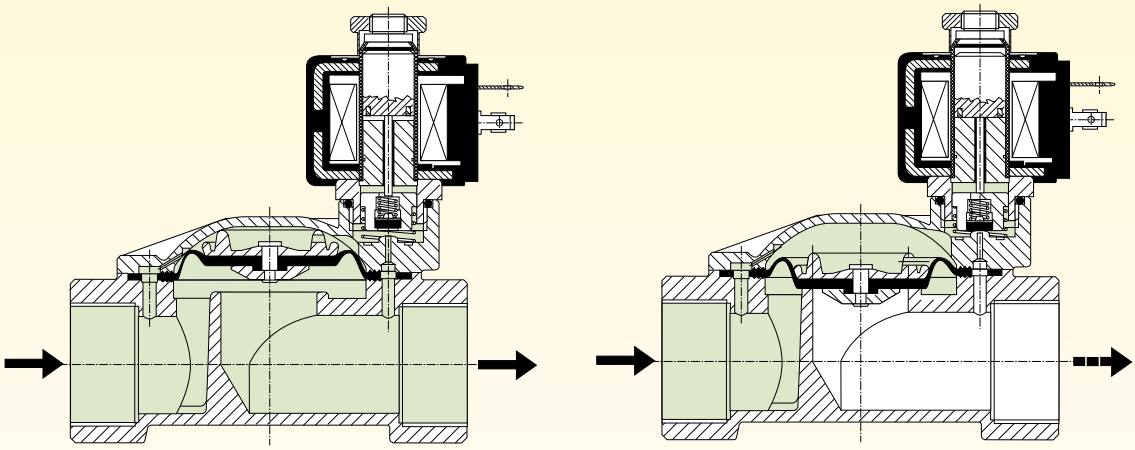

Parker Hannifin S.p.A.
via E. Fermi, 5
20060 Gessate (Milano) - Italy

Technical information

VE 123 DIAPHRAGM ASSISTED NORMALLY CLOSED

DE-ENERGIZED

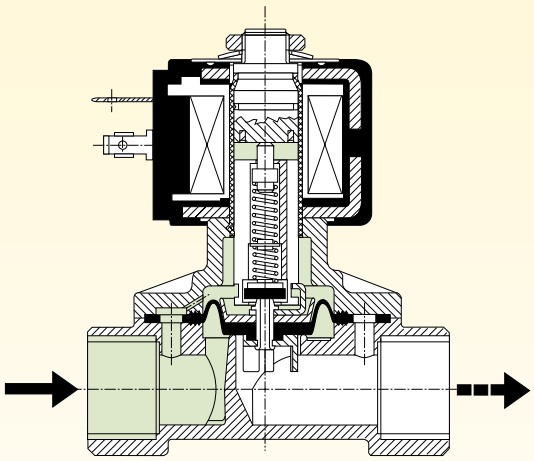

ENERGIZED

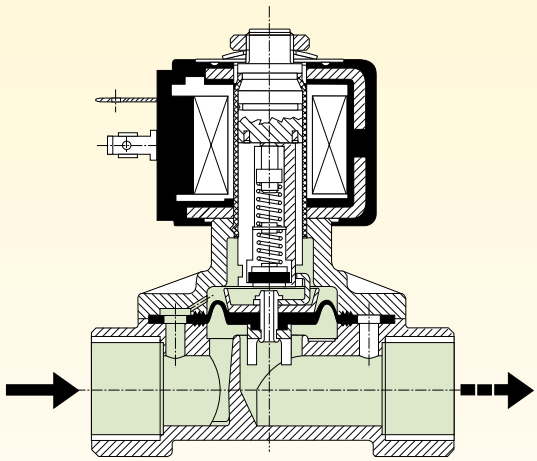

VE 141 V THREE WAY NORMALLY CLOSED

DE-ENERGIZED

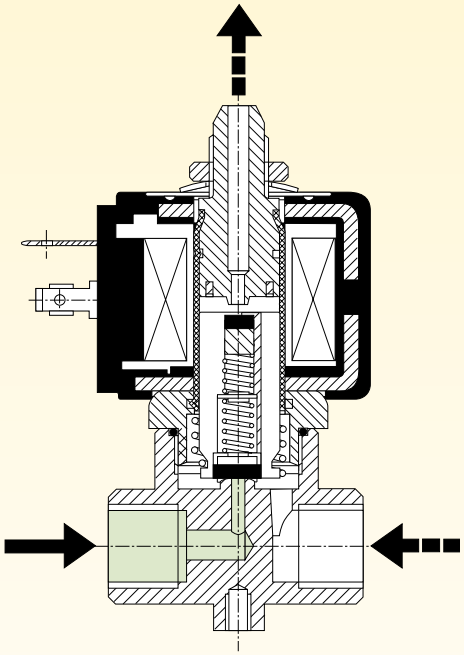

ENERGIZED

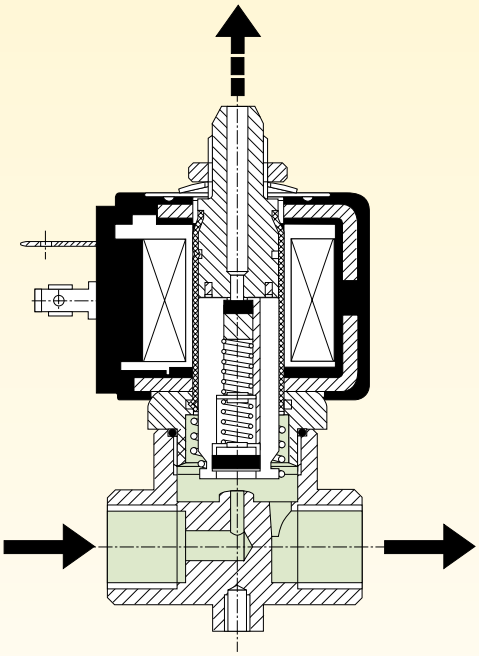

Parker Hannifin S.p.A.
via E. Fermi, 5
20060 Gessate (Milano) - Italy

VE 139 UNIVERSAL

NORMALLY OPEN function

DE-ENERGIZED ENERGIZED

NORMALLY CLOSED function

DE-ENERGIZED ENERGIZED

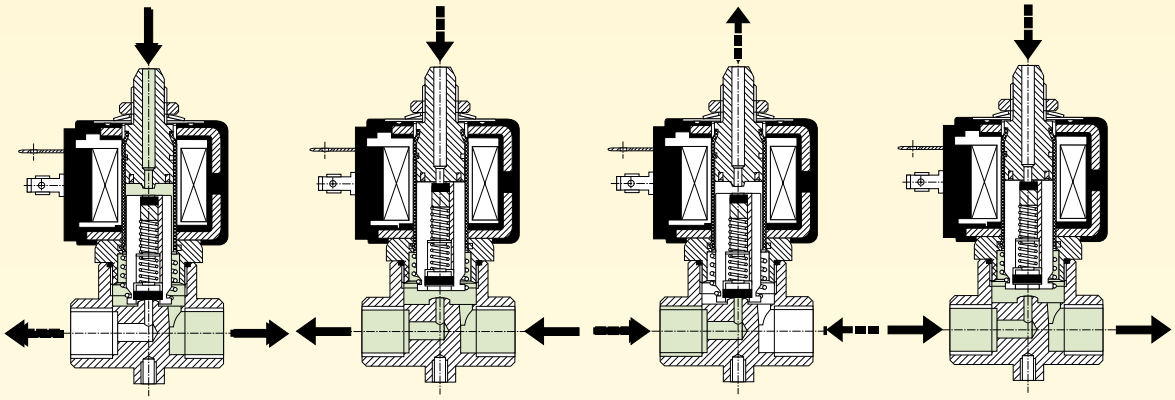

DIVERTING function

DE-ENERGIZED ENERGIZED

MIXING function

DE-ENERGIZED ENERGIZED

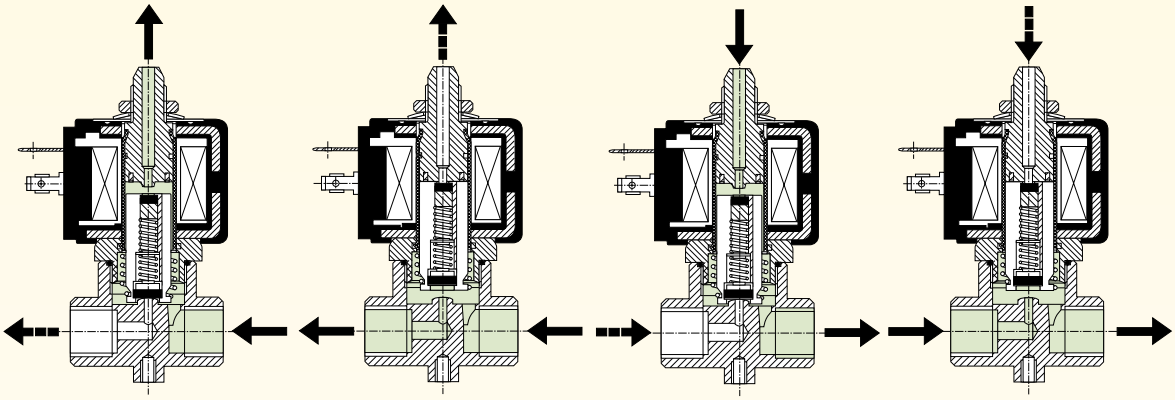

Parker Hannifin S.p.A.
via E. Fermi, 5
20060 Gessate (Milano) - Italy

Technical information

Sizing solenoid valves

The correct choice of a solenoid valve is essential as it determines the regulation and performance required for practical application on a system.
In order to decide on the exact type of solenoid valve, various parameters have to be known. However the calculation method, based on the **flow coefficient Kv**, has proved highly practical as it can be determined on the basis of:

- required flow rate
- flow resistance
- type of fluid and relative viscosity
- specific gravity and temperature.

This flow coefficient Kv is determined as laid down in the VDI/VDE 2173 standards and represents the flow of water in m^3/h with a temperature from 5 to 30°C which passes through the solenoid valve with a pressure drop of 1 bar (*see Fig. 8*).

After the existing conditions have been converted into this factor Kv, the type of valve is found by referring to the pages in the specific sections in this catalogue.
The parameters used for sizing the solenoid valve are the following:

(consult the conversion tables of the various units of measurement as defined by the ISO (International Standards Organisation) - I.S. (International System) set out in this catalogue)

Pressure symbol **P)**
unit of measurement **[bar]**
Working pressure

Pressure drop
symbol **(ΔP)**
unit of measurement **[bar]**
Pressure difference between inlet (P1) and outlet (P2) of the solenoid valve when a medium is flowing through the valve (ΔP = P1 - P2).

Flow coefficient
symbol **(Kv)**
unit of measurement **[m^3/h]**

Specific gravity of the medium
symbol **(γ)**
unit of measurement **[Kg/dm^3]**

Temperature of the medium
symbol **(t)**
unit of measurement **[°C]**

Flow rate:
• for **liquids** symbol **(Q)**
unit of measurement **[m^3/h]**
• for **gases** symbol **(Qn)**
unit of measurement **[Nm^3/h]**
• for **steam** symbol **(Qv)**
unit of measurement **[Kg/h]**

Specific volume
symbol **(Vs)**
unit of measurement **[m^3/Kg]**

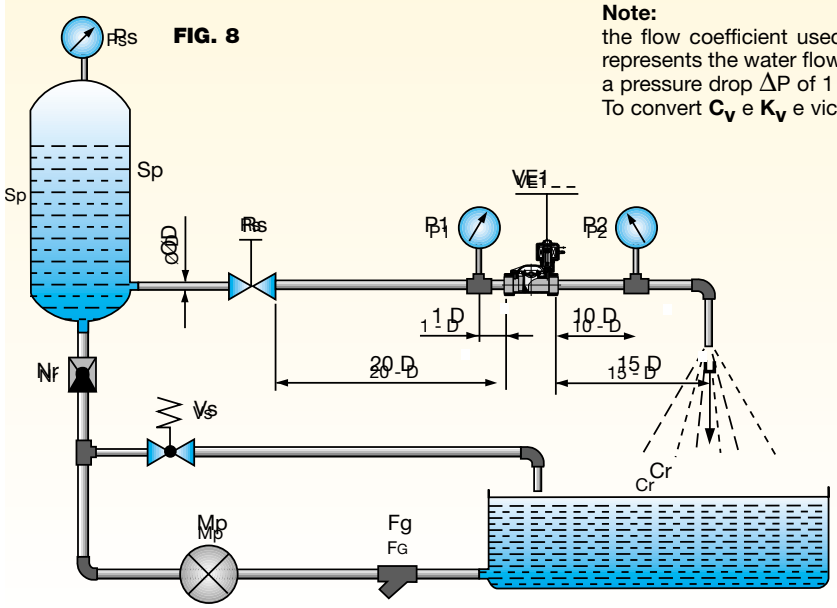

FIG. 8

Note:
the flow coefficient used in the USA is known as Cv and represents the water flow rate in US gallons per minute with a pressure drop ΔP of 1 psi.
To convert C_V e K_V e vice versa use:

1 K_V = 0.862 C_V
1 C_V = 1.16 K_V

Fg = grid filter
Mp = pump
Vs = safety valve
Nr = check valve
Sp = pressure tank
Ps = static pressure manometer

Parker Hannifin S.p.A.
via E. Fermi, 5
20060 Gessate (Milano) - Italy

Sizing solenoid valves

BY FORMULAE:

a) Solenoid valves for liquids:

Flow rate: $Q = Kv \cdot \sqrt{\frac{\Delta P}{\gamma}}$

where:
Q = m^3/h
ΔP = bar
γ = Kg/dm^3

Flow coefficient: $Kv = Q \cdot \sqrt{\frac{\gamma}{\Delta P}}$

In the case of liquids with viscosity greater than 3°E (22 cStokes) the Kv is modified according to the formula:

$$Kv_1 = Kv + C$$

$$C = \frac{\delta \cdot \sqrt{Kv}}{200 \cdot Q} + 1$$

where C is the viscosity correction factor calculated by means of the formula:

where:
δ = kinematic viscosity of the fluid expressed in centistokes
Kv = flow rate factor of the solenoid valve
Q = flow rate in m^3/h.

Pressure drop: $\Delta P = \gamma \cdot \left(\frac{Q}{Kv}\right)^2$

b) Solenoid valves for gases:

If $\Delta P \leq 1/2\ P_1$ use the following formulae:

Flow rate: $Qn = 514 \cdot Kv \sqrt{\frac{\Delta P \cdot P_2}{\gamma n \cdot (273 + t)}}$

where:
Qn = Nm^3/h
P_1 = bar
P_2 = bar
t = °C
γn = Kg/m^3

Flow coefficient: $Kv = \frac{Qn}{514} \cdot \sqrt{\frac{(273 + t) \cdot \gamma n}{\Delta P \cdot P_2}}$

Pressure drop: $\Delta P = \frac{(273 + t) \cdot \gamma n}{P_2} \cdot \frac{Qn^2}{(514 \cdot Kv)^2}$

If $\Delta P > 1/2\ P_1$ use the following formula:

$$Qn = 757 \cdot Kv \cdot \sqrt{\frac{\Delta P \cdot P_2}{(273 + t) \cdot \gamma n}}$$

c) Solenoid valves for steam:

If $\Delta P \leq 1/2\ P_1$ use the following formulae:

Flow rate: $Qv = 31,7 \cdot Kv \cdot \sqrt{\frac{\Delta P}{Vs}}$

where:
Qv = Kg/h
ΔP = bar
Vs = m^3/Kg

Flow coefficient: $Kv = \frac{Qv}{31,7} \cdot \sqrt{\frac{Vs}{\Delta P}}$

Pressure drop: $\Delta P = Vs \cdot \frac{Qv^2}{(31,7 \times Kv)^2}$

If $\Delta P > 1/2\ P_1$ use the following formula:

$$Qv = 22,4 \cdot Kv \sqrt{\frac{P_1}{Vs}}$$

Notes:

1) Should the value ΔP not be specified, use the following, which is based on experience:
   - For liquids only in the case of free discharge ΔP = 90% of the input pressure (P_1).
   - For gases never use a ΔP of more than 50% of the absolute inlet pressure, since the excessive pressure drop may cause an irregular flow rate. In most cases, ΔP can be considered as 10% of the input pressure.
2) Specific volume value (Vs) for dry saturated steam, see the table in diagram 3.

GRAPHIC SIZING:

In addition to the arithmetical method, the flow rate Q or other values can be calculated by using the following diagrams:

Diagram 1: for liquids (up to 3°E) (page 24)
Example: Water (γ_1). A calculation of the flow rate Q is required, using a solenoid valve with Kv = 0.6 at pressure P_1 = 15 bar and with a pressure drop of ΔP = 9 bar.
A line is plotted which joins point 1 on the "specific gravity" line, and point 0.6 on the "Kv" line as far as the auxiliary line. The point on this line should be plotted to point 9 on the ΔP line. The straight line plotted crosses the flow rate line "Q" at point 1.8. the value is therefere Q = 1.8 m^3/h.

Diagram 2: for gases (page 25)
Example: Air (γn = 1.3). A calculation of the flow rate Qn is required with: t = 20°C, Kv = 0.6; P_1 = 12 bar; DP = 3 bar.
Point 20 on the temperature line and point 1.3 on the specific gravity line are joined by a straight line as far as the first auxiliary line. The point found on this line should be plotted to point 0.6 on the "Kv" line and the straight line is extended until it crosses the second auxiliary line. This point should be plotted to the one found on the third auxiliary line at the intersection of the pressure curve "P_1" (12 bar) with the pressure drop line "ΔP" (3 bar). The line which joins the latter two points intersects the flow rate line "Qn" at the value of 80 Nm^3/h.

Diagram 3: for dry saturated steam - (page 26)
Example: calculate "Qv" with: P_2 = 5 bar; ΔP = 2 bar; Kv = 0.5. Using the same method as for diagram 1 the various points can be joined up using the auxiliary line and the value Qv is 36 kg/h.
Naturally, given the possibility of combining various errors graphically (readouts, joining lines, intersections on auxiliary lines etc.), the values obtained from diagrams are approximate and it is therefore advisable to compare them, each time, with the values obtained using formulae.

Parker Hannifin S.p.A.
via E. Fermi, 5
20060 Gessate (Milano) - Italy

Tel: +45 63 12 83 00 | Email: ps@hymatik.com | www.hymatik.com | Hvidkaervej 27a, DK-5250 Odense SV, Denmark

Technical information

Diagram 1 for liquids (up to 3°E)

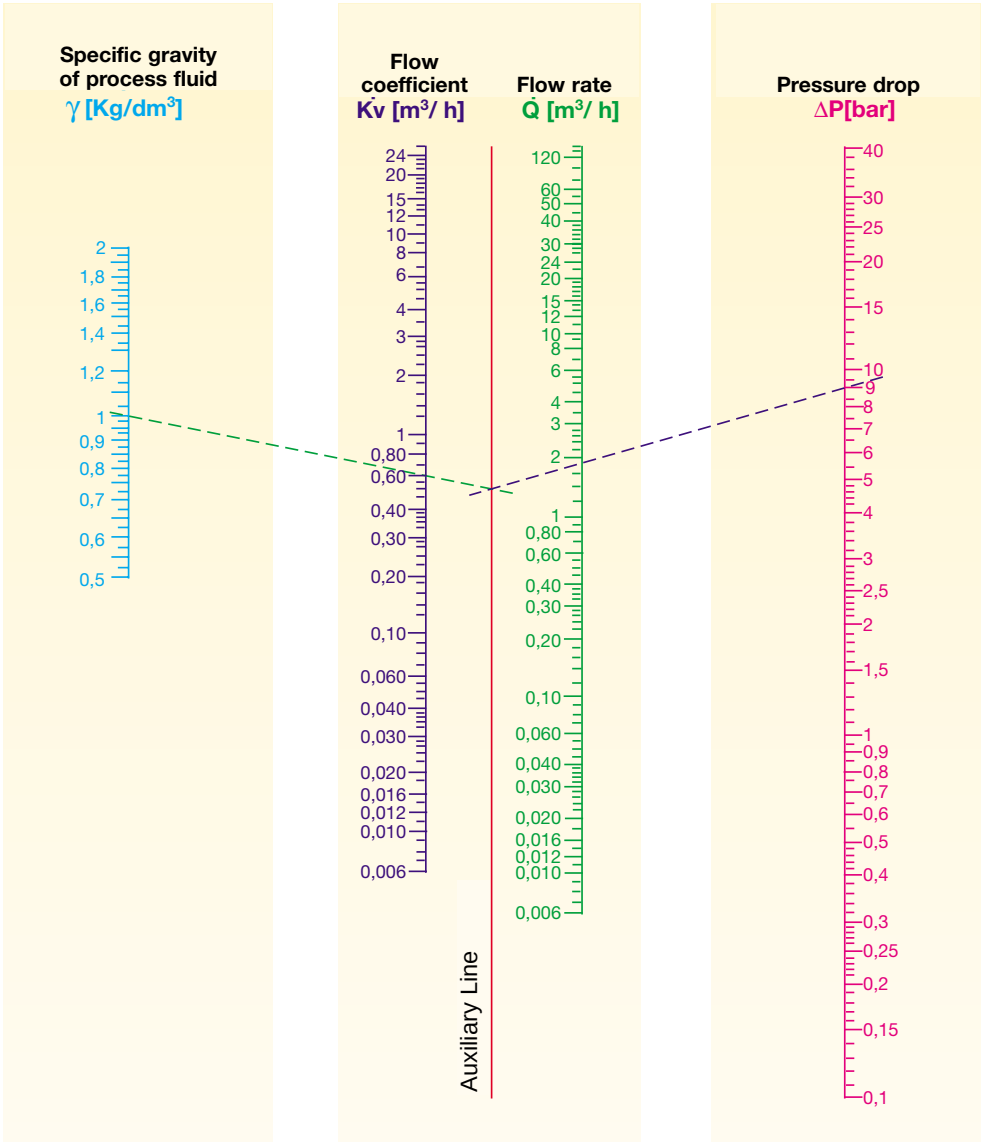

Specific gravity of thr most common fluids (γ = Kg/dm³) - (t = 15°C - P = 760mm Hg)

Acetone	0,79	Benzenol	0,90	Naphtha	0,76
Water	1,00	Beer	1,02	Pentane	0,63
Sea water	1,02	Hexane	0,66	Vegetable oil	0,92
Ethyl alcohol	0,79	Ethane	0,68	Hydraulic oil	0,92
Methyl alcohol	0,81	Diesel oil	0,70	Wine	0,95
Petrol	0,68	Milk	1,03		

Parker Hannifin S.p.A.
via E. Fermi, 5
20060 Gessate (Milano) - Italy

Diagram 2 for gases

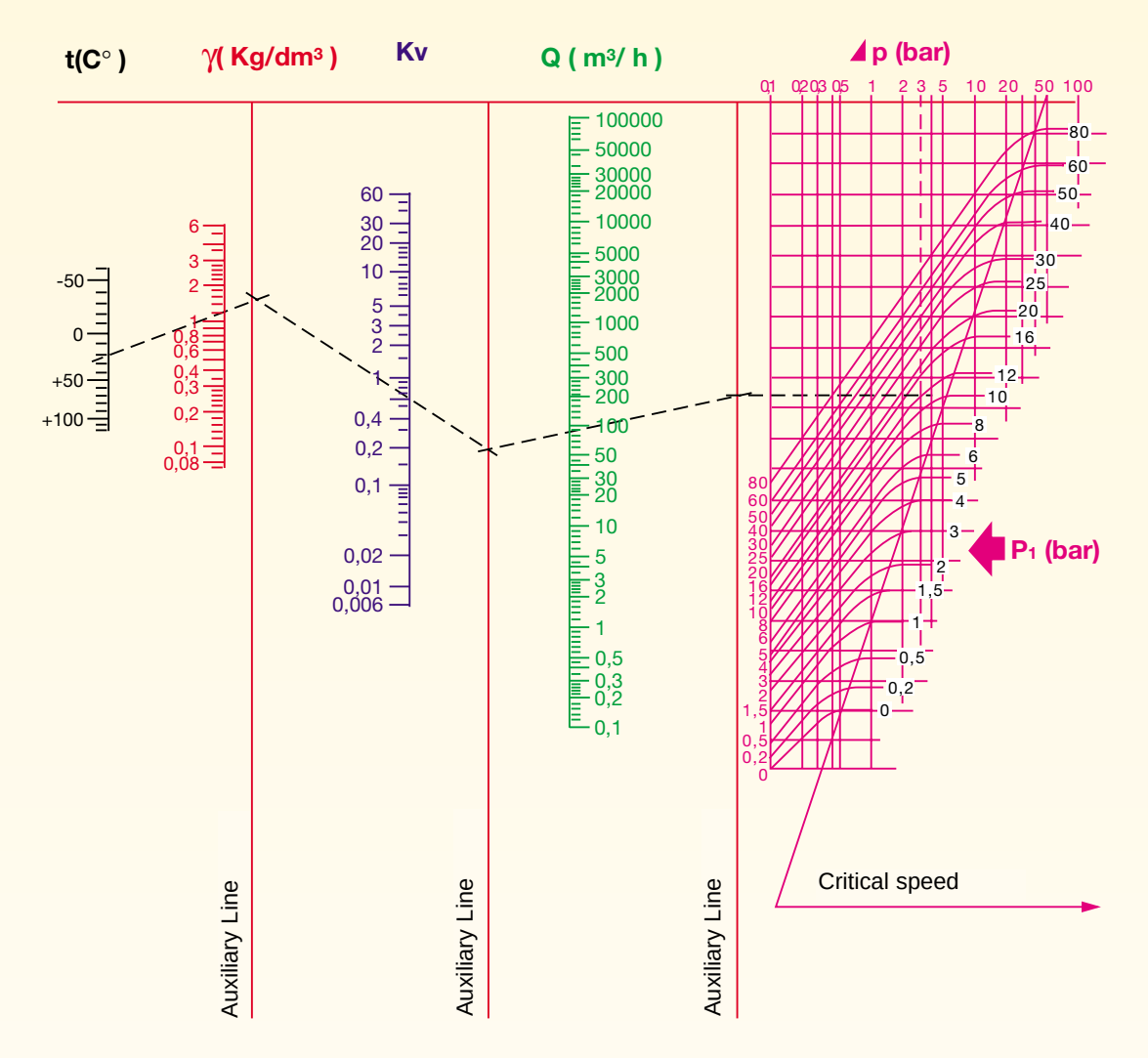

t = fluid temperature	γ N = specific gravity	Kv = flow coefficient	Qn = flow rate	Δp = pressure drop	P_1 = inlet pressure

Specific gravity of the most common gases (γ = Kg/m³) - (t = 0°C - P = 760mm Hg)

Acetylene	1,176	Helium	0,179	Natural gas	0,723
Carbon dioxide	1,965	Ethane	1,035	Methane	0,722
Air	1,293	Ethylene	1,259	Carbon monoxide	1,250
Argon	1,78	Hydrogen	0,089	Oxygen	1,429
Nitrogen	1,255			Propane	1,52
Butane	2,00			Steam	0,805

Parker Hannifin S.p.A.
via E. Fermi, 5
20060 Gessate (Milano) - Italy

Technical information

Diagram 3 for dry saturated steam

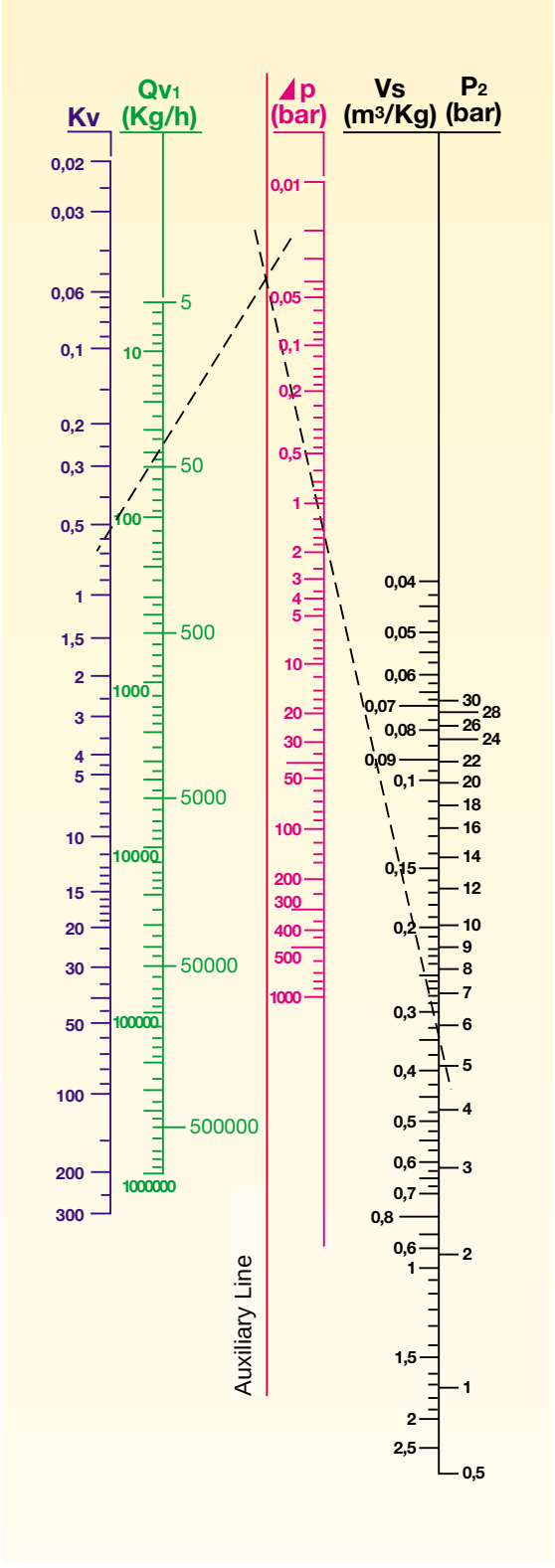

Kv = Flow coefficient

Qv = Flow rate

Δp = Pressure drop

Vs= Specific volume

P_2= Outlet pressure

Steam (dry saturated) data

P_2 bar	Temp. °C	Vs m³/Kg
0,01	6,6	131,6
0,02	17,1	68,3
0,03	23,7	46,5
0,04	28,6	35,5
0,05	32,5	28,7
0,06	35,8	24,2
0,08	41,1	18,5
0,1	45,4	15,0
0,2	59,7	7,80
0,3	68,7	5,33
0,4	75,4	4,07
0,5	80,9	3,30
0,6	85,5	2,79
0,7	89,5	2,41
0,8	93,0	2,13
0,9	96,2	1,91
1,0	99,1	1,73
1,5	110,8	1,18
2,0	119,6	0,90
2,5	126,8	0,73
3,0	132,9	0,62
3,5	138,2	0,53
4,0	142,9	0,47
4,5	147,2	0,42
5,0	151,1	0,38
5,5	154,7	0,35
6,0	158,1	0,32
6,5	161,2	0,30
7,0	164,2	0,28
7,5	167,0	0,26
8,0	169,6	0,25
8,5	172,1	0,23
9,0	174,5	0,22
9,5	176,8	0,21
10,0	179,0	0,20

P_2 bar	Temp. °C	Vs m³/Kg
11	183,2	0,181
12	187,1	0,176
13	190,7	0,155
14	194,1	0,144
15	197,4	0,135
16	200,4	0,126
17	203,4	0,119
18	206,2	0,113
19	208,8	0,107
20	211,4	0,102
22	216,2	0,093
24	220,8	0,085
26	225,0	0,079
28	229,0	0,073
30	232,8	0,068
32	236,4	0,064
34	239,8	0,060
36	243,1	0,057
38	246,2	0,053
40	249,2	0,051
45	256,2	0,045
50	262,7	0,040
55	268,7	0,036
60	274,3	0,033
65	279,6	0,030
70	284,5	0,028
80	293,6	0,024
90	301,9	0,021
100	309,5	0,018
150	340,5	0,011
200	364,2	0,006
225	374,0	0,003

Parker Hannifin S.p.A.
via E. Fermi, 5
20060 Gessate (Milano) - Italy

Production date stamp:
Letter = Year
Number = Week

C14 = 2003, 14th week

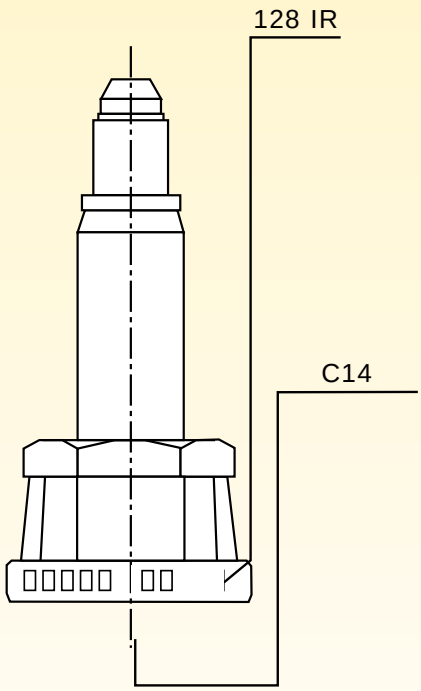

A08 = 2001, 8th week

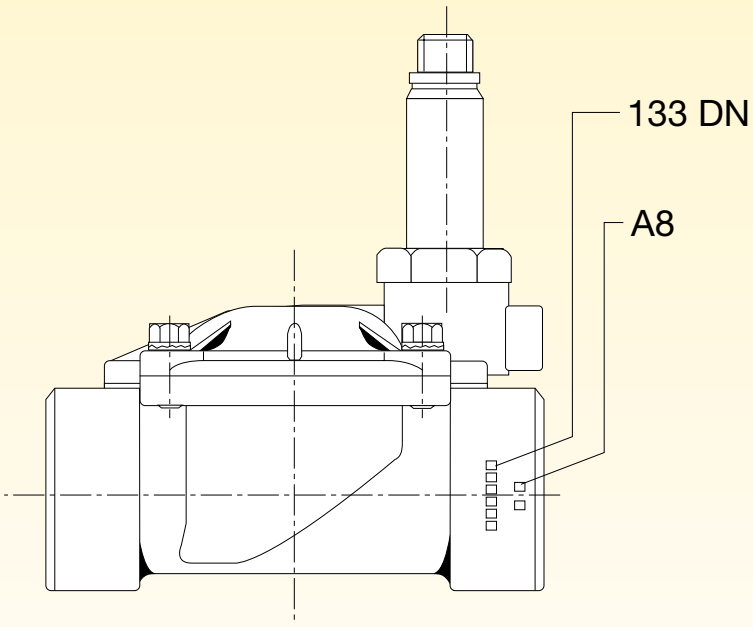

The stamp could be placed in other parts of valve body.

Parker Hannifin S.p.A.
via E. Fermi, 5
20060 Gessate (Milano) - Italy

Technical information

Fluid compatibility table

1= Good 2 = Satisfactory N.B. all the fluids are at ambient temperature unless otherwise indicated.

FLUID	MATERIAL						
	STAINLESS STEEL	BRASS	NBR	VITON	EPDM	NEOPRENE	RUBY TEFLON
Acetone	1	1	-	-	1	-	1
Air	1	1	1	1	1	1	1
Ammonia	1	-	-	-	-	1	1
Animal oil	1	1	1	1	-	-	1
Amyl acetate	1	2	-	-	-	-	1
Amyl alcohol	1	2	-	2	1	2	1
Argon	1	1	-	1	1	-	-
Beer	1	1	1	1	1	1	1
Borax	1	1	2	1	1	-	1
Boric acid	1	2	1	1	1	1	1
Butane gas	1	1	1	1	-	2	-
Butane gas	1	1	1	1	-	-	-
Butyl alcohol	1	2	1	1	-	1	1
Butylene	1	1	-	1	-	-	1
Calcium bisulphite	1	2	1	1	-	1	1
Calcium chloride	1	2	1	1	1	1	1
Carbon dioxide - CO2	1	1	1	2	-	-	1
Chlorobenzene	1	2	-	1	-	-	1
Coffee	1	1	1	1	1	1	1
Cyclohexane	1	1	1	1	-	-	1
Diesel oil	1	1	1	1	-	-	1
Distilled water	1	2	1	2	1	1	1
Dry bromine	1	1	-	2	-	-	1
Ethyl alcohol	1	2	1	-	1	1	1
Ethyl chloride	1	2	1	1	1	-	1
Ethylene glycol	1	2	1	1	1	1	1
Formic acid	1	2	-	-	-	1	1
Fuel oil	1	1	1	1	-	-	1
Fruit juice	1	2	1	1	-	1	1
Fresh water	1	1	1	2	1	1	1
Glycerol	1	2	1	1	1	1	1
Glycol	1	2	1	1	1	1	1
Glucose	1	1	1	1	1	1	1
Helium	1	1	1	1	1	1	-
Heptane	1	1	1	1	-	-	1
Hexane	1	2	1	1	-	-	1
Hydrogen	1	2	1	1	1	1	-
Isoxathian	1	1	1	1	-	-	1
Kerosine	1	1	1	1	-	-	1

1= Good 2 = Satisfactory N.B. all the fluids are at ambient temperature unless otherwise indicated.

FLUID	MATERIAL						
	STAINLESS STEEL	BRASS	NBR	VITON	EPDM	NEOPRENE	RUBY TEFLON
LPG gas	1	1	1	1	-	-	1
Methane gas	1	1	1	1	-	-	-
Methyl acetate	1	1	-	-	-	-	1
Methyl alcohol	1	2	1	-	1	1	1
Methyl chloride	1	1	-	1	-	-	1
Methyl-ethyl-ketone	1	1	-	-	1	-	1
Milk	1	2	1	1	1	1	1
Mineral oil	1	1	1	1	-	2	1
Naphtha	1	2	2	1	-	-	1
Natural gas	1	1	1	1	-	-	-
Neon	1	1	1	1	1	1	-
Nitrogen	1	1	1	1	1	1	1
Oxygen	1	1	-	1	1	1	-
Ozone	1	1	-	1	1	-	-
Paint	1	1	-	1	-	-	1
Palmitic acid	1	2	-	1	-	2	1
Pentane	1	1	1	1	-	-	1
Perchloroethylene	1	2	2	1	-	-	1
Petrol	1	1	1	1	-	-	1
Petroleum	1	2	1	1	-	-	1
Phenol	1	2	-	1	-	-	1
Potassium chloride	1	2	1	1	1	1	1
Propane gas	1	1	1	1	-	-	-
Propyl alcohol	1	1	1	1	1	1	1
Sea water	1	2	1	1	1	1	1
Silicone oil	1	1	1	1	1	1	1
Soap solution	1	1	1	1	1	-	1
Sodium bicarbonate	1	2	1	1	1	1	1
Steam at 140°C	1	1	-	2	1	-	1
Steam at 180°C	1	1	-	-	1	-	1
Tartaric acid	1	1	1	1	-	-	1
Toluene	1	1	-	2	-	-	1
Trichloroethane	1	2	-	1	-	-	1
Trichlorethylene	1	2	-	1	-	-	1
Vegetable oil	1	2	1	1	-	-	1
Vinegar	1	2	-	1	-	2	1
Wet bromine	1	2	-	2	-	-	1
Xylene	1	1	-	1	-	-	1

Parker Hannifin S.p.A.
via E. Fermi, 5
20060 Gessate (Milano) - Italy

Technical information

Coils

The Parker coils mounted on the solenoid valves are designed and tested for continuous service (100% ED) and are manufactured according to CEE-EL. -10 directives and hence meet all the electrical standards of the major European countries (VDE, CEI, BSI, UTE, SEV, NSD, SEMKO, DEMKO, NEMKO).
The insulation of the copper wire used for the windings are chosen according to the classes of insulation defined in the IEC recommendations.

E = 120°C B = 130°C
F = 155°C H = 180°C

External insulation is achieved by encapsulation in thermoplastic resin with 30% glass fiber, to make the coil airtight, mould-proof and suitable for tropical climates.
All coils are tested for satisfactory performance at the following rated voltage tolerances:
±10% for a.c.; + 10% -5% for d.c..

The ambient temperature which the coils can withstand depends on the following factors:
1) Coil wattage.

2) Coil overheating due to continuous service energisation. May be checked by resistance change test (ΔT).

3) Service of the coil (continuous service or intermittent service). Coil in continuous or intermittent use.

4) Temperature of the fluid which is shut off by the solenoid valve. Ambient conditions which may affect heat dissipation.

5) Conditions of dissipation of the environment in which the solenoid valve is installed.

All the coils, as mentioned previously, are designed for continuous service, therefore the maximum ambient temperature value (bearing in mind the influence of the fluid temperature) is 50°C (for windings in class F) and +80°C (for windings in class H).

However, if the coil is used for intermittent or short service, the maximum overheating values (ΔT) occurring with continuous energisation are not attained, therefore the ambient temperature can be increased. The specific values are determined for each case, in that the applications and possible uses of a solenoid valve are numerous.

Continuous service function:

This depends on the coil classification. With unlimited operation (always energised) at an ambient temperature of 20°C, the coils, after approximately 45 - 120 min., reach the maximum temperature rise (ΔT). (Rated voltage increased by 10%).
In this case, the ambient temperature (as already mentioned, including any dissipation externally of high fluid temperatures) must not exceed the values indicated for each model of solenoid valve.

Intermittent service function
(or with a relative energisation duration)

This is the most common condition of use, characterised by an energisation time and by a rest time. When these times are known exactly, a coil with greater power can be designed to obtain better performance with the solenoid valve or the solenoid valve can be operated in an area with higher temperatures than those indicated in the catalogue tables, subject to a check on the temperature increase (ΔT) made during these working times. By determining the relative energisation duration the work and rest times can be calculated with the following formula:

$$\text{(S.I.) ED} = \frac{\text{Energisation time}}{\text{Total cycle time (energisation + rest)}} \%$$

Normally 1h is taken as the total cycle time basis:

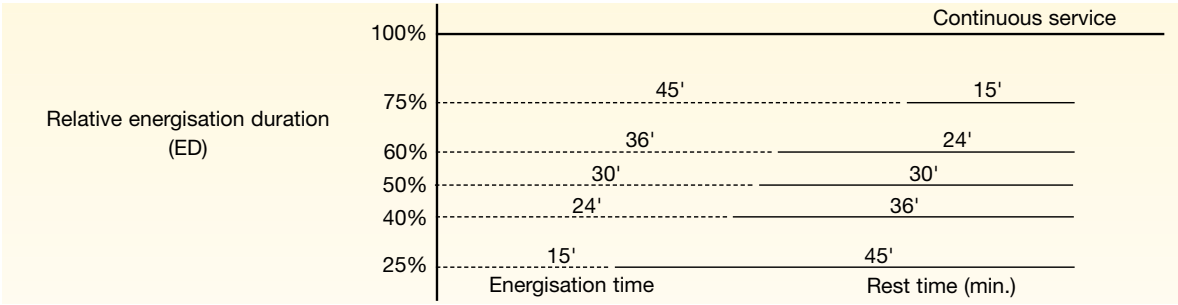

Parker Hannifin S.p.A.
via E. Fermi, 5
20060 Gessate (Milano) - Italy

Degree of protection IP - according to DIN 40050

Refers to coils fitted with connector or plug.

IP* * * Degree of enclosure protection for electrical equipment up to 1000V ~ e 1500 V =

Figure 1: protection against solids			Figure 2: protection against liquids			Figure 3: mechanical protection		
IP	Test		IP	Test		IP	Test	
0		No Protection	0		No Protection	0		No Protection
1	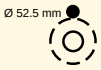	Protected against solids greater than 50 mm (e.g. accidental contact with hand).	1		Protected against vertical drips (condensation).	1	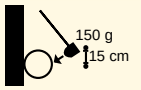	Impact energy:: 0.225 joules
2		Protected against solids greater than 12 mm (e.g. fingers).	2		Protected against drips of water up to 15° from the vertical plane.	2	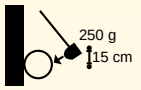	Impact energy: 0.375 joules
3		Protected against solids greater than 2.5 m (tools, wires).	3		Protected against falling water and rain up to 60° from the vertical plane.	3	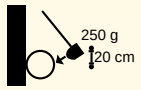	Impact energy: 0.375 joules
4		Protected against solids greater than 1 mm (fine tools, thin wires)	4		Protected against jets of water from all directions.	4	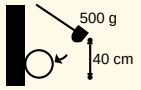	Impact energy: 2.00 joules
5		Protected against dust (no harmful deposit).	5	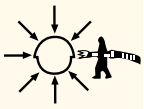	Protected against jets of water with nozzle from all directions.	7	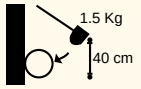	Impact energy: 6.00 joules
6		Totally protected against dust.	6	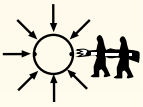	Protected against projections of water similar to sea waves.	9	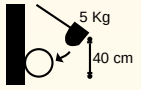	Impact energy: 2.00 joules
			7	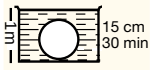	Protected against the effects of immersion.			

In the case of solenoid valve coils, normally only the first two figures are indicated, e.g. IP43-IP65

Parker Hannifin S.p.A.
via E. Fermi, 5
20060 Gessate (Milano) - Italy

Technical information

Z coil

Coil manufactured from **class H** copper wire, moulded in thermoplastic:
- (polyester) with 30% glass fiber **(type ZB);**
- (polyphenylene) with 40% glass fiber **(type ZH).**

Features:

Protection	DIN 40050 = IP 65 with connector
Connector	DIN 43650 A - PG 9 or PG 11
Frequency	50/60 Hz

Types available:

❊ **IMQ, VDE, UL** approved for standard voltages
See table page 33.

1) Class F (155°C)
- •ZB09 = 16 VA - 9 W a.c. Service (25 VA - Inrush)
- •ZB12 = 12 W d.c.
- •ZB14 = 25 VA - 14 W a.c. Service (33 VA - Inrush)
- •ZB16 = 16 W d.c.

2) Class H (180°C)
- •ZH14 = 25 VA - 14 W a.c. - Service (33 VA - Inrush)
- •ZH16 = 16 W d.c.
- •ZH09 = 16 VA - 9 W a.c. - Service (25 VA - Inrush)
- •ZH12 = 12 W d.c.



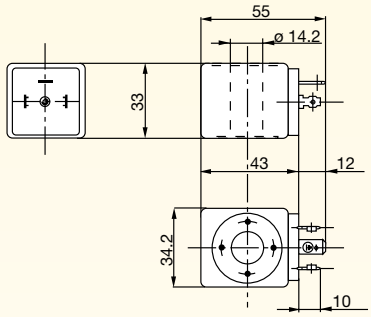

Y coil

Coil manufactured from **class H** copper wire, moulded in thermoplastic:
- (polyester) with 30% glass fiber;

Features

Protection	DIN 40050 = IP 67
Electrical connection	two 1000 mm cables
Frequency	50/60 Hz

Types available:

❊ **IMQ, VDE, UL** approved for standard voltages
See table page 33.

1) Class F (155°C)
- •YB09 = 15 VA - 9 W a.c. Service (24 VA - Inrush)
- •YB12 = 12 W d.c.
- •YB14 = 24 VA - 14 W a.c. Service (32 VA - Inrush)
- •YB16 = 16 W d.c.

2) Class E (120°C)
- •YE09 = 15 VA - 9 W a.c.

Note: recommended for applications where humidity is particularly severe and where ice formation or defrosting may occur.

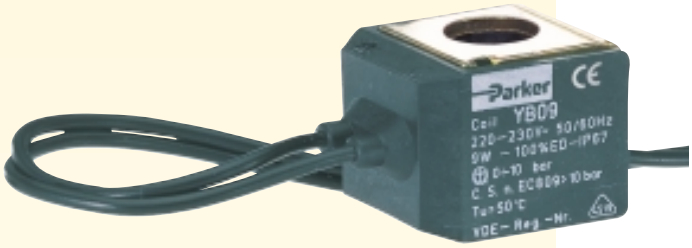

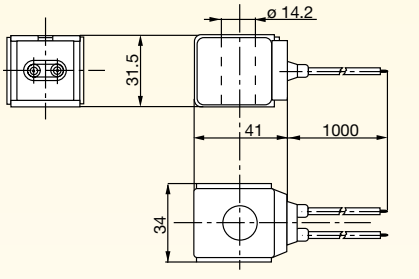

Parker Hannifin S.p.A.
via E. Fermi, 5
20060 Gessate (Milano) - Italy

J coil

Coil manufactured from **class H** copper wire, moulded in thermoplastic:
- (polyester) with 30% glass fiber;

Features:

Protection	DIN 40050 = IP 65 with connector
Connector	DIN 43650 A - PG 9 or PG 11
Frequency	50/60 Hz
Insulation class	F (155°C)

Types available:

❊ **IMQ** approved for standard voltages
See table page 33.

1) Class F (155°C)
- •JB14 = 30 VA - 14 W a.c. Service (55 VA - Inrush)
- •JB16 = 16 W d.c.

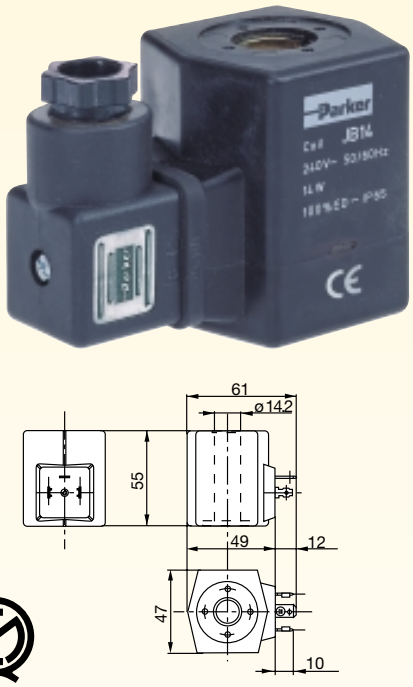

K coil

Coil manufactured from **class H** copper wire moulded in thermoplastic:
- (polyester) with 30% glass fiber (KP, KT);
- (polyphenylene) with 40% glass fiber (KH).

Features:

Protection	DIN 40050 = IP 65 with connector
Connector	DIN 43650 A - PG 9 or PG 11
Frequency	50 or 60 Hz

Types available:

❊ **IMQ** approved for standard voltages
See table page 33.

1) Class F (155°C)
- •KT09 = 12 VA - 9 W a.c. Service (20 VA - Inrush)
- •KP07 = 13 VA - 7 W a.c. Service (22 VA - Inrush)
- •KP10 = 10 W d.c.

2) Class H (180°C)
- •KH09 = C.A.12 VA - 9 W - Service (20 VA - Inrush);

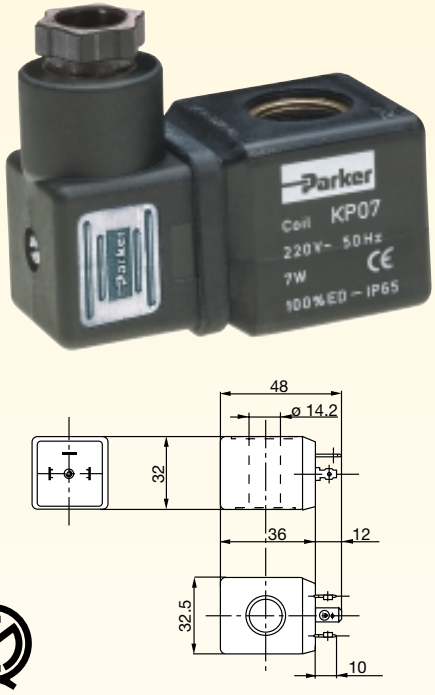

Parker Hannifin S.p.A.
via E. Fermi, 5
20060 Gessate (Milano) - Italy

Technical information

X coil

Coil manufactured from **class H** copper wire, moulded in thermoplastic:
- (polyammide) with 30% glass fiber;

Features::

Protection	DIN 40050 = IP 54 with plug
Connector	Plug with special three-core cable
Frequency	50 or 60 Hz
Insulation class	F (155°C)

Types available:

1) Class F (155°C)
- •XT09 = 12 VA - 9 W a.c. Service (20 VA - Inrush)
- •XP07 = 13 VA - 7 W a.c. Service (22 VA - Inrush)

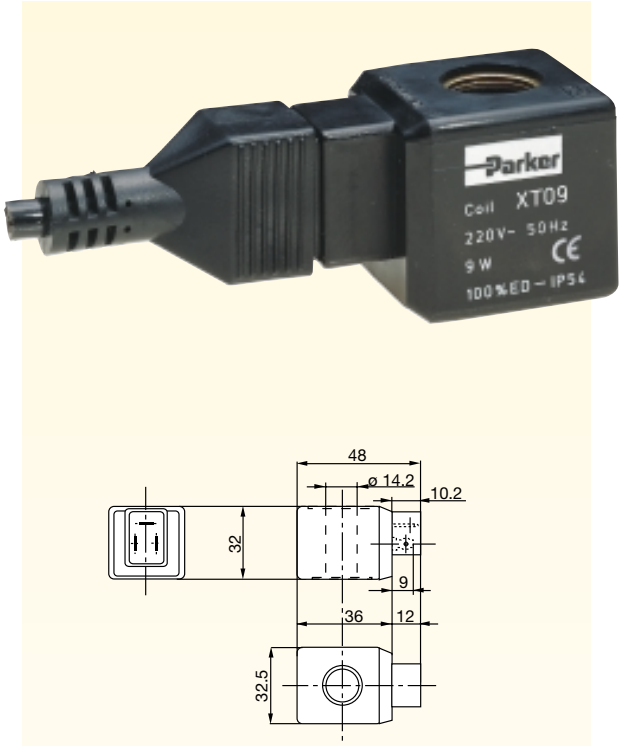

W coil

Coil manufactured from **class H** copper wire, moulded in thermoplastic:
- (polyester) with 30% glass fiber;

Features:

Protection	DIN 40050 = IP 65 with connector
Connector	DIN 43650 B - PG 9
Frequency	50/60 Hz
Insulation class	F (155°C)

Types available:

❊ **IMQ** approved for standard voltages
See table page 33.

1) Class F (155°C)
- •WB4.5 = 7.5 VA - 4.5 W a.c. Service (11 VA - Inrush)
- •WB5.0 = 5 W d.c.
- •WB8.0 = 11 VA - 8 W a.c. Service (17 VA - Inrush).

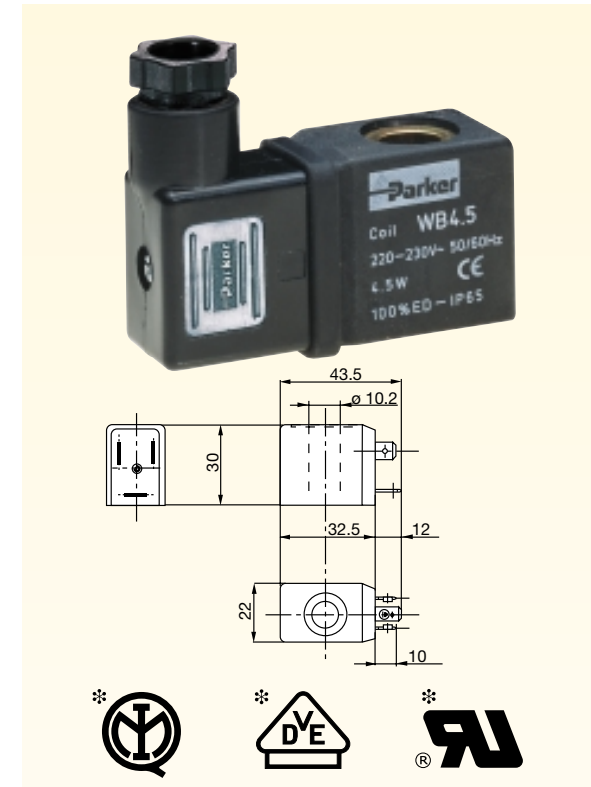

Parker Hannifin S.p.A.
via E. Fermi, 5
20060 Gessate (Milano) - Italy

Coil Table

COIL	Voltage range	Approvals			Mark CE
		IMQ	VDE*	UR** (UL recognized components)	
ZB09	24V 50-60Hz				•
ZB09	24V 60Hz			•	•
ZB09	110-120V 50-60Hz	•			•
ZB09	110-120V 60Hz			•	•
ZB09	220-230V 50-60Hz	•	•		•
ZB09	208-240V 60Hz			•	•
ZB09	240V 50-60Hz	•	•		•
ZH09	24V 50-60Hz	•			•
ZB12	12 V DC				•
ZB12	24 V DC				•
ZH12	12 V DC	•			•
ZH12	24 V DC	•			•
ZB14	24V 50-60Hz				•
ZB14	110-120V 50-60Hz	•			•
ZB14	220-230V 50-60Hz	•	•		•
ZH14	24V 50-60Hz	•			•
ZH14	110-120V 50-60Hz				•
ZH14	220-230V 50-60Hz				•
ZH16	12 V DC	•			•
ZH16	24 V DC	•			•
YB09	24V 50-60Hz				•
YB09	24V 60Hz			•	•
YB09	110-120V 50-60Hz				•
YB09	110-120V 60Hz			•	•
YB09	220-230V 50-60Hz	•	•		•
YB09	208-240V 60Hz			•	•
YB09	240V 50-60Hz				•
YB14	24V 50-60Hz				•
YB14	115V 50-60Hz				•
YB14	220-230V 50-60Hz	•	•		•
YH14	220-230 50-60Hz				•
JB14	220-230/50-60Hz	•			•
WB4.5	24V 50-60Hz				•
WB4.5	110-120V 50-60Hz	•	•		•
WB4.5	220-230V 50-60Hz	•	•		•
KH09	115V 50Hz	•			•
KH09	230V 50Hz	•			•
KT09	115V 50Hz	•			•
KT09	220-230V 50Hz	•			•
KP07	220-230V 50Hz	•			•

(*) Approval of the coil.
(**) Approval of complete valve, to know the approved models ask to Parker.

Parker Hannifin S.p.A.
via E. Fermi, 5
20060 Gessate (Milano) - Italy

Technical information

Coil Table

VALVE SERIES	JB14 JB16	KP07	KT05 KT06	KT09 KT10	WB4.5 WB5.0	XT09	XP07	YB09 YB12	YB14 YB16	YE09	ZB09 ZB12 ZH09 ZH12	ZB14 ZB16	ZH14 ZH16	KH09
120.4									•			•	•	
123	•							•			•	•	•	
126								•			•	•		
128								•			•		•	
131				•		•								•
131.4				•										•
131.4...G			•	•										•
133								•		•	•		•	
133...H								•			•		•	
133 CMV								•			•		•	
135													•	
136									•			•	•	
139								•			•		•	
140							•	•			•		•	
140.2								•			•		•	
141								•			•		•	
143									•			•	•	
146								•	•		•	•	•	
151								•			•		•	
153		•(1)							•			•	•	
156.2								•			•		•	
158								•			•		•	
161.4				•										•
168.1								•			•		•	
169.1									•			•	•	
173					•									
N74					•									
N79					•									

Notes: ● **Standard** **(1)** For spare coil order ZB09-ZB12

Parker Hannifin S.p.A.
via E. Fermi, 5
20060 Gessate (Milano) - Italy

Three pin Connector DIN 43650 A (Z, J, K)

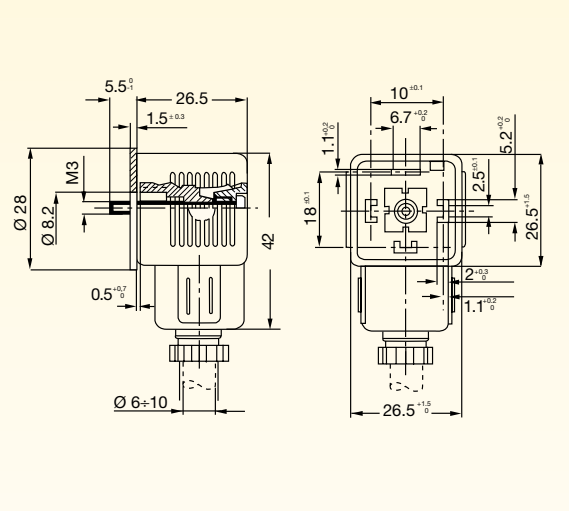

Three pin Connector DIN 43650 B (WB Coil)

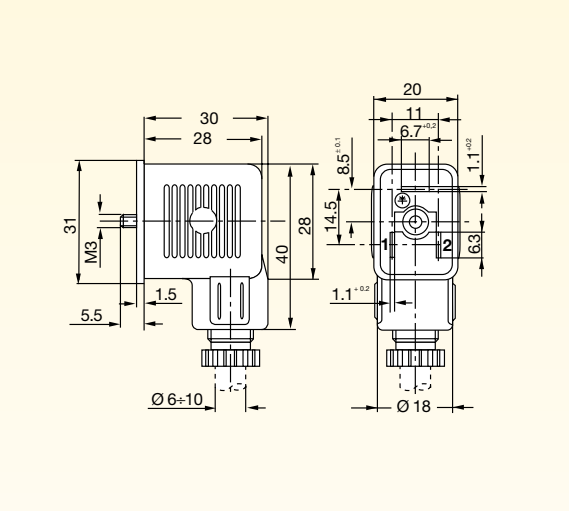

SPECIFICATION: CONNECTOR DIN 43650		
Nominal voltage	250 -/ 300V=	
Max switch rating	16 A	
Contact resistance	≤4 m Ohm	
Contact width (max)	1,5 mm²	
Protection class	IP65 - DIN 40050	
Insulation class	Gruppo C - VDE 0110	
Gasket material	NBR (-40°C + 90°C)	
Cable diameter	6 ÷ 8	8 ÷ 10
Gland nut	Pg 9	Pg 11

Connector with three core cable (Z, J, K Coil)

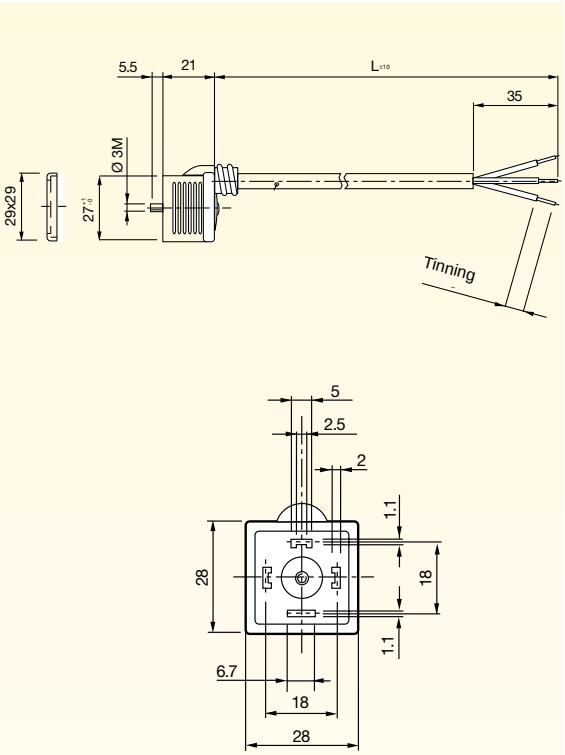

L ±10	Part. No.
500 mm	169110
1000 mm	169150

Special plug with three core cable (X Coil)

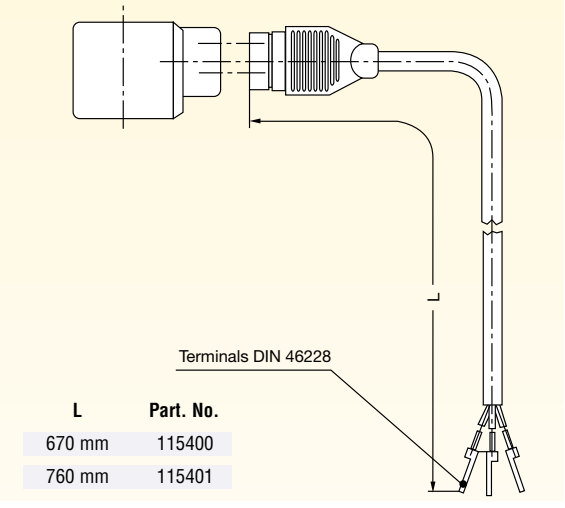

L	Part. No.
670 mm	115400
760 mm	115401

Parker Hannifin S.p.A.
via E. Fermi, 5
20060 Gessate (Milano) - Italy

Technical Information

Parker Hannifin S.p.A.
via E. Fermi, 5
20060 Gessate (Milano) - Italy

Solenoid Valves for Automation



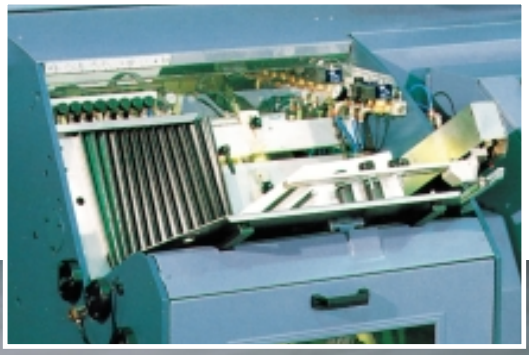



Parker Hannifin S.p.A.
via E. Fermi, 5
20060 Gessate (Milano) - Italy

Solenoid Valves for Automation

Contents

			pages
Series	**123**	**NC**	40-41
Series	**131.4**	**NC**	42-43
Series	**133**	**NC**	44-45
Series	**133 CMV**	**NC**	46-47
Series	**136**	**NO**	48-49
Series	**139**	**UNIVERSAL**	50-51
Series	**141**	**NC**	52-53
Series	**143**	**NO**	54-55
Series	**146**	**NC**	56-57
Series	**151**	**NO**	58-59
Series	**168.1**	**NC**	60-61
Series	**169.1**	**NO**	62-63
Series	**173**	**NC**	64-65
Series	**N74**	**NC**	66-67
Series	**N79**	**NC**	68-69

NO = normally open

NC = normally closed

Parker Hannifin S.p.A.
via E. Fermi, 5
20060 Gessate (Milano) - Italy

Tel: +45 63 12 83 00 | Email: ps@hymatik.com | www.hymatik.com | Hvidkaervej 27a, DK-5250 Odense SV, Denmark

FITTINGS / TYPE	G = 1/8" Rp*= 1/8"		G = 1/4" Rp*= 1/4"		G=3/8"		G=1/2"		G=3/4"		G=1 "		G=1 1/4"		G=1 1/2"		G=2"		G=2 1/2"		G=3"	
	a.c. [bar]	d.c. [bar]	a.c. [bar]	d.c. [bar]	a.c. [bar]	d.c. [bar]	a.c. [bar]	d.c. [bar]	a.c. [bar]	d.c. [bar]	a.c. [bar]	d.c. [bar]	a.c. [bar]	d.c. [bar]	a.c. [bar]	d.c. [bar]	a.c. [bar]	d.c. [bar]	a.c. [bar]	d.c. [bar]	a.c. [bar]	d.c. [bar]
Series **123**					5	1	5	1	3	1	3	1										
Series **131.4**	8*	6*	2÷8*	1÷6*																		
Series **133**					20	20	20	20	20	20	20	20	10	10	10	10	10	10				
Series **133 CMV**									10	10	10	10	5	5	5	5	5	5	10	10	10	10
Series **136**			5,5	5,5																		
Series **139**	7÷10	7÷10	1÷7	1÷7																		
Series **141**	10÷15	10÷15	7÷10	7÷10																		
Series **143**					20	20	20	20	20	20	20	20	10	10	10	10	10	10	10	10	10	10
Series **146**	10÷15	8÷12	8÷15	1÷12																		
Series **151**			12÷22	12÷22																		
Series **168.1**					16	16	16	16	16	16	16	16										
Series **169.1**					16	16	16	16	16	16	16	16										
Series **173**					15	15	15	15														
Series **N74**	10÷20	6÷15	10	6																		
Series **N79**	7÷10	7÷10																				

The numbers in [bar] in the table indicate the **M.O.P.D. values (maximum operating pressure differential).**
The columns refer to the type of fittings and power supply; the rows refer to the valve series.
Items with asterisk (*) refer to R_p type fittings.

Parker Hannifin S.p.A.
via E. Fermi, 5
20060 Gessate (Milano) - Italy

Tel: +45 63 12 83 00 | Email: ps@hymatik.com | www.hymatik.com | Hvidkaervej 27a, DK-5250 Odense SV, Denmark

Solenoid Valves for Automation

2/2 way - Normally Closed - Diaphragm assisted lift

Fittings: G = 3/8" - 1"

Series **123**

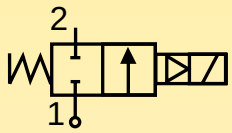

N.C.
Normally closed
Coil energised - open
Coil de-energised - closed

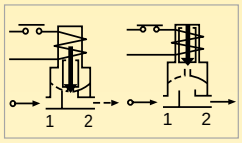

General description:

PARKER series **123** solenoid valves are diaphragm assisted lift and do not require a minimum differential pressure to operate. They are used for general applications with media such as: **water, air, light oils (2°E) and inert gases,** provided they are compatible with the construction materials used.
Series **123** valves are **normally closed**.

Temperatures:

The working temperature for media is:
maximum **+140°C**
minimum **-10°C**
The maximum ambient temperature is:
• with class **"F"** coils **+50°C**
• with class **"H"** coils **+80°C**

Application:

Series **123** solenoid valves are ideal for automatic control of media for a wide range of uses which require zero or very low differential pressures.
Some examples of applications are:
•thermohydraulic systems;
•industrial dishwashers;
•hydrocleaners;
•instruments;
•metal smelting plants;
•polyurethane systems;
•closed circuits;
•environmentally-friendly systems;
•suction pad manipulators.
In vacuum applications series **123** valves can be used in a range **from 10^{-3} to 10^{+3} torr**.
They may be used with gases with pressures over **2,000 mm of water column.**



Coils:

For series **123** valves class **"F"** coils **(155°C)** are available, encapsulated in thermoplastic containing 30% glass fiber (types: ZB, YB, JB).
For models **I** and **A,** class **"H"** coils **(180°C)** are also available, encapsulated in thermoplastic containing 40% glass fiber (type: ZH).
All the coils are for continuous service, 100% E.D.
The rated voltage tolerance is:
± 10% for A.C. power supply and
+ 10% -5% for D.C.
The "Z", "Y", "J" coils can be used on a.c. with frequency 50/60 Hz (dualfrequency).
The "Z" and "J" coils have Faston terminals for **DIN 43650A** connectors with protection to **IP65.**
The "Y" coil has terminals with 2 x 1,000 mm cables with protection to **IP67.**

Installation:

The valves can be mounted in any position without jeopardising their operation. It is however advisable to install them with the coil in a vertical position above the body.

Approvals:

• For the coils:

ZB 09 115V/50-60Hz, 220-230V/50-60Hz, 240V/50-60Hz
ZH 09 24V/50-60Hz
ZH 12 12V DC, 24V DC
YB 09 220-230V/50-60Hz
JB 14 220-230V/50-60Hz

• For the coils:

ZB 09 220-230V/50-60Hz, 240V/50-60Hz
YB 09 220-230V/50-60Hz

• UL Recognized Comp. coils mark

ZB 09 coil, voltages: 24V/60Hz, 110-120V/60Hz, 208-240V/60Hz
YB 09 24V/60Hz, 110-120V/60Hz, 208-240V/60Hz

Parker Hannifin S.p.A.
via E. Fermi, 5
20060 Gessate (Milano) - Italy

Tel: +45 63 12 83 00 | Email: ps@hymatik.com | www.hymatik.com | Hvidkaervej 27a, DK-5250 Odense SV, Denmark

for: water - air - light oils (2°E) - inert gases

MATERIALS

• Valve body:	CW617N UNI EN 12165:98 brass stamping
• Seals:	Viton
• Enclosing tube:	AISI 304 stainless steel
• Plunger:	AISI 430F stainless steel
• Spring:	AISI 302 stainless steel
• Shading ring:	Copper

ELECTRICAL FEATURES

Coil type [ ]		Power [W]		Insulat. class
A.C.(~)	D.C.(=)	A.C.(~)	D.C.(=)	
ZB 09	ZB 12	9	12	F
YB 09	YB 12	9	12	F
ZH 09	ZH 12	9	12	H
ZH 14	ZH 16	14	16	H
JB 14	JB 16	14	16	F

SPECIFICATION

Fittings Ø G	Valve type	Nominal orifice Ø	Flow coefficient Kv	Minimum pressure	Max differential pressure (M.O.P.D.)		Coil type	Weight	Notes
["]	[ ]	[mm]	[m³/h]	[bar]	in A.C.(~) [bar]	in D.C.(=) [bar]	[ ]	[Kg]	[ ]
3/8	123 I	13	2,40	0	5	1	Z - Y	0,510	1
1/2	123 A	13	2,40	0	5	1	Z - Y	0,540	1
3/4	123 C	20	6,00	0	3	1	J	1,230	1
1	123 D	25	7,00	0	3	1	J	1,300	1

Note: 1) NP (Nominal pressure): 16 bar.

DIMENSIONS

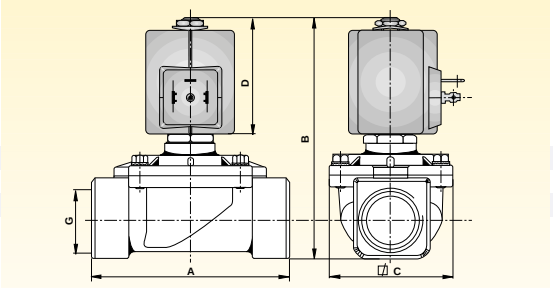

Fittings Ø G	A	B	C	D
["]	[mm]	[mm]	[mm]	[mm]
3/8	69	83	40	37,5
1/2	72	85	40	37,5
3/4	100	120	65	59
1	104	125	65	59

ORDER CODE

PM	123		V			[V]	[Hz] / d.c.

VALVE BODY

SERIES

FITTINGS

I	3/8"
A	1/2"
C	3/4"
D	1"

SEAL

V	Viton

Coil type	24 V 50/60 Hz	115V 50/60 Hz	220-230 V 50/60 Hz	240 V 50/60 Hz	12 V d.c.	24 V d.c.
ZB 09	●	●	●	●		
ZH 09	●					
ZB 12					●	●
ZH 12					●	●
YB 09	●	●	●			
YB 12					●	●
ZH 14	●	●	●			
ZH 16					●	●
JB 14	●	●	●			
JB 16					●	●

Coil type	24 V / 60 Hz	110-120 V / 60 Hz	208-240 V / 60 Hz
ZB 09 UL	●	●	●
YB 09 UL	●	●	●

Note: Valve supplied with body (PM) and coil separate. Connector to be ordered separately.

Parker Hannifin S.p.A.
via E. Fermi, 5
20060 Gessate (Milano) - Italy

Solenoid Valves for Automation

2/2 way - Normally Closed - Direct operated

Fittings: Rp = 1/8" - 1/4"

Series **131.4**

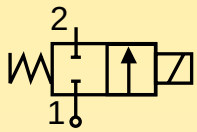

N.C.
Normally closed

Coil energised - open
Coil de-energised - closed

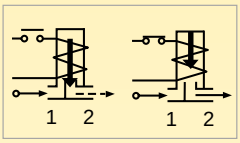

General description:

PARKER series **131.4** solenoid valves are direct operated.
They are used for general applications with media such as **inert gases and light oils (2°E).**
Series **131.4** valves are **normally closed**.

Temperatures:

The working temperature for media is:

maximum	**+140°C**
minimum	**-10°C**

The maximum ambient temperature is:
- with class **"F" : +50°C;**
- with class **"H" : +80°C.**

Application:

Series **131.4** solenoid valves are used for the automatic control of media where low flow rates are required.
Some examples of applications are:
- welding machines with controlled atmosphere;
- diesel oil burners;
- gas analysers;
- fumes analysers;
- distribution of light oils;
- measurement and control instruments;
- lubrication systems.

Coils:

For series **131.4** valves class **"F"** coils **(155°C)**, encapsulated in thermoplastic containing 30% glass fiber (type KT), are available.
All the coils are for continuous service, 100% E.D.
The rated voltage tolerance is:
±10% for A.C. power supply and
+10% -5% for D.C.
The "K" coil can be used on a.c. with frequency 50 Hz or 60 Hz (single frequency) and has Faston terminals for **DIN 43650A** connector with protection to **IP65.**

Installation:

The valves can be mounted in any position without jeopardising their operation. It is however advisable to install them with the coil in a vertical position above the body.
The valve body has 2 mounting holes diam. M4 x 7 with centre distance 13 x 13.

Approvals:

- For the coils:

KH 09	115V/50Hz
	230V/50Hz
KT 09	115V/50Hz
	220-230V/50Hz



Parker Hannifin S.p.A.
via E. Fermi, 5
20060 Gessate (Milano) - Italy

Tel: +45 63 12 83 00 | Email: ps@hymatik.com | www.hymatik.com | Hvidkaervej 27a, DK-5250 Odense SV, Denmark

for: inert gases - light oils (2°E)

MATERIALS

• Valve body:	CW617N UNI EN 12165:98 brass stamping
• Seals:	Viton
• Enclosing tube:	CW614N UNI EN 12164:98
• Plunger:	9 SMnPb23 UNI 5105 steel with nickel
• Spring:	AISI 302 stainless steel
• Shading ring:	Copper

ELECTRICAL FEATURES

Coil type [ ]		Power [W]		Insulat. class
A.C.(~)	D.C.(=)	A.C.(~)	D.C.(=)	
KT 09	KT 10	9	10	F
KH 09	-	9	-	H

SPECIFICATION

Fittings Ø Rp	Valve type	Nominal orifice Ø	Flow coefficient Kv	Minimum pressure	Max differential pressure (M.O.P.D.)		Coil type	Weight	Notes
["]	[ ]	[mm]	[m³/h]	[bar]	in A.C.(~) [bar]	in D.C.(=) [bar]	[ ]	[Kg]	[ ]
1/8	131.4 BV	2,8	0,174	0	8	6	K	0,200	1
1/4	131.4 FV	2,8	0,174	0	8	6	K	0,220	1
1/4	131.4 GV	4,0	0,318	0	2	1	K	1,220	1

Note: 1) NP (nominal pressure): 10 bar

DIMENSIONS

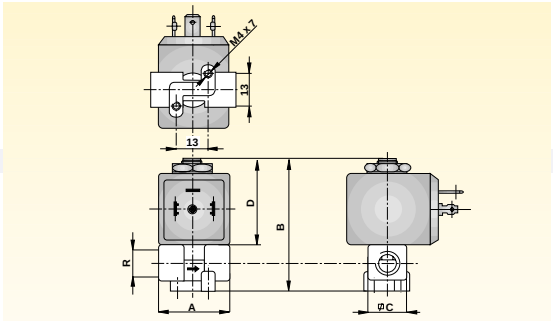

Fittings Ø R	A	B	C	D
["]	[mm]	[mm]	[mm]	[mm]
1/8	32	56,5	14	35,5
1/4	38	60	16	35,5

ORDER CODE

VE	131.4		V			[V]	[Hz] / d.c.

COMPLETE VALVE

SERIES

FITTINGS

B	1/8"
F	1/4"
G	1/4"

SEAL

V	Viton

Coil type	24 V 50 Hz*	115V 50 Hz*	220-230 V 50 Hz*	240 V 50 Hz*	12 V d.c.	24 V d.c.
KT 09	●	●	●	●		
KT 10					●	●
KH 09		●	●			

* models with 60 Hz availables

Note: Valve supplied with coil in a multipack. Connector to be ordered separately.

Parker Hannifin S.p.A.
via E. Fermi, 5
20060 Gessate (Milano) - Italy

Solenoid Valves for Automation

2/2 way - Normally Closed - Diaphragm pilot operated Fittings: G = 3/8" - 2"

Series **133**

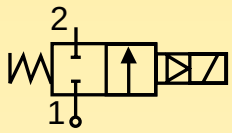

N.C.
Normally closed

Coil energised - open
Coil de-energised - closed

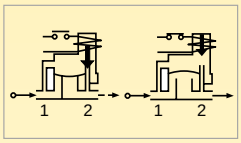

General description:

PARKER series **133** solenoid valves are diaphragm pilot operated and require a minimum differential pressure to operate.
They are used for applications with high flow rates and media such as **water, light oils (2°E) and others**, provided they are compatible with the construction materials used.
Series **133** valves are **normally closed**.

Temperatures:

The working temperature for media is:

maximum	**+90°C**
minimum	**-10°C**

with NBR seals (Buna N).
On request seals in Viton are available, for fittings ≦ **G 1"** for maximum working temperature **+140°C**.
The maximum ambient temperature is:

- with class **"F"** coils **+50°C**
- with class **"H"** coils **+80°C**

Application:

Series **133** solenoid valves are ideal for the automatic control of media in a wide range of applications such as:

- thermohydraulic systems;
- autoclaves;
- cooling of machine tools;
- industrial washing plants;
- evaporation towers;
- hospital equipment;
- irrigation systems;
- fire-fighting systems;
- wood-working machines;
- marble-working machines;
- molding machines;
- hygiene-health equipment.



Coils:

For series **133** valves class **"F"** coils **(155°C)**, encapsulated in thermoplastic containing 30% glass fiber (types: ZB, YB), are available.
Class **"H"** Coils are also available **(180°C)**, encapsulated in thermoplastic containing 40% glass fiber (type: ZH).
All the coils are for continuous service, 100% E.D.
The rated voltage tolerance is:
±10% for A.C. power supply and
+10% -5% for D.C.
The "Z" and "Y" coils can be used on a.c. with frequency 50/60 Hz (dualfrequency).
The "Z" coils have Faston terminals for **DIN 43650A** connectors with protection to **IP65.**
The "Y" coil has terminals with 2 x 1,000 mm cables with protection to **IP67.**
Series **133** solenoid valves are also available in a watertight version for applications where the conditions of humidity are particularly critical (type: YE 09).

Installation:

The valves can be mounted in any position without jeopardising their operation. It is however advisable to install them with the coil in a vertical position above the body.

Approvals:

• For the coils:
ZB 09 115V/50-60Hz, 220-230V/50-60Hz, 240V/50-60Hz
ZH 09 24V/50-60Hz
ZH 12 12VDC, 24VDC
YB 09 220-230V/50-60Hz

• The coils:
ZB 09 220-230V/50-60Hz, 240V/50-60Hz
YB 09 220-230V/50-60Hz

• UL Recognized Comp. coils mark:
ZB 09 24V/60Hz, 110-120V/60Hz, 208-240V/60Hz
YB 09 24V/60Hz, 110-120V/60Hz, 208-240V/60Hz

Parker Hannifin S.p.A.
via E. Fermi, 5
20060 Gessate (Milano) - Italy

for: water - light oils (2°E)

MATERIALS

• Valve body:	CW617N UNI EN 12165:98 brass stamping
• Seals:	NBR (Buna N) - Viton
• Enclosing tube:	AISI 304 stainless steel
• Plunger:	AISI 430F stainless steel
• Spring:	AISI 302 stainless steel
• Shading ring:	Copper

ELECTRICAL FEATURES

Coil type [ ]		Power [W]		Insulat. class
A.C.(~)	D.C.(=)	A.C.(~)	D.C.(=)	
ZB 09	ZB 12	9	12	F
YB 09	YB 12	9	12	F
ZH 09	ZH 12	9	12	H
ZH 14	ZH 16	14	16	H
YE 09	-	9	-	E

SPECIFICATION

Fittings Ø G	Valve type	Nominal orifice Ø	Flow coefficient Kv	Minimum pressure	Max differential pressure (M.O.P.D.)		Coil type	Weight	Notes
["]	[ ]	[mm]	[m³/h]	[bar]	in A.C.(~) [bar]	in D.C.(=) [bar]	[ ]	[Kg]	[ ]
3/8	133 I	13	3,00	0,1	20	20	Z - Y	0,550	1
1/2	133 A	13	3,00	0,1	20	20	Z - Y	0,580	1
3/4	133 C	20	8,40	0,1	20	20	Z - Y	1,020	1
1	133 D	25	9,60	0,1	20	20	Z - Y	1,080	1
1 1/4	133.2 E	35	25,20	0,1	10	10	Z - Y	3,150	1 - 2
1 1/2	133.2 F	40	30,00	0,1	10	10	Z - Y	2,900	1 - 2
2	133 G	50	37,20	0,1	10	10	Z - Y	4,300	1 - 2

Note: 1) NP (nominal pressure): 25 bar (from 1 1/4 to 3" PN 16 bar). 2) Slow closure version.

DIMENSIONS

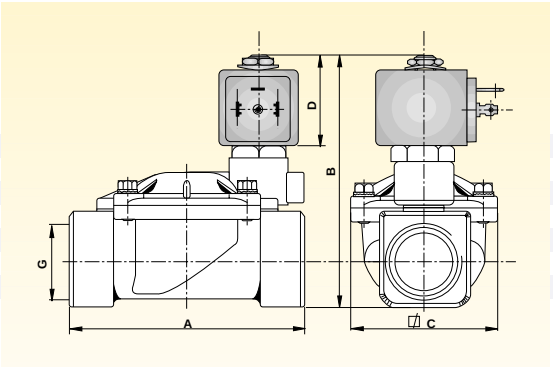

Fittings Ø G - NPT	A	B	C	D
["]	[mm]	[mm]	[mm]	[mm]
3/8 G	69,0	92,5	40,0	37,5
1/2 G	72,0	94,5	40,0	37,5
3/4 G	100,0	100,0	65,0	37,5
1 G	104,0	105,5	65,0	37,5
1 1/4 G	145,0	127,0	102,0	37,5
1 1/2 G	145,0	127,0	102,0	37,5
2 G	173,0	141,0	118,0	37,5

ORDER CODE

PM | **133** | | | | | [V] | [Hz] / d.c.

VALVE BODY

SERIES

FITTINGS

I	3/8" G
A	1/2" G
C	3/4" G
D	1" G
E	1 1/4" G
F	1 1/2" G
G	2" G

SEAL

N	NBR (Buna N)
*V	*Viton

Coil type	24 V 50/60 Hz	115V 50/60 Hz	220-230 V 50/60 Hz	240 V 50/60 Hz	12 V d.c.	24 V d.c.
ZB 09	●	●	●	●		
ZH 09	●					
ZB 12					●	●
ZH 12					●	●
YB 09	●	●	●			
YB 12					●	●
ZH 14	●	●	●			
ZH 16					●	●
YE 09	●		●			

Coil type	24 V / 60 Hz	110-120 V / 60 Hz	208-240 V / 60 Hz
ZB 09 UL	●	●	●
YB 09 UL	●	●	●

Note: Valve supplied with body (PM) and coil separate. Connector to be ordered separately. * Optional Viton for fittings up to 1".

Parker Hannifin S.p.A.
via E. Fermi, 5
20060 Gessate (Milano) - Italy

Solenoid Valves for Automation

2/2 way - Normally Closed - Diaphragm pilot operated

Fittings: G = 3/4" - 3"

Series 133 CMV

Closure speed control
FULLY OPEN

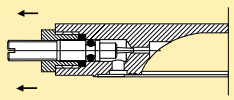

dwg. 1

Closure speed control
FULLY CLOSED

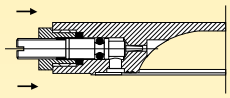

dwg. 2

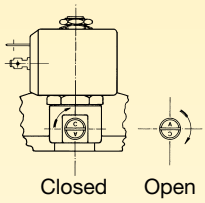

Closed Fig. 1 — Open Fig. 2

General description:

PARKER series **133CMV** solenoid valves are diaphragm pilot operated and require a minimum differential pressure to operate.
They are used for applications with high flow rates and media such as **water, light oils (2°E) and others**, provided they are compatible with the construction materials used.
Series **133** valves are **normally closed**.

Temperatures:

The working temperature for media is:

maximum **+90°C**
minimum **-10°C**
with NBR seals (Buna N).

On request seals in Viton are available, for fittings ≤ **G 1"** for maximum working temperature **+140°C**.
The maximum ambient temperature is:

- with class **"F"** coils **+50°C**
- with class **"H"** coils **+80°C**

Manual control:

The manual control is used to open the valve without supplying voltage to the coil. The control consists of a slotted-head screw for a screwdriver with two possible positions:

CLOSED (valve closed) if letter **"C"** is turned upside (fig. 1).
OPEN (valve open) if the letter **"A"** is turned upside (fig. 2).

When from the "Closed" position the screw is turned to the "Open" position (no matter if in clockwise or counterclockwise direction) the valve is completely opened.



Coils:

For series **133CMV** valves class **"F"** coils **(155°C)**, encapsulated in thermoplastic containing 30% glass fiber (types: ZB), are available.
All the coils are for continuous service, 100% E.D.
The rated voltage tolerance is:
±10% for A.C. power supply and **+10% - 5% for D.C.**
The coils can be used on a.c. with frequency of 50/60HZ (dualfrequency).
The coils have Faston terminals for **DIN 43650A** connector with protection to **IP65.**

Closure speed control:

The closure times of the models 133CMV can be changed by means of the adjusting screw (dwgs. 1 and 2). The latter, by acting as a throttle on the inlet equalisation (pilot) hole of the valve, slows down the closure speed of the valve, thus reducing water hammer.
The regulation range is from:

SCREW FULLY OPEN
dwg. 1 max. closure speed
SCREW FULLY CLOSED
dwg. 2 valve always open, i.e. the pilot hole of the valve closes completely.

Approvals:

- For the coils:

ZB 09 115V/50-60Hz, 220-230V/50-60Hz, 240V/50-60Hz
ZH 09 24V/50-60Hz
ZH 12 12VDC, 24VDC
YB 09 220-230V/50-60Hz

- The coils:

ZB 09 220-230V/50-60Hz, 240V/50-60Hz
YB 09 220-230V/50-60Hz

- UL Recognized Comp. coils mark:

ZB 09 24V/60Hz, 110-120V/60Hz, 208-240V/60Hz
YB 09 24V/60Hz, 110-120V/60Hz, 208-240V/60Hz

Tel: +45 63 12 83 00 | Email: ps@hymatik.com | www.hymatik.com | Hvidkaervej 27a, DK-5250 Odense SV, Denmark

for: water - light oils (2°E)

MATERIALS

• Valve body:	CW617N UNI EN 12165:98 brass stamping
• Seals:	NBR (Buna N) - Viton
• Enclosing tube:	AISI 304 stainless steel
• Plunger:	AISI 430F stainless steel
• Spring:	AISI 302 stainless steel
• Shading ring:	Copper

ELECTRICAL FEATURES

Coil type [ ]		Power [W]		Insulat. class
A.C.(~)	D.C.(=)	A.C.(~)	D.C.(=)	
ZB 09	ZB 12	9	12	F
YB 09	YB 12	9	12	F
ZH 09	ZH 12	9	12	H
ZH 14	ZH 16	14	16	H
YE 09	-	9	-	E

SPECIFICATION

Fittings Ø G	Valve type	Nominal orifice Ø	Flow coefficient Kv	Minimum pressure	Max differential pressure (M.O.P.D.)		Coil type	Weight	Notes
["]	[ ]	[mm]	[m³/h]	[bar]	in A.C.(~) [bar]	in D.C.(=) [bar]	[ ]	[Kg]	[ ]
3/4	133 C	20	8,40	0,1	10	10	Z - Y	1,020	1
1	133 D	25	9,60	0,1	10	10	Z - Y	1,080	1
1 1/4	133.2 E	35	25,20	0,1	5	5	Z - Y	3,150	1
1 1/2	133.2 F	40	30,00	0,1	5	5	Z - Y	2,900	1
2	133 G	50	37,20	0,1	5	5	Z - Y	4,300	2
2 1/2	133 L	65	66,00	0,2	10	10	Z -Y	13,600	2
3	133 M	75	80,00	0,2	10	10	Z - Y	11,900	2

Note: 1) NP (nominal pressure): 25 bar. 2) Valve supplied with mechanical part (M.P.) and coil separate.

DIMENSIONS

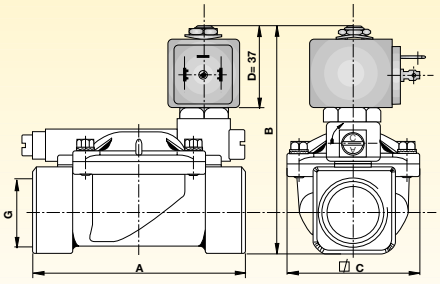

Fittings Ø G	A	B	C	D
["]	[mm]	[mm]	[mm]	[mm]
3/4	100,0	100,0	65,0	37,5
1	104,0	105,0	65,0	37,5
1 1/4	145,0	127,0	102,0	37,5
1 1/2	145,0	127,0	102,0	37,5
2	173,0	141,0	118,0	37,5
2 1/2	245,0	188,0	184,0	37,5
3	250,0	188,0	184,0	37,5

ORDER CODE

PM | 133 | | N | CMV | | | [V] | [Hz] / d.c.

- PM — VALVE BODY
- 133 — SERIES
- FITTINGS
  - C 3/4"
  - D 1"
  - E 1 1/4"
  - F 1 1/2"
  - G 2"
  - L 2 1/2"
  - M 3"
- N — SEAL: N NBR (Buna N)
- CMV — MANUAL CLOSURE SPEED CONTROL

Coil type	24 V 50/60 Hz	115V 50/60 Hz	220-230 V 50/60 Hz	240 V 50/60 Hz	12 V d.c.	24 V d.c.
ZB 09	●	●	●	●		
ZH 09	●					
ZB 12					●	●
ZH 12					●	●
YB 09	●	●	●			
YB 12					●	●
ZH 14	●	●	●			
ZH 16					●	●
YE 09	●		●			

Coil type	24 V / 60 Hz	110-120 V / 60 Hz	208-240 V / 60 Hz
ZB 09 UL	●	●	●
YB 09 UL	●	●	●

Note: Valve supplied with body (PM) and coil separate. Connector to be ordered separately.

Parker Hannifin S.p.A.
via E. Fermi, 5
20060 Gessate (Milano) - Italy

Solenoid Valves for Automation

2/2 way - Normally Open - Direct operated

Fittings: G = 1/4”

Series **136**

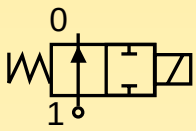

N.O.
Normally open

Coil energised - closed
Coil de-energised - open

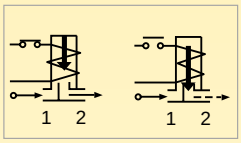

General description:

PARKER series **136** solenoid valves are direct operated and do not require a minimum differential pressure to operate.
They are used for general applications with media such as **water, air, light oils (2°E) and inert gases**, provided they are compatible with the construction materials used.
Series **136** solenoid valves are **normally open** with inlet and outlet in line.

Temperatures:

The working temperature for media is:

maximum	**+140°C**
minimum	**-10°C**

The maximum ambient temperature is:

- with class **“F”** coils **+50°C**
- with class **“H”** coils **+80°C**

Coils:

For series **136** valves class **“F”** coils **(155°C)**, encapsulated in thermoplastic containing 30% glass fiber (types: ZB, YB), and class **“H”** coils **(180°C)**, encapsulated in thermoplastic containing 40% glass fiber (type: ZH), are available.
All the coils are for continuous service, 100% E.D.
The rated voltage tolerance is:
±10% for A.C. power supply and
+10% -5% for D.C.
The “Z” and “Y” coils can be used on a.c. with frequency of 50/60Hz (dualfrequency).
The “Z” coils have Faston terminals for **DIN 43650A** connectors with protection to **IP65**.
The “Y” coil has terminals with 2 x 1,000 mm cables with protection to **IP67.**

Application:

Series **136** solenoid valves are ideal for the automatic control of media for the following applications:
•generating sets;
•water purification plants;
•sterilisers;
•air dehumidifiers;
•industrial refrigerators;
•distribution of light oils.
For air applications the maximum differential pressure (MOPD) can be increased by 25%.

Installation:

The valves can be mounted in any position without jeopardising their operation. It is however advisable to install them with the coil in a vertical position above the body.

Approvals:

- For the coils:

ZB 14	115V/50-60Hz, 220-230V/50-60Hz
ZH 14	24V/50-60Hz
ZH 16	12V DC, 24V DC
YB 14	220-230V/50-60Hz
YB 16	24V DC

- For the coil:

ZB 14	220-230V/50-60Hz



Parker Hannifin S.p.A.
via E. Fermi, 5
20060 Gessate (Milano) - Italy

for: water - air - light oils (2°E) - inert gases

MATERIALS

• Valve body:	CW617N UNI EN 12165:98 brass stamping
• Seals:	Viton
• Enclosing tube:	AISI 304 stainless steel
• Plunger:	AISI 430F stainless steel
• Spring:	AISI 302 stainless steel
• Shading ring:	Copper

ELECTRICAL FEATURES

Coil type [ ]		Power [W]		Insulat. class
A.C.(~)	D.C.(=)	A.C.(~)	D.C.(=)	
ZB 14	ZB 16	14	16	F
ZH 14	ZH 16	14	16	H
YB 14	YB 16	14	16	F

SPECIFICATION

Fittings Ø G	Valve type	Nominal orifice Ø	Flow coefficient Kv	Minimum pressure	Max differential pressure (M.O.P.D.)		Coil type	Weight	Notes
["]	[ ]	[mm]	[m³/h]	[bar]	in A.C.(~) [bar]	in D.C.(=) [bar]	[ ]	[Kg]	[ ]
1/4	136 Y	3	0,240	0	5,5	5,5	Z - Y	0,36	1

Note: 1) NP (nominal pressure): 64 bar.

DIMENSIONS

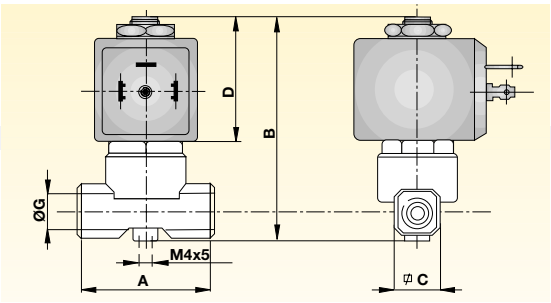

Fittings Ø G	A	B	C	D
["]	[mm]	[mm]	[mm]	[mm]
1/4	40	81	17	43

ORDER CODE

PM	136	Y	V			[V]	[Hz] / d.c.				
VALVE BODY		FITTINGS		Coil type		24 V 50/60 Hz	115V 50/60 Hz	220-230 V 50/60 Hz	240 V 50/60 Hz	12 V d.c.	24 V d.c.
		Y	1/4"	ZB	14	●	●	●	●		
				ZB	16					●	●
				ZH	14	●	●	●			
				ZH	16					●	●
				YB	14	●	●	●			
				YB	16					●	●
SERIES			SEAL								
			V	Viton							

Note: Valve supplied with body (PM) and coil separate. Connector to be ordered separately.

Parker Hannifin S.p.A.
via E. Fermi, 5
20060 Gessate (Milano) - Italy

Solenoid Valves for Automation

3/2 way - Universal - Direct operated | **Fittings: G = 1/8" - 1/4"**

Series **139**

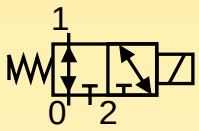

Universal Solenoid valve

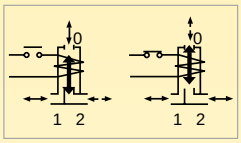

General description:

PARKER series **139** solenoid valves are universal and may be used as normally closed, normally open and for bypass and mixer applications depending on the flow pattern chosen.
They are used for general applications with media such as **water, air, light oils (2°E) and inert gases**, provided they are compatible with the construction materials used.
Since they are direct-acting valves, they do not require a minimum differential pressure and function within the maximum differential pressure values (MOPD) indicated in the specification table.
The series **139** seal bubble tight.

Temperatures:

The working temperature for media is:

maximum	**+140°C**
minimum	**-10°C**

The maximum ambient temperature is:

- with class **"F"** coils **+50°C**
- with class **"H"** coils **+80°C**

Application:

Series **139** solenoid valves are used in applications which require actuation and automatic discharge of moving systems. They enable the flow to be diverted towards a single outlet or to select one flow from two.
Some typical application examples:
•Pneumatic systems;
•Air compressors;
•Pilot valves;
•Batch systems;
•Paper and board manufacturing machines;
•Hydrocleaners;
•Hygiene-health systems;
•Instruments;
•Dryers;
•Automatic dispensers.



Coils:

For series **139** valves class **"F"** coils **(155°C)** are available encapsulated in thermoplastic containing 30% glass fiber (types: ZB, YB).
Class **"H"**coils **(180°C)** are also available encapsulated in thermoplastic containing 40% glass fiber (type: ZH).
All the coils are for continuous service, 100% E.D.
The rated voltage tolerance is:
±10% for A.C. power supply and
+10% -5% for D.C.
The "Z" and "Y" coils can be used on a.c. with frequency of 50/60Hz (dualfrequency).
The "Z" coils have Faston terminals for **DIN 43650A** connectors with protection to **IP65**.
The "Y" coil has terminals with 2 x 1,000 mm cables with protection to **IP67**.

Installation:

The valves can be mounted in any position without jeopardising their operation. It is however advisable to install them with the coil in a vertical position above the body.
The valve body has a M4 x 8 mounting hole.

Approvals:

• For the coils:

ZB 09	115V/50-60Hz, 220-230V/50-60Hz, 240V/50-60Hz
ZH 09	24V/50-60Hz
ZH 12	12V DC, 24V DC
YB 09	220-230V/50-60Hz

• For the coils:

ZB 09	220-230V/50-60Hz, 240V/50-60Hz
YB 09	220-230V/50-60Hz

•UL Recognized Comp. coils mark:

ZB 09	24V/60Hz, 110-120V/60Hz, 208-240V/60Hz
YB 09	24V/60Hz, 110-120V/60Hz, 208-240V/60Hz

Parker Hannifin S.p.A.
via E. Fermi, 5
20060 Gessate (Milano) - Italy

Tel: +45 63 12 83 00 | Email: ps@hymatik.com | www.hymatik.com | Hvidkaervej 27a, DK-5250 Odense SV, Denmark

for: water - air - light oils (2°E) - inert gases

MATERIALS

• Valve body:	CW617N UNI EN 12165:98 brass stamping
• Seals:	Viton
• Enclosing tube:	AISI 304 stainless steel
• Plunger:	AISI 430F stainless steel
• Spring:	AISI 302 stainless steel
• Shading ring:	Copper

ELECTRICAL FEATURES

Coil type [ ]		Power [W]		Insulat. class
A.C.(~)	D.C.(=)	A.C.(~)	D.C.(=)	
ZB 09	ZB 12	9	12	F
YB 09	YB 12	9	12	F
ZH 09	ZH 12	9	12	H
ZH 14	ZH 16	14	16	H

SPECIFICATION

Fittings Ø G	Valve type	Nominal orifice Ø	Flow coefficient Kv	Minimum pressure	Max differential pressure (M.O.P.D.)		Coil type	Weight	Notes
["]	[ ]	[mm]	[m³/h]	[bar]	in A.C.(~) [bar]	in D.C.(=) [bar]	[ ]	[Kg]	[ ]
1/8	139 A	1,5 (1,5)*	0,07	0	10	10	Z - Y	0,360	1
1/8	139 B	2,0 (2,0)*	0,12	0	7	7	Z - Y	0,360	1
1/4	139 F	2,0 (2,0)*	0,12	0	7	7	Z - Y	0,360	1
1/4	139 G	2,5 (2,5)*	0,17	0	4	4	Z - Y	0,360	1
1/4	139 L	3,5 (2,5)*	0,30	0	1	1	Z - Y	0,360	1

Note: 1) NP (nominal pressure): 64 bar. 2) * Discharge diameter.

DIMENSIONS

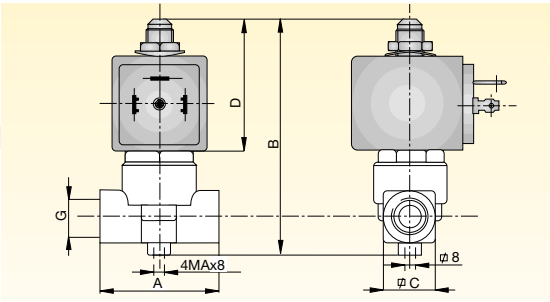

Fittings Ø G	A	B	C	D
["]	[mm]	[mm]	[mm]	[mm]
1/8	40,0	82,5	18	45,5
1/4	40,0	82,5	18	45,5

ORDER CODE

PM	139		V			[V]		[Hz] / d.c.	
VALVE BODY		FITTINGS							
	SERIES	A 1/8"		SEAL		Coil type	24 V 50/60 Hz	115V 50/60 Hz	220-230 V 50/60 Hz	240 V 50/60 Hz	12 V d.c.	24 V d.c.
		B 1/8"		V Viton		ZB 09	●	●	●	●		
		F 1/4"				ZH 09	●					
		G 1/4"				ZB 12					●	●
		L 1/4"				ZH 12					●	●
						YB 09	●	●	●			
						YB 12					●	●
						ZH 14	●	●	●			
						ZH 16					●	●

Note: Valve supplied with body (PM) and coil separate. Connector to be ordered separately.

Parker Hannifin S.p.A.
via E. Fermi, 5
20060 Gessate (Milano) - Italy

Solenoid Valves for Automation

3/2 way - Normally Closed - Direct operated **Fittings: G = 1/8" - 1/4"**

Series **141**

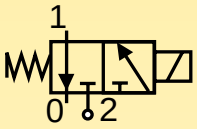

N.C.
Normally closed

Coil energised - open
Coil de-energised - closed

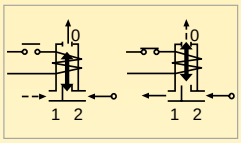

General description:

PARKER series **141** solenoid valves are direct operated and do not require a minimum differential pressure to operate.
They are used for general applications with media such as **water, air, light oils (2°E) and inert gases**, provided they are compatible with the construction materials used.
The series **141 valves** seal bubble tight.
Series **141** valves are **normally closed**.

Temperatures:

The working temperature for media is:

maximum	**+140°C**
minimum	**-10°C**

The maximum ambient temperature is:

- with class **"F"** coils **+50°C**
- with class **"H"** coils **+80°C**

Application:

Series **141** solenoid valves are used in applications which require actuation and automatic discharge of moving systems in the following applications:
•Sterilisers;
•Espresso coffee machines;
•Air compressors;
•Diesel oil burners;
•Pilot valves;
•Polyurethane plants;
•Water treatment plants.



Coils:

For series **141** valves class **"F"** coils **(155°C)** are available encapsulated in thermoplastic containing 30% glass fiber (types: ZB, YB).
Class **"H"** coils **(180°C)** are also available encapsulated in thermoplastic material containing 40% glass fiber (type: ZH).
All the coils are for continuous service, 100% E.D.
The rated voltage tolerance is:
±10% for A.C. power supply and
+10% -5% for D.C.
The "Z" and "Y" coils can be used on a.c. with frequency of 50/60 Hz (dualfrequency).
The "Z" coils have Faston terminals for **DIN 43650A** connectors with protection to **IP65**.
The "Y" coil has terminals with 2 x 1,000 mm cables with protection to **IP67**.

Installation:

The valves can be mounted in any position without jeopardising their operation. It is however advisable to install them with the coil in a vertical position above the body.
The valve body has a M4 x 8 mounting hole.

Approvals:

- For the coils:

ZB 09 15V/50-60Hz, 220-230V/50-60Hz, 240V/50-60Hz
ZH 09 24V/50-60Hz
ZH 12 12V DC, 24V DC
YB 09 220-230V/50-60Hz

- For the coils:

ZB 09 220-230V/50-60Hz, 240V/50-60Hz
YB 09 220-230V/50-60Hz

- UL Recognized Comp. coils mark:

ZB 09 24V/60Hz, 110-120V/60Hz, 208-240V/60Hz
YB 09 24V/60Hz, 110-120V/60Hz, 208-240V/60Hz

Parker Hannifin S.p.A.
via E. Fermi, 5
20060 Gessate (Milano) - Italy

for: water - air - light oils (2°E) - inert gases

MATERIALS

• Valve body:	CW617N UNI EN 12165:98 brass stamping
• Seals:	Viton
• Enclosing tube:	AISI 304 stainless steel
• Plunger:	AISI 430F stainless steel
• Spring:	AISI 302 stainless steel
• Shading ring:	Copper

ELECTRICAL FEATURES

Coil type [ ]		Power [W]		Insulat. class
A.C.(~)	D.C.(=)	A.C.(~)	D.C.(=)	
ZB 09	ZB 12	9	12	F
YB 09	YB 12	9	12	F
ZH 09	ZH 12	9	12	H
ZH 14	ZH 16	14	16	H

SPECIFICATION

Fittings Ø G	Valve type	Nominal orifice Ø	Flow coefficient Kv	Minimum pressure	Max differential pressure (M.O.P.D.)		Coil type	Weight	Notes
["]	[ ]	[mm]	[m³/h]	[bar]	in A.C.(~) [bar]	in D.C.(=) [bar]	[ ]	[Kg]	[ ]
1/8	141 A	1,5 (1,5)*	0,07	0	15	15	Z - Y	0,360	1
1/8	141 B	2,0 (2,5)*	0,12	0	10	10	Z - Y	0,360	1
1/4	141 F	2,0 (2,5)*	0,12	0	10	10	Z - Y	0,360	1
1/4	141 G	2,5 (2,5)*	0,17	0	7	7	Z - Y	0,360	1

Note: 1) NP (nominal pressure): 64 bar. 2) * Exhaust diameter.

DIMENSIONS

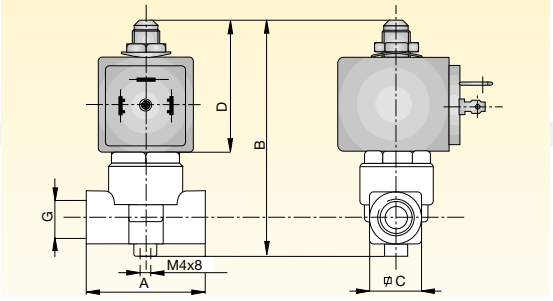

Fittings Ø G	A	B	C	D
["]	[mm]	[mm]	[mm]	[mm]
1/8	40	82,5	18	45,5
1/4	40	82,5	18	45,5

ORDER CODE

PM | 141 | | V | | | [V] | [Hz] / d.c.

VALVE BODY

SERIES

FITTINGS

A	1/8"
B	1/8"
F	1/4"
G	1/4"

SEAL

V	Viton

Coil type		24 V 50/60 Hz	115V 50/60 Hz	220-230 V 50/60 Hz	240 V 50/60 Hz	12 V d.c.	24 V d.c.
ZB	09	●	●	●	●		
ZH	09	●					
ZB	12					●	●
ZH	12					●	●
YB	09	●	●	●			
YB	12					●	●
ZH	14	●	●	●			
ZH	16					●	●

Note: Valve supplied with body (PM) and coil separate. Connector to be ordered separately.

Parker Hannifin S.p.A.
via E. Fermi, 5
20060 Gessate (Milano) - Italy

Solenoid Valves for Automation

2/2 way - Normally Open - Diaphragm pilot operated — Fittings: G = 3/8" - 3"

Series **143**

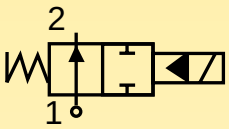

N.O.
Normally open
Coil energised - closed
Coil de-energised - open

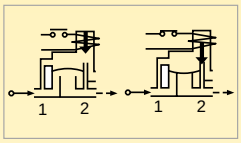

General description:

PARKER series **143** solenoid valves are diaphragm pilot operated and require a minimum differential pressure to operate.
They are used for general applications with high flow rates and media such as **water, light oils (2°E) and others**, provided they are compatible with the construction materials used.
Series **143** valves are **normally open**.

Temperatures:

The working temperature for media is:

maximum	**+90°C**
minimum	**-10°C**

with NBR seals (Buna N).
On request seals in Viton are available for fittings ≤ **G 1"** and maximum working temperature **+ 140°C**.
The maximum ambient temperature is;

- with class **"F"** coils **+50°C**
- with class **"H"** coils **+80°C**

Application:

Series **143** solenoid valves are ideal for the automatic control of media in a wide range of applications such as:
•Thermohydraulic systems;
•Air compressors;
•Washing plants;
•Hydrocleaners.
For air and inert gases they can be used for low operating frequencies.

Coils:

For series **143** valves class **"F"** coils **(155°C)** are available encapsulated in thermoplastic containing 30% glass fiber (types: ZB, YB).
Class **"H"** coils **(180°C)** are also available encapsulated in thermoplastic containing 40% glass fiber (type: ZH).
All the coils are for continuous service, 100% E.D.
The rated voltage tolerance is:
±10% for A.C. power supply and
+10% -5% for D.C.
The "Z" and "Y" coils can be used on a.c. with frequency of 50/60Hz (dualfrequency).
The "Z" coils have Faston terminals for **DIN 43650A** connector with protection to **IP65**.
The "Y" coil has terminals with 2 x 1,000 mm cables with protection to **IP67**.

Installation:

The valves can be mounted in any position without jeopardising their operation. It is however advisable to install them with the coil in a vertical position above the body.

Approvals:

- For the coils:

ZB 14	15V/50-60Hz, 220-230V/50-60Hz
ZH 16	12V DC, 24V DC
YB 14	220-230V/50-60Hz
ZH 14	24V/50-60Hz

- For the coil:

ZB 14	220-230V/50-60Hz



Parker Hannifin S.p.A.
via E. Fermi, 5
20060 Gessate (Milano) - Italy

for: water - light oils (2°E)

MATERIALS

• Valve body:	CW617N UNI EN 12165:98 brass stamping
• Seals:	NBR (Buna N) - Viton
• Enclosing tube:	AISI 304 stainless steel
• Plunger:	AISI 430F stainless steel
• Spring:	AISI 302 stainless steel
• Shading ring:	Copper

ELECTRICAL FEATURES

Coil type [ ]		Power [W]		Insulat. class
A.C.(~)	D.C.(=)	A.C.(~)	D.C.(=)	
ZB 14	ZB 16	14	16	F
YB 14	YB 16	14	16	F
ZH 14	ZH 16	14	16	H

SPECIFICATION

Fittings Ø G	Valve type	Nominal orifice Ø	Flow coefficient Kv	Minimum pressure	Max differential pressure (M.O.P.D.)		Coil type	Weight	Notes
["]	[ ]	[mm]	[m³/h]	[bar]	in A.C.(~) [bar]	in D.C.(=) [bar]	[ ]	[Kg]	[ ]
3/8	143 I	13	3,00	0,1	20	20	Z - Y	0,560	1
1/2	143 A	13	3,00	0,1	20	20	Z - Y	0,590	1
3/4	143 C	20	8,40	0,1	20	20	Z - Y	1,050	1
1	143 D	25	9,60	0,1	20	20	Z - Y	1,110	1
1 1/4	143.2 E	35	25,20	0,1	10	10	Z - Y	3,120	1
1 1/2	143.2 F	40	30,00	0,1	10	10	Z - Y	2,870	1
2	143 G	50	37,20	0,1	10	10	Z - Y	4,260	1
2 1/2	143 L	65	66,00	0,2	10	10	Z - Y	13,64	1
3	143 M	75	80,00	0,2	10	10	Z - Y	11,75	1

Note: 1) NP (nominal pressure): 25 bar (from 1 1/4" to 2" PN 16 bar).

DIMENSIONS

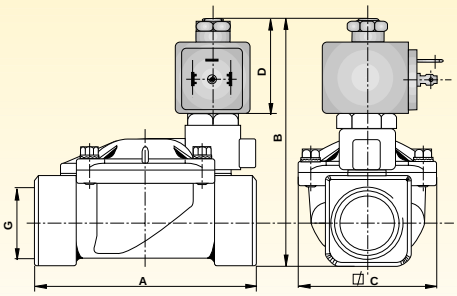

Fittings Ø G	A	B	C	D
["]	[mm]	[mm]	[mm]	[mm]
3/8	69	92,5	40	43
1/2	72	94,5	40	43
3/4	100	100,0	65	43
1	104	105,5	65	43
1 1/4	145	127,0	102	43
1 1/2	145	127,0	102	43
2	173	141,0	118	43
2 1/2	245	188,0	184	43
3	250	188,0	184	43

ORDER CODE

PM | **143** | | | | | [V] | [Hz] / d.c.

VALVE BODY

SERIES

FITTINGS

I	3/8"
A	1/2"
C	3/4"
D	1"
• 2 E	1 1/4"
• 2 F	1 1/2"
G	2"
L	2 1/2"
M	3"

SEAL

N	NBR (Buna N)
*V	Viton

Coil type	24 V 50/60 Hz	115V 50/60 Hz	220-230 V 50/60 Hz	240 V 50/60 Hz	12 V d.c.	24 V d.c.
ZB 14	●	●	●	●		
ZB 16					●	●
YB 14	●		●			
YB 16					●	●
ZH 14	●	●	●			
ZH 16					●	●

Note: Valve supplied with body (PM) and coil separate. Connector to be ordered separately. * Optional Viton for fitting up to 1".

Parker Hannifin S.p.A.
via E. Fermi, 5
20060 Gessate (Milano) - Italy

Solenoid Valves for Automation

2/2 way - Normally Closed - Direct operated

Fittings: G = 1/8" - 1/4"

Series **146**

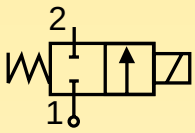

N.C.
Normally closed

Coil energised - open
Coil de-energised - closed

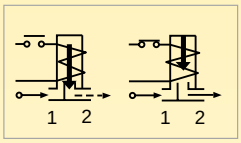

General description:

PARKER series **146** solenoid valves are direct operated and do not require a minimum differential pressure to operate.
They are used for general applications with media such as **water, air, light oils (2°E) and inert gases**, provided they are compatible with the construction materials used.
Series **146** valves are **normally closed**.

Temperatures:

The working temperature for media is:

maximum	**+140°C**
minimum	**-10°C**

The maximum ambient temperature is:

•with class **"F"** coils	**+50°C**
•with class **"H"** coils	**+80°C**

Application:

Series **146** solenoid valves are ideal for the automatic control of media in a wide range of applications such as:
• Burglar alarm systems;
•Sterilisers;
•Espresso coffee machines;
•Diesel oil burners;
•Shoe manufacturing machinery;
•Ceramic plants;
•Air dryers;
•Automatic dispensers;
•Industrial washing machines;
•Water massage systems;
•Floor washing machines;
•Welding systems;
•Machines for plastics;
•Humidifiers.
For use with air the maximum differential pressure (MOPD) may be increased by 25%.



Coils:

For series **146** valves class **"F"** coils **(155°C)**, encapsulated in thermoplastic containing 30% glass fiber (type ZB, YB), and class **"H"** coils **(180°C)**, encapsulated in thermoplastic containing 40% glass fiber (type: ZH), are available.
All the coils are for continuous service, 100% E.D.
The rated voltage tolerance is:
±10% for A.C. power supply and
+10% -5% for D.C.
The "Z" and "Y" coils can be used on a.c. with frequency of 50/60Hz (dualfrequency).
The "Z" coils have Faston terminals for **DIN 43650A** connectors with protection to **IP65**.
The "Y" coil has terminals with 2 x 1,000 mm cables with protection to **IP67**.

Installation:

The valves can be mounted in any position without jeopardising their operation. It is however advisable to install them with the coil in a vertical position above the body.

Approvals:

• For the coils:

ZB 09	115V/50-60Hz, 220-230V/50-60Hz, 240V/50-60Hz
ZH 09	24V/50-60Hz
ZH 12	12V DC, 24V DC
ZB 14	115V/50-60Hz, 220-230V/50-60Hz
ZH 14	24V/50-60Hz
ZH 16	24V DC, 12V DC
YB 09	220-230V/50-60Hz
YB 14	220-230/50-60Hz

• For the coils:

ZB 09	220-230V/50-60Hz, 240V/50-60Hz
ZB 14	220-230V/50-60Hz
YB 09	220-230V/50-60Hz

• For the model VE 146.3 ABV with coil
ZH 14 with voltage 220-230V/50-60Hz

• UL Recognized Comp. coils mark:

ZB 09	24V/60Hz, 110-120V/60Hz, 208-240V/60Hz
YB 09	24V/60Hz, 110-120V/60Hz, 208-240V/60Hz

Series **146**

Parker Hannifin S.p.A.
via E. Fermi, 5
20060 Gessate (Milano) - Italy

for: water - air - light oils (2°E) - inert gases

MATERIALS

- Valve body: CW617N UNI EN 12165:98 brass stamping
- Seals: Viton
- Enclosing tube: AISI 304 stainless steel
- Plunger: AISI 430F stainless steel
- Spring: AISI 302 stainless steel
- Shading ring: Copper

ELECTRICAL FEATURES

Coil type [ ]		Power [W]		Insulat. class
A.C.(~)	D.C.(=)	A.C.(~)	D.C.(=)	
ZB 09	ZB 12	9	12	F
ZB*14	ZB*16	14	16	F
YB 09	YB 12	9	12	F
YB*14	YB*16	14	16	F
ZH*14	ZH*16	14	16	H

SPECIFICATION

Fittings Ø G	Valve type	Nominal orifice Ø	Flow coefficient Kv	Minimum pressure	Max differential pressure (M.O.P.D.)		Coil type	Weight	Notes
["]	[ ]	[mm]	[m³/h]	[bar]	in A.C.(~) [bar]	in D.C.(=) [bar]	[ ]	[Kg]	[ ]
1/8	146 F	2,5	0,197	0	15	12	Z - Y	0,340	1
1/8	146 H	3,0	0,270	0	10	8	Z - Y	0,340	1
1/4	146 W	2,5	0,197	0	15	12	Z - Y	0,340	1
1/4	146 Y	3,0	0,270	0	10	8	Z - Y	0,340	1
1/4	146.3 K	4,5	0,527	0	10	3	Z *- Y*	0,340	1
1/4	146.3 AB	6,0	0,750	0	8	1	Z* - Y*	0,340	1

Note: 1) NP (nominal pressure): 64 bar

See specification table.

DIMENSIONS

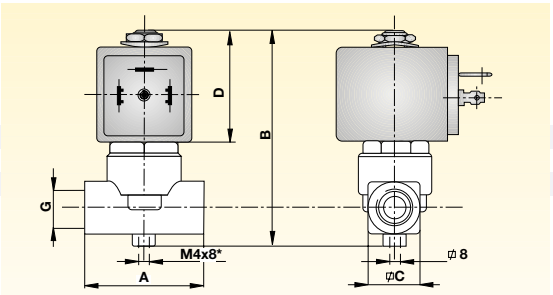

Fittings Ø G	A	B	C	D
["]	[mm]	[mm]	[mm]	[mm]
*1/8	40,0	74,5	18	37,5
1/4	40,0	74,5	18	37,5
*1/4	40,0	74,5	18	37,5

* excluded mod. 146.3K - 146.3AB

ORDER CODE

PM | 146 | | V | | | [V] | [Hz] / d.c.

VALVE BODY

SERIES

FITTINGS

F	1/8"
H	1/8"
W	1/4"
Y	1/4"
•3K	1/4"
•3AB	1/4"

SEAL

V	Viton

Coil type	24 V 50/60 Hz	115V 50/60 Hz	220-230 V 50/60 Hz	240 V 50/60 Hz	12 V d.c.	24 V d.c.
ZB 09	●	●	●	●		
ZH 09	●					
ZB 12					●	●
ZH 12					●	●
ZB 14	●	●	●	●		
ZB 16					●	●
YB 09	●	●	●			
YB 12					●	●
YB 14	●		●			
YB 16					●	●
ZH 14	●	●	●			
ZH 16					●	●

Coil type	24 V / 60 Hz	110-120 V / 60 Hz	208-240 V / 60 Hz
ZB 09 UL	●	●	●
YB 09 UL	●	●	●

Note: Valve supplied with body (PM) and coil separate. Connector to be ordered separately.

Parker Hannifin S.p.A.
via E. Fermi, 5
20060 Gessate (Milano) - Italy

Solenoid Valves for Automation

2/2 way - Normally open - Direct operated

Fittings: G = 1/4”

Series **151**

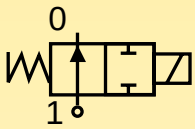

N.O.
Normally open

Coil energised - closed
Coil de-energised - open

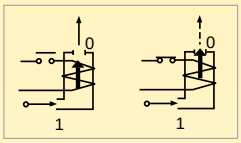

General description:

PARKER series **151** solenoid valves have direct action and do not require a minimum differential pressure to operate.
They are used for general applications with media such as **water, air, light oils (2° E) and inert gases**, provided they the are compatible with the costruction materials used. Series **151** valves are **normally open** with connections at 90° on valve body (inlet) and enclosing tube (outlet).

Temperatures:

The working temperature for media is:

maximum	**+140°C**
minimum	**-10°C**

The maximum ambient temperature is:

•with class **“F”** coils	**+50°C**
•with class **“H”** coils	**+80°C**

Application:

Series **151** solenoid valves are ideal for the automatic control of media in the following applications:
•Air compressors;
•Pneumatic systems;
•Textile machines;
•Water treatment plants;
•Diesel oil burners.
For air applications the maximum differential pressure (MOPD) may be increased by 25%.



Coils:

For series **151** valves class **“F”** coils **(155°C)**, encapsulated in thermoplastic containing 30% glass fiber (types: ZB, YB), and class **“H”** coils **(180°C)**, encapsulated in thermoplastic containing 40% glass fiber (type: ZH), are available.
All the coils are for continuous service, 100% E.D.
The rated voltage tolerance is:
±10% for A.C. power supply and
+10% -5% for D.C.
The “Z” and “Y” coils can be used on a.c. with frequency of 50/60Hz (dualfrequency).
The “Z” coils have Faston terminals for **DIN 43650A** connectors with protection to **IP65**.
The “Y” coil has terminals with 2 x 1,000 mm cables with protection to **IP67**.

Installation:

The valves can be mounted in any position without jeopardising their operation. It is however advisable to install them with the coil in a vertical position above the body.

Approvals:

• For the coils:

ZB 09	115V/50-60Hz, 220-230V/50-60Hz
ZH 09	24V/50-60Hz
ZH 12	12V DC, 24V DC
YB 09	220-230V/50-60Hz

• For the coils:

ZB 09	220-230V/50-60Hz, 240V/50-60Hz
YB 09	220-230V/50-60Hz

• UL Recognized Comp. coils mark:

ZB 09	24V/60Hz, 110-120V/60Hz, 208-240V/60Hz
YB 09	24V/60Hz, 110-120V/60Hz, 208-240V/60Hz

Parker Hannifin S.p.A.
via E. Fermi, 5
20060 Gessate (Milano) - Italy

for: water - air - light oils (2°E) - inert gases

MATERIALS

• Valve body:	CW617N UNI EN 12165:98 brass stamping
• Seals:	Viton
• Enclosing tube:	AISI 304 stainless steel
• Plunger:	AISI 430F stainless steel
• Spring:	AISI 302 stainless steel
• Shading ring:	Copper

ELECTRICAL FEATURES

Coil type [ ]		Power [W]		Insulat. class
A.C.(~)	D.C.(=)	A.C.(~)	D.C.(=)	
ZB 09	ZB 12	9	12	F
YB 09	YB 12	9	12	F
ZH 09	ZH 12	9	12	H
ZH 14	ZH 16	14	16	H

SPECIFICATION

Fittings Ø G	Valve type	Nominal orifice Ø	Flow coefficient Kv	Minimum pressure	Max differential pressure (M.O.P.D.)		Coil type	Weight	Notes
["]	[ ]	[mm]	[m³/h]	[bar]	in A.C.(~) [bar]	in D.C.(=) [bar]	[ ]	[Kg]	[ ]
1/4	151 G	1,5	0,078	0	22	22	Z - Y	0,330	1
1/4	151 H	2,0	0,150	0	12	12	Z - Y	0,330	1

Note: 1) NP (nominal pressure): 64 bar.

DIMENSIONS

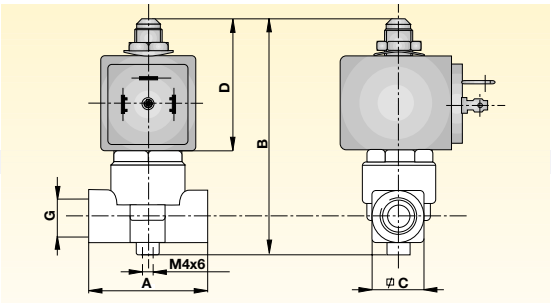

Fittings Ø G	A	B	C	D
["]	[mm]	[mm]	[mm]	[mm]
1/4	40,0	82,5	18	45,5

ORDER CODE

PM	151		V			[V]	[Hz] / d.c.
VALVE BODY		FITTINGS					
		G 1/4"					
		H 1/4"					
	SERIES		SEAL				
			V Viton				

Coil type	24 V 50/60 Hz	115V 50/60 Hz	220-230 V 50/60 Hz	240 V 50/60 Hz	12 V d.c.	24 V d.c.
ZB 09	●	●	●	●		
ZH 09	●					
ZB 12					●	●
ZH 12					●	●
YB 09	●	●	●			
YB 12					●	●
ZH 14	●	●	●			
ZH 16					●	●

Coil type	24 V / 60 Hz	110-120 V / 60 Hz	208-240 V / 60 Hz
ZB 09 UL	●	●	●
YB 09 UL	●	●	●

Note: Valve supplied with body (PM) and coil separate. Connector to be ordered separately.

Parker Hannifin S.p.A.
via E. Fermi, 5
20060 Gessate (Milano) - Italy

Solenoid Valves for Automation

2/2 way - Normally Closed - Diaphragm pilot operated

Fittings: G = 3/8" - 1"

Series **168.1**

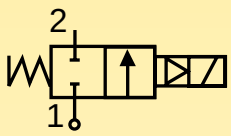

N.C.
Normally closed

Coil energised - open
Coil de-energised - closed

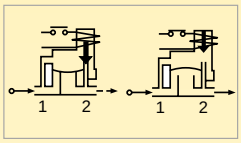

General description:

PARKER series **168.1** solenoid valves are diaphragm pilot operated and therefore require a minimum differential pressure to operate.
They are used for **air** applications, even with high operating frequencies. The diaphragm is made of plastic with a fabric reinforcement.
Series **168.1** valves are **normally closed**.
On request and for large orders, all the models can be supplied with manual control (MC).

Temperatures:

The working temperature for media is:

maximum	**+90°C**
minimum	**-10°C**

The maximum ambient temperature is:

•with class **"F"** coils	**+50°C**
•with class **"H"** coils	**+80°C**

Application:

Series **168.1** solenoid valves are ideal for air applications where high flow rates with high operating frequencies are required.
Some typical application examples are:
•Air compressors;
•Dust removal systems;
•Systems of distribution by compressed air;
•Pneumatic mail;
•Suction systems.



Coils:

For series **168.1** valves class **"F"** coils **(155°C)** are available encapsulated in thermoplastic containing 30% glass fiber (types: ZB, YB).
Class **"H"** coils **(180°C)** are also available encapsulated in thermoplastic containing 40% glass fiber (type: ZH).
All the coils are for continuous service, 100% E.D.
The rated voltage tolerance is:
±10% for A.C. power supply and
+10% -5% for D.C.
The "Z" and "Y" coils can be used on a.c. with frequency of 50/60Hz (dualfrequency).
The "Z" coils have Faston terminals for **DIN 43650A** connectors with protection to **IP65**.
The "Y" coil has terminals with 2 x 1,000 mm cables with protection to **IP67.**

Installation:

The valves can be mounted in any position without jeopardising their operation. It is however advisable to install them with the coil in a vertical position above the body.

Approvals:

• For the coils:

ZB 09	115V/50-60Hz, 220-230V/50-60Hz, 240V/50-60Hz
ZH 09	24V/50-60Hz
ZH 12	12V DC, 24V DC
YB 09	220-230V/50-60Hz

• For the coil:

ZB 09	220-230V/50-60Hz, 240V/50-60Hz
YB 09	220-230V/50-60Hz

• UL Recognized Comp. coils mark:

ZB 09	24V/60Hz, 110-120V/60Hz, 208-240V/60Hz
YB 09	24V/60Hz, 110-120V/60Hz, 208-240V/60Hz

Parker Hannifin S.p.A.
via E. Fermi, 5
20060 Gessate (Milano) - Italy

Tel: +45 63 12 83 00 | Email: ps@hymatik.com | www.hymatik.com | Hvidkaervej 27a, DK-5250 Odense SV, Denmark

MATERIALS

• Valve body:	CW617N UNI EN 12165:98 brass stamping
• Seals:	NBR (Buna N)
• Enclosing tube:	AISI 304 stainless steel
• Plunger:	AISI 430F stainless steel
• Spring:	AISI 302 stainless steel
• Shading ring:	Copper

ELECTRICAL FEATURES

Coil type [ ]		Power [W]		Insulat. class
A.C.(~)	D.C.(=)	A.C.(~)	D.C.(=)	
ZB 09	ZB 12	9	12	F
YB 09	YB 12	9	12	F
ZH 09	ZH 12	9	12	H
ZH 14	ZH 16	14	16	H

SPECIFICATION

Fittings Ø G	Valve type	Nominal orifice Ø	Flow coefficient Kv	Minimum pressure	Max differential pressure (M.O.P.D.)		Coil type	Weight	Notes
["]	[ ]	[mm]	[m³/h]	[bar]	in A.C.(~) [bar]	in D.C.(=) [bar]	[ ]	[Kg]	[ ]
3/8	168.1 I	13	2,0	0,5	16	16	Z - Y	0,550	1
1/2	168.1 A	13	2,5	0,5	16	16	Z - Y	0,580	1
3/4	168.1 C	20	7,0	0,5	16	16	Z - Y	1,020	1
1	168.1 D	25	8,0	0,5	16	16	Z - Y	1,080	1

Note: 1) NP (nominal pressure): 25 bar.

DIMENSIONS

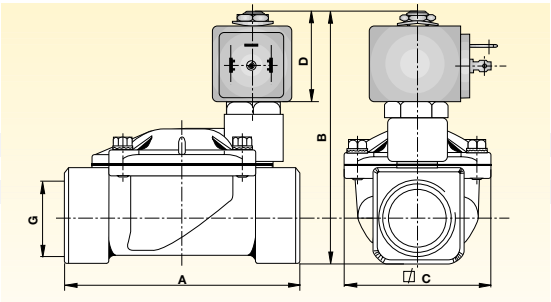

Fittings Ø G	A	B	C	D
["]	[mm]	[mm]	[mm]	[mm]
3/8	69,0	93,5	40,0	37,5
1/2	72,0	95,5	40,0	37,5
3/4	100,0	101,0	65,0	37,5
1	104,0	106,5	65,0	37,5

ORDER CODE

PM	168.1		N			[V]	[Hz] / d.c.

VALVE BODY

SERIES

FITTINGS

I	3/8"
A	1/2"
C	3/4"
D	1"

SEAL

N	NBR (Buna N)

Coil type	24 V 50/60 Hz	115V 50/60 Hz	220-230 V 50/60 Hz	240 V 50/60 Hz	12 V d.c.	24 V d.c.
ZB 09	●	●	●	●		
ZH 09	●					
ZB 12					●	●
ZH 12					●	●
YB 09	●	●	●			
YB 12					●	●
ZH 14	●	●	●			
ZH 16					●	●

Coil type	24 V / 60 Hz	110-120 V / 60 Hz	208-240 V / 60 Hz
ZB 09 UL	●	●	●
YB 09 UL	●	●	●

Note: Valve supplied with body (PM) and coil separate. Connector to be ordered separately.

Parker Hannifin S.p.A.
via E. Fermi, 5
20060 Gessate (Milano) - Italy

Tel: +45 63 12 83 00 | Email: ps@hymatik.com | www.hymatik.com | Hvidkaervej 27a, DK-5250 Odense SV, Denmark

Solenoid Valves for Automation

2/2 way - Normally open - Diaphragm pilot operated

Fittings: G = 3/8" - 1"

Series **169.1**

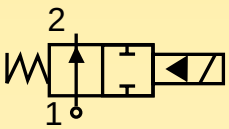

N.O.
Normally open

Coil energised - closed
Coil de-energised - open

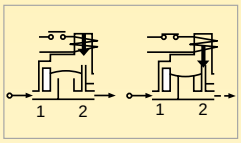

General description:

PARKER series **169.1** solenoid valves are diaphragm pilot operated and therefore require a minimum differential pressure to operate.
They are used for **air** applications, including high operating frequencies. The diaphragm is made of plastic with a fabric reinforcement.
The valves of the series **169.1** are **normally open**.

Temperatures:

The working temperature for media is:

maximum	**+90°C**
minimum	**-10°C**

The maximum ambient temperature is:

•with class **"F"** coils	**+50°C**
•with class **"H"** coils	**+80°C**

Applications:

Series **169.1** solenoid valves are ideal for air applications where high flow rates with high operating frequencies are required.
Some typical application examples are:
- Air compressors;
- Dust removal systems;
- Compressed air distribution systems;
- Pneumatic mail;
- Suction systems.

Coils:

For series **169.1** valves class **"F"** coils **(155°C)** are available encapsulated in thermoplastic containing 30% glass fiber (types: ZB, YB).
Class **"H"** coils **(180°C)** are also available encapsulated in thermoplastic containing 40% glass fiber (type: ZH).
All the coils are for continuous service, 100% E.D.
The rated voltage tolerance is:
±10% for AC. power supply and
+10% -5% for D.C.
The "Z" and "Y" coils can be used on a.c. with frequency of 50/60Hz (dualfrequency).
The "Z" coils have Faston terminals for **DIN 43650A** connectors with protection to **IP65.**
The "Y" coil has terminals with 2 x 1,000 mm cables with protection to **IP67**.

Installation:

The valves can be mounted in any position without jeopardising their operation. It is however advisable to install them with the coil in a vertical position above the body.

Approvals:

- For the coils:

ZB 14	115V/50-60Hz, 220-230V/50-60Hz
ZH 14	24V/50-60Hz
ZH 16	24V DC, 12V DC
YB 14	220-230V/50-60Hz

- For the coil:

ZB 14	220-230V/50-60Hz



Series **169.1**

Parker Hannifin S.p.A.
via E. Fermi, 5
20060 Gessate (Milano) - Italy

MATERIALS

• Valve body:	CW617N UNI EN 12165:98 brass stamping
• Seals:	NBR (Buna N)
• Enclosing tube:	AISI 304 stainless steel
• Plunger:	AISI 430F stainless steel
• Spring:	AISI 302 stainless steel
• Shading ring:	Copper

ELECTRICAL FEATURES

Coil type [ ]		Power [W]		Insulat. class
A.C.(~)	D.C.(=)	A.C.(~)	D.C.(=)	
ZB 14	ZB 16	14	16	F
YB 14	YB 16	14	16	F
ZH 14	ZH 16	14	16	H

SPECIFICATION

Fittings Ø G	Valve type	Nominal orifice Ø	Flow coefficient Kv	Minimum pressure	Max differential pressure (M.O.P.D.)		Coil type	Weight	Notes
["]	[ ]	[mm]	[m³/h]	[bar]	in A.C.(~) [bar]	in D.C.(=) [bar]	[ ]	[Kg]	[ ]
3/8	169.1 I	13	2,0	0,5	16	16	Z - Y	0,560	1
1/2	169.1 A	13	2,5	0,5	16	16	Z - Y	0,590	1
3/4	169.1 C	20	7,0	0,5	16	16	Z - Y	1,250	1
1	169.1 D	25	8,0	0,5	16	16	Z - Y	1,110	1

Note: 1) NP (nominal pressure): 25 bar.

DIMENSIONS

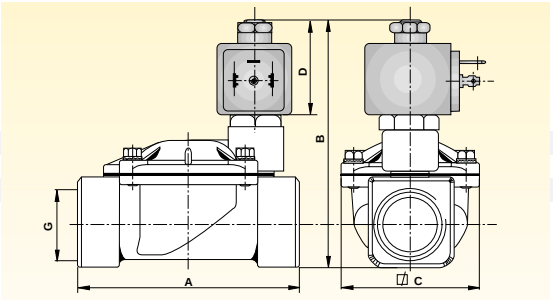

Fittings Ø G	A	B	C	D
["]	[mm]	[mm]	[mm]	[mm]
3/8	69,0	101,0	40,0	43
1/2	72,0	103,0	40,0	43
3/4	100,0	108,5	65,0	43
1	104,0	114,0	65,0	43

ORDER CODE

PM	169.1		N			[V]		[Hz] / d.c.	
VALVE BODY		FITTINGS							
		I 3/8"							
		A 1/2"							
		C 3/4"							
		D 1"							
	SERIES		SEAL						
			N NBR (Buna N)						

Coil type		24 V 50/60 Hz	115V 50/60 Hz	220-230 V 50/60 Hz	240 V 50/60 Hz	12 V d.c.	24 V d.c.
ZB	14	●	●	●	●		
ZB	16					●	●
YB	14	●	●	●			
YB	16					●	●
ZH	14	●	●	●			
ZH	16					●	●

Note: Valve supplied with body (PM) and coil separate. Connector to be ordered separately.

Parker Hannifin S.p.A.
via E. Fermi, 5
20060 Gessate (Milano) - Italy

Tel: +45 63 12 83 00 | Email: ps@hymatik.com | www.hymatik.com | Hvidkaervej 27a, DK-5250 Odense SV, Denmark

Solenoid Valves for Automation

2/2 way - Normally Closed - Diaphragm pilot operated

Fittings: G = 3/8" - 1/2"

Series **173**

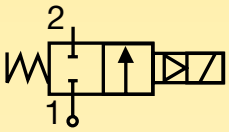

N.C.
Normally closed

Coil energised - open
Coil de-energised - closed

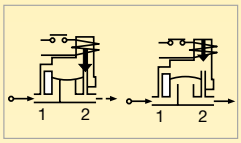

General description:

PARKER series **173** solenoid valves are diaphragm pilot operated and therefore require a minimum differential pressure to operate.
They are used for general applications with media such as **water, air, light oils (2°E) and inert gases**, provided they are compatible with the construction materials used.
Series **173** valves are **normally closed**. They are compact, with high flow rates and low power consumption.

Temperatures:

The working temperature for media is:
maximum **+90°C**
minimum **-10°C**
The maximum ambient temperature is:
+50°C

Application:

Series **173** solenoid valves are ideal for the automatic control of media in a wide range of applications such as:
- Computerised controls;
- Cooling systems for machine tools;
- Dry-cleaning machines;
- Autoclaves;
- Compressed air systems;
- Car wash systems;
- Hygiene-health systems;
- Tanning industry.

Coils:

Series **173** valves are available with class **"F"** coils **(155°C)** with thermoplastic insulation, reinforced with 30% glassofibre.
All the coils are for continuous service, 100% E.D.
The rated voltage tolerance is:
±10% for A.C. power supply and
+10% -5% for D.C.
The "W" coil can be used on a.c. with frequency of 50/60Hz (dualfrequency) and has Faston terminals for **DIN 43650B** connectors with protection to **IP65**.

Installation:

The valves can be mounted in any position without jeopardising their operation. It is however advisable to install them with the coil in a vertical position above the body.

Approvals:

- For the coil:
WB 4,5 115V/50-60Hz, 220-230V/50-60Hz

- For the coil:
WB 4,5 115V/50-60Hz, 220-230V/50-60Hz

- UL Recognized Comp. coils mark:
WB 4,5 24V/60Hz, 110-120V/60Hz, 208-240V/60Hz



Series **173**

Parker Hannifin S.p.A.
via E. Fermi, 5
20060 Gessate (Milano) - Italy

for: water - air - light oils (2°E) - inert gases

MATERIALS

• Valve body:	CW617N UNI EN 12165:98 brass stamping
• Seals:	NBR (Buna N)
• Enclosing tube:	CW614N UNI EN 12164:98
• Plunger:	AISI 430F stainless steel
• Spring:	AISI 302 stainless steel
• Shading ring:	Copper

ELECTRICAL FEATURES

Coil type [ ]		Power [W]		Insulat. class
A.C.(~)	D.C.(=)	A.C.(~)	D.C.(=)	
WB 4,5	WB 5,0	4,5	5,0	F

SPECIFICATION

Fittings Ø G	Valve type	Nominal orifice Ø	Flow coefficient Kv	Minimum pressure	Max differential pressure (M.O.P.D.)		Coil type	Weight	Notes
["]	[ ]	[mm]	[m³/h]	[bar]	in A.C.(~) [bar]	in D.C.(=) [bar]	[ ]	[Kg]	[ ]
3/8	173 I	13	3,00	0,35	15	15	W	0,435	1
1/2	173 A	13	3,50	0,35	15	15	W	0,410	1

Note: 1) NP (nominal pressure): 25 bar.

DIMENSIONS

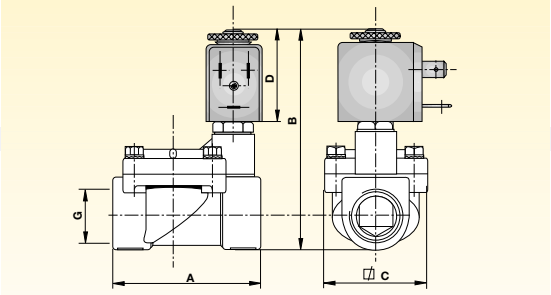

Fittings Ø G	A	B	C	D
["]	[mm]	[mm]	[mm]	[mm]
3/8	60	86	40	36
1/2	60	86	40	36

ORDER CODE

PM	173		N			[V]	[Hz] / d.c.

VALVE BODY

FITTINGS

I	3/8"
A	1/2"

SERIES

SEAL

N	NBR (Buna N)

Coil type	24 V 50/60 Hz	115V 50/60 Hz	220-230 V 50/60 Hz	240 V 50/60 Hz	12 V d.c.	24 V d.c.
WB 4,5	●	●	●	●		
WB 5,0					●	●

Coil type	24 V / 60 Hz	110-120 V / 60 Hz	208-240 V / 60 Hz
WB 4,5 UL	●	●	●

Note: Valve supplied with body (PM) and coil separate. Connector to be ordered separately.

Parker Hannifin S.p.A.
via E. Fermi, 5
20060 Gessate (Milano) - Italy

Solenoid Valves for Automation

2/2 way - Normally Closed - Direct operated

Fittings: G = 1/8" - 1/4"

Series **N74**

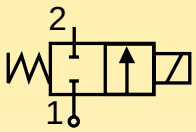

N.C.
Normally closed

Coil energised - open
Coil de-energised - closed

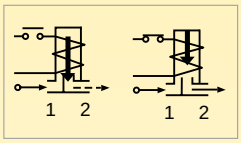

General description:

PARKER series **N74** solenoid valves have direct action and therefore do not require a minimum differential pressure to operate.
They are used for general applications, when small overall dimensions and low consumption are required, with media such as **water, air, light oils (2°E) and inert gases**, provided they are compatible with the construction materials used.
Series **N74** valves are **normally closed**.
For large orders, valves are available on request with **manual operator.**

Temperatures:

The working temperature for media is:
maximum **+140°C**
minimum **-10°C**
The maximum ambient temperature is:
+50°C

Application:

Series **N74** solenoid valves are ideal for the automatic control of media with low flow rates.
Some typical application examples:
•Espresso coffee machines;
•Sterilisers;
•Compressed air systems;
•Welding machines;
•Wood-working machines;
•Electrical medical equipment;
•Shoe-manufacturing machines.

Coils:

For series **N74** valves the WB class **"F"** coil **(155°C)**, encapsulated in thermoplastic containing 30% glass fiber, is used.
The coil is for continuous service, 100% E.D.
The rated voltage tolerance is:
±10% for A.C. power supply and
+10% -5% for D.C.
The "W" coil can be used on a.c. with frequency of 50/60Hz (dualfrequency) and has Faston terminals for **DIN 43650B** connectors with protection to **IP65**.

Installation:

The valves can be mounted in any position without jeopardising their operation. It is however advisable to install them with the coil in a vertical position above the body.
The series **N74** valves with the code .4 are fitted with M4 x 7 mounting holes on the valve body with centre distance 18 x 18 mm.

Approvals:

• For the coil:
WB 4,5 115V/50-60Hz, 220-230V/50-60Hz

• For the coil:
WB 4,5 115V/50-60Hz, 220-230V/50-60Hz

• UL Recognized Comp. coils mark:
WB 4,5 24V/60Hz, 110-120V/60Hz, 208-240V/60Hz



Series **N74**

Parker Hannifin S.p.A.
via E. Fermi, 5
20060 Gessate (Milano) - Italy

for: water - air - light oils (2°E) - inert gases

MATERIALS

• Valve body:	CW617N UNI EN 12165:98 brass stamping
• Seals:	Viton
• Enclosing tube:	AISI 303 stainless steel
• Plunger:	AISI 430F stainless steel
• Spring:	AISI 302 stainless steel
• Shading ring:	Copper

ELECTRICAL FEATURES

Coil type [ ]		Power [W]		Insulat. class
A.C.(~)	D.C.(=)	A.C.(~)	D.C.(=)	
WB 4,5	WB 5,0	4,5	5,0	F

SPECIFICATION

Fittings Ø G	Valve type	Nominal orifice Ø	Flow coefficient Kv	Minimum pressure	Max differential pressure (M.O.P.D.)		Coil type	Weight	Notes
["]	[ ]	[mm]	[m³/h]	[bar]	in A.C.(~) [bar]	in D.C.(=) [bar]	[ ]	[Kg]	[ ]
1/8	N74.4 A	1,5	0,06	0	20	15	W	0,14	1
1/8	N74.4 B	2	0,11	0	15	10	W	0,14	1
1/8	N74.4 F	2,5	0,14	0	10	6	W	0,14	1
1/4	N74.4 W	2,5	0,14	0	10	6	W	0,15	1

Note: 1) NP (nominal pressure): 25 bar.

DIMENSIONS

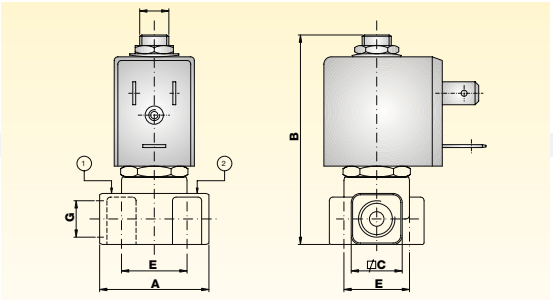

Fittings Ø G	A	B	C	D
["]	[mm]	[mm]	[mm]	[mm]
1/8	30	56	14	36
1/4	30	58,5	18	36

ORDER CODE

VE	N74.4		V			[V]	[Hz] / d.c.	

COMPLETE VALVE

SERIES

FITTINGS

A	1/8"
B	1/8"
F	1/8 "
W	1/4"

SEAL

V	Viton

Coil type	24 V 50/60 Hz	115V 50/60 Hz	220-230 V 50/60 Hz	240 V 50/60 Hz	12 V d.c.	24 V d.c.
WB 4,5	●	●	●	●		
WB 5,0					●	●

Coil type	24 V / 60 Hz	110-120 V / 60 Hz	208-240 V / 60 Hz
WB 4,5 UL	●	●	●

Note: Valve supplied with coil in a multipack. Connector to be ordered separately.

Parker Hannifin S.p.A.
via E. Fermi, 5
20060 Gessate (Milano) - Italy

Solenoid Valves for Automation

3/2 way - Normally Closed - Direct operated

Fittings: G = 1/8”

Series **N79**

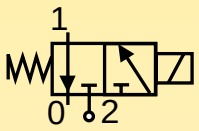

N.C.
Normally closed

Coil energised - open
Coil de-energised - closed

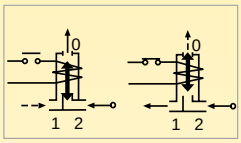

General description:

PARKER series **N79** solenoid valves have direct action and are used in systems for pressurisation and automatic discharge of media when small overall dimensions and low power consumption are required. They are suitable for general applications with media such as **water, air, light oils (2°E) and inert gases**, provided they are compatible with the construction materials used.
Series **N79** valves are **normally closed**.
For large orders, valves are available on request with **manual operator.**

Temperatures:

The working temperature for media is:

maximum	**+140°C**
minimum	**-10°C**

The maximum ambient temperature is:
+50°C

Application:

Series **N79** solenoid valves are ideal for automatic control of media where low flow rates are required.
Some typical application examples:
- Exhaust gas analysers;
- Sterilisers;
- Scientific equipment;
- Electrical medical equipment;
- Automatic dispensers;
- Pilot valves.

Coils:

For series **N79** valves the WB class **“F”** coil **(155°C)**, encapsulated in thermoplastic containing 30% glass fiber, is used.
The coil is for continuous service, 100% E.D.
The rated voltage tolerance is:
±10% for A.C. power supply and
+10% -5% for D.C.
The “W” coil can be used on a.c. with frequency of 50/60Hz (dualfrequency) and has Faston terminals for **DIN 43650B** connector with protection to **IP65**.

Installation:

The valves can be mounted in any position without jeopardising their operation. It is however advisable to install them with the coil in a vertical position above the body.

Approvals:

• Coil certification:
WB 4,5 115V/50-60Hz, 220-230V/50-60Hz

• For the coil:
WB 4,5 115V/50-60Hz, 220-230V/50-60Hz

• UL Recognized Comp. coils mark:
WB 4,5 24V/60Hz, 110-120V/60Hz, 208-240V/60Hz



Parker Hannifin S.p.A.
via E. Fermi, 5
20060 Gessate (Milano) - Italy

for: water - air - light oils (2°E) - inert gases

MATERIALS

• Valve body:	CW617N UNI EN 12165:98 brass stamping
• Seals:	Viton
• Enclosing tube:	AISI 303 stainless steel
• Plunger:	AISI 430F stainless steel
• Spring:	AISI 302 stainless steel
• Shading ring:	Copper

ELECTRICAL FEATURES

Coil type [ ]		Power [W]		Insulat. class
A.C.(~)	D.C.(=)	A.C.(~)	D.C.(=)	
WB 4,5	WB 5,0	4,5	5,0	F

SPECIFICATION

Fittings Ø G	Valve type	Nominal orifice Ø	Flow coefficient Kv	Minimum pressure	Max differential pressure (M.O.P.D.)		Coil type	Weight	Notes
["]	[ ]	[mm]	[m³/h]	[bar]	in A.C.(~) [bar]	in D.C.(=) [bar]	[ ]	[Kg]	[ ]
1/8	N79.4 I	1,2 (1,6)*	0,04	0	10	10	W	0,14	1
1/8	N79.4 A	1,5 (1,6)*	0,05	0	7	7	W	0,14	1

Note: 1) NP (nominal pressure): 25 bar. (2) * Discharge diameter.

DIMENSIONS

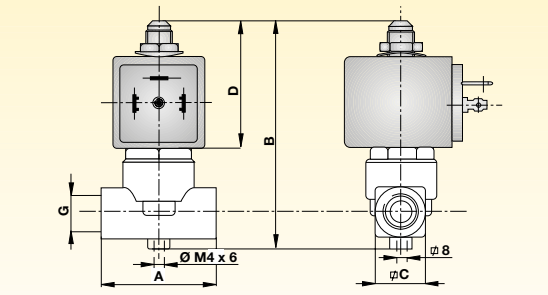

Fittings Ø G	A	B	C	D
["]	[mm]	[mm]	[mm]	[mm]
1/8	30	56	14	35

ORDER CODE

VE	N79.4		V			[V]	[Hz] / d.c.	

COMPLETE VALVE

FITTINGS

I	1/8"
A	1/8"

SERIES

SEAL

V	Viton

Coil type		24 V 50/60 Hz	115V 50/60 Hz	220-230 V 50/60 Hz	240 V 50/60 Hz	12 V d.c.	24 V d.c.
WB	4,5	●	●	●	●		
WB	5,0					●	●

Coil type	24 V / 60 Hz	110-120 V / 60 Hz	208-240 V / 60 Hz
WB 4,5 UL	●	●	●

Note: Valve supplied with coil in a multipack. Connector to be ordered separately.

Parker Hannifin S.p.A.
via E. Fermi, 5
20060 Gessate (Milano) - Italy

Solenoid Valves for Automation

Parker Hannifin S.p.A.
via E. Fermi, 5
20060 Gessate (Milano) - Italy

Solenoid Valves for Steam and High Temperatures



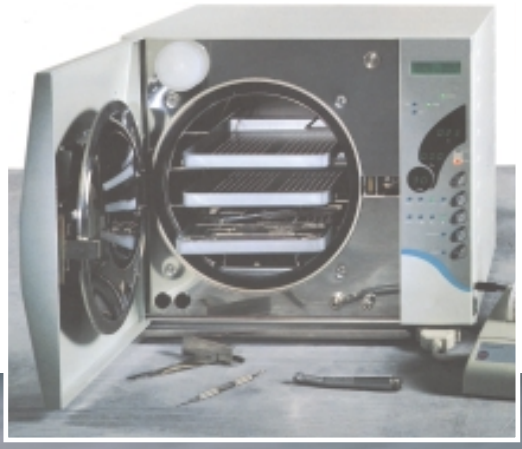



Parker Hannifin S.p.A.
via E. Fermi, 5
20060 Gessate (Milano) - Italy

Solenoid valves for steam and high temperatures

Contents

			pages
Series	**126**	**NC**	74-75
Series	**128**	**NC**	76-77
Series	**133...H**	**NC**	78-79
Series	**135**	**NC**	80-81
Series	**140.2**	**NC**	82-83
Series	**156.2**	**NC**	84-85
Series	**158**	**NC**	86-87
Series	**161.4**	**NC**	88-89

NC = normally closed

Parker Hannifin S.p.A.
via E. Fermi, 5
20060 Gessate (Milano) - Italy

FITTINGS / TYPE	G = 1/8”		G = 1/4”		G=3/8”		G=1/2”		G=3/4”		G=1 ”		G=1 1/4”		G=1 1/2”		G=2”	
	a.c. [bar]	d.c. [bar]	a.c. [bar]	d.c. [bar]	a.c. [bar]	d.c. [bar]	a.c. [bar]	d.c. [bar]	a.c. [bar]	d.c. [bar]	a.c. [bar]	d.c. [bar]	a.c. [bar]	d.c. [bar]	a.c. [bar]	d.c. [bar]	a.c. [bar]	d.c. [bar]
Series **126**			10	6÷10														
Series **128**	series 128: 32 mm flange: a.c. 10 bar - d.c 10 bar																	
Series **133...H**					20	20	20	20	20	20	20	20	10	10	10	10	10	10
Series **135**					10	10	10	10	10	10	10	10						
Series **140.2**	20÷30																	
Series **156.2**					16		16		14		14							
Series **158**			10	4÷10														
Series **161.4**	10	10	10	10														

The numbers in [bar] in the table indicate **the M.O.P.D. values (maximum operating differential pressure).**
The columns refer to the type of fittings and the type of power supply, the rows refer to the valve series.

Parker Hannifin S.p.A.
via E. Fermi, 5
20060 Gessate (Milano) - Italy

Tel: +45 63 12 83 00 | Email: ps@hymatik.com | www.hymatik.com | Hvidkaervej 27a, DK-5250 Odense SV, Denmark

Solenoid valves for steam and high temperatures

2/2 way - Normally Closed - Direct Operated — Fittings: G = 1/4”

Series **126**

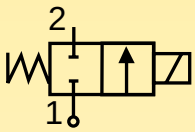

N.C.
Normally closed
Coil energised - open
Coil de-energised - closed

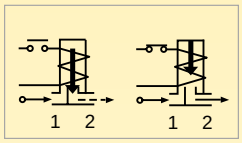

General description:

PARKER series **126** solenoid valves are direct operated and do not require a minimum differential pressure to operate.
They are used **with steam and superheated water**.
Series **126** valves are **normally closed**.

Temperatures:

The working temperature for media is: **+140°C** for models with an ethylene propylene seal (EPDM) and **+180°C** for the version with a Teflon seal (PTFE).
The minimum temperature of media is **-10°C**
The maximum ambient temperature is:
with class **“F”** coils **+50°C**
with class **“H”** coils **+80°C**

Application:

Series **126** solenoid valves are ideal for automatic control of steam and superheated water in applications such as:
- Steam generators;
- Sterilisers;
- Autoclaves;
- Espresso coffee machines;
- Drink dispensers;
- Furnaces;
- Ironing boards and presses.

Coils:

For series **126** valves class **“F”** coils **(155°C)** are available encapsulated in thermoplastic containing 30% glass fiber (types ZB, YB) and class **“H”** coils **(180°C)** are available encapsulated in thermoplastic containing 40% of glass fiber (type ZH).
All the coils are for continuous service, 100% E.D.
The rated voltage tolerance is:
±10% for A.C. power supply and
+10% -5% for D.C.
The “Z” and “Y” coils can be used on a.c. with a frequency of 50/60 Hz (dualfrequency).
The “Z” coils have Faston terminals for **DIN 43650A** connectors with protection to **IP65**.
The “Y” coil has terminals with 2 x 1,000 mm cables with protection to **IP67**.

Installation:

The valves can be mounted in any position without jeopardising their operation. It is however advisable to install them with the coil in a vertical position above the body.
The valve body has a M4 x 8 mounting hole.

Approvals:

• For the coils:
ZB 09 115V/50-60Hz, 220-230V/50-60Hz, 240V/50-60Hz
ZH 09 24V/50-60Hz
ZH 12 12V DC, 24V DC
YB 09 220-230V/50-60Hz

• For the coils:
ZB 09 220-230V/50-60Hz, 240V/50-60Hz
YB 09 220-230V/50-60Hz

• UL Recognized Comp. coils mark:
ZB 09 24V/60Hz, 110-120V/60Hz, 208-240V/60Hz
YB 09 24V/60Hz, 110-120V/60Hz, 208-240V/60Hz



Parker Hannifin S.p.A.
via E. Fermi, 5
20060 Gessate (Milano) - Italy

Tel: +45 63 12 83 00 | Email: ps@hymatik.com | www.hymatik.com | Hvidkaervej 27a, DK-5250 Odense SV, Denmark

for: steam - superheated water

MATERIALS

• Valve body:	CW617N UNI EN 12165:98 brass stamping
• Seals:	EPDM - PTFE (Teflon)
• Enclosing tube:	AISI 304 stainless steel
• Plunger:	AISI 430F stainless steel
• Spring:	AISI 302 stainless steel
• Shading ring:	Copper
• Fitted sit:	AISI 304 stainless steel

ELECTRICAL FEATURES

Coil type [ ]		Power [W]		Insulat. class
A.C.(~)	D.C.(=)	A.C.(~)	D.C.(=)	
ZB 09	ZB 12	9	12	F
YB 09	YB 12	9	12	F
ZH 09	ZH 12	9	12	F
ZH 14	ZH 16	14	16	H

SPECIFICATION

Fittings Ø G	Valve type	Nominal orifice Ø	Flow coefficient Kv	Minimum pressure	Max differential pressure (M.O.P.D.)		Coil type	Weight	Notes
["]	[ ]	[mm]	[m³/h]	[bar]	in A.C.(~) [bar]	in D.C.(=) [bar]	[ ]	[Kg]	[ ]
1/4	126 YH	3,0	0,25	0	10	6	YB - ZB	0,33	1 - 2
1/4	126 YT	3,0	0,25	0	10	10	ZH	0,33	2

Note: 1) Maximum pressure for steam 4 bar (140°C). 2) NP (nominal pressure): 25 bar.

DIMENSIONS

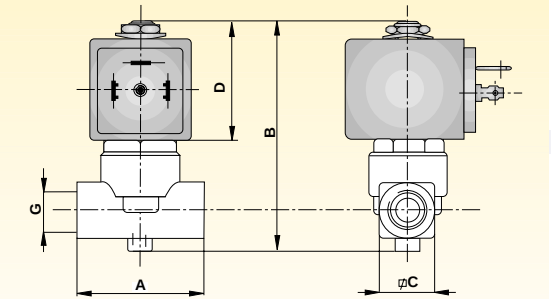

Fittings Ø G	A	B	C	D
["]	[mm]	[mm]	[mm]	[mm]
1/4	40	75,5	18	37,5

ORDER CODE

PM	126	Y				[V]	[Hz]/d.c.

VALVE BODY

FITTINGS

Y	1/4"

SERIES

SEAL

H	EPDM
T	PTFE (Teflon)

Coil type	24 V 50/60 Hz	115V 50/60 Hz	220-230 V 50/60 Hz	240 V 50/60 Hz	12 V d.c.	24 V d.c.
ZB 09	●	●	●	●		
ZH 09	●					
ZB 12					●	●
ZH 12					●	●
YB 09	●	●	●			
YB 12					●	●
ZH 14	●	●	●			
ZH 16					●	●

Coil type	24 V / 60 Hz	110-120 V / 60 Hz	208-240 V / 60 Hz
ZB 09 UL	●	●	●
YB 09 UL	●	●	●

Note: Valve supplied with body (PM) and coil separate. Connectors to be ordered separately.

Parker Hannifin S.p.A.
via E. Fermi, 5
20060 Gessate (Milano) - Italy

Solenoid valves for steam and high temperatures

3/2 way - Normally Closed - Direct Operated — Flange fittings

Series **128**

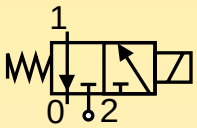

N.C.
Normally closed
Coil energised - open
Coil de-energised - closed

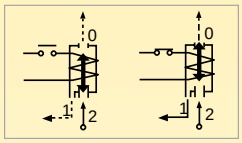

General description:

PARKER series **128** solenoid valves are direct operated and do not require a minimum differential pressure to operate.
They are used for **superheated water**.
Series **128** valves are **normally closed**.
The inlet and outlet fittings are situated on the mounting flange and enclosing tube.

Temperatures:

The working temperature for media is:

maximum	**+140°C**
minimum	**-30°C** (Ruby)
minimum	**-10°C** (FKM)

The maximum ambient temperature is:

- with class **"F"** coils **+50°C**
- with class **"H"** coils **+80°C**

Application:

Series **128** solenoid valves are ideal for automatic control of superheated water for dispensing espresso coffee.
Models are available with various seals and fitting configurations for maximum flexibility of application and installation.
Some typical application examples:

- Espresso coffee machines, for bars;
- Espresso coffee machines, for the home;
- Automatic dispensers.

Coils:

For series **128** valves class **"F"** coils **(155°C)** are available encapsulated in thermoplastic containing 30% glass fiber, (ZB, YB types). Class **"H"** coils **(180°C)** are available encapsulated in thermoplastic containing 40% of glass fiber (ZH type).
All the coils are for continuous service, 100% E.D.
The rated voltage tolerance is:
±10% for A.C. power supply and
+10% -5% for D.C.
The "Z" and "Y" coils can be used on a.c. with a frequency of 50/60 Hz (dualfrequency).
The "Z" coils have Faston terminals for **DIN 43650A** connectors with protection to **IP65**.
The "Y" coil has terminals with 2 x 1,000 mm cables with protection to **IP67**.

Installation:

The valves can be mounted in any position without jeopardising their operation. It is however advisable to install them with the coil in a vertical position above the body.

Approvals:

- For the coils:

ZB 09 115V/50-60Hz, 220-230V/50-60Hz, 240V/50-60Hz
ZH 09 24V/50-60Hz
ZH 12 12VDC, 24VDC
YB 09 220-230V/50-60Hz

- For the coils:

ZB 09 220-230V/50-60Hz,240V/50-60Hz
YB 09 220-230V/50-60Hz

- UL Recognized Comp. coils mark:

ZB 09 24V/60Hz, 110-120V/60Hz, 208-240V/60Hz
YB 09 24V/60Hz, 110-120V/60Hz, 208-240V/60Hz



Series **128**

Parker Hannifin S.p.A.
via E. Fermi, 5
20060 Gessate (Milano) - Italy

for: superheated water

MATERIALS

• Valve body:	CW617N UNI EN 12165:98 brass stamping
• Seals:	Ruby - Viton
• Enclosing tube:	AISI 304 stainless steel
• Plunger:	AISI 430F stainless steel
• Spring:	AISI 302 stainless steel
• Shading ring:	Copper
• Fitted sit:	AISI 304 stainless steel

ELECTRICAL FEATURES

Coil type [ ]		Power [W]		Insulat. class
A.C.(~)	D.C.(=)	A.C.(~)	D.C.(=)	
ZB 09	ZB 12	9	12	F
YB 09	YB 12	9	12	F
ZH 09	ZH 12	9	12	H
ZH 14	ZH 16	14	16	H

SPECIFICATION

Fittings Ø G	Valve type	Nominal orifice Ø	Flow coefficient Kv	Minimum pressure	Max differential pressure (M.O.P.D.)		Coil type	Weight	Notes
["]	[ ]	[mm]	[m³/h]	[bar]	in A.C.(~) [bar]	in D.C.(=) [bar]	[ ]	[Kg]	[ ]
-	128 I	1,3 - (2,5)*	0,070	0	10	10	Z - Y	0,310	1 - 2
-	128 G	1,3 - (2,5)*	0,070	0	10	10	Z - Y	0,310	1 - 2
-	128 I-UL	1,3 - (2,5)*	0,070	0	10	10	Z - UL	0,310	1 - 2
-	128 G-UL	1,3 - (2,5)*	0,070	0	10	10	Z - UL	0,310	1 - 2

Note: 1) NP (nominal pressure): 25 bar.
2) Maximum static pressure 14.5 bar (for Viton sealing, maximum static pressure: 12 bar). (*) Diameter of the discharge.

DIMENSIONS

drg. 1

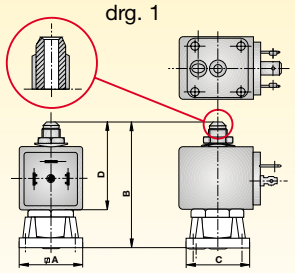

drg. 2

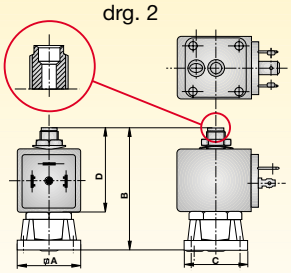

TYPE	A	B	C	D
["]	[mm]	[mm]	[mm]	[mm]
128 I	32	66	32	45,5
128 G*	32	63,5	32	43

*drg. 2

ORDER CODE

PM | **128** | | | | | [V] | [Hz]/d.c.

VALVE BODY

SERIES

DISCHARGE FITTINGS

I	conical
G	cylindrical

SEAL

R	Ruby
V	Viton

Coil type	24 V 50/60 Hz	115V 50/60 Hz	220-230 V 50/60 Hz	240 V 50/60 Hz	12 V d.c.	24 V d.c.
ZB 09	●	●	●	●		
ZH 09	●					
ZB 12					●	●
ZH 12					●	●
YB 09	●	●	●			
YB 12					●	●
ZH 14	●	●	●			
ZH 16					●	●

Coil type	24 V / 60 Hz	110-120 V / 60 Hz	208-240 V / 60 Hz
ZB 09 UL	●	●	●
YB 09 UL	●	●	●

Note: Valves supplied with coils in a multipack. Connectors to be ordered separately.

Parker Hannifin S.p.A.
via E. Fermi, 5
20060 Gessate (Milano) - Italy

Tel: +45 63 12 83 00 | Email: ps@hymatik.com | www.hymatik.com | Hvidkaervej 27a, DK-5250 Odense SV, Denmark

Solenoid valves for steam and high temperatures

2/2 way - Normally Closed - Diaphragm pilot operated **Fittings: G = 3/8" - 2"**

Series **133 ... H**

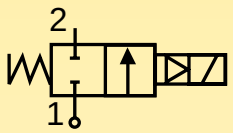

N.C.
Normally closed
Coil energised - open
Coil de-energised - closed

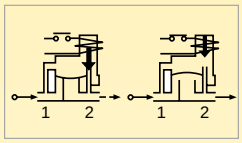

General description:

PARKER series **133H** solenoid valves are diaphragm pilot operated and require a minimum differential pressure to operate. They are used for **steam and superheated water** where high flow rates are required. Series **133H** valves are **normally closed**.

Temperatures:

The working temperature for media is:

maximum	**+140°C**
minimum	**-10°C**

The maximum ambient temperature is:

- with coils in class **"F"** **+50°C**
- with coils in class **"H"** **+80°C**

Application:

Series **133 H** solenoid valves are ideal for the automatic control of high temperature water and steam.
Some typical application examples:

- Steam generators;
- Sterilisation systems;
- Industrial washing machines;
- Washing systems;
- Furnaces;
- Boiling systems;
- Autoclaves.



Coils:

For series **133H** valves class **"F"** coils **(155°C)** are available encapsulated in thermoplastic containing 30% glass fiber (types ZB, YB) and class **"H"** coils **(180°C)** are available encapsulated in thermoplastic containing 40% of glass fiber (ZH type).
All the coils are for continuous service, 100% E.D.
The rated voltage tolerance is:
±10% for A.C. power supply and
+10% -5% for D.C.
The "Z" and "Y" coils can be used on a.c. with a frequency of 50/60 Hz (dualfrequency).
The "Z" coils have Faston terminals for **DIN 43650A** connectors with protection to **IP65**.
The "Y" coil has terminals with 2 x 1,000 mm cables with protection to **IP67**.

Installation:

The valves can be mounted in any position without jeopardising their operation. It is however advisable to install them with the coil in a vertical position above the body.

Approvals:

- For the coils:

ZB 09	115V/50-60Hz, 220-230V/50-60Hz, 240V/50-60Hz
ZH 09	24V/50-60Hz
ZH 12	12V DC, 24V DC
YB 09	220-230V/50-60Hz

- For the coils:

ZB 09	220-230V/50-60Hz, 240V/50-60Hz
YB 09	220-230V/50-60Hz

- UL Recognized Comp. coils mark:

ZB 09	24V/60Hz, 110-120V/60Hz, 208-240V/60Hz
YB 09	24V/60Hz, 110-120V/60Hz, 208-240V/60Hz

Parker Hannifin S.p.A.
via E. Fermi, 5
20060 Gessate (Milano) - Italy

Tel: +45 63 12 83 00 | Email: ps@hymatik.com | www.hymatik.com | Hvidkaervej 27a, DK-5250 Odense SV, Denmark

for: steam - superheated water

MATERIALS

• Valve body:	CW617N UNI EN 12165:98 brass stamping
• Seals:	EPDM
• Enclosing tube:	AISI 304 stainless steel
• Plunger:	AISI 430F stainless steel
• Spring:	AISI 302 stainless steel
• Shading ring:	Copper

ELECTRICAL FEATURES

Coil type [ ]		Power [W]		Insulat. class
A.C.(~)	D.C.(=)	A.C.(~)	D.C.(=)	
ZB 09	ZB 12	9	12	F
YB 09	YB 12	9	12	F
ZH 09	ZH 12	9	12	H
ZH 14	ZH 16	14	16	H

SPECIFICATION

Fittings Ø G	Valve type	Nominal orifice Ø	Flow coefficient Kv	Minimum pressure	Max differential pressure (M.O.P.D.)		Coil type	Weight	Notes
["]	[ ]	[mm]	[m³/h]	[bar]	in A.C.(~) [bar]	in D.C.(=) [bar]	[ ]	[Kg]	[ ]
3/8	133 I	13	3,00	0,1	20	20	Z - Y	0,550	1 - 2
1/2	133 A	13	3,00	0,1	20	20	Z - Y	0,580	1 - 2
3/4	133 C	20	8,40	0,1	20	20	Z - Y	1,020	1 - 2
1	133 D	25	9,60	0,1	20	20	Z - Y	1,080	1 - 2
1 1/4	133.2 E	35	25,20	0,1	10	10	Z - Y	3,150	1 - 2
1 1/2	133.2 F	40	30,00	0,1	10	10	Z - Y	2,900	1 - 2
2	133 G	50	37,20	0,1	10	10	Z - Y	4,300	1 - 2

Note: 1) NP (nominal pressure): 25 bar. 2) Maximum pressure for steam: 4 bar (140°C).

DIMENSIONS

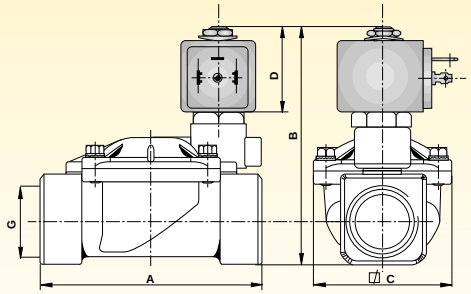

Fittings Ø G	A	B	C	D
["]	[mm]	[mm]	[mm]	[mm]
3/8	69	92,5	40	37,5
1/2	72	94,5	40	37,5
3/4	100	100,0	65	37,5
1	104	105,5	65	37,5
1 1/4	145	127,0	102	37,5
1 1/2	145	127,0	102	37,5
2	173	141,0	118	37,5

ORDER CODE

PM	133		H			[V]	[Hz]/d.c.

VALVE BODY

SERIES

FITTINGS

I	3/8"
A	1/2"
C	3/4"
D	1"
• 2 E	1 1/4"
• 2 F	1 1/2"
G	2"

SEAL

H	EPDM

Coil type	24 V 50/60 Hz	115V 50/60 Hz	220-230 V 50/60 Hz	240 V 50/60 Hz	12 V d.c.	24 V d.c.
ZB 09	●	●	●	●		
ZH 09	●					
ZB 12					●	●
ZH 12					●	●
YB 09	●	●	●			
YB 12					●	●
ZH 14	●	●	●			
ZH 16					●	●

Coil type	24 V / 60 Hz	110-120 V / 60 Hz	208-240 V / 60 Hz
ZB 09 UL	●	●	●
YB 09 UL	●	●	●

Note: Valve supplied with body (PM) and coil separate. Connectors to be ordered separately.

Parker Hannifin S.p.A.
via E. Fermi, 5
20060 Gessate (Milano) - Italy

Solenoid valves for steam and high temperatures

2/2 way - Normally Closed - Diaphragm pilot operated **Fittings: G = 3/8" - 1"**

Series **135**

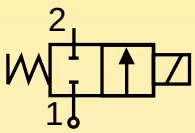

N.C.
Normally closed
Coil energised - open
Coil de-energised - closed

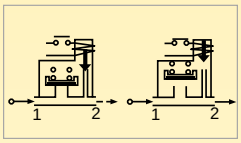

General description:

PARKER series **135** solenoid valves are diaphragm pilot operated and therefore require a minimum differential pressure to operate.
They are used for **steam and superheated water**.
Electrical components are insulated from the moving parts in contact with the media and therefore series **135** valves are particularly suitable for demanding applications.
Series **135** valves are **normally closed**.

Temperatures:

The working temperature for media is:
maximum **+180°C**
minimum **-30°C**
The maximum ambient temperature is:
+80°C

Coils:

For series **135** valves class **"F"** coils **(155°C)** are available encapsulated in thermoplastic containing 40% of glass fiber (types ZH).
All the coils are for continuous service, 100% E.D.
The rated voltage tolerance is:
±10% for A.C. power supply and
+10% -5%. for D.C.
The "Z" coil can be used on a.c. with a frequency of 50/60 Hz (dual frequency) and has Faston terminals for **DIN 43650A** connectors with protection to **IP65**.

Application:

Series **135** solenoid valves are ideal for automatic control of steam and superheated water in a wide range of applications such as those listed below.

- Dry-cleaning systems;
- Steam generators;
- Laundry systems;
- Sterilisers;
- Autoclaves;
- Plant food industry;
- Steam presses;
- Drying systems;
- Catering systems.

Installation:

The valves can be mounted in any position without jeopardising their operation. It is however advisable to install them with the coil in a vertical position above the body.



for: steam - superheated water

MATERIALS

• Valve body:	CW617N UNI EN 12165:98 brass stamping
• Seals:	PTFE (Teflon)
• Enclosing tube:	AISI 304 stainless steel
• Plunger:	AISI 430F stainless steel
• Spring:	AISI 302 stainless steel
• Shading ring:	Copper
• Fitted sit:	AISI 304 stainless steel

ELECTRICAL FEATURES

Coil type [ ]		Power [W]		Insulat. class
A.C.(~)	D.C.(=)	A.C.(~)	D.C.(=)	
ZH 14	ZH 16	14	16	H

SPECIFICATION

Fittings Ø G	Valve type	Nominal orifice Ø	Flow coefficient Kv	Minimum pressure	Max differential pressure (M.O.P.D.)		Coil type	Weight	Notes
["]	[ ]	[mm]	[m³/h]	[bar]	in A.C.(~) [bar]	in D.C.(=) [bar]	[ ]	[Kg]	[ ]
3/8	135 I	16	4,7	0,5	10	10	Z	1,150	1
1/2	135 A	16	4,7	0,5	10	10	Z	1,000	1
3/4	135 C	27	11,6	0,5	10	10	Z	3,500	1
1	135 D	27	11,6	0,5	10	10	Z	3,200	1

Note: 1) NP (nominal pressure): 25 bar.

DIMENSIONS

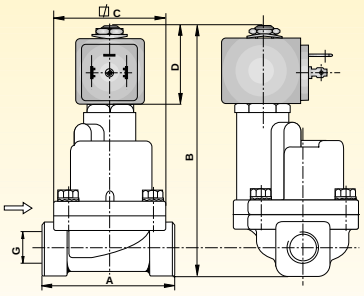

Fittings Ø G	A	B	C	D
["]	[mm]	[mm]	[mm]	[mm]
3/8	67	127	58	65,5
1/2	67	127	58	65,5
3/4	98,5	177	82	96
1	98,5	177	82	96

ORDER CODE

PM	135		T			[V]	[Hz]/d.c.

VALVE BODY

SERIES

FITTINGS

I	3/8"
A	1/2"
C	3/4"
D	1"

SEAL

T	PTFE (Teflon)

Coil type	24 V 50/60 Hz	115V 50/60 Hz	220-230 V 50/60 Hz	240 V 50/60 Hz	12 V d.c.	24 V d.c.
ZH 14	●	●	●			
ZH 16						●

Note: Valve supplied with body(PM) and coil separate. Connectors to be ordered separately.

Parker Hannifin S.p.A.
via E. Fermi, 5
20060 Gessate (Milano) - Italy

Solenoid valves for steam and high temperatures

2/2 way - Normally Closed - Direct Operated | **Fittings: G = 1/8”**

Series **140.2**

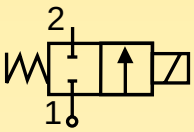

N.C.
Normally closed
Coil energised - open
Coil de-energised - closed

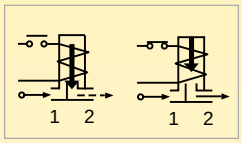

General description:

PARKER series **140.2** solenoid valves are direct operated and do not require a minimum differential pressure to operate.
They are used for general applications with media such as **steam and superheated water**.
Series **140.2** valves are **normally closed**.

Temperatures:

The working temperature for media is:

maximum	**+140°C**
minimum	**-30°C**

The maximum ambient temperature is:

with class **“F”** coils	**+50°C**
with class **“H”** coils	**+80°C**

Application:

Series **140.2** solenoid valves are particularly suitable for small flow rates of steam or superheated water.
Some typical application examples:
- Espresso coffee machines;
- Automatic dispensers;
- Sterilisers;
- Autoclaves.

Coils:

For series **140.2** valves class **“F”** coils **(155°C)** are available encapsulated in thermoplastic containing 30% glass fiber (types: ZB, YB) and class **“H”** coils **(180°C)** series are available encapsulated in thermoplastic material containing 40% of glass fiber (type ZH).
All the coils are for continuous service, 100% E.D.
The rated voltage tolerance is:
±10% for A.C. power supply and
+10% -5%. for D.C.
The “Z” and “Y” coils can be used on a.c. with a frequency of 50/60 Hz (dualfrequency).
The “Z” coils have Faston terminals for **DIN 43650A** connectors with protection to **IP65**.
The “Y” coil has terminals with 2 x 1,000 mm cables with protection to **IP67**.

Installation:

The valves can be mounted in any position without jeopardising their operation. It is however advisable to install them with the coil in a vertical position above the body.

Approvals:

- For the coils:

ZB 09 115V/50-60Hz, 220-230V/50-60Hz, 240V/50-60Hz
ZH 09 24V/50-60Hz
YB 09 220-230V/50-60Hz

- For the coils:

ZB 09 220-230V/50-60Hz, 240V/50-60Hz
YB 09 220-230V/50-60Hz

- UL Recognized Comp. coils mark:

ZB 09 24V/60Hz, 110-120V/60Hz, 208-240V/60Hz
YB 09 24V/60Hz, 110-120V/60Hz, 208-240V/60Hz



Parker Hannifin S.p.A.
via E. Fermi, 5
20060 Gessate (Milano) - Italy

for: steam - superheated water

MATERIALS

• Valve body:	CW617N UNI EN 12165:98 brass stamping
• Seals:	Ruby - EPDM
• Enclosing tube:	AISI 304 stainless steel
• Plunger:	AISI 430F stainless steel
• Spring:	AISI 302 stainless steel
• Shading ring:	Copper
• Fitted sit:	AISI 304 stainless steel

ELECTRICAL FEATURES

Coil type [ ]		Power [W]		Insulat. class
A.C.(~)	D.C.(=)	A.C.(~)	D.C.(=)	
ZB 09	-	9	-	F
YB 09	-	9	-	F
ZH 09	-	9	-	H
ZH 14	-	14	-	H

SPECIFICATION

Fittings Ø G	Valve type	Nominal orifice Ø	Flow coefficient Kv	Minimum pressure	Max differential pressure (M.O.P.D.)		Coil type	Weight	Notes
["]	[ ]	[mm]	[m³/h]	[bar]	in A.C.(~) [bar]	in D.C.(=) [bar]	[ ]	[Kg]	[ ]
1/8	140.2 HH	2,5	0,19	0	20	-	Z - Y	0,320	1
1/8	140.2 IR	2,5	0,19	0	10	-	Z - Y	0,320	1

Note: 1) NP (nominal pressure): 64 bar.

DIMENSIONS

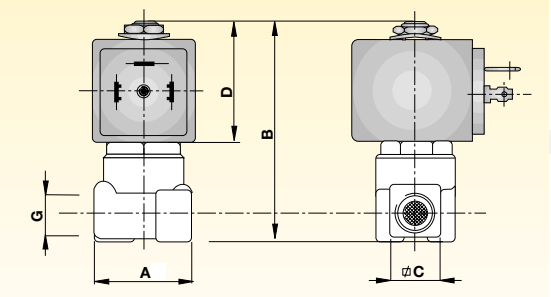

Fittings Ø G	A	B	C	D
["]	[mm]	[mm]	[mm]	[mm]
1/8	30	68	14	37,5

ORDER CODE

PM	140.2				[V]	[Hz]/d.c.
VALVE BODY	SERIES	SEAL				
		HH	EPDM			
		IR	Ruby			

Coil type	24 V 50/60 Hz	115V 50/60 Hz	220-230 V 50/60 Hz	240 V 50/60 Hz	12 V d.c.	24 V d.c.
ZB 09	●	●	●	●		
YB 09	●	●	●			
ZH 09	●					
ZH 14	●	●	●			

Coil type	24 V / 60 Hz	110-120 V / 60 Hz	208-240 V / 60 Hz
ZB 09 UL	●	●	●
YB 09 UL	●	●	●

Note: Valve supplied with body (PM) and coil separate. Connectors to be ordered separately.

Parker Hannifin S.p.A.
via E. Fermi, 5
20060 Gessate (Milano) - Italy

Tel: +45 63 12 83 00 | Email: ps@hymatik.com | www.hymatik.com | Hvidkaervej 27a, DK-5250 Odense SV, Denmark

Solenoid valves for steam and high temperatures

2/2 way - Normally Closed - Diaphragm pilot operated **Fittings: G = 3/8" - 1"**

Series **156.2**

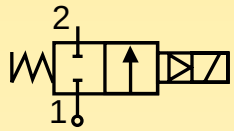

N.C.
Normally closed
Coil energised - open
Coil de-energised - closed

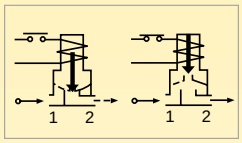

General description:

PARKER series **156.2** solenoid valves are diaphragm pilot operated and require a minimum differential pressure to operate.
They are used for general applications with media such as **steam and superheated water**.
Series **156.2** valves are **normally closed** .

Temperatures:

The working temperature for media is:

maximum	**+160°C**
minimum	**-30°C**

The maximum ambient temperature is:

with class coils **"F"**	**+50°C**
with class coils **"H"**	**+80°C**

Application:

Series **156.2** solenoid valves are ideal for automatic control of steam and superheated water in a wide range of applications such as:

- Sterilisers;
- Ironing machines;
- Hospital equipment;
- Tanning plants;
- Tobacco plants.

Coils:

For series **156.2** valves class **"F"** coils **(155°C)** are available encapsulated in thermoplastic containing 30% glass fiber (types: ZB, YB) and class **"H"** coils **(180°C)** are available encapsulated in thermoplastic containing 40% glass fiber (type ZH).
All the coils are for continuous service, 100% E.D.
The rated voltage tolerance is:
±10% for A.C. power supply
The "Z" and "Y" coils can be used on a.c. with a frequency of 50/60 Hz (dualfrequency).
The "Z" coils have Faston terminals for **DIN 43650A** connectors with protection to **IP65**.
The "Y" coil has terminals with 2 x 1,000 mm cables with protection to **IP67** .

Installation:

The valves can be mounted in any position without jeopardising their operation. It is however advisable to install them with the coil in a vertical position above the body.

Approvals:

- For the coils:

ZB 09 115V/50-60Hz, 220-230V/50-60Hz, 240V/50-60Hz
ZH 09 24V/50-60Hz
YB 09 220-230V/50-60Hz

- For the coils:

ZB 09 220-230V/50-60Hz, 240V/50-60Hz
YB 09 220-230V/50-60Hz

- UL Recognized Comp. coils mark:

ZB 09 24V/60Hz, 110-120V/60Hz, 208-240V/60Hz
YB 09 24V/60Hz, 110-120V/60Hz, 208-240V/60Hz



Parker Hannifin S.p.A.
via E. Fermi, 5
20060 Gessate (Milano) - Italy

Tel: +45 63 12 83 00 | Email: ps@hymatik.com | www.hymatik.com | Hvidkaervej 27a, DK-5250 Odense SV, Denmark

for: steam - superheated water

MATERIALS

• Valve body:	CW617N UNI EN 12165:98 brass stamping
• Seals:	Pilot of Ruby - diagram of PTFE (Teflon)
• Enclosing tube:	AISI 304 stainless steel
• Plunger:	AISI 430F stainless steel
• Spring:	AISI 302 stainless steel
• Shading ring:	Copper

ELECTRICAL FEATURES

	Coil type [ ]		Power [W]		Insulat. class
	A.C.(~)	D.C.(=)	A.C.(~)	D.C.(=)	
ZB 09	-		9	-	F
YB 09	-		9	-	F
ZH 09	-		9	-	H
ZH 14	-		14	-	H

SPECIFICATION

Fittings Ø G	Valve type	Nominal orifice Ø	Flow coefficient Kv	Minimum pressure	Max differential pressure (M.O.P.D.)		Coil type	Weight	Notes
["]	[ ]	[mm]	[m³/h]	[bar]	in A.C.(~) [bar]	in D.C.(=) [bar]	[ ]	[Kg]	[ ]
3/8	156.2 I	10	1,32	0,5	16	-	Z - Y	0,580	1 - 2
1/2	156.2 A	10	1,44	0,5	16	-	Z - Y	0,580	1 - 2
3/4	156.2 C	18	2,22	0,5	14	-	Z - Y	1,080	1 - 2
1	156.2 D	18	2,52	0,5	14	-	Z - Y	1,080	1 - 2

Note: 1) NP (nominal pressure): 25 bar. 2) Maximum pressure for steam: 6.5 bar (160 °C).

DIMENSIONS

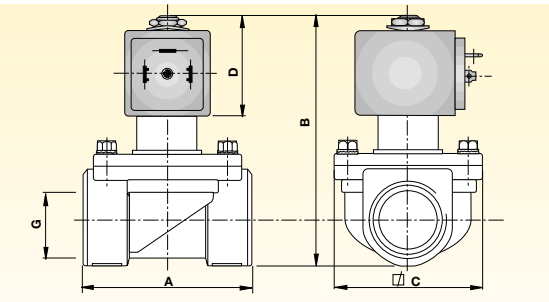

Fittings Ø G	A	B	C	D
["]	[mm]	[mm]	[mm]	[mm]
3/8	48	85,0	40	37,5
1/2	48	85,0	40	37,5
3/4	48	85,0	40	37,5
1	60	93,5	51	37,5

ORDER CODE

PM	156.2		R			[V]	[Hz]/d.c.	
VALVE BODY	SERIES	FITTINGS	SEAL					
		I 3/8"	R Ruby					
		A 1/2"						
		C 3/4"						
		D 1"						

Coil type	24 V 50/60 Hz	115V 50/60 Hz	220-230 V 50/60 Hz	240 V 50/60 Hz	12 V d.c.	24 V d.c.
ZB 09	●	●	●	●		
YB 09	●	●	●			
ZH 09	●					
ZH 14	●	●	●			

Coil type	24 V / 60 Hz	110-120 V / 60 Hz	208-240 V / 60 Hz
ZB 09 UL	●	●	●
YB 09 UL	●	●	●

Note: Valve supplied with body part (PM) and coil separate. Connectors to be ordered separately.

Parker Hannifin S.p.A.
via E. Fermi, 5
20060 Gessate (Milano) - Italy

Solenoid valves for steam and high temperatures

2/2 way - Normally Closed - Direct Operated — Fittings: G = 1/4”

Series **158**

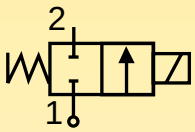

N.C.
Normally closed
Coil energised - open
Coil de-energised - closed

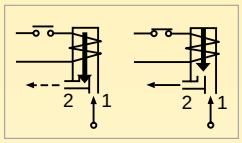

General description:

PARKER series **158** solenoid valves are direct operated and do not require a minimum differential pressure to operate.
They are used for **steam and superheated water** where the flow rate has to be altered by means of a manual regulator.
Series **158** valves are **normally closed**.

Temperatures:

The working temperature for media is: **+140°C** for the version with a seal of ethylene propylene (EPDM) and **+180°C** for the version with a seal of Teflon (PTFE).
The minimum temperature for media is **-10°C** for the two versions.
The maximum ambient temperature is:

with class **“F”** coils	**+50°C**
with class **“H”** coils	**+80°C**

Application:

Series **158** solenoid valves are ideal for the control and regulation of steam in equipment such as:
- Ironing machines;
- Steam-cleaning machines;
- Steam sprayers.

Coils:

For series **158** valves class **“F”** coils **(155°C)** are available encapsulated in thermoplastic containing 30% glass fiber (types: ZB, YB) and class **“H”** coils **(180°C)** are available encapsulated in thermoplastic containing 40% glass fiber (type ZH).
All the coils are for continuous service, 100% E.D.
The rated voltage tolerance is:
±10% for A.C. power supply and
+10% -5% for D.C.
The “Z” and “Y” coils can be used on a.c. with a frequency of 50/60 Hz (dualfrequency)
The “Z” coils have Faston terminals for **DIN 43650A** connector with protection to **IP65**.
The “Y” coil has terminals with 2 x 1,000 mm cables with protection to **IP67** .

Installation:

The valves can be mounted in any position without jeopardising their operation. It is however advisable to install them with the coil in a vertical position above the body.

Approvals:

- For the coils:

ZB 09 115V/50-60Hz, 220-230V/50-60Hz, 240V/50-60Hz
ZH 09 24V/50-60Hz
ZH 12 12V DC, 24V DC
YB 09 220-230V/50-60Hz

- For the coils:

ZB 09 220-230V/50-60Hz, 240V/50-60Hz
YB 09 220-230V/50-60Hz

- UL Recognized Comp. coils mark:

ZB 09 24V/60Hz, 110-120V/60Hz, 208-240V/60Hz
YB 09 24V/60Hz, 110-120V/60Hz, 208-240V/60Hz



Parker Hannifin S.p.A.
via E. Fermi, 5
20060 Gessate (Milano) - Italy

Tel: +45 63 12 83 00 | Email: ps@hymatik.com | www.hymatik.com | Hvidkaervej 27a, DK-5250 Odense SV, Denmark

for: steam - superheated water

MATERIALS

• Valve body:	CW617N UNI EN 12165:98 brass stamping
• Seals:	EPDM - PTFE (Teflon)
• Enclosing tube:	AISI 304 stainless steel
• Plunger:	AISI 430F stainless steel
• Spring:	AISI 302 stainless steel
• Shading ring:	Copper
• Fitted sit:	AISI 304 stainless steel

ELECTRICAL FEATURES

Coil type [ ]		Power [W]		Insulat. class
A.C.(~)	D.C.(=)	A.C.(~)	D.C.(=)	
ZB 09	ZB 12	9	12	F
YB 09	YB 12	9	12	F
ZH 09	ZH 12	9	12	H
ZH 14	ZH 16	14	16	H

SPECIFICATION

Fittings Ø G	Valve type	Nominal orifice Ø	Flow coefficient Kv	Minimum pressure	Max differential pressure (M.O.P.D.)		Coil type	Weight	Notes
["]	[ ]	[mm]	[m³/h]	[bar]	in A.C.(~) [bar]	in D.C.(=) [bar]	[ ]	[Kg]	[ ]
1/4	158 IH	3,0	0,2	0	10	4	ZB - YB	0,320	1 - 2
1/4	158 IT	3,0	0,2	0	10	10	ZH	0,400	1

Note: 1) NP (nominal pressure): 25 bar. 2) Maximum pressure for steam: 4 bar (140 °C).

DIMENSIONS

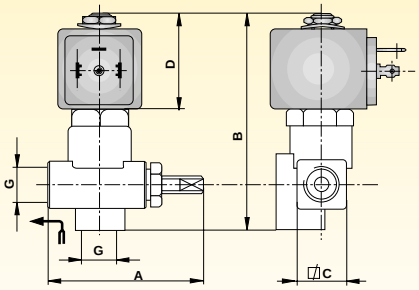

Fittings Ø G	A	B	C	D
["]	[mm]	[mm]	[mm]	[mm]
1/4	57	82	18	37,5

ORDER CODE

PM	158	I				[V]	[Hz]/d.c.

VALVE BODY

FITTINGS

I	1/4"

SERIES

SEAL

H	EPDM
T	PTFE (Teflon)

Coil type	24 V 50/60 Hz	115V 50/60 Hz	220-230 V 50/60 Hz	240 V 50/60 Hz	12 V d.c.	24 V d.c.
ZB 09	●	●	●	●		
ZH 09	●					
ZB 12					●	●
ZH 12					●	●
YB 09	●	●	●			
YB 12					●	●
ZH 14	●	●	●			
ZH 16					●	●

Coil type	24 V / 60 Hz	110-120 V / 60 Hz	208-240 V / 60 Hz
ZB 09 UL	●	●	●
YB 09 UL	●	●	●

Note: Valve supplied with body (PM) and coil separate. Connectors to be ordered separately.

Parker Hannifin S.p.A.
via E. Fermi, 5
20060 Gessate (Milano) - Italy

Solenoid valves for steam and high temperatures

2/2 way - Normally Closed - Direct Operated | **Fittings: Rp = 1/8" - 1/4"**

Series **161.4**

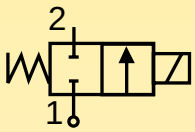

N.C.
Normally closed

Coil energised - open
Coil de-energised - closed

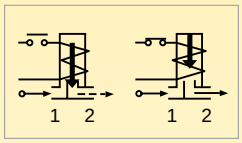

General description:

PARKER series **161.4** solenoid valves are direct operated and do not require a minimum differential pressure to operate.
They are used for general applications with media such as **steam and superheated water**.
Series **161.4** valves are **normally closed**.

Temperatures:

The working temperature for media is:

maximum	**+140°C**
minimum	**-10°C**

The maximum ambient temperature is:

with class **"F"** Coils	**+50°C**
with class **"H"** Coils	**+80°C**

Application

Series **161.4** solenoid valves are ideal for automatic control of steam and superheated water with low flow rates.
Some examples of typical applications:

- Espresso coffee machines;
- Sterilisers;
- Electrical medical equipment;
- Humidifiers.

Coils:

For series **161.4** valves class **"F"** coils **(155°C)** are available encapsulated in thermoplastic containing 30% heat-stabilised glass fiber (type KT).
All the coils are for continuous service, 100% E.D.
The rated voltage tolerance is:
±10% for A.C. power supply and
+10% -5% in D.C.
The "K" coil can be used on a.c. with a frequency of 50 Hz (single frequency) and has Faston terminals for **DIN 43650A** connectors with protection to **IP65**.

Installation:

The valves can be mounted in any position without jeopardising their operation. It is however advisable to install them with the coil in a vertical position above the body.

Approvals:

- For the coils:

KH 09	115V/50Hz 230V/50Hz.
KT 09	115V/50Hz 220-230V/50Hz.



Parker Hannifin S.p.A.
via E. Fermi, 5
20060 Gessate (Milano) - Italy

Tel: +45 63 12 83 00 | Email: ps@hymatik.com | www.hymatik.com | Hvidkaervej 27a, DK-5250 Odense SV, Denmark

for: steam - superheated water

MATERIALS

• Valve body:	CW617N UNI EN 12165:98 brass stamping
• Seals:	Viton
• Enclosing tube:	OT58 UNI 5705 pressed brass
• Plunger:	AISI 430F stainless steel
• Spring:	AISI 302 stainless steel
• Shading ring:	Copper

ELECTRICAL FEATURES

Coil type [ ]		Power [W]		Insulat. class
A.C.(~)	D.C.(=)	A.C.(~)	D.C.(=)	
KH 09	-	9	-	H
KT 09	KT 10	9	10	F

SPECIFICATION

Fittings Ø G	Valve type	Nominal orifice Ø	Flow coefficient Kv	Minimum pressure	Max differential pressure (M.O.P.D.)		Coil type	Weight	Notes
["]	[ ]	[mm]	[m³/h]	[bar]	in A.C.(~) [bar]	in D.C.(=) [bar]	[ ]	[Kg]	[ ]
1/8	161.4 A	2,2	0,120	0	10	10	K	0,20	1 - 2
1/4	161.4 E	2,2	0,120	0	10	10	K	0,22	1 - 2

Note: 1) NP (nominal pressure): 25 bar. 2) Maximum pressure for steam: 4 bar (140°C).

DIMENSIONS

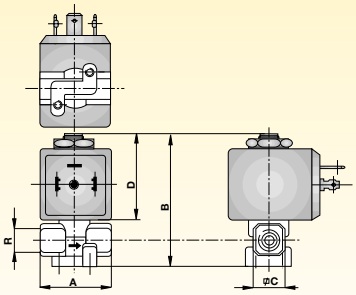

Fittings Ø Rp	A	B	C	D
["]	[mm]	[mm]	[mm]	[mm]
1/8	32	56	14	37,5
1/4	38	60	16	37,5

ORDER CODE

VE	161.4		V			[V]	[Hz]/d.c.	

COMPLETE VALVE

FITTINGS

A	1/8"
E	1/4"

SERIES

SEAL

V	Viton

Coil type	24 V 50 Hz*	115V 50 Hz*	220-230 V 50 Hz*	240 V 50 Hz*	12 V d.c.	24 V d.c.
KT 09	●	●	●	●		
KT 10					●	●
KH 09	●	●	●			

* models with 60 Hz available

Note: Valve supplied with coil in a multipack. Connectors to be ordered separately.

Parker Hannifin S.p.A.
via E. Fermi, 5
20060 Gessate (Milano) - Italy

Solenoid valves for steam and high temperatures

Parker Hannifin S.p.A.
via E. Fermi, 5
20060 Gessate (Milano) - Italy

Solenoid Valves for Heating



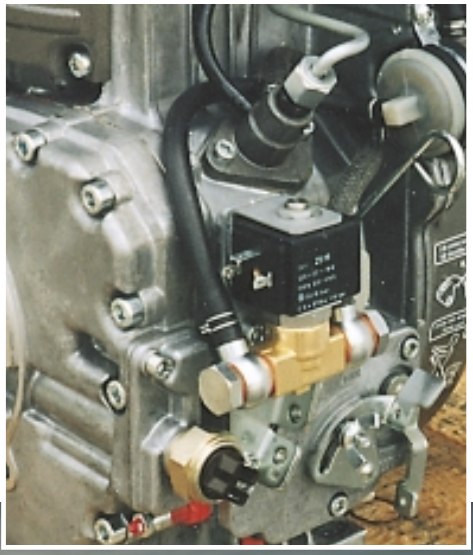



Parker Hannifin S.p.A.
via E. Fermi, 5
20060 Gessate (Milano) - Italy

Solenoid valves for heating

Contents

			pages
Series	**120.4**	**NO**	94-95
Series	**131**	**NC**	96-97
Series	**131.4**	**NC**	98-99
Series	**140**	**NC**	100-101
Series	**153**	**NC**	102-103

NO = normally open

NC = normally closed

Parker Hannifin S.p.A.
via E. Fermi, 5
20060 Gessate (Milano) - Italy

FITTINGS / TYPE	G = 1/8”		G = 1/4”		G=3/8”		G=1/2”	
	a.c. [bar]	d.c. [bar]	a.c. [bar]	d.c. [bar]	a.c. [bar]	d.c. [bar]	a.c. [bar]	d.c. [bar]
Series **120.4**	30		30					
Series **131**	15÷25	13÷22						
Series **131.4**	2	1	2	1				
Series **140**	30	17	30	12÷17				
Series **153**					2÷5	0,5÷3,5	2÷5	0,5÷3,5

The numbers in [bar] in the table indicate **the M.O.P.D. values (maximum operating differential pressure).**
The columns refer to the type of fittings and the type of power supply, the rows refer to the valve series.

Parker Hannifin S.p.A.
via E. Fermi, 5
20060 Gessate (Milano) - Italy

Tel: +45 63 12 83 00 | Email: ps@hymatik.com | www.hymatik.com | Hvidkaervej 27a, DK-5250 Odense SV, Denmark

Solenoid valves for heating

2/2 way - Normally Open - Direct Operated

Fittings: G = 1/8" - 1/4"

Series **120.4**

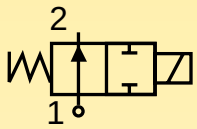

N.O.
Normally open

Coil energised - closed
Coil de-energised - open

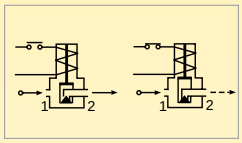

General description:

PARKER series **120.4** solenoid valves are direct operated and do not require a minimum differential pressure to operate.
They are used for general applications with media such as **fuel oils, diesel oil or naphtha up to 7°E**, provided they are compatible with the construction materials used.
Series **120.4** valves are **normally open** with inlet and outlet in line.

Temperatures:

The working temperature for media is:

maximum	**+160°C**
minimum	**-30°C**

The maximum ambient temperature is: **+60°C**

Application:

Series **120.4** solenoid valves are ideal for automatic control of fuel oils up to 7°E on pressurised burners.

Coils:

For series **120.4** valves class **"F"** coils **(155°C)** are available encapsulated in thermoplastic containing 30% glass fiber (types: ZB, YB) and class **"H"** coils **(180°C)** are available encapsulated in thermoplastic containing 40% glass fiber (type ZH).
All the coils are for continuous service, 100% E.D.
The rated voltage tolerance is:
±10% for A.C. power supply
The "Z" and "Y" coils can be used on a.c. with a frequency of 50/60 Hz (dualfrequency).
The "Z" coils have Faston terminals for **DIN 43650A** connectors with protection to **IP65**.
The "Y" coil has terminals with 2 x 1,000 mm cables with protection to **IP67** .

Installation:

The valves can be mounted in any position without jeopardising their operation. It is however advisable to install them with the coil in a vertical position above the body.

Approvals:

- For the coils:

ZB 14 115V/50-60Hz, 220-230V/50-60Hz
ZH 14 24V/50-60Hz
YB 14 220-230V/50-60Hz

- For coil:

ZB 14 220-230V/50-60Hz

- With coil:

ZH 14 220-230V/50-60Hz



Series **120.4**

Parker Hannifin S.p.A.
via E. Fermi, 5
20060 Gessate (Milano) - Italy

for: fuel oils (7°E)

MATERIALS

• Valve body:	CW617N UNI EN 12165:98 brass stamping
• Seals:	Ruby
• Enclosing tube:	AISI 304 stainless steel
• Plunger:	AISI 430F stainless steel
• Spring:	AISI 302 stainless steel
• Shading ring:	Copper
• Fitted sit:	AISI 304 stainless steel

ELECTRICAL FEATURES

Coil type [ ]		Power [W]		Insulat. class
A.C.(~)	D.C.(=)	A.C.(~)	D.C.(=)	
ZB 14	-	14	-	F
YB 14	-	14	-	F
ZH 14	-	14	-	H

SPECIFICATION

Fittings Ø G	Valve type	Nominal orifice Ø	Flow coefficient Kv	Minimum pressure	Max differential pressure (M.O.P.D.)		Coil type	Weight	Notes
["]	[ ]	[mm]	[m³/h]	[bar]	in A.C.(~) [bar]	in D.C.(=) [bar]	[ ]	[Kg]	[ ]
1/8	120.4 I	3,0	0,24	0	30	-	Z - Y	0,350	1
1/4	120.4 A	3,0	0,24	0	30	-	Z - Y	0,320	1

Note: 1) NP (nominal pressure): 64 bar.

DIMENSIONS

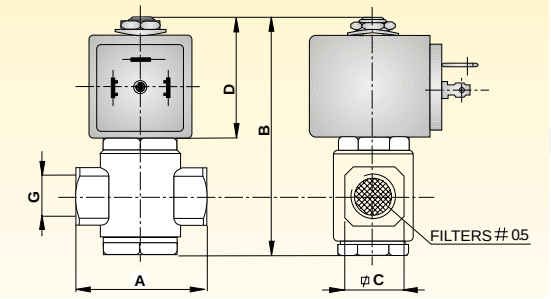

Fittings Ø G	A	B	C	D
["]	[mm]	[mm]	[mm]	[mm]
1/8	40	75	18	37,5
1/4	40	75	18	37,5

ORDER CODE

PM	120.4		R			[V]	[Hz]/cd.c.	
VALVE BODY		FITTINGS						
		I 1/8"						
		A 1/4"						
	SERIES		SEAL					
			R Ruby					

Coil type	24 V 50/60 Hz	115V 50/60 Hz	220-230 V 50/60 Hz	240 V 50/60 Hz	12 V d.c.	24 V d.c.
ZB 14	●	●	●			
YB 14	●	●	●	●		
ZH 14	●	●	●			

Note: Valve supplied with body (PM) and coil separate. Connectors to be ordered separately.

Parker Hannifin S.p.A.
via E. Fermi, 5
20060 Gessate (Milano) - Italy

Solenoid valves for heating

2/2 ways - Normally Closed - Direct Operated

Fittings: G = 1/8”

Series **131**

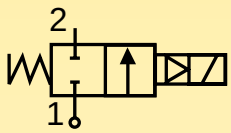

N.C.
Normally closed
Coil energised - open
Coil de-energised - closed

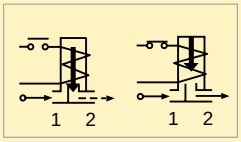

General description:

PARKER series **131** solenoid valves are direct operated and are used for general applications with media such as **fuel oils up to 2°E**.
Series **131** valves are **normally closed**.

Temperatures:

The working temperature for media is:
maximum **+90°C**
minimum **-10°C**
The maximum ambient temperature is:
with class **“F”** Coils **+50°C**
with class **“H”** Coils **+80°C**

Application:

Series **131** solenoid valves are ideal for automatic control of fuel oils up to 2°E on pressurised burners.

Coils:

For series **131** valves class **“F”** coils **(155°C)** are available encapsulated in thermoplastic containing 30% glass fiber (types: KT, XT).
All the coils are for continuous service, 100% E.D.
The rated voltage tolerance is:
±10% for A.C. power supply and
+10% -5% in D.C.
The “K” and “X” coils can be used on a.c. with a frequency of 50 Hz (single frequency).
The “K” coil has Faston terminals for **DIN 43650A** connectors protection to **IP65**.
The “X” coil has Faston terminals for plug with cables (box) with protection to **IP54**.

Installation:

The valves can be mounted in any position without jeopardising their operation. It is however advisable to install them with the coil in a vertical position above the body.

Approvals:

- For the coils:

KH 09 115V/50HZ
230V/50Hz
KT 09 115V/50HZ
220-230V/50Hz



Parker Hannifin S.p.A.
via E. Fermi, 5
20060 Gessate (Milano) - Italy

Tel: +45 63 12 83 00 | Email: ps@hymatik.com | www.hymatik.com | Hvidkaervej 27a, DK-5250 Odense SV, Denmark

for: fuel oils (2°E)

MATERIALS

• Valve body:	CW617N UNI EN 12165:98 brass stamping
• Seals:	NBR (Buna N)
• Enclosing tube:	CW614N UNI EN 12164:98 brass stamping
• Plunger:	9 SMnPb 23 UNI 5105 steel with nickel
• Spring:	AISI 302 stainless steel
• Shading ring:	Copper

ELECTRICAL FEATURES

Coil type [ ]		Power [W]		Insulat. class
A.C.(~)	D.C.(=)	A.C.(~)	D.C.(=)	
KT 09	KT10	9	10	F
XT 09	-	9	-	F
KH 09	-	9	-	H

SPECIFICATION

Fittings Ø G	Valve type	Nominal orifice Ø	Flow coefficient Kv	Minimum pressure	Max differential pressure (M.O.P.D.)		Coil type	Weight	Notes
["]	[ ]	[mm]	[m³/h]	[bar]	in A.C.(~) [bar]	in D.C.(=) [bar]	[ ]	[Kg]	[ ]
1/8	131 I	1,7	0,086	0	25	22	K - X	0,2	1
1/8	131 A	2,2	0,120	0	15	13	K - X	0,2	1

Note: 1) NP (nominal pressure): 40 bar.

DIMENSIONS

drg. 1

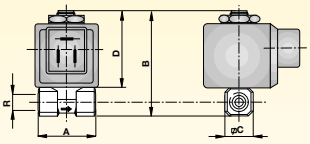

drg. 2

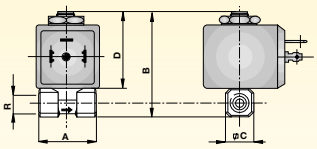

TYPE	A	B	C	D
["]	[mm]	[mm]	[mm]	[mm]
131 IN-AN*	30	53	16	37,5
131 INX	30	53	16	37,5

*drg. 2

ORDER CODE

VE	131		N			[V]	[Hz]/d.c.

COMPLETE VALVE

SERIES

FITTINGS

I	1/8"
A	1/8"

SEAL

N	NBR (Buna N)

Coil type	24 V 50 Hz	115V 50 Hz	220-230 V 50 Hz	240 V 50 Hz	12 V d.c.	24 V d.c.
KT 09	●	●	●	●		
XT 09			●	●		
KT 10					●	●
KH 09	●	●	●			

Note: Valve supplied with coil in multipack. Connectors to be ordered separately.

Parker Hannifin S.p.A.
via E. Fermi, 5
20060 Gessate (Milano) - Italy

Solenoid valves for heating

2/2 way - Normally Closed - Direct Operated

Fittings: R = 1/8" - 1/4"

Series **131.4...G**

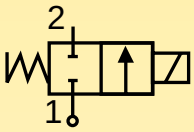

N.C.
Normally closed
Coil energised - open
Coil de-energised - closed

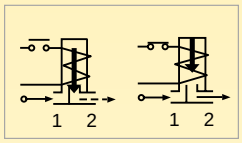

General description:

PARKER series **131.4...G** solenoid valves are direct operated and are used for general applications with **fuel gases**.
Series **131.4...G** valves are **normally closed**.

Temperatures:

The working temperature for media is:

maximum	**+90°C**
minimum	**-10°C**

The maximum ambient temperature is:

with class **"F"** Coils	**+50°C**
with class **"H"** Coils	**+80°C**

Application:

Series **131.4...G** solenoid valves are ideal for automatic and safe control of fuel gases where low flow rates are required.
Some typical application examples:
- Portable hot air generators;
- Dryers;
- Gas cookers;
- Boilers for caravans and motorhomes;
- Pilot flame control.

Coils:

For series **131.4...G** valves class **"F"** coils **(155°C)** are available encapsulated in thermoplastic containing 30% glass fiber (type KT).
All the coils are for continuous service, 100% E.D.
The rated voltage tolerance is:
±10% for A.C. power supply and **+10% - 5% in D.C.**
The "K" coil can be used on a.c. with a frequency of 50 Hz (single frequency) and has Faston terminals for **DIN 43650A** connector with protection to **IP65**.

Installation:

The valves can be mounted in any position without jeopardising their operation. It is however advisable to install them with the coil in a vertical position above the body.
The valve body has 2 mounting holes with diam. M4 x 7 and centre distance 13 x 13.

Approvals:

- For the coils:

KT 09 115V/50Hz
220-230V/50Hz
KH 09 115V/50Hz
220-230V/50Hz

- **EN 161**
For the solenoid valves with the following coil:

KT 09 24V/50Hz,
115V/50Hz,
110-120V/60Hz,
220V/50Hz,
240V/50Hz
KT 05 12V D.C.
KT 06 196-216V D.C.
KH 09 115V/50Hz
220-230V/50Hz



Parker Hannifin S.p.A.
via E. Fermi, 5
20060 Gessate (Milano) - Italy

Tel: +45 63 12 83 00 | Email: ps@hymatik.com | www.hymatik.com | Hvidkaervej 27a, DK-5250 Odense SV, Denmark

for: fuels gases

MATERIALS

• Valve body:	CW617N UNI EN 12165:98 brass stamping
• Seals:	NBR (Buna N)
• Enclosing tube:	CW614N UNI EN 12164:98 brass stamping
• Plunger:	9 SMnPb 23 UNI 5105 steel with nickel
• Spring:	AISI 302 stainless steel
• Shading ring:	Copper

ELECTRICAL FEATURES

Coil type [ ]		Power [W]		Insulat. class
A.C.(~)	D.C.(=)	A.C.(~)	D.C.(=)	
KT 09	KT 10	9	10	F
KT 05	KT 05	5	5	F
-	KT 06	-	6	F
KH 09	-	9	-	H

SPECIFICATION

Fittings Ø Rp	Valve type	Nominal orifice Ø	Flow coefficient Kv	Minimum pressure	Max differential pressure (M.O.P.D.)		Coil type	Weight	Notes
["]	[ ]	[mm]	[m³/h]	[bar]	in A.C.(~) [bar]	in D.C.(=) [bar]	[ ]	[Kg]	[ ]
1/8	131.4 C	4	0,318	0	2	1	K	0,20	1 - 2
1/4	131.4 G	4	0,318	0	2	1	K	0,22	1 - 2

Note: 1) NP (nominal pressure): 10 bar. 2) With coil KT05-KT06 (d.c.) the working pressure is reduced to 0,15 bar.

DIMENSIONS

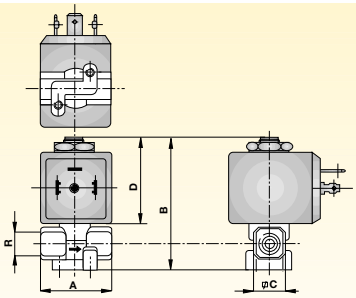

Fittings Ø Rp	A	B	C	D
["]	[mm]	[mm]	[mm]	[mm]
1/8	38	60	60	37,5
1/4	38	60	60	37,5

ORDER CODE

VE	131.4		G			[V]	[Hz]/d.c.

COMPLETE VALVE

SERIES

FITTINGS

C	1/8"
G	1/4"

SEAL

G	NBR (Buna N)

Coil type	24 V 50 Hz*	115V 50 Hz*	220-230 V 50 Hz*	240 V 50 Hz*	110-120 V 60 Hz
KT 09	●	●	●	●	●
KH 09		●	●	●	

* models with 60 Hz available

Coil type	196-216 V - DC	12 V c.c.	24 V c.c.	240 V 50 Hz
KT 06	●			
KT 05		●		●
KT 10		●	●	

Note: Valve supplied with coil in multipack. Connectors to be ordered separately.

Parker Hannifin S.p.A.
via E. Fermi, 5
20060 Gessate (Milano) - Italy

Solenoid valves for heating

2/2 way - Normally Closed - Direct Operated

Fittings: G = 1/8" - 1/4"

Series **140**

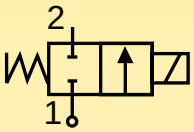

N.C.
Normally closed
Coil energised - open
Coil de-energised - closed

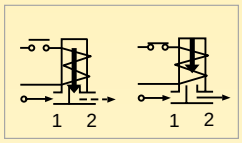

General description:

PARKER series **140** solenoid valves are direct operated and do not require a minimum differential pressure to operate.
They are used for general applications with media such as **fuel oils, diesel oil or naphtha up to 7°E**, provided they are compatible with the construction materials used.
Series **140** valves are **normally closed**.

Temperatures:

The working temperature for media is:
maximum +**140°C**
minimum **-30°C**
The maximum ambient temperature is:
with class **"F"** coils **+50°C**
with class **"H"** coils **+80°C**

Application:

Series **140** solenoid valves are ideal for automatic and safe control of fuel oils up to 7°E on pressurised burners.

Coils:

For the series **140** class **"F"**coils **(155°C)** are available encapsulated in thermoplastic material containing 30% glass fiber (types: ZB, YB), and class **"H"** coils **(180°C)** are available encapsulated in thermoplastic material containing 40% of glass fiber (type ZH).
All the coils are for continuous service, 100% E.D.
The rated voltage tolerance is:
±10% for A.C. power supply and
+10% -5% in D.C.
The "Z" and "Y" coils can be used on a.c. with a frequency of 50/60 Hz (dualfrequency).
The "Z" coils have Faston terminals for **DIN 43650A** connector with protection to **IP65**.
The "Y" coil has terminals with 2 x 1,000 mm cable and protection to **IP67**.
The "X" coils has Faston terminals for plug with cable (box) with protection to **IP54**.

Installation:

The valves can be mounted in any position without jeopardising their operation. It is however advisable to install them with the coil in a vertical position above the body.
The model **140.4** has no mounting hole.

Approvals:

• For the coils:
ZB 09 15V/50-60Hz, 220-230V/50-60Hz, 240V/50-60Hz
ZH 09 24V/50-60Hz
ZH 12 12VDC, 24VDC
YB 09 220-230V/50-60Hz

• For the coil:
ZB 09 220-230V/50-60Hz,240V/50-60Hz
YB 09 220-230V/50-60Hz

• UL Recognized Comp. coils mark:
ZB 09 24V/60Hz, 110-120V/60Hz, 208-240V/60Hz
YB 09 24V/60Hz, 110-120V/60Hz, 208-240V/60Hz



for: fuel oils (7°E)

MATERIALS

• Valve body:	CW617N UNI EN 12165:98 brass stamping
• Seals:	Ruby
• Enclosing tube:	AISI 304 stainless steel
• Plunger:	AISI 430F stainless steel
• Spring:	AISI 302 stainless steel
• Shading ring:	Copper
• Fitted sit:	AISI 304 stainless steel

ELECTRICAL FEATURES

Coil type [ ]		Power [W]		Insulat. class
A.C.(~)	D.C.(=)	A.C.(~)	D.C.(=)	
ZB 09	ZB 12	9	12	F
YB 09	YB 12	9	12	F
ZH 09	ZH 12	9	12	H
ZH 14	-	14	-	H
XP 07	-	7	-	F

SPECIFICATION

Fittings Ø G	Valve type	Nominal orifice Ø	Flow coefficient Kv	Minimum pressure	Max differential pressure (M.O.P.D.)		Coil type	Weight	Notes
["]	[ ]	[mm]	[m³/h]	[bar]	in A.C.(~) [bar]	in D.C.(=) [bar]	[ ]	[Kg]	[ ]
1/8	140 I	2,5	0,192	0	30	17	ZB - YB	0,340	1
1/4	140 C	2,5	0,192	0	30	17	ZB - YB - XP	0,330	1
1/4	140 D	3,0	0,258	0	30	12	ZB - YB	0,330	1
1/8	140.4 A	3,0	0,240	0	30	-	Z H	0,320	1
1/4	140.4 D	3,0	0,240	0	30	-	ZH	0,320	1

Note: 1) NP (nominal pressure): 64 bar.

DIMENSIONS

drg. 1

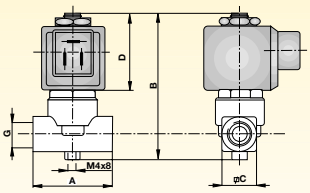

drg. 2

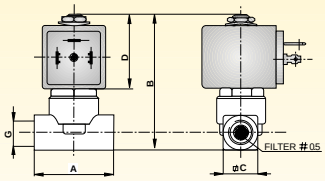

TYPE	A	B	C	D
["]	[mm]	[mm]	[mm]	[mm]
140-I-C-D*	40	75,5	18	37,5
140 CRX	40	75,5	18	37,5
140.4A-D*	40	71	18	37,5

*drg. 2

ORDER CODE

PM | **140** | | **R** | | | [V] | [Hz]/d.c.

VALVE BODY

FITTINGS

I	1/8"
C	1/4"
D	1/4"
• 4 A	1/8"
• 4 D	1/4"

SERIES

SEAL

R	Ruby

Coil type	24 V 50/60 Hz	115V 50/60 Hz	220-230 V 50/60 Hz	240 V 50/60 Hz	12 V d.c.	24 V d.c.
ZB 09	●	●	●	●		
ZH 09	●					
ZB 12					●	●
ZH 12					●	●
YB 09	●	●	●			
YB 12					●	●
ZH 14	●	●	●			

Coil type	220 V / 50 Hz
XP 07	●

Coil type	24 V / 60 Hz	110-120 V / 60 Hz	208-240 V / 60 Hz
ZB 09 UL	●	●	●
YB 09 UL	●	●	●

Note: Valve supplied with body (PM) and coil separate. Connectors to be ordered separately.

Parker Hannifin S.p.A.
via E. Fermi, 5
20060 Gessate (Milano) - Italy

Solenoid valves for heating

2/2 way - Normally Closed - Direct Operated

Fittings: G = 3/8" - 1/2"

Series **153**

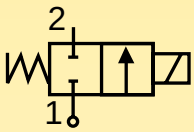

N.C.
Normally closed
Coil energised - open
Coil de-energised - closed

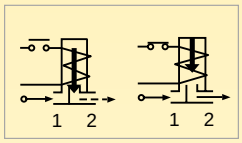

General description:

PARKER series **153** solenoid valves are direct operated and do not require a minimum differential pressure to operate.
They are used for general applications with media such as **fuel oils up to 2°E**.
Series **153** valves are **normally closed** .

Temperatures:

The working temperature for media is:

maximum	**+140°C**
minimum	**-10°C**

The maximum ambient temperature is:

with class **"F"**coils	**+50°C**
with class **"H"**coils	**+80°C**

Application:

Series **153** solenoid valves are ideal for automatic control of fuel oils up to **2°E**.
Some typical application examples:

- Heating systems;
- Diesel oil distribution systems;
- Tank level control.

Coils:

For series **153** valves class **"F" (155°C)** coils are available encapsulated in thermoplastic containing 30% glass fiber (types: ZB, YB) and class **"H"**coils **(180°C)** are available encapsulated in thermoplastic containing 40% of glass fiber (type ZH).
All the coils are for continuous service, 100% E.D.
The rated voltage tolerance is:
±10% for A.C. power supply
and **+10% -5% in D.C.**
The "Z" and "Y" coils can be used on a.c. with a frequency of 50/60 Hz (dualfrequency).
The "Z" coils have Faston terminals for **DIN 43650A** connector with protection to **IP65**.
The "Y" coil has terminals with 2 x 1,000 mm cables with protection to **IP67** .

Installation:

The valves can be mounted in any position without jeopardising their operation. It is however advisable to install them with the coil in a vertical position above the body.

Approvals:

- For the coils:

ZB 14	115V/50-60Hz, 220-230V/50-60Hz
ZH 14	24V/50-60Hz
ZH 16	12V-DC, 24V-DC
YB 14	220V/50-60Hz

- For the coil:

ZB 14	220-230V/50-60Hz



Series **153**

Parker Hannifin S.p.A.
via E. Fermi, 5
20060 Gessate (Milano) - Italy

for: fuel oils (2°E)

MATERIALS

• Valve body:	CW617N UNI EN 12165:98 brass stamping
• Seals:	Viton
• Enclosing tube:	AISI 304 stainless steel
• Plunger:	AISI 430F stainless steel
• Spring:	AISI 302 stainless steel
• Shading ring:	Copper

ELECTRICAL FEATURES

Coil type [ ]		Power [W]		Insulat. class
A.C.(~)	D.C.(=)	A.C.(~)	D.C.(=)	
ZB 14	ZB 16	14	16	F
YB 14	YB 16	14	16	F
ZH 14	ZH 16	14	16	H
KP 07	-	7	-	F

SPECIFICATION

Fittings Ø G	Valve type	Nominal orifice Ø	Flow coefficient Kv	Minimum pressure	Max differential pressure (M.O.P.D.)		Coil type	Weight	Notes
["]	[ ]	[mm]	[m³/h]	[bar]	in A.C.(~) [bar]	in D.C.(=) [bar]	[ ]	[Kg]	[ ]
3/8	153 B	5	0,612	0	2	-	K	0,390	1
1/2	153 G	5	0,612	0	2	-	K	0,350	1
3/8	153 B	5	0,612	0	5	1,5	Z - Y	0,390	1
1/2	153 G	5	0,612	0	5	1,5	Z - Y	0,350	1

Note: 1) NP (nominal pressure): 10 bar.

DIMENSIONS

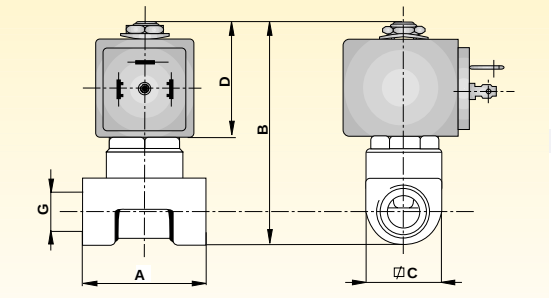

Fittings Ø G	A	B	C	D
["]	[mm]	[mm]	[mm]	[mm]
3/8	53	77,5	26	37,5
1/2	53	77,5	26	37,5

ORDER CODE

PM | **153** | | **V** | | | [V] | [Hz]/d.c.

- PM — VALVE BODY
- 153 — SERIES
- FITTINGS: B 3/8" ; G 1/2"
- SEAL: V Viton

Coil type	24 V 50/60 Hz	115V 50/60 Hz	220-230 V 50/60 Hz	240 V 50/60 Hz	12 V d.c.	24 V d.c.
ZB 14	●	●	●	●		
ZB 16					●	●
YB 14			●			
YB 16					●	●
ZH 14	●	●	●			
ZH 16					●	●

Coil type	220 V / 50 Hz
KP 07	●

Note: Valve supplied with body (PM) and coil separate. Connectors to be ordered separately.

Parker Hannifin S.p.A.
via E. Fermi, 5
20060 Gessate (Milano) - Italy

Tel: +45 63 12 83 00 | Email: ps@hymatik.com | www.hymatik.com | Hvidkaervej 27a, DK-5250 Odense SV, Denmark

Spare Parts

Diaphgram

Code	Description	Size	Models	d (mm)	Material
306061SP	Diaphragm 123 V ass. mini	3/8” 1/2”	123 IV 123 AV	47,5	FKM
306071SP	Diaphragm 123 V ass. maxi	3/4” 1”	123 CV 123 DV	73	

For instance, P/N 306061SP may be used for models 123 AV - 123 IV

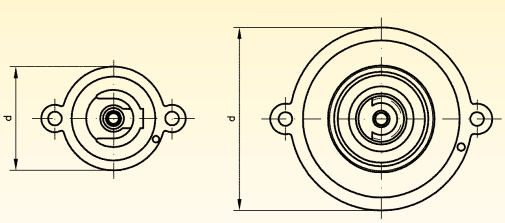

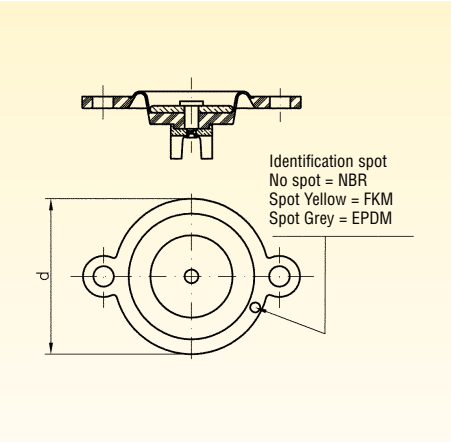

Code	Description	Material	Models 133XZ - 143XZ 7321BBYYZ - 7322BB YYZ			Size	d (mm)
			Z	X	YY		
306100SP	Diaphragm 133 N ass. mini	NBR	N	A	3T	3/8”	34
306111SP	Diaphragm 133 V ass. mini	FKM	V	I	4T	1/2”	
306110SP	Diaphragm 133 H ass. mini	EPDM	E				
306120SP	Diaphragm 133 N ass. maxi	NBR	N	C	53	3/4”	60
306131SP	Diaphragm 133 V ass. maxi	FKM	V	D	64	1”	
306130SP	Diaphragm 133 H ass. maxi	EPDM	E				
306133SP	Diaphragm 133 N ass. BIG1	NBR	N	E	88	1 1/2”	92
306138SP	Diaphragm 133 H ass. BIG1	EPDM	E	F		1 1/4”	
306140SP	Diaphragm 133 N ass. BIG2	NBR	N	G	99	2”	111
306150SP	Diaphragm 133 H ass. BIG2	EPDM	E	L	CB	2 1/2”	
306156SP	Diaphragm 133 N ass. BIG3	NBR	N	M	DC	3”	147

For instance, P/N 306100PS may be used for models 133 AN - 133 IN - 143 AN - 143 IN - 73214BBG3T... - 7321BBG4T...

Code	Description	Size	Models	d (mm)	Material
306206SP	Diaphragm 156 ass. mini	3/8” 1/2”	156.2 IR 156.2 AR	10,25	PTFE
306210SP	Diaphragm 156 ass. maxi	3/4” 1”	156.2 CR 156.2 DR	14,5	

For instance, P/N 306206SP may be used for models 156.2 AR - 156.2 IR

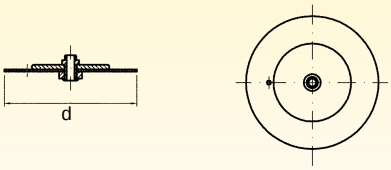

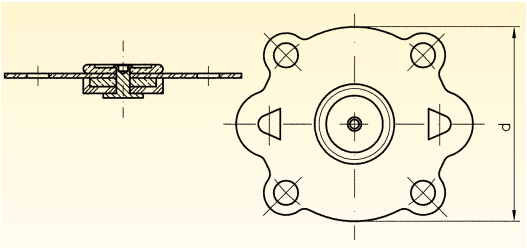

Code	Description	Size	Models	d (mm)	Material
306221SP	Diaphragm 168.1 ass. mini	3/8” 1/2”	168.1 IN 168.1 AN	47,8	NBR
306223SP	Diaphragm 168.1 ass. maxi	3/4” 1”	168.1 CN 168.1 DN	65	

For instance, P/N 306221SP may be used for models 168.1 AN - 168.1 IN - 169.1 AN - 169.1 IN

Code	Description	Size	Models	d (mm)	Material
306224SP	Diaphragm 173 N ass. mini	3/8” 1/2”	173 IN 173 AN	37	NBR

For instance, P/N 306224SP may be used for models 173 AN - 173 IN

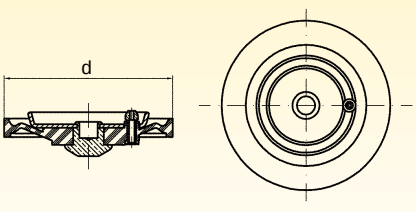

Parker Hannifin S.p.A.
via E. Fermi, 5
20060 Gessate (Milano) - Italy

Rebuild Kits

Code	Description	Diaphragm ① FKM	Diaphragm ① EPDM	Diaphragm ① NBR	OR ②	Plunger ③ FKM	Plunger ③ EPDM	Sleeve ④	Prot. ⑤	Models
430143	Rebuild kit 133 mini N			•	•	•		•	•	133 IN - 133 AN
430234	Rebuild kit 133 mini H		•		•		•	•	•	133 IH - 133 AH
430221	Rebuild kit 133 mini V	•			•	•		•	•	133 IV - 133 AV
430144	Rebuild kit 133 maxi N			•	•	•		•	•	133 CN - 133 DN
430174	Rebuild kit 133 maxi V	•			•	•		•	•	133 CV - 133 DV
430232	Rebuild kit 133 maxi H		•		•		•	•	•	133 CH - 133 DH
430145	Rebuild kit 133 BIG1 N			•	•	•		•	•	133.2 EN - 133.2 FN
430174	Rebuild kit 133 BIG2 N			•	•	•		•	•	133 GN
430228	Rebuild kit 133 BIG1 H		•		•		•	•	•	133.2 EH - 133.2 FH
430230	Rebuild kit 133 BIG2 H		•		•		•	•	•	133 GH

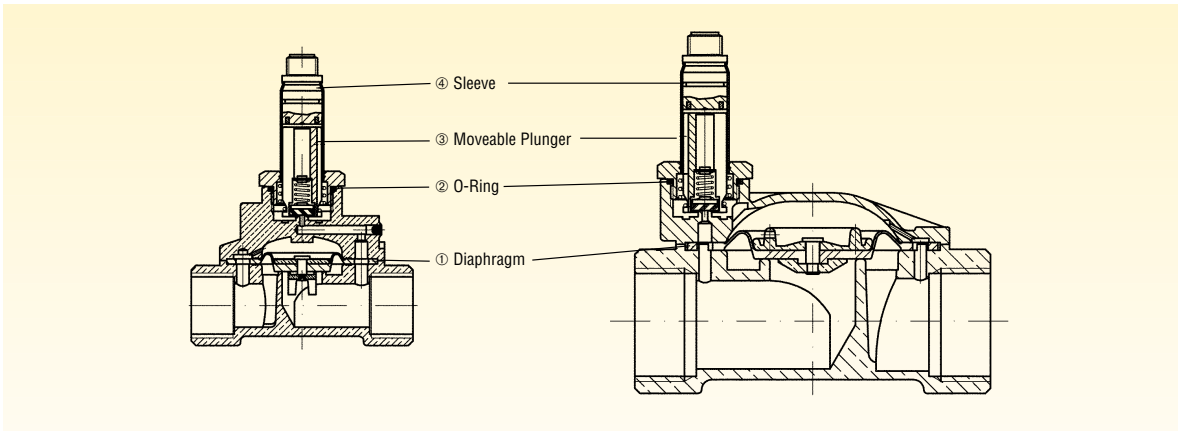

Code	Description	Diaphragm ① NBR	OR ②	Spring ③	Plunger ④	Stem ⑤	Sleeve ⑥	Prot. ⑦	Models
430212	Rebuild kit 143 mini N	•	•	•	•	•	•	•	143 IN - 143 AN
430213	Rebuild kit 143 maxi N	•	•	•	•	•	•	•	143 CN - 143 DN
430214	Rebuild kit 143 BIG1 N	•	•	•	•	•	•	•	143.2 EN - 143.2 FN
430215	Rebuild kit 143 BIG2 N	•	•	•	•	•	•	•	143 GN

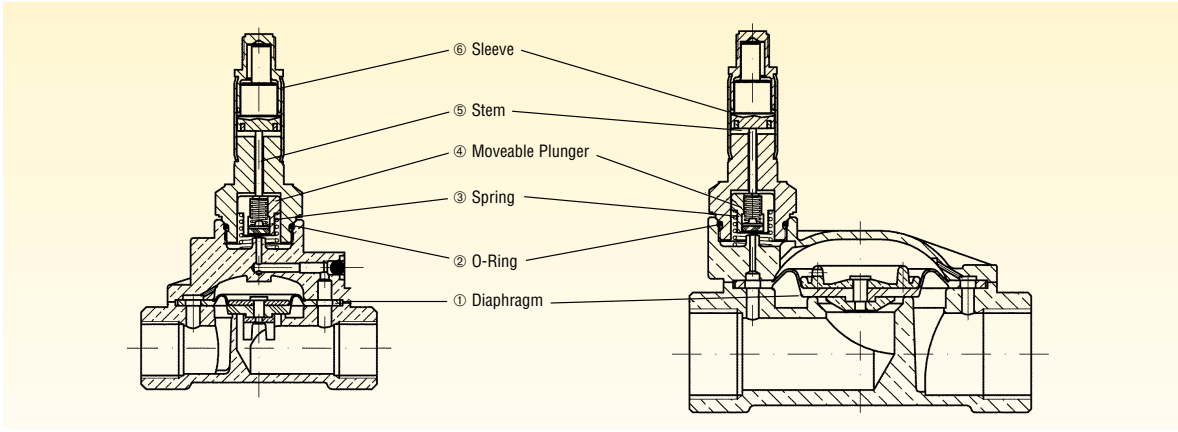

Parker Hannifin S.p.A.
via E. Fermi, 5
20060 Gessate (Milano) - Italy

Spare Parts

Rebuild Kits

Code	Description	Moveable Plunger ①	OR ②	Sleeve ③	Models
430147	Rebuild kit 135 mini - maxi	•	•	•	135 CT - 135 DT - 135 IT IT - 135 AT

Code	Description	Piston ④	N. 2 sealing listes ⑤	Belt ⑥	Pastille ⑦	OR1 ⑧	OR2 ⑨	OR3 ⑩	Models
430148	Rebuild kit Piston 135 mini	•	•	•					
430224	Seal kit 135 mini		•	•	•	•	•	•	135 IT - 135 AT
430149	Rebuild kit Piston 135 maxi	•	•	•					135 CT - 135 DT
430226	Seal kit 135 maxi		•	•	•	•	•	•	

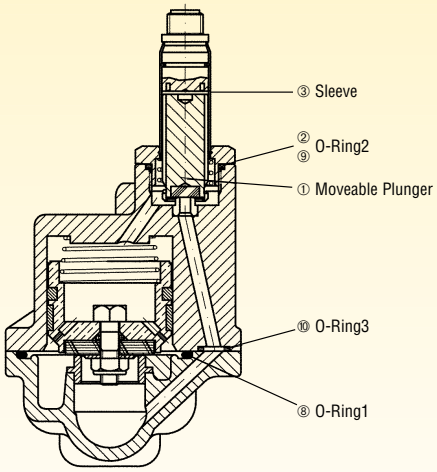

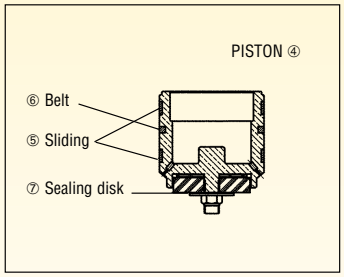

Code	Description	Diaphragm ①	OR ②	Moveable Plunger ③	Spring ④	Sleeve ⑤	Models
430141	Rebuild kit 123 mini V	•	•	•	•	•	123 AV - 123 IV
430142	Rebuild kit 123 maxi V	•		•			123 CV - 123 DV

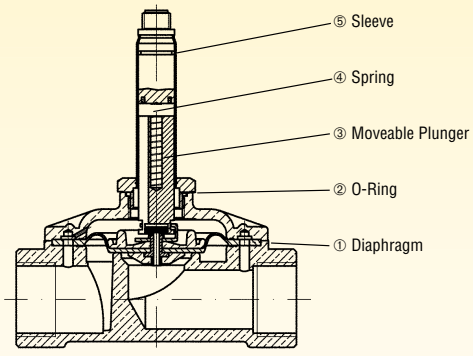

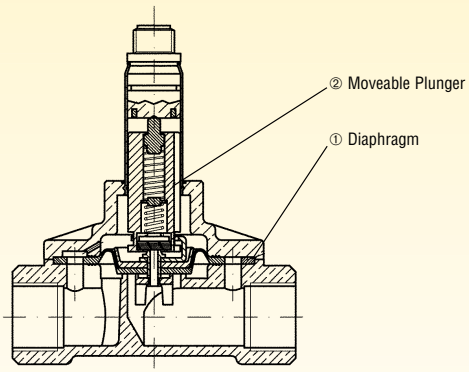

Parker Hannifin S.p.A.
via E. Fermi, 5
20060 Gessate (Milano) - Italy

Total or partial reproduction of text, drawings or photographs is prohibited unless expressly authorised in writing by Parker Hannifin S.p.A.

The text, drawings and photographs contained in this catalogue are approximate and may be changed at any time, without notice, as new technology appears.

Parker Hannifin S.p.A.
Via E. Fermi, 5
20060 GESSATE (MI) ITALY
Tel.: + 39 - 02 - 95 125.1
Fax: + 39 - 02 - 95 38 20 51

Cat.: GP / GB
08/06 - 901002