hymatik



Process to Instrument and Piping Valves Double Block and Bleed (DBB)

Monoflange and Pro-Bloc® Valves Including Low Emissions and API 6A Valves

Parker

ENGINEERING YOUR SUCCESS.

Tel: +45 63 12 83 00 | Email: ps@hymatik.com | www.hymatik.com | Hvidkaervej 27a, DK-5250 Odense SV, Denmark













Contents

Introduction **5**
General Technical Information **6**
Design 6
Materials of Construction 6
Flange Connections 7
Meeting the ISO Standard 9

Monoflange

Monoflange MF Series **12**
Overview 12
Technical Information 14
Dual Outlet Option for Vertical or Horizontal Mount 15
Gauge Mounting 15
Dual Instrument Mounting 16
Close-Coupled Techniques for Instrument Mounting 17
Ordering Information 18
Low Emissions Monoflange FEMF Series **20**
Low Emissions Head Designs 20
Technical Specifications 21
Ordering Information 22

Pro-Bloc® - Double Block and Bleed Valve (DBB)

Pro-Bloc® - Modular Single Piece DBB Valve EP Series - EEMUA 182 Design Conformance **24**
Overview 24
Technical Information 25
Standard Head Designs 28
Ordering Information 30
Pro-Bloc® - Modular Single Piece DBB Valve - Sampling and Injection Applications - ESP and EJP Series **32**
Overview 32
Ordering Information 34
Low Emissions Pro-Bloc® - Modular Single Piece DBB Valve **36**
10mm Bore - FM Series **36**
Technical Specifications 36
Low Emissions needle valve head design 38
Ordering Information 40
15 and 20 mm Bore, Bolted Bonnet Design - FE Series **42**
Technical Specifications 42
Low Emissions needle valve head design 44
Ordering Information 46
Pro-Bloc® - Three Piece DBB Valve - Floating Ball - FP Series **48**
Overview 48
Technical Specifications 48
Ordering Information 50
Pro-Bloc® - Three Piece DBB Valve 52
Pro-Bloc® - Three Piece DBB Valve - Trunnion Mount - TP Series **52**
Overview 52
Technical Specifications 52
Ordering Information 54
Pro-Bloc® - Modular Single Piece DBB Valve - API 6A **56**
API 6A Standard - Introduction **56**
API 6A Codes and Practises **56**
5K and 10K Valves - API 6A **60**
Overview 60
Technical Specifications 60
Ordering Information - 5K and 10K 63
Live Loaded 5K, 10K and 15K Valves - API 6A **64**
Overview 64
Technical Specifications 64
Ordering Information - 5K, 10K and 15K 68
Grayloc® Hub Connection - Ball - Needle Design **69**
Live Loaded - Grayloc® Hub Connection - Ball - Needle Design **70**
Live Loaded - Grayloc® Hub Connection - Needle Design **72**
Complementary Products for Complete Installation Solutions **74**

Tel: +45 63 12 83 00 | Email: ps@hymatik.com | www.hymatik.com | Hvidkaervej 27a, DK-5250 Odense SV, Denmark

Introduction

Parker's range of Process to Instrument valves has evolved and grown over the last two decades. The range has been designed to meet customer requirements for both double block and bleed and single block and bleed valves in all materials used by the industry today. It covers all the pressure requirements for ASME flange ended valves up to class 2500 and for API 6A up to 15K pressures. The bore sizes start at 10mm and are offered in increments up to 54mm (2"). Many of the valves were designed to meet specific customer needs.

One of Parker's unique advantages is the offering of an integral A-LOK® two ferrule fitting or CPI™ single ferrule fitting connections for remote mounting of an instrument or for sample and injection valves. The specification of the world renowned and universally acceptable Parker compression type connections will improve system performance, increase safety, reduce size and weight and simplify installation which ultimately reduces overall user costs.

Continuous product development may from time to time necessitate changes in the details contained in this catalogue. Parker reserves the right to make such changes at their discretion and without prior notice.

All dimensions shown in this catalogue are approximate and subject to change.

Every effort is made to provide sufficient, clear and accurate information to allow the correct selection of product from this catalogue, but ultimately it is the system designer's or user's responsibility to ensure selected product is suitable for the intended application. Should you require further information please do not hesitate to contact your local Parker support.

With thousands of distributor outlets and stores worldwide, and hundreds of Parker personnel and locations, Parker also offers the superior advantage of supply and support in your locale.







Upstream Oil & Gas

Downstream Oil & Gas

Industrial Gas

Parker EHS Vision Statement:

Parker recognizes, and believes, in the importance of safeguarding natural resources and the global environment. We are committed to our employees, our communities, and our customers: their health, safety and understanding of the need for environmental stewardship.
We are committed to the concept of continuous improvement in environmental performance. Accordingly, we are committed to the following principles:

- We will seek to comply with environmental, health, and safety laws worldwide.
- We strive to minimize or eliminate the generation of waste.
- We will monitor compliance with environmental, health and safety regulations.

Tel: +45 63 12 83 00 | Email: ps@hymatik.com | www.hymatik.com | Hvidkaervej 27a, DK-5250 Odense SV, Denmark

General Technical Information

Design

Parker's Process to Instrument valves are designed to meet the pressure and temperature ratings of ASME B16.34 Class 2500. Conformity to the recommendations of MSS SP-99 is also assured.

Parker's Pro-Bloc® EP series valves conform to the EEMUA 182 specification for integral block and bleed valve manifolds for direct connection to pipework. This specification covers manifolds comprising two or more isolating valves and a vent valve, in an integral body, intended for the following applications:

- Having an inlet directly connected to the process pipework and an outlet connection not larger than DN 50 (NPS 2), whose principal use is as a replacement for individual block and bleed valves at tapping points in piping systems.
- Arrangements having an inlet and outlet directly connected to the process pipework, whose principal use is for equipment or process isolation.

Code/Specification	Description
EEMUA 182	Specification for Integral Block and Bleed and Bleed Valve Manifolds for Direct Connection to Pipework
ASME B16.34/ ASME VIII Div. I	Valves - Flanged, Threaded and Welding End
ASME B16.5	Pipe Flanges and Flanged Fittings
NACE MR0175 / ISO 15156	Petroleum and Natural Gas Industries - Materials for use in H2S - Containing Environments in Oil and Gas Production
API 598	Valves Inspection and Testing
API 607 / ISO 10497	Fire Test of Soft-Seated Quarter Turn Valves Fire Type-Testing Requirements
MSS SP-25	Standard Marking Systems for Valves, Fittings, Flange and Unions
MSS SP-61	Pressure Testing of Valves
MSS SP-99	Instrument Valves
ISO 15848	Industrial valves— Measurement, test and qualification procedures for fugitive emissions
TA Luft	TA-Luft 2002, Absatz 5.2.6.4 und VDI 2440 (Ausgabe Nov. 2000), Absatz 3.3.1.3

Materials of Construction

All materials are purchased from long standing reputable sources, conforming not only to recognised national/ international standards, but also to additional requirements imposed by Parker to assure suitability/usability across the widest spectrum of user applications.
A range of techniques and processes including PMI (Positive Material Identification) are used to validate all incoming material supplies, segregation, storage and maintenance of product quality.

Body material options

Material Group	Material Designator	UNS No.	ASTM Material Grade
Carbon Steel	A105 / A350-LF2	UNS 1.0482	A105
Austenitic Stainless Steel	316/316L Dual Certified	UNS S31600	A479 Gr 316
		UNS S31603	A479 Gr 316L
Super Austenitic Stainless Steel	6Mo	UNS S31254	A479/A276
Austenitic-Ferritic Steel (Duplexes)	Duplex 22Cr	UNS S31803	A479/A276
	Duplex 25Cr	UNS S32750	A479/A276
		UNS S32760	A479/A276
Nickel Alloy	Alloy 825	UNS N08825	ASTM B425
Nickel Alloy	Alloy 625	UNS N06625	ASTM B446

All materials will meet (as applicable) the requirements of NACE MR0103/MR0175 and ISO 15156. They are further supplied as per NORSOK M650/M630 as required.

Flange Connections

Pressure-temperature ratings for flanges ASME/ANSI B16.5

Parker's Process to Instrument valves carry the pressure-temperature ratings of their flange end interface according to ASME B16.5 dimensional specifications and pressure ratings.

Flange Material	°C	-29	38	50	100	150	200	250
	°F	-20	100	122	212	302	392	482
		Working Pressure - PSI (bar)						
Class 150								
Carbon Steel		284 (19.6)	284 (19.6)	278 (19.2)	257 (17.7)	229 (15.8)	200 (13.8)	175 (12.1)
316/316L St.Steel		276 (19.0)	276 (19.0)	267 (18.4)	235 (16.2)	215 (14.8)	199 (13.7)	175 (12.1)
Duplex		290 (20.0)	290 (20.0)	283 (19.5)	257 (17.7)	229 (15.8)	200 (13.8)	175 (12.1)
Class 300								
Carbon Steel		741 (51.1)	741 (51.1)	727 (50.1)	676 (46.6)	654 (45.1)	635 (43.8)	608 (41.9)
316/316L St.Steel		719 (49.6)	719 (49.6)	698 (48.1)	612 (42.2)	558 (38.5)	518 (35.7)	484 (33.4)
Duplex		750 (51.7)	750 (51.7)	750 (51.7)	735 (50.7)	666 (45.9)	619 (42.7)	587 (40.5)
Class 600								
Carbon Steel		1481 (102.1)	1481 (102.1)	1453 (100.2)	1352 (93.2)	1308 (90.2)	1270 (87.6)	1271 (83.9)
316/316L St.Steel		1440 (99.3)	1440 (99.3)	1395 (96.2)	1224 (84.4)	1117 (77.0)	1034 (71.3)	969 (66.8)
Duplex		1500 (103.4)	1500 (103.4)	1500 (103.4)	1469 (101.3)	1333 (91.9)	1237 (85.3)	1173 (80.9)
Class 900								
Carbon Steel		2222 (153.2)	2222 (153.2)	2181 (150.4)	2028 (139.8)	1961 (135.2)	1906 (131.4)	1824 (125.8)
316/316L St.Steel		2159 (148.9)	2159 (148.9)	2093 (144.3)	1836 (126.6)	1675 (115.5)	1552 (107.0)	1452 (100.1)
Duplex		2249 (155.1)	2249 (155.1)	2249 (155.1)	2204 (152.0)	1999 (137.8)	1856 (128.0)	1761 (121.4)
Class 1500								
Carbon Steel		3703 (255.3)	3703 (255.3)	3634 (250.6)	3379 (233.0)	3269 (225.4)	3176 (219.0)	3041 (209.7)
316/316L St.Steel		3600 (248.2)	3600 (248.2)	3489 (240.6)	3060 (211.0)	2792 (192.5)	2586 (178.3)	2421 (166.9)
Duplex		3750 (258.6)	3750 (258.6)	3750 (258.6)	3674 (253.3)	3330 (229.6)	3093 (213.3)	2934 (202.3)
Class 2500								
Carbon Steel		6171 (425.5)	6171 (425.5)	6058 (417.7)	5632 (388.3)	5447 (375.6)	5294 (365.0)	5069 (349.5)
316/316L St.Steel		6000 (413.7)	6000 (413.7)	5814 (400.9)	5099 (351.6)	4653 (320.8)	4310 (297.2)	4033 (278.1)
Duplex		6249 (430.9)	6249 (430.9)	6249 (430.9)	6123 (422.2)	5550 (382.7)	5154 (355.4)	4890 (337.2)

Tel: +45 63 12 83 00 | Email: ps@hymatik.com | www.hymatik.com | Hvidkaervej 27a, DK-5250 Odense SV, Denmark

General Technical Information

Flange Connections

Flange dimensions

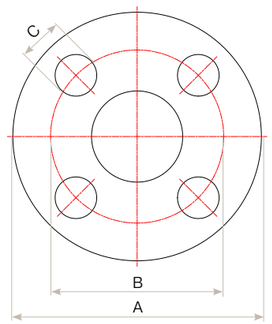

Nominal Pipe Size inch	Dimensions inch (mm)			Number of Mounting Holes
	A	B	C	
Class 150				
1/2	3 1/2 (88.9)	2 3/8 (60.5)	1/2	4
3/4	3 7/8 (98.6)	2 3/4 (69.8)	1/2	4
1	4 1/4 (108)	3 1/8 (79.2)	1/2	4
1 1/2	5 (127)	3 7/8 (98.6)	1/2	4
2	6 (152)	4 3/4 (121)	5/8	4
Class 300/Class 600				
1/2	3 3/5 (95.2)	2 5/8 (66.5)	1/2	4
3/4	4 5/8 (117)	3 1/4 (82.6)	5/8	4
1	4 7/8 (124)	3 1/2 (88.9)	5/8	4
1 1/2	6 1/8 (155)	4 1/2 (114)	3/4	4
2	6 1/2 (165)	5 (127)	5/8	8
Class 900/Class 1500				
1/2	4 3/4 (121)	3 1/4 (82.6)	3/4	4
3/4	5 1/8 (130)	3 1/2 (88.9)	3/4	4
1	5 7/8 (149)	4 (102)	7/8	4
1 1/2	7 (178)	4 7/8 (124)	1	4
2	8 1/2 (216)	6 1/2 (165)	7/8	8
Class 2500				
1/2	5 1/4 (134)	3 1/2 (88.9)	3/4	4
3/4	5 1/2 (140)	3 3/4 (95.2)	3/4	4
1	6 1/4 (159)	4 1/4 (108)	7/8	4
1 1/2	8 (203)	5 3/4 (156)	1 1/8	4
2	9 1/4 (235)	6 3/4 (171)	1	8

Note: Dimensions are for reference only and are subject to change.

Meeting the ISO Standard

From 2007 EU's IPPC directive 96/61/EC legislates for the minimisation of pollution from industrial sources (Many other regions and countries have similar legislation). An important part of this legislation is reducing Ultra-Low emissions, which will have significant consequences for all processes. According to the IPPS all plants and factories which fail to comply with the standards set by the directive may be closed from this point.

To put the scale of the challenge into perspective, a typical European refinery loses between 600 and 10,000 tonnes of emissions per annum. Around 70% of these losses are estimated to be caused by plant equipment such as pipe flanges, pumps, valves and vessels. Leakage from valves is often the biggest culprit, reportedly accounting for around 50% of the Ultra-Low emissions within the chemical and petrochemical industries.

Irrespective of the environmental impact, there is a tremendous financial burden on industry because it represents a huge loss of product, and cause of plant inefficiency. However, the true costs to industry are not always appreciated, as many of the costs associated with Ultra-Low emissions are hidden, such as labour and materials to repair leaks, wasted energy, environmental fines and clean up costs, lost sales due to a poor green image, claims for personal injury and more. In this way, reducing Ultra-Low emissions not only protects the environment, but can save companies time and money.

With the above in mind, the legislation introduces a concept of Best Available Technique (BAT), urging plants to find the best available solution for reducing Ultra-Low emissions throughout the process, from areas such as design, product selection, fitting and fitter training, to maintenance, site monitoring, and so on.

With regard to the design and site monitoring of Ultra-Low emissions ISO 15848 parts 1 and 2 have been developed respectively.

Part 1 covers the classification system and qualification procedure for type testing of valves. The standard specifies three tightness classes of leakage with respect to stem sealing diameter. These classes are class A, B and C. Class A having the smallest environmental leakage. Each class level is one hundred fold lower than the class above i.e. a class B product may have a leakage of 100 times that of a class A product. The standard also specifies the duty that the valve has been tested to.

Parker Hannifin is now able to offer our full range of flanged products with a class A approval to ISO 15848-1. These products are identified as the Ultra-Low Emissions range and are certified as ISO FE AH-C01-SSA1-t (RT,180°C)-ANSI2500-ISO 15848-1. This states that the product has been classified as meeting the ISO 15848-1 standard with the following criteria;

- Class A tested with Helium
- Endurance class C01 – a mechanical valve which has been tested throughout 500 mechanical actuations with two thermal cycles
- Temperature class RT-180°C – Fully thermal cycled and tested from -29°C to +180°C Pressure class ANSI 2500 – 6000 psi in 316 st.st.

Part 2 of the standard covers production acceptance testing of valves. This production testing can only be carried out to product which has already been approved to part 1 of the standard. Production testing can be carried out to and sampling percentage specified by the purchaser with a minimum of one per lot. The production testing is a simpler helium sniffer test which is carried out at room temperature with no mechanical actuations.



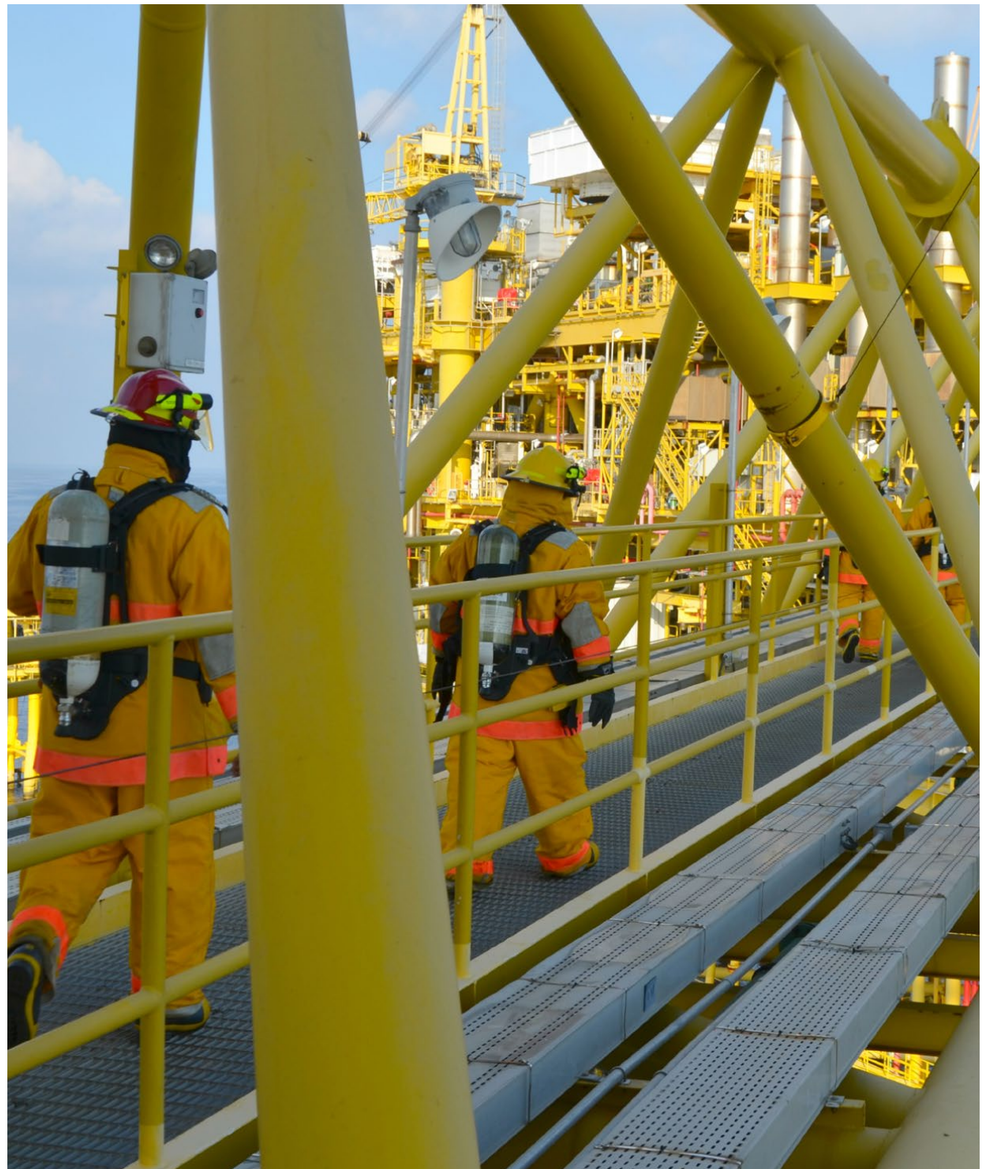

ISO 15848 standard

ISO 15848 parts 1&2 (defining a classification system and qualification procedures, and production acceptance test of industrial valves, respectively) specify new Ultra-Low standards for emissions. This standard is becoming the requirement for oil and gas and petrochemical organisations worldwide. The standard was originally created for process valves and control valves but is now being applied to Instrumentation valves which include primary isolation valves, especially on environmentally sensitive projects.
Meeting these low levels is a challenge, which Parker Instrumentation has solved with the new ball and needle valve designs used in these Double Block and Bleed valves and monoflanges. These designs meet the highest class 'A' level over the temperature range -29°C to +180°C celsius, alongside the standard instrumentation manifold pressure ranges.
Production testing and certification is available upon request. Please specify sample quantity required for production testing with your order.
O-ring material grade is a fluoroelastomer FKM tetrapolymer, specially formulated for explosive decompression (ED) resistance. The seals are qualified to the stringent Norsok M-710 standard that covers both ED resistance and sour gas (H_2S) ageing tests.

Features

- Class 'A' leakage rates achieved
- Bolted ball valve bonnet assembly
- All threads sealed from the media
- All ball valves are bi-directional
- Firesafe design available

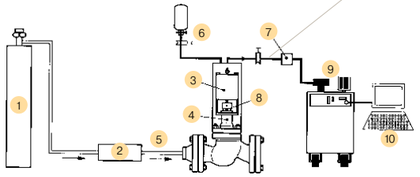

Prototype testing schematic as per ISO 15848-1

Reference	Description
1	Helium at 97% purity
2	Pressure control
3	Actuator
4	Vacuum
5	Helium
6	Standard calibrated leak
7	Vacuum safety
8	Tested stem sealing
9	Helium mass spectrometer
10	Data acquisition

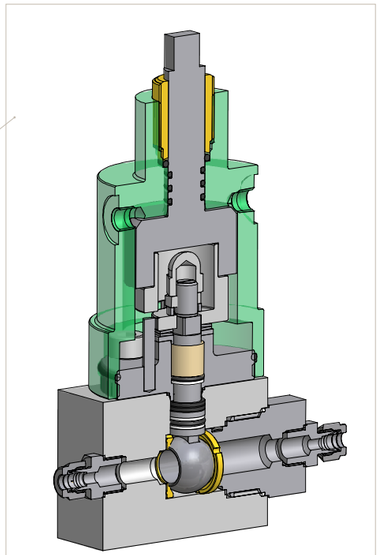

Ball valve ISO 15848-1
Prototype testing assembly

Tel: +45 63 12 83 00 | Email: ps@hymatik.com | www.hymatik.com | Hvidkaervej 27a, DK-5250 Odense SV, Denmark

Monoflange

MF Series

Overview

Parker's monoflange allows a safe removal of a pressure measuring device such as a transmitter or a gauge. "In situ" instrument calibration can also be achieved by using the monoflange vent as the test port.
The compact single piece construction offers space and weight saving benefits over the traditional method of using two or three separate valves fabricated to create block and bleed or double block and bleed.



Monoflange with Outside Screw & Yoke (OS&Y) valve primary isolation



Monoflange with needle valve (H Series) primary isolation

These manifolds can be mounted directly onto a vertical or horizontal flange (dual outlet arrangement).

Parker are able to supply monoflange valves with integral ended compression fittings, removing the need for NPT threads and associated sealant or tape.

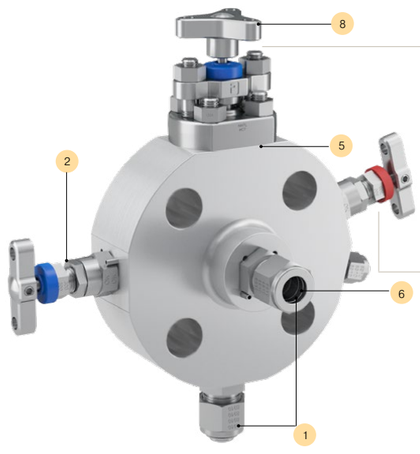

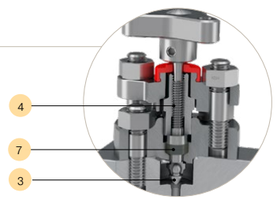

Image shown: OS&Y valve

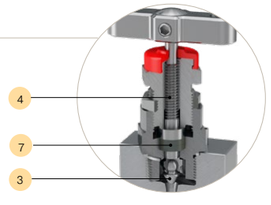

Image shown: H Series needle valve vent

Monoflange with Outside Screw & Yoke (OS&Y) valve primary isolation

Markets / Applications

- Oil & Gas Upstream
- Oil & Gas Downstream
- Petrochemical
- Chemical
- Industrial Gas

Design Standards

- Flange geometry and thickness: ANSI B16.5
- Pressure/temperature boundary designs: ASME VIII Div. 1; verified by testing
- Fire safe: API 6FA and API 607
- NACE

Technical Specifications

Seat material	Metal to Metal
Packing material	PTFE (standard), Graphite (optional)
Stem Tip	17-4PH St. St
Body materials	Stainless Steel ASTM A182-F316/F316L Alloy M400 Duplex A182-F51 Super Duplex ASTM A182-F53/F55 Alloy C276 Low Temp Carbon Steel ASTM A350 LF2/ ASTM A105 6Mo Alloy 625 Alloy 825
Max. Working Temperature	PTFE packing: 260°C (500°F) Graphite packing: 538°C (1000°F)
Min. Working Temperature	-54°C (-65°F)
Max. Working Pressure	6,249 PSI (431 bar)

Features, Benefits and Values

Reference	Feature	Benefit	Value
	Compact design combining multiple valves into one body	Space and weight saving Reduction in potential leak paths	**Safety** **Reliability** **Lower overall cost**
1	Dual outlet option	Enables both horizontal and vertical mount of the instrument gauge or transmitter	**Ease of Operation**
2	Incorporation of Parker H Series needle valve technology	Proven performance of a technology utilised across a wide range of products	**Performance & Reliability**
3	Self-centering, non-rotating stem tip	Bubble-tight shut off	**Performance & Reliability**
4	All stem threads are internal on the Outside Screw and Yoke (OS&Y) valve and protected from the environment	Prevents ingress of external moisture or contamination to the stem threads	**Performance & Reliability** **Safety**
5	No gap between body and bonnet on the OS&Y valve	Prevents ingress of external moisture or contamination to the bonnet studs	**Performance & Reliability** **Safety**
6	Integral compression ends available (A-LOK®, CPI™)	Reduces leak paths Removes the need for PTFE tape and sealant Reduces component costs	**Performance & Reliability** **Lower overall cost**
7	Gland packing below stem threads preventing thread lubricant wash-out	No system contamination	**Safety** **Performance & Reliability**
8	Tri-lobe handle on the OS&Y valve	Prevents over-torquing of the valve	**Safety**
	Metal identification label	Identifies product part number, flow paths, material and temperature	**Safety**

Tel: +45 63 12 83 00 | Email: ps@hymatik.com | www.hymatik.com | Hvidkaervej 27a, DK-5250 Odense SV, Denmark

Monoflange

MF Series

Technical Information

Bill of Materials

Description	St.Stl	Duplex	Super Duplex	Carbon Steel
Body	316 St.Stl ASTM A479	Duplex UNS 31803	Super Duplex UNS S32750/32760	ASTM A105 /A350-LF2
Tip	17-4PH St.Stl	Duplex UNS S.32750/32760	Alloy 625	17-4PH St.Stl
Joint Seal	316 St.Stl ASTM A479	6MO	Alloy 625	316 St.Stl ASTM A479
Packing	PTFE / Graphite			
Thrust Bush	316 St.Stl			
Stem	316 St.Stl ASTM A479	Duplex UNS 31803	Super Duplex UNS S32750/32760	316 St.Stl ASTM A479
Gland Adjuster	316 St.Stl. ASTM A479			
Handle	316 St.Stl			
Grub Screw	A4-80 St.Stl			
Dust Cap	LDPE - Coloured			
Lock Nut	316 St.Stl			
Bonnet	316 St.Stl ASTM A479	Duplex UNS 31803	Super Duplex UNS S32750/32760	316 St.Stl ASTM A479
Stud (OS&Y)	316 St.Stl			
Stud Nut (OS&Y)	316 St.Stl			
Yoke/bridge (OS&Y)	316L St.Stl			

Pressure-Temperature Ratings for Packing

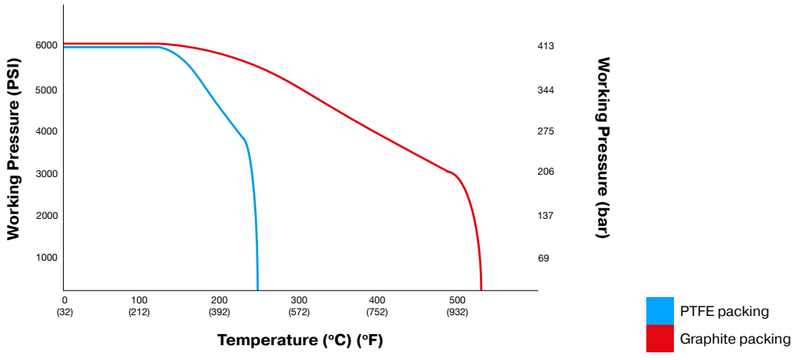

Dual Outlet Option for Vertical or Horizontal Mount

For ease of installation and reading of the pressure gauge, Parker monoflanges are available in dual outlet arrangements allowing for either vertical or horizontal mounting with the gauge fitted on either the outer diameter of the body or the front face of the monoflange.

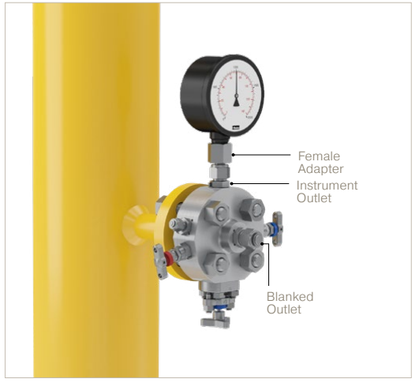

Monoflange with a dual outlet option mounted directly to a vertical pipe.

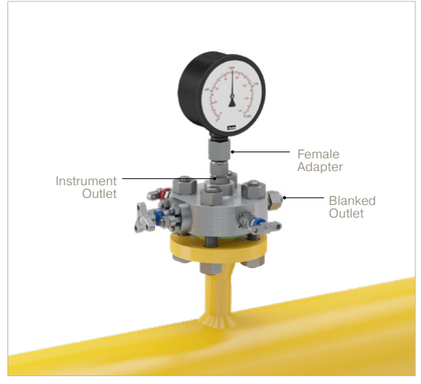

Monoflange with a dual outlet option mounted directly to a horizontal pipe.

Gauge Mounting

Parker's female adapters A-LOK® and CPI™ series enable the gauge to be assembled into the monoflange valve outlet, whilst providing accurate orientation of the gauge. The adapters are available in NPT, BSPT and BSPP connections.

Simply screw the gauge into the selected adapter, then insert the machined tube end into the fitting, orientate the gauge and tighten the fitting as per assembly instructions.

This method removes the need for a swivel gauge adapter.



Parker's tube end female adapter A-LOK® series

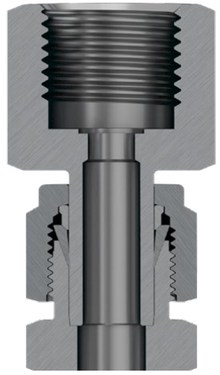

Parker's tube end female adapter installed into an A-LOK® outlet connection.

Tel: +45 63 12 83 00 | Email: ps@hymatik.com | www.hymatik.com | Hvidkaervej 27a, DK-5250 Odense SV, Denmark

Monoflange

MF Series

PTFree connect™



The PTFree connect™ method enables users to assemble tube lines to any of the monoflange ports without the need for PTFE tape or liquid sealant.

These will be factory fitted, pin locked and pressure tested.

Some size restrictions may be necessary due to the close proximity of some connections and the across flat hexagon dimensions. The PTFree connect™ male connector outlets are 1/2" or 12mm O.D. and vents are 1/4" or 6mm O.D.

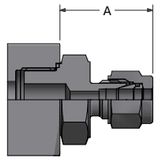

PTFree connect™ male connector (Code PFC)

Tube size	Dimension (A)	
6mm	26.90mm	0.95"
1/4"	24.10mm	0.84"
10mm/3/8"	27.70mm	1.09"
12mm/1/2"	30.30mm	1.20"

Dual Instrument Mounting

Parker's monoflanges are available with two separate instrument outlets. Both outlets have their own double block and bleed flow path with a common vent.

By incorporating two instruments into one flanged body only one flanged outlet is required from the process line, instead of using two monoflanges (one for each instrument).

This configuration enables two pressure measuring devices to be mounted onto the valve, giving the user assurance of continuous operation in the event of one of the devices failing. It also allows double verification of the measurement reading. Each separate instrument can be safely removed for calibration or replacement by isolating and venting the valves relating to that instrument, leaving the remaining instrument in operation.

Please consult your local Parker support.



Monoflange with dual instrument (MFY170). Contact Parker.

Close-Coupled Techniques for Instrument Mounting

Innovations in the design of block and bleed valves for mounting pressure transmitters can deliver significant advantages to both instrument and piping engineers to simplify installation and reduce potential leak paths.

Parker's range of instrument manifold mounting solutions employs close-coupling techniques which reduce or eliminate impulse or gauge lines to improve overall instrument performance and reliability.

The close-coupled technique enables users to connect measuring instrument directly onto the process line via the monoflange valve. The bolted interface between the transmitter and the monoflange eliminates threads, potential thread galling and any need for thread sealants.

There are various possibilities for assembly options utilising the close coupled concept. The following examples demonstrate Pressure and Level measurement assemblies. instrument goes

Static pressure measurement

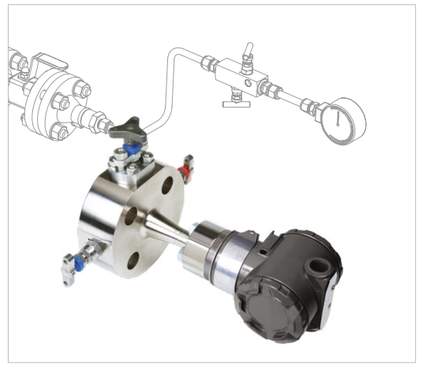

This assembly utilises a Coplanar™ bolted interface between the flanged outlet and the transmitter.

Please consult your local Parker support.

Level measurement

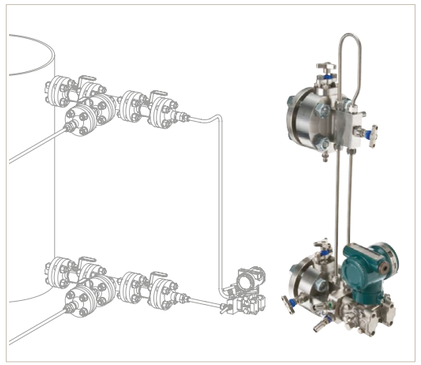

This assembly combines wet and dry leg installations. The close coupled assembly mounted at the bottom of the tank consists of an instrument manifold and a piping isolation monoflange in a single-piece machined unit and the differential pressure transmitter directly mounted onto it. The assembly is connected to the high pressure leg (or wet leg).

The low pressure (or dry leg) is connected to the monoflange and manifold assembly at the top of the tank.

Please consult your local Parker support.

Benefits of close coupled assemblies:

- Compact design with fewer components and fewer leak paths
- Elimination of impulse lines and threaded connections
- Elimination of brackets
- Space savings
- Simplified installation

Learn how to safely remove plugged Monoflange using an integrated Parker Monoball solution. Click here to watch the video.

Scan the QR code to watch the video.

Tel: +45 63 12 83 00 | Email: ps@hymatik.com | www.hymatik.com | Hvidkaervej 27a, DK-5250 Odense SV, Denmark

Monoflange

MF Series

Ordering Information

MF	Y	100	E	8F150	6S	M12A		A1	F

Series

Monoflange	MF

1st Isolate

Needle Valve	H
OS&Y	Y

Material

316 Stainless Steel/316L ASTM A182-F316/ F316L	B
Duplex ASTM A182-F51	E
Super Duplex	F
Low Temp Carbon Steel ASTM A350 LF2/ ASTM A105	H

Arrangement

1st Isolate: Needle (H)				1st Isolate: OS&Y (Y)			
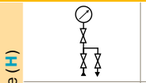		Block-Bleed-Block 1st Isolate: Needle 2nd Isolate: Needle Vent: Needle	100	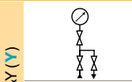		Block-Bleed-Block 1st Isolate: OS&Y 2nd Isolate: Needle Vent: Needle	100
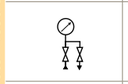		Block-Bleed 1st Isolate: Needle Vent: Needle	120	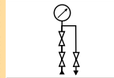		Block-Bleed-Bleed 1st Isolate: OS&Y 2nd Isolate: Needle Vent: Needle	110
		Block-Bleed 1st Isolate: Needle Vent: Needle	130			Block-Bleed 1st Isolate: OS&Y Vent: Needle	120

Flange x Flange configuration:

For Flange x Flange variants replace **1** (the first digit of the arrangement designator) with **2**, i.e. **MFH200, MFH220, MFY250**



Notes:

- All non wetted parts will be supplied in standard stainless steel for corrosion resistant alloys. For carbon steel construction trim materials will be supplied in stainless steel
- Certification requirements and customer specifications MUST be provided at enquiry and order stage
- For DIN flange requirements full details must be specified separately

Seat Orifice Size

6 mm	6S

Valve Packing

PTFE	*
Graphite *	3

* Fitted as standard - No part number designator required
* Not required when Fire Safe design option (F) selected

Optional Outlet Connection

PTFree connect™ male union	PFC	A-LOK®	A	12 mm	M12
				1/2"	I8

- Standard outlet connection is 1/2" Female NPT - No part number designator required.
- Standard vent is 1/4" Female NPT - No part number designator required.
- Plug supplied loose.

Valve Handle Options

Anti-tamper (vent)	A*
Padlock handle locking	L*

* Insert valve number:
1 - Primary
2 - Secondary
12 - Primary/Secondary
4 - All

Padlocks not supplied.

Compliance

NACE	N
Fire Safe* & NACE	FN

* Primary valve only - OS&Y needle valve

Flange Details

Flange Size		Flange Style		Flange Class	
1/2" *	8	Raised Face Spiral	F	150 *	150
3/4" *	12	Ring Type Joint *	T	300	300
1"	16			600	600
1 1/2"	24			900	900
2"	32			1500	1500
				2500	2500

* Ring type joints (T) CANNOT be supplied for 1/2" and 3/4" class 150 flanges.

Head Assembly Options



Anti-tamper spindle

This design valve head is to prevent accidental opening of the vent.

All valves with this anti-tamper spindle are supplied with a key.



T bar handle locking

This design valve head is to prevent unauthorised operation of the valve. The hole size is 6mm (0.24").

Padlocks are not provided.



Key

The Key is necessary to open or close the anti-tamper spindle (vent valve). The Key is also available to purchase as a separate item. Please note, image of the key is not to scale compared with the anti-tamper spindle.

Tel: +45 63 12 83 00 | Email: ps@hymatik.com | www.hymatik.com | Hvidkaervej 27a, DK-5250 Odense SV, Denmark

Low Emissions Monoflange

FEMF Series

Parker offers Monoflanges in accordance to the ISO15848-1 to both class A and B. The valves prototype testing (part 1) is third party witnessed and verified. All valves are production tested to part 2 of the standard.

Design Standards:

- ISO15848-1 class A and B.
- Flange geometry and thickness: ANSI B16.5
- Pressure/temperature boundary designs: ASME VIII Div. 1; verified by testing
- Fire safe: API 6FA and API 607
- NACE

Low Emissions Head Designs

Low Emissions Needle Valve H Series

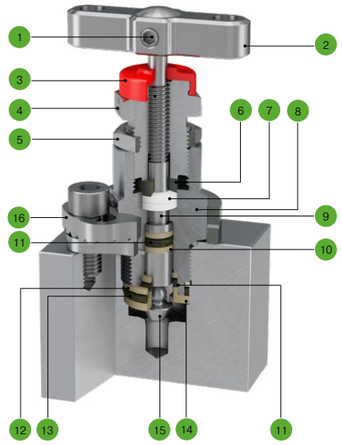

Reference	Description
1	Positive handle retention
2	“T” bar
3	Dust cap
4	Gland packing adjuster
5	Gland adjuster lock nut
6	Thrust bush
7	Gland packing (adjustable)
8	Valve bonnet
9	Anti-blow-out spindle
10	Anti-extrusion ring
11	Elastomeric o-ring (stem seal)
12	Anti-extrusion ring
13	Elastomeric o-ring (body seal)
14	Bonnet end cap
15	Spindle tip
16	Tru-Loc® safety bonnet lock

Tru-Loc® safety bonnet lock



The unique Parker Tru-Loc® security locking system is applied to the body-bonnet interface. It can also be applied to many other screwed component interfaces. Extensive tests have proven that threaded connection interfaces secured with Tru-Loc® guarantee 100% security in preventing movement between connected components. This lock also prevents accidental loosening or removal of the bonnet assembly.

Low Emissions Outside Screw and Yoke (OS&Y)

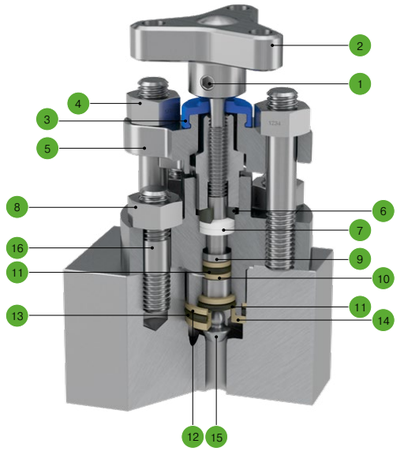

Reference	Description
1	Positive handle retention
2	Tri-lobe handle
3	Dust cap
4	Bridge nuts
5	Bridge (yoke)
6	Thrust bush
7	Gland packing (adjustable)
8	Stud nuts
9	Anti-blow-out spindle
10	Anti-extrusion ring
11	Elastomeric o-ring (stem seal)
12	Anti-extrusion ring
13	Elastomeric o-ring (body seal)
14	Bonnet end cap
15	Spindle tip
16	Body bonnet studding

Pressure vs temperature ratings

(Stainless Steel body material)

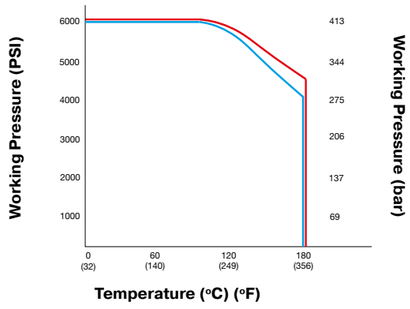

PTFE packing Graphite packing

Notes:

- Production testing and certification available on request
- ISO15848-1 prototype tested using global helium vacuum method
- Also meets the requirements per TA-Luft according to VDI 2440 as tested by TUV SUD Industrie Service GMBH performing better than a leakage rate of VDI 2440 = 10 -4 mbar .l /s . m

Technical Specifications

Seat material	Metal to Metal
Packing material	PTFE (standard), Graphite (optional)
Stem Tip	17-4PH St. St (standard) PEEK (optional)
Body materials	Stainless Steel ASTM A182-F316/F316L Alloy M400 Duplex A182-F51 Super Duplex ASTM A182-F53/F55 Alloy C276 Low Temp Carbon Steel ASTM A350 LF2/ ASTM A105 6Mo Alloy 625 Alloy 825
Max. Working Temperature	180° C (356° F)
Min. Working Temperature	-29° C (-20° F)
Max. Working Pressure	6,249 PSI (431 bar)
Tightness class A	⩾1 x 10^{-6} mg.s^{-1}.m^{-1}
Performance class	ISO FE AH-C01-SSA1-t (RT,180°C)-AN-SI2500-ISO 15848-1
O–ring material	Fluoroelastomer FKM Tetrapolymer *

* Specially formulated for explosive decompression (ED) resistance. These seals are qualified to the stringent NORSOK M-170 standard covering both ED resistance and sour gas (H2S) ageing tests.

Tel: +45 63 12 83 00 | Email: ps@hymatik.com | www.hymatik.com | Hvidkaervej 27a, DK-5250 Odense SV, Denmark

Low Emissions Monoflange

FEMF Series

Ordering Information

FEBMF | **H** | **100** | **E** | **8F150** | **6S** | **M12A** | | **A1** | **F**

Series	
Ultra-Low Emissions Monoflange Class A	FEMF
Ultra-Low Emissions Monoflange Class B	FEBMF

1st Isolate	
Needle Valve	H
OS&Y	Y

Material	
316 Stainless Steel/316L ASTM A182-F316/ F316L	B
Duplex ASTM A182-F51	E
Super Duplex ASTM A182-F53/F55	F
Low Temp Carbon Steel ASTM A350 LF2/ ASTM A105	H

Arrangement

1st Isolate: Needle (H)	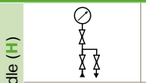		Block-Bleed-Block 1st Isolate: Needle 2nd Isolate: Needle Vent: Needle	100	1st Isolate: OS&Y (Y)	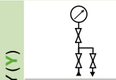		Block-Bleed-Block 1st Isolate: OS&Y 2nd Isolate: Needle Vent: Needle	100
	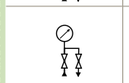		Block-Bleed 1st Isolate: Needle Vent: Needle	120		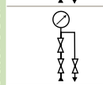		Block-Block-Bleed 1st Isolate: OS&Y 2nd Isolate: Needle Vent: Needle	110
	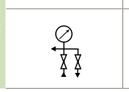		Block-Bleed 1st Isolate: Needle Vent: Needle	130		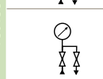		Block-Bleed 1st Isolate: OS&Y Vent: Needle	120

Flange x Flange configuration:

For Flange x Flange variants replace **1** (the first digit of the arrangement designator) with **2**, i.e. **FEMFH200, FEMFH220, MFY250**



Seat Orifice Size	
6 mm	6S

Valve Packing	
PTFE	*
Graphite *	3

* Fitted as standard - No part number designator required
* Not required when Fire Safe design option (F) selected

Optional Outlet Connection					
PTFree connect™ male union	PFC	A-LOK®	A	12 mm	M12
				1/2"	I8

- Standard outlet connection is 1/2" Female NPT - No part number designator required.
- Standard vent is 1/4" Female NPT - No part number designator required.
- Plug supplied loose.

Valve Handle Options	
Anti-tamper (vent)	A*
Padlock handle locking	L*

* Insert valve number:
1 - Primary
2 - Secondary
12 - Primary/Secondary
4 - All

Padlocks not supplied.

Compliance	
NACE	N
Fire Safe* & NACE	FN

* Primary valve only - OS&Y needle valve

Flange Details

Flange Size		Flange Style		Flange Class	
1/2" *	8	Raised Face Spiral	F	150 *	150
3/4" *	12	Ring Type Joint *	T	300	300
1"	16			600	600
1 1/2"	24			900	900
2"	32			1500	1500
				2500	2500

* Ring type joints (T) CANNOT be supplied for 1/2" and 3/4" class 150 flanges.

Notes:

- All non wetted parts will be supplied in standard stainless steel for corrosion resistant alloys. For carbon steel construction trim materials will be supplied in stainless steel
- For customer specific options not covered here, engineering will allocate a part number at quotation stage
- Certification requirements and customer specifications MUST be provided at enquiry and order stage
- Cross hole drillings are of 1 mm smaller diameter than the stated seat orifice sizes
- For DIN flange requirements full details must be specified separately.

Tel: +45 63 12 83 00 | Email: ps@hymatik.com | www.hymatik.com | Hvidkaervej 27a, DK-5250 Odense SV, Denmark

Pro-Bloc® - Modular Single Piece DBB Valve

EP Series - EEMUA 182 Design Conformance

Overview

Parker's Pro-Bloc® EP series valve, conforming to the EEMUA 182 standard is a process to instrument valve which has a double block and bleed function and consists of two separate isolating balls and one vent in a single unit. The valve is also available in a block and bleed arrangement.

The single piece construction offers space and weight saving benefits over the traditional method of using three separate valves fabricated to create double block and bleed.

Parker EP series Process to Instrument valves locate directly onto the process pipeline and facilitate a double block and bleed function for the safe removal of pressure measuring instruments (transmitter or gauge).

This is done by isolating the primary block valve, opening the vent to remove the pressure within the instrument, then closing the vent and isolate the secondary block valve. The transmitter (or gauge) can now be safely removed for replacement or calibration in a workshop. The calibrated or replacement transmitter is then re-installed and the block valves returned to the open position to resume the instrument function of pressure measurement.

The EP series is designed to the EEMUA 182 design code giving the operator and owner assurance of a valve designed to sound engineering practices. The key advantages of EEMUA 182 are shown on the Features, Benefits and Values table.

Parker offer these valves in many configurations in a wide variety of materials commonly used in industries today. They are manufactured in our UK ISO9001, ISO14001 and ISO45001 compliant facility.

Parker are able to supply all valves with integral ended compression fittings for remote applications where the measuring instrument is not directly connected to the valve.

The integral compression ends (two ferrule A-LOK® or single ferrule CPI™) remove the need for NPT, thus removing potential galling, thread tape or sealant, additional leak paths and at the same time reduce the costs associated with buying and installing a separate fitting.



Pro-Bloc® EP Series with EEMUA 182 design conformance

Markets / Applications:

- Oil & Gas Upstream
- Oil & Gas Downstream
- Petrochemical
- Chemical
- Industrial Gas

Technical Information

Technical Specifications

Bore sizes	10 mm, 15 mm, 25 mm
Seat materials	PTFE, PEEK
Body materials	Stainless Steel ASTM A182-F316/F316L Duplex A182-F51 Super Duplex ASTM A182-F53/F55 Low Temp Carbon Steel ASTM A350 LF2/ ASTM A105 6Mo Alloy 625 Alloy 825
Max. Working Temperature	232°C
Min. Working Temperature	-54°C
Max. Working Pressure	6,249 PSI (431 bar)

Design Standards

- EEMUA 182
- Body wall thickness: ASME B16.34/ASME VIII Div. I
- Fire safe: API 6FA and API 607
- NACE

Learn how to safely remove a pressure instrument for calibration or calibrate "in-situ" using Parker's Pro-Bloc® valve. Click here to watch the video.

Scan the QR code to watch the video.

Bill of Materials

Description	Stainless Steel	Carbon Steel	Duplex
Body	316/316L St.Stl ASTM A182-F316/F316L	ASTM A105 /A350-LF2	Duplex St.Stl ASTM A182-F51
End Connections and Flange Inserts	316/316L St.Stl ASTM A479 UNS S31600/S31603	ASTM A105 /A350-LF2	Duplex St.Stl ASTM A479 UNS S31803
Ball Valve Ball	316/316L St.Stl ASTM A479 UNS S31600/S31603		Duplex St.Stl ASTM A479 UNS S31803
Ball Valve Stems	316/316L St.Stl ASTM A479 UNS S31600/S31603		Duplex St.Stl ASTM A479 UNS S31803
Ball Valve Seats	PTFE / PEEK		
Ball Valve Packing	Graphite		
Body Seals	316/316L St.Stl ASTM A479 UNS S31600/S31603 Graphite		6MO ASTM A479 UNS S31254
Needle Valve Stem	316/316L St.Stl ASTM A479 UNS S31600/S31603		Duplex St.Stl ASTM A479 UNS S31803
Needle Valve Tip	17/4 PH St.Stl ASTM A564/A564M UNS S17400		Super Duplex St.Stl ASTM A479 UNS S32750/S32760
Needle Valve Screwed Bonnet and Gland Adjuster	316/316L St.Stl ASTM A479 UNS S31600/S31603		Duplex St.Stl ASTM A479 UNS S31803
All other components	316 St.Stl		

Tel: +45 63 12 83 00 | Email: ps@hymatik.com | www.hymatik.com | Hvidkaervej 27a, DK-5250 Odense SV, Denmark

Pro-Bloc® - Modular Single Piece DBB Valve

EP Series - EEMUA 182 Design Conformance

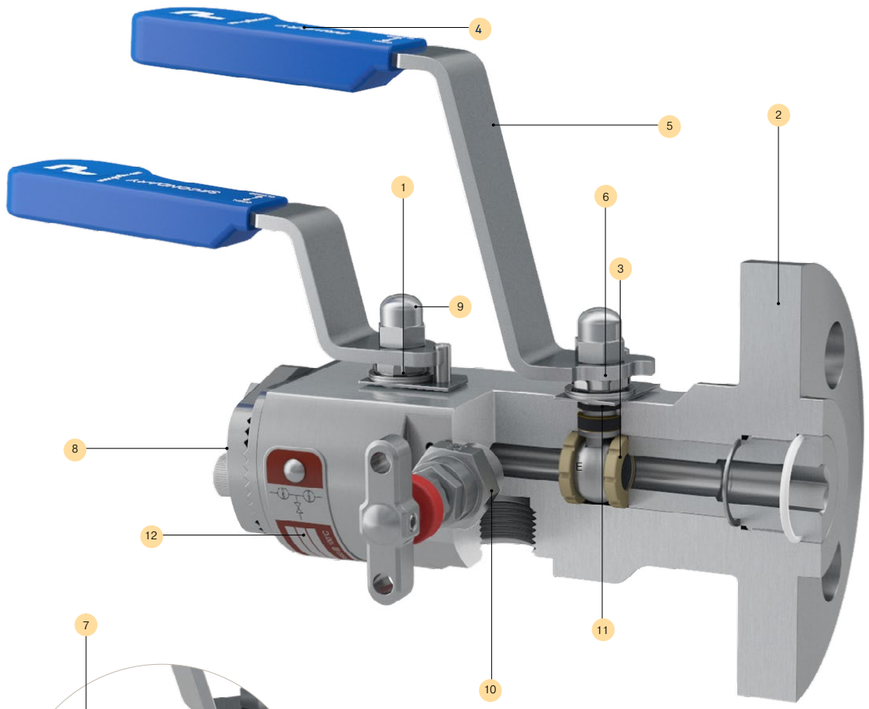

Tru-Loc® Mechanical End Connection

Designed specifically for Pro-Bloc® end connection security. Extensive tests have proved that end connections locked with the Tru-Loc™ end connector locking mechanism give 100% security and prevent end connector movement when disconnecting instruments or connectors. This ensures that the ball seat is securely positioned at all times.

Integral tubing connections

For the ultimate in safety, reliability, speed and ease of installation all valves can be specified with integral tube connections: Parker A-LOK® (Two Ferrule) or CPI™ (Single Ferrule) compression fitting technologies.

Features, Benefits and Values

Reference	Feature	Benefit	Value
1	Packing adjustment nut under lever	Allows removal of handle without compromising packing integrity Conforms to EEMUA 182	**Safety** **Performance & Reliability**
2	Close to shape forgings	Strength Reduction in potential leak paths	**Safety** **Durability**
3	Slotted seats	Cavity relief on seats prevents over pressurisation of ball cavity. Conforms to EEMUA 182	**Safety**
4	Ergonomic vinyl sleeves	Easy to grip and comfortable	**Ease of Operation**
5	Longer and thicker gauge levers	Gives more hand clearance More rugged and positive feel	**Ease of Operation** **Durability**
6	Double D stem drive for 10mm bore size, rectangular drive on stems for bore sizes over 10mm	Ensures handle orientation is correct Conforms to EEMUA 182	**Performance & Reliability** **Ease of Operation**
7	Integral compression ends available (A-LOK®, CPI™)	Reduces leak paths Removes the need for PTFE tape and sealant Reduces component costs	**Performance & Reliability** **Lower overall cost**
8	Tru-Loc®	Prevents accidental disassembly of end loaded valves	**Safety**
9	Domed nut	Prevents dirt or corrosion compromising the thread integrity	**Safety** **Performance & Reliability**
10	5mm Bleed Hole	Prevents plugging and conforms to EEMUA 182	**Performance & Reliability**
11	Blowout proof stem	Prevents catastrophic failure and conforms to EEMUA 182	**Safety**
12	Metal identification label	Identify product part number, flow paths, material and temperature	**Safety**

Pressure-Temperature Ratings for Seats

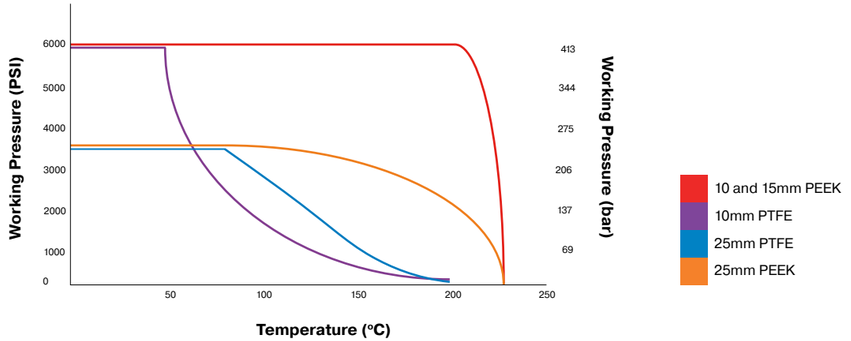

Tel: +45 63 12 83 00 | Email: ps@hymatik.com | www.hymatik.com | Hvidkaervej 27a, DK-5250 Odense SV, Denmark

Pro-Bloc® - Modular Single Piece DBB Valve

EP Series - EEMUA 182 Design Conformance

Standard Head Designs

Needle Valve H Series - Class 2500 (6,000 PSI)

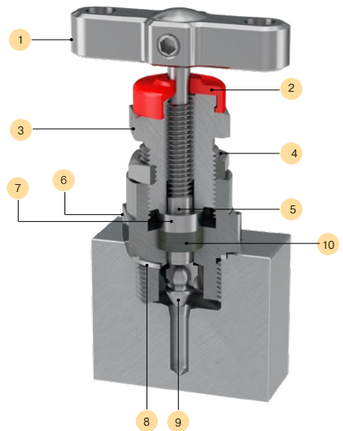

Reference	Description
1	Ergonomic 'T' bar style handle with positive retention
2	Dual purpose dust cap provides functional identification
3	Compensatory adjustable gland
4	Secure anti-vibration gland lock nut
5	Anti-blowout low torque back seating stem
6	All metal body bonnet seal
7	Gland thrust bush ensures uniform packing compression and tight sealing
8	Annealed sealing washer guarantees 100% sealing assurance
9	Self-centering, non-rotating stem tip guarantees bubble tight shut off
10	Gland packing below stem threads preventing thread lubricant wash-out

Notes:

- For products specified in optional materials, non-wetted parts will be 316 Stainless Steel as standard.

Outside Screw and Yoke (OS&Y) - Class 2500 (6,000 PSI)

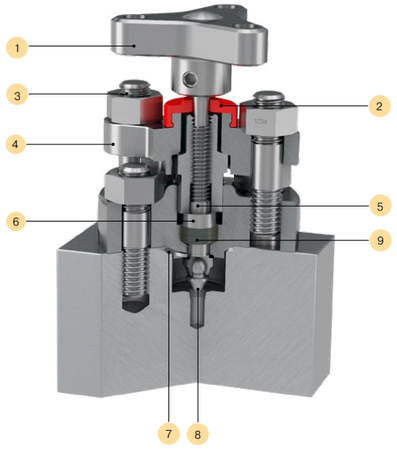

Reference	Description
1	Trilobe handle prevents excessive torque
2	Dual purpose dust cap provides functional identification
3	Packing adjustment nuts
4	Bridge (Yoke) provides downforce for packing
5	Anti-blowout low torque back seating stem
6	Gland thrust bush ensures uniform packing compression and tight sealing
7	Annealed sealing washer guarantees 100% sealing assurance
8	Self centering, non-rotating stem tip guarantees bubble tight shut off
9	Gland packing below stem threads preventing thread lubricant wash-out

Notes:

- For products specified in optional materials, non-wetted parts will be 316 Stainless Steel as standard.

Pro-Bloc® Bore Size/Class Combinations

The shaded areas shown on the chart below indicate the available flange class/size per bore size. If not shaded the combinations cannot be manufactured on end entry type valves.

		Raised Face			Ring Type Joint		
Flange		Bore Size			Bore Size		
Class	Size	10mm	15mm	25mm	10mm	15mm	25mm
150 LB	1/2”						
	3/4”						
	1”						
	1 1/2”						
	2”						
	2 1/2”						
	3”						
300 LB	1/2”						
	3/4”						
	1”						
	1 1/2”						
	2”						
	2 1/2”						
	3”						
600 LB	1/2”						
	3/4”						
	1”						
	1 1/2”						
	2”						
	2 1/2”						
	3”						
900/1500 LB	1/2”						
	3/4”						
	1”						
	1 1/2”						
	2”						
	2 1/2”						
	3”						
2500 LB	1/2”						
	3/4”						
	1”						
	1 1/2”						
	2”						
	2 1/2”						
	3”						

Tel: +45 63 12 83 00 | Email: ps@hymatik.com | www.hymatik.com | Hvidkaervej 27a, DK-5250 Odense SV, Denmark

Pro-Bloc® - Modular Single Piece DBB Valve

EP Series - EEMUA 182 Design Conformance

Ordering Information

EPB — Series

Series	
EP Pro-Bloc®	EPB

Y — Ball Valve Bore Size

Ball Valve Bore Size	
10 mm	Y
15 mm	X
25 mm	V

The standard outlet for bore sizes 10 mm and 15 mm is 1/2" Female NPT

100 — Arrangement

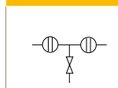		Block-Bleed-Block 1st Isolate: Ball 2nd Isolate: Ball Vent: Needle	100
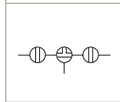		Block-Bleed-Block 1st Isolate: Ball 2nd Isolate: Ball Vent: Ball	120
		Block-Bleed 1st Isolate: Ball Vent: Needle	130
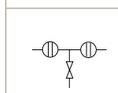		Block-Bleed-Block (Modular Construction) 1st Isolate: Ball 2nd Isolate: Ball Vent: Needle	500
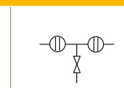		Block-Bleed-Block 1st Isolate: Ball 2nd Isolate: Ball Vent: Needle	200
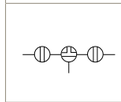		Block-Bleed-Block 1st Isolate: Ball 2nd Isolate: Ball Vent: Ball	220
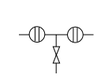		Block-Bleed-Block (Modular Construc-tion) 1st Isolate: Ball 2nd Isolate: Ball Vent: Needle	600

E — Material

Material	
316 Stainless Steel/ 316L ASTM A182-F316/ F316L	B
Duplex A182-F51	E
Super Duplex ASTM A182-F53/F55 *	F
Low Temp Carbon Steel ASTM A350 LF2/ ASTM A105	H

* Available for arrangements 500 and 600.

8F150 — Flange Details

Flange Size		Flange Style		Flange Class	
1/2"	8	Raised Face Spiral	F	150	150
3/4"	12	Ring Type Joint	T	300	300
1"	16			600	600
1 1/2"	24			900	900
2"	32			1500	1500
				2500	2500

See page 29 for bore size/class combinations.

[ ] — Seat and Construction Options

Seat and Construction Options	
PTFE Ball Seats	*
PEEK Ball Seats	PB
Needle Tip 17-4PH St. St	*

* Fitted as standard - No part number designator required

A3 — Valve Handle Options

Valve Handle Options	
Anti-tamper (vent) (Needle valve only)	A*
Padlock handle locking	L*

* Insert valve number
1 = Primary
2 = Secondary
12 = Primary and Secondary
3 = Vent
4 = All

NB: Padlocks not supplied

F — Compliance

Compliance	
Fire Safe & NACE	FN

Where fire safe is not required, the default stem packing will be PTFE.

Certification requirements and customer specifications MUST be provided at enquiry and order stage.

Head Assembly Options



Anti-tamper spindle

This design valve head is to prevent accidental opening of the vent.

All valves with this anti-tamper spindle are supplied with a key.



T bar handle locking

This design valve head is to prevent unauthorised operation of the valve. The hole size is 6mm (0.24").

Padlocks are not provided.



Key

The Key is necessary to open or close the anti-tamper spindle (vent valve). The Key is also available to purchase as a separate item. Please note, image of the key is not to scale compared with the anti-tamper spindle.

Notes:

- Plugged vent 1/2" Female NPT as standard. 1/2" NPT plug supplied loose.
- All non wetted parts will be supplied in standard stainless steel for corrosion resistant alloys. For carbon steel construction trim materials will be supplied in stainless steel
- For flange to flange construction when the required flanges are different sizes then specify both sizes example: 1st flange 1" pipe (16), raised face (F), class 900 (900), 2nd flange 1/2" (8), raised face (F), class 900 (900) insert: 16F9008F900. Consult factory for available combinations

Tel: +45 63 12 83 00 | Email: ps@hymatik.com | www.hymatik.com | Hvidkaervej 27a, DK-5250 Odense SV, Denmark

Pro-Bloc® - Modular Single Piece DBB Valve Sampling and Injection Applications

ESP and EJP Series - EEMUA 182 Design Conformance

Overview



Pro-Bloc® ESP and EJP Series range is designed to replace conventional multiple-valve installations where sampling of the process stream or injection into the process stream at full system pressure is required. Both valve series include a probe/quill. The EJP Series features a high integrity full bore non-return valve to eliminate the risk of back flow out of the process stream.

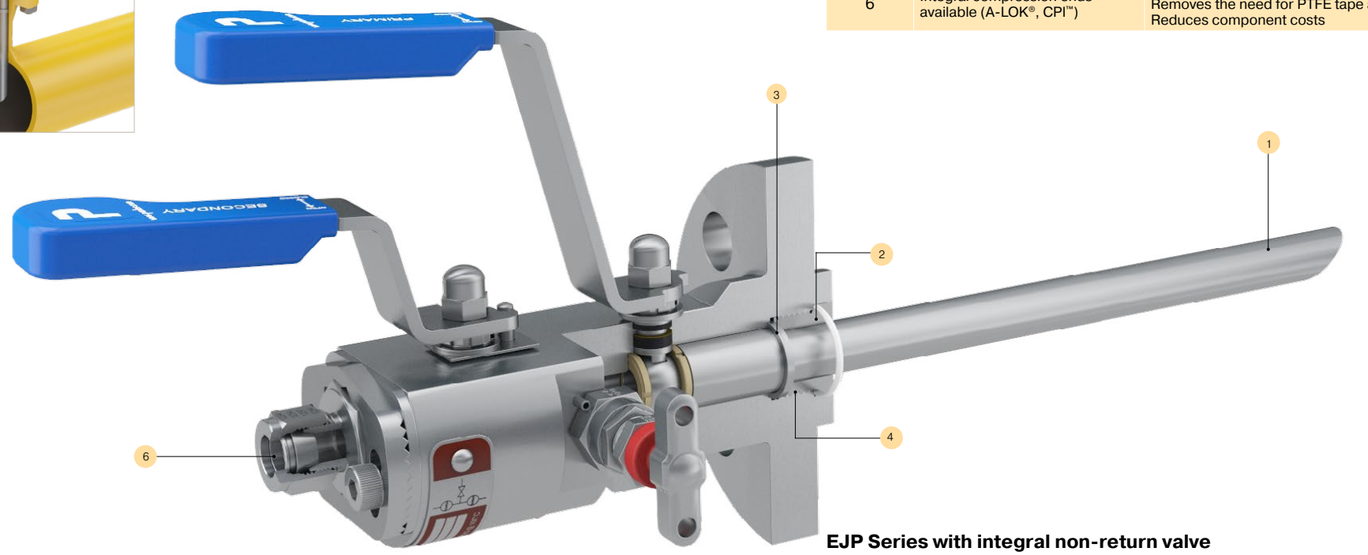

Features, Benefits and Values

Reference	Feature	Benefit	Value
1	Gun-drilled sample/injection quill	Machined from solid bar, giving strength to resist vibration	**Durability** **Safety**
2	Environmental seal	Prevents inboard and outboard leakage	**Performance & Reliability**
3	Integral locking collar	Provides accurate location of quill giving optimum pressure on seat ensuring seat tightness and allowing low torque actuation of the valve	**Performance & Reliability** **Safety**
4	Mechanical locking mechanism	Solid mechanical fixing, no welding involved	**Performance & Reliability** **Safety**
5	Self centering poppet seal (EJP Series)	Ensures full sealing capability, preventing excessive wear of poppet o-ring	**Performance & Reliability**
6	Integral compression ends available (A-LOK®, CPI™)	Reduces leak paths Removes the need for PTFE tape and sealant Reduces component costs	**Performance & Reliability** **Lower overall cost**



EJP Series with integral non-return valve

This high integrity full bore non-return (check) valve eliminates the risk of back flow out of the process stream. The design utilises a spring loaded poppet to ensure leak proof performance. The non return valve is designed for higher flow and low pressure drop across the valve - having a larger through bore than most other manufacturers equivalent product.

As standard a viton seal will be supplied with a ‘cracking’ pressure of 10 PSI. A wide variety of seat materials and cracking pressures are available on request.

Tel: +45 63 12 83 00 | Email: ps@hymatik.com | www.hymatik.com | Hvidkaervej 27a, DK-5250 Odense SV, Denmark

Pro-Bloc® - Modular Single Piece DBB Valve Sampling and Injection Applications

ESP and EJP Series - EEMUA 182 Design Conformance

Ordering Information

ESPB **Y** **100** **E**

Series	
Sampling Pro-Bloc®	ESPB
Injection Pro-Bloc®	EJPB

Ball Valve Bore Size	
10 mm	Y
15 mm	X

Material	
316 Stainless Steel/ 316L ASTM A182-F316/ F316L	B
Duplex A182-F51	E
Low Temp Carbon Steel ASTM A350 LF2/ ASTM A105	H
6MO ASTM 479/A276	K

Arrangement		
	Block-Bleed-Block 1st Isolate: Ball 2nd Isolate: Ball Vent: Needle	100
	Block-Bleed 1st Isolate: Ball Vent: Needle	130

Notes:
- Probe length must be specified from the raised face to the end of the probe in mm, to the nearest mm
- Probes are supplied to suit the insertion length dictated by the pipeline diameter and thus must be specified by the customer
- A variety of end preparations and support collars are available
- Wake frequency calculations can be carried out against pipeline flow rates on request

8F150 **8A** **A3** **F** - **100**

Flange Details					
Flange Size		Flange Style		Flange Class	
1"	16	Raised Face Spiral	F	150	150
1 1/2"	24	Ring Type Joint	T	300	300
2"	32			600	600
				900	900
				1500	1500
				2500	2500

10mm bore size 1" and above ASME flanges up to class 2500
15mm bore size 1 1/2" and above ASME flanges up to class 2500

Seat and Construction Options	
PTFE Ball Seats	*
PEEK Ball Seats	PB
Needle Tip 17-4PH St. St	*

* Fitted as standard - No part number designator required

Compliance	
Fire Safe (Graphite packing)	F
NACE	N
Fire Safe & NACE	FN

Where fire safe is not required, the default stem packing will be PTFE.

Certification requirements and customer specifications MUST be provided at enquiry and order stage.

Probe Length (mm)
Maximum probe length 750 mm

Optional Outlet Connection			
3/8"	6	Female NPT	F
1/2"	8	A-LOK®	A
10 mm	M10	CPI™	Z
12 mm	M12		

The following standard outlet connections do not require a part number designator:
10 mm bore = 1/2" Female NPT
15 mm bore = 1/2" Female NPT

Valve Handle Options	
Anti-tamper (vent) (Needle valve only)	A*
Padlock handle locking	L*
O.S.&Y. Needle Valve (vent)	Y*

* Insert valve number:
1 - Primary
2 - Secondary
3 - Vent
4 - All

Padlocks not supplied.

Head Assembly Options



Anti-tamper spindle

This design valve head is to prevent accidental opening of the vent.

All valves with this anti-tamper spindle are supplied with a key.



T bar handle locking

This design valve head is to prevent unauthorised operation of the valve. The hole size is 6mm (0.24").

Padlocks are not provided.



Key

The Key is necessary to open or close the anti-tamper spindle (vent valve). The Key is also available to purchase as a separate item. Please note, image of the key is not to scale compared with the anti-tamper spindle.

Tel: +45 63 12 83 00 | Email: ps@hymatik.com | www.hymatik.com | Hvidkaervej 27a, DK-5250 Odense SV, Denmark

Low Emissions Pro-Bloc® - Modular Single Piece DBB Valve

FM Series - 10mm Bore

Parker offer Pro-Bloc® Modular Single Piece DBB valves in accordance to ISO 15848-1. The valves prototype testing (part 1) is third party witnessed and verified. All valves are production tested to part 2 of the standard.



Pro-Bloc® FE Series valve (10mm bore) in accordance to ISO 15848-1

Technical Specifications

Bore sizes	10 mm
Seat materials	PEEK (ball valve) Metal to Metal (needle valve)
Packing material	Graphite
Body materials	Stainless Steel ASTM A182-F316/F316L Duplex A182-F51 Super Duplex ASTM A182-F53/F55 Low Temp Carbon Steel ASTM A350 LF2/ ASTM A105 6Mo Alloy 625 Alloy 825
Max. Working Temperature (FE)	150°C (302°F)
Min. Working Temperature	-29°C (-20°F); non-operable at -50°C (-58°F)
Max. Working Pressure	6,249 PSI (431 bar)
Tightness class B	⩽1.78 x 10^{-6} mbarl/(s·mm_{dia})

Design Standards:

- ISO15848-1
- EEMUA 182
- Body wall thickness: ASME B16.34/ASME VIII Div. I
- Fire safe: API 6FA and API 607
- NACE

Notes:

- Production testing and certification available on request
- ISO15848-1 prototype tested using global helium vacuum method

Pressure-Temperature Ratings for Ball Valve PEEK Seat

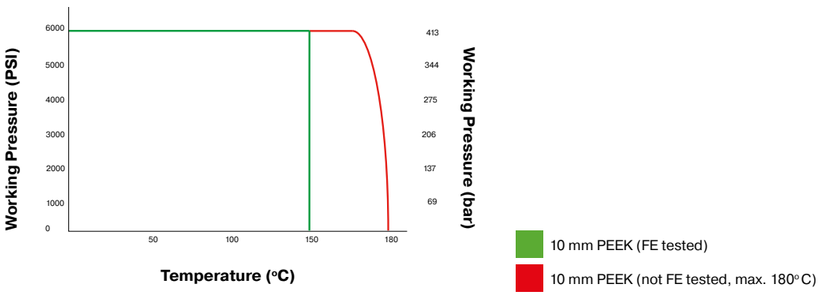

Features, Benefits and Values

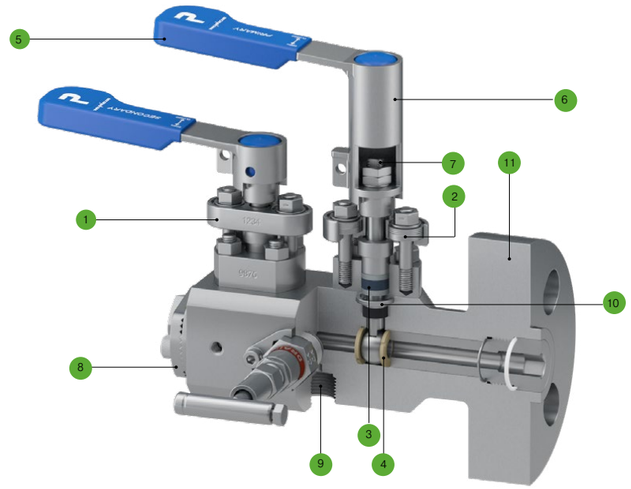

Reference	Feature	Benefit	Value
1	Packing adjustment outside screw and yoke	Allows removal of handle without compromising packing integrity	**Safety** **Performance & Reliability**
2	Belleville washers	Belleville washers maintain load on packing, reducing packing adjustment and ensuring FE capability	**Safety** **Performance & Reliability**
3	Graphite stem packing	Live loaded for FE capability and to compensate for wear	**Safety** **Performance & Reliability**
4	Slotted seats	Cavity relief on seats prevents over pressurisation of ball cavity	**Safety**
5	Ergonomic vinyl sleeves	Easy to grip and comfortable	**Ease of Operation**
6	Longer and thicker gauge levers	Gives more hand clearance More rugged and positive feel	**Ease of Operation** **Durability**
7	Double D stem drive	Ensures handle orientation is correct	**Performance & Reliability** **Ease of Operation**
8	Tru-Loc®	Prevents accidental disassembly of end loaded valves	**Safety**
9	5mm Bleed Hole	Prevents plugging	**Performance & Reliability**
10	Blowout proof stem	Prevents catastrophic failure	**Safety**
11	Close to shape forgings	Strength Reduction in potential leak paths	**Safety** **Durability**

Tel: +45 63 12 83 00 | Email: ps@hymatik.com | www.hymatik.com | Hvidkaervej 27a, DK-5250 Odense SV, Denmark

Low Emissions Pro-Bloc® - Modular Single Piece DBB Valve

FM Series - 10mm Bore

Low Emissions needle valve head design

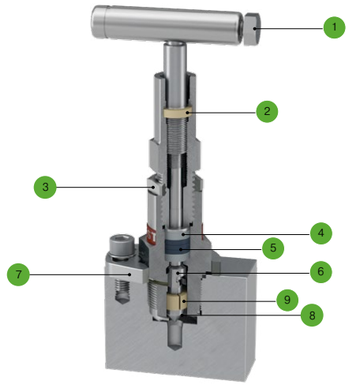

Reference	Description
1	Ergonomic 'T' bar style handle with positive retention
2	PEEK upper stem support gland
3	Secure anti-vibration gland lock nut
4	Gland thrust bush
5	Graphite packing
6	Anti-blowout low torque back seating stem
7	Tru-Loc® bonnet locking plate
8	Self-centering, non-rotating stem for bubble tight shut off
9	PEEK lower stem support gland

Bill of Materials

Description	Stainless Steel	Carbon Steel	Duplex
Body	316/316L St.Stl ASTM A182-F316/F316L	ASTM A105 /A350-LF2	Duplex St.Stl ASTM A182-F51
End Connections and Flange Inserts	316/316L St.Stl ASTM A479 UNS S31600/S31603	ASTM A105 /A350-LF2	Duplex St.Stl ASTM A479 UNS S31803
Ball Valve Ball	316/316L St.Stl ASTM A479 UNS S31600/S31603		Duplex St.Stl ASTM A479 UNS S31803
Ball Valve Stems	316/316L St.Stl ASTM A479 UNS S31600/S31603		Duplex St.Stl ASTM A479 UNS S31803
Ball Valve Seats	PEEK		
Ball Valve Packing	Graphite		
Body Seals	316/316L St.Stl ASTM A479 UNS S31600/S31603 Graphite		6MO ASTM A479 UNS S31254
Needle Valve Stem	316/316L St.Stl ASTM A479 UNS S31600/S31603		Duplex St.Stl ASTM A479 UNS S31803
Needle Valve Tip	17/4 PH St.Stl ASTM A564/A564M UNS S17400		Super Duplex St.Stl ASTM A479 UNS S32750/S32760
Needle Valve Screwed Bonnet and Gland Adjuster	316/316L St.Stl ASTM A479 UNS S31600/S31603		Duplex St.Stl ASTM A479 UNS S31803
All other components	316 St.Stl		



Tel: +45 63 12 83 00 | Email: ps@hymatik.com | www.hymatik.com | Hvidkaervej 27a, DK-5250 Odense SV, Denmark

Low Emissions Pro-Bloc® - Modular Single Piece DBB Valve

FM Series - 10mm Bore

Ordering Information

FMPB — **Y** — **100** — **B** — **8F136** — **A3** — **FN**

Series	
Low Emissions Pro-Bloc®	FMPB

Ball Valve Bore Size	
10 mm	Y

The standard outlet is 1/2" Female NPT

Material	
316 Stainless Steel/ 316L ASTM A182-F316/ F316L	B
Duplex A182-F51	E
Super Duplex ASTM A182-F53/F55 *	F
Low Temp Carbon Steel ASTM A350 LF2/ ASTM A105	H

* Available for arrangements 500 and 600.

Arrangement			
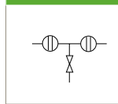		Block-Bleed-Block 1st Isolate: Ball 2nd Isolate: Ball Vent: Needle	100
		Block-Bleed-Block 1st Isolate: Ball 2nd Isolate: Ball Vent: Ball	120
		Block-Bleed 1st Isolate: Ball Vent: Needle	130
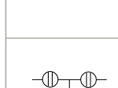		Block-Bleed-Block (Modular Construction) 1st Isolate: Ball 2nd Isolate: Ball Vent: Needle	500
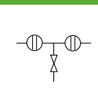		Block-Bleed-Block 1st Isolate: Ball 2nd Isolate: Ball Vent: Needle	200
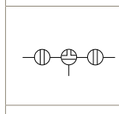		Block-Bleed-Block 1st Isolate: Ball 2nd Isolate: Ball Vent: Ball	220
		Block-Bleed-Block (Modular Construc-tion) 1st Isolate: Ball 2nd Isolate: Ball Vent: Needle	600

Flange Details					
Flange Size		Flange Style		Flange Class	
1/2"	8	Raised Face Spiral	F	1/2"	150, 300, 600 — 136
3/4"	12	Ring Type Joint	T		900, 1500, 2500 — 1525
1"	16			3/4"	150 — 150
1-1/2"	24				300, 600 — 600
2"	32				900, 1500, 2500 — 1525
				1", 1-1/2", 2"	150 — 150
					300, 600 — 600
					900 — 900
					1500 — 1500
					2500 — 2500

Valve Handle Options	
Anti Tamper Needle Valve Only	A*
Padlock Handle Locking	L*

* Insert valve number
1 = Primary
2 = Secondary
12 = Primary and Secondary
3 = Vent
4 = All

NB: Padlocks not supplied

Compliance	
Fire Safe & NACE	FN

Certification requirements and customer specifications MUST be provided at enquiry and order stage.



Notes:
- Plugged vent 1/2" Female NPT as standard. 1/2" NPT plug supplied loose.
- All non wetted parts will be supplied in standard stainless steel for corrosion resistant alloys. For carbon steel construction trim materials will be supplied in stainless steel
- All valves are graphite packed as standard, No PTFE option available
- All valves are Fire Safe as standard
- All ball valves are PEEK seated
- Materials are offered to NACE as standard

Tel: +45 63 12 83 00 | Email: ps@hymatik.com | www.hymatik.com | Hvidkaervej 27a, DK-5250 Odense SV, Denmark

Low Emissions Pro-Bloc® - Modular Single Piece DBB Valve

FE Series - 15 mm Bore, Bolted Bonnet Design

Parker offer Pro-Bloc® Modular Single Piece DBB valves in accordance to ISO 15848-1. The valves prototype testing (part 1) is third party witnessed and verified. All valves are production tested to part 2 of the standard.

Technical Specifications

Bore sizes	15 mm
Seat materials	PEEK (ball valve) Metal to Metal (needle valve)
Packing material	Graphite
Body materials	Stainless Steel ASTM A182-F316/F316L Duplex A182-F51 Super Duplex ASTM A182-F53/F55 Low Temp Carbon Steel ASTM A350 LF2/ ASTM A105 6Mo Alloy 625 Alloy 825
Max. Working Temperature	180° C (356° F)
Min. Working Temperature	-29° C (-20° F)
Max. Working Pressure	6,249 PSI (431 bar)
Tightness class A	⩾1 x 10^{-6} mg.s^{-1}.m^{-1}
Performance class	ISO FE AH-C01-SSA1-t (RT,180°C)-ANSI2500-ISO 15848-1

Design Standards:

- ISO15848-1 class A and B
- EEMUA 182
- Body wall thickness: ASME B16.34/ASME VIII Div. I
- Fire safe: API 6FA and API 607
- NACE

Notes:

- Production testing and certification available on request
- ISO15848-1 prototype tested using global helium vacuum method

Pressure-Temperature Ratings for PEEK Seat

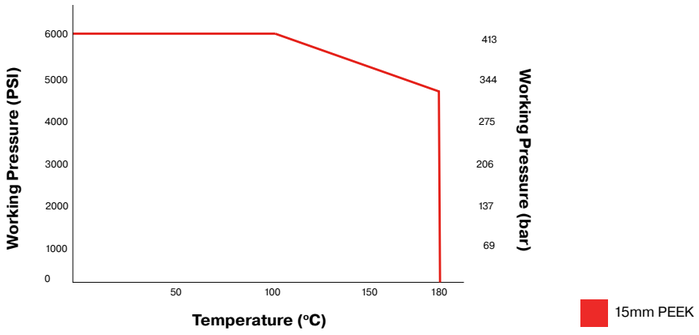

Features, Benefits and Values

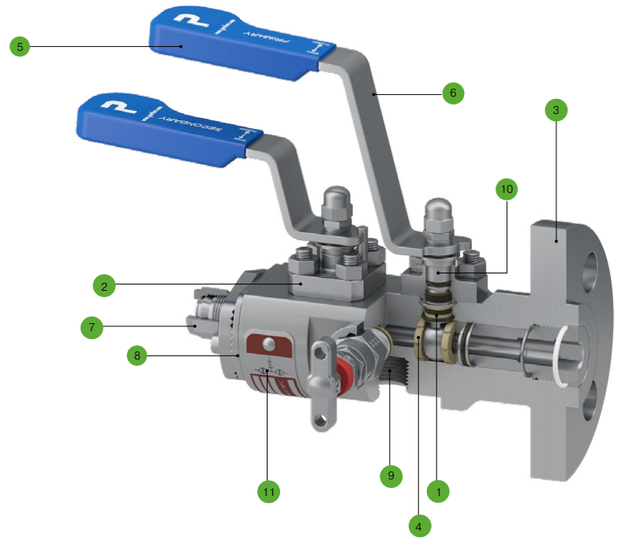

Reference	Feature	Benefit	Value
1	Stem O-ring seals	Provides the sealing of system media and prevents leakage to atmosphere	**Performance**
2	Bolted bonnet construction	Permits a longer stem design to be incorporated allowing more bushing for guidance and stem seals	**Durability**
3	Close to shape forgings	Strength Reduction in potential leak paths	**Safety** **Durability**
4	Slotted seats	Cavity relief on seats prevents over pressurisation of ball cavity. Conforms to EEMUA 182	**Safety**
5	Ergonomic vinyl sleeves	Easy to grip and comfortable	**Ease of Operation**
6	Longer and thicker gauge levers	Gives more hand clearance More rugged and positive feel	**Ease of Operation** **Durability**
7	Integral compression ends available (A-LOK®, CPI™)	Reduces leak paths Removes the need for PTFE tape and sealant Reduces component costs	**Performance & Reliability** **Lower overall cost**
8	Tru-Loc®	Prevents accidental disassembly of end loaded valves	**Safety**
9	5mm Bleed Hole	Prevents plugging and conforms to EEMUA 182	**Performance & Reliability**
10	Blowout proof stem	Prevents catastrophic failure and conforms to EEMUA 182	**Safety**
11	Metal identification label	Identify product part number, flow paths, material and temperature	**Safety**

Tel: +45 63 12 83 00 | Email: ps@hymatik.com | www.hymatik.com | Hvidkaervej 27a, DK-5250 Odense SV, Denmark

Low Emissions Pro-Bloc® - Modular Single Piece DBB Valve

FE Series - 15 mm Bore, Bolted Bonnet Design

Low Emissions needle valve head design

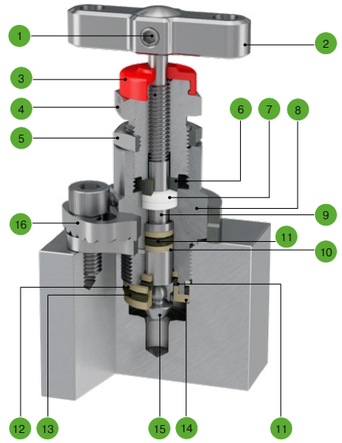

Reference	Description
1	Positive handle retention
2	“T” bar
3	Dust cap
4	Gland packing adjuster
5	Gland adjuster lock nut
6	Thrust bush
7	Gland packing (adjustable)
8	Valve bonnet
9	Anti blow-out spindle
10	Anti extrusion ring
11	Elastomeric o-ring (stem seal)
12	Anti-extrusion ring
13	Elastomeric o-ring (body seal)
14	Bonnet end cap
15	Spindle tip
16	Tru-Loc® safety bonnet lock

Tru-Loc® safety bonnet lock



The unique Parker Tru-Loc® security locking system is applied to the body-bonnet interface. It can also be applied to many other screwed component interfaces. Extensive tests have proven that threaded connection interfaces secured with Tru-Loc® guarantee 100% security in preventing movement between connected components. This lock also prevents accidental loosening or removal of the bonnet assembly.

Low Emissions Outside Screw and Yoke (OS&Y)

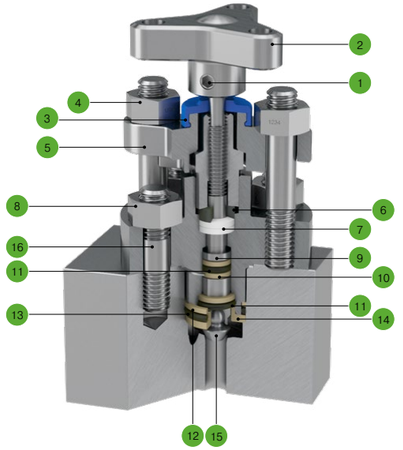

Reference	Description
1	Positive handle retention
2	Tri-lobe handle
3	Dust cap
4	Bridge nuts
5	Bridge (yoke)
6	Thrust bush
7	Gland packing (adjustable)
8	Stud nuts
9	Anti-blow-out spindle
10	Anti-extrusion ring
11	Elastomeric o-ring (stem seal)
12	Anti-extrusion ring
13	Elastomeric o-ring (body seal)
14	Bonnet end cap
15	Spindle tip
16	Body bonnet studding

Bill of Materials

Description	Stainless Steel	Carbon Steel	Duplex
Body	316/316L St.Stl ASTM A182-F316/F316L	ASTM A105 /A350-LF2	Duplex St.Stl ASTM A182-F51
End Connections and Flange Inserts	316/316L St.Stl ASTM A479 UNS S31600/S31603	ASTM A105 /A350-LF2	Duplex St.Stl ASTM A479 UNS S31803
Ball Valve Ball	316/316L St.Stl ASTM A479 UNS S31600/S31603		Duplex St.Stl ASTM A479 UNS S31803
Ball Valve Stems	316/316L St.Stl ASTM A479 UNS S31600/S31603		Duplex St.Stl ASTM A479 UNS S31803
Ball Valve Seats	PEEK		
Ball Valve Packing	Graphite		
Body Seals	316/316L St.Stl ASTM A479 UNS S31600/S31603 Graphite		6MO ASTM A479 UNS S31254
Needle Valve Stem	316/316L St.Stl ASTM A479 UNS S31600/S31603		Duplex St.Stl ASTM A479 UNS S31803
Needle Valve Tip	17/4 PH St.Stl ASTM A564/A564M UNS S17400		Super Duplex St.Stl ASTM A479 UNS S32750/S32760
Needle Valve Screwed Bonnet and Gland Adjuster	316/316L St.Stl ASTM A479 UNS S31600/S31603		Duplex St.Stl ASTM A479 UNS S31803
All other components	316 St.Stl		

Tel: +45 63 12 83 00 | Email: ps@hymatik.com | www.hymatik.com | Hvidkaervej 27a, DK-5250 Odense SV, Denmark

Low Emissions Pro-Bloc® - Modular Single Piece DBB Valve

FE Series - 15 mm Bore

Ordering Information

FEPB | **X** | **100** | **B** | **8F600** | **A3** | **FN**

Series	
Low Emissions Pro-Bloc® Class A	FEPB
Low Emissions Pro-Bloc® Class B	FEBPB

Ball Valve Bore Size	
15 mm	X

The standard outlet is 1/2" Female NPT

Material	
316 Stainless Steel/ 316L ASTM A182-F316/ F316L	B
Duplex A182-F51	E
Low Temp Carbon Steel ASTM A350 LF2/ ASTM A105	H
Super Duplex ASTM A182-F53/F55 *	F

* Available for arrangements 500 and 600.

Flange Details					
Flange Size		Flange Style		Flange Class	
1/2"	8	Raised Face Spiral	F	150	150
3/4"	12	Ring Type Joint	T	300, 600	600
1"	16			900	900
1 1/2"	24			1500	1500
2"	32			2500	2500

Valve Handle Options	
Anti Tamper Needle Valve Only	A*
Padlock Handle Locking	L*

* Insert valve number
1 = Primary
2 = Secondary
12 = Primary and Secondary
3 = Vent
4 = All

NB: Padlocks not supplied

Compliance	
Fire Safe & NACE	FN

Where fire safe is not required, the default stem packing will be PTFE.

Certification requirements and customer specifications MUST be provided at enquiry and order stage.

Arrangement			
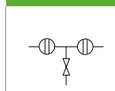		Block-Bleed-Block 1st Isolate: Ball 2nd Isolate: Ball Vent: Needle	100
		Block-Bleed-Block 1st Isolate: Ball 2nd Isolate: Ball Vent: Ball	120
		Block-Bleed 1st Isolate: Ball Vent: Needle	130
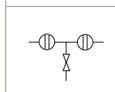		Block-Bleed-Block (Modular Construction) 1st Isolate: Ball 2nd Isolate: Ball Vent: Needle	500

Arrangement			
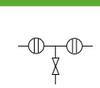		Block-Bleed-Block 1st Isolate: Ball 2nd Isolate: Ball Vent: Needle	200
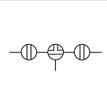		Block-Bleed-Block 1st Isolate: Ball 2nd Isolate: Ball Vent: Ball	220
		Block-Bleed-Block (Modular Construction) 1st Isolate: Ball 2nd Isolate: Ball Vent: Needle	600

Head Assembly Options



Anti-tamper spindle

This design valve head is to prevent accidental opening of the vent.

All valves with this anti-tamper spindle are supplied with a key.



T bar handle locking

This design valve head is to prevent unauthorised operation of the valve. The hole size is 6mm (0.24").

Padlocks are not provided.



Key

The Key is necessary to open or close the anti-tamper spindle (vent valve). The Key is also available to purchase as a separate item. Please note, image of the key is not to scale compared with the anti-tamper spindle.

Notes:

- Plugged vent 1/2" Female NPT as standard. 1/2" NPT plug supplied loose.
- All non wetted parts will be supplied in standard stainless steel for corrosion resistant alloys. For carbon steel construction trim materials will be supplied in stainless steel.
- For flange to flange construction when the required flanges are different sizes then specify both sizes example: 1st flange 1" pipe (16), raised face (F), class 900 (900), 2nd flange 1/2" (8), raised face (F), class 900 (900) insert: 16F9008F900. Consult factory for available combinations.
- All valves are graphite packed as standard, No PTFE option available
- All valves are Fire Safe as standard
- Materials are offered to NACE as standard.

Tel: +45 63 12 83 00 | Email: ps@hymatik.com | www.hymatik.com | Hvidkaervej 27a, DK-5250 Odense SV, Denmark

Pro-Bloc® - Three Piece DBB Valve

FP Series - Floating Ball

Overview

Parker's Pro-Bloc® FP series valves with floating ball design utilise both soft seats or metal seats for bubble-tight sealing at a wide range of pressures and temperatures.

The valves have double block and bleed function and consist of two separate isolating balls and one vent in a single unit. This three-piece construction offers space and weight saving benefits over the traditional method of using three separate valves in process piping applications. These valves (excluding 15 mm bore) are supplied to the API 6D standard.



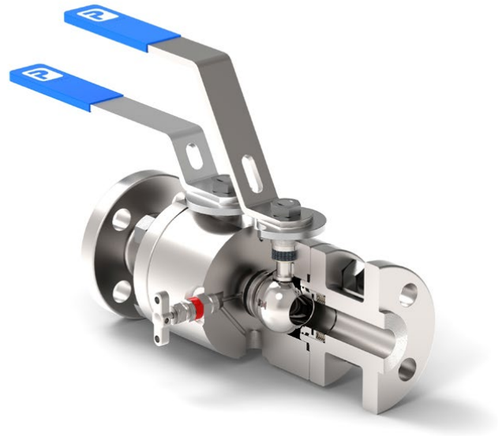

Markets / Applications:

- Petrochemical
- Low temperature and LNG (tankers, terminals, platforms, plants, air separation)
- Chemical
- Oil and Gas

Design Standards:

- Design: ASME B16.34, EEMUA 182
- Design pressure: ASME B16.34
- Body wall thickness: ASME B16.34, ASME VIII Div. I
- Fire safe: API 6FA and API 607

Technical Specifications:

Bore sizes	15 mm, 25 mm, 38 mm, 50 mm
Seat materials	TFM, PEEK, Metal
Body materials	316 Stainless Steel ASTM A182-F316/ UNS S31600 Duplex ASTM A182-F51 / UNS S31803 Super Duplex ASTM A182-F53/F55 Low Temp Carbon Steel ASTM A350 LF2 Alloy 625 UNS N06625 Alloy 825 UNS N08825
Valve configurations	Flange x screw Flange x flange
Max. Working Temperature	360°C
Min. Working Temperature	-196°C
Max. Working Pressure	6,250 PSI (431 bar)

Features, Benefits and Values

Feature	Benefit	Value
Three-piece design	Suitable for various piping configurations	Flexibility
Anti-blow-out stem	Valve integrity	Safety
Double D drive on stems	Facilitates correct lever realignment if removed	Ease of assembly
Cavity relief on seats	Over-pressure protection of ball cavity	Safety
Lockable handles option	Prevent accidental operation	Safety
Graphite packing to API 622	Low emission to atmosphere	Safety, performance and reliability
Fire safe design	Conforms to industry codes	Safety

Pressure vs. Temperature

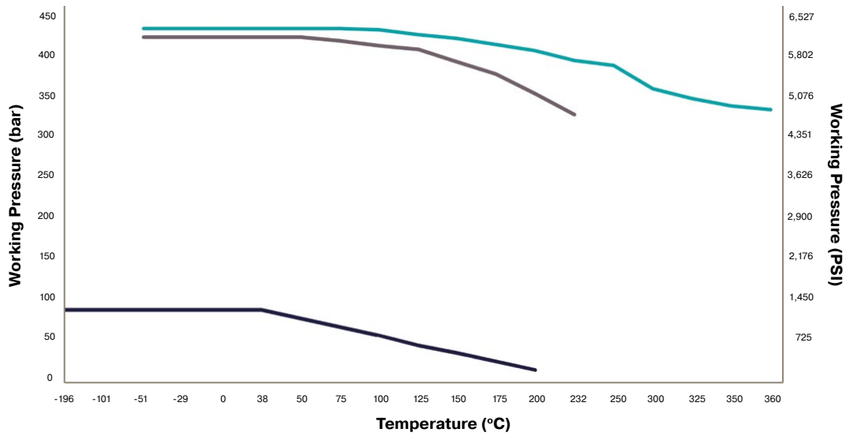

Tel: +45 63 12 83 00 | Email: ps@hymatik.com | www.hymatik.com | Hvidkaervej 27a, DK-5250 Odense SV, Denmark

Pro-Bloc® - Three Piece DBB Valve

FP Series - Floating Ball

Ordering Information

FP | **X** | **5** | **E** | **32T25** | **8A** | **M** | **A3L12** | **F**

Series	
Probloc® FP	FP

Ball Valve Bore Size	
15 mm	X
25 mm	V
38 mm	U
50 mm	T

	Style	
15, 25 mm Bore	Flange x Screw	5
15 - 50 mm Bore	Flange x Flange	6

Material	
316 Stainless Steel	B
Duplex	E
Super Duplex	F
Low Temp Carbon Steel	H
Alloy 625	M
Alloy 825	L

Arrangement		
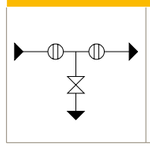		Block-Bleed-Block 1st Isolate: Ball 2nd Isolate: Ball Vent: Needle

* No part number designator required

Flange Details					
Flange Size		Flange Style		Flange Class	
15 mm Bore	1/2"	8	Raised Face Spiral	F	150	01
	3/4"	12	Ring Type Joint	T	300	03
	1"	16			600	06
	1 1/2"	24			900	09
	2"	32			1500	15
25 mm Bore	1"	16			2500	25
	1 1/2"	24				
	2"	32				
38 mm Bore	1 1/2"	24				
	2"	32				
	3"	48				
50 mm Bore	2"	32				
	3"	48				
	4"	64				

Outlet Connection		
15 mm Bore	1/2" Female NPT	*
	12 mm A-LOK®	M12A
	12 mm CPI™	M12Z
	1/2" A-LOK®	8A
	1/2" CPI™	8Z
25 mm Bore	1" Female NPT	*
	25 mm A-LOK®	M25A
	25 mm CPI™	M25Z
	1" A-LOK®	16A
	1" CPI™	16Z

* No part number designator required

Ball Valve Seats		
15, 25 mm Bore	Metal	M
38, 50 mm Bore	TFM	T
	PEEK	PB
	Metal	M

Condition	
Fire Safe Graphite packing	F
NACE	N
Fire Safe & NACE	FN

Valve Handle Options	
Anti-tamper (Needle valve only)	A*
Padlock handle locking	L*
Anti-tamper & Padlock handle locking	A*L*

* Insert valve number:
1 - Primary, 2 - Secondary, 3 - Vent, 4 - All.
Padlocks not supplied.
Fire Safe needle valve with locking device not available.

Standard Offering

Arrangement	Block-Bleed-Block
Outlet	• 1/2" NPT (F) - standard for 15 mm bore • 1" Female NPT - standard for 25 mm bore
Vent	1/2" NPT Female
Packing Material (Ball and Needle Valve)	Graphite API 622 standard with Fire safe design

Notes:

- All non-wetted parts will be supplied in standard stainless steel for corrosion resistant alloys. For carbon steel construction trim materials will be supplied in stainless steel.
- For flange x flange construction when the required flanges are different sizes, specify flange 1 details (flange size, flange style and flange class) followed by flange 2 details (flange size, flange style and flange class). For example: for flange 1 (flange size 1", Raised Face Spiral, Class 900) and flange 2 (flange size 1 1/2", Raised Face Spiral, Class 900) insert 16F0924F09.
- For customer specific options not covered here engineering will allocate a part number at quotation stage.
- Certification requirements and customer specifications MUST be provided at enquiry and order stage.

Tel: +45 63 12 83 00 | Email: ps@hymatik.com | www.hymatik.com | Hvidkaervej 27a, DK-5250 Odense SV, Denmark

Pro-Bloc® - Three Piece DBB Valve

TP Series - Trunnion Mount

Overview

Parker's Pro-Bloc® TP series trunnion mounted valves with a low operating torque are available with either soft or metal seat options for bubble-tight sealing, spanning a wide range of pressures and temperatures.

The valves have double block and bleed function and consist of two separate isolating balls and one vent in a single unit. This three-piece construction offers space and weight saving benefits over the traditional method of using three separate valves in process piping applications. These valves (excluding 15 mm bore) are supplied to the API 6D standard.



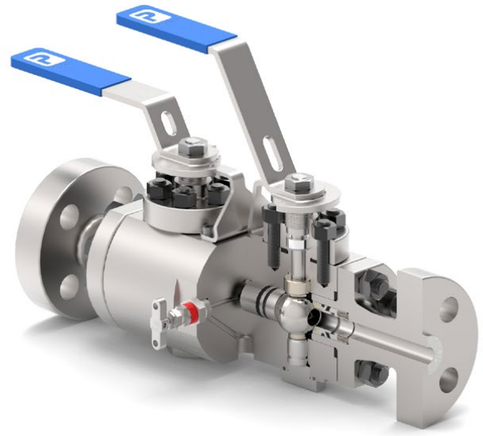

Markets / Applications:

- Petrochemical
- Low temperature and LNG (tankers, terminals, platforms, plants, air separation)
- Chemical
- Oil and Gas

Design Standards:

- Design: ASME B16.34, EEMUA 182
- Design pressure: ASME B16.34
- Body wall thickness: ASME B16.34, ASME VIII Div. I
- Fire safe: API 6FA and API 607

Technical Specifications

Bore sizes	15 mm, 25 mm, 38 mm, 50 mm
Seat materials	TFM, PEEK, Metal
Body materials	316 Stainless Steel ASTM A182-F316/ UNS S31600 Duplex ASTM A182-F51 / UNS S31803 Super Duplex ASTM A182-F53/F55 Low Temp Carbon Steel ASTM A350 LF2 Alloy 625 UNS N06625 Alloy 825 UNS N08825
Valve configurations	Flange x screw Flange x flange
Max. Working Temperature	360°C
Min. Working Temperature	-196°C
Max. Working Pressure	6,250 PSI (431 bar)

Features, Benefits and Values

Feature	Benefit	Value
Trunnion mount ball	Low operating torque Minimises seat wear and improves performance and service life	Ease of operation Performance and reliability
Three piece design	Suitable for various piping configurations	Flexibility
Anti-blow out stem	Valve integrity	Safety
Double D drive on stems	Facilitates correct lever realignment if removed	Ease of assembly
Cavity relief on seats	Over-pressure protection of ball cavity	Safety
Lockable handles option	Prevents accidental operation	Safety
Graphite packing to API 622	Low emission to atmosphere	Safety, performance and reliability
Fire safe design	Conforms to industry codes	Safety

Pressure vs. Temperature

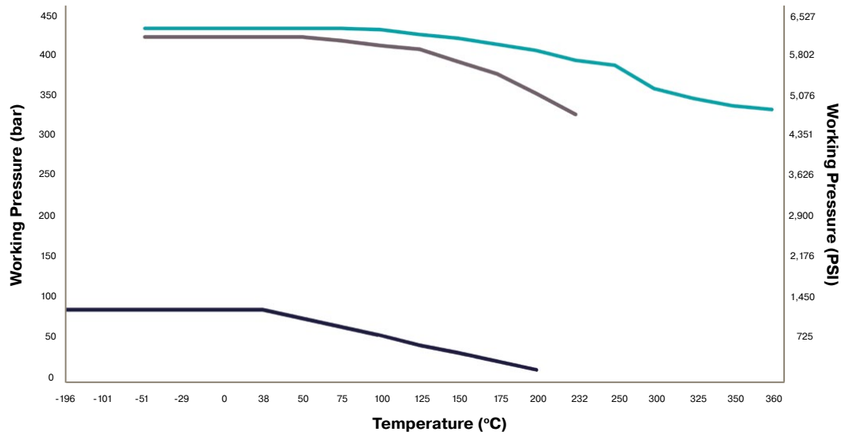

Tel: +45 63 12 83 00 | Email: ps@hymatik.com | www.hymatik.com | Hvidkaervej 27a, DK-5250 Odense SV, Denmark

Pro-Bloc® - Three Piece DBB Valve

TP Series - Trunnion Mount

Ordering Information

TP X 5 E 32T25 8A T A3L12 F

Series	
Probloc® TP	TP

Ball Valve Bore Size	
15 mm	X
25 mm	V
38 mm	U
50 mm	T

	Style	
15 - 25 mm Bore	Flange x Screw	5
15 - 50 mm Bore	Flange x Flange	6

Material	
316 Stainless Steel	B
Duplex	E
Super Duplex	F
Low Temp Carbon Steel	H
Alloy 625	M
Alloy 825	L

Arrangement		
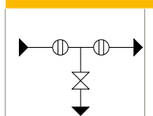	Block-Bleed-Block 1st Isolate: Ball 2nd Isolate: Ball Vent: Needle	*

* No part number designator required

Flange Details						
	Flange Size		Flange Style		Flange Class	
15 mm Bore	1/2"	8	Raised Face Spiral	F	150	01
	3/4"	12	Ring Type Joint	T	300	03
	1"	16			600	06
	1 1/2"	24			900	09
	2"	32			1500	15
25 mm Bore	1"	16			2500	25
	1 1/2"	24				
	2"	32				
38 mm Bore	1 1/2"	24				
	2"	32				
	3"	48				
50 mm Bore	2"	32				
	3"	48				
	4"	64				

	Outlet Connection	
15 mm Bore	1/2" Female NPT	*
	12 mm A-LOK®	M12A
	12 mm CPI™	M12Z
	1/2" A-LOK®	8A
	1/2" CPI™	8Z
25 mm Bore	1" Female NPT	*
	25 mm A-LOK®	M25A
	25 mm CPI™	M25Z
	1" A-LOK®	16A
	1" CPI™	16Z

* No part number designator required

Ball Valve Seats	
TFM	T
PEEK	PB
Metal	M

Condition	
Fire Safe Graphite packing	F
NACE	N
Fire Safe & NACE	FN

Valve Handle Options	
Anti-tamper (Needle valve only)	A*
Padlock handle locking	L*
Anti-tamper & Padlock handle locking	A*L*

* Insert valve number:
1 - Primary, 2 - Secondary, 3 - Vent, 4 - All.
Padlocks not supplied.
Fire Safe needle valve with locking device not available.

Standard Offering

Arrangement	Block-Bleed-Block
Outlet	• 1/2" Female NPT - standard for 15 mm bore • 1" Female NPT - standard for 25 mm bore
Vent	1/2" NPT Female
Packing Material (Ball and Needle Valve)	Graphite API 622 standard with Fire safe design

Notes:

- All non-wetted parts will be supplied in standard stainless steel for corrosion resistant alloys. For carbon steel construction trim materials will be supplied in stainless steel.
- For flange x flange construction when the required flanges are different sizes, specify flange 1 details (flange size, flange style and flange class) followed by flange 2 details (flange size, flange style and flange class). For example: for flange 1 (flange size 1", Raised Face Spiral, Class 900) and flange 2 (flange size 1 1/2", Raised Face Spiral, Class 900) insert 16F0924F09.
- For customer specific options not covered here engineering will allocate a part number at quotation stage.
- Certification requirements and customer specifications MUST be provided at enquiry and order stage.

Tel: +45 63 12 83 00 | Email: ps@hymatik.com | www.hymatik.com | Hvidkaervej 27a, DK-5250 Odense SV, Denmark

Pro-Bloc® - Modular Single Piece DBB Valve API 6A

API 6A Standard - Introduction

Offshore and Onshore Safety Measures

API valves are lightweight and compact, which is essential for both offshore and onshore installations. They can be easily installed to existing designs and offer low cost fabrication.

One concern on platforms, is the pressure in the voids between the anulas casing strings of a well – any sudden increase or change could indicate leaks in the casing strings or cement bonding.

There is consequently now a growing trend to monitor the pressure in each void, so that operators can gain early warning of impending problems and implement emergency shutdown procedures to avoid disaster.

The need for improved annular casing pressure management is becoming more acute as operators of onshore and offshore oil and gas platforms move into deeper environments and encounter higher reservoir pressures and temperatures – and it is one of the reasons why the UK's Health and Safety Executive is urging operators to adopt its guidelines for well integrity.

The issue is not just confined to the offshore sector. Energy companies are being forced to drill to greater depths at many onshore exploration sites now that the shallow layers of oil and gas reservoirs have been substantially exploited, which again involves higher operating pressures.

Testing

Parker's double block and bleed valves have been tested for conformance to API 6A specifications by an independent test house, as well as by the internal test laboratory that Parker operates at its European design and manufacturing facility in Barnstaple, UK.

Applications

- Christmas tree and wellhead (see illustration on opposite page)
- HIPPS (High Integrity Pressure Protection System) for use in wellhead flowline pressure protection

API 6A Codes and Practises

Ball Valve Design Compliance

- Single piece, close to shape forging - API 6A minimum yield material compliance - PSL 3/3G tested
- Hub ended single piece forged body - API 6A minimum yield material compliance - PSL 3/3G tested
- Body and enclosure items NDE tested to API 6A - PSL 3/3G
- Valve assemblies tested to PSL 3/3G with serialization
- Firesafe designed and tested to API 6FA / API 607 at 15,000 psi
- PSL 4 - Material and valve testing compliance upon request. Contact Factory.
- API 6A PR2 Qualification on 15K Ball Valve PAI Seats. -46°C to + 121°C
- Anti-static design

Needle Valve Design Compliance

- Bolted bonnet [enclosures] with anti-blow out stem. API 6A- 60K minimum yield material compliance - PSL 3/3G tested
- Body and enclosure items NDE tested to API 6A - PSL 3/3G
- PTFE - Primary packing with firesafe backup graphite packing
- Firesafe designed and tested to API 6FA at 10,000 psi. Qualified up to 15,000 psi
- PSL 4 - Material and valve testing compliance upon request. Contact Factory.

Design Codes

- API 6A / ISO 10423 - Allowable stress Sm= 2/3Sy where Sy is the material minimum yield strength
- API 6A / ISO 10423 - (Flange Dimensions)
- ISO 17292
- Firesafe designed and tested to API 6FA / API 607 at 10,000 psi - (10K Ball Valve)
- Firesafe designed and tested to API 6FA at 10,000 psi. Qualified up to 15,000 psi - (Needle Valves)
- Firesafe designed and tested to API 6FA / API 607 at 15,000 psi - (15K Ball Valve)
- ANSI/ASME B1.20.1 (Threads)
- Fugitive Emissions Qualification to ISO 15848- Parts 1 & 2 - Class B. Temperature range -46°C to + 121°C (Ball Valve and Needle Valve)

Christmas Tree

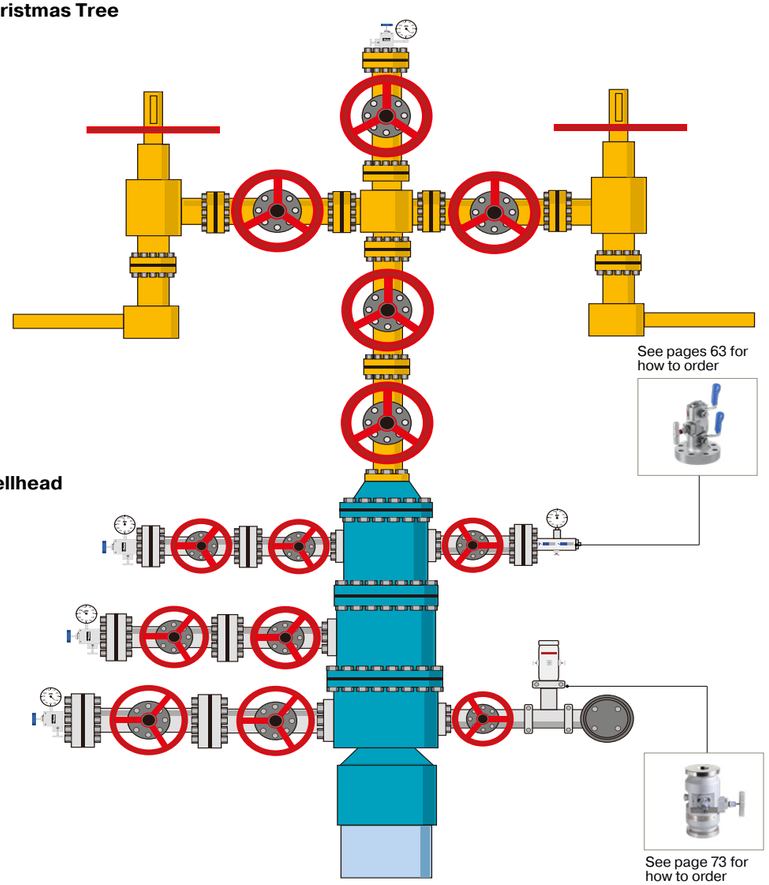

See pages 63 for how to order

Wellhead

See page 73 for how to order

Tel: +45 63 12 83 00 | Email: ps@hymatik.com | www.hymatik.com | Hvidkaervej 27a, DK-5250 Odense SV, Denmark

Pro-Bloc® - Modular Single Piece DBB Valve API 6A

API 6A Codes and Practises

Parker's API valves have been designed in partnership with many of the world's leading energy companies. Pictured here, are just a few of the designs that we have innovated for projects around the world.







API 6A - Quality control for bodies, bonnets, end and outlet connections PSL 3/3G - Parker Compliance

		API Product Specification Level	Additional Industry Codes
PSL3/3G material testing includes:	Tensile testing	PSL 3/3G	ASTM A370
	Impact testing	PSL 3/3G	ASTM A370
PSL3/3G NDE includes:	Dimensional inspection	To Parker standard	
	Traceability	PSL 3/3G	
	Chemical analysis	PSL 3/3G	ASTM A388
	Volumetric NDE	PSL 3/3G	ASTM E165 / ASTM E709
	Surface NDE	PSL 3/3G	
	Serialization	PSL 3/3G	
Ferritoscope:	On request	To Parker standard	
NORSOK M630 Additional testing includes*:	Corrosion testing		
	Micrographic examination		ASTM G48
	Ferrite counting		ASTM A923
	* (Duplex and Super Duplex materials only)		ASTM E562

Typical Raw Material Specifications

Material	Product	Industry Codes	NORSOK	NACE	API Product Specification Level
Duplex	Close Shape Flanged Design	ASTM A182 Grade F51	NORSOK M650/ M630	NACE MR0175	PSL3
	Hubbed Design	ASTM A182 Grade F51	NORSOK M650/ M630	NACE MR0175	PSL3
	Trims such as Bonnets, end and outlet connections	ASTM A479/A276 UNS S31803	NORSOK M650/ M630	NACE MR0175	PSL3
Super Duplex	Close Shape Flanged Design	ASTM A182 Grades F53/ F55		NACE MR0175	PSL3
	Hubbed Design	ASTM A182 Grades F53/ F55	NORSOK M650/ M630	NACE MR0175	PSL3
	Trims such as Bonnets, end and outlet connections	ASTM A479/A276 UNS S32750/S32760	NORSOK M650/ M630	NACE MR0175	PSL3
	15K Ball Valve OSY Bridge	ASTM A995 Grade 6A – UNS J93380		NACE MR0175	PSL3
Alloy 725	Close Shape Flanged Design	ASTM B637 Grade UNS N07725		NACE MR0175	PSL3
Alloy 625	Close Shape Flanged Design	ASTM B564 Grade UNS N06625		NACE MR0175	PSL3
	Hubbed Design	ASTM B564 Grade UNS N06625		NACE MR0175	PSL3
	Trims such as Bonnets, end and outlet connections	ASTM B446 Grade UNS N06625		NACE MR0175	PSL3
Alloy 718	Trims such as Bonnets, end and outlet connections	API 6A UNS N07718		NACE MR0175	PSL3

Pressure / Temperature Chart

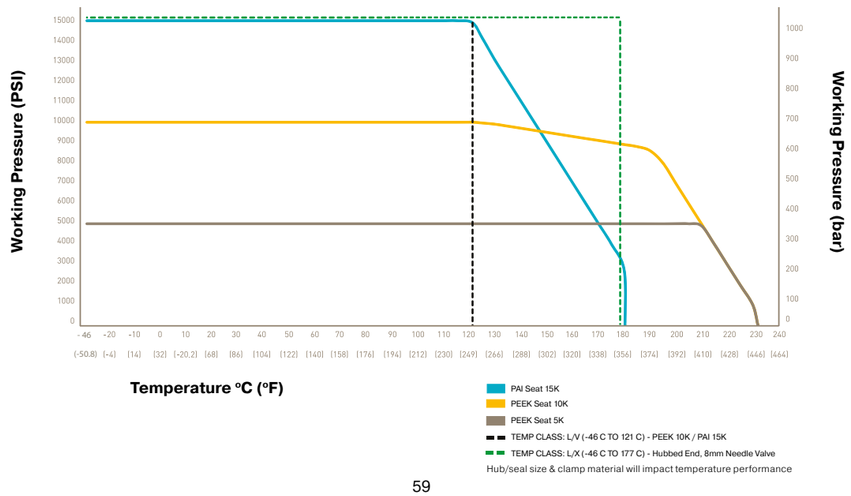

Hub/seal size & clamp material will impact temperature performance

Tel: +45 63 12 83 00 | Email: ps@hymatik.com | www.hymatik.com | Hvidkaervej 27a, DK-5250 Odense SV, Denmark

Pro-Bloc® - Modular Single Piece DBB Valve API 6A

5K and 10K - API 6A

Overview

Parker's uni directional quarter turn ball valve anti-static design is based on the Hi-Pro® ball valves series which has been used in the field on many services over a twenty-year time span. Just like the Hi-Pro®, the API 6A design incorporates slotted seats. This gives inherent cavity relief preventing over pressure occurring within the ball/seat cavity when the valve is in the closed position. The stem itself is a blow-out proof design. The valves are a straight through bore that helps to prevent "plugging" of the bore.



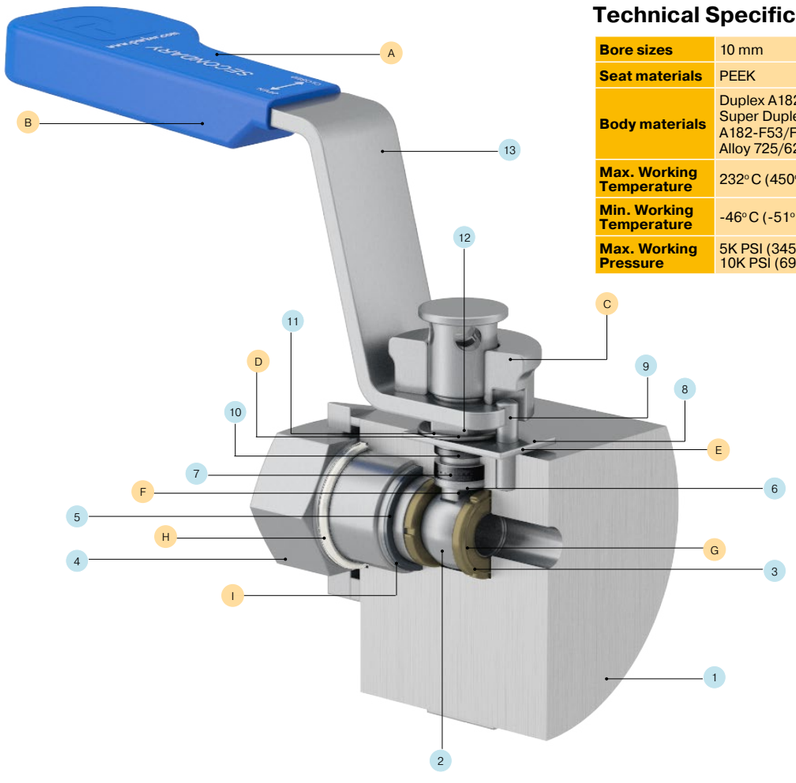

Technical Specifications

Bore sizes	10 mm
Seat materials	PEEK
Body materials	Duplex A182-F51 Super Duplex ASTM A182-F53/F55 Alloy 725/625
Max. Working Temperature	232° C (450° F)
Min. Working Temperature	-46° C (-51° F)
Max. Working Pressure	5K PSI (345 bar), 10K PSI (690 bar)

Bill of Materials

Reference	Description	Duplex	Super Duplex	Alloy 625	PSL 3/3G
1	Body (Hub)	A182-F51	A182-F53/F55	ASTM B564 Gr. N06625	YES
1	Body (Flange)	A182-F51	A182-F53/F55	Alloy 725 - ASTM B637 Gr. N07725 with 625 Trim	YES
2	Ball	A479-UNS S31803	A479-UNS S32750/S32760	ASTM B446 Gr. N06625	YES
3	Seats	PEEK	PEEK	PEEK	
4	End Adaptor	A479-UNS S31803	A479-UNS S32750/S32760	ASTM B446 Gr. N06625	YES
5	Joint Seal	6mo	ASTM B446 Gr. N06625	ASTM B446 Gr. N06625	
6	Stem	A479-UNS S31803	A479-UNS S32750/S32760	ASTM B446 Gr. N06625	YES
7	Packing	Graphite	Graphite	Graphite	
8	Ant-torque plate	316 St.Stl	316 St.Stl	316 St.Stl	
9	Stop Pin	316 St.Stl	316 St.Stl	316 St.Stl	
10	Thrust Bush	316 St.Stl	316 St.Stl	316 St.Stl	
11	Spring Washer	X12CrNi17 7 (DIN 1.4310)	X12CrNi17 7 (DIN 1.4310)	X12CrNi17 7 (DIN 1.4310)	
12	Spindle Nuts	A4. St.Stl	A4. St.Stl	A4. St.Stl	
13	Handle	316 St.Stl	316 St.Stl	316 St.Stl	

Note: NPT & Autoclave plugs/glands are not PSL3 tested as standard.

Features, Benefits and Values

Reference	Feature	Benefit	Value
A	Identification of primary and secondary valves	Removes possibility of operating error	Safety
B	Ergonomic vinyl sleeve	Easy to grip	Ease of operation
C	Handle locking mechanism	Enables the valve to be locked in either the open or closed position	Safety
D	EEMUA 182 Locking Nut	Ensures packing integrity if handle needs to be removed	Performance and reliability
E	Torque plate	Reduces operational torque on packing	Ease of operation
F	Anti blow out stem	Prevents stem blow out	Safety
G	Slotted seats	Inherent cavity relief	Safety
H	Environmental seal	Preventing aggressive dirt and moisture	Performance and reliability
I	Primary metallic atmospheric seal	No elastomers, therefore no seal deterioration	Performance and reliability

Tel: +45 63 12 83 00 | Email: ps@hymatik.com | www.hymatik.com | Hvidkaervej 27a, DK-5250 Odense SV, Denmark



Pro-Bloc® - Modular Single Piece DBB Valve API 6A

Ordering Information - 5K and 10K

APB	Y	1	00	E33T10K	9C		L	FN

Series

API Pro-Bloc	APB

Ball Valve Bore Size

10 mm	Y

Style

Flange x Screw	1
Flange x Flange	2

Arrangement

Block Bleed Block 1st Isolate: Ball Vent: Needle 2nd Isolate: Ball	00
Block and Bleed 1st Isolate: Ball Vent: Needle	30

Process / Instrument Connection

Material		Flange Size		Face Style		Flange Class	
Duplex	E	2 - 1/16"	33	Ring Type Joint	T	5,000 PSI (6B)	5K
		1 - 13/16"	29			10,000 PSI (6BX)	10K
		2 - 1/16"	33				
		2 - 9/16"	41				
Super Duplex	F	2 - 1/16"	33			5,000 PSI (6B)	5K
		1 - 13/16"	29			10,000 PSI (6BX)	10K
		2 - 1/16"	33				
		2 - 9/16"	41				
725/625	Q	2 - 1/16"	33			5,000 PSI (6B)	5K
		1 - 13/16"	29			10,000 PSI (6BX)	10K
		2 - 1/16"	33				
		2 - 9/16"	41				

Outlet / Vent Connection

1/2" FNPT	-
9/16" MP Autoclave	9C
3/8" MP Autoclave	6C

Valve Handle Options

Padlock Handle Locking Primary and Secondary Ball Valve	L

Condition

Fire Safe	F
NACE	N
Fire Safe & NACE	FN

Notes:
- PEEK seat as standard
- If 1/2" Female NPT outlet is selected then vent connection is 1/2"Female NPT only. No connection designator required



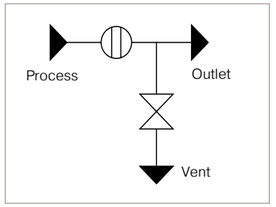

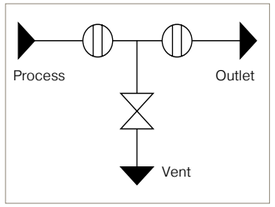

Tel: +45 63 12 83 00 | Email: ps@hymatik.com | www.hymatik.com | Hvidkaervej 27a, DK-5250 Odense SV, Denmark

Live Loaded Pro-Bloc® - Modular Single Piece DBB Valve - API 6A

5K, 10K and 15K - API 6A



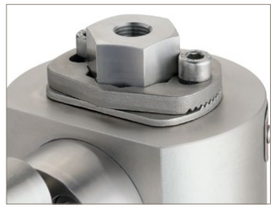

Overview

In addition to the features mentioned for the 5K and 10K ball valve design, the stem packing is live loaded graphite. The live loading maintains a constant pressure on the stem packing compensating for any potential wear during the valve's lifetime. In turn it also improves the efficiency of the sealing capabilities. These valves have passed extensive third party testing to gain ISO 15848-1 certification.

Tru-Loc® Mechanical Sealed End Connection

Designed specifically for Pro-Bloc® end connection security. Extensive tests have proved that end connections locked with the Tru-Loc® end connector locking mechanism give 100% security and prevent end connector movement when disconnecting instruments or connectors. This ensures that the ball seat is securely positioned at all times.

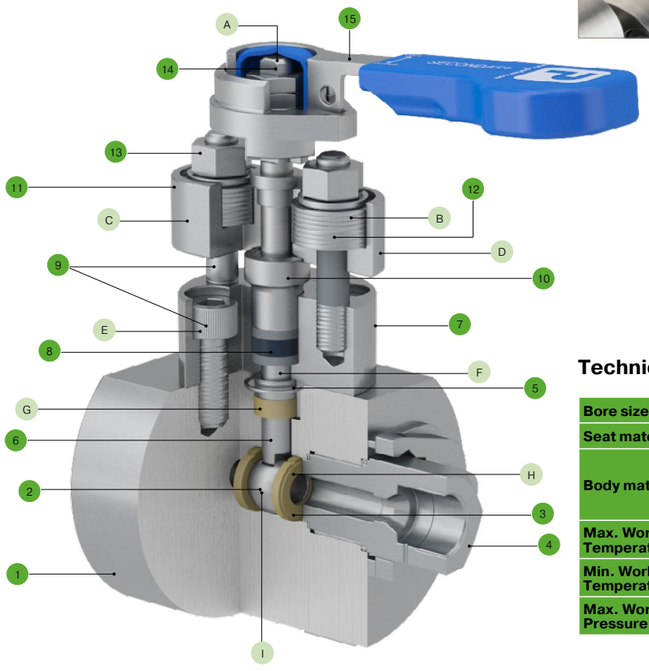

Technical Specifications

Bore sizes	10 mm
Seat materials	PAI
Body materials	Duplex A182-F51 Super Duplex ASTM A182-F53/F55 Alloy 625
Max. Working Temperature	180°C (356 °F)
Min. Working Temperature	-46°C (-51°F)
Max. Working Pressure	15K PSI (1034 bar)

Bill of Materials

Reference	Description	Duplex	Super Duplex	625/725	PSL 3/3G
1	Body (Hub)	A182-F51	A182-F53/F55	ASTM B564 Gr. N06625	YES
1	Body (Flange)	A182-F51	A182-F53/F55	Alloy 725 - ASTM B637 Gr. N07725 with 625 Trim	YES
2	Ball	A479-UNS S32750/S32760	A479-UNS S32750/S32760	Alloy 718 API	YES
3	Seats	PAI	PAI	PAI	
4	End Adaptor	A479-UNS S31803	A479-UNS S32750/S32760	ASTM B446 Gr. N06625	YES
5	Joint Seal	6mo	Alloy 625	Alloy 625	
6	Stem	A479-UNS S32750/S32760	A479-UNS S32750/S32760	Alloy 718 API	YES
7	Bonnet	A479-UNS S31803	A479-UNS S32750/S32760	ASTM B446 Gr. N06625	YES
8	Packing	Graphite	Graphite	Graphite	
9	Studs	ASTM A453 GR.660D	ASTM A453 GR.660D	ASTM A453 GR.660D	
10	Thrust Bush	A479-UNS S31803	A479-UNS S32750/S32760	ASTM B446 Gr. N06625	
11	OSY Bridge	Super Duplex ASTM A995 Gr. 6A	Super Duplex ASTM A995 Gr. 6A	Super Duplex ASTM A995 Gr. 6A	
12	Spring Washer	X12CrNi17 7 (DIN 1.4310)	X12CrNi17 7 (DIN 1.4310)	X12CrNi17 7 (DIN 1.4310)	
13	OSY Nuts	ASTM A453 GR.660D	ASTM A453 GR.660D	ASTM A453 GR.660D	
14	Spindle Nuts	A4. St.Stl	A4. St.Stl	A4. St.Stl	
15	Handle	316 St.Stl	316 St.Stl	316 St.Stl	

Note: NPT & Autoclave plugs/glands are not PSL3 tested as standard.

Features, Benefits and Values

Reference	Feature	Benefit	Value
A	Handle locking mechanism	Enables the valve to be locked in either the open or closed position	Safety
B	Bevel washers (coned disk spring) for live loading of packing	Compensates for wear of the packing, preventing stem leakage (FE Class B)	Safety, performance and reliability
C	Yoke (bridge) is manufactured from Super Duplex casting as standard	API 6A material compliant	Safety
D	Proprietary high pressure graphite packing with corrosion inhibitor	Fire safe	Safety
E	Bolted bonnet	Removes mechanical hold threads from the process media	Performance and reliability
F	Anti blow out stem	Prevents stem blow out	Safety
G	Primary metallic atmospheric seal	No elastomers, therefore no seal deterioration	Performance and reliability
H	Slotted seats	Provides equalization of cavity pressure	Performance and reliability
I	Vented ball	Ensures body cavity relief is achieved	Safety

Tel: +45 63 12 83 00 | Email: ps@hymatik.com | www.hymatik.com | Hvidkaervej 27a, DK-5250 Odense SV, Denmark

Live Loaded Pro-Bloc® - Modular Single Piece DBB Valve - API 6A

5K, 10K and 15K - API 6A

The Parker heavy duty needle valve has been extensively used both offshore and onshore, including sour gas fields. The two piece stem ensures the tip does not rotate on closure ensuring a gas tight shut off with no opportunity for seat damage or galling. The packing itself is below the stem threads protecting them from the media and ensuring the thread lubricant is not “washed out”.

The stem packing is a combination of PTFE and high purity graphite which is live loaded to reduce the need for packing adjustment. A protective cap is secured above the threads to prevent ingress of moisture or dirt. The valve has a bolted bonnet construction which is stronger, safer and more reliable than a screwed bonnet design. The sealing between bonnet and head unit is a metal seal for increased durability and increased operating life. The handle is held firmly into the top of the stem with an anti-vibration design to prevent the handle becoming loose in operation.



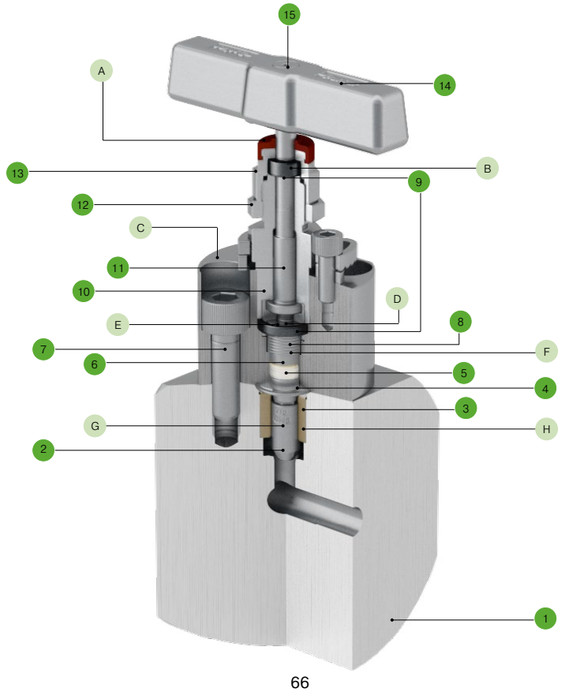

Bill of Materials

Reference	Description	Duplex	Super Duplex	625	PSL 3/3G
1	Body (Hub)	A182-F51	A182-F53/F55	ASTM B564 Gr. N06625	YES
1	Body (Flange)	A182-F51	A182-F53/F55	Alloy 725 - ASTM B637 Gr. N07725 with 625 Trim	YES
2	Lower Stem	A479-UNS S32750/S32760	ASTM B446 Gr. N06625	Alloy 718 API	YES
3	Stem Guide	PEEK	PEEK	PEEK	
4	Joint Seal	6mo	ASTM B446 Gr. N06625	ASTM B446 Gr. N06625	
5	Packing	P.T.F.E	P.T.F.E	P.T.F.E	
6	Thrust Bush	A479-UNS S31803	A479-UNS S32750/S32760	ASTM B446 Gr. N06625	
7	Bonnet Studs	ASTM A453 GR.660D	ASTM A453 GR.660D	ASTM A453 GR.660D	
8	Spring Washer	X12CrNi17 7 (DIN 1.4310)	X12CrNi17 7 (DIN 1.4310)	X12CrNi17 7 (DIN 1.4310)	
9	Firesafe Packing	Graphite	Graphite	Graphite	
10	Gland Adjuster	A479-UNS S31803	A479-UNS S32750/S32760	ASTM B446 Gr. N06625	YES
11	Upper Stem	A479-UNS S31803	A479-UNS S32750/S32760	ASTM B446 Gr. N06625	YES
12	Bolted Bonnet	A479-UNS S31803	A479-UNS S32750/S32760	ASTM B446 Gr. N06625	YES
13	Firesafe Gland	A479-UNS S31803	A479-UNS S32750/S32760	ASTM B446 Gr. N06625	YES
14	Handle	316 St.Stl	316 St.Stl	316 St.Stl	
15	Handle Screw	316 St.Stl	316 St.Stl	316 St.Stl	

Notes:

- NPT & Autoclave plugs/glands are not PSL3 tested as standard.
- When API 6A Integral flange is selected, body material changes to Alloy 725 [ASTM B637 Gr. N07725] with 625 Trim.

Features, Benefits and Values

Reference	Feature	Benefit	Value
A	Protective cap	Secured above the threads to prevent ingress of moisture or dirt	Durability
B	Fire safe / environmental seal	Fire safe	Safety
C	Bolted bonnet	Removes mechanical hold threads from the process media	Performance and reliability
D	Anti blow out stem	Prevents stem blow out	Safety
E	Two piece stem	Lower stem non rotational for increased cycle life and improved seal ability, preventing damage to seat	Safety, performance and reliability
F	Bevel washers (coned disk spring) for live loading of packing	Compensates for wear of the packing, preventing stem leakage and compensates for temperature cycling	Performance and reliability
G	PEEK guide bush	Aides with centering of tip	Performance
H	Primary metallic atmospheric seal	No elastomers, therefore no seal deterioration	Performance and reliability

Tel: +45 63 12 83 00 | Email: ps@hymatik.com | www.hymatik.com | Hvidkaervej 27a, DK-5250 Odense SV, Denmark

Live Loaded Pro-Bloc® - Modular Single Piece DBB Valve - API 6A

Ordering Information - 5K, 10K and 15K

APBL Y 1 00 F29T15K 9C L FN B

Series	
API Pro-Bloc	APBL

Ball Valve Bore Size	
10 mm	Y

Style	
Flange x Screw	1
Flange x Flange	2

Arrangement	
Block Bleed Block 1st Isolate: Ball Vent: Needle 2nd Isolate: Ball	00
Block and Bleed 1st Isolate: Ball Vent: Needle	30

Outlet / Vent Connection	
1/2" Female NPT [1]	*
9/16" MP Autoclave	9C
3/8" MP Autoclave	6C

[1] 5K and 10K valves only.

Valve Handle Options	
Padlock Handle Locking Primary and Secondary Ball Valve	L

Condition	
Fire Safe	F
NACE	N
Fire Safe & NACE	FN

Condition 2	
FE Class B	B

Note, if FE is not required B is not necessary, the valve design remains the same, no FE production testing will be conducted.

Process / Instrument Connection							
Material		Flange Size		Face Style		Flange Class	
5,000 PSI							
Duplex	E	2 - 1/16"	33	Ring Type Joint	T	5,000 PSI (6B)	5K
Super Duplex	F						
725/625	Q						
10,000 PSI							
Duplex	E	1 - 13/16"	29	Ring Type Joint	T	10,000 PSI (6BX)	10K
		2 - 1/16"	33				
		2 - 9/16"	41				
Super Duplex	F						
725/625	Q	1 - 13/16"	29				
		2 - 1/16"	33				
		2 - 9/16"	41				
15,000 PSI							
Super Duplex	F	1 - 13/16"	29	Ring Type Joint	T	15,000 PSI (6BX)	15K
		2 - 1/16"	33				
725/625	Q	1 - 13/16"	29				
		2 - 1/16"	33				

Notes:

- PAI seat as standard
- If 1/2" Female NPT outlet is selected then vent connection is 1/2"Female NPT only. No connection designator required



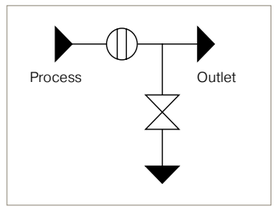

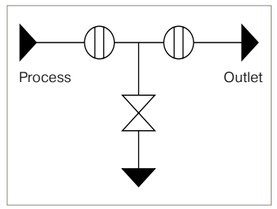

Pro-Bloc® - API 6A Grayloc® Hub Connection

Ball - Needle Design

Ordering Information - 10K

APB Y 1 00 E24G11 10K 9C L FN

Series	
API Pro-Bloc	APB

Ball Valve Bore Size	
10 mm	Y

Style	
Hub x Screw	1
Hub x Hub	2

Arrangement	
Block Bleed Block 1st Isolate: Ball Vent: Needle 2nd Isolate: Ball	00
Block and Bleed[1] 1st Isolate: Ball Vent: Needle	30

1. The hub x hub outlet end will also include a female 9/16 MP Autoclave Connection

Pressure Rating	
10K PSI	10K

Outlet / Vent Connection[2]	
1/2" Female NPT	-
9/16" MP Autoclave	9C
3/8" MP Autoclave	6C

2. The female medium pressure vent is supplied with a plug.

Condition	
Fire Safe	F
NACE	N
Fire Safe & NACE	FN

Valve Handle Options	
Padlock Handle Locking Primary and Secondary Ball Valve	L

Process / Instrument Connection[1]							
*Clamp & Bolt Material	Material		Hub Size			Seal Size	
AISI 4140 Clamp & A320-L7 Bolting	Duplex	E	1 - 1/2"	24	Hub	G	Seal 11	11
			1 - 1/2"	24			Seal 14	14
			2"	32			Seal 11	11
			2"	32			Seal 13	13
			2"	32			Seal 14	14
			2"				Seal 16	16
	Super Duplex	F	2"	32			Seal 14	14
			2"	32			Seal 16	16
			2"	32			Seal 20	20
			2"	32	Heavy Duty Hub	B	Seal 14	14
A182-F304 Clamp & A320-B8 Bolting	625	M	1 - 1/2"	24	Hub	G	Seal 11	11
			2"	32			Seal 11	11
			2"	32			Seal 13	13
			2"	32	Heavy Duty Hub	B	Seal 14	14

Notes:

- If 1/2" Female NPT outlet is selected then vent connection is 1/2"Female NPT only. No connection designator required.
- Hub/Seal size selection shown is based on the overall combined pressure capability of base material with the clamp and bolt materials as listed.
- Hub ended valves are NOT supplied with seals, clamps and bolts as standard.



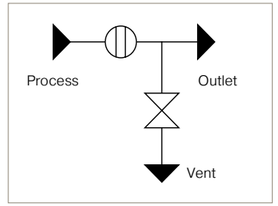

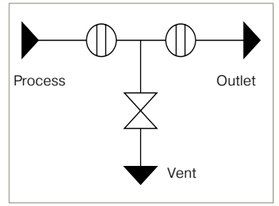

Tel: +45 63 12 83 00 | Email: ps@hymatik.com | www.hymatik.com | Hvidkaervej 27a, DK-5250 Odense SV, Denmark

Live Loaded Pro-Bloc® - API 6A Grayloc® Hub Connection

Ball - Needle Design

Ordering Information - 10K and 15K

APB **Y** **1** **00** **E24G1110K** **9C** **L** **FN** **B**

Series	
API Pro-Bloc	APB

Ball Valve Bore Size	
10 mm	Y

Style	
Hub x Screw	1
Hub x Hub	2

Arrangement	
Block Bleed Block 1st Isolate: Ball Vent: Needle 2nd Isolate: Ball	00
Block and Bleed 1st Isolate: Ball Vent: Needle	30

Process / Instrument Connection											
*Clamp & Bolt Material	Material		Hub Size						Pressure Rating	
10,000 PSI										
AISI 4140 Clamp & A320-L7 Bolting	Duplex	E	1 - 1/2"	24	Hub	G	Seal 11	11	10,000 PSI	10K
			1 - 1/2"	24			Seal 14	14		
			2"	32			Seal 11	11		
			2"	32			Seal 13	13		
			2"	32			Seal 14	14		
			2"	32			Seal 16	16		
			2"	32	Heavy Duty Hub	B	Seal 14	14		
	Super Duplex	F	1 - 1/2"	24	Hub	G	Seal 11	11		
			1 - 1/2"	24			Seal 14	14		
			2"	32			Seal 11	11		
			2"	32			Seal 13	13		
			2"	32			Seal 14	14		
			2"	32			Seal 16	16		
			2"	32			Seal 20	20		
			2"	32	Heavy Duty Hub	B	Seal 14	14		
A182-F304 Clamp & A320-B8 Bolting	625	M	1 - 1/2"	24	Hub	G	Seal 11	11		
			2"	32			Seal 11	11		
			2"	32			Seal 13	13		
			2"	32	Heavy Duty Hub	B	Seal 14	14		
15,000 PSI										
AISI 4140 Clamp & A320-L7 Bolting	Duplex	E	1 - 1/2"	24	Hub	G	Seal 11	11	15,000 PSI	15K
			2"	32			Seal 11	11		
			2"	32			Seal 13	13		
			2"	32			Seal 14	14		
			2"	32	Heavy Duty Hub	B	Seal 14	14		
AISI 4140 Clamp & A320-L7 Bolting	Super Duplex	F	1 - 1/2"	24	Hub	G	Seal 11	11		
			2"	32			Seal 11	11		
			2"	32			Seal 13	13		
			2"	32			Seal 14	14		
			2"	32			Seal 16	16		
			2"	32	Heavy Duty Hub	B	Seal 14	14		
A182-F304 Clamp & A320-B8 Bolting	625	M	1 - 1/2"	24	Hub	G	Seal 11	11		
			2"	32			Seal 11	11		
			2"	32	Heavy Duty Hub	B	Seal 14	14		

Outlet / Vent Connection[1]	
1/2" Female NPT [2]	*
9/16" MP Autoclave	9C
3/8" MP Autoclave	6C

1. The vent connection is supplied with a plug.
2. 10K valves only.

Valve Handle Options	
Padlock Handle Locking Primary and Secondary Ball Valve	L

Condition	
Fire Safe	F
NACE	N
Fire Safe & NACE	FN

Condition 2	
FE Class B	B

Note, if FE is not required B is not necessary, the valve design remains the same, no FE production testing will be conducted.

Notes:
- If 1/2" Female NPT outlet is selected then vent connection is 1/2"Female NPT only. No connection designator required.
- Hub/Seal size selection shown is based on the overall combined pressure capability of base material with the clamp and bolt materials as listed
- Hub ended valves are NOT supplied with seals, clamps and bolts as standard



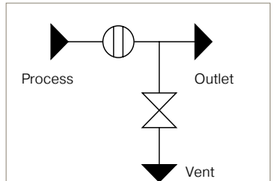

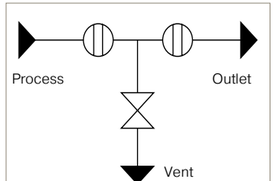

Tel: +45 63 12 83 00 | Email: ps@hymatik.com | www.hymatik.com | Hvidkaervej 27a, DK-5250 Odense SV, Denmark

Live Loaded Pro-Bloc® API 6A - Grayloc® Hub Connection

Needle Design

Ordering Information - 10K and 15K

APB | **2** | **N3** | **F32B14** | **9C** | **FN** | **B**

Series	
API Pro-Bloc	APB

Style [1]	
Hub x Screw	1
Hub x Hub	2

1. The hub x hub outlet end will also include a female 9/16" MP Autoclave Connection

Arrangement	
Block Bleed Block 1st Isolate: Needle Vent: Needle 2nd Isolate: Needle	N3
Block and Bleed 1st Isolate: Needle Vent: Needle	N2

Outlet / Vent Connection [1]	
1/2" Female NPT [2]	*
9/16" MP Autoclave	9C
3/8" MP Autoclave	6C

1. The vent connection is supplied with a plug.
2. 10K valves only.

Condition	
Fire Safe	F
NACE	N
Fire Safe & NACE	FN

Condition 2	
FE Class B	B

Note, if FE is not required B is not necessary, the valve design remains the same, no FE production testing will be conducted.

Process / Instrument Connection											
*Clamp & Bolt Material	Material		Hub Size						Pressure Rating	
10,000 PSI										
AISI 4140 Clamp & A320-L7 Bolting	Duplex	E	1 - 1/2"	24	Hub	G	Seal 11	11	10,000 PSI	10K
			1 - 1/2"	24			Seal 14	14		
			2"	32			Seal 11	11		
			2"	32			Seal 13	13		
			2"	32			Seal 14	14		
			2"	32			Seal 16	16		
			2"	32	Heavy Duty Hub	B	Seal 14	14		
AISI 4140 Clamp & A320-L7 Bolting	Super Duplex	F	1 - 1/2"	24	Hub	G	Seal 11	11		
			2"	32			Seal 13	13		
			2"	32			Seal 14	14		
			2"	32			Seal 16	16		
			2"	32			Seal 20	20		
			2"	32	Heavy Duty Hub	B	Seal 14	14		
A182-F304 Clamp & A320-B8 Bolting	625	M	1 - 1/2"	24	Hub	G	Seal 11	11		
			2"	32			Seal 11	11		
			2"	32			Seal 13	13		
			2"	32	Heavy Duty Hub	B	Seal 14	14		
15,000 PSI										
AISI 4140 Clamp & A320-L7 Bolting	Duplex	E	1 - 1/2"	24	Hub	G	Seal 11	11	15,000 PSI	15K
			2"	32			Seal 11	11		
			2"	32			Seal 13	13		
			2"	32			Seal 14	14		
			2"	32	Heavy Duty Hub	B	Seal 14	14		
AISI 4140 Clamp & A320-L7 Bolting	Super Duplex	F	1 - 1/2"	24	Hub	G	Seal 11	11		
			2"	32			Seal 11	11		
			2"	32			Seal 13	13		
			2"	32			Seal 14	14		
			2"	32			Seal 16	16		
			2"	32	Heavy Duty Hub	B	Seal 14	14		
A182-F304 Clamp & A320-B8 Bolting	625	M	1 - 1/2"	24	Hub	G	Seal 11	11		
			2"	32			Seal 11	11		
			2"	32	Heavy Duty Hub	B	Seal 14	14		

Notes:
- If 1/2" Female NPT outlet is selected then vent connection is 1/2"Female NPT only. No connection designator required.
- Needle Valve bore size 8mm
- Hub/Seal size selection shown is based on the overall combined pressure capability of base material with the clamp and bolt materials as listed

* Hub ended valves are NOT supplied with seals, clamps and bolts as standard



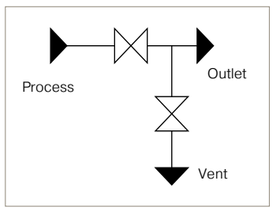

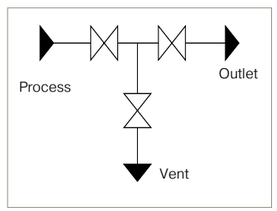

Tel: +45 63 12 83 00 | Email: ps@hymatik.com | www.hymatik.com | Hvidkaervej 27a, DK-5250 Odense SV, Denmark

Complementary Products for Complete Installation Solutions

Flushing Rings (Spools)



Flushing Rings, historically referred to as drip rings are used between an isolation valve and the diaphragm seal of a pressure transmitter. Side ports on the rings allow media to be injected/ejected so that the diaphragm seal can be flushed free of deposits that affect transmitter measurement accuracy.
Parker offers a bespoke range of flushing rings in number of different styles and configurations. Historically, drip rings are secured between the two raised faces only and held in position by the force exerted through the bolts. The Parker Flushing Ring solution is held in place by the through bolting, this allows for ease of installation and give positive locating. Options with this range of flushing rings include captive studs. This gives the added benefit of the flushing ring staying in place if either the process valve side or diaphragm side require removal.
For full details see Data Sheet ref. 4190-FR.

ProSpool



The Parker ProSpool feature a combined, single-piece valve consisting of a double block and bleed configuration with an integral flushing spool. It can be easily installed and, having fewer component parts, reduces inventory and purchase orders.
With the captive stud option torquing of the nuts is simplified. Extremely useful in restricted spaces.
For full details see Data Sheet ref. 4190-PSV.

Ball Valves and Manifolds Hi-Pro Series



These high performance bi-directional Ball Valves & Manifolds offer the user full cold working pressure ratings up to 10,000 psi (689 bar), giving 100% bubble tight shut off and continuous repeatable performance. These products are suitable for the most demanding applications in the oil, gas and process control industries. All valves also meet the requirements of ANSI B31.1 for use in power plants. The design reduces potential body leakage paths to a minimum. With the added opportunity to select Parker Superior Advantage integral compression ends the user can eliminate the use of taper threads and thread sealant, thus avoiding system contamination, reducing leakage paths, installation costs, weight and space.
For full details see Catalogues ref. 4190-HBV and 4190-HBM.

Air Header Distribution Manifolds - LPAHM Series



These air header distribution manifolds are designed to distribute air from the compressor to the actuators on pneumatic instruments, such as steam flow meters, pressure controllers and valve positioners. They are widely used in industrial chemical processing, plastic processing and energy industries and are approved for low pressure applications up to 275 psi. Manufactured from AISI 316 Stainless Steel material, the air header distribution manifolds offer complete customer system compatibility that reduces installation time and potential leak paths. The coded welded construction with non-destructive tested design minimises the number of potential leak paths, rather than fabricating with instrumentation connections with tubing, therefore reducing labour costs. These manifolds are designed for use with air only and are supplied with a number of lockable ball valves on opposite sides, right side or left side only to prevent unauthorized access.
For full details see Catalogue ref. 4190-DM.

Air Header Distribution Manifolds - HPAHM Series



These distribution manifolds are designed for applications that use liquid or gas, low temperature steam and hydraulic actuation. The pressure rating of these manifolds is dictated by the inlet/outlet Flange Class or the thread connection. These distribution manifolds feature an ergonomic vinyl sleeve on the valve handle to provide positive grip and to ensure ease of operation. Each nut has an innovative domed design, which prevents ingress of moisture and contamination of the thread, therefore preventing corrosion. They feature a part-welded construction, with all welds carried out by coded welders, providing assurance of their robustness and performance. These manifolds are NDT (Non-Destructive Testing) applied, giving the customer greater assurance.
For full details see Catalogue ref. 4190-DM.

Hi-Pro Modular Distribution Manifold



Unique to Parker, these manifolds are the ideal choice when ultimate flexibility is required within a distribution manifold. They are approved to operate at pressures up to 6,000 psi and are used extensively in the oil, gas, chemical and petrochemical industries to provide safety and performance. These innovative Hi-Pro modular distribution manifolds can be easily arranged in a layout to suit a wide range of different applications to distribute liquid or gas. They use standard components, therefore making it more affordable for the customer. The Hi-Pro modular distribution manifolds feature an ergonomic vinyl sleeve on the valve handle to provide positive grip and to ensure ease of operation. Each nut is domed in shape, which prevents ingress of moisture and contamination of the thread, which could cause corrosion. This manifold is available with up to 20 valves (even numbers only - spare valves can be blanked off). Temperature range is up to 232ºC with PEEK seats.
For full details see Catalogue ref. 4190-DM.

Lapped Joint Tube Adaptor



Available in the full range of fitting materials and sizes up to 1/2" (M12) as standard, these lapped joint tube adaptors are suitable for applications involving small flanged process valves and offer a simple, safe and effective conversion to instrument lines.

Flange Connector - Flange to Parker Tube Fittings



Offered in a range of materials and with either A-LOK® or CPI™ tube fitting technology, these flange connectors deliver huge flexibility in terms of offering. Tube connections up to 1" (25mm), flange connections up to 2" NB and pressures to ANSI Class 2500 (6,000 PSI Nom.). The one-piece integral connection adaptors allow the safe, easy and efficient transition from process to instrumentation in just one step.

Tel: +45 63 12 83 00 | Email: ps@hymatik.com | www.hymatik.com | Hvidkaervej 27a, DK-5250 Odense SV, Denmark

Offer of Sale

The items described in this document and other documents and descriptions provided by Parker Hannifin Corporation, its subsidiaries and its authorized distributors ("Seller") are hereby offered for sale at prices to be established by Seller. This offer and its acceptance by any customer ("Buyer") shall be governed by all of the following Terms and Conditions. Buyer's order for any item described in its document, when communicated to Seller verbally, or in writing, shall constitute acceptance of this offer. All goods or work described will be referred to as "Products".

1. Terms and Conditions. Seller's willingness to offer Products, or accept an order for Products, to or from Buyer is expressly conditioned on Buyer's assent to these Terms and Conditions and to the terms and conditions found on-line at www.parker.com/saleterms/. Seller objects to any contrary or additional term or condition of Buyer's order or any other document issued by Buyer.

2. Price Adjustments; Payments. Prices stated on the reverse side or preceding pages of this document are valid for 30 days. After 30 days, Seller may change prices to reflect any increase in its costs resulting from state, federal or local legislation, price increases from its suppliers, or any change in the rate, charge, or classification of any carrier. The prices stated on the reverse or preceding pages of this document do not include any sales, use, or other taxes unless so stated specifically. Unless otherwise specified by Seller, all prices are F.O.B. Seller's facility, and payment is due 30 days from the date of invoice. After 30 days, Buyer shall pay interest on any unpaid invoices at the rate of 1.5% per month or the maximum allowable rate under applicable law.

3. Delivery Dates; Title and Risk; Shipment. All delivery dates are approximate and Seller shall not be responsible for any damages resulting from any delay. Regardless of the manner of shipment, title to any products and risk of loss or damage shall pass to Buyer upon tender to the carrier at Seller's facility (i.e., when it's on the truck, it's yours). Unless otherwise stated, Seller may exercise its judgment in choosing the carrier and means of delivery. No deferment of shipment at Buyers' request beyond the respective dates indicated will be made except on terms that will indemnify, defend and hold Seller harmless against all loss and additional expense. Buyer shall be responsible for any additional shipping charges incurred by Seller due to Buyer's changes in shipping, product specifications or in accordance with Section 13, herein.

4. Warranty. Seller warrants that the Products sold here-under shall be free from defects in material or workmanship for a period of twelve months from the date of delivery to Buyer or 2,000 hours of normal use, whichever occurs first. This warranty is made only to Buyer and does not extend to anyone to whom Products are sold after purchased from Seller. The prices charged for Seller's products are based upon the exclusive limited warranty stated above, and upon the following disclaimer: DISCLAIMER OF WARRANTY: THIS WARRANTY COMPRISES THE SOLE AND ENTIRE WARRANTY PERTAINING TO PRODUCTS PROVIDED HEREUNDER. SELLER DISCLAIMS ALL OTHER WARRANTIES, EXPRESS AND IMPLIED, INCLUDING MERCHANTABILITY AND FITNESS FOR A PARTICULAR PURPOSE.

5. Claims; Commencement of Actions. Buyer shall promptly inspect all Products upon delivery. No claims for shortages will be allowed unless reported to the Seller within 10 days of delivery.

No other claims against Seller will be allowed unless asserted in writing within 60 days after delivery or, in the case of an alleged breach of warranty, within 30 days after the date within the warranty period on which the defect is or should have been discovered by Buyer. Any action based upon breach of this agreement or upon any other claim arising out of this sale (other than an action by Seller for any amount due to Seller from Buyer) must be commenced within thirteen months from the date of tender of delivery by Seller or, for a cause of action based upon an alleged breach of warranty, within thirteen months from the date within the warranty period on which the defect is or should have been discovered by Buyer.

6. LIMITATION OF LIABILITY. UPON NOTIFICATION, SELLER WILL, AT ITS OPTION, REPAIR OR REPLACE A DEFECTIVE PRODUCT, OR REFUND THE PURCHASE PRICE. IN NO EVENT SHALL SELLER BE LIABLE TO BUYER FOR ANY SPECIAL, INDIRECT, INCIDENTAL OR CONSEQUENTIAL DAMAGES ARISING OUT OF, OR AS THE RESULT OF, THE SALE, DELIVERY, NON-DELIVERY, SERVICING, USE OR LOSS OF USE OF THE PRODUCTS OR ANY PART THEREOF, OR FOR ANY CHARGES OR EXPENSES OF ANY NATURE INCURRED WITHOUT SELLER'S WRITTEN CONSENT, EVEN IF SELLER HAS BEEN NEGLIGENT, WHETHER IN CONTRACT, TORT OR OTHER LEGAL THEORY. IN NO EVENT SHALL SELLER'S LIABILITY UNDER ANY CLAIM MADE BY BUYER EXCEED THE PURCHASE PRICE OF THE PRODUCTS.

7. Contingencies. Seller shall not be liable for any default or delay in performance if caused by circumstances beyond the reasonable control of Seller.

8. User Responsibility. The user, through its own analysis and testing, is solely responsible for making the final selection of the system and Product and assuring that all performance, endurance, maintenance, safety and warning requirements of the application are met. The user must analyze all aspects of the application and follow applicable industry standards and Product information. If Seller provides Product or system options, the user is responsible for determining that such data and specifications are suitable and sufficient for all applications and reasonably foreseeable uses of the Products or systems.

9. Loss to Buyer's Property. Any designs, tools, patterns, materials, drawings, confidential information or equipment furnished by Buyer or any other items which become Buyer's property, may be considered obsolete and may be destroyed by Seller after two consecutive years have elapsed without Buyer placing an order for the items which are manufactured using such property. Seller shall not be responsible for any loss or damage to such property while it is in Seller's possession or control.

10. Special Tooling. A tooling charge may be imposed for any special tooling, including without limitation, dies, fixtures, molds and patterns, acquired to manufacture Products.

Such special tooling shall be and remain Seller's property notwithstanding payment of any charges by Buyer. In no event will Buyer acquire any interest in apparatus belonging to Seller which is utilized in the manufacture of the Products, even if such apparatus has been specially converted or adapted for such manufacture and notwithstanding any charges paid by Buyer. Unless otherwise agreed, Seller shall have the right to alter, discard or otherwise dispose of any special tooling or other property in its sole discretion at any time.

11. Buyer's Obligation; Rights of Seller. To secure payment of all sums due or otherwise, Seller shall retain a security interest in the goods delivered and this agreement shall be deemed a Security Agreement under the Uniform Commercial Code. Buyer authorizes Seller as its attorney to execute and file on Buyer's behalf all documents Seller deems necessary to perfect its security interest. Seller shall have a security interest in, and lien upon, any property of Buyer in Seller's possession as security for the payment of any amounts owed to Seller by Buyer.

12. Improper use and Indemnity. Buyer shall indemnify, defend, and hold Seller harmless from any claim, liability, damages, lawsuits, and costs (including attorney fees), whether for personal injury, property damage, patent, trademark or copyright infringement or any other claim, brought by or incurred by Buyer, Buyer's employees, or any other person, arising out of: (a) improper selection, improper application or other misuse of Products purchased by Buyer from Seller; (b) any act or omission, negligent or otherwise, of Buyer; (c) Seller's use of patterns, plans, drawings, or specifications furnished by Buyer to manufacture Product; or (d) Buyer's failure to comply with these terms and conditions. Seller shall not indemnify Buyer under any circumstance except as otherwise provided.

13. Cancellations and Changes. Orders shall not be subject to cancellation or change by Buyer for any reason, except with Seller's written consent and upon terms that will indemnify, defend and hold Seller harmless against all direct, incidental and consequential loss or damage. Seller may change product features, specifications, designs and availability with notice to Buyer.

14. Limitation on Assignment. Buyer may not assign its rights or obligations under this agreement without the prior written consent of Seller.

15. Entire Agreement. This agreement contains the entire agreement between the Buyer and Seller and constitutes the final, complete and exclusive expression of the terms of the agreement. All prior or contemporaneous written or oral agreements or negotiations with respect to the subject matter are herein merged.

16. Waiver and Severability. Failure to enforce any provision of this agreement will not waive that provision nor will any such failure prejudice Seller's right to enforce that provision in the future. Invalidation of any provision of this agreement by legislation or other rule of law shall not invalidate any other provision herein. The remaining provisions of this agreement will remain in full force and effect.

17. Termination. This agreement may be terminated by Seller for any reason and at any time by giving Buyer thirty (30) days written notice of termination. In addition, Seller may by written notice immediately terminate this agreement for the following: (a) Buyer commits a breach of any provision of this agreement (b) the appointment of a trustee, receiver or custodian for all or any part of Buyer's property (c) the filing of a petition for relief in bankruptcy of the other Party on its own behalf, or by a third party (d) an assignment for the benefit of creditors, or (e) the dissolution or liquidation of the Buyer.

18. Governing Law. This agreement and the sale and delivery of all Products hereunder shall be deemed to have taken place in and shall be governed and construed in accordance with the laws of the State of Ohio, as applicable to contracts executed and wholly performed therein and without regard to conflicts of laws principles. Buyer irrevocably agrees and consents to the exclusive jurisdiction and venue of the courts of Cuyahoga County, Ohio with respect to any dispute, controversy or claim arising out of or relating to this agreement. Disputes between the parties shall not be settled by arbitration unless, after a dispute has arisen, both parties expressly agree in writing to arbitrate the dispute.

19. Indemnity for Infringement of Intellectual Property Rights. Seller shall have no liability for infringement of any patents, trademarks, copyrights, trade dress, trade secrets or similar rights except as provided in this Section. Seller will defend and indemnify Buyer against allegations of infringement of U.S. patents, U.S. trademarks, copyrights, trade dress and trade secrets ("Intellectual Property Rights"). Seller will defend at its expense and will pay the cost of any settlement or damages awarded in an action brought against Buyer based on an allegation that a Product sold pursuant to this Agreement infringes the Intellectual Property Rights of a third party. Seller's obligation to defend and indemnify Buyer is contingent on Buyer notifying Seller within ten (10) days after Buyer becomes aware of such allegations of infringement, and Seller having sole control over the defense of any allegations or actions including all negotiations for settlement or compromise. If a Product is subject to a claim that it infringes the Intellectual Property Rights of a third party, Seller may, at its sole expense and option, procure for Buyer the right to continue using the Product, replace or modify the Product so as to make it noninfringing, or offer to accept return of the Product and return the purchase price less a reasonable allowance for depreciation. Notwithstanding the foregoing, Seller shall have no liability for claims of infringement based on information provided by Buyer, or directed to Products delivered hereunder for which the designs are specified in whole or part by Buyer, or infringements resulting from the modification, combination or use in a system of any Product sold hereunder. The foregoing provisions of this Section shall constitute Seller's sole and exclusive liability and Buyer's sole and exclusive remedy for infringement of Intellectual Property Rights.

20. Taxes. Unless otherwise indicated, all prices and charges are exclusive of excise, sales, use, property, occupational or like taxes which may be imposed by any taxing authority upon the manufacture, sale or delivery of Products.

21. Equal Opportunity Clause. For the performance of government contracts and where dollar value of the Products exceed $10,000, the equal employment opportunity clauses in Executive Order 11246, VEVRAA, and 41 C.F.R. §§ 60-1.4(a), 60-741.5(a), and 60-250.4, are hereby incorporated.

Tel: +45 63 12 83 00 | Email: ps@hymatik.com | www.hymatik.com | Hvidkaervej 27a, DK-5250 Odense SV, Denmark

⚠ WARNING USER RESPONSIBILITY

FAILURE OR IMPROPER SELECTION OR IMPROPER USE OF THE PRODUCTS DESCRIBED HEREIN OR RELATED ITEMS CAN CAUSE DEATH, PERSONAL INJURY AND PROPERTY DAMAGE.

This document and other information from Parker Hannifin Corporation, its subsidiaries and authorized distributors provide product or system options for further investigation by users having technical expertise.

The user, through its own analysis and testing, is solely responsible for making the final selection of the system and components and assuring that all performance, endurance, maintenance, safety and warning requirements of the application are met. The user must analyse all aspects of the application, follow applicable industry standards, and follow the information concerning the product in the current product catalogue and in any other materials provided from Parker or its subsidiaries or authorized distributors.

To the extent that Parker or its subsidiaries or authorized distributors provide component or system options based upon data or specifications provided by the user, the user is responsible for determining that such data and specifications are suitable and sufficient for all applications and reasonably foreseeable uses of the components or systems.

Tel: +45 63 12 83 00 | Email: ps@hymatik.com | www.hymatik.com | Hvidkaervej 27a, DK-5250 Odense SV, Denmark

Parker Worldwide

Europe, Middle East, Africa

AE – United Arab Emirates, Dubai
Tel: +971 4 8127100

AT – Austria, St. Florian
Tel: +43 (0)7224 66201

AZ – Azerbaijan, Baku
Tel: +994 50 2233 458

BE/NL/LU – Benelux, Hendrik Ido Ambacht
Tel: +31 (0)541 585 000

BY – Belarus, Minsk
Tel: +48 (0)22 573 24 00

CH – Switzerland, Etoy
Tel: +41 (0)21 821 87 00

CZ – Czech Republic, Prague
Tel: +420 284 083 111

DE – Germany, Kaarst
Tel: +49 (0)2131 4016 0

DK – Denmark, Ballerup
Tel: +45 43 56 04 00

ES – Spain, Madrid
Tel: +34 902 330 001

FI – Finland, Vantaa
Tel: +358 (0)20 753 2500

FR – France, Contamine s/Arve
Tel: +33 (0)4 50 25 80 25

GR – Greece
Tel: +30 69 44 52 78 25

HU – Hungary, Budaörs
Tel: +36 23 885 470

IE – Ireland, Dublin
Tel: +353 (0)1 466 6370

IL – Israel
Tel: +39 02 45 19 21

IT – Italy, Corsico (MI)
Tel: +39 02 45 19 21

KZ – Kazakhstan, Almaty
Tel: +7 7273 561 000

NO – Norway, Asker
Tel: +47 66 75 34 00

PL – Poland, Warsaw
Tel: +48 (0)22 573 24 00

PT – Portugal
Tel: +351 22 999 7360

RO – Romania, Bucharest
Tel: +40 21 252 1382

SE – Sweden, Borås
Tel: +46 (0)8 59 79 50 00

SL – Slovenia, Novo Mesto
Tel: +386 7 337 6650

TR – Turkey, Istanbul
Tel: +90 216 4997081

UK – United Kingdom, Warwick
Tel: +44 (0)1926 317 878

ZA – South Africa, Kempton Park
Tel: +27 (0)11 961 0700

North America

CA – Canada, Milton, Ontario
Tel: +1 905 693 3000

US – USA, Cleveland
Tel: +1 216 896 3000

Asia Pacific

AU – Australia, Castle Hill
Tel: +61 (0)2-9634 7777

CN – China, Shanghai
Tel: +86 21 2899 5000

HK – Hong Kong
Tel: +852 2428 8008

IN – India, Mumbai
Tel: +91 22 6513 7081-85

JP – Japan, Tokyo
Tel: +81 (0)3 6408 3901

KR – South Korea, Seoul
Tel: +82 2 559 0400

MY – Malaysia, Shah Alam
Tel: +60 3 7849 0800

NZ – New Zealand, Mt Wellington
Tel: +64 9 574 1744

SG – Singapore
Tel: +65 6887 6300

TH – Thailand, Bangkok
Tel: +662 186 7000

TW – Taiwan, Taipei
Tel: +886 2 2298 8987

South America

AR – Argentina, Buenos Aires
Tel: +54 3327 44 4129

BR – Brazil, Sao Jose dos Campos
Tel: +55 080 0727 5374

CL – Chile, Santiago
Tel: +56 22 303 9640

MX – Mexico, Toluca
Tel: +52 72 2275 4200

European Product Information Centre
Free phone: 00 800 27 27 5374
(from AT, BE, CH, CZ, DE, DK, EE, ES, FI, FR, IE, IL, IS, IT, LU, MT, NL, NO, PL, PT, RU, SE, SK, UK, ZA)

Your local authorized Parker distributor

© 2023 Parker Hannifin Corporation. All rights reserved.

4190-FP 01.02.23

Parker Hannifin Manufacturing Ltd.
Instrumentation Products Division, Europe
Riverside Road
Barnstaple EX31 1NP
United Kingdom

phone 0044 (0)1271 313131
www.parker.com/ipd