LUCIFER®

General Catalogue Solenoid Valves

Catalogue 8930/GB

CONTENTS ▶

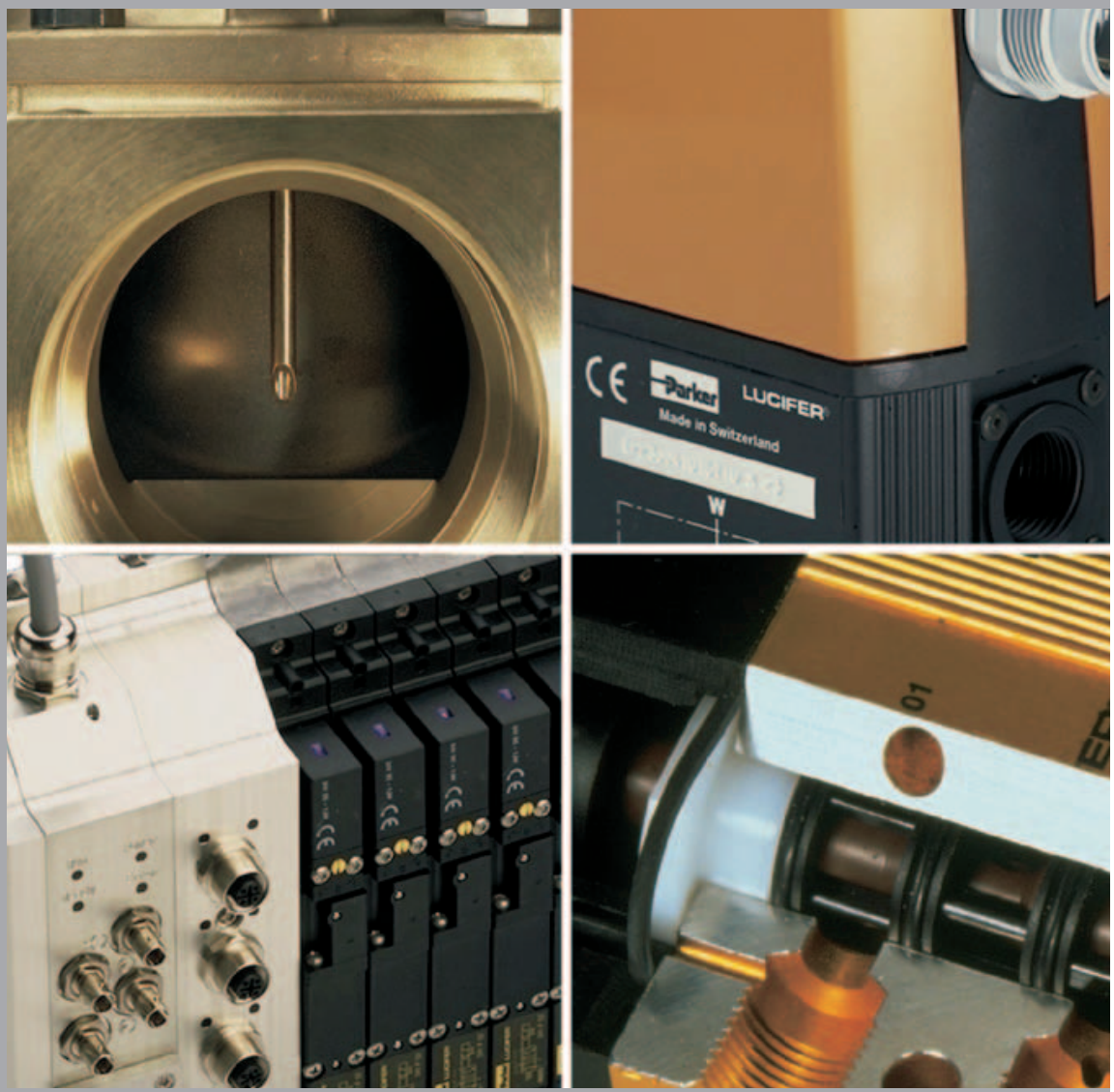

Parker

Parker Lucifer SA



Perfect compatibility between a multinational approach and integration into the local industrial community.

Parker Lucifer's Valve Division, manufacturing fluid control solenoid valves and pressure regulators, is located in Carouge-Geneva, Switzerland with manufacturing sites both in Geneva and Gessate near Milan, Italy.

With the multinational structure of the Parker Group we now have support that enables us to face the international market. To date we are represented in over 50 Countries with an established network of distributors in each industrial market open to us. Parker Lucifer is located in Geneva, Switzerland, a European communications and traffic centre.



Mastering technologies in anticipation of your needs.

We aim always to stay a step ahead of our customers' demands. You are looking for someone who has expertise in the latest technology, who has a solid body of know-how and who will participate directly in the development of your products.

Parker Lucifer takes advantage of the developments made in various divisions of Parker Corporation and, in doing so, of all the skills and synergy generated by our Group.

Parker's technology transfer policy provides us with the know-how of a global corporation. You derive direct advantage from this for our expertise in these technologies, which enables us to anticipate your needs.



Total quality and innovation. Our strong points for building the future with you

Quality has now become the essential condition for the survival of a corporation. You know it. We know it.

Your future depends on offering your customers ever more efficient, more reliable products. To do that, you have to be able to rely on first-rate suppliers who share your vision of the future and are capable of understanding your needs.

In order to better meet your demands and to ensure that we can offer you full guarantees of reliability, we have perfected a Total Quality program. At the same time, we pursue a strategy of innovation both in our processes and functions as well as in safety.



Environmental management bears witness to our desire to protect essential values.

Parker Lucifer is committed to respecting and protecting our environment by applying its own solutions. Although not mandatory, the ISO 14001 standards concern the environmental commitment of the company to supply products and service that will help our customers improve environmental quality. It relates to waste reduction, elimination of harmful materials, recycling and development of environment-friendly products. This Certified Management System to ISO 9001 / 14001 will also play a key role as a competitive differentiation in the marketplace.

Tel: +45 63 12 83 00 | Email: ps@hymatik.com | www.hymatik.com | Hvidkaervej 27a, DK-5250 Odense SV, Denmark

Contents

	Page
Introduction	2
How to select your valve	3
How to order your valve	3
2-way valves	5
General appplication valves for dry or lubricated air neutral gases and liquids	7
Miniature valves (2-way direct operated)	37
Valves for water and neutral liquids	45
Anti-water hammer valves	63
Hot water - steam valves	71
Valves for hydraulic oil and neutral liquids (max. 100 bar)	85
High corrosion resistant valves (Stainless Steel)	95
Oil burner valves (incl. TÜV approved types)	101
Dry oparator valves for corrosive fluids	113
Fast switching vlaves	117
3-way valves	121
General appplication valves for dry or lubricated air neutral gases and liquids	123
Miniature valves (3-way direct operated)	161
Valves for hydraulic oil and neutral liquids (max. 75 bar)	175
High corrosion resistant valves (Stainless Steel)	181
3- & 4-way valves for Pneumatic application	185
4-way pneumatic valves for pipe connection/Sub-base mounting	187
3- & 4-way pneumatic valves for actuator control (pipe mounted and with NAMUR interface)	225
3-way solenoid valves for actuator control	233
3- & 4-way pneumatic valves for actuator control (pipe mounted and with NAMUR interface)	238
316L St. Steel 3- & 4-way pneumatic valves for Offshore applications)	273
316L St. Steel 3- & 4-way pneumatic valves for actuator control (pipe mounted and with NAMUR interface)	287
EExPress Bus Manifold for actuator control	317
Electropneumatic Pressure regulators - EPP Series	323
Electrical parts (coils & housings)	333
Additional information	384
Technical information about Lucifer valves	385
Fluid compatibility chart	388
Index by reference numbers - cross reference list	390
Distribution network	398

Parker Lucifer SA
Fluid Control Division Europe
CH-1227 Carouge-Genève

Tel: +45 63 12 83 00 | Email: ps@hymatik.com | www.hymatik.com | Hvidkaervej 27a, DK-5250 Odense SV, Denmark

Parker Lucifer - the experts in fluid control

Welcome to the Parker Lucifer catalogue. It's your entry point to an entire programme of solenoid valves based on the unique Lucifer modular concept. This gives you the widest choice of specifications and options to match your requirements exactly.

Making business as simple as possible

The catalogue is just one part of a very special kind of supplier-specifier relationship. In short, we want to make doing business as simple as possible. It begins with organising ***products by application*** for the quickest selection of a product for a specified application. It extends to ease of ordering, fast delivery, and additional customer services. All backed by highly qualified support engineers willing and able to discuss your needs and suggest solutions. Work with us, for example, to create customised products; we have a proud record of customer partnership projects resulting in innovative products - and satisfied customers.

The Parker Lucifer

The Parker Lucifer Series products have been designed to offer customers the ultimate in performance. Every valve is engineered for optimal operation, is constructed with modern machinery that use stringent processes, and provides standard features not necessarily offered in any competitive line.

The Parker Lucifer Series portfolio offers a broad range of solenoid valves. Sizes range from G1/8 to G3, with K_V as high as 1385 L/min. Pressure capabilities range up to 100 bar; the whole range is available with various seal materials, such as NBR, FKM, EPDM, PTFE, PCTFE, PUR and Ruby. Brass, stainless steel and plastic valves are available to control a wide variety of air, neutral gases and liquids, water, oils, process fluids and steam.



Availability

With over 750 product listings, the valve you need is probably available from our standard range. What's more, the same valves are ***available from our distributors anywhere in the world.*** So wherever you are you can order with complete confidence.

Thanks to the breadth of our product offering, the flexibility of the modular architecture, and the use of automated manufacturing processes, you can count on the ready availability of the valve you require.

Modular construction ensures that even unusual configurations can be assembled from stock components. It provides a high degree of "mix & match" flexibility with a minimum number of parts, giving Parker Lucifer the ability to quickly deliver a great variety of valves.

Quality assured

Certification by SQS (the Swiss Association for Quality Certification), Category ISO 9001/14001, is formal recognition of Parker Lucifer's commitment to total Quality. It is the outward sign of a company dedicated to customer satisfaction at every level of the organisation. It was first achieved back in 1987, long before Quality certification became an everyday business issue, and Parker Lucifer was one of the first to qualify in Switzerland.

All the approvals you need

A wide range of valves and electrical parts are approved by recognised organisations (BASEEFA in UK, PTB in Germany, LCIE in France, CESI in Italy etc.) and meet CENELEC, IEC, and ISO standards. Lucifer valves are also certified by organisations such as TÜV, VDE, SEV/ASE, UL, CSA, etc.

Parker Lucifer SA
Fluid Control Division Europe
CH-1227 Carouge-Genève

How to select your valve

This catalogue has been designed to make selection as easy as possible. The structure allows you to find your valve step by step, beginning with the most basic features and gradually focusing on more and more precise details.

First, decide what kind of valve you want: 2-way, 3-way, pneumatic or special. Then check the contents page and turn to the beginning of the relevant section.

For ease of use, each valve section is divided by application. At the front of the application sub-section you choose, you will find an overview table of the products featured (see sample below).

Using the table as a guide, decide what kind of actuation you want, then go across the columns, choosing the body material, function, connection, orifice size and maximum pressure: this process takes you to the specific page number with your product,

Further technical information to help with specification is given in the final section of the catalogue.

General application valves for dry or lubricated air, neutral gases and liquids 2/2

ACTUATION	BODY MATERIAL	FUNCTION	CONNECTION	ORIFICE (MM)	MAX. PRESSURE (BAR)	PAGE
Direct operated	Brass body	Normally closed	1/8	1.5 to 3	70.0	8
			1/4	1.2 to 5	100.0	8
			3/8	4 to 6	10.0	12
			1/2	8.5 to 11	4.0	12
			SB	1.5 to 3	100.0	14

How to order a valve

Normally a complete valve is composed of 3 elements: the valve itself (body + pilot), the coil and the housing. For integrated coil/housings, the housing reference indicates the fixing nut and nameplate.

Two valve body references are indicated in the tables:

- the Lucifer reference
- the global reference

Either reference can be used when ordering. The Global valve reference permits a common numbering system between Lucifer and Skinner products. A complete cross-reference list of valve reference numbers can be found at the end of this catalogue. In both cases, it is necessary to order the coil and housing reference as well.

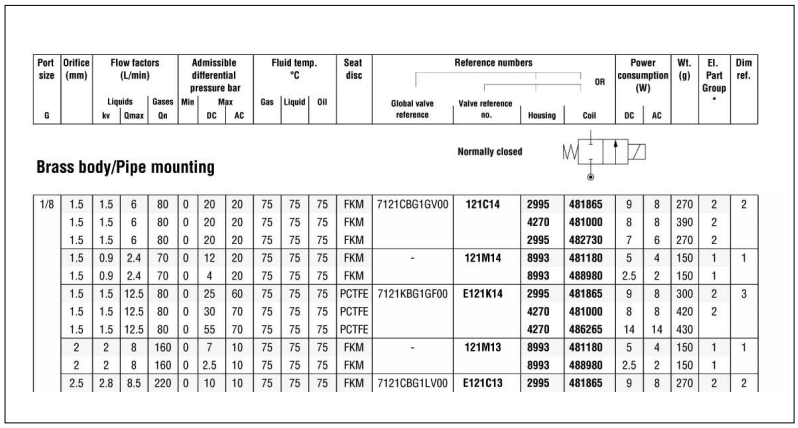

Brass body/Pipe mounting

Normally closed

Port size G	Orifice (mm)	Flow factors (L/min) Liquids kv	Liquids Qmax	Gases Qn	Admissible differential pressure bar Min	Max DC	Max AC	Fluid temp. °C Gas	Liquid	Oil	Seat disc	Reference numbers Global valve reference	Valve reference no.	Housing	Coil	Power consumption (W) DC	Power consumption (W) AC	Wt. (g)	El. Part Group *	Dim ref.
1/8	1.5	1.5	6	80	0	20	20	75	75	75	FKM	7121CBG1GV00	**121C14**	**2995**	**481865**	9	8	270	2	2
	1.5	1.5	6	80	0	20	20	75	75	75	FKM			**4270**	**481000**	8	8	390	2	
	1.5	1.5	6	80	0	20	20	75	75	75	FKM			**2995**	**482730**	7	6	270	2	
	1.5	0.9	2.4	70	0	12	20	75	75	75	FKM	-	**121M14**	**8993**	**481180**	5	4	150	1	1
	1.5	0.9	2.4	70	0	4	20	75	75	75	FKM			**8993**	**488980**	2.5	2	150	1	
	1.5	1.5	12.5	80	0	25	60	75	75	75	PCTFE	7121KBG1GF00	**E121K14**	**2995**	**481865**	9	8	300	2	3
	1.5	1.5	12.5	80	0	30	70	75	75	75	PCTFE			**4270**	**481000**	8	8	420	2	
	1.5	1.5	12.5	80	0	55	70	75	75	75	PCTFE			**4270**	**486265**	14	14	430		
	2	2	8	160	0	7	10	75	75	75	FKM	-	**121M13**	**8993**	**481180**	5	4	150	1	1
	2	2	8	160	0	2.5	10	75	75	75	FKM			**8993**	**488980**	2.5	2	150	1	
	2.5	2.8	8.5	220	0	10	10	75	75	75	FKM	7121CBG1LV00	**E121C13**	**2995**	**481865**	9	8	270	2	2

Therefore please specify:

I. Valve reference **or** Global valve reference
II. Housing
III. Coil
IV. Voltage or voltage code (see tables in the Electrical parts section).

Ordering example:

121K0756-2995-481865-220/50
or
7121KBG2LVMO-2995-481865-220/50

Important : valve, housing or coil can be ordered separately for use as a replacement or spare part.

Parker Lucifer SA
Fluid Control Division Europe
CH-1227 Carouge-Genève

Tel: +45 63 12 83 00 | Email: ps@hymatik.com | www.hymatik.com | Hvidkaervej 27a, DK-5250 Odense SV, Denmark

Parker Lucifer SA
Fluid Control Division Europe
CH-1227 Carouge-Genève

2-way valves

	Page
General appplication valves for dry or lubricated air neutral gases and liquids	7
Miniature valves (2-way direct operated)	37
Valves for water and neutral liquids	45
Anti-water hammer valves	63
Hot water - steam valves	71
Valves for hydraulic oil and neutral liquids (max. 100 bar)	85
High corrosion resistant valves (Stainless Steel)	95
Oil burner valves (incl. TÜV approved types)	101
Dry oparator valves for corrosive fluids	113
Fast switching valves	117

Applications

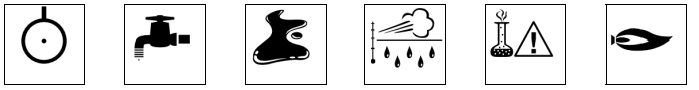

AIR | WATER | OIL | STEAM | CORROSION RESISTANT | OIL BURNER

Parker Lucifer SA
Fluid Control Division Europe
CH-1227 Carouge-Genève

Parker Lucifer SA
Fluid Control Division Europe
CH-1227 Carouge-Genève

General application valves for dry or lubricated air, neutral gases and liquids 2/2

ACTUATION	BODY MATERIAL	FUNCTION	CONNECTION	ORIFICE (MM)	MAX. PRESSURE (BAR)	PAGE
Direct operated	Brass body	Normally closed	1/8	1.5 to 3	70.0	8
			1/4	1.2 to 5	100.0	8
			3/8	4 to 6	10.0	12
			1/2	8.5 to 11	4.0	12
			SB	1.5 to 3	100.0	14
		Normally open	1/8	2.5	30.0	12
			1/4	1.5 to 2.5	40.0	12
		Magnetic latch control	1/4	3 to 5	20.0	12
Magnalift	Brass body	Normally closed	3/8	15	20.0	16
			1/2	15	20.0	16
			3/4	15	20.0	16
			1	15 to 25	20.0	18
		Normally open	3/8	15	8.5	20
			1/2	15	8.5	20
			3/4	19	8.5	20
	303 Stainless steel body	Normally closed	3/8	15	7.0	20
			1/2	15	7.0	20
			3/4	19	7.0	20
		Normally open	3/8	16	8.5	20
			1/2	16	8.5	20
Pilot operated	Brass body	Normally closed	1/4	8 to 12	40.0	22
			3/8	11 to 12	40.0	22
			1/2	12 to 14.5	40.0	22
			3/4	18 to 20	16.0	24
			1	18 to 25	16.0	24
			1 1/4	28	16.0	26
			1 1/2	40	16.0	26
			2	40	16.0	28
			SB	14	40.0	34
		Normally open	1/4	8 to 12	40.0	30
			3/8	11 to 12	40.0	32
			1/2	12 to 14.5	40.0	32
			3/4	18 to 20	16.0	32
			1	18 to 25	16.0	32
			1 1/4	28	16.0	32
			1 1/2	40	12.0	32
			2	40	12.0	32
			SB	14	40.0	34
		Magnetic latch control	1/4	12	12.0	34
			3/8	12	12.0	34
			1/2	12	12.0	34
			3/4	18	12.0	34
			1	18	12.0	34

Notes:
Direct operated and magnalift valves: pressure range from 0 to max pressure.
Pilot operated valves: pressure range from 0.3 to 0.5 bar to max. pressure (refer to tables).

Parker Lucifer SA
Fluid Control Division Europe
CH-1227 Carouge-Genève

General application valves for dry or lubricated air, neutral gases and liquids

2/2





Direct operated

Port size	Orifice (mm)	Flow factors (L/min)			Admissible differential pressure bar			Fluid temp. °C			Seat disc	Reference numbers				Power consumption (W)		Wt. (g)	El. Part Group *	Dim ref.
		Liquids		Gases	Min	Max		Gas	Liquid	Oil		Global valve reference	Valve reference no.	Housing	Coil	DC	AC			
G		kv	Qmax	Qn		DC	AC													

Normally closed

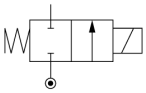

Brass body/Pipe mounting

1/8	1.5	1.5	6	80	0	20	20	75	75	75	FKM	7121ZBG1GV00	-	**2995**	**481865**	9	8	270	2	7893
	1.5	1.5	6	80	0	20	20	75	75	75	FKM			**4270**	**481000**	8	8	390	2	
	1.5	1.5	6	80	0	20	20	75	75	75	FKM			**2995**	**482730**	7	6	270	2	
	1.5	0.9	2.4	70	0	12	20	75	75	75	FKM	-	**121M14**	**8993**	**481180**	5	4	150	1	1
	1.5	0.9	2.4	70	0	4	20	75	75	75	FKM			**8993**	**488980**	2.5	2	150	1	
	1.5	1.5	12.5	80	0	25	60	75	75	75	PCTFE	7121KBG1GF00	**E121K14**	**2995**	**481865**	9	8	300	2	3
	1.5	1.5	12.5	80	0	30	70	75	75	75	PCTFE			**4270**	**481000**	8	8	420	2	
	1.5	1.5	12.5	80	0	55	70	75	75	75	PCTFE			**4270**	**486265**	14	14	430		
	2	2	8	160	0	7	10	75	75	75	FKM	-	**121M13**	**8993**	**481180**	5	4	150	1	1
	2	2	8	160	0	2.5	10	75	75	75	FKM			**8993**	**488980**	2.5	2	150	1	
	2.5	2.8	8.5	220	0	10	10	75	75	75	FKM	7121ZBG1LV00	-	**2995**	**481865**	9	8	270	2	7893
	2.5	2.8	8.5	220	0	10	10	75	75	75	FKM			**4270**	**481000**	8	8	390	2	
	2.5	2.8	8.5	220	0	5	10	75	75	75	FKM			**2995**	**482730**	7	6	270	2	
	2.5	3.5	25	220	0	10	28	100	100	100	Ruby	7121KBG1LR00	**E121K23**	**2995**	**481865**	9	8	300	2	3
	2.5	3.5	25	220	0	12	34	130	130	130	Ruby			**4270**	**481000**	8	8	420	2	
	2.5	3.5	25	220	0	22	50	120	120	120	Ruby			**4270**	**486265**	14	14	430		
	3	4.5	9	315	0	7	10	100	100	100	FKM	7121KBG1NV00	**121K1302**	**2995**	**481865**	9	8	300	2	3
	3	4.5	9	315	0	8	10	120	120	120	FKM			**4270**	**481000**	8	8	420	2	
	3	4.5	9	315	0	10	10	120	120	120	FKM			**4270**	**486265**	14	14	430		
	3	4.5	9	315	0	7	10	100	100	100	FKM	7121KBG1NVM0	**121K1352** [1]	**2995**	**481865**	9	8	300	2	3
	3	4.5	9	315	0	8	10	120	120	120	FKM			**4270**	**481000**	8	8	420	2	
	3	4.5	9	315	0	10	10	120	120	120	FKM			**4270**	**486265**	14	14	430		
1/4	1.2	0.85	8.5	50	0	36	80	100	100	100	Ruby	7121KBG2ER00	**E121K65**	**2995**	**481865**	9	8	290		3
	1.2	0.85	8.5	50	0	43	100	130	130	130	Ruby			**4270**	**481000**	8	8	410		
	1.2	0.85	8.5	50	0	75	100	120	120	120	Ruby			**4270**	**486265**	14	14	420		
	1.5	1.5	6	80	0	20	20	100	100	100	FKM	7121KBG2GV00	**E121K0402**	**2995**	**481865**	9	8	290	2	3
	1.5	1.5	6	80	0	20	20	120	120	120	FKM			**4270**	**481000**	8	8	410	2	

Table continued on page 10

Notes:

* See Electrical Parts Group table at end of section

1. Manual override standard

Parker Lucifer SA
Fluid Control Division Europe
CH-1227 Carouge-Genève

Tel: +45 63 12 83 00 | Email: ps@hymatik.com | www.hymatik.com | Hvidkaervej 27a, DK-5250 Odense SV, Denmark

General application valves 2/2 - Direct operated

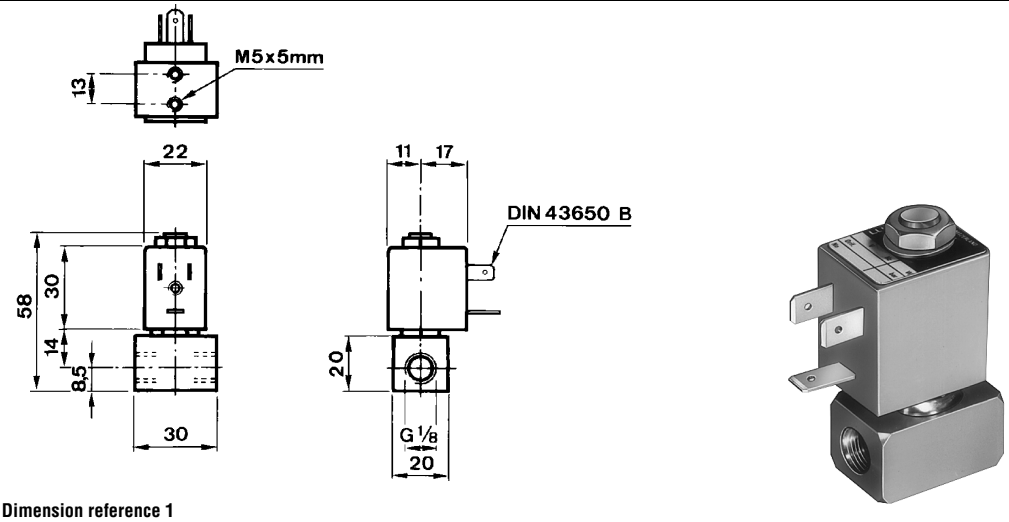

Dimension reference 1

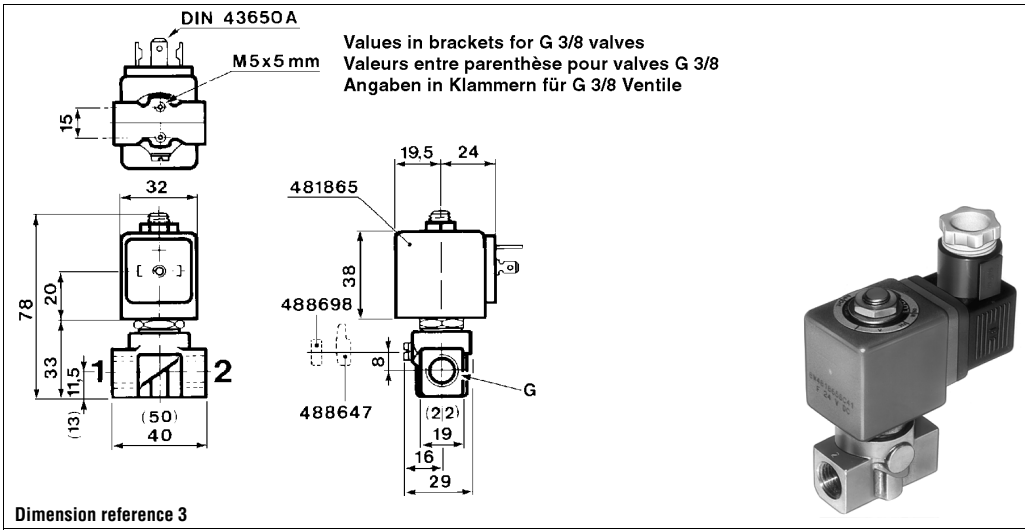

Dimension reference 3

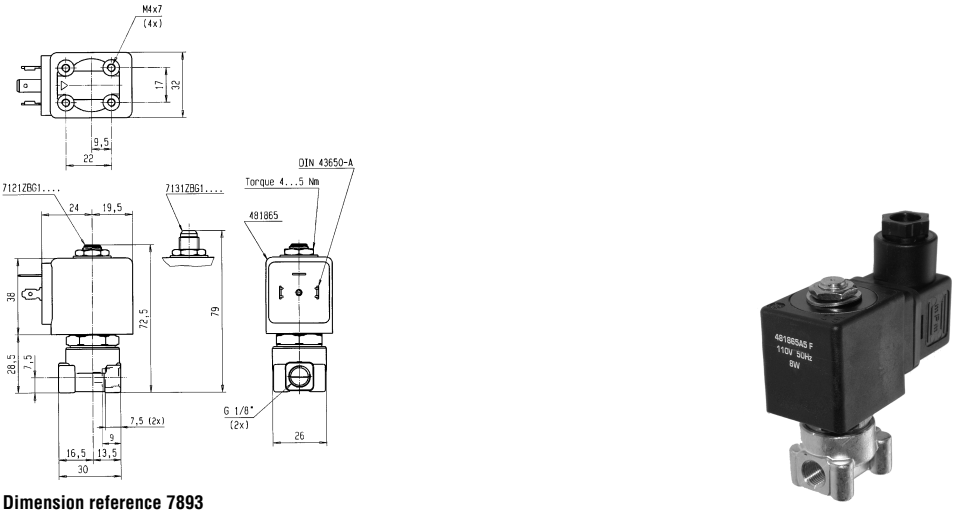

Dimension reference 7893

Parker Lucifer SA
Fluid Control Division Europe
CH-1227 Carouge-Genève

General application valves 2/2 - Direct operated

Brass body/Pipe mounting

Normally closed

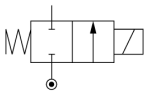

Port size G	Orifice (mm)	Flow factors (L/min) Liquids kv	Liquids Qmax	Gases Qn	Admissible differential pressure bar Min	Max DC	Max AC	Fluid temp. °C Gas	Liquid	Oil	Seat disc	Reference numbers Global valve reference	Valve reference no.	Housing	Coil	Power consumption (W) DC	AC	Wt. (g)	El. Part Group *	Dim ref.
1/4	1.5	1.5	12.5	80	0	25	60	75	75	75	PCTFE	7121KBG2GF00	**E121K04**	**2995**	**481865**	9	8	290	2	3
	1.5	1.5	12.5	80	0	30	70	75	75	75	PCTFE			**4270**	**481000**	8	8	410	2	
	1.5	1.5	12.5	80	0	55	70	75	75	75	PCTFE			**4270**	**486265**	14	14	420		
	1.5	1.5	15	80	0	25	60	100	100	100	Ruby	7121KBG2GR00	**E121K67**	**2995**	**481865**	9	8	290		3
	1.5	1.5	15	80	0	30	75	130	130	130	Ruby			**4270**	**481000**	8	8	410		
	1.5	1.5	15	80	0	55	100	120	120	120	Ruby			**4270**	**486265**	14	14	420		
	2.5	3.5	8.5	220	0	7	14	100	100	100	FKM	7121KBG2LV00	**121K0706**	**2995**	**481865**	9	8	290	2	3
	2.5	3.5	8.5	220	0	9	14	120	120	120	FKM			**4270**	**481000**	8	8	410	2	
	2.5	3.5	8.5	220	0	14	14	120	120	120	FKM			**4270**	**486265**	14	14	420		
	2.5	3.5	8.5	220	0	7	14	100	100	100	FKM	7121KBG2LVM0	**121K0756** [1]	**2995**	**481865**	9	8	290	2	3
	2.5	3.5	8.5	220	0	9	14	120	120	120	FKM			**4270**	**481000**	8	8	410	2	
	2.5	3.5	8.5	220	0	14	14	120	120	120	FKM			**4270**	**486265**	14	14	420		
	2.5	3.5	25	220	0	10	28	75	75	75	PCTFE	7121KBG2LF00	**E121K07**	**2995**	**481865**	9	8	290	2	3
	2.5	3.5	25	220	0	12	34	75	75	75	PCTFE			**4270**	**481000**	8	8	410	2	
	2.5	3.5	25	220	0	22	50	75	75	75	PCTFE			**4270**	**486265**	14	14	420		
	2.5	3.5	25	220	0	10	28	100	100	100	Ruby	7121KBG2LR00	**E121K63**	**2995**	**481865**	9	8	290		3
	2.5	3.5	25	220	0	12	34	130	130	130	Ruby			**4270**	**481000**	8	8	410		
	2.5	3.5	25	220	0	22	50	120	120	120	Ruby			**4270**	**486265**	14	14	420		
	3	4.5	9	315	0	7	10	100	100	100	FKM	7121KBG2NV00	**E121K0302**	**2995**	**481865**	9	8	290	2	3
	3	4.5	9	315	0	8.5	10	120	120	120	FKM			**4270**	**481000**	8	8	410	2	
	3	4.5	9	315	0	10	10	120	120	120	FKM			**4270**	**486265**	14	14	420		
	3	4.5	9	315	0	7	10	100	100	100	FKM	7121KBG2NVM0	**E121K0352** [1]	**2995**	**481865**	9	8	290	2	3
	3	4.5	9	315	0	8.5	10	120	120	120	FKM			**4270**	**481000**	8	8	410	2	
	3	4.5	9	315	0	10	10	120	120	120	FKM			**4270**	**486265**	14	14	420		
	3	4.5	27	315	0	7	20	75	75	75	PCTFE	7121KBG2NF00	**E121K03**	**2995**	**481865**	9	8	290	2	3
	3	4.5	27	315	0	8.5	25	75	75	75	PCTFE			**4270**	**481000**	8	8	410	2	
	3	4.5	27	315	0	15	36	75	75	75	PCTFE			**4270**	**486265**	14	14	420		
	3	4.5	27	320	0	7	20	100	100	100	Ruby	7121KBG2NR00	**E121K64**	**2995**	**481865**	9	8	290		3
	3	4.5	27	320	0	8.5	25	130	130	130	Ruby			**4270**	**481000**	8	8	410		
	3	4.5	27	320	0	15	36	120	120	120	Ruby			**4270**	**486265**	14	14	420		
	4	7.5	10.5	480	0	4	10	100	100	100	FKM	7121KBG2QVM0	**121K0250** [1]	**2995**	**481865**	9	8	290	2	3
	4	7.5	10.5	480	0	5	10	120	120	120	FKM			**4270**	**481000**	8	8	410	2	
	4	7.5	10.5	480	0	10	10	120	120	120	FKM			**4270**	**486265**	14	14	420		
	4	7.5	10.5	480	0	4	10	100	100	100	FKM	7121KBG2QV00	**121K02**	**2995**	**481865**	9	8	290	2	3
	4	7.5	10.5	480	0	5	10	120	120	120	FKM			**4270**	**481000**	8	8	410	2	
	4	7.5	10.5	480	0	10	10	120	120	120	FKM			**4270**	**486265**	14	14	420		
	5	11	11.5	750	0	2	7	100	100	100	FKM	7121KBG2SVM0	**121K0150** [1]	**2995**	**481865**	9	8	290	2	3
	5	11	11.5	750	0	2.8	7	120	120	120	FKM			**4270**	**481000**	8	8	410	2	
	5	11	11.5	750	0	5	7	120	120	120	FKM			**4270**	**486265**	14	14	420		

Table continued on page 12

Notes:

* See Electrical Parts Group table at end of section

1. Manual override standard

Parker Lucifer SA
Fluid Control Division Europe
CH-1227 Carouge-Genève

Tel: +45 63 12 83 00 | Email: ps@hymatik.com | www.hymatik.com | Hvidkaervej 27a, DK-5250 Odense SV, Denmark

General application valves 2/2 - Direct operated

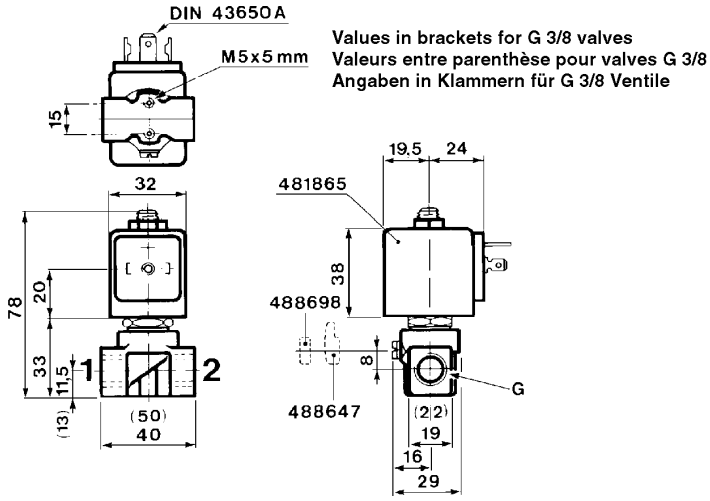



Parker Lucifer SA
Fluid Control Division Europe
CH-1227 Carouge-Genève

General application valves 2/2 - Direct operated

Port size G	Orifice (mm)	Flow factors (L/min) Liquids kv	Liquids Qmax	Gases Qn	Admissible differential pressure bar Min	Max DC	Max AC	Fluid temp. °C Gas	Liquid	Oil	Seat disc	Reference numbers Global valve reference	Valve reference no.	OR Housing	Coil	Power consumption (W) DC	AC	Wt. (g)	El. Part Group *	Dim ref.

Brass body/Pipe mounting

Normally closed

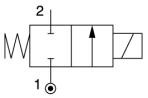

1/4	5	11	11.5	750	0	2	7	100	100	100	FKM	7121KBG2SV00	**121K01**	**2995**	**481865**	9	8	290	2	3
	5	11	11.5	750	0	2.8	7	120	120	120	FKM			**4270**	**481000**	8	8	410	2	
	5	11	11.5	750	0	5	7	120	120	120	FKM			**4270**	**486265**	14	14	420		
3/8	4	7.5	10.5	480	0	4	10	100	100	100	FKM	7121KBG3QV00	**121K3206**	**2995**	**481865**	9	8	340	2	3
	4	7.5	10.5	480	0	5	10	120	120	120	FKM			**4270**	**481000**	8	8	460	2	
	4	7.5	10.5	480	0	10	10	120	120	120	FKM			**4270**	**486265**	14	14	470		
	5	11	11.5	750	0	2	7	100	100	100	FKM	7121KBG3SV00	**121K3106**	**2995**	**481865**	9	8	340	2	3
	5	11	11.5	750	0	2.8	7	120	120	120	FKM			**4270**	**481000**	8	8	460	2	
	5	11	11.5	750	0	5	7	120	120	120	FKM			**4270**	**486265**	14	14	470		
	6	12	12.5	1100	0	1.1	5	100	100	100	FKM	7121KBG3UV00	**121K3306**	**2995**	**481865**	9	8	340	2	3
	6	12	12.5	1100	0	1.5	5	120	120	120	FKM			**4270**	**481000**	8	8	460	2	
	6	12	12.5	1100	0	3	5	120	120	120	FKM			**4270**	**486265**	14	14	470	2	
1/2	8.5	25	15	1600	0	0.5	1.1	100	100	100	FKM	7121KBG42V00	**E121K46**	**2995**	**481865**	9	8	430	2	7
	8.5	25	15	1600	0	0.5	2.2	120	120	120	FKM			**4270**	**481000**	8	8	550	2	
	8.5	25	15	1600	0	1.2	4	120	120	120	FKM			**4270**	**486265**	14	14	560		
	11	36	20	2500	0	0.3	0.7	100	100	100	FKM	7121KBG44V00	**E121K45**	**2995**	**481865**	9	8	430	2	7
	11	36	20	2500	0	0.35	1.2	120	120	120	FKM			**4270**	**481000**	8	8	550	2	
	11	36	20	2500	0	0.7	2.5	120	120	120	FKM			**4270**	**486265**	14	14	560		

Brass body/Pipe mounting

Normally open

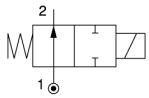

1/8	2.5	3.5	-	-	0	-	30	140	120	140	Ruby	7122KBG1LR00	**122K9363**	**4270**	**481044**	-	14	445		4
	2.5	3.5	-	-	0	30	30	140	120	140	Ruby			**4270**	**486265**	14	14	455		
1/4	1.5	1.5	6	80	0	20	20	100	100	100	FKM	7122KBG2GV00	**122K8406**	**2995**	**481865**	9	8	290	2	3
	1.5	1.5	6	80	0	20	20	120	120	120	FKM			**4270**	**481000**	8	8	410	2	
	1.5	1.5	8	80	0	30	30	100	100	100	PCTFE	7122KBG2GF00	**122K84**	**2995**	**481865**	9	8	290	2	3
	1.5	1.5	8	80	0	30	30	120	120	120	PCTFE			**4270**	**481000**	8	8	410	2	
	1.5	1.5	9.5	96	0	40	40	100	100	100	Ruby	7122KBG2GR00	**122K8408**	**2995**	**481865**	9	8	290	2	3
	1.5	1.5	9.5	96	0	40	40	130	130	130	Ruby			**4270**	**481000**	8	8	410	2	
	2.5	3	3.5	180	0	12	12	100	100	100	FKM	7122KBG2LV00	**122K8306**	**2995**	**481865**	9	8	290	2	3
	2.5	3	3.5	180	0	12	12	120	120	120	FKM			**4270**	**481000**	8	8	410	2	
	2.5	3	9.5	180	0	12	12	75	75	75	PCTFE	7122KBG2LF00	**122K83**	**2995**	**481865**	9	8	290	2	3
	2.5	3	9.5	180	0	12	12	75	75	75	PCTFE			**4270**	**481000**	8	8	410	2	
	2.5	3.5	-	-	0	-	30	140	120	140	Ruby	7122KBG2LR00	**122K8363**	**4270**	**481044**	-	14	425		4
	2.5	3.5	-	-	0	30	30	140	120	140	Ruby			**4270**	**486265**	14	14	435		

Brass body/Pipe mounting

Magnetic latch control

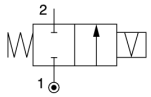

1/4	3	4.5	20	320	0	-	20	75	75	75	PCTFE	7125KBG2NF00	**125K03**	**4269**	**484990**	-	11	430	4	3
	3	4.5	20	320	0	7	-	75	75	75	PCTFE			**4269**	**485400**	13	-	430	4	

Table continued on page 14

Notes:

* See Electrical Parts Group table at end of section

Parker Lucifer SA
Fluid Control Division Europe
CH-1227 Carouge-Genève

Tel: +45 63 12 83 00 | Email: ps@hymatik.com | www.hymatik.com | Hvidkaervej 27a, DK-5250 Odense SV, Denmark

General application valves 2/2 - Direct operated

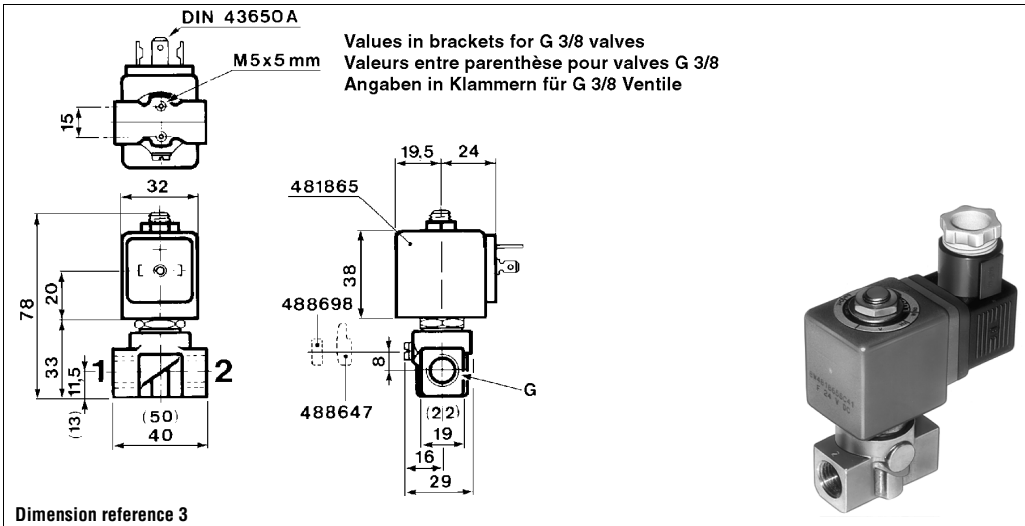

Dimension reference 3

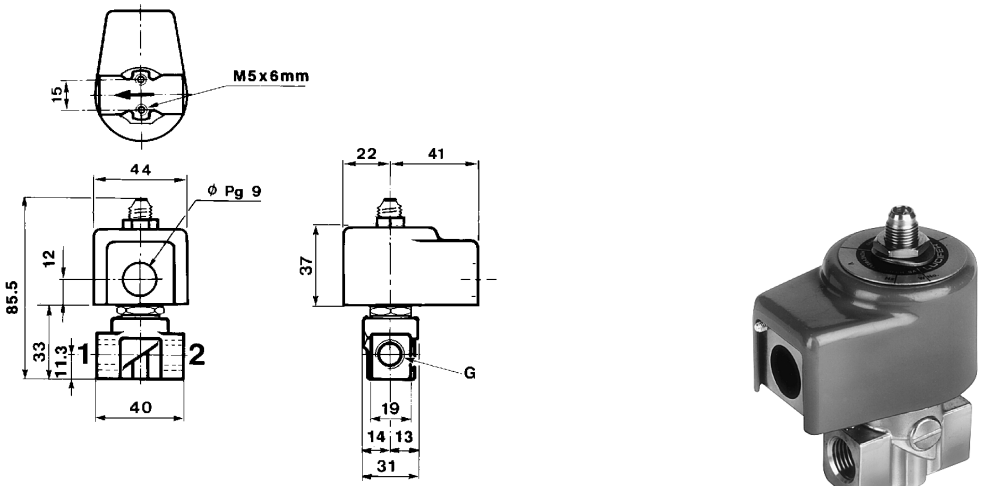

Dimension reference 4

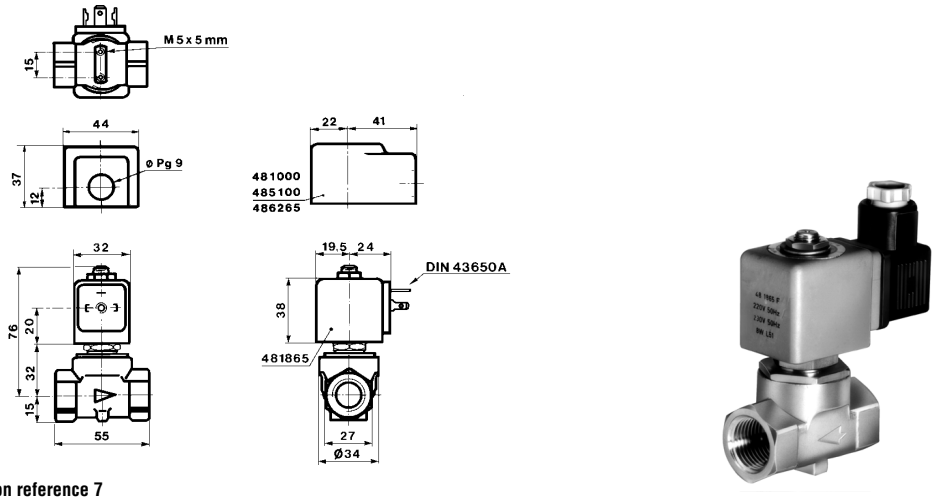

Dimension reference 7

Parker Lucifer SA
Fluid Control Division Europe
CH-1227 Carouge-Genève

General application valves 2/2 - Direct operated

Port size G	Orifice (mm)	Flow factors (L/min) Liquids kv	Liquids Qmax	Gases Qn	Admissible differential pressure bar Min	Max DC	Max AC	Fluid temp. °C Gas	Liquid	Oil	Seat disc	Reference numbers Global valve reference	Valve reference no.	Housing	Coil	Power consumption (W) DC	AC	Wt. (g)	El. Part Group *	Dim ref.
Brass body/Pipe mounting																				
1/4	5	11	11.5	750	0	-	5	100	100	100	FKM	7125KBG2SV00	**125K01**	**4269**	**484990**	-	11	430	4	3
	5	11	11.5	750	0	1.5	-	100	100	100	FKM			**4269**	**485400**	13	-	430	4	
Brass body/Sub-base mounting																				
SB	1.5	1.6	6	80	0	20	20	100	100	100	FKM	7121FBF4GV00	**E121F4406**	**2995**	**481865**	9	8	250		12
	1.5	1.6	6	80	0	20	20	120	120	120	FKM			**4270**	**481000**	8	8	370		
	1.5	1.5	12.5	80	0	25	60	75	75	75	PCTFE	7121FBF4GF00	**E121F44**	**2995**	**481865**	9	8	250	2	12
	1.5	1.5	12.5	80	0	30	70	75	75	75	PCTFE			**4270**	**481000**	8	8	370	2	
	1.5	1.5	12.5	80	0	55	70	75	75	75	PCTFE			**4270**	**486265**	14	14	380	2	
	1.5	1.5	15	80	0	25	60	100	100	100	Ruby	7121FBF4GR00	**121F67**	**2995**	**481865**	9	8	255	2	12
	1.5	1.5	15	80	0	30	75	130	130	130	Ruby			**4270**	**481000**	8	8	375	2	
	1.5	1.5	15	80	0	55	100	120	120	120	Ruby			**4270**	**486265**	14	14	385	2	
	2.5	3.5	8.5	220	0	7	14	100	100	100	FKM	7121FBF4LV00	**121F4706**	**2995**	**481865**	9	8	250	2	12
	2.5	3.5	8.5	220	0	9	14	120	120	120	FKM			**4270**	**481000**	8	8	370	2	
	2.5	3.5	8.5	220	0	14	14	120	120	120	FKM			**4270**	**486265**	14	14	380	2	
	2.5	3.5	25	220	0	10	28	75	75	75	PCTFE	7121FBF4LF00	**121F47**	**2995**	**481865**	9	8	250	2	12
	2.5	3.5	25	220	0	12	34	75	75	75	PCTFE			**4270**	**481000**	8	8	370	2	
	2.5	3.5	25	220	0	22	50	75	75	75	PCTFE			**4270**	**486265**	14	14	380	2	
	2.5	3.5	25	220	0	10	28	100	100	100	Ruby	7121FBF4LR00	**121F63**	**2995**	**481865**	9	8	255	2	12
	2.5	3.5	25	220	0	12	34	130	130	130	Ruby			**4270**	**481000**	8	8	375	2	
	2.5	3.5	25	220	0	22	50	120	120	120	Ruby			**4270**	**486265**	14	14	385	2	
	3	4.5	9	315	0	7	10	100	100	100	FKM	7121FBF4NV00	**E121F4302**	**2995**	**481865**	9	8	250	2	12
	3	4.5	9	315	0	8.5	10	120	120	120	FKM			**4270**	**481000**	8	8	370	2	
	3	4.5	9	315	0	10	10	120	120	120	FKM			**4270**	**486265**	14	14	380	2	
	3	4.5	27	315	0	7	20	75	75	75	PCTFE	7121FBF4NF00	**E121F43**	**2995**	**481865**	9	8	250	2	12
	3	4.5	27	315	0	8.5	25	75	75	75	PCTFE			**4270**	**481000**	8	8	370	2	
	3	4.5	27	315	0	15	36	75	75	75	PCTFE			**4270**	**486265**	14	14	380	2	
	3	4.5	27	320	0	7	20	100	100	100	Ruby	7121FBF4NR00	**121F64**	**2995**	**481865**	9	8	255	2	12
	3	4.5	27	320	0	8.5	25	130	130	130	Ruby			**4270**	**481000**	8	8	375	2	
	3	4.5	27	320	0	15	36	120	120	120	Ruby			**4270**	**486265**	14	14	385	2	

Magnetic latch control

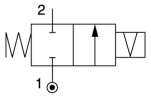

Normally closed

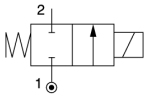

Notes:

* See Electrical Parts Group table at end of section

Parker Lucifer SA
Fluid Control Division Europe
CH-1227 Carouge-Genève

General application valves 2/2 - Direct operated

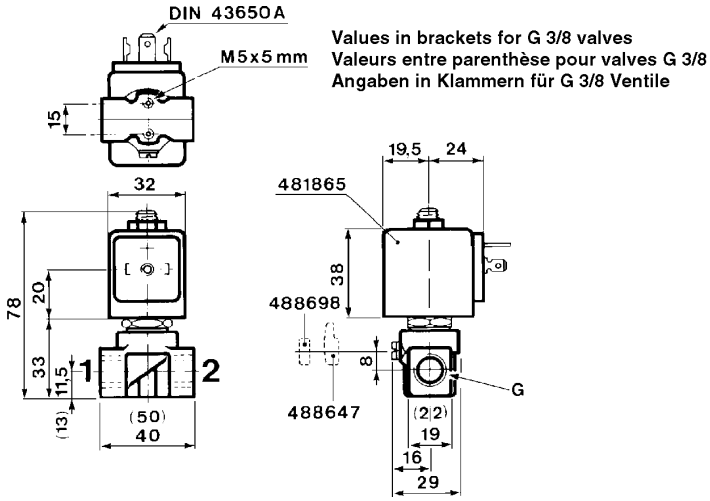



Dimension reference 3

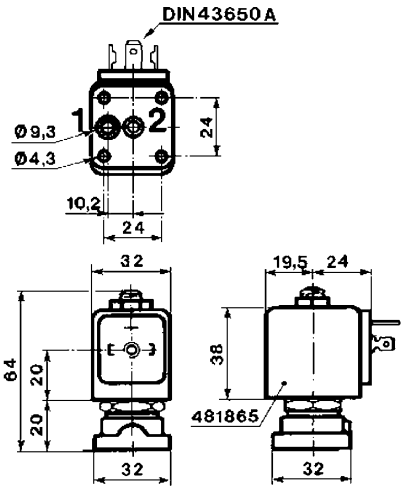

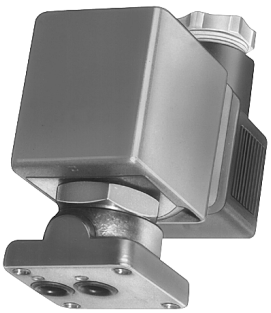

Dimension reference 12

Parker Lucifer SA
Fluid Control Division Europe
CH-1227 Carouge-Genève

General application valves for dry or lubricated air, neutral gases and liquids

2/2

Applications

Magnalift valves are recommended in applications where the minimum pressure cannot be held at a sufficient level, i.e. where the effective supply pressure may be zero. This concerns applications like filling/emptying tanks by gravity and any other applications with a minimum pressure of zero.





Magnalift

Port size	Orifice (mm)	Flow factors (L/min)			Admissible differential pressure bar			Fluid temp. °C			Seat disc	Reference numbers				Power consumption (W)		Wt. (g)	Dim ref.
		Liquids		Gases	Min	Max		Gas	Liquid	Oil		Global valve reference	Valve reference no.	Housing	Coil	DC	AC		
G		kv	Qmax	Qn		DC	AC												

Brass body/Pipe mounting

Normally closed

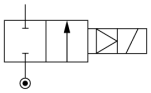

3/8	15	65	65	4500	0	10	-	100	-	100	FKM	7221GBG3VVH0	**221G2330**	**2995**	**481865** [1]	9	-	630	10
	15	65	65	4500	0	10	10	65	-	65	FKM			**4270.06**	**492070** [1]	8	8	1000	
	15	65	65	4500	0	10	10	75	-	75	FKM			**4270.06**	**492190** [1]	9	11	1000	
	15	65	65	4500	0	-	16	100	-	100	FKM	7221GBG3VV00	**221G23**	**2995**	**481865**	9	8	630	10
	15	65	65	4500	0	-	16	120	-	120	FKM			**4270**	**481000**	8	8	750	
	15	65	65	4500	0	7	20	120	-	140	FKM			**4270**	**486265**	14	14	760	
	15	65	65	4500	0	10	-	100	75	100	NBR	7221GBG3VNH0	**221G1330**	**2995**	**481865** [1]	9	-	630	10
	15	65	65	4500	0	10	10	65	65	65	NBR			**-**	**492070** [1]	8	8	1000	
	15	65	65	4500	0	10	10	75	75	75	NBR			**-**	**492190** [1]	9	11	1000	
	15	65	65	4500	0	-	16	100	75	100	NBR	7221GBG3VN00	**221G13**	**2995**	**481865**	-	8	630	10
	15	65	65	4500	0	-	16	100	75	100	NBR			**4270**	**481000**	-	8	750	
	15	65	65	4500	0	7	-	100	75	100	NBR			**4270**	**486265**	14	-	760	
1/2	15	65	65	4500	0	-	16	75	-	75	FKM	7221GBG4VV1D	**221G25001D**	**-**	**483250**	-	8	1605	3846
	15	65	65	4500	0	10	-	100	-	100	FKM	7221GBG4VVH0	**221G2530**	**2995**	**481865** [1]	9	-	640	10
	15	65	65	4500	0	10	10	65	-	65	FKM			**-**	**492070** [1]	8	8	1010	
	15	65	65	4500	0	10	10	75	-	75	FKM			**-**	**492190** [1]	9	11	1010	
	15	65	65	4500	0	-	16	100	-	100	FKM	7221GBG4VV00	**221G25**	**2995**	**481865**	-	8	630	10
	15	65	65	4500	0	-	16	120	-	120	FKM			**4270**	**481000**	-	8	760	
	15	65	65	4500	0	7	20	120	-	140	FKM			**4270**	**486265**	14	14	760	
	15	65	65	4500	0	10	-	100	75	100	NBR	7221GBG4VNH0	**221G1530**	**2995**	**481865** [1]	9	-	640	10
	15	65	65	4500	0	10	10	65	65	65	NBR			**-**	**492070** [1]	8	9	1010	
	15	65	65	4500	0	10	10	75	75	75	NBR			**-**	**492190** [1]	9	11	1010	
	15	65	65	4500	0	-	16	100	75	100	NBR	7221GBG4VN00	**221G15**	**2995**	**481865**	-	8	640	10
	15	65	65	4500	0	-	16	100	75	100	NBR			**4270**	**481000**	-	8	760	
	15	65	65	4500	0	7	-	100	75	100	NBR			**4270**	**486265**	14	-	770	
3/4	15	80	80	6000	0	-	16	75	-	75	FKM	7221GBG51V1D	**221G26001D**	**-**	**483250**	-	8	1635	3847

Table continued on page 18

Notes:

1. Valves with model number ending by 30 or 31 are mainly equipped with electrical parts EEx me II T3/T4 No. 492190 or EEx m II T4/T5 No. 492070 or with standard DC coils.

Parker Lucifer SA
Fluid Control Division Europe
CH-1227 Carouge-Genève

General application valves 2/2 - Magnalift

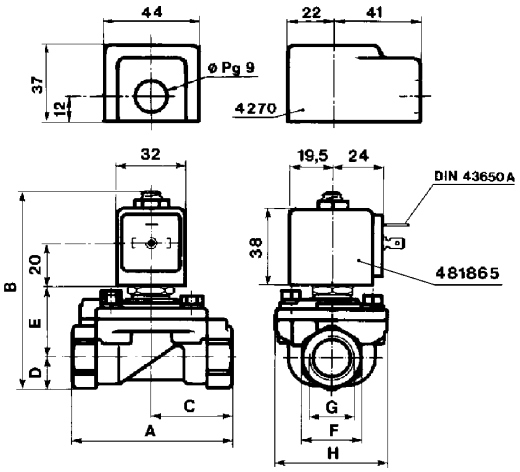

	A mm	B mm	C mm	D mm	E mm	F mm	G inch	H mm
G15/25	75	93	37.5	15	34	27	1/2	53
G13/23	75	93	37.5	15	34	27	3/8	53
G16/26	80	95.5	40	17.5	34	32	3/4	53
G17/27	85	102.5	42.5	22.5	36	41	1	53
G21	100	108	50	23	41	41	1	70



Dimension reference 10

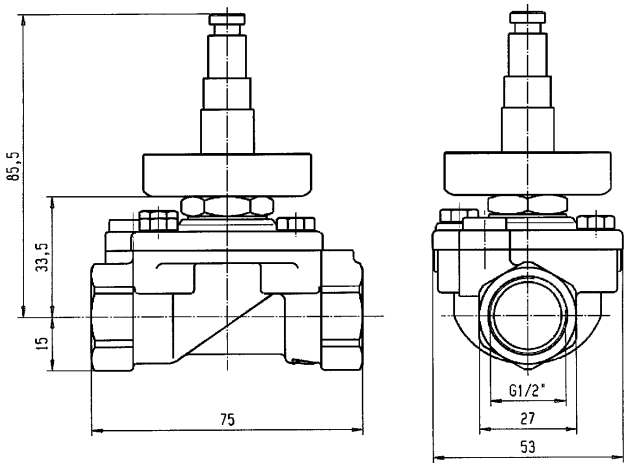

Dimension reference 3846

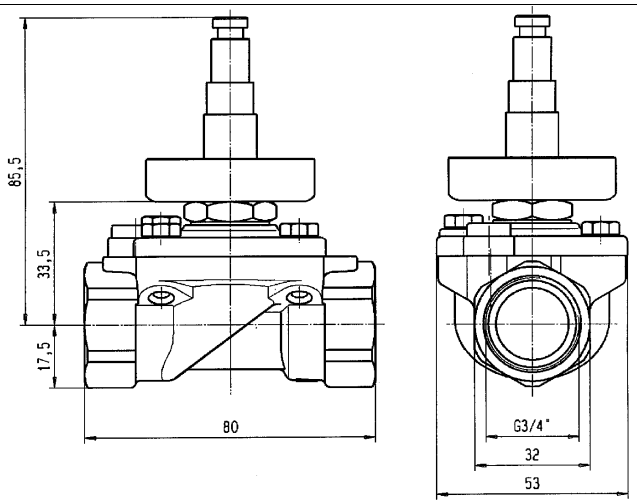

Dimension reference 3847

Parker Lucifer SA
Fluid Control Division Europe
CH-1227 Carouge-Genève

General application valves 2/2 - Magnalift

Brass body/Pipe mounting

Normally closed

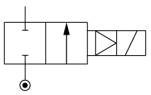

Port size G	Orifice (mm)	Flow factors (L/min) Liquids kv	Liquids Qmax	Gases Qn	Admissible differential pressure bar Min	Max DC	Max AC	Fluid temp. °C Gas	Liquid	Oil	Seat disc	Reference numbers Global valve reference	Valve reference no.	OR Housing	Coil	Power consumption (W) DC	AC	Wt. (g)	Dim ref.
3/4	15	80	80	6000	0	10	-	100	-	100	FKM	7221GBG51VH0	**221G2630**	**2995**	**481865** [1]	9	-	670	10
	15	80	80	6000	0	10	10	65	-	65	FKM			**-**	**492070** [1]	8	8	1040	
	15	80	80	6000	0	10	10	75	-	75	FKM			**-**	**492190** [1]	9	11	1040	
	15	80	80	6000	0	-	16	100	-	100	FKM	7221GBG51V00	**221G26**	**2995**	**481865**	-	8	670	10
	15	80	80	6000	0	-	16	120	-	120	FKM			**4270**	**481000**	-	8	790	
	15	80	65	6000	0	7	20	120	-	140	FKM			**4270**	**486265**	14	14	800	
	15	80	80	6000	0	10	-	100	75	100	NBR	7221GBG51NH0	**221G1630**	**2995**	**481865** [1]	9	-	670	10
	15	80	80	6000	0	10	10	65	65	65	NBR			**-**	**492070** [1]	8	8	1040	
	15	80	80	6000	0	10	10	75	75	75	NBR			**-**	**492190** [1]	9	11	1040	
	15	80	80	6000	0	-	16	100	75	100	NBR	7221GBG51N00	**221G16**	**2995**	**481865**	-	8	670	10
	15	80	80	6000	0	-	16	100	75	100	NBR			**4270**	**481000**	-	8	790	
	15	80	80	6000	0	7	-	100	75	100	NBR			**4270**	**486265**	14	-	800	
1	15	80	80	6000	0	-	16	75	-	75	FKM	7221GBG61V1D	**221G27001D**	**-**	**483250**	-	8	1775	3848
	15	80	80	6000	0	10	-	100	-	100	FKM	7221GBG61VH0	**221G2730**	**2995**	**481865** [1]	9	-	810	10
	15	80	80	6000	0	10	10	65	-	65	FKM			**-**	**492070** [1]	8	8	1180	
	15	80	80	6000	0	10	10	75	-	75	FKM			**-**	**492190** [1]	9	11	1180	
	15	80	80	6000	0	-	16	100	-	100	FKM	7221GBG61V00	**221G27**	**2995**	**481865**	-	8	810	10
	15	80	80	6000	0	-	16	120	-	120	FKM			**4270**	**481000**	-	8	930	
	15	80	65	6000	0	7	20	120	-	120	FKM			**4270**	**486265**	14	14	940	
	15	80	80	6000	0	10	-	100	75	100	NBR	7221GBG61NH0	**221G1730**	**2995**	**481865** [1]	9	-	810	10
	15	80	80	6000	0	10	10	65	65	65	NBR			**-**	**492070** [1]	8	8	1180	
	15	80	80	6000	0	10	10	75	75	75	NBR			**-**	**492190** [1]	9	11	1180	
	15	80	80	6000	0	-	16	100	75	100	NBR	7221GBG61N00	**221G17**	**2995**	**481865**	-	8	810	10
	15	80	80	6000	0	-	16	100	75	100	NBR			**4270**	**481000**	-	8	930	
	15	80	80	6000	0	7	-	100	75	100	NBR			**4270**	**486265**	14	-	940	
	25	160	160	14000	0	-	16	100	-	100	FKM	7221GBG64V00	**221G2106**	**2995**	**481865**	-	8	1170	10
	25	160	160	14000	0	-	16	100	-	120	FKM			**4270**	**481000**	-	8	1290	
	25	160	160	14000	0	6	16	100	-	120	FKM			**4270**	**486265**	14	14	1300	
	25	170	160	14000	0	10	-	100	-	100	FKM	7221GBG64VH0	**221G2136**	**2995**	**481865**	9	-	1170	10
	25	170	160	14000	0	10	10	65	-	65	FKM			**-**	**492070** [1]	8	8	1540	
	25	170	160	14000	0	10	10	75	-	75	FKM			**-**	**492190**	9	11	1540	
	25	170	160	14000	0	10	-	100	75	100	NBR	7221GBG64NH0	**221G2130**	**2995**	**481865** [1]	9	-	1170	10
	25	170	160	14000	0	10	10	65	65	65	NBR			**-**	**492070** [1]	8	8	1540	
	25	170	160	14000	0	10	10	75	75	75	NBR			**-**	**492190** [1]	9	11	1540	
	25	160	160	14000	0	-	16	100	75	100	NBR	7221GBG64N00	**221G21**	**2995**	**481865**	-	8	1170	10
	25	160	160	14000	0	-	16	100	75	100	NBR			**4270**	**481000**	-	8	1290	
	25	160	160	14000	0	6	-	100	75	100	NBR			**4270**	**486265**	14	-	1300	

Table continued on page 20

Notes:

1. Valves with model number ending by 30 or 31 are mainly equipped with electrical parts EEx me II T3/T4 No. 492190 or EEx m II T4/T5 No. 492070 or with standard DC coils.

Parker Lucifer SA
Fluid Control Division Europe
CH-1227 Carouge-Genève

Tel: +45 63 12 83 00 | Email: ps@hymatik.com | www.hymatik.com | Hvidkaervej 27a, DK-5250 Odense SV, Denmark

General application valves 2/2 - Magnalift

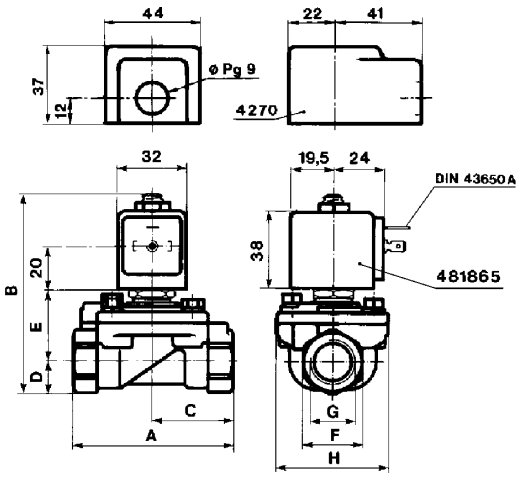

	A mm	B mm	C mm	D mm	E mm	F mm	G inch	H mm
G15/25	75	93	37.5	15	34	27	1/2	53
G13/23	75	93	37.5	15	34	27	3/8	53
G16/26	80	95.5	40	17.5	34	32	3/4	53
G17/27	85	102.5	42.5	22.5	36	41	1	53
G21	100	108	50	23	41	41	1	70



Dimension reference 10

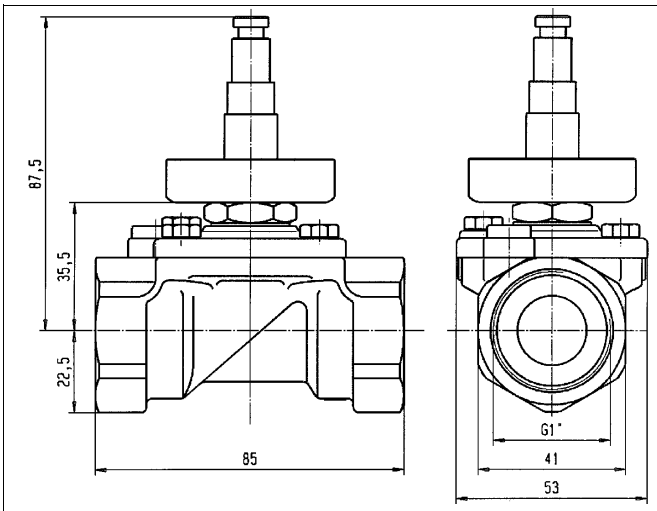

Dimension reference 3848

Parker Lucifer SA
Fluid Control Division Europe
CH-1227 Carouge-Genève

General application valves 2/2 - Magnalift

Port size	Orifice (mm)	Flow factors (L/min)			Admissible differential pressure bar			Fluid temp. °C			Seat disc	Reference numbers				Power consumption (W)		Wt. (g)	Dim ref.
		Liquids		Gases	Min	Max		Gas	Liquid	Oil		Global valve reference	Valve reference no.	Housing	Coil	DC	AC		
G		kv	Qmax	Qn		DC	AC												

Brass body/Pipe mounting

Normally open

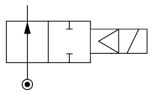

3/8	15	43	43	-	0	8.5	8.5	85	85	85	FKM	72228BG3TV00	**222G3306**	**4270**	**486265**	14	14	940	102
1/2	15	58	58	-	0	8.5	8.5	85	85	85	FKM	72228BG4UV00	**222G3506**	**4270**	**486265**	14	14	940	102
3/4	19	72	72	-	0	8.5	8.5	85	85	85	FKM	72228BG5VV00	**222G3606**	**4270**	**486265**	14	14	940	102

303 Stainless steel body/Pipe mounting

Normally closed

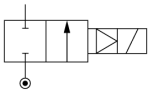

3/8	15	42	42	-	0	-	7	85	85	85	FKM	72218RG3TV00	**221G5306**	**2995**	**481865**	-	8	930	102
	15	42	42	-	0	-	7	85	85	85	FKM			**4270**	**481000**	-	8	1050	
	15	42	42	-	0	2.8	-	85	85	85	FKM			**4270**	**486265**	14	-	1060	
1/2	15	54	54	-	0	-	7	85	85	85	FKM	72218RG4UV00	**221G5506**	**2995**	**481865**	-	8	930	102
	15	54	54	-	0	-	7	85	85	85	FKM			**4270**	**481000**	-	8	1050	
	15	54	54	-	0	2.8	-	85	85	85	FKM			**4270**	**486265**	14	-	1060	
3/4	19	71	71	-	0	-	7	85	85	85	FKM	72218RG5VV00	**221G5606**	**2995**	**481865**	-	8	930	102
	19	71	71	-	0	-	7	85	85	85	FKM			**4270**	**481000**	-	8	1050	
	19	71	71	-	0	2.8	-	85	85	85	FKM			**4270**	**486265**	14	-	1060	

303 Stainless steel body/Pipe mounting

Normally open

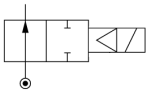

3/8	16	43	43	-	0	8.5	8.5	85	85	85	FKM	72228RG3TV00	**222G5306**	**4270**	**486265**	14	14	-	102
1/2	16	58	58	-	0	8.5	8.5	85	85	85	FKM	72228RG4UV00	**222G5506**	**4270**	**486265**	14	14	1050	102

Parker Lucifer SA
Fluid Control Division Europe
CH-1227 Carouge-Genève

General application valves 2/2 - Magnalift

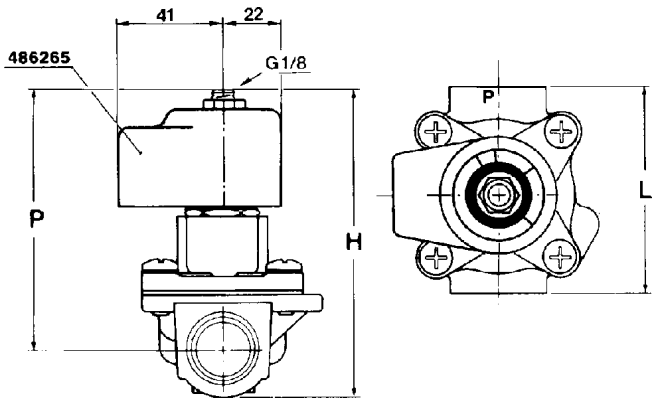

	H mm	P mm	L mm
221G53../222G33..	103	89	67
221G55../222G35..	103	89	67
221G56../222G36..	103	89	69



Dimension reference 102

Parker Lucifer SA
Fluid Control Division Europe
CH-1227 Carouge-Genève

General application valves for dry or lubricated air, neutral gases and liquids

2/2

Applications

Pilot operated valves are ideally suited to shut-off applications of liquids with high flow and pressure. A minimum operating pressure is required: refer to tables.





Pilot operated

Port size G	Orifice (mm)	Flow factors (L/min) Liquids kv	Liquids Qmax	Gases Qn	Admissible differential pressure bar Min	Max DC	Max AC	Fluid temp. °C Gas	Liquid	Oil	Seat disc	Reference numbers Global valve reference	Valve reference no.	OR Housing	Coil	Power consumption (W) DC	AC	Wt. (g)	El. Part Group *	Dim ref.

Brass body/Pipe mounting

Normally closed

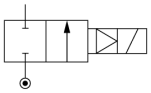

1/4	8	36	36	-	0.3 [2]	25	40	-	100	100	FKM	7321HBG2SV00	**E321H21** [1]	**2995**	**481865**	9	8	800	2	9
	8	36	36	-	0.3	30	40	-	100	100	FKM			**4270**	**481000**	8	8	920	2	
	8	36	36	-	0.3 [2]	40	40	-	100	100	FKM			**4270**	**486265**	14	14	930	2	
	8	36	36	1600	0.3 [2]	25	40	100	75	100	NBR	7321HBG2SN00	**E321H11** [1]	**2995**	**481865**	9	8	800	2	9
	8	36	36	1600	0.3 [2]	30	40	100	75	100	NBR			**4270**	**481000**	8	8	920	2	
	12	30	30	2150	0.3	10	10	100	100	100	FKM	-	**321K3106**	**8993**	**481180**	5	4	380	1	72
	12	30	30	2150	0.3	7	10	75	75	75	FKM			**8993**	**488980**	2.5	2	380	1	
	12	30	30	2150	0.3	10	10	100	75	100	NBR	-	**321K31**	**8993**	**481180**	5	4	380	1	72
	12	30	30	2150	0.3	7	10	75	75	75	NBR			**8993**	**488980**	2.5	2	380	1	
3/8	11	50	50	-	0.3 [2]	25	40	-	100	100	FKM	7321HBG3TV00	**E321H23** [1]	**2995**	**481865**	9	8	780	2	9
	11	50	50	-	0.3 [2]	30	40	-	100	120	FKM			**4270**	**481000**	8	8	900	2	
	11	50	50	-	0.3 [2]	40	40	-	100	140	FKM			**4270**	**486265**	14	14	910	2	
	11	50	50	2800	0.3 [2]	25	40	100	75	100	NBR	7321HBG3TN00	**E321H13** [1]	**2995**	**481865**	9	8	780	2	9
	11	50	50	2800	0.3 [2]	30	40	100	75	100	NBR			**4270**	**481000**	8	8	900	2	
	12	45	45	3050	0.3	10	10	100	100	100	FKM	-	**321K3306**	**8993**	**481180**	5	4	380	1	72
	12	45	45	3050	0.3	7	10	75	75	75	FKM			**8993**	**488980**	2.5	2	380	1	
	12	45	45	3050	0.3	10	10	100	75	100	NBR	-	**321K33**	**8993**	**481180**	5	4	380	1	72
	12	45	45	3050	0.3	7	10	75	75	75	NBR			**8993**	**488980**	2.5	2	380	1	
1/2	12	50	50	3400	0.3	10	10	100	100	100	FKM	-	**321K3506**	**8993**	**481180**	5	4	380	1	72
	12	50	50	3400	0.3	7	10	75	75	75	FKM			**8993**	**488980**	2.5	2	380	1	
	12	50	50	3400	0.3	10	10	100	75	100	NBR	-	**321K35**	**8993**	**481180**	5	4	380	1	72
	12	50	50	3400	0.3	7	10	75	75	75	NBR			**8993**	**488980**	2.5	2	380	1	
	14.5	60	60	-	0.3 [2]	25	40	-	100	100	FKM	7321HBG4UV00	**E321H25** [1]	**2995**	**481865**	9	8	740	2	9
	14.5	60	60	-	0.3 [2]	30	40	-	100	120	FKM			**4270**	**481000**	8	8	860	2	
	14.5	60	60	-	0.3 [2]	40	40	-	100	140	FKM			**4270**	**486265**	14	14	870	2	
	14.5	60	60	3150	0.3	10	-	75	75	-	NBR	-	**321H1590** [3]	**-**	**483580.01** [4]	0.4	-	715	7	75

Table continued on page 24

Notes:

* See Electrical Parts Group table at end of section

1. Pilot seat discs from ruby (synthetic)
2. Minimum pressure differential = 0.3 bar for opening and 0 bar for closing
3. Other coil-housing available: 488650.01, 488660.01, 4888670.01 (refer to electrical parts at end of this section)
4. This reference no. is for the complete electrical part (coil + housing)

Parker Lucifer SA
Fluid Control Division Europe
CH-1227 Carouge-Genève

Tel: +45 63 12 83 00 | Email: ps@hymatik.com | www.hymatik.com | Hvidkaervej 27a, DK-5250 Odense SV, Denmark

General application valves 2/2 - Pilot operated

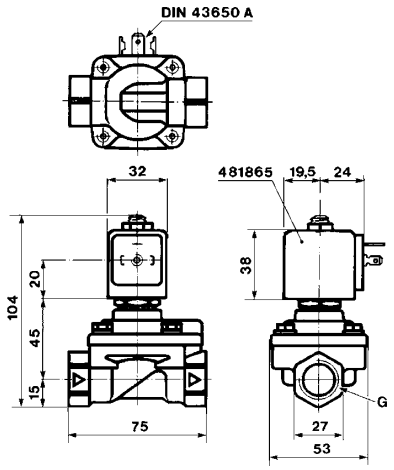



Dimension reference 9

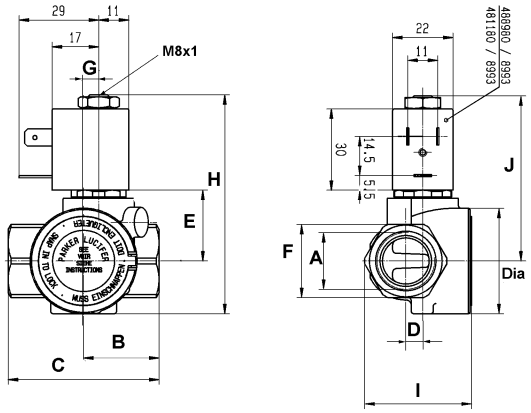

	A inch	B mm	C mm	D mm	E mm	F mm	G mm	H mm	I mm	J mm	Dia. mm
K31	1/4	25	50	6.2	26	27	5.5	81	39	61	40
K33	3/8	25	50	6.2	26	27	5.5	81	39	61	40
K35	1/2	27.5	55	6.2	26	27	5.5	81	39	61	40
K36	3/4	40	80	9	33.5	32	8	96.5	46	68.5	56
K37	1	42.5	85	14.2	33.5	41	8	96.5	56	68.5	56



Dimension reference 72

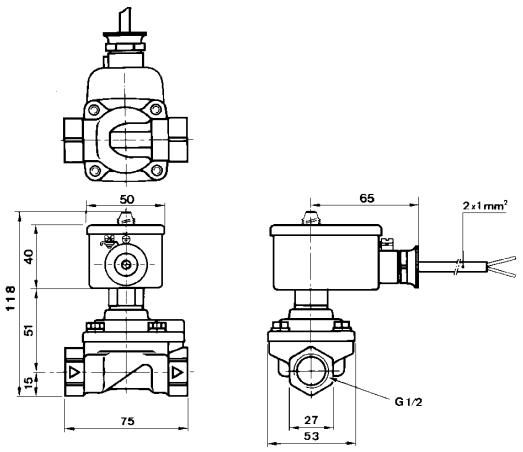

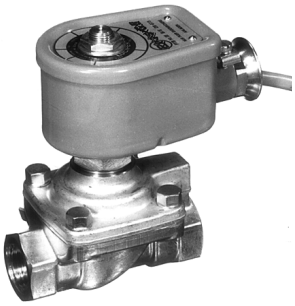

Dimension reference 75

Parker Lucifer SA
Fluid Control Division Europe
CH-1227 Carouge-Genève

General application valves 2/2 - Pilot operated

Brass body/Pipe mounting

Normally closed

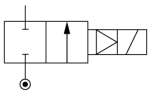

Port size G	Orifice (mm)	Flow factors (L/min) Liquids kv	Liquids Qmax	Gases Qn	Admissible differential pressure bar Min	Max DC	Max AC	Fluid temp. °C Gas	Liquid	Oil	Seat disc	Reference numbers Global valve reference	Valve reference no.	Housing	Coil	Power consumption (W) DC	AC	Wt. (g)	El. Part Group *	Dim ref.
1/2	14.5	60	60	3150	0.3 [2]	25	40	100	75	100	NBR	7321HBG4UN00	**E321H15** [1]	**2995**	**481865**	9	8	740	2	9
	14.5	60	60	3150	0.3 [2]	30	40	100	75	100	NBR			**4270**	**481000**	8	8	860	2	
3/4	18	100	100	9400	0.3	10	10	100	100	100	FKM	-	**321K3606**	**8993**	**481180**	5	4	590	1	72
	18	100	100	9400	0.3	7	10	75	75	75	FKM			**8993**	**488980**	2.5	2	590	1	
	18	100	100	9400	0.3	10	10	100	75	100	NBR	-	**321K36**	**8993**	**481180**	5	4	590	1	72
	18	100	100	9400	0.3	7	10	75	75	75	NBR			**8993**	**488980**	2.5	2	590	1	
	20	135	135	9500	0.3	16	16	100	100	100	FKM	7321GBG53V00	**E321G3606**	**2995**	**481865**	9	8	1430	2	11
	20	135	135	9500	0.3	16	16	120	100	120	FKM			**4270**	**481000**	8	8	1550	2	
	20	135	135	9500	0.3	16	16	100	75	100	NBR	7321GBG53N00	**E321G36** [3]	**2995**	**481865**	9	8	1430	2	11
	20	135	135	9500	0.3	16	16	100	75	100	NBR			**4270**	**481000**	8	8	1550	2	
1	18	110	110	10150	0.3	10	10	100	100	100	FKM	-	**321K3706**	**8993**	**481180**	5	4	735	1	72
	18	110	110	10150	0.3	7	10	75	75	75	FKM			**8993**	**488980**	2.5	2	735	1	
	18	110	110	10150	0.3	10	10	100	75	100	NBR	-	**321K37**	**8993**	**481180**	5	4	735	1	72
	18	110	110	10150	0.3	7	10	75	75	75	NBR			**8993**	**488980**	2.5	2	735	1	
	25	180	180	14000	0.3	16	16	100	100	100	FKM	7321GBG64V00	**E321G3706**	**2995**	**481865**	9	8	1230	2	11
	25	180	180	14000	0.3	16	16	120	100	120	FKM			**4270**	**481000**	8	8	1350	2	

Table continued on page 26

Notes:

* See Electrical Parts Group table at end of section

1. Pilot seat discs from ruby (synthetic)
2. Minimum pressure differential = 0.3 bar for opening and 0 bar for closing
3. Manual override and 4 position selector for controlled closure rate: see "Anti-waterhammer valves" section

Parker Lucifer SA
Fluid Control Division Europe
CH-1227 Carouge-Genève

Tel: +45 63 12 83 00 | Email: ps@hymatik.com | www.hymatik.com | Hvidkaervej 27a, DK-5250 Odense SV, Denmark

General application valves 2/2 - Pilot operated

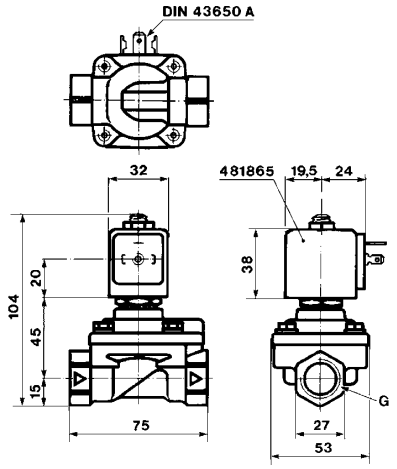



Dimension reference 9

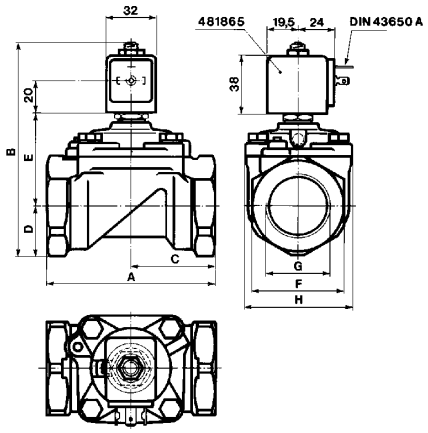

	A mm	B mm	C mm	D mm	E mm	F mm	G inch	H mm
G37	100	121	50	23	54	41	1	70
G36	100	121	50	23	54	41	3/4	70
G38	110	137.5	55	33	60.5	60	1 1/4	99
G39	140	144	75	33	67	60	1 1/2	99
G40	150	158.5	80	41.5	73	75	2	99



Dimension reference 11

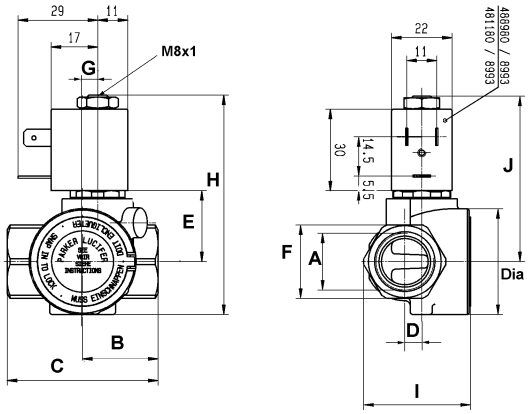

	A inch	B mm	C mm	D mm	E mm	F mm	G mm	H mm	I mm	J mm	Dia. mm
K31	1/4	25	50	6.2	26	27	5.5	81	39	61	40
K33	3/8	25	50	6.2	26	27	5.5	81	39	61	40
K35	1/2	27.5	55	6.2	26	27	5.5	81	39	61	40
K36	3/4	40	80	9	33.5	32	8	96.5	46	68.5	56
K37	1	42.5	85	14.2	33.5	41	8	96.5	56	68.5	56



Dimension reference 72

Parker Lucifer SA
Fluid Control Division Europe
CH-1227 Carouge-Genève

General application valves 2/2 - Pilot operated

Brass body/Pipe mounting

Normally closed

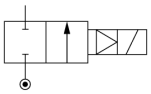

Port size G	Orifice (mm)	Flow factors (L/min) Liquids kv	Liquids Qmax	Gases Qn	Admissible differential pressure bar Min	Max DC	Max AC	Fluid temp. °C Gas	Liquid	Oil	Seat disc	Reference numbers Global valve reference	Valve reference no.	Housing	Coil	Power consumption (W) DC	AC	Wt. (g)	El. Part Group *	Dim ref.
1	25	185	185	14100	0.3	10	-	75	75	-	NBR	-	**321G3790** [1]	**-**	**483580.01** [2]	0.4	-	1205	7	76
	25	180	180	14000	0.3	16	16	75	75	75	NBR	7321GBG64N1D	**E321G37101D**	**-**	**483250**	8	8	2195	5	3849
	25	180	180	14000	0.3	16	16	100	75	100	NBR	7321GBG64N00	**E321G37** [3]	**2995**	**481865**	9	8	1230	2	11
	25	180	180	14000	0.3	16	16	100	75	100	NBR			**4270**	**481000**	8	8	1350	2	
1 1/4	28	280	280	18000	0.3	16	16	100	100	100	FKM	7321GBG76V00	**E321G3806**	**2995**	**481865**	9	8	1860	2	11
	28	280	280	18000	0.3	16	16	120	100	120	FKM			**4270**	**481000**	8	8	1980	2	
	28	280	280	18000	0.3	16	16	100	75	100	NBR	7321GBG76N00	**E321G38** [3]	**2995**	**481865**	9	8	1860	2	11
	28	280	280	18000	0.3	16	16	100	75	100	NBR			**4270**	**481000**	8	8	1980	2	
1 1/2	40	420	420	31500	0.3	7	16	100	100	100	FKM	7321GBG88V00	**E321G3906**	**2995**	**481865**	9	8	2560	2	11
	40	420	420	31500	0.3	8.5	16	120	100	120	FKM			**4270**	**481000**	8	8	2680	2	
	40	425	425	31000	0.5	10	-	75	75	-	NBR	-	**321G3990** [1]	**-**	**483580.01** [2]	0.4	-	2635	7	76

Table continued on page 28

Notes:

* See Electrical Parts Group table at end of section

1. Other coil-housing available: 488650.01, 488660.01, 4888670.01 (refer to electrical parts at end of this section)
2. This reference no. is for the complete electrical part (coil + housing)
3. Manual override and 4 position selector for controlled closure rate: see "Anti-waterhammer valves" section

Parker Lucifer SA
Fluid Control Division Europe
CH-1227 Carouge-Genève

Tel: +45 63 12 83 00 | Email: ps@hymatik.com | www.hymatik.com | Hvidkaervej 27a, DK-5250 Odense SV, Denmark

General application valves 2/2 - Pilot operated

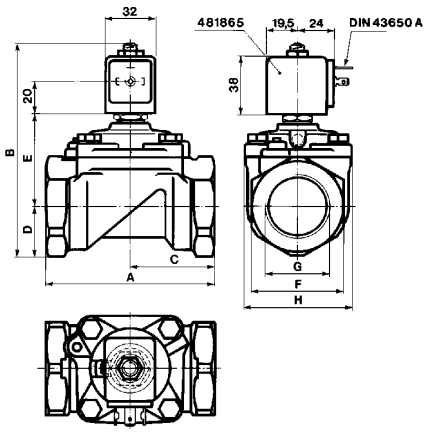

	A mm	B mm	C mm	D mm	E mm	F mm	G inch	H mm
G37	100	121	50	23	54	41	1	70
G36	100	121	50	23	54	41	3/4	70
G38	110	137.5	55	33	60.5	60	1 1/4	99
G39	140	144	75	33	67	60	1 1/2	99
G40	150	158.5	80	41.5	73	75	2	99



Dimension reference 11

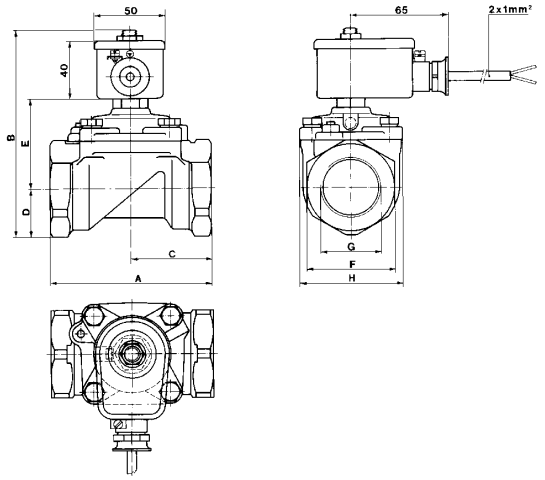

	A mm	B mm	C mm	D mm	E mm	F mm	G inch	H mm
G3790	100	135	50	23	60	41	1	70
G3990	140	158	75	33	73	60	1 1/2	99
G4090	150	172.5	80	41.5	79	75	2	99



Dimension reference 76

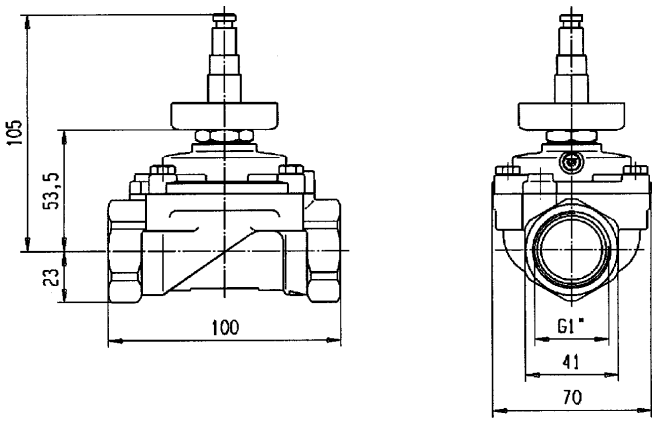

Dimension reference 3849

Parker Lucifer SA
Fluid Control Division Europe
CH-1227 Carouge-Genève

General application valves 2/2 - Pilot operated

Port size	Orifice (mm)	Flow factors (L/min)			Admissible differential pressure bar			Fluid temp. °C			Seat disc	Reference numbers				Power consumption (W)		Wt. (g)	El. Part Group *	Dim ref.
		Liquids		Gases	Min	Max		Gas	Liquid	Oil		Global valve reference	Valve reference no.	Housing	Coil	DC	AC			
G		kv	Qmax	Qn		DC	AC													

Brass body/Pipe mounting

Normally closed

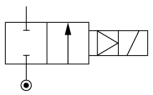

1 1/2	40	420	420	31500	0.3	8.5	16	75	75	75	NBR	7321GBG88N3D	**E321G39101D**	**-**	**483250**	8	8	3525	5	3850
	40	420	420	31500	0.3	7	16	100	75	100	NBR	7321GBG88N00	**E321G39** [1]	**2995**	**481865**	9	8	2560	2	11
	40	420	420	31500	0.3	8.5	16	100	75	100	NBR			**4270**	**481000**	8	8	2680	2	
	40	420	420	31500	0.3	16	16	100	75	100	NBR			**4270**	**486265**	14	14	2700	2	
2	40	540	540	40000	0.3	7	16	100	100	100	FKM	7321GBG99V00	**E321G4006**	**2995**	**481865**	9	8	2920	2	11
	40	540	540	40000	0.3	7	16	120	100	120	FKM			**4270**	**481000**	8	8	3040	2	
	40	540	540	38100	0.5	10	-	75	75	-	NBR	-	**321G4090** [2]	**-**	**483580.01** [3]	0.4	-	2885	7	76

Table continued on page 30

Notes:

* See Electrical Parts Group table at end of section

1. Manual override and 4 position selector for controlled closure rate: see "Anti-waterhammer valves" section
2. Other coil-housing available: 488650.01, 488660.01, 4888670.01 (refer to electrical parts at end of this section)
3. This reference no. is for the complete electrical part (coil + housing)

Parker Lucifer SA
Fluid Control Division Europe
CH-1227 Carouge-Genève

Tel: +45 63 12 83 00 | Email: ps@hymatik.com | www.hymatik.com | Hvidkaervej 27a, DK-5250 Odense SV, Denmark

General application valves 2/2 - Pilot operated

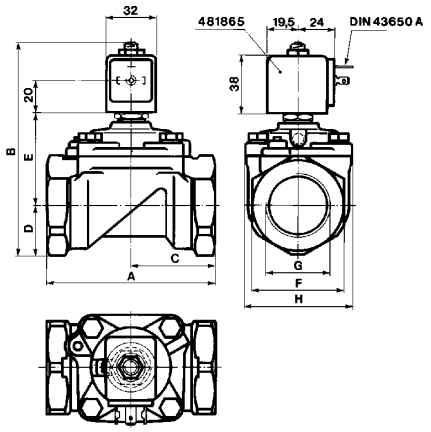

	A mm	B mm	C mm	D mm	E mm	F mm	G inch	H mm
G37	100	121	50	23	54	41	1	70
G36	100	121	50	23	54	41	3/4	70
G38	110	137.5	55	33	60.5	60	1 1/4	99
G39	140	144	75	33	67	60	1 1/2	99
G40	150	158.5	80	41.5	73	75	2	99



Dimension reference 11

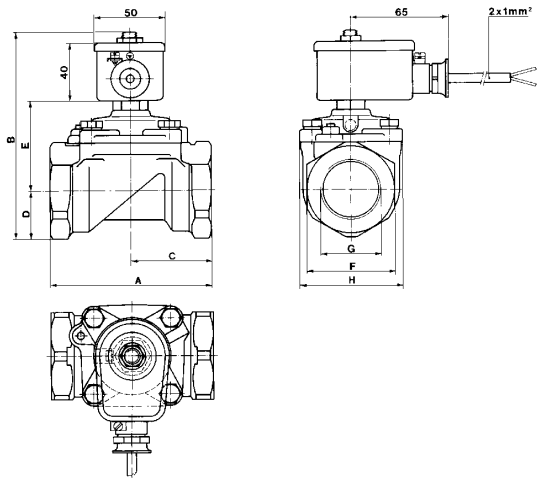

	A mm	B mm	C mm	D mm	E mm	F mm	G inch	H mm
G3790	100	135	50	23	60	41	1	70
G3990	140	158	75	33	73	60	1 1/2	99
G4090	150	172.5	80	41.5	79	75	2	99



Dimension reference 76

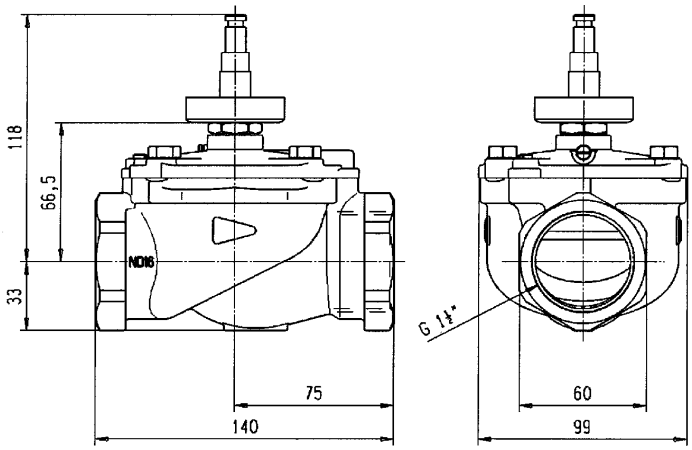

Dimension reference 3850

Parker Lucifer SA
Fluid Control Division Europe
CH-1227 Carouge-Genève

General application valves 2/2 - Pilot operated

Port size	Orifice (mm)	Flow factors (L/min)			Admissible differential pressure bar			Fluid temp. °C			Seat disc	Reference numbers				Power consumption (W)		Wt. (g)	El. Part Group *	Dim ref.
		Liquids		Gases	Min	Max		Gas	Liquid	Oil		Global valve reference	Valve reference no.	Housing	Coil	DC	AC			
G		kv	Qmax	Qn		DC	AC													

Brass body/Pipe mounting

Normally closed

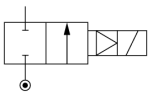

2	40	540	540	40000	0.3	8.5	16	75	75	75	NBR	7321GBG99N3D	**E321G40101D**	**-**	**483250**	8	8	3865	5	3851
	40	540	540	40000	0.3	7	16	100	75	100	NBR	7321GBG99N00	**E321G40** [1]	**2995**	**481865**	9	8	2900	2	11
	40	540	540	40000	0.3	8.5	16	100	75	100	NBR			**4270**	**481000**	8	8	3040	2	
	40	540	540	40000	0.3	16	16	100	75	100	NBR			**4270**	**486265**	14	14	3050	2	

Brass body/Pipe mounting

Normally open

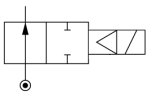

1/4	8	36	36	-	0.3 [3]	40	40	-	100	100	FKM	7322HBG2SV00	**322H7106** [2]	**2995**	**481865**	9	8	820		9
	8	36	36	-	0.3 [3]	40	40	-	120	120	FKM			**4270**	**481000**	8	8	940		
	8	36	36	-	0.3 [3]	40	40	-	140	140	FKM			**4270**	**486265**	14	14	950		
	8	36	36	1600	0.3 [3]	25	40	100	75	100	NBR	7322HBG2SN00	**322H71** [2]	**2995**	**481865**	9	8	840		9
	8	36	36	1600	0.3 [3]	30	40	100	75	100	NBR			**4270**	**481000**	8	8	960		

Table continued on page 32

Notes:

* See Electrical Parts Group table at end of section

1. Manual override and 4 position selector for controlled closure rate: see "Anti-waterhammer valves" section
2. Pilot seat discs from ruby (synthetic)
3. Minimum pressure differential = 0.3 bar for opening and 0 bar for closing

Parker Lucifer SA
Fluid Control Division Europe
CH-1227 Carouge-Genève

Tel: +45 63 12 83 00 | Email: ps@hymatik.com | www.hymatik.com | Hvidkaervej 27a, DK-5250 Odense SV, Denmark

General application valves 2/2 - Pilot operated

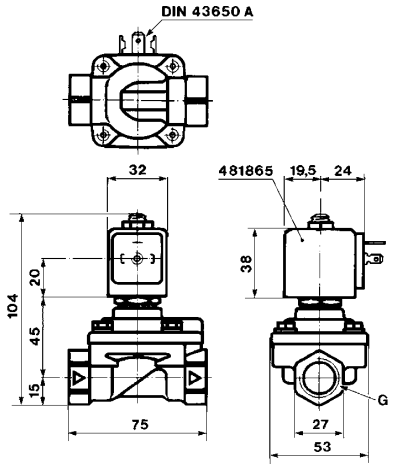



Dimension reference 9

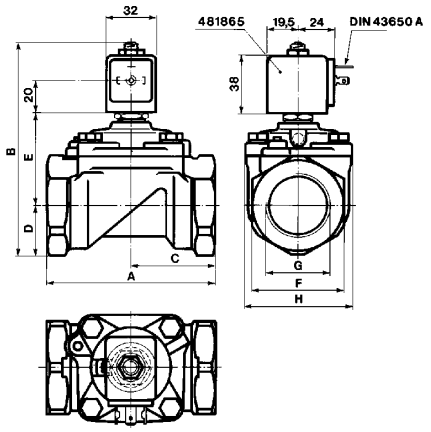

	A mm	B mm	C mm	D mm	E mm	F mm	G inch	H mm
G37	100	121	50	23	54	41	1	70
G36	100	121	50	23	54	41	3/4	70
G38	110	137.5	55	33	60.5	60	1 1/4	99
G39	140	144	75	33	67	60	1 1/2	99
G40	150	158.5	80	41.5	73	75	2	99



Dimension reference 11

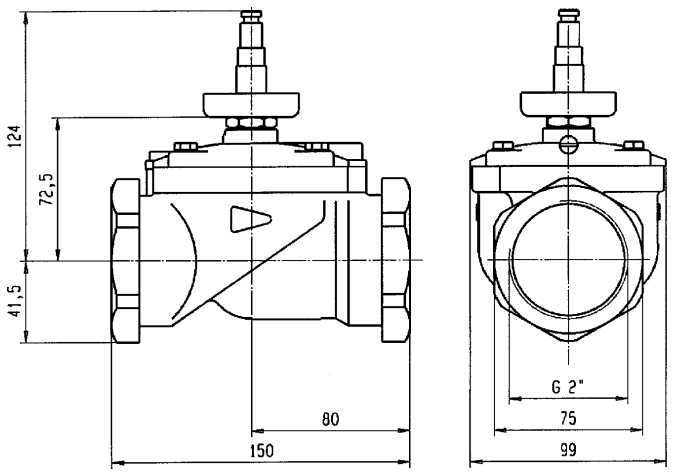

Dimension reference 3851

Parker Lucifer SA
Fluid Control Division Europe
CH-1227 Carouge-Genève

General application valves 2/2 - Pilot operated

Port size G	Orifice (mm)	Flow factors (L/min) Liquids kv	Qmax	Gases Qn	Admissible differential pressure bar Min	Max DC	AC	Fluid temp. °C Gas	Liquid	Oil	Seat disc	Reference numbers Global valve reference	Valve reference no.	Housing	Coil	Power consumption (W) DC	AC	Wt. (g)	El. Part Group *	Dim ref.
Normally open																				
Brass body/Pipe mounting																				
1/4	12	30	30	2150	0.3	12	12	100	100	100	FKM	7322KBG2SVW0	**322K4106**	**2995**	**481865**	9	8	490		73
	12	30	30	2150	0.3	12	12	120	100	120	FKM			**4270**	**481000**	8	8	610		
3/8	11	50	50	-	0.3 [2]	40	40	-	75	100	FKM	7322HBG3TV00	**322H7306** [1]	**2995**	**481865**	9	8	800		9
	11	50	50	-	0.3 [2]	40	40	-	75	100	FKM			**4270**	**481000**	8	8	920		
	11	50	50	-	0.3 [2]	40	40	-	140	140	FKM			**4270**	**486265**	14	14	930		
	11	50	50	3240	0.3 [2]	40	40	100	75	100	NBR	7322HBG3TN00	**322H73** [1]	**2995**	**481865**	9	8	800		9
	11	50	50	3240	0.3 [2]	40	40	100	75	100	NBR			**4270**	**481000**	8	8	920		
	12	45	45	3050	0.3	12	12	100	100	100	FKM	7322KBG3TVW0	**322K4306**	**2995**	**481865**	9	8	490		73
	12	45	45	3050	0.3	12	12	120	100	120	FKM			**4270**	**481000**	8	8	610		
1/2	12	50	50	3400	0.3	12	12	100	100	100	FKM	7322KBG4TVW0	**322K4506**	**2995**	**481865**	9	8	490		73
	12	50	50	3400	0.3	12	12	120	100	120	FKM			**4270**	**481000**	8	8	610		
	14.5	60	60	-	0.3 [2]	40	40	-	100	100	FKM	7322HBG4UV00	**322H7506** [1]	**2995**	**481865**	9	8	760		9
	14.5	60	60	-	0.3 [2]	40	40	-	100	120	FKM			**4270**	**481000**	8	8	880		
	14.5	60	60	-	0.3 [2]	40	40	-	100	140	FKM			**4270**	**486265**	14	14	890		
	14.5	60	60	3890	0.3 [2]	40	40	100	75	100	NBR	7322HBG4UN00	**322H75** [1]	**2995**	**481865**	9	8	760		9
	14.5	60	60	3890	0.3 [2]	40	40	100	75	100	NBR			**4270**	**481000**	8	8	880		
3/4	18	100	100	9400	0.3	12	12	100	100	100	FKM	7322KBG51VW0	**322K4606**	**2995**	**481865**	9	8	700		73
	18	100	100	9400	0.3	12	12	120	100	120	FKM			**4270**	**481000**	8	8	820		
	20	135	135	9500	0.3	16	16	100	100	100	FKM	7322GBG53V00	**322G3606**	**2995**	**481865**	9	8	1430		11
	20	135	135	9500	0.3	16	16	120	100	120	FKM			**4270**	**481000**	8	8	1550		
	20	135	135	9500	0.3	16	16	100	75	100	NBR	7322GBG53N00	**322G36**	**2995**	**481865**	9	8	1430		11
	20	135	135	9500	0.3	16	16	100	75	100	NBR			**4270**	**481000**	8	8	1550		
1	18	110	110	10150	0.3	12	12	100	100	100	FKM	7322KBG62VW0	**322K4706**	**2995**	**481865**	9	8	845		73
	18	110	110	10150	0.3	12	12	120	100	120	FKM			**4270**	**481000**	8	8	965		
	25	180	180	14000	0.3	16	16	100	100	100	FKM	7322GBG64V00	**322G3706**	**2995**	**481865**	9	8	1230		11
	25	180	180	14000	0.3	16	16	120	100	120	FKM			**4270**	**481000**	8	8	1350		
	25	180	180	14000	0.3	16	16	100	75	100	NBR	7322GBG64N00	**322G37**	**2995**	**481865**	9	8	1230		11
	25	180	180	14000	0.3	16	16	100	75	100	NBR			**4270**	**481000**	8	8	1350		
1 1/4	28	270	270	18000	0.3	16	16	100	100	100	FKM	7322GBG76V00	**322G3806**	**2995**	**481865**	9	8	1860		11
	28	270	270	18000	0.3	16	16	120	100	120	FKM			**4270**	**481000**	8	8	1980		
	28	270	270	18000	0.3	16	16	100	75	100	NBR	7322GBG76N00	**322G38**	**2995**	**481865**	9	8	1860		11
	28	270	270	18000	0.3	16	16	100	75	100	NBR			**4270**	**481000**	8	8	1980		
1 1/2	40	420	420	31500	0.3	12	12	100	100	100	FKM	7322GBG88V00	**322G3906**	**2995**	**481865**	9	8	2560		11
	40	420	420	31500	0.3	12	12	120	100	120	FKM			**4270**	**481000**	8	8	2680		
	40	420	420	31500	0.3	12	12	100	75	100	NBR	7322GBG88N00	**322G39**	**2995**	**481865**	9	8	2560		11
	40	420	420	31500	0.3	12	12	100	75	100	NBR			**4270**	**481000**	8	8	2680		
2	40	540	540	40000	0.3	12	12	100	100	100	FKM	7322GBG99V00	**322G4006**	**2995**	**481865**	9	8	2900		11
	40	540	540	40000	0.3	12	12	120	100	120	FKM			**4270**	**481000**	8	8	3040		
	40	540	540	40000	0.3	12	12	100	75	100	NBR	7322GBG99N00	**322G40**	**2995**	**481865**	9	8	2900		11
	40	540	540	40000	0.3	12	12	100	75	100	NBR			**4270**	**481000**	8	8	3040		

Table continued on page 34

Notes:

* See Electrical Parts Group table at end of section

1. Pilot seat discs from ruby (synthetic)
2. Minimum pressure differential = 0.3 bar for opening and 0 bar for closing

Parker Lucifer SA
Fluid Control Division Europe
CH-1227 Carouge-Genève

General application valves 2/2 - Pilot operated

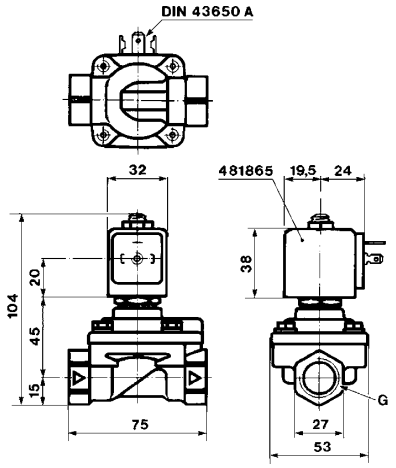



Dimension reference 9

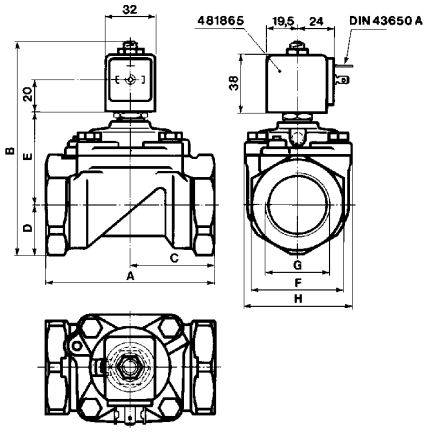

	A mm	B mm	C mm	D mm	E mm	F mm	G inch	H mm
G37	100	121	50	23	54	41	1	70
G36	100	121	50	23	54	41	3/4	70
G38	110	137.5	55	33	60.5	60	1 1/4	99
G39	140	144	75	33	67	60	1 1/2	99
G40	150	158.5	80	41.5	73	75	2	99



Dimension reference 11

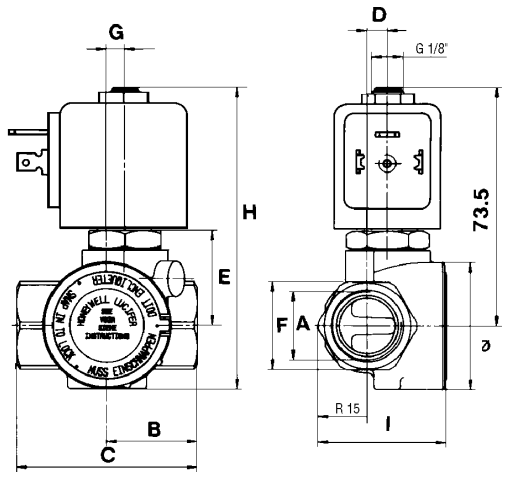

	A inch	B mm	C mm	D mm	E mm	F mm	G mm	H mm	I mm	J mm	Dia. mm
K41	1/4	25	50	6.2	29	27	5.5	93.5	39	73.5	40
K43	3/8	25	50	6.2	29	27	5.5	93.5	39	73.5	40
K45	1/2	27.5	55	6.2	29	27	5.5	93.5	39	73.5	40
K46	3/4	40	80	9	36.5	32	8	109	46	81	56
K47	1	42.5	85	14.2	36.5	41	8	109	56	81	56



Dimension reference 73

Parker Lucifer SA
Fluid Control Division Europe
CH-1227 Carouge-Genève

Tel: +45 63 12 83 00 | Email: ps@hymatik.com | www.hymatik.com | Hvidkaervej 27a, DK-5250 Odense SV, Denmark

General application valves 2/2 - Pilot operated

Brass body/Pipe mounting

Magnetic latch control

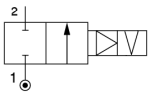

325 K41

Port size G	Orifice (mm)	Flow factors (L/min) Liquids kv	Qmax	Gases Qn	Admissible differential pressure bar Min	Max DC	AC	Fluid temp. °C Gas	Liquid	Oil	Seat disc	Reference numbers Global valve reference	Valve reference no.	OR Housing	Coil	Power consumption (W) DC	AC	Wt. (g)	El. Part Group *	Dim ref.
1/4	12	30	30	2150	0.3	-	12	100	100	100	FKM	7325KBG2SVW0	**325K4106**	**4269**	**484990**	-	11	630	4	73
	12	30	30	2150	0.3	12	-	100	100	100	FKM			**4269**	**485400**	13	-	630	4	
3/8	12	45	45	3050	0.3	-	12	100	100	100	FKM	7325KBG3TVW0	**325K4306**	**4269**	**484990**	-	11	630	4	73
	12	45	45	3050	0.3	12	-	100	100	100	FKM			**4269**	**485400**	13	-	630	4	
1/2	12	50	50	3400	0.3	-	12	100	100	100	FKM	7325KBG4TVW0	**325K4506**	**4269**	**484990**	-	11	630	4	73
	12	50	50	3400	0.3	12	-	100	100	100	FKM			**4269**	**485400**	13	-	630	4	
3/4	18	100	100	9400	0.3	-	12	100	100	100	FKM	7325KBG51VW0	**325K4606**	**4269**	**484990**	-	11	840	4	73
	18	100	100	9400	0.3	12	-	100	100	100	FKM			**4269**	**485400**	13	-	840	4	
1	18	110	110	10150	0.3	-	12	100	100	100	FKM	7325KBG62VW0	**325K4706**	**4269**	**484990**	-	11	985	4	73
	18	110	110	10150	0.3	12	-	100	100	100	FKM			**4269**	**485400**	13	-	985	4	

Brass body/Sub-base mounting

Normally closed

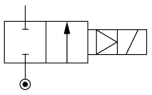

SB	14	45	45	-	0.3 [2]	25	40	-	100	100	FKM	7321FBF3TV00	**E321F3202** [1]	**2995**	**481865**	9	8	650	2	13
	14	45	45	-	0.3 [2]	30	40	-	100	120	FKM			**4270**	**481000**	8	8	770	2	
	14	45	45	-	0.3 [2]	40	40	-	100	120	FKM			**4270**	**486265**	14	14	780	2	
	14	45	45	2100	0.3	25	40	100	75	100	NBR	7321FBF3TN00	**E321F32** [1]	**2995**	**481865**	9	8	650	2	13
	14	45	45	2100	0.3	30	40	100	75	100	NBR			**4270**	**481000**	8	8	770	2	
	14	45	45	2100	0.3	40	40	100	75	100	NBR			**4270**	**486265**	14	14	780	2	

Brass body/Sub-base mounting

Normally open

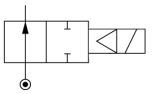

SB	14	45	45	-	0.3 [2]	40	40	-	100	100	FKM	7322FBF3TV00	**322F7206** [1]	**2995**	**481865**	9	8	650		13
	14	45	45	-	0.3 [2]	40	40	-	100	120	FKM			**4270**	**481000**	8	8	770		
	14	45	45	-	0.3 [2]	40	40	-	-	140	FKM			**4270**	**486265**	14	14	780		
	14	45	45	2100	0.3 [2]	40	40	75	75	75	NBR	7322FBF3TN00	**322F72** [1]	**2995**	**481865**	9	8	650		13
	14	45	45	2100	0.3 [2]	40	40	75	75	75	NBR			**4270**	**481000**	8	8	770		

Notes:

* See Electrical Parts Group table at end of section

1. Pilot seat discs from ruby (synthetic)
2. Minimum pressure differential = 0.3 bar for opening and 0 bar for closing

Parker Lucifer SA
Fluid Control Division Europe
CH-1227 Carouge-Genève

General application valves 2/2 - Pilot operated

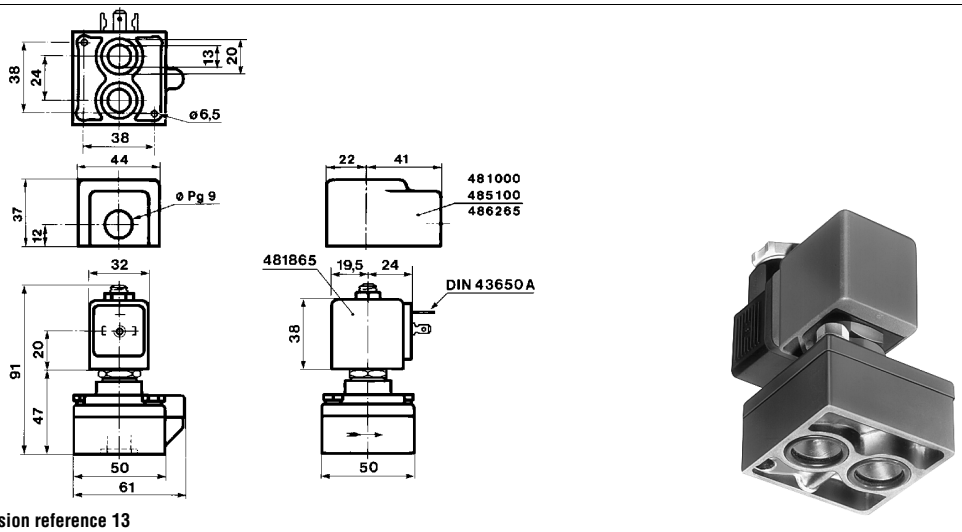

Dimension reference 13

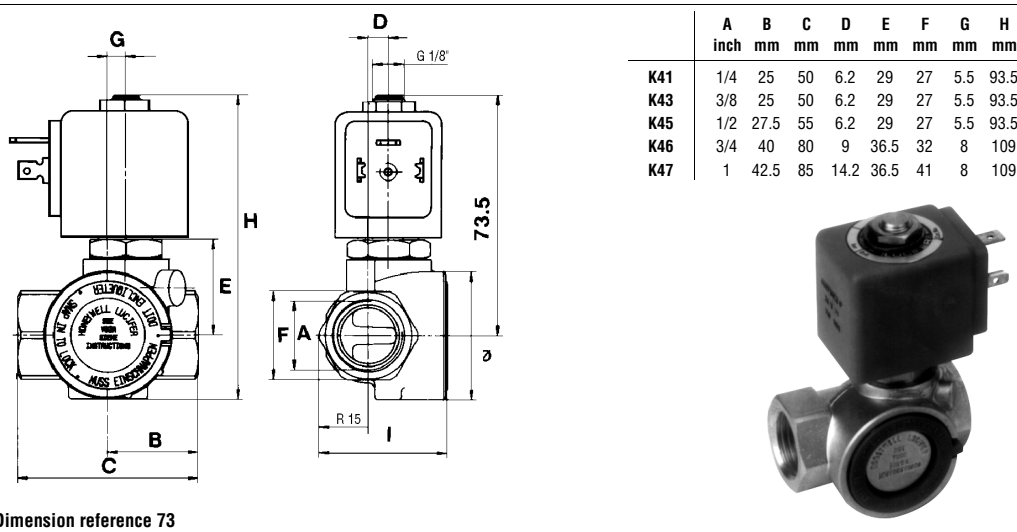

Dimension reference 73

	A inch	B mm	C mm	D mm	E mm	F mm	G mm	H mm	I mm	J mm	Dia. mm
K41	1/4	25	50	6.2	29	27	5.5	93.5	39	73.5	40
K43	3/8	25	50	6.2	29	27	5.5	93.5	39	73.5	40
K45	1/2	27.5	55	6.2	29	27	5.5	93.5	39	73.5	40
K46	3/4	40	80	9	36.5	32	8	109	46	81	56
K47	1	42.5	85	14.2	36.5	41	8	109	56	81	56

Parker Lucifer SA
Fluid Control Division Europe
CH-1227 Carouge-Genève

Electrical parts options with 2/2 general application valves for dry or lubricated air, neutral gases and liquids

El.part Group	Coil	Protection class	Protection class / Temperature class	Power DC	Power AC	Coil Order No.	Coil Ref. No.	Connection	Housing Order No.	Housing Ref. No.	Ambient temp. min.	Ambient temp. max.
1	**22 mm**	IP 65	**Class F**	2.5 W	2 W	DA01	**488980**	for DIN plug	A0	**8993**	-40	50
		IP 65	**Class F**	2.5 W	2 W	DA02	**481045**	with DIN plug	A0	**8993**	-40	50
		IP 65	**Class F**	5 W	4 W	DA03	**481180**	for DIN plug	A0	**8993**	-40	50
		IP 65	**Class F**	5 W	4 W	DA04	**481530**	with DIN plug	A0	**8993**	-40	50
		IP 65	**EEx m II T4**	5 W	4 W	VA01	**482605**	with 1500mm cable	00	**-**	-40	50
		IP 65	**EEx m II T5**	2.5 W	2 W	VA02	**482606**	with 1500mm cable	00	**-**	-40	50
2	**32 mm**	IP 65	**Class F**	9 W	8 W	DZ02	**481865**	for DIN plug	N1	**2995**	-40	50
	(Std)	IP 65		9 W	8 W	DZ03	**482725**	with DIN plug	N1	**2995**	-40	50
		IP 65	**Class H**	9 W	8 W	DZ04	**492453**	for DIN plug	N1	**2995**	-40	50
		IP 65		9 W	8 W	DZ05	**492726**	with DIN plug	N1	**2995**	-40	50
		IP 65	**Class F, 50/60 Hz**	-	9 W	DZ06	**483510**	for DIN plug	N1	**2995**	-40	50
		IP 65		-	9 W	DZ07	**482635**	with DIN plug	N1	**2995**	-40	50
		IP 65	**EEx m II T4**	9 W	8 W	HZ05	**492670**	with 3000mm cable	00	**-**	-40	40
		IP 65	**Class H**	14 W	14 W	DZ08	**492425**	for DIN plug	N1	**2995**	-40	50
		IP 65		14 W	14 W	DZ09	**492727**	with DIN plug	N1	**2995**	-40	50
	50 mm	IP10 / IP 44	**Class F**	8 W	8 W	EZ01	**481000**	screw-terminals	E0	**4270**	-40	50
	(Std)	IP10 / IP 44	**Class H**	8 W	8 W	EZ02	**485100**	screw-terminals	E0	**4270**	-40	50
		IP10 / IP 44	**Class H**	14 W	14 W	EZ92	**486265**	screw-terminals	E0	**4270**	-40	50
		IP 67	**Class F, M20x1.5**	8 W	8 W	EZ01	**481000**	screw-terminals	G1	**4538**	-40	50
		IP 65	**EEx m II T5/T4**	9 W	8 W	VZ01	**492070**	with 1500mm cable	00	**-**	-40	40/65
		IP 67	**EEx me II T4**	8 W	8 W	HZ06	**483371**	for cable connection	00	**-**	-40	65
		IP 66	**EEx me II T3/T4**	11 W	9 W	VZ03	**492190**	for cable connection	00	**-**	-40	75/40
3	**32 mm**	IP 65	**Class H**	-	14 W	DZ08	**492425**	for DIN plug	N1	**2995**	-40	50
4	**50 mm (impulse)**	IP10 / IP 44	**Class F**	-	11 W	MZ01	**484990**	screw-terminals	E1	**4269**	-40	50
		IP10 / IP 44	**Class F**	13 W	-	MZ02	**485400**	screw-terminals	E1	**4269**	-40	50
5	**50 mm**	IP 54	**EEx d IIC T4/T5/T6**	8 W	8 W	HZ08	**483250**	for cable 1/2 NPT	00	**-**	-40	80/75/60
6	**32 mm**	IP 65	**Class F**	1.6 W	-	DZ10	**482740**	for DIN plug	N1	**2995**	-40	50
	(Miniwatt)	IP 65	**Class F**	1.6W	-	DZ11	**482745**	with DIN plug	N1	**2995**	-40	50
	50 mm	IP 67	**EEx me II T5**	2.5 W	-	VZ04	**491117**	for cable connection	00	**-**	-40	65
	(Miniwatt)	IP 67	**EEx m II T5/T4**	2.5 W	2.5 W	VZ05	**492370**	with 1500mm cable	00	**-**	-40	40/65
		IP 66	**EEx me II T6/T5**	2.5 W	2.5 W	VZ06	**492390**	for cable connection	00	**-**	-40	40/75
7	**32 mm**	IP 65	**EEx ia II C T6**	0.4 W	-	DZ12	**483580.01**	for DIN plug	N1	**2995**	-40	55
		IP 65		0.4 W	-	DZ13	**483960.01**	with DIN plug	N1	**2995**	-40	55
	50 mm	IP 66	**EEx ia II C T6**	0.4 W	-	VZ07	**488650.01**	for cable connection	00	**-**	-40	65
		IP 67		0.4 W	-	VZ08	**488660.01**	with 2000mm cable	00	**-**	-40	65
		IP 65		0.4 W	-	VZ09	**488670.01**	with DIN plug	00	**-**	-40	65

Note: This table is indicative only. Please contact your distributor to confirm your selection.

Parker Lucifer SA
Fluid Control Division Europe
CH-1227 Carouge-Genève

Tel: +45 63 12 83 00 | Email: ps@hymatik.com | www.hymatik.com | Hvidkaervej 27a, DK-5250 Odense SV, Denmark

Miniature valves (2-way direct operated) 2/2

ACTUATION	BODY MATERIAL	FUNCTION	CONNECTION	ORIFICE (MM)	MAX. PRESSURE (BAR)	PAGE
Direct operated	**Brass body**	**Normally closed**	1/8	.8 to 4	56.0	38
		Normally open	1/8	.8 to 2.4	21.0	40
	303 Stainless steel body	**Normally closed**	1/8	.8 to 4	56.0	40
		Normally open	1/8	.8 to 2.4	21.0	42
	Aluminium alloy body	**Normally closed**	SB	1.2 to 1.6	35.0	42
		Normally open	SB	1.2 to 2.4	14.0	42

Notes:
Direct operated valves: pressure range from 0 to max pressure.

Parker Lucifer SA
Fluid Control Division Europe
CH-1227 Carouge-Genève

Miniature valves (2-way direct operated)

2/2

Applications

The Miniature Series is a small size and low power consumption valve line. It is available in 2-way (normally closed and normally open) and 3-way (normally closed and normally open) versions. These valves are equipped with integrated molded coils with tab or lead termination.

Direct operated

Port size	Orifice (mm)	Flow factors (L/min)			Admissible differential pressure bar			Fluid temp. °C			Seat disc	Reference numbers				Power consumption (W)		Wt. (g)	Dim ref.
		Liquids		Gases	Min	Max		Gas	Liquid	Oil		Global valve reference	Valve reference	Housing	Coil	DC	AC		
G		kv	Qmax	Qn		DC	AC												

Brass body/Pipe mounting

Normally closed

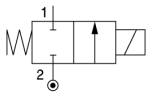

1/8	0.8	0.43	-	-	0	56	56	50	50	50	FKM	3121BBN1AV00	-	**N0**	**M1S1**	4.5	4.5	-	100
	0.8	0.43	-	-	0	56	56	50	50	50	FKM			**N0**	**M3J5**	4.5	4.5	-	
	0.8	0.43	-	-	0	54	54	50	50	50	FKM	3921BBN1AV00	-	**N0**	**M4S1**	2.5	2.5	-	100
	0.8	0.43	-	-	0	54	54	50	50	50	FKM			**N0**	**M6J5**	2.5	2.5	-	
	1.2	0.72	-	-	0	35	35	50	50	50	FKM	3121BBN1EV00	-	**N0**	**M1S1**	4.5	4.5	-	100
	1.2	0.72	-	-	0	35	35	50	50	50	FKM			**N0**	**M3J5**	4.5	4.5	-	
	1.2	0.72	-	-	0	21	21	50	50	50	FKM	3921BBN1EV00	-	**N0**	**M4S1**	2.5	2.5	-	100
	1.2	0.72	-	-	0	21	21	50	50	50	FKM			**N0**	**M6J5**	2.5	2.5	-	
	1.6	1.29	-	-	0	21	21	50	50	50	FKM	3121BBN1GV00	-	**N0**	**M1S1**	4.5	4.5	-	100
	1.6	1.29	-	-	0	21	21	50	50	50	FKM			**N0**	**M3J5**	4.5	4.5	-	
	1.6	1.29	-	-	0	6.6	6.6	50	50	50	FKM	3921BBN1GV00	-	**N0**	**M4S1**	2.5	2.5	-	100
	1.6	1.29	-	-	0	6.6	6.6	50	50	50	FKM			**N0**	**M6J5**	2.5	2.5	-	
	2	1.86	-	-	0	14	14	50	50	50	FKM	3121BBN1JV00	-	**N0**	**M1S1**	4.5	4.5	-	100
	2	1.86	-	-	0	14	14	50	50	50	FKM			**N0**	**M3J5**	4.5	4.5	-	
	2	1.86	-	-	0	4.5	4.5	50	50	50	FKM	3921BBN1JV00	-	**N0**	**M4S1**	2.5	2.5	-	100
	2	1.86	-	-	0	4.5	4.5	50	50	50	FKM			**N0**	**M6J5**	2.5	2.5	-	
	2.4	2.57	-	-	0	12.25	12.25	50	50	50	FKM	3121BBN1LV00	-	**N0**	**M1S1**	4.5	4.5	-	100
	2.4	2.57	-	-	0	12.25	12.25	50	50	50	FKM			**N0**	**M3J5**	4.5	4.5	-	
	2.4	2.57	-	-	0	2.8	2.8	50	50	50	FKM	3921BBN1LV00	-	**N0**	**M4S1**	2.5	2.5	-	100
	2.4	2.57	-	-	0	2.8	2.8	50	50	50	FKM			**N0**	**M6J5**	2.5	2.5	-	
	3.2	3.43	-	-	0	7	7	50	50	50	FKM	3121BBN1NV00	-	**N0**	**M1S1**	4.5	4.5	-	100
	3.2	3.43	-	-	0	7	7	50	50	50	FKM			**N0**	**M3J5**	4.5	4.5	-	
	3.2	3.43	-	-	0	0.28	0.28	50	50	50	FKM	3921BBN1NV00	-	**N0**	**M4S1**	2.5	2.5	-	100
	3.2	3.43	-	-	0	0.28	0.28	50	50	50	FKM			**N0**	**M6J5**	2.5	2.5	-	
	4	4.3	-	-	0	3.5	3.5	50	50	50	FKM	3121BBN1QV00	-	**N0**	**M1S1**	4.5	4.5	-	100
	4	4.3	-	-	0	3.5	3.5	50	50	50	FKM			**N0**	**M3J5**	4.5	4.5	-	

Table continued on page 40

Parker Lucifer SA
Fluid Control Division Europe
CH-1227 Carouge-Genève

Tel: +45 63 12 83 00 | Email: ps@hymatik.com | www.hymatik.com | Hvidkaervej 27a, DK-5250 Odense SV, Denmark

Miniature valves 2/2 - Direct operated

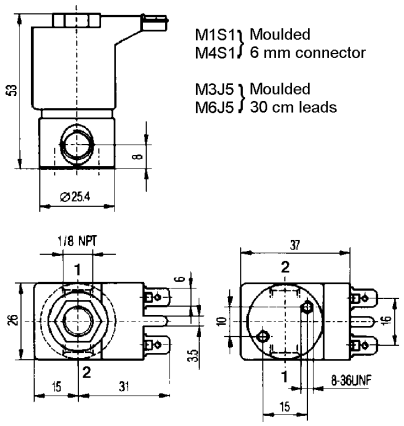



Dimension reference 100

Parker Lucifer SA
Fluid Control Division Europe
CH-1227 Carouge-Genève

Miniature valves 2/2 - Direct operated

Port size	Orifice (mm)	Flow factors (L/min)			Admissible differential pressure bar			Fluid temp. °C			Seat disc	Reference numbers				Power consumption (W)		Wt. (g)	Dim ref.
		Liquids		Gases	Min	Max		Gas	Liquid	Oil		Global valve reference	Valve reference	Housing	Coil	DC	AC		
G		kv	Qmax	Qn		DC	AC												

Brass body/Pipe mounting

Normally open

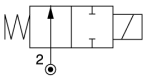

1/8	0.8	0.43	-	-	0	21	21	50	50	50	FKM	3129BBN1AV00	-	**NO**	**M1S1**	4.5	4.5	-	100
	0.8	0.43	-	-	0	21	21	50	50	50	FKM			**NO**	**M3J5**	4.5	4.5	-	
	1.2	0.72	-	-	0	14	14	50	50	50	FKM	3129BBN1EV00	-	**NO**	**M1S1**	4.5	4.5	-	100
	1.2	0.72	-	-	0	14	14	50	50	50	FKM			**NO**	**M3J5**	4.5	4.5	-	
	1.6	1.29	-	-	0	10.5	10.5	50	50	50	FKM	3129BBN1GV00	-	**NO**	**M1S1**	4.5	4.5	-	100
	1.6	1.29	-	-	0	10.5	10.5	50	50	50	FKM			**NO**	**M3J5**	4.5	4.5	-	
	2	1.86	-	-	0	5.6	5.6	50	50	50	FKM	3129BBN1JV00	-	**NO**	**M1S1**	4.5	4.5	-	100
	2	1.86	-	-	0	5.6	5.6	50	50	50	FKM			**NO**	**M3J5**	4.5	4.5	-	
	2.4	2.57	-	-	0	2.8	2.8	50	50	50	FKM	3129BBN1LV00	-	**NO**	**M1S1**	4.5	4.5	-	100
	2.4	2.57	-	-	0	2.8	2.8	50	50	50	FKM			**NO**	**M3J5**	4.5	4.5	-	

303 Stainless steel body/Pipe mounting

Normally closed

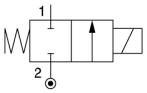

1/8	0.8	0.43	-	-	0	56	56	50	50	50	FKM	3121BSN1AV00	-	**NO**	**M1S1**	4.5	4.5	-	100
	0.8	0.43	-	-	0	56	56	50	50	50	FKM			**NO**	**M3J5**	4.5	4.5	-	
	0.8	0.43	-	-	0	54	54	50	50	50	FKM	3921BSN1AV00	-	**NO**	**M4S1**	2.5	2.5	-	100
	0.8	0.43	-	-	0	54	54	50	50	50	FKM			**NO**	**M6J5**	2.5	2.5	-	
	1.2	0.72	-	-	0	35	35	50	50	50	FKM	3121BSN1EV00	-	**NO**	**M1S1**	4.5	4.5	-	100
	1.2	0.72	-	-	0	35	35	50	50	50	FKM			**NO**	**M3J5**	4.5	4.5	-	
	1.2	0.72	-	-	0	21	21	50	50	50	FKM	3921BSN1EV00	-	**NO**	**M4S1**	2.5	2.5	-	100
	1.2	0.72	-	-	0	21	21	50	50	50	FKM			**NO**	**M6J5**	2.5	2.5	-	
	1.6	1.29	-	-	0	21	21	50	50	50	FKM	3121BSN1GV00	-	**NO**	**M1S1**	4.5	4.5	-	100
	1.6	1.29	-	-	0	21	21	50	50	50	FKM			**NO**	**M3J5**	4.5	4.5	-	
	1.6	1.29	-	-	0	6.6	6.6	50	50	50	FKM	3921BSN1GV00	-	**NO**	**M4S1**	2.5	2.5	-	100
	1.6	1.29	-	-	0	6.6	6.6	50	50	50	FKM			**NO**	**M6J5**	2.5	2.5	-	
	2	1.86	-	-	0	14	14	50	50	50	FKM	3121BSN1JV00	-	**NO**	**M1S1**	4.5	4.5	-	100
	2	1.86	-	-	0	14	14	50	50	50	FKM			**NO**	**M3J5**	4.5	4.5	-	
	2	1.86	-	-	0	4.5	4.5	50	50	50	FKM	3921BSN1JV00	-	**NO**	**M4S1**	2.5	2.5	-	100
	2	1.86	-	-	0	4.5	4.5	50	50	50	FKM			**NO**	**M6J5**	2.5	2.5	-	
	2.4	2.57	-	-	0	12.25	12.25	50	50	50	FKM	3121BSN1LV00	-	**NO**	**M1S1**	4.5	4.5	-	100
	2.4	2.57	-	-	0	12.25	12.25	50	50	50	FKM			**NO**	**M3J5**	4.5	4.5	-	
	2.4	2.57	-	-	0	2.8	2.8	50	50	50	FKM	3921BSN1LV00	-	**NO**	**M4S1**	2.5	2.5	-	100
	2.4	2.57	-	-	0	2.8	2.8	50	50	50	FKM			**NO**	**M6J5**	2.5	2.5	-	
	3.2	3.43	-	-	0	7	7	50	50	50	FKM	3121BSN1NV00	-	**NO**	**M1S1**	4.5	4.5	-	100
	3.2	3.43	-	-	0	7	7	50	50	50	FKM			**NO**	**M3J5**	4.5	4.5	-	
	3.2	3.43	-	-	0	0.28	0.28	50	50	50	FKM	3921BSN1NV00	-	**NO**	**M4S1**	2.5	2.5	-	100
	3.2	3.43	-	-	0	0.28	0.28	50	50	50	FKM			**NO**	**M6J5**	2.5	2.5	-	
	4	4.3	-	-	0	3.5	3.5	50	50	50	FKM	3121BSN1QV00	-	**NO**	**M1S1**	4.5	4.5	-	100
	4	4.3	-	-	0	3.5	3.5	50	50	50	FKM			**NO**	**M3J5**	4.5	4.5	-	

Table continued on page 42

Parker Lucifer SA
Fluid Control Division Europe
CH-1227 Carouge-Genève

Miniature valves 2/2 - Direct operated

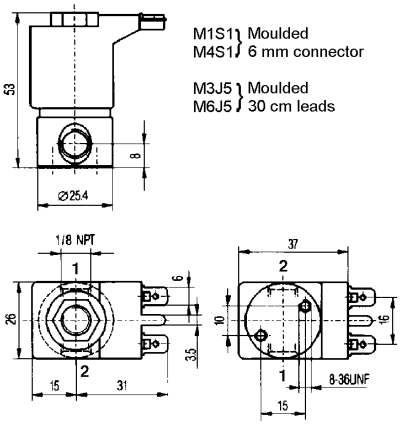



Dimension reference 100

Parker Lucifer SA
Fluid Control Division Europe
CH-1227 Carouge-Genève

Miniature valves 2/2 - Direct operated

Port size G	Orifice (mm)	Flow factors (L/min) Liquids kv	Liquids Qmax	Gases Qn	Admissible differential pressure bar Min	Max DC	Max AC	Fluid temp. °C Gas	Liquid	Oil	Seat disc	Reference numbers Global valve reference	Valve reference	Housing	Coil	Power consumption (W) DC	AC	Wt. (g)	Dim ref.

303 Stainless steel body/Pipe mounting

Normally open

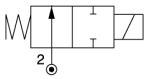

1/8	0.8	0.43	-	-	0	21	21	50	50	50	FKM	3129BSN1AV00	-	**NO**	**M1S1**	4.5	4.5	-	100
	0.8	0.43	-	-	0	21	21	50	50	50	FKM			**NO**	**M3J5**	4.5	4.5	-	
	1.2	0.72	-	-	0	14	14	50	50	50	FKM	3129BSN1EV00	-	**NO**	**M1S1**	4.5	4.5	-	100
	1.2	0.72	-	-	0	14	14	50	50	50	FKM			**NO**	**M3J5**	4.5	4.5	-	
	1.6	1.29	-	-	0	10.5	10.5	50	50	50	FKM	3129BSN1GV00	-	**NO**	**M1S1**	4.5	4.5	-	100
	1.6	1.29	-	-	0	10.5	10.5	50	50	50	FKM			**NO**	**M3J5**	4.5	4.5	-	
	2	1.86	-	-	0	5.6	5.6	50	50	50	FKM	3129BSN1JV00	-	**NO**	**M1S1**	4.5	4.5	-	100
	2	1.86	-	-	0	5.6	5.6	50	50	50	FKM			**NO**	**M3J5**	4.5	4.5	-	
	2.4	2.57	-	-	0	2.8	2.8	50	50	50	FKM	3129BSN1LV00	-	**NO**	**M1S1**	4.5	4.5	-	100
	2.4	2.57	-	-	0	2.8	2.8	50	50	50	FKM			**NO**	**M3J5**	4.5	4.5	-	

Aluminium alloy body/Sub-base mounting

Normally closed

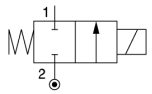

SB	1.2	0.72	-	-	0	35	35	50	50	50	FKM	3121BJA7EVC#	- 1	**NO**	**M1S1**	4.5	4.5	-	101
	1.2	0.72	-	-	0	35	35	50	50	50	FKM		1	**NO**	**M3J5**	4.5	4.5	-	
	1.2	0.72	-	-	0	21	21	50	50	50	FKM	3921BJA7EVC#	- 1	**NO**	**M4S1**	2.5	2.5	-	101
	1.2	0.72	-	-	0	21	21	50	50	50	FKM		1	**NO**	**M6J5**	2.5	2.5	-	
	1.6	1.29	-	-	0	21	21	50	50	50	FKM	3121BJA7GVC#	- 1	**NO**	**M1S1**	4.5	4.5	-	101
	1.6	1.29	-	-	0	21	21	50	50	50	FKM		1	**NO**	**M3J5**	4.5	4.5	-	
	1.6	1.29	-	-	0	6.6	6.6	50	50	50	FKM	3921BJA7GVC#	- 1	**NO**	**M4S1**	2.5	2.5	-	101
	1.6	1.29	-	-	0	6.6	6.6	50	50	50	FKM		1	**NO**	**M6J5**	2.5	2.5	-	

Aluminium alloy body/Sub-base mounting

Normally open

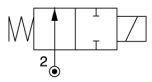

SB	1.2	0.72	-	-	0	14	14	50	50	50	FKM	3129BJA7EVC#	- 1	**NO**	**M1S1**	4.5	4.5	-	101
	1.2	0.72	-	-	0	14	14	50	50	50	FKM		1	**NO**	**M3J5**	4.5	4.5	-	
	1.6	1.29	-	-	0	10.5	10.5	50	50	50	FKM	3129BJA7GVC#	- 1	**NO**	**M1S1**	4.5	4.5	-	101
	1.6	1.29	-	-	0	10.5	10.5	50	50	50	FKM		1	**NO**	**M3J5**	4.5	4.5	-	
	2.4	1.29	-	-	0	2.8	2.8	50	50	50	FKM	3129BJA7LVC#	- 1	**NO**	**M1S1**	4.5	4.5	-	101
	2.4	1.29	-	-	0	2.8	2.8	50	50	50	FKM		1	**NO**	**M3J5**	4.5	4.5	-	

Notes:

1. # Denotes the number of valves in the manifold, from 2 to 4

Parker Lucifer SA
Fluid Control Division Europe
CH-1227 Carouge-Genève

Tel: +45 63 12 83 00 | Email: ps@hymatik.com | www.hymatik.com | Hvidkaervej 27a, DK-5250 Odense SV, Denmark

Miniature valves 2/2 - Direct operated

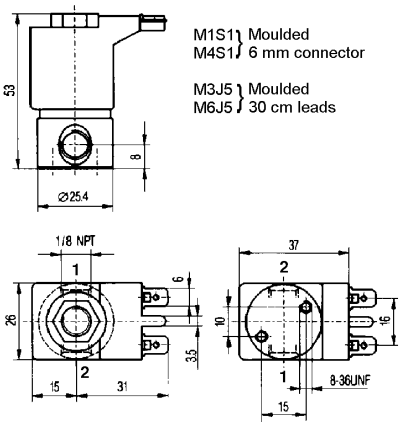



Dimension reference 100

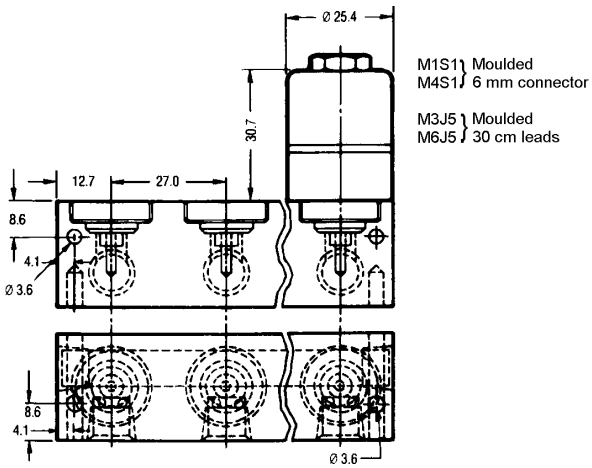

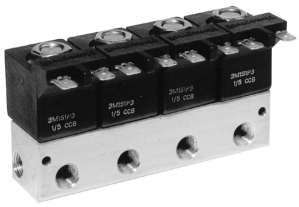

Dimension reference 101

Parker Lucifer SA
Fluid Control Division Europe
CH-1227 Carouge-Genève

Parker Lucifer SA
Fluid Control Division Europe
CH-1227 Carouge-Genève

Valves for water and neutral liquids 2/2

ACTUATION	BODY MATERIAL	FUNCTION	CONNECTION	ORIFICE (MM)	MAX. PRESSURE (BAR)	PAGE
Direct operated	Brass body	Normally closed	1/8	1.5 to 3	20.0	46
			1/4	1.5 to 5	20.0	46
			3/8	4 to 6	10.0	48
			1/2	8.5 to 11	4.0	48
			SB	1.5 to 3	20.0	50
		Normally open	1/4	1.5 to 2.5	20.0	48
		Magnetic latch control	1/4	5	5.0	50
Magnalift	Brass body	Normally closed	3/8	15	16.0	52
			1/2	15	16.0	52
			3/4	15	16.0	52
			1	15 to 25	16.0	52
		Normally open	3/8	15	8.5	54
			1/2	15	8.5	54
			3/4	19	8.5	54
	303 Stainless steel body	Normally closed	3/8	15	7.0	54
			1/2	15	7.0	54
			3/4	19	7.0	54
		Normally open	3/8	16	8.5	54
			1/2	16	8.5	54
Pilot operated	Brass body	Normally closed	1/4	12	10.0	56
			3/8	12 to 13	20.0	56
			1/2	12 to 13	20.0	56
			3/4	18 to 20	20.0	56
			1	18 to 25	20.0	56
			1 1/4	28 to 35	16.0	58
			1 1/2	40	16.0	58
			2	40 to 50	16.0	58
			2 1/2	65	10.0	58
			3	75	10.0	58
			SB	14	40.0	60
		Normally open	3/8	13	20.0	58
			1/2	13	20.0	58
			3/4	20	20.0	58
			1	25	20.0	60
			1 1/4	28 to 35	16.0	60
			1 1/2	40	12.0	60
			2	40 to 50	12.0	60
			SB	14	40.0	60

Notes:
Direct operated and magnalift valves: pressure range from 0 to max pressure.
Pilot operated valves: pressure range from 0.3 to 0.5 bar to max. pressure (refer to tables).

Parker Lucifer SA
Fluid Control Division Europe
CH-1227 Carouge-Genève

Valves for water and neutral liquids

2/2

Applications

Wide range of valves suited to most industrial applications using liquids compatible with the indicated sealing materials. Typical applications can be found in general water supply, dispensing, industrial washing, laundry, heating-ventilation etc.



Direct operated

Port size	Orifice (mm)	Flow factors (L/min)		Admissible differential pressure bar			Fluid temp. °C	Seat disc	Reference numbers				Power consumption (W)		Wt. (g)	El. Part Group *	Dim ref.
				Min	Max						OR						
G		kv	Qmax		DC	AC			Global valve reference	Valve reference no.	Housing	Coil	DC	AC			
Normally closed																	

Brass body/Pipe mounting

1/8	1.5	1.5	6	0	20	20	75	FKM	7121ZBG1GV00	-	**2995**	**481865**	9	8	270	2	7893
	1.5	1.5	6	0	20	20	75	FKM			**4270**	**481000**	8	8	390	2	
	1.5	1.5	6	0	20	20	75	FKM			**2995**	**482730**	7	6	270	2	
	1.5	0.9	2.4	0	12	20	75	FKM	-	**121M14**	**8993**	**481180**	5	4	150	1	1
	1.5	0.9	2.4	0	4	20	75	FKM			**8993**	**488980**	2.5	2	150	1	
	2	2	8	0	7	10	75	FKM	-	**121M13**	**8993**	**481180**	5	4	150	1	1
	2	2	8	0	2.5	10	75	FKM			**8993**	**488980**	2.5	2	150	1	
	2.5	2.8	8.5	0	10	10	75	FKM	7121ZBG1LV00	-	**2995**	**481865**	9	8	270	2	7893
	2.5	2.8	8.5	0	10	10	75	FKM			**4270**	**481000**	8	8	390	2	
	2.5	2.8	8.5	0	5	10	75	FKM			**2995**	**482730**	7	6	270	2	
	3	4.5	9	0	7	10	100	FKM	7121KBG1NVM0	**121K1352** 1	**2995**	**481865**	9	8	300	2	3
	3	4.5	9	0	8	10	120	FKM			**4270**	**481000**	8	8	420	2	
	3	4.5	9	0	10	10	120	FKM			**4270**	**486265**	14	14	430		
1/4	1.5	1.5	6	0	20	20	100	FKM	7121KBG2GV00	**E121K0402**	**2995**	**481865**	9	8	290	2	3
	1.5	1.5	6	0	20	20	120	FKM			**4270**	**481000**	8	8	410	2	
	2.5	3.5	8.5	0	7	14	100	FKM	7121KBG2LV00	**121K0706**	**2995**	**481865**	9	8	290	2	3
	2.5	3.5	8.5	0	9	14	120	FKM			**4270**	**481000**	8	8	410	2	
	2.5	3.5	8.5	0	14	14	120	FKM			**4270**	**486265**	14	14	420		
	2.5	3.5	8.5	0	7	14	100	FKM	7121KBG2LVM0	**121K0756** 1	**2995**	**481865**	9	8	290	2	3
	2.5	3.5	8.5	0	9	14	120	FKM			**4270**	**481000**	8	8	410	2	
	2.5	3.5	8.5	0	14	14	120	FKM			**4270**	**486265**	14	14	420		
	3	4.5	9	0	7	10	100	FKM	7121KBG2NV00	**E121K0302**	**2995**	**481865**	9	8	290	2	3
	3	4.5	9	0	8.5	10	120	FKM			**4270**	**481000**	8	8	410	2	
	3	4.5	9	0	10	10	120	FKM			**4270**	**486265**	14	14	420		
	3	4.5	9	0	7	10	100	FKM	7121KBG2NVM0	**E121K0352** 1	**2995**	**481865**	9	8	290	2	3
	3	4.5	9	0	8.5	10	120	FKM			**4270**	**481000**	8	8	410	2	
	3	4.5	9	0	10	10	120	FKM			**4270**	**486265**	14	14	420		

Table continued on page 48

Notes:

* See Electrical Parts Group table at end of section

1. Manual override standard

Parker Lucifer SA
Fluid Control Division Europe
CH-1227 Carouge-Genève

Tel: +45 63 12 83 00 | Email: ps@hymatik.com | www.hymatik.com | Hvidkaervej 27a, DK-5250 Odense SV, Denmark

Valves for water and neutral liquids 2/2 - Direct operated

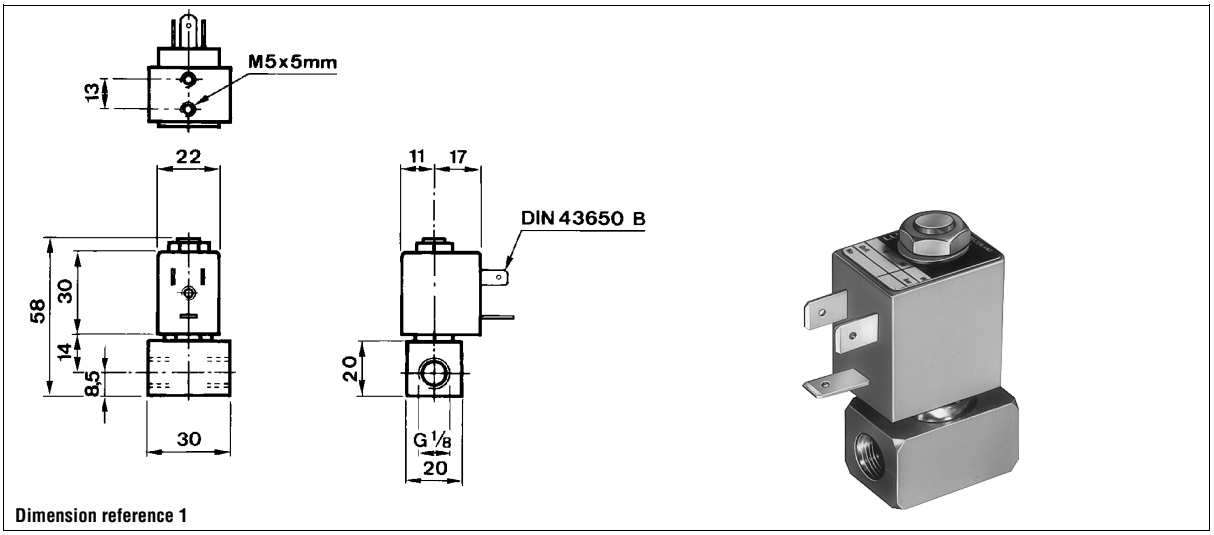

Dimension reference 1

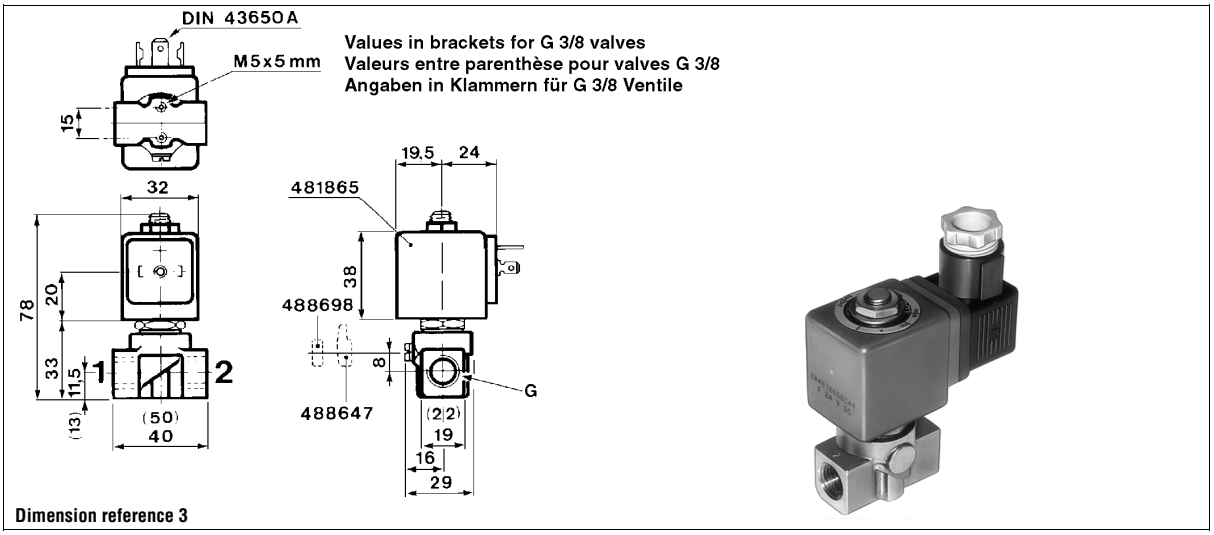

Dimension reference 3

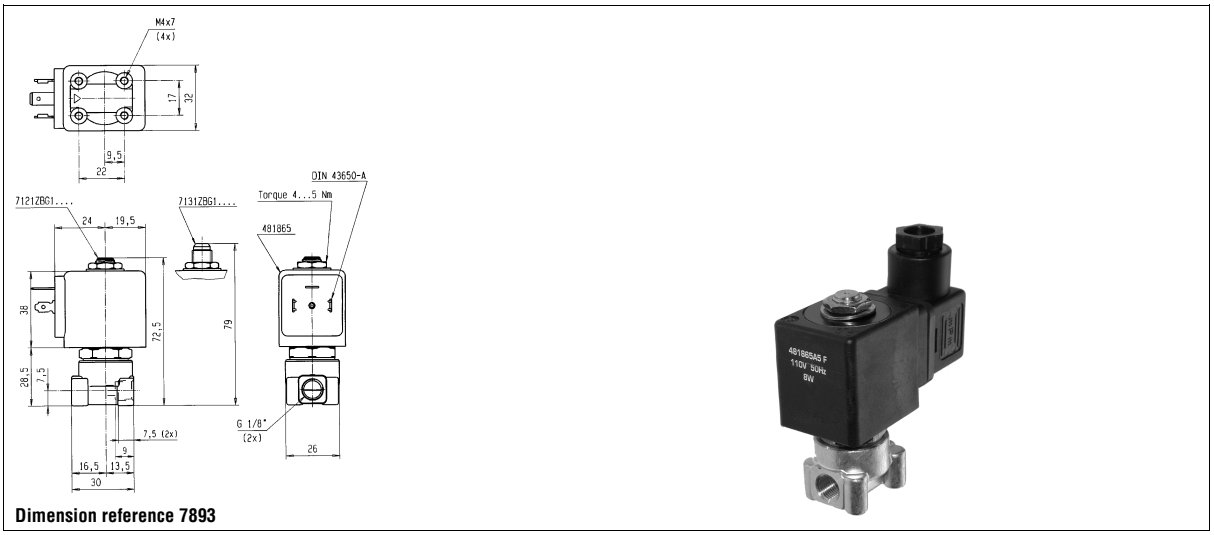

Dimension reference 7893

Parker Lucifer SA
Fluid Control Division Europe
CH-1227 Carouge-Genève

Valves for water and neutral liquids 2/2 - Direct operated

Port size G	Orifice (mm)	Flow factors (L/min) kv	Qmax	Admissible differential pressure bar Min	Max DC	Max AC	Fluid temp. °C	Seat disc	Reference numbers Global valve reference	Valve reference no.	Housing	Coil	Power consumption (W) DC	Power consumption (W) AC	Wt. (g)	El. Part Group *	Dim ref.
Normally closed																	
Brass body/Pipe mounting																	
1/4	4	7.5	10.5	0	4	10	100	FKM	7121KBG2QVM0	**121K0250** 1	**2995**	**481865**	9	8	290	2	3
	4	7.5	10.5	0	5	10	120	FKM			**4270**	**481000**	8	8	410	2	
	4	7.5	10.5	0	10	10	120	FKM			**4270**	**486265**	14	14	420		
	4	7.5	10.5	0	4	10	100	FKM	7121KBG2QV00	**121K02**	**2995**	**481865**	9	8	290	2	3
	4	7.5	10.5	0	5	10	120	FKM			**4270**	**481000**	8	8	410	2	
	4	7.5	10.5	0	10	10	120	FKM			**4270**	**486265**	14	14	420		
	5	11	11.5	0	2	7	100	FKM	7121KBG2SVM0	**121K0150** 1	**2995**	**481865**	9	8	290	2	3
	5	11	11.5	0	2.8	7	120	FKM			**4270**	**481000**	8	8	410	2	
	5	11	11.5	0	5	7	120	FKM			**4270**	**486265**	14	14	420		
	5	11	11.5	0	2	7	100	FKM	7121KBG2SV00	**121K01**	**2995**	**481865**	9	8	290	2	3
	5	11	11.5	0	2.8	7	120	FKM			**4270**	**481000**	8	8	410	2	
	5	11	11.5	0	5	7	120	FKM			**4270**	**486265**	14	14	420		
3/8	4	7.5	10.5	0	4	10	100	FKM	7121KBG3QV00	**121K3206**	**2995**	**481865**	9	8	340	2	3
	4	7.5	10.5	0	5	10	120	FKM			**4270**	**481000**	8	8	460	2	
	4	7.5	10.5	0	10	10	120	FKM			**4270**	**486265**	14	14	470		
	5	11	11.5	0	2	7	100	FKM	7121KBG3SV00	**121K3106**	**2995**	**481865**	9	8	340	2	3
	5	11	11.5	0	2.8	7	120	FKM			**4270**	**481000**	8	8	460	2	
	5	11	11.5	0	5	7	120	FKM			**4270**	**486265**	14	14	470		
	6	12	12.5	0	1.1	5	100	FKM	7121KBG3UV00	**121K3306**	**2995**	**481865**	9	8	340	2	3
	6	12	12.5	0	1.5	5	120	FKM			**4270**	**481000**	8	8	460	2	
	6	12	12.5	0	3	5	120	FKM			**4270**	**486265**	14	14	470	2	
1/2	8.5	25	15	0	0.5	1.1	100	FKM	7121KBG42V00	**E121K46**	**2995**	**481865**	9	8	430	2	7
	8.5	25	15	0	0.5	2.2	120	FKM			**4270**	**481000**	8	8	550	2	
	8.5	25	15	0	1.2	4	120	FKM			**4270**	**486265**	14	14	560		
	11	36	20	0	0.3	0.7	100	FKM	7121KBG44V00	**E121K45**	**2995**	**481865**	9	8	430	2	7
	11	36	20	0	0.35	1.2	120	FKM			**4270**	**481000**	8	8	550	2	
	11	36	20	0	0.7	2.5	120	FKM			**4270**	**486265**	14	14	560		
Normally open																	
Brass body/Pipe mounting																	
1/4	1.5	1.5	6	0	20	20	100	FKM	7122KBG2GV00	**122K8406**	**2995**	**481865**	9	8	290	2	3
	1.5	1.5	6	0	20	20	120	FKM			**4270**	**481000**	8	8	410	2	
	2.5	3	3.5	0	12	12	100	FKM	7122KBG2LV00	**122K8306**	**2995**	**481865**	9	8	290	2	3
	2.5	3	3.5	0	12	12	120	FKM			**4270**	**481000**	8	8	410	2	

Table continued on page 50

Notes:

* See Electrical Parts Group table at end of section

1. Manual override standard

Parker Lucifer SA
Fluid Control Division Europe
CH-1227 Carouge-Genève

Tel: +45 63 12 83 00 | Email: ps@hymatik.com | www.hymatik.com | Hvidkaervej 27a, DK-5250 Odense SV, Denmark

Valves for water and neutral liquids 2/2 - Direct operated

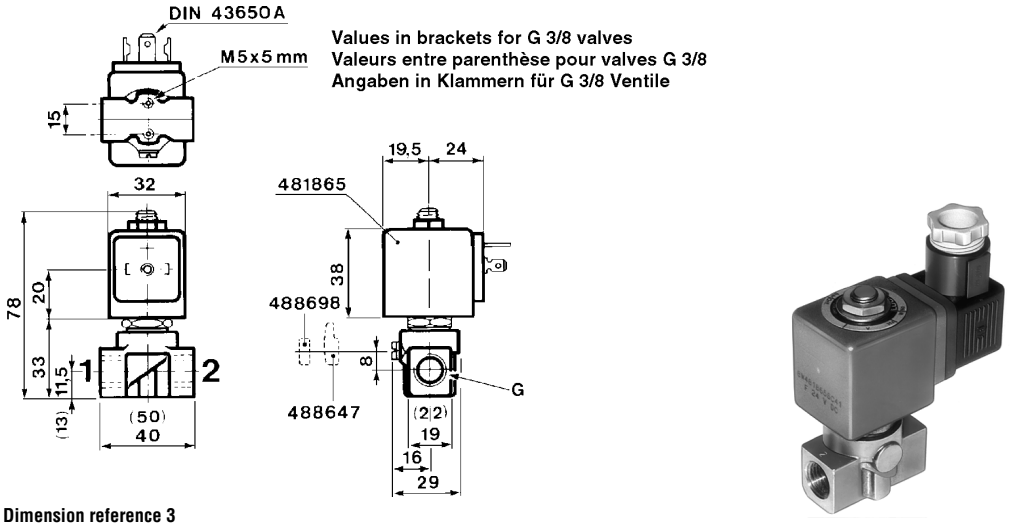

Dimension reference 3

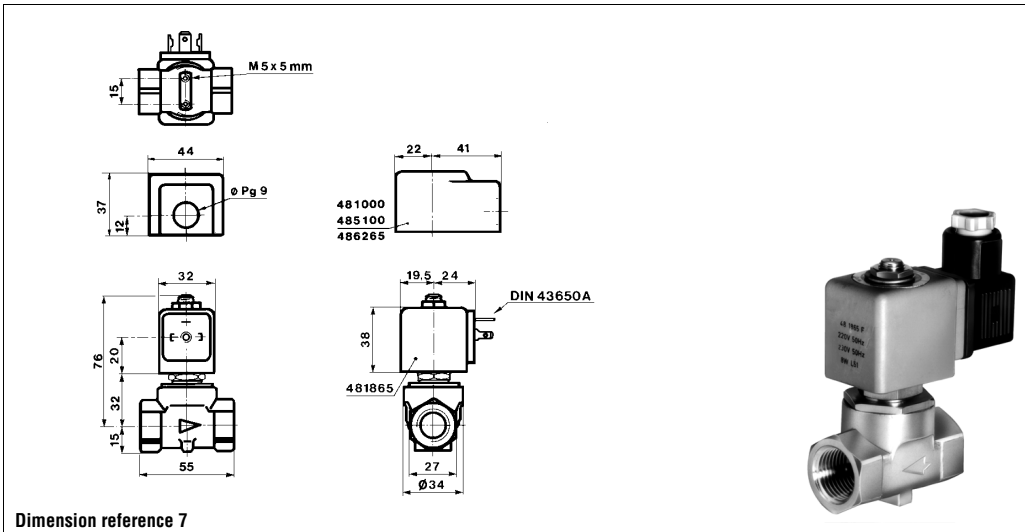

Dimension reference 7

Parker Lucifer SA
Fluid Control Division Europe
CH-1227 Carouge-Genève

Valves for water and neutral liquids 2/2 - Direct operated

Port size G	Orifice (mm)	Flow factors (L/min) kv	Flow factors (L/min) Qmax	Admissible differential pressure bar Min	Admissible differential pressure bar Max DC	Admissible differential pressure bar Max AC	Fluid temp. °C	Seat disc	Reference numbers Global valve reference	Reference numbers Valve reference no.	Reference numbers Housing	Reference numbers OR Coil	Power consumption (W) DC	Power consumption (W) AC	Wt. (g)	El. Part Group *	Dim ref.
Brass body/Pipe mounting																	
												Magnetic latch control					
1/4	5	11	11.5	0	-	5	100	FKM	7125KBG2SV00	**125K01**	**4269**	**484990**	-	11	430	4	3
	5	11	11.5	0	1.5	-	100	FKM			**4269**	**485400**	13	-	430	4	
Brass body/Sub-base mounting												Normally closed					
SB	1.5	1.6	6	0	20	20	100	FKM	7121FBF4GV00	**E121F4406**	**2995**	**481865**	9	8	250		12
	1.5	1.6	6	0	20	20	120	FKM			**4270**	**481000**	8	8	370		
	2.5	3.5	8.5	0	7	14	100	FKM	7121FBF4LV00	**121F4706**	**2995**	**481865**	9	8	250	2	12
	2.5	3.5	8.5	0	9	14	120	FKM			**4270**	**481000**	8	8	370	2	
	2.5	3.5	8.5	0	14	14	120	FKM			**4270**	**486265**	14	14	380	2	
	3	4.5	9	0	7	10	100	FKM	7121FBF4NV00	**E121F4302**	**2995**	**481865**	9	8	250	2	12
	3	4.5	9	0	8.5	10	120	FKM			**4270**	**481000**	8	8	370	2	
	3	4.5	9	0	10	10	120	FKM			**4270**	**486265**	14	14	380	2	

Notes:

* See Electrical Parts Group table at end of section

Parker Lucifer SA
Fluid Control Division Europe
CH-1227 Carouge-Genève

Valves for water and neutral liquids 2/2 - Direct operated

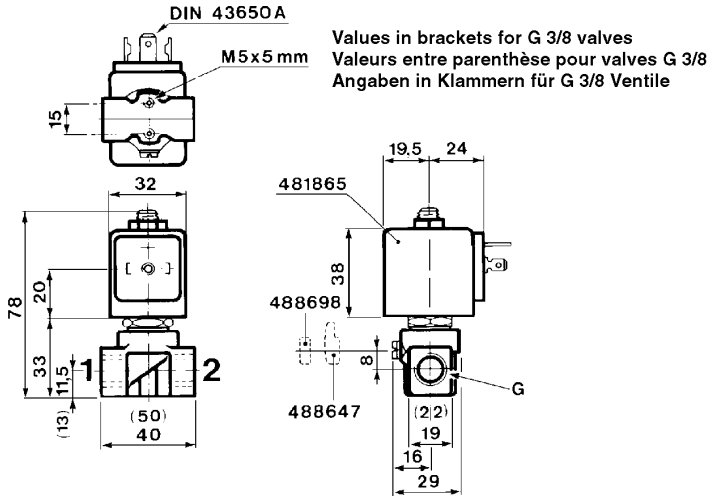



Dimension reference 3

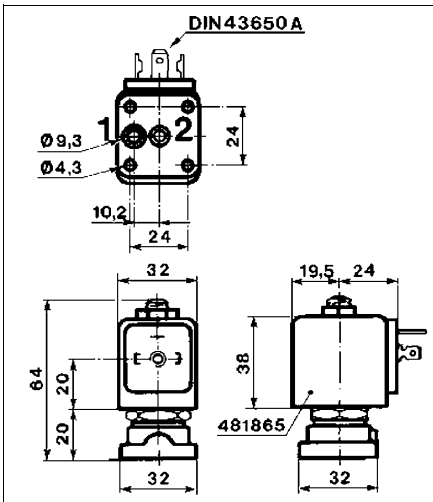

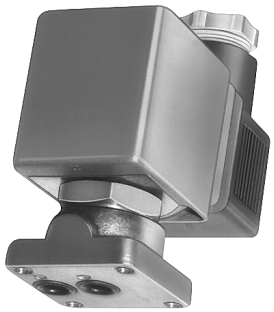

Dimension reference 12

Parker Lucifer SA
Fluid Control Division Europe
CH-1227 Carouge-Genève

Valves for water and neutral liquids

2/2

Applications

Magnalift valves are recommended in applications where the minimum pressure cannot be held at a sufficient level, i.e. where the effective supply pressure may be zero. This concerns applications like filling/emptying tanks by gravity and any other applications with a minimum pressure of zero.



Magnalift

Port size	Orifice (mm)	Flow factors (L/min)		Admissible differential pressure bar			Fluid temp. °C	Seat disc	Reference numbers				Power consumption (W)		Wt. (g)	Dim ref.
				Min	Max							OR				
G		kv	Qmax		DC	AC			Global valve reference	Valve reference no.	Housing	Coil	DC	AC		

Brass body/Pipe mounting

Normally closed

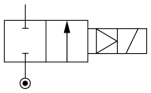

3/8	15	65	65	0	10	-	75	NBR	7221GBG3VNH0	**221G1330**	**2995**	**481865** [1]	9	-	630	10
	15	65	65	0	10	10	65	NBR			-	**492070** [1]	8	8	1000	
	15	65	65	0	10	10	75	NBR			-	**492190** [1]	9	11	1000	
	15	65	65	0	-	16	75	NBR	7221GBG3VN00	**221G13**	**2995**	**481865**	-	8	630	10
	15	65	65	0	-	16	75	NBR			**4270**	**481000**	-	8	750	
	15	65	65	0	7	-	75	NBR			**4270**	**486265**	14	-	760	
1/2	15	65	65	0	10	-	75	NBR	7221GBG4VNH0	**221G1530**	**2995**	**481865** [1]	9	-	640	10
	15	65	65	0	10	10	65	NBR			-	**492070** [1]	8	9	1010	
	15	65	65	0	10	10	75	NBR			-	**492190** [1]	9	11	1010	
	15	65	65	0	-	16	75	NBR	7221GBG4VN00	**221G15**	**2995**	**481865**	-	8	640	10
	15	65	65	0	-	16	75	NBR			**4270**	**481000**	-	8	760	
	15	65	65	0	7	-	75	NBR			**4270**	**486265**	14	-	770	
3/4	15	80	80	0	10	-	75	NBR	7221GBG51NH0	**221G1630**	**2995**	**481865** [1]	9	-	670	10
	15	80	80	0	10	10	65	NBR			-	**492070** [1]	8	8	1040	
	15	80	80	0	10	10	75	NBR			-	**492190** [1]	9	11	1040	
	15	80	80	0	-	16	75	NBR	7221GBG51N00	**221G16**	**2995**	**481865**	-	8	670	10
	15	80	80	0	-	16	75	NBR			**4270**	**481000**	-	8	790	
	15	80	80	0	7	-	75	NBR			**4270**	**486265**	14	-	800	
1	15	80	80	0	10	-	75	NBR	7221GBG61NH0	**221G1730**	**2995**	**481865** [1]	9	-	810	10
	15	80	80	0	10	10	65	NBR			-	**492070** [1]	8	8	1180	
	15	80	80	0	10	10	75	NBR			-	**492190** [1]	9	11	1180	
	15	80	80	0	-	16	75	NBR	7221GBG61N00	**221G17**	**2995**	**481865**	-	8	810	10
	15	80	80	0	-	16	75	NBR			**4270**	**481000**	-	8	930	
	15	80	80	0	7	-	75	NBR			**4270**	**486265**	14	-	940	
	25	170	160	0	10	-	75	NBR	7221GBG64NH0	**221G2130**	**2995**	**481865** [1]	9	-	1170	10
	25	170	160	0	10	10	65	NBR			-	**492070** [1]	8	8	1540	
	25	170	160	0	10	10	75	NBR			-	**492190** [1]	9	11	1540	

Table continued on page 54

Notes:

1. Valves with model number ending by 30 or 31 are mainly equipped with electrical parts EEx me II T3/T4 No. 492190 or EEx m II T4/T5 No. 492070 or with standard DC coils.

Parker Lucifer SA
Fluid Control Division Europe
CH-1227 Carouge-Genève

Tel: +45 63 12 83 00 | Email: ps@hymatik.com | www.hymatik.com | Hvidkaervej 27a, DK-5250 Odense SV, Denmark

Valves for water and neutral liquids 2/2 - Magnalift

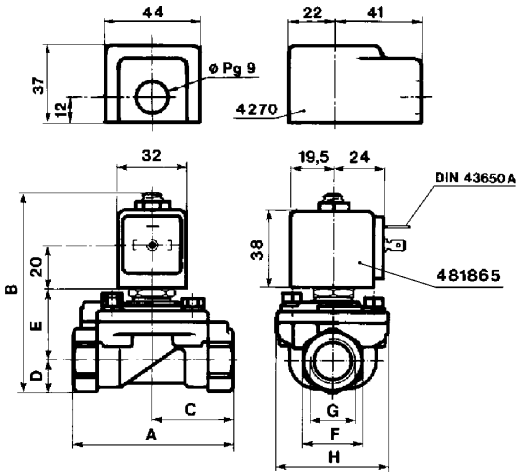

Dimension reference 10

	A mm	B mm	C mm	D mm	E mm	F mm	G inch	H mm
G15/25	75	93	37.5	15	34	27	1/2	53
G13/23	75	93	37.5	15	34	27	3/8	53
G16/26	80	95.5	40	17.5	34	32	3/4	53
G17/27	85	102.5	42.5	22.5	36	41	1	53
G21	100	108	50	23	41	41	1	70



Parker Lucifer SA
Fluid Control Division Europe
CH-1227 Carouge-Genève

Valves for water and neutral liquids 2/2 - Magnalift

Port size	Orifice (mm)	Flow factors (L/min)		Admissible differential pressure bar			Fluid temp. °C	Seat disc	Reference numbers				Power consumption (W)		Wt. (g)	Dim ref.
				Min	Max							OR				
G		kv	Qmax		DC	AC			Global valve reference	Valve reference no.	Housing	Coil	DC	AC		

Brass body/Pipe mounting

Normally closed

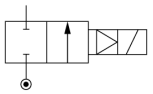

1	25	160	160	0	-	16	75	NBR	7221GBG64N00	**221G21**	**2995**	**481865**	-	8	1170	10
	25	160	160	0	-	16	75	NBR			**4270**	**481000**	-	8	1290	
	25	160	160	0	6	-	75	NBR			**4270**	**486265**	14	-	1300	

Brass body/Pipe mounting

Normally open

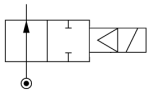

3/8	15	43	43	0	8.5	8.5	85	FKM	72228BG3TV00	**222G3306**	**4270**	**486265**	14	14	940	102
1/2	15	58	58	0	8.5	8.5	85	FKM	72228BG4UV00	**222G3506**	**4270**	**486265**	14	14	940	102
3/4	19	72	72	0	8.5	8.5	85	FKM	72228BG5VV00	**222G3606**	**4270**	**486265**	14	14	940	102

303 Stainless steel body/Pipe mounting

Normally closed

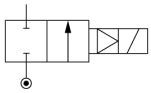

3/8	15	42	42	0	-	7	85	FKM	72218RG3TV00	**221G5306**	**2995**	**481865**	-	8	930	102
	15	42	42	0	-	7	85	FKM			**4270**	**481000**	-	8	1050	
	15	42	42	0	2.8	-	85	FKM			**4270**	**486265**	14	-	1060	
1/2	15	54	54	0	-	7	85	FKM	72218RG4UV00	**221G5506**	**2995**	**481865**	-	8	930	102
	15	54	54	0	-	7	85	FKM			**4270**	**481000**	-	8	1050	
	15	54	54	0	2.8	-	85	FKM			**4270**	**486265**	14	-	1060	
3/4	19	71	71	0	-	7	85	FKM	72218RG5VV00	**221G5606**	**2995**	**481865**	-	8	930	102
	19	71	71	0	-	7	85	FKM			**4270**	**481000**	-	8	1050	
	19	71	71	0	2.8	-	85	FKM			**4270**	**486265**	14	-	1060	

303 Stainless steel body/Pipe mounting

Normally open

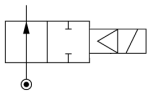

3/8	16	43	43	0	8.5	8.5	85	FKM	72228RG3TV00	**222G5306**	**4270**	**486265**	14	14	-	102
1/2	16	58	58	0	8.5	8.5	85	FKM	72228RG4UV00	**222G5506**	**4270**	**486265**	14	14	1050	102

Parker Lucifer SA
Fluid Control Division Europe
CH-1227 Carouge-Genève

Valves for water and neutral liquids 2/2 - Magnalift

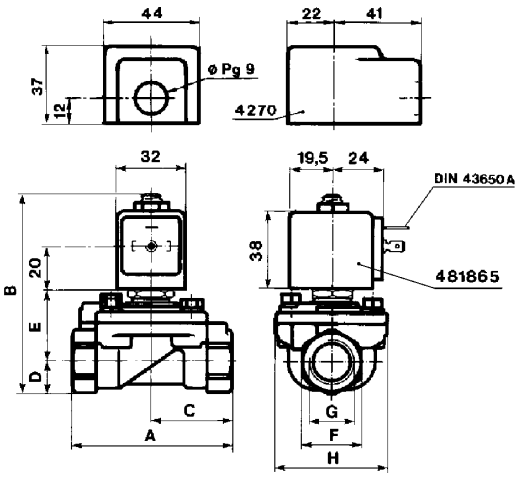

Dimension reference 10

	A mm	B mm	C mm	D mm	E mm	F mm	G inch	H mm
G15/25	75	93	37.5	15	34	27	1/2	53
G13/23	75	93	37.5	15	34	27	3/8	53
G16/26	80	95.5	40	17.5	34	32	3/4	53
G17/27	85	102.5	42.5	22.5	36	41	1	53
G21	100	108	50	23	41	41	1	70



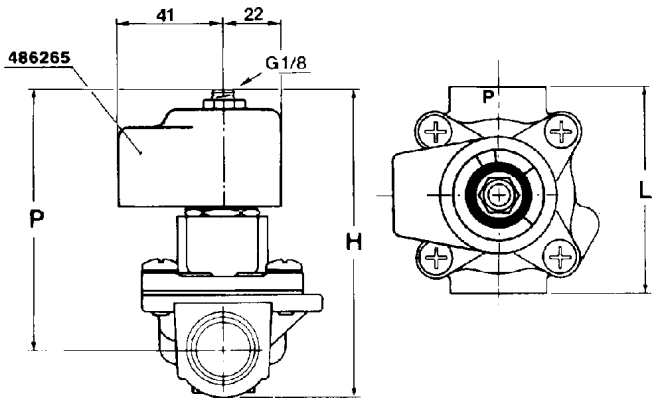

Dimension reference 102

	H mm	P mm	L mm
221G53../222G33..	103	89	67
221G55../222G35..	103	89	67
221G56../222G36..	103	89	69



Parker Lucifer SA
Fluid Control Division Europe
CH-1227 Carouge-Genève

Valves for water and neutral liquids

2/2

Applications

Pilot operated valves are ideally suited to shut-off applications of liquids with high flow and pressure.
A minimum operating pressure is required: refer to tables.



Pilot operated

Port size	Orifice (mm)	Flow factors (L/min)		Admissible differential pressure bar			Fluid temp. °C	Seat disc	Reference numbers				Power consumption (W)		Wt. (g)	El. Part Group *	Dim ref.
				Min	Max							OR					
G		kv	Qmax		DC	AC			Global valve reference	Valve reference no.	Housing	Coil	DC	AC			

Normally closed

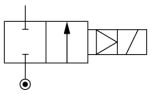

Brass body/Pipe mounting

1/4	12	30	30	0.3	10	10	75	NBR	-	**321K31**	**8993**	**481180**	5	4	380	1	72
	12	30	30	0.3	7	10	75	NBR			**8993**	**488980**	2.5	2	380	1	
3/8	12	45	45	0.3	10	10	75	NBR	-	**321K33**	**8993**	**481180**	5	4	380	1	72
	12	45	45	0.3	7	10	75	NBR			**8993**	**488980**	2.5	2	380	1	
	13	50	50	0.1	20	20	90	NBR	7321BBG3TN00	-	**2995**	**481865**	9	8	560	2	1000
	13	50	50	0.1	20	20	90	NBR			**4270**	**481000**	8	8	560	2	
	13	50	50	0.1	20	20	90	NBR	7321BBG3TNM0	- 1	**2995**	**481865**	9	8	560	2	1000
	13	50	50	0.1	20	20	90	NBR			**4269**	**481000**	8	8	560	2	
1/2	12	50	50	0.3	10	10	75	NBR	-	**321K35**	**8993**	**481180**	5	4	380	1	72
	12	50	50	0.3	7	10	75	NBR			**8993**	**488980**	2.5	2	380	1	
	13	140	140	0.1	20	20	90	NBR	7321BBG4TN00	-	**2995**	**481865**	9	8	590	2	1000
	13	140	140	0.1	20	20	90	NBR			**4269**	**481000**	8	8	590	2	
	13	140	140	0.1	20	20	90	NBR	7321BBG4TNM0	- 1	**2995**	**481865**	9	8	590	2	1000
	13	140	140	0.1	20	20	90	NBR			**4269**	**481000**	8	8	590	2	
3/4	18	100	100	0.3	10	10	75	NBR	-	**321K36**	**8993**	**481180**	5	4	590	1	72
	18	100	100	0.3	7	10	75	NBR			**8993**	**488980**	2.5	2	590	1	
	20	140	140	0.1	20	20	90	NBR	7321BBG53N00	-	**2995**	**481865**	9	8	1050	2	1000
	20	140	140	0.1	20	20	90	NBR			**4269**	**481000**	8	8	1050	2	
	20	140	140	0.1	10	10	90	NBR	7321BBG53NM0	- 2	**2995**	**481865**	9	8	1050	2	1000
	20	140	140	0.1	10	10	90	NBR			**4269**	**481000**	8	8	1050	2	
	20	135	135	0.3	16	16	75	NBR	7321GBG53N00	**E321G36** 3	**2995**	**481865**	9	8	1430	2	11
	20	135	135	0.3	16	16	75	NBR			**4270**	**481000**	8	8	1550	2	
1	18	110	110	0.3	10	10	75	NBR	-	**321K37**	**8993**	**481180**	5	4	735	1	72
	18	110	110	0.3	7	10	75	NBR			**8993**	**488980**	2.5	2	735	1	
	25	160	160	0.1	20	20	90	NBR	7321BBG64N00	-	**2995**	**481865**	9	8	1110	2	1000
	25	160	160	0.1	20	20	90	NBR			**4269**	**481000**	8	8	1110	2	

Table continued on page 58

Notes:

* See Electrical Parts Group table at end of section
1. Manual override standard
2. For manual override and closure speed control change M0 by M1
3. Manual override and 4 position selector for controlled closure rate: see "Anti-waterhammer valves" section

Parker Lucifer SA
Fluid Control Division Europe
CH-1227 Carouge-Genève

Tel: +45 63 12 83 00 | Email: ps@hymatik.com | www.hymatik.com | Hvidkaervej 27a, DK-5250 Odense SV, Denmark

Valves for water and neutral liquids 2/2 - Pilot operated

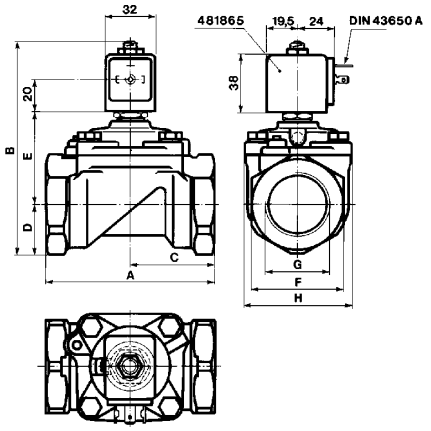

	A mm	B mm	C mm	D mm	E mm	F mm	G inch	H mm
G37	100	121	50	23	54	41	1	70
G36	100	121	50	23	54	41	3/4	70
G38	110	137.5	55	33	60.5	60	1 1/4	99
G39	140	144	75	33	67	60	1 1/2	99
G40	150	158.5	80	41.5	73	75	2	99



Dimension reference 11

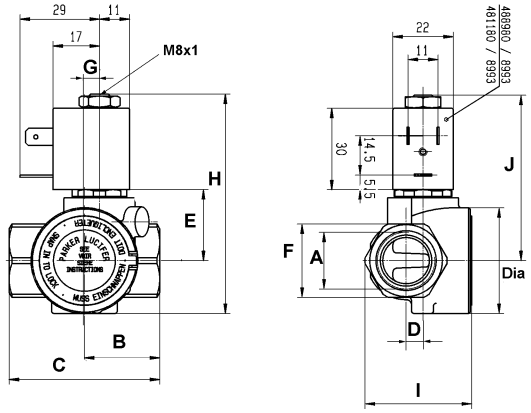

	A inch	B mm	C mm	D mm	E mm	F mm	G mm	H mm	I mm	J mm	Dia. mm
K31	1/4	25	50	6.2	26	27	5.5	81	39	61	40
K33	3/8	25	50	6.2	26	27	5.5	81	39	61	40
K35	1/2	27.5	55	6.2	26	27	5.5	81	39	61	40
K36	3/4	40	80	9	33.5	32	8	96.5	46	68.5	56
K37	1	42.5	85	14.2	33.5	41	8	96.5	56	68.5	56



Dimension reference 72

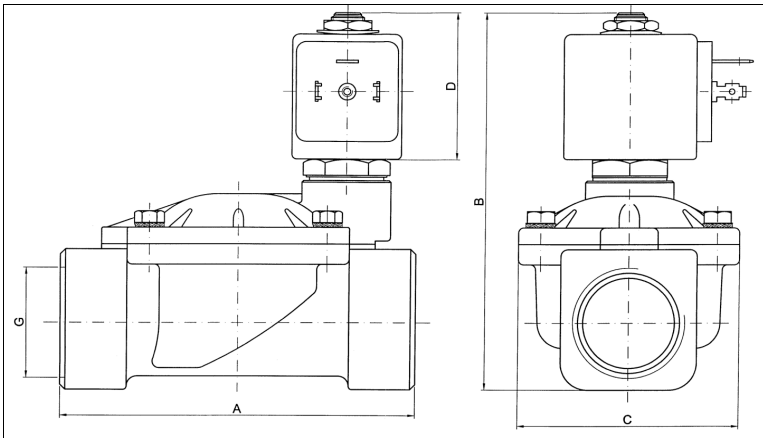

Size

G	A mm	B mm	C mm	D mm
3/8	69	99.5	40	44
1/2	72	101.5	40	44
3/4	100	107	65	44
1	104	112.5	65	44
1 1/4	145	134	102	44
1 1/2	145	134	102	44
2	173	148	118	44
2 1/2	245	195	184	44
3	250	195	184	44

Dimension reference 1000

Parker Lucifer SA
Fluid Control Division Europe
CH-1227 Carouge-Genève

Valves for water and neutral liquids 2/2 - Pilot operated

Port size G	Orifice (mm)	Flow factors (L/min) kv	Qmax	Admissible differential pressure bar Min	Max DC	Max AC	Fluid temp. °C	Seat disc	Reference numbers Global valve reference	Valve reference no.		Housing	Coil	Power consumption (W) DC	AC	Wt. (g)	El. Part Group *	Dim ref.
												OR						

Brass body/Pipe mounting

Normally closed

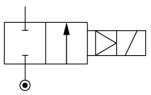

1	25	160	160	0.1	10	10	90	NBR	7321BBG64NM0	-	1	**2995**	**481865**	9	8	1110	2	1000
	25	160	160	0.1	10	10	90	NBR				**4269**	**481000**	9	8	1110	2	
	25	180	180	0.3	16	16	75	NBR	7321GBG64N00	**E321G37**	2	**2995**	**481865**	9	8	1230	2	11
	25	180	180	0.3	16	16	75	NBR				**4270**	**481000**	8	8	1350	2	
1 1/4	28	280	280	0.3	16	16	75	NBR	7321GBG76N00	**E321G38**	2	**2995**	**481865**	9	8	1860	2	11
	28	280	280	0.3	16	16	75	NBR				**4270**	**481000**	8	8	1980	2	
	35	420	420	0.1	10	10	90	NBR	7321BBG78N00	-		**2995**	**481865**	9	8	3120	2	1000
	35	420	420	0.1	10	10	90	NBR				**4269**	**481000**	8	8	3120	2	
	35	420	420	0.1	5	5	90	NBR	7321BBG78NM0	-	1	**2995**	**481865**	9	8	3120	2	1000
	35	420	420	0.1	5	5	90	NBR				**4269**	**481000**	8	8	3120	2	
1 1/2	40	500	500	0.1	10	10	90	NBR	7321BBG88N00	-		**2995**	**481865**	9	8	2870	2	1000
	40	500	500	0.1	10	10	90	NBR				**4269**	**481000**	8	8	2870	2	
	40	500	500	0.1	5	5	90	NBR	7321BBG88NM0	-	1	**2995**	**481865**	9	8	2870	2	1000
	40	500	500	0.1	5	5	90	NBR				**4269**	**481000**	8	8	2870	2	
	40	420	420	0.3	7	16	75	NBR	7321GBG88N00	**E321G39**	2	**2995**	**481865**	9	8	2560	2	11
	40	420	420	0.3	8.5	16	75	NBR				**4270**	**481000**	8	8	2680	2	
	40	420	420	0.3	16	16	75	NBR				**4270**	**486265**	14	14	2700	2	
2	40	500	500	0.1	5	5	90	NBR	7321BBG99NM0	-	1	**2995**	**481865**	9	8	4260	2	1000
	40	500	500	0.1	5	5	90	NBR				**4269**	**481000**	8	8	4260	2	
	40	540	540	0.3	7	16	75	NBR	7321GBG99N00	**E321G40**	2	**2995**	**481865**	9	8	2900	2	11
	40	540	540	0.3	8.5	16	75	NBR				**4270**	**481000**	8	8	3040	2	
	40	540	540	0.3	16	16	75	NBR				**4270**	**486265**	14	14	3050	2	
	50	620	620	0.1	10	10	90	NBR	7321BBG99N00	-		**2995**	**481865**	9	8	4260	2	1000
	50	620	620	0.1	10	10	90	NBR				**4269**	**481000**	8	8	4260	2	
2 1/2	65	1050	1050	0.1	10	10	90	NBR	7321BBGCBNM1	-	3	**2995**	**481865**	9	8	-	2	1000
	65	1050	1050	0.1	10	10	90	NBR				**4269**	**481000**	8	8	-	2	
3	75	1385	1385	0.1	10	10	90	NBR	7321BBGDCNM1	-	3	**2995**	**481865**	9	8	-	2	1000
	75	1385	1385	0.1	10	10	90	NBR				**4269**	**481000**	8	8	-	2	

Brass body/Pipe mounting

Normally open

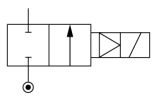

3/8	13	50	50	0.1	20	20	90	NBR	7322BBG3TN00	-		**2995**	**481865**	9	8	560	2	2000
	13	50	50	0.1	20	20	90	NBR				**4270**	**481000**	8	8	560	2	
1/2	13	140	140	0.1	20	20	90	NBR	7322BBG4TN00	-		**2995**	**481865**	9	8	590	2	2000
3/4	20	140	140	0.1	20	20	90	NBR	7322BBG53N00	-		**2995**	**481865**	9	8	1050	2	2000
	20	140	140	0.1	20	20	90	NBR				**4270**	**481000**	8	8	1050	2	
	20	135	135	0.3	16	16	75	NBR	7322GBG53N00	**322G36**		**2995**	**481865**	9	8	1430		11
	20	135	135	0.3	16	16	75	NBR				**4270**	**481000**	8	8	1550		

Table continued on page 60

Notes:

* See Electrical Parts Group table at end of section

1. For manual override and closure speed control change M0 by M1
2. Manual override and 4 position selector for controlled closure rate: see "Anti-waterhammer valves" section
3. Manual override and closure speed control standard

Parker Lucifer SA
Fluid Control Division Europe
CH-1227 Carouge-Genève

Tel: +45 63 12 83 00 | Email: ps@hymatik.com | www.hymatik.com | Hvidkaervej 27a, DK-5250 Odense SV, Denmark

Valves for water and neutral liquids 2/2 - Pilot operated

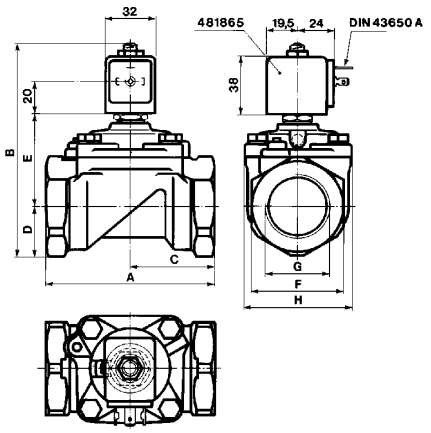

	A mm	B mm	C mm	D mm	E mm	F mm	G inch	H mm
G37	100	121	50	23	54	41	1	70
G36	100	121	50	23	54	41	3/4	70
G38	110	137.5	55	33	60.5	60	1 1/4	99
G39	140	144	75	33	67	60	1 1/2	99
G40	150	158.5	80	41.5	73	75	2	99



Dimension reference 11

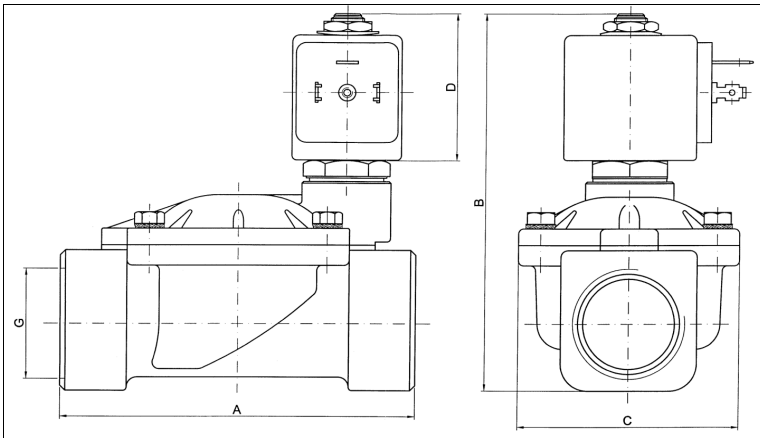

Size

G	A mm	B mm	C mm	D mm
3/8	69	99.5	40	44
1/2	72	101.5	40	44
3/4	100	107	65	44
1	104	112.5	65	44
1 1/4	145	134	102	44
1 1/2	145	134	102	44
2	173	148	118	44
2 1/2	245	195	184	44
3	250	195	184	44

Dimension reference 1000

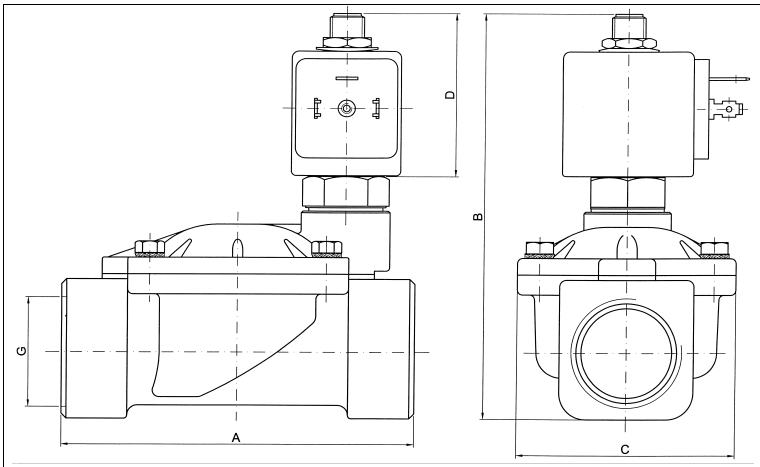

Size

G	A mm	B mm	C mm	D mm
3/8	69	99.5	40	44
1/2	72	101.5	40	44
3/4	100	107	65	44
1	104	112.5	65	44
1 1/4	145	134	102	44
1 1/2	145	134	102	44
2	173	148	118	44
2 1/2	245	195	184	44
3	250	195	184	44

Dimension reference 2000

Parker Lucifer SA
Fluid Control Division Europe
CH-1227 Carouge-Genève

Tel: +45 63 12 83 00 | Email: ps@hymatik.com | www.hymatik.com | Hvidkaervej 27a, DK-5250 Odense SV, Denmark

Valves for water and neutral liquids 2/2 - Pilot operated

Port size G	Orifice (mm)	Flow factors (L/min) kv	Flow factors (L/min) Qmax	Admissible differential pressure bar Min	Admissible differential pressure bar Max DC	Admissible differential pressure bar Max AC	Fluid temp. °C	Seat disc	Reference numbers Global valve reference	Reference numbers Valve reference no.	Reference numbers OR Housing	Reference numbers OR Coil	Power consumption (W) DC	Power consumption (W) AC	Wt. (g)	El. Part Group *	Dim ref.

Brass body/Pipe mounting

Normally open

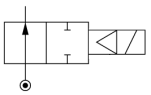

1	25	160	160	0.1	20	20	90	NBR	7322BBG64N00	-	**2995**	**481865**	9	8	1110	2	2000
	25	180	180	0.3	16	16	75	NBR	7322GBG64N00	**322G37**	**2995**	**481865**	9	8	1230		11
	25	180	180	0.3	16	16	75	NBR			**4270**	**481000**	8	8	1350		
1 1/4	28	270	270	0.3	16	16	75	NBR	7322GBG76N00	**322G38**	**2995**	**481865**	9	8	1860		11
	28	270	270	0.3	16	16	75	NBR			**4270**	**481000**	8	8	1980		
	35	420	420	0.1	10	10	90	NBR	7322BBG78N00	-	**2995**	**481865**	9	8	3120	2	2000
	35	420	420	0.1	10	10	90	NBR			**4270**	**481000**	8	8	3120	2	
1 1/2	40	500	500	0.1	10	10	90	NBR	7322BBG88N00	-	**2995**	**481865**	9	8	2870	2	2000
	40	500	500	0.1	10	10	90	NBR			**4270**	**481000**	8	8	2870	2	
	40	420	420	0.3	12	12	75	NBR	7322GBG88N00	**322G39**	**2995**	**481865**	9	8	2560		11
	40	420	420	0.3	12	12	75	NBR			**4270**	**481000**	8	8	2680		
2	40	540	540	0.3	12	12	75	NBR	7322GBG99N00	**322G40**	**2995**	**481865**	9	8	2900		11
	40	540	540	0.3	12	12	75	NBR			**4270**	**481000**	8	8	3040		
	50	620	620	0.1	10	10	90	NBR	7322BBG99N00	-	**2995**	**481865**	9	8	4260	2	2000
	50	620	620	0.1	10	10	90	NBR			**4270**	**481000**	8	8	4260	2	

Brass body/Sub-base mounting

Normally closed

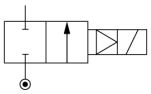

SB	14	45	45	0.3	25	40	75	NBR	7321FBF3TN00	**E321F32** [1]	**2995**	**481865**	9	8	650	2	13
	14	45	45	0.3	30	40	75	NBR			**4270**	**481000**	8	8	770	2	
	14	45	45	0.3	40	40	75	NBR			**4270**	**486265**	14	14	780	2	

Brass body/Sub-base mounting

Normally open

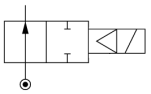

SB	14	45	45	0.3 [2]	40	40	75	NBR	7322FBF3TN00	**322F72** [1]	**2995**	**481865**	9	8	650		13
	14	45	45	0.3 [2]	40	40	75	NBR			**4270**	**481000**	8	8	770		

Notes:

* See Electrical Parts Group table at end of section

1. Pilot seat discs from ruby (synthetic)
2. Minimum pressure differential = 0.3 bar for opening and 0 bar for closing

Parker Lucifer SA
Fluid Control Division Europe
CH-1227 Carouge-Genève

Tel: +45 63 12 83 00 | Email: ps@hymatik.com | www.hymatik.com | Hvidkaervej 27a, DK-5250 Odense SV, Denmark

Valves for water and neutral liquids 2/2 - Pilot operated

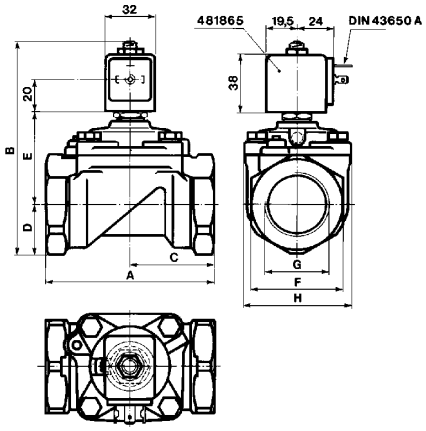

	A mm	B mm	C mm	D mm	E mm	F mm	G inch	H mm
G37	100	121	50	23	54	41	1	70
G36	100	121	50	23	54	41	3/4	70
G38	110	137.5	55	33	60.5	60	1 1/4	99
G39	140	144	75	33	67	60	1 1/2	99
G40	150	158.5	80	41.5	73	75	2	99



Dimension reference 11

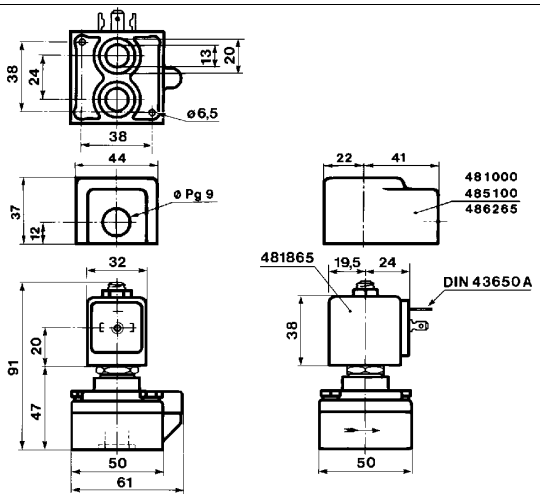



Dimension reference 13

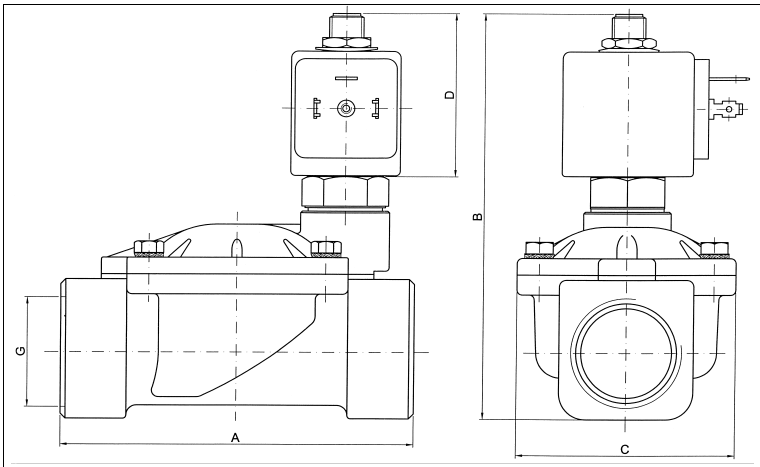

Size

G	A mm	B mm	C mm	D mm
3/8	69	99.5	40	44
1/2	72	101.5	40	44
3/4	100	107	65	44
1	104	112.5	65	44
1 1/4	145	134	102	44
1 1/2	145	134	102	44
2	173	148	118	44
2 1/2	245	195	184	44
3	250	195	184	44

Dimension reference 2000

Parker Lucifer SA
Fluid Control Division Europe
CH-1227 Carouge-Genève

Tel: +45 63 12 83 00 | Email: ps@hymatik.com | www.hymatik.com | Hvidkaervej 27a, DK-5250 Odense SV, Denmark

Electrical parts options with 2/2 valves for water and neutral liquids

El.part Group	Coil	Protection class	Protection class / Temperature class	Power DC	Power AC	Coil Order No.	Coil Ref. No.	Connection	Housing Order No.	Housing Ref. No.	Ambient temp. min.	Ambient temp. max.
1	**22 mm**	IP 65	**Class F**	2.5 W	2 W	DA01	**488980**	for DIN plug	A0	**8993**	-40	50
		IP 65	**Class F**	2.5 W	2 W	DA02	**481045**	with DIN plug	A0	**8993**	-40	50
		IP 65	**Class F**	5 W	4 W	DA03	**481180**	for DIN plug	A0	**8993**	-40	50
		IP 65	**Class F**	5 W	4 W	DA04	**481530**	with DIN plug	A0	**8993**	-40	50
		IP 65	**EEx m II T4**	5 W	4 W	VA01	**482605**	with 1500mm cable	00	**-**	-40	50
		IP 65	**EEx m II T5**	2.5 W	2 W	VA02	**482606**	with 1500mm cable	00	**-**	-40	50
2	**32 mm** (Std)	IP 65	**Class F**	9 W	8 W	DZ02	**481865**	for DIN plug	N1	**2995**	-40	50
		IP 65		9 W	8 W	DZ03	**482725**	with DIN plug	N1	**2995**	-40	50
		IP 65	**Class H**	9 W	8 W	DZ04	**492453**	for DIN plug	N1	**2995**	-40	50
		IP 65			8 W	DZ05	**492726**	with DIN plug	N1	**2995**	-40	50
		IP 65	**Class F, 50/60 Hz**	-	9 W	DZ06	**483510**	for DIN plug	N1	**2995**	-40	50
		IP 65		-	9 W	DZ07	**482635**	with DIN plug	N1	**2995**	-40	50
		IP 65	**EEx m II T4**	9 W	8 W	HZ05	**492670**	with 3000mm cable	00	**-**	-40	40
		IP 65	**Class H**	14 W	14 W	DZ08	**492425**	for DIN plug	N1	**2995**	-40	50
		IP 65		14 W	14 W	DZ09	**492727**	with DIN plug	N1	**2995**	-40	50
	50 mm (Std)	IP10 / IP 44	**Class F**	8 W	8 W	EZ01	**481000**	screw-terminals	E0	**4270**	-40	50
		IP10 / IP 44	**Class H**	8 W	8 W	EZ02	**485100**	screw-terminals	E0	**4270**	-40	50
		IP10 / IP 44	**Class H**	14 W	14 W	EZ92	**486265**	screw-terminals	E0	**4270**	-40	50
		IP 67	**Class F, M20x1.5**	8 W	8 W	EZ01	**481000**	screw-terminals	G1	**4538**	-40	50
		IP 65	**EEx m II T5/T4**	9 W	8 W	VZ01	**492070**	with 1500mm cable	00	**-**	-40	40/65
		IP 67	**EEx me II T4**	8 W	8 W	HZ06	**483371**	for cable connection	00	**-**	-40	65
		IP 66	**EEx me II T3/T4**	11 W	9 W	VZ03	**492190**	for cable connection	00	**-**	-40	75/40
3	**32 mm**	IP 65	**Class H**	-	14 W	DZ08	**492425**	for DIN plug	N1	**2995**	-40	50
4	**50 mm (impulse)**	IP10 / IP 44	**Class F**	-	11 W	MZ01	**484990**	screw-terminals	E1	**4269**	-40	50
		IP10 / IP 44	**Class F**	13 W	-	MZ02	**485400**	screw-terminals	E1	**4269**	-40	50
5	**50 mm**	IP 54	**EEx d IIC T4/T5/T6**	8 W	8 W	HZ08	**483250**	for cable 1/2 NPT	00	**-**	-40	80/75/60
6	**32 mm (Miniwatt)**	IP 65	**Class F**	1.6 W	-	DZ10	**482740**	for DIN plug	N1	**2995**	-40	50
		IP 65	**Class F**	1.6W	-	DZ11	**482745**	with DIN plug	N1	**2995**	-40	50
	50 mm (Miniwatt)	IP 67	**EEx me II T5**	2.5 W	-	VZ04	**491117**	for cable connection	00	**-**	-40	65
		IP 67	**EEx m II T5/T4**	2.5 W	2.5 W	VZ05	**492370**	with 1500mm cable	00	**-**	-40	40/65
		IP 66	**EEx me II T6/T5**	2.5 W	2.5 W	VZ06	**492390**	for cable connection	00	**-**	-40	40/75
7	**32 mm**	IP 65	**EEx ia II C T6**	0.4 W	-	DZ12	**483580.01**	for DIN plug	N1	**2995**	-40	55
		IP 65		0.4 W	-	DZ13	**483960.01**	with DIN plug	N1	**2995**	-40	55
	50 mm	IP 66	**EEx ia II C T6**	0.4 W	-	VZ07	**488650.01**	for cable connection	00	**-**	-40	65
		IP 67		0.4 W	-	VZ08	**488660.01**	with 2000mm cable	00	**-**	-40	65
		IP 65		0.4 W	-	VZ09	**488670.01**	with DIN plug	00	**-**	-40	65

Note: This table is indicative only. Please contact your distributor to confirm your selection.

Parker Lucifer SA
Fluid Control Division Europe
CH-1227 Carouge-Genève

Anti-water hammer valves 2/2

ACTUATION	BODY MATERIAL	FUNCTION	CONNECTION	ORIFICE (MM)	MAX. PRESSURE (BAR)	PAGE
Magnalift	**Brass body**	**Normally closed**	3/8	15	16.0	64
			1/2	15	16.0	64
			3/4	15	16.0	64
			1	15 to 25	16.0	64
Pilot operated	**Brass body**	**Normally closed**	1/4	12	12.0	66
			3/8	12	12.0	66
			1/2	12	12.0	66
			3/4	18 to 20	16.0	66
			1	18 to 25	16.0	66
			1 1/4	28	16.0	68
			1 1/2	40	16.0	68
			2	40	16.0	68
		Normally open	3/4	20	16.0	68
			1	25	16.0	68
			1 1/4	28	16.0	68
			1 1/2	40	12.0	68
			2	40	12.0	68

Notes:
Magnalift valves: pressure range from 0 to max pressure.
Pilot operated valves: pressure range from 0.3 to 0.5 bar to max. pressure (refer to tables).

Parker Lucifer SA
Fluid Control Division Europe
CH-1227 Carouge-Genève

Anti-water hammer valves

2/2

Applications

Magnalift valves are recommended in applications where the minimum pressure cannot be held at a sufficient level, i.e. where the effective supply pressure may be zero. This concerns applications like filling/emptying tanks by gravity and any other applications with a minimum pressure of zero.



Magnalift

Port size	Orifice (mm)	Flow factors (L/min)		Admissible differential pressure bar			Fluid temp. °C	Seat disc	Reference numbers				Power consumption (W)		Wt. (g)	Dim ref.
				Min	Max							OR				
G		kv	Qmax		DC	AC			Global valve reference	Valve reference no.	Housing	Coil	DC	AC		

Brass body/Pipe mounting

Normally closed

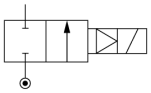

3/8	15	65	65	0	10	-	75	NBR	7221GBG3VNH0	**221G1330**	**2995**	**481865** [1]	9	-	630	10
	15	65	65	0	10	10	65	NBR			-	**492070** [1]	8	8	1000	
	15	65	65	0	10	10	75	NBR			-	**492190** [1]	9	11	1000	
	15	65	65	0	-	16	75	NBR	7221GBG3VN00	**221G13**	**2995**	**481865**	-	8	630	10
	15	65	65	0	-	16	75	NBR			**4270**	**481000**	-	8	750	
	15	65	65	0	7	-	75	NBR			**4270**	**486265**	14	-	760	
1/2	15	65	65	0	10	-	75	NBR	7221GBG4VNH0	**221G1530**	**2995**	**481865** [1]	9	-	640	10
	15	65	65	0	10	10	65	NBR			-	**492070** [1]	8	9	1010	
	15	65	65	0	10	10	75	NBR			-	**492190** [1]	9	11	1010	
	15	65	65	0	-	16	75	NBR	7221GBG4VN00	**221G15**	**2995**	**481865**	-	8	640	10
	15	65	65	0	-	16	75	NBR			**4270**	**481000**	-	8	760	
	15	65	65	0	7	-	75	NBR			**4270**	**486265**	14	-	770	
3/4	15	80	80	0	-	10	75	NBR	7221GBG51NC0	**221G1610** [2]	**2995**	**481865**	-	8	670	10
	15	80	80	0	-	16	75	NBR			**4270**	**481000**	-	8	790	
	15	80	80	0	7	-	75	NBR			**4270**	**486265**	14	-	800	
	15	80	80	0	10	-	75	NBR	7221GBG51NCH	**221G1631** [2]	**2995**	**481865** [1]	9	-	670	10
	15	80	80	0	10	10	65	NBR			-	**492070** [1]	8	8	1040	
	15	80	80	0	10	10	75	NBR			-	**492190** [1]	9	11	1040	
1	15	80	80	0	-	16	75	NBR	7221GBG61NC0	**221G1710** [2]	**2995**	**481865**	-	8	810	10
	15	80	80	0	-	16	75	NBR			**4270**	**481000**	-	8	930	
	15	80	80	0	7	-	75	NBR			**4270**	**486265**	14	-	940	
	15	80	80	0	10	-	75	NBR	7221GBG61NCH	**221G1731** [2]	**2995**	**481865** [1]	9	8	810	10
	15	80	80	0	10	10	65	NBR			-	**492070** [1]	8	8	1180	
	15	80	80	0	10	10	75	NBR			-	**492190** [1]	9	11	1180	
	25	160	160	0	-	16	75	NBR	7221GBG64NC0	**221G2110** [2]	**2995**	**481865**	-	8	1170	10
	25	160	160	0	-	16	75	NBR			**4270**	**481000**	-	8	1290	
	25	160	160	0	6	-	75	NBR			**4270**	**486265**	14	-	1300	
	25	160	160	0	10	-	75	NBR	7221GBG64NCH	**221G2131** [2]	**2995**	**481865** [1]	9	-	1170	10
	25	160	160	0	10	10	65	NBR			-	**492070** [1]	8	8	1540	
	25	160	160	0	10	10	75	NBR			-	**492190** [1]	9	11	1540	

Notes:

1. Valves with model number ending by 30 or 31 are mainly equipped with electrical parts EEx me II T3/T4 No. 492190 or EEx m II T4/T5 No. 492070 or with standard DC coils.
2. 4 position selector for controlled closure rate

Parker Lucifer SA
Fluid Control Division Europe
CH-1227 Carouge-Genève

Tel: +45 63 12 83 00 | Email: ps@hymatik.com | www.hymatik.com | Hvidkaervej 27a, DK-5250 Odense SV, Denmark

Anti-water hammer valves 2/2 - Magnalift

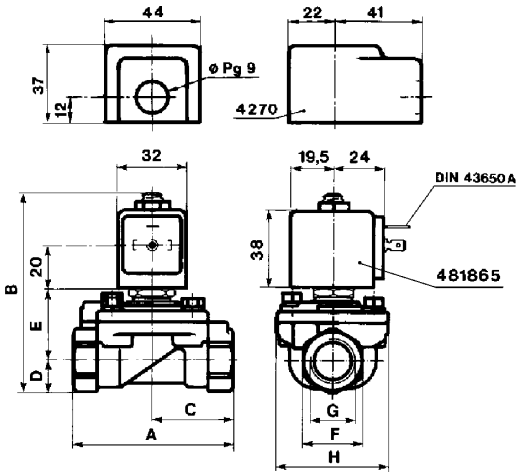

Dimension reference 10

	A mm	B mm	C mm	D mm	E mm	F mm	G inch	H mm
G15/25	75	93	37.5	15	34	27	1/2	53
G13/23	75	93	37.5	15	34	27	3/8	53
G16/26	80	95.5	40	17.5	34	32	3/4	53
G17/27	85	102.5	42.5	22.5	36	41	1	53
G21	100	108	50	23	41	41	1	70



Parker Lucifer SA
Fluid Control Division Europe
CH-1227 Carouge-Genève

Anti-water hammer valves

2/2

Applications

Pilot operated valves are ideally suited to shut-off applications of liquids with high flow and pressure.
A minimum operating pressure is required: refer to tables.



Pilot operated

Port size	Orifice (mm)	Flow factors (L/min)		Admissible differential pressure bar			Fluid temp. °C	Seat disc	Reference numbers			OR	Power consumption (W)		Wt. (g)	El. Part Group *	Dim ref.
				Min	Max												
G		kv	Qmax		DC	AC			Global valve reference	Valve reference no.	Housing	Coil	DC	AC			

Brass body/Pipe mounting

Normally closed

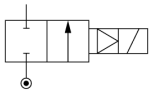

1/4	12	30	30	0.3	12	12	100	FKM	7321KBG2SVW0	**321K4106**	**2995**	**481865**	9	8	490		73
	12	30	30	0.3	12	12	100	FKM			**4270**	**481000**	8	8	610		
	12	30	30	0.3	12	12	100	FKM	7321KBG2SVMW	**321K4156** 1	**2995**	**481865**	9	8	490		73
	12	30	30	0.3	12	12	100	FKM			**4270**	**481000**	8	8	610		
3/8	12	45	45	0.3	12	12	100	FKM	7321KBG3TVW0	**321K4306**	**2995**	**481865**	9	8	490		73
	12	45	45	0.3	12	12	100	FKM			**4270**	**481000**	8	8	610		
	12	45	45	0.3	12	12	100	FKM	7321KBG3TVMW	**321K4356** 1	**2995**	**481865**	9	8	490		73
	12	45	45	0.3	12	12	100	FKM			**4270**	**481000**	8	8	610		
1/2	12	50	50	0.3	12	12	100	FKM	7321KBG4TVW0	**321K4506**	**2995**	**481865**	9	8	490		73
	12	50	50	0.3	12	12	100	FKM			**4270**	**481000**	8	8	610		
	12	50	50	0.3	12	12	100	FKM	7321KBG4TVMW	**321K4556** 1	**2995**	**481865**	9	8	490		73
	12	50	50	0.3	12	12	100	FKM			**4270**	**481000**	8	8	610		
3/4	18	100	100	0.3	12	12	100	FKM	7321KBG51VW0	**321K4606**	**2995**	**481865**	9	8	700		73
	18	100	100	0.3	12	12	100	FKM			**4270**	**481000**	8	8	820		
	18	100	100	0.3	12	12	100	FKM	7321KBG51VMW	**321K4656** 1	**2995**	**481865**	9	8	700		73
	18	100	100	0.3	12	12	100	FKM			**4270**	**481000**	8	8	820		
	20	135	135	0.3	16	16	75	NBR	7321GBG53NMC	**E321G3610** 2	**2995**	**481865**	9	8	1430	2	11
	20	135	135	0.3	16	16	75	NBR			**4270**	**481000**	8	8	1550	2	
1	18	110	110	0.3	12	12	100	FKM	7321KBG62VW0	**321K4706**	**2995**	**481865**	9	8	845		73
	18	110	110	0.3	12	12	100	FKM			**4270**	**481000**	8	8	965		
	18	110	110	0.3	12	12	100	FKM	7321KBG62VMW	**321K4756** 1	**2995**	**481865**	9	8	845		73
	18	110	110	0.3	12	12	100	FKM			**4270**	**481000**	8	8	965		
	25	180	180	0.3	16	16	75	NBR	7321GBG64NMC	**E321G3710** 2	**2995**	**481865**	9	8	1230	2	11
	25	180	180	0.3	16	16	75	NBR			**4270**	**481000**	8	8	1350	2	

Table continued on page 68

Notes:

* See Electrical Parts Group table at end of section
1. Manual override standard
2. Manual override and 4 position selector for controlled closure rate standard - without manual override and 4 position selector on request: same type witout suffix 10, e.g. : E321G36

Parker Lucifer SA
Fluid Control Division Europe
CH-1227 Carouge-Genève

Tel: +45 63 12 83 00 | Email: ps@hymatik.com | www.hymatik.com | Hvidkaervej 27a, DK-5250 Odense SV, Denmark

Anti-water hammer valves 2/2 - Pilot operated

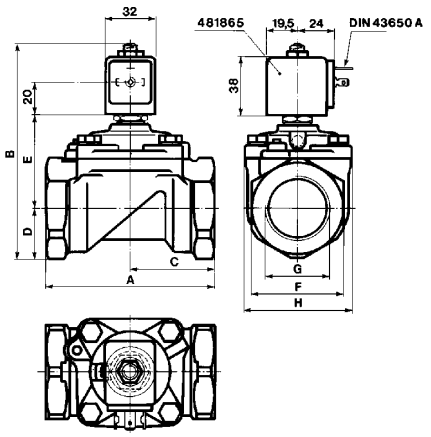

	A mm	B mm	C mm	D mm	E mm	F mm	G inch	H mm
G37	100	121	50	23	54	41	1	70
G36	100	121	50	23	54	41	3/4	70
G38	110	137.5	55	33	60.5	60	1 1/4	99
G39	140	144	75	33	67	60	1 1/2	99
G40	150	158.5	80	41.5	73	75	2	99



Dimension reference 11

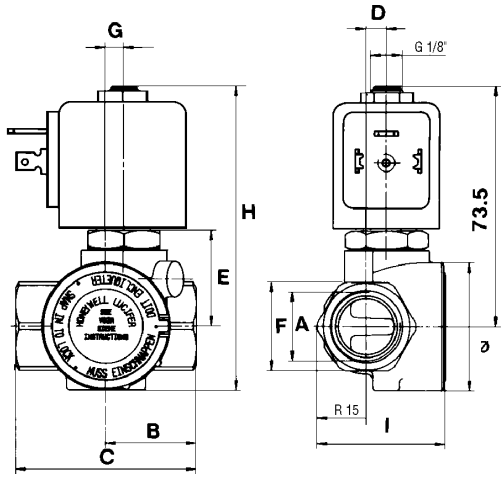

	A inch	B mm	C mm	D mm	E mm	F mm	G mm	H mm	I mm	J mm	Dia. mm
K41	1/4	25	50	6.2	29	27	5.5	93.5	39	73.5	40
K43	3/8	25	50	6.2	29	27	5.5	93.5	39	73.5	40
K45	1/2	27.5	55	6.2	29	27	5.5	93.5	39	73.5	40
K46	3/4	40	80	9	36.5	32	8	109	46	81	56
K47	1	42.5	85	14.2	36.5	41	8	109	56	81	56



Dimension reference 73

Parker Lucifer SA
Fluid Control Division Europe
CH-1227 Carouge-Genève

Tel: +45 63 12 83 00 | Email: ps@hymatik.com | www.hymatik.com | Hvidkaervej 27a, DK-5250 Odense SV, Denmark

Anti-water hammer valves 2/2 - Pilot operated

Port size	Orifice (mm)	Flow factors (L/min)		Admissible differential pressure bar			Fluid temp. °C	Seat disc	Reference numbers				Power consumption (W)		Wt. (g)	El. Part Group *	Dim ref.
				Min	Max							OR					
G		kv	Qmax		DC	AC			Global valve reference	Valve reference no.	Housing	Coil	DC	AC			

Brass body/Pipe mounting

Normally closed

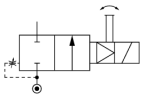

1 1/4	28	280	280	0.3	16	16	75	NBR	7321GBG76NMC	**E321G3810** 1	**2995**	**481865**	9	8	1860	2	11
	28	280	280	0.3	16	16	75	NBR			**4270**	**481000**	8	8	1980	2	
1 1/2	40	420	420	0.3	10	16	75	NBR	7321GBG88NMC	**E321G3910** 1	**2995**	**481865**	9	8	2560	2	11
	40	420	420	0.3	8.5	16	75	NBR			**4270**	**481000**	8	8	2680	2	
	40	420	420	0.3	16	16	75	NBR			**4270**	**486265**	14	14	2700	2	
2	40	540	540	0.3	10	16	75	NBR	7321GBG99NMC	**E321G4010** 1	**2995**	**481865**	9	8	2900	2	11
	40	540	540	0.3	8.5	16	75	NBR			**4270**	**481000**	8	8	3040	2	
	40	540	540	0.3	16	16	75	NBR			**4270**	**486265**	14	14	3050	2	

Brass body/Pipe mounting

Normally open

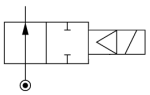

3/4	20	135	135	0.3	16	16	75	NBR	7322GBG53NC0	**322G3610** 2	**2995**	**481865**	9	8	1430		11
	20	135	135	0.3	16	16	75	NBR			**4270**	**481000**	8	8	1550		
1	25	185	185	0.3	16	16	75	NBR	7322GBG64NC0	**322G3710** 2	**2995**	**481865**	9	8	1230		11
	25	185	185	0.3	16	16	75	NBR			**4270**	**481000**	8	8	1350		
1 1/4	28	270	270	0.3	16	16	75	NBR	7322GBG76NC0	**322G3810** 2	**2995**	**481865**	9	8	1860		11
	28	270	270	0.3	16	16	75	NBR			**4270**	**481000**	8	8	1980		
1 1/2	40	425	425	0.3	12	12	75	NBR	7322GBG88NC0	**322G3910** 2	**2995**	**481865**	9	8	2560		11
	40	425	425	0.3	12	12	75	NBR			**4270**	**481000**	8	8	2680		
2	40	540	540	0.3	12	12	75	NBR	7322GBG99NC0	**322G4010** 2	**2995**	**481865**	9	8	2900		11
	40	540	540	0.3	12	12	75	NBR			**4270**	**481000**	8	8	3040		

Notes:

* See Electrical Parts Group table at end of section

1. Manual override and 4 position selector for controlled closure rate standard - without manual override and 4 position selector on request: same type witout suffix 10, e.g. : E321G36

2. 4 position selector for controlled closure rate standard

Parker Lucifer SA
Fluid Control Division Europe
CH-1227 Carouge-Genève

Tel: +45 63 12 83 00 | Email: ps@hymatik.com | www.hymatik.com | Hvidkaervej 27a, DK-5250 Odense SV, Denmark

Anti-water hammer valves 2/2 - Pilot operated

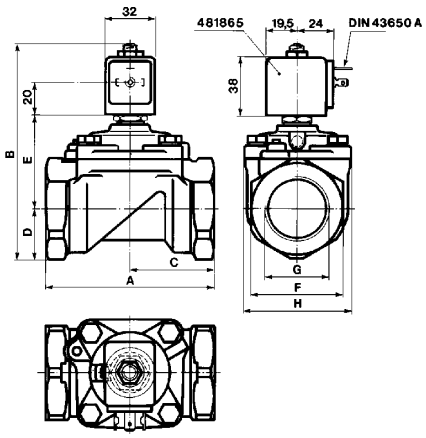

Dimension reference 11

	A mm	B mm	C mm	D mm	E mm	F mm	G inch	H mm
G37	100	121	50	23	54	41	1	70
G36	100	121	50	23	54	41	3/4	70
G38	110	137.5	55	33	60.5	60	1 1/4	99
G39	140	144	75	33	67	60	1 1/2	99
G40	150	158.5	80	41.5	73	75	2	99



Parker Lucifer SA
Fluid Control Division Europe
CH-1227 Carouge-Genève

Electrical parts options with 2/2 anti-waterhammer valves for water and neutral liquids

El.part Group	Coil	Protection class	Protection class / Temperature class	Power DC	Power AC	Coil Order No.	Coil Ref. No.	Connection	Housing Order No.	Housing Ref. No.	Ambient temp. min.	Ambient temp. max.
1	**22 mm**	IP 65	**Class F**	2.5 W	2 W	DA01	**488980**	for DIN plug	A0	**8993**	-40	50
		IP 65	**Class F**	2.5 W	2 W	DA02	**481045**	with DIN plug	A0	**8993**	-40	50
		IP 65	**Class F**	5 W	4 W	DA03	**481180**	for DIN plug	A0	**8993**	-40	50
		IP 65	**Class F**	5 W	4 W	DA04	**481530**	with DIN plug	A0	**8993**	-40	50
		IP 65	**EEx m II T4**	5 W	4 W	VA01	**482605**	with 1500mm cable	00	**-**	-40	50
		IP 65	**EEx m II T5**	2.5 W	2 W	VA02	**482606**	with 1500mm cable	00	**-**	-40	50
2	**32 mm** (Std)	IP 65	**Class F**	9 W	8 W	DZ02	**481865**	for DIN plug	N1	**2995**	-40	50
		IP 65		9 W	8 W	DZ03	**482725**	with DIN plug	N1	**2995**	-40	50
		IP 65	**Class H**	9 W	8 W	DZ04	**492453**	for DIN plug	N1	**2995**	-40	50
		IP 65		9 W	8 W	DZ05	**492726**	with DIN plug	N1	**2995**	-40	50
		IP 65	**Class F, 50/60 Hz**	-	9 W	DZ06	**483510**	for DIN plug	N1	**2995**	-40	50
		IP 65		-	9 W	DZ07	**482635**	with DIN plug	N1	**2995**	-40	50
		IP 65	**EEx m II T4**	9 W	8 W	HZ05	**492670**	with 3000mm cable	00	**-**	-40	40
		IP 65	**Class H**	14 W	14 W	DZ08	**492425**	for DIN plug	N1	**2995**	-40	50
		IP 65		14 W	14 W	DZ09	**492727**	with DIN plug	N1	**2995**	-40	50
	50 mm (Std)	IP10 / IP 44	**Class F**	8 W	8 W	EZ01	**481000**	screw-terminals	E0	**4270**	-40	50
		IP10 / IP 44	**Class H**	8 W	8 W	EZ02	**485100**	screw-terminals	E0	**4270**	-40	50
		IP10 / IP 44	**Class H**	14 W	14 W	EZ92	**486265**	screw-terminals	E0	**4270**	-40	50
		IP 67	**Class F, M20x1.5**	8 W	8 W	EZ01	**481000**	screw-terminals	G1	**4538**	-40	50
		IP 65	**EEx m II T5/T4**	9 W	8 W	VZ01	**492070**	with 1500mm cable	00	**-**	-40	40/65
		IP 67	**EEx me II T4**	8 W	8 W	HZ06	**483371**	for cable connection	00	**-**	-40	65
		IP 66	**EEx me II T3/T4**	11 W	9 W	VZ03	**492190**	for cable connection	00	**-**	-40	75/40
3	**32 mm**	IP 65	**Class H**	-	14 W	DZ08	**492425**	for DIN plug	N1	**2995**	-40	50
4	**50 mm (impulse)**	IP10 / IP 44	**Class F**	-	11 W	MZ01	**484990**	screw-terminals	E1	**4269**	-40	50
		IP10 / IP 44	**Class F**	13 W	-	MZ02	**485400**	screw-terminals	E1	**4269**	-40	50
5	**50 mm**	IP 54	**EEx d IIC T4/T5/T6**	8 W	8 W	HZ08	**483250**	for cable 1/2 NPT	00	**-**	-40	80/75/60
6	**32 mm (Miniwatt)**	IP 65	**Class F**	1.6 W	-	DZ10	**482740**	for DIN plug	N1	**2995**	-40	50
		IP 65	**Class F**	1.6W	-	DZ11	**482745**	with DIN plug	N1	**2995**	-40	50
	50 mm (Miniwatt)	IP 67	**EEx me II T5**	2.5 W	-	VZ04	**491117**	for cable connection	00	**-**	-40	65
		IP 67	**EEx m II T5/T4**	2.5 W	2.5 W	VZ05	**492370**	with 1500mm cable	00	**-**	-40	40/65
		IP 66	**EEx me II T6/T5**	2.5 W	2.5 W	VZ06	**492390**	for cable connection	00	**-**	-40	40/75
7	**32 mm**	IP 65	**EEx ia II C T6**	0.4 W	-	DZ12	**483580.01**	for DIN plug	N1	**2995**	-40	55
		IP 65		0.4 W	-	DZ13	**483960.01**	with DIN plug	N1	**2995**	-40	55
	50 mm	IP 66	**EEx ia II C T6**	0.4 W	-	VZ07	**488650.01**	for cable connection	00	**-**	-40	65
		IP 67		0.4 W	-	VZ08	**488660.01**	with 2000mm cable	00	**-**	-40	65
		IP 65		0.4 W	-	VZ09	**488670.01**	with DIN plug	00	**-**	-40	65

Note: This table is indicative only. Please contact your distributor to confirm your selection.

Parker Lucifer SA
Fluid Control Division Europe
CH-1227 Carouge-Genève

Hot water - steam valves 2/2

ACTUATION	BODY MATERIAL	FUNCTION	CONNECTION	ORIFICE (MM)	MAX. PRESSURE (BAR)	PAGE
Direct operated	Brass body	Normally closed	1/4	3 to 5	10.0	72
			3/8	6	5.0	72
			1/2	8.5 to 11	4.0	72
	303 Stainless steel body		1/4	1.5 to 5	100.0	74
Magnalift	Brass body	Normally closed	3/8	15	10.0	76
			1/2	15	10.0	76
			3/4	15	10.0	76
			1	15 to 25	10.0	76
		Normally open	3/8	15	3.5	78
			1/2	15	3.5	78
			3/4	19	3.5	78
	303 Stainless steel body	Normally closed	3/8	15	7.0	78
			1/2	15	7.0	78
			3/4	15 to 19	7.0	78
		Normally open	3/8	16	8.5	78
			1/2	16	8.5	78
			3/4	19	8.5	78
Pilot operated	Brass body	Normally closed	1/4	12	12.0	80
			3/8	12 to 15	20.0	80
			1/2	12 to 15	12.0	80
			3/4	15 to 20	12.0	80
			1	18 to 27	12.0	80
			1 1/4	29 to 35	8.5	82
			1 1/2	32 to 40	8.5	82
			2	50	4.0	82
		Normally open	3/8	15	8.5	82
			1/2	16	8.5	82
			3/4	15	8.5	82
			1	27	8.5	82
			1 1/4	28	8.5	82
			1 1/2	31	8.5	82

Notes:
Direct operated and magnalift valves: pressure range from 0 to max pressure.
Pilot operated valves: pressure range from 0.3 to 0.5 bar to max. pressure (refer to tables).

Parker Lucifer SA
Fluid Control Division Europe
CH-1227 Carouge-Genève

Hot water - steam valves

2/2

Applications

Hot water and steam valves are important elements in many industrial applications. They serve to control the flow of steam in various heating applications: steam cookers, autoclaves, air conditioning systems, car washing equipment and food processing equipment.
Note: The indicated max. pressures for steam are in bar abs.



Direct operated

Port size	Orifice (mm)	Flow factors (L/min)		Admissible differential pressure bar			Fluid temp. °C		Seat disc	Reference numbers				Power consumption (W)		Wt. (g)	Dim ref.
				Min	Max						OR						
							Water	Steam		Global valve reference	Valve reference no.	Housing	Coil				
G		kv	Qmax		DC	AC								DC	AC		

Brass body/Pipe mounting

Normally closed

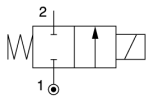

1/4	3	4.5	9	0	7	10	100	-	EPDM	7121KBG2NE00	**121K0323**	**2995**	**481865**	9	8	290	3
	3	4.5	9	0	8.5	10	120	-	EPDM	7121KBG2NE00		**4270**	**481000**	8	8	410	
	3	4.5	9	0	10	10	120	-	EPDM	7121KBG2NE00		**4270**	**486265**	14	14	420	
	3	4.5	9	0	4	4	-	140	EPDM	7121KBG2NES0		**4270**	**486265**	14	14	420	
	3	4.5	9	0	4	4	-	140	EPDM	7121KBG2NES0		**2995**	**492425**	14	14	300	
	5	11	11.5	0	2	7	100	-	EPDM	7121KBG2SE00	**121K0103**	**2995**	**481865**	9	8	290	3
	5	11	11.5	0	2.8	7	120	-	EPDM	7121KBG2SE00		**4270**	**481000**	8	8	410	
	5	11	11.5	0	5	7	120	-	EPDM	7121KBG2SE00		**4270**	**486265**	14	14	420	
	5	11	11.5	0	4	4	-	140	EPDM	7121KBG2SES0		**4270**	**486265**	14	14	420	
	5	11	11.5	0	3.5	4	-	140	EPDM	7121KBG2SES0		**2995**	**492425**	14	14	300	
3/8	6	12	12.5	0	1.1	5	100	-	EPDM	7121KBG3UE00	**121K3303**	**2995**	**481865**	9	8	340	3
	6	12	12.5	0	1.5	5	120	-	EPDM	7121KBG3UE00		**4270**	**481000**	8	8	460	
	6	12	12.5	0	3	5	120	-	EPDM	7121KBG3UE00		**4270**	**486265**	14	14	470	
	6	12	12.5	0	3	4	-	140	EPDM	7121KBG3UES0		**4270**	**486265**	14	14	470	
	6	12	12.5	0	2.5	4	-	140	EPDM	7121KBG3UES0		**2995**	**492425**	14	14	350	
1/2	8.5	25	15	0	0.5	2.2	120	-	EPDM	7121KBG42E00	**E121K4603**	**4270**	**481000**	8	8	550	7
	8.5	25	15	0	1.2	4	120	-	EPDM	7121KBG42E00		**4270**	**486265**	14	14	560	
	8.5	25	15	0	2.2	4	-	140	EPDM	7121KBG42ES0		**4270**	**486265**	14	14	560	
	8.5	25	15	0	2	4	-	140	EPDM	7121KBG42ES0		**2995**	**492425**	14	14	440	
	11	36	20	0	0.35	1.2	120	-	EPDM	7121KBG44E00	**E121K4503**	**4270**	**481000**	8	8	550	7
	11	36	20	0	-	2	-	140	EPDM	7121KBG44ES0		**4270**	**486265**	14	14	560	
	11	36	20	0	0.7	2.5	120	-	EPDM	7121KBG44E00		**4270**	**486265**	14	14	560	
	11	36	20	0	-	2.5	-	140	EPDM	7121KBG44ES0		**2995**	**492425**	14	14	440	

Table continued on page 74

Parker Lucifer SA
Fluid Control Division Europe
CH-1227 Carouge-Genève

Tel: +45 63 12 83 00 | Email: ps@hymatik.com | www.hymatik.com | Hvidkaervej 27a, DK-5250 Odense SV, Denmark

Hot water - steam valves 2/2 - Direct operated

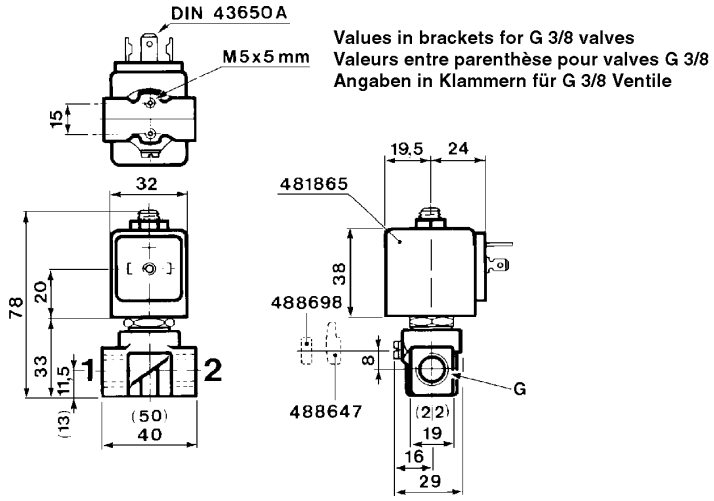



Dimension reference 3

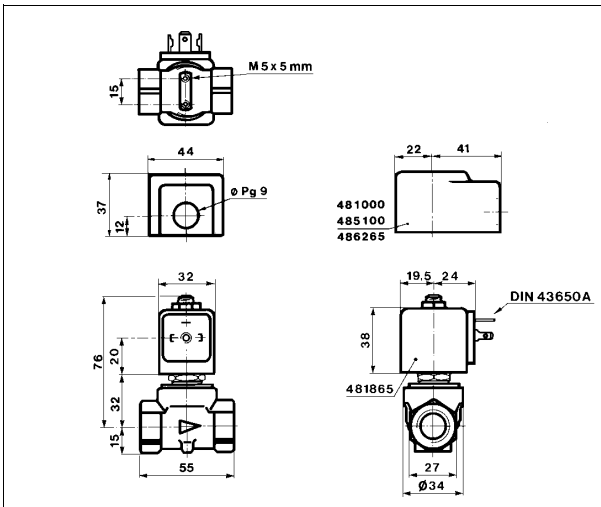



Dimension reference 7

Parker Lucifer SA
Fluid Control Division Europe
CH-1227 Carouge-Genève

Hot water - steam valves 2/2 - Direct operated

303 Stainless steel body/Pipe mounting

Normally closed

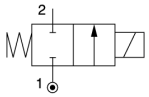

Port size G	Orifice (mm)	Flow factors (L/min) kv	Flow factors (L/min) Qmax	Admissible differential pressure bar Min	Admissible differential pressure bar Max DC	Admissible differential pressure bar Max AC	Fluid temp. °C Water	Fluid temp. °C Steam	Seat disc	Reference numbers Global valve reference	Reference numbers Valve reference no.	Reference numbers Housing	Reference numbers Coil	Power consumption (W) DC	Power consumption (W) AC	Wt. (g)	Dim ref.
1/4	1.5	1.5	15	0	25	60	100	-	Ruby	7121VVG2GR00	**121V5463**	**2995**	**481865**	9	8	410	6
	1.5	1.5	15	0	30	75	130	-	Ruby	7121VVG2GR00		**4270**	**481000**	8	8	530	
	1.5	1.5	15	0	55	100	140	-	Ruby	7121VVG2GR00		**4270**	**486265**	14	14	540	
	1.5	1.5	15	0	30	75	-	180	Ruby	7121VVG2GRS0		**4270**	**486265**	14	14	540	
	1.5	1.5	15	0	25	60	-	180	Ruby	7121VVG2GRS0		**2995**	**492425**	14	14	420	
	2.5	3.5	25	0	10	28	100	-	Ruby	7121VVG2LR00	**121V5763**	**2995**	**481865**	9	8	410	6
	2.5	3.5	25	0	12	34	130	-	Ruby	7121VVG2LR00		**4270**	**481000**	8	8	530	
	2.5	3.5	25	0	12	34	-	180	Ruby	7121VVG2LRS0		**4270**	**486265**	14	14	540	
	2.5	3.5	25	0	22	50	140	-	Ruby	7121VVG2LR00		**4270**	**486265**	14	14	540	
	2.5	3.5	25	0	10	28	-	180	Ruby	7121VVG2LRS0		**2995**	**492425**	14	14	420	
	3	4.5	27	0	7	20	100	-	Ruby	7121VVG2NR00	**121V5363**	**2995**	**481865**	9	8	410	6
	3	4.5	27	0	8.5	25	130	-	Ruby	7121VVG2NR00		**4270**	**481000**	8	8	530	
	3	4.5	27	0	15	36	140	-	Ruby	7121VVG2NR00		**4270**	**486265**	14	14	540	
	3	4.5	27	0	8.5	25	-	180	Ruby	7121VVG2NRS0		**4270**	**486265**	14	14	540	
	3	4.5	27	0	7	20	-	180	Ruby	7121VVG2NRS0		**2995**	**492425**	14	14	420	
	4	7	35	0	4	12	100	-	Ruby	7121VVG2QR00	**121V5263**	**2995**	**481865**	9	8	410	6
	4	7	35	0	5	15	130	-	Ruby	7121VVG2QR00		**4270**	**481000**	8	8	530	
	4	7	35	0	10	22	130	-	Ruby	7121VVG2QR00		**4270**	**486265**	14	14	540	
	4	7	35	0	5	15	-	180	Ruby	7121VVG2QRS0		**4270**	**486265**	14	14	540	
	4	7	35	0	4	12	-	180	Ruby	7121VVG2QRS0		**2995**	**492425**	14	14	420	
	5	10	40	0	2	8.5	100	-	Ruby	7121VVG2SR00	**121V5163**	**2995**	**481865**	9	8	410	6
	5	10	40	0	3.5	10	130	-	Ruby	7121VVG2SR00		**4270**	**481000**	8	8	530	
	5	10	40	0	6.5	14	140	-	Ruby	7121VVG2SR00		**4270**	**486265**	14	14	540	
	5	10	40	0	3.5	10	-	180	Ruby	7121VVG2SRS0		**4270**	**486265**	14	14	540	
	5	10	40	0	2	8.5	-	180	Ruby	7121VVG2SRS0		**2995**	**492425**	14	14	420	

Parker Lucifer SA
Fluid Control Division Europe
CH-1227 Carouge-Genève

Hot water - steam valves 2/2 - Direct operated

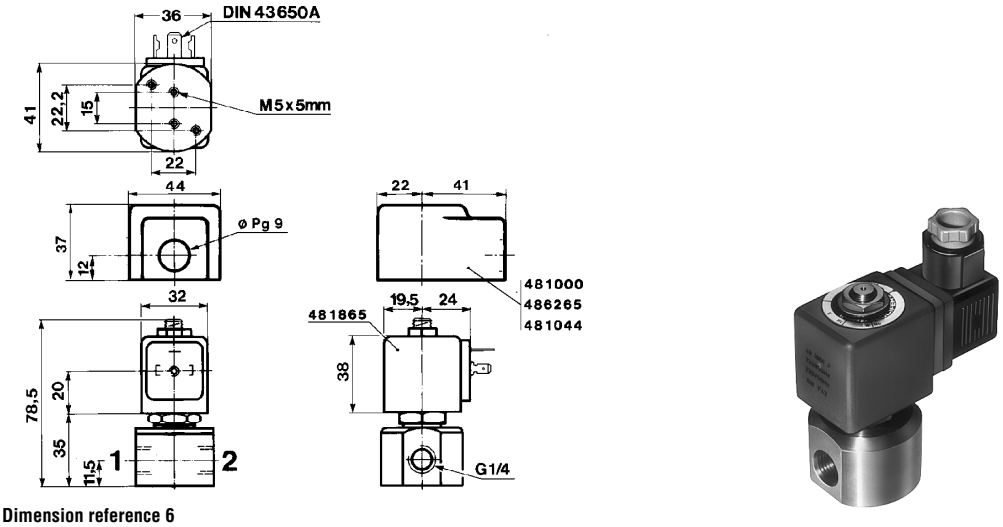

Dimension reference 6

Parker Lucifer SA
Fluid Control Division Europe
CH-1227 Carouge-Genève

Hot water - steam valves

2/2

Applications

Magnalift valves are recommended in applications where the minimum pressure cannot be held at a sufficient level, i.e. where the effective supply pressure may be zero. This concerns applications like filling/emptying tanks by gravity and any other applications with a minimum pressure of zero.
Note: The indicated max. pressures for steam are in bar abs.



Magnalift

Port size	Orifice (mm)	Flow factors (L/min)		Admissible differential pressure bar			Fluid temp. °C		Seat disc	Reference numbers			OR	Power consumption (W)		Wt. (g)	Dim ref.
				Min	Max												
G		kv	Qmax		DC	AC	Water	Steam		Global valve reference	Valve reference no.	Housing	Coil	DC	AC		

Brass body/Pipe mounting

Normally closed

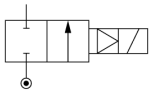

3/8	15	65	65	0	-	10	100	-	EPDM	7221GBG3VE00	**221G1303**	**2995**	**481865**	-	8	630	10
	15	65	65	0	-	10	120	-	EPDM	7221GBG3VE00		**4270**	**481000**	-	8	750	
	15	65	65	0	7	10	120	-	EPDM	7221GBG3VE00		**4270**	**486265**	14	14	760	
	15	65	65	0	4	4	-	140	EPDM	7221GBG3VES0		**4270**	**486265**	14	14	760	
	15	65	65	0	4	4	-	140	EPDM	7221GBG3VES0		**2995**	**492425**	14	14	640	
1/2	15	65	65	0	-	10	100	-	EPDM	7221GBG4VE00	**221G1503**	**2995**	**481865**	-	8	640	10
	15	65	65	0	-	10	120	-	EPDM	7221GBG4VE00		**4270**	**481000**	-	8	760	
	15	65	65	0	7	10	120	-	EPDM	7221GBG4VE00		**4270**	**486265**	14	14	770	
	15	65	65	0	4	4	-	140	EPDM	7221GBG4VES0		**4270**	**486265**	14	14	770	
	15	65	65	0	4	4	-	140	EPDM	7221GBG4VES0		**2995**	**492425**	14	14	650	
3/4	15	80	80	0	-	10	100	-	EPDM	7221GBG51E00	**221G1603**	**2995**	**481865**	-	8	670	10
	15	80	80	0	-	10	120	-	EPDM	7221GBG51E00		**4270**	**481000**	-	8	790	
	15	80	80	0	7	10	120	-	EPDM	7221GBG51E00		**4270**	**486265**	14	14	800	
	15	80	80	0	4	4	-	140	EPDM	7221GBG51ES0		**4270**	**486265**	14	14	800	
	15	80	80	0	4	4	-	140	EPDM	7221GBG51ES0		**2995**	**492425**	14	14	680	
1	15	80	80	0	-	10	100	-	EPDM	7221GBG61E00	**221G1703**	**2995**	**481865**	-	8	810	10
	15	80	80	0	-	10	120	-	EPDM	7221GBG61E00		**4270**	**481000**	-	8	930	
	15	80	80	0	7	10	120	-	EPDM	7221GBG61E0O		**4270**	**486265**	14	14	940	
	15	80	80	0	4	4	-	140	EPDM	7221GBG61ES0		**4270**	**486265**	14	14	940	
	15	80	80	0	4	4	-	140	EPDM	7221GBG61ES0		**2995**	**492425**	14	14	820	
	25	160	160	0	-	10	100	-	EPDM	7221GBG64E00	**221G2103**	**2995**	**481865**	-	8	1170	10
	25	160	160	0	-	10	120	-	EPDM	7221GBG64E00		**4270**	**481000**	-	8	1290	
	25	160	160	0	7	10	120	-	EPDM	7221GBG64E00		**4270**	**486265**	14	14	1300	
	25	160	160	0	4	4	-	140	EPDM	7221GBG64ES0		**4270**	**486265**	14	14	1300	
	25	160	160	0	4	4	-	140	EPDM	7221GBG64ES0		**2995**	**492425**	14	14	1180	

Table continued on page 78

Parker Lucifer SA
Fluid Control Division Europe
CH-1227 Carouge-Genève

Hot water - steam valves 2/2 - Magnalift

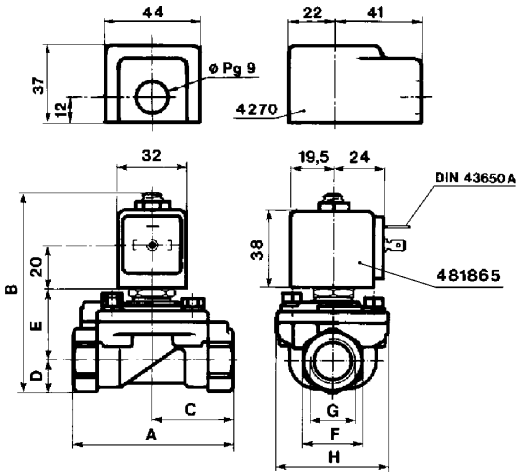

Dimension reference 10

	A mm	B mm	C mm	D mm	E mm	F mm	G inch	H mm
G15/25	75	93	37.5	15	34	27	1/2	53
G13/23	75	93	37.5	15	34	27	3/8	53
G16/26	80	95.5	40	17.5	34	32	3/4	53
G17/27	85	102.5	42.5	22.5	36	41	1	53
G21	100	108	50	23	41	41	1	70



Parker Lucifer SA
Fluid Control Division Europe
CH-1227 Carouge-Genève

Hot water - steam valves 2/2 - Magnalift

Port size G	Orifice (mm)	Flow factors (L/min) kv	Qmax	Admissible differential pressure bar Min	Max DC	Max AC	Fluid temp. °C Water	Steam	Seat disc	Reference numbers Global valve reference	Valve reference no.	OR Housing	Coil	Power consumption (W) DC	AC	Wt. (g)	Dim ref.

Brass body/Pipe mounting

Normally open

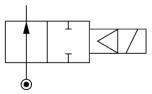

3/8	15	43	43	0	-	3.5	-	145	EPDM	72228BG3TES0	**222G3303**	**4270**	**486265**	-	14	940	102
	15	43	43	0	8.5	8.5	100	-	EPDM	72228BG3TE00		**4270**	**486265**	14	14	940	
1/2	15	58	58	0	-	3.5	-	145	EPDM	72228BG4UES0	**222G3503**	**4270**	**486265**	-	14	940	102
	15	58	58	0	8.5	8.5	100	-	EPDM	72228BG4UE00		**4270**	**486265**	14	14	940	
3/4	19	72	-	0	-	3.5	-	145	EPDM	72228BG5VES0	**222G3603**	**4270**	**486265**	-	14	940	102
	19	72	72	0	8.5	8.5	100	-	EPDM	72228BG5VE00		**4270**	**486265**	14	14	940	

303 Stainless steel body/Pipe mounting

Normally closed

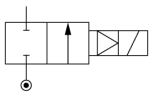

3/8	15	42	-	0	-	7	85	-	EPDM	72218RG3TE00	**221G5303**	**4270**	**481000**	-	8	1050	102
	15	42	-	0	3.8	4	-	145	EPDM	72218RG3TES0		**4270**	**486265**	14	14	1060	
	15	42	-	0	2.8	7	100	-	EPDM	72218RG3TE00		**4270**	**486265**	14	14	1060	
	15	42	-	0	-	4	-	145	EPDM	72218RG3TES0		**2995**	**492425**	-	14	1060	
1/2	15	54	54	0	-	7	85	-	EPDM	72218RG4UE00	**221G5503**	**4270**	**481000**	-	8	1050	102
	15	54	54	0	3.8	4	-	145	EPDM	72218RG4UES0		**4270**	**486265**	-	14	1060	
	15	54	54	0	2.8	7	100	-	EPDM	72218RG4UE00		**4270**	**486265**	14	14	1060	
	15	54	54	0	-	4	-	140	EPDM	72218RG4UES0		**2995**	**492425**	-	14	1060	
3/4	15	71	71	0	2.8	7	100	-	EPDM	72218RG5VE00	**221G5603**	**4270**	**486265**	14	14	1060	102
	19	71	71	0	-	7	85	-	EPDM	72218RG5VE00		**4270**	**481000**	-	8	1050	102
	19	71	71	0	3.8	4	-	145	EPDM	72218RG5VES0		**4270**	**486265**	14	14	1060	
	19	71	71	0	-	4	-	145	EPDM	72218RG5VES0		**2995**	**492425**	-	14	1060	

303 Stainless steel body/Pipe mounting

Normally open

3/8	16	43	43	0	8.5	8.5	100	-	EPDM	72228RG3TE00	**222G5303**	**4270**	**486265**	14	14	1060	102
	16	43	43	0	-	3.5	-	145	EPDM	72228RG3TES0		**4270**	**486265**	-	14	1060	
1/2	16	58	58	0	8.5	8.5	100	-	EPDM	72228RG4UE00	**222G5503**	**4270**	**486265**	14	14	1060	102
	16	58	58	0	-	3.5	-	145	EPDM	72228RG4UES0		**4270**	**486265**	-	14	1060	
3/4	19	72	72	0	8.5	8.5	100	-	EPDM	72228RG5VE00	**222G5603**	**4270**	**486265**	14	14	1060	102
	19	72	72	0	-	3.5	-	145	EPDM	72228RG5VES0		**4270**	**486265**	-	14	1060	

Parker Lucifer SA
Fluid Control Division Europe
CH-1227 Carouge-Genève

Hot water - steam valves 2/2 - Magnalift

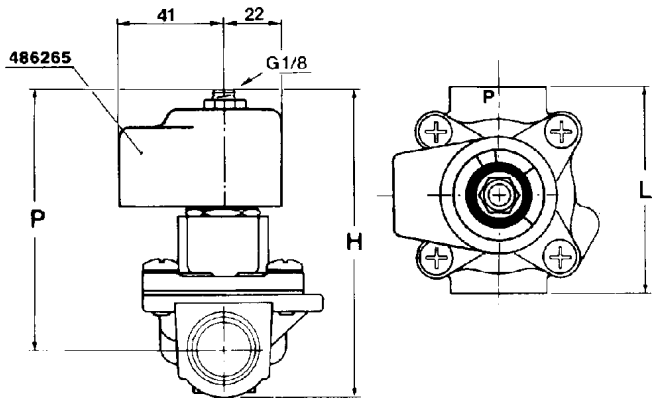

	H mm	P mm	L mm
221G53../222G33..	103	89	67
221G55../222G35..	103	89	67
221G56../222G36..	103	89	69



Dimension reference 102

Parker Lucifer SA
Fluid Control Division Europe
CH-1227 Carouge-Genève

Hot water - steam valves

2/2

Applications

Pilot operated valves are ideally suited to shut-off applications of liquids with high flow and pressure.
A minimum operating pressure is required: refer to tables.
Note: The indicated max. pressures for steam are in bar abs.



Pilot operated

Port size	Orifice (mm)	Flow factors (L/min)		Admissible differential pressure bar			Fluid temp. °C		Seat disc	Reference numbers			OR	Power consumption (W)		Wt. (g)	Dim ref.
				Min	Max		Water	Steam		Global valve reference	Valve reference no.	Housing	Coil	DC	AC		
G		kv	Qmax		DC	AC											

Brass body/Pipe mounting

Normally closed

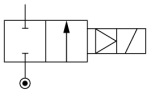

1/4	12	30	30	0.3	12	12	120	-	EPDM	7321KBG2SEW0	**321K4103** [1]	**4270**	**481000**	8	8	610	73
	12	30	30	0.3	12	12	100	-	EPDM	7321KBG2SEW0		**2995**	**482730**	7	6	490	
3/8	12	45	45	0.3	12	12	120	-	EPDM	7321KBG3TEW0	**321K4303** [1]	**4270**	**481000**	8	8	610	73
	12	45	45	0.3	12	12	100	-	EPDM	7321KBG3TEW0		**2995**	**482730**	7	6	490	
	13	50	50	0.1	20	20	140	140	EPDM	7321BBG3TE00	-	**4270**	**486265**	14	14	560	1000
	15	42	42	0.3	-	8.5	-	180	PTFE	73218BG3TTS0	**321G8312**	**4270**	**486265**	-	14	960	97
1/2	12	50	50	0.3	12	12	120	-	EPDM	7321KBG4TEW0	**321K4503** [1]	**4270**	**481000**	8	8	610	73
	12	50	50	0.3	12	12	100	-	EPDM	7321KBG4TEW0		**2995**	**482730**	7	6	490	
	13	140	140	0.1	4	4	140	140	EPDM	7321BBG4TE00	-	**4270**	**486265**	14	14	590	1000
	15	56	56	0.3	-	8.5	-	180	PTFE	73218BG4UTS0	**321G8512**	**4270**	**486265**	-	14	960	97
3/4	15	64	64	0.3	-	8.5	-	180	PTFE	73218BG5VTS0	**321G8612**	**4270**	**486265**	-	14	960	97
	18	100	100	0.3	12	12	120	-	EPDM	7321KBG51EW0	**321K4603** [1]	**4270**	**481000**	8	8	820	73
	18	100	100	0.3	12	12	100	-	EPDM	7321KBG51EW0		**2995**	**482730**	7	6	700	
	20	140	140	0.1	4	4	140	140	EPDM	7321BBG53E00	-	**4270**	**486265**	14	14	1050	1000
1	18	110	110	0.3	12	12	120	-	EPDM	7321KBG62EW0	**321K4703** [1]	**4270**	**481000**	8	8	965	73
	18	110	110	0.3	12	12	100	-	EPDM	7321KBG62EW0		**2995**	**482730**	7	6	845	
	25	160	160	0.1	4	4	140	140	EPDM	7321BBG64E00	-	**4270**	**486265**	14	14	1110	1000

Table continued on page 82

Notes:

1. Anti-waterhammer valve

Parker Lucifer SA
Fluid Control Division Europe
CH-1227 Carouge-Genève

Tel: +45 63 12 83 00 | Email: ps@hymatik.com | www.hymatik.com | Hvidkaervej 27a, DK-5250 Odense SV, Denmark

Hot water - steam valves 2/2 - Pilot operated

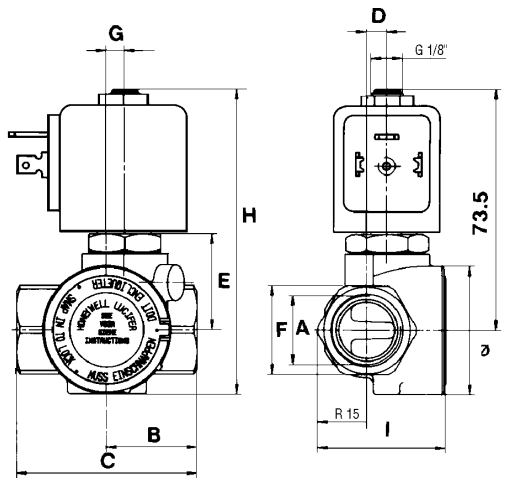

	A inch	B mm	C mm	D mm	E mm	F mm	G mm	H mm	I mm	J mm	Dia. mm
K41	1/4	25	50	6.2	29	27	5.5	93.5	39	73.5	40
K43	3/8	25	50	6.2	29	27	5.5	93.5	39	73.5	40
K45	1/2	27.5	55	6.2	29	27	5.5	93.5	39	73.5	40
K46	3/4	40	80	9	36.5	32	8	109	46	81	56
K47	1	42.5	85	14.2	36.5	41	8	109	56	81	56



Dimension reference 73

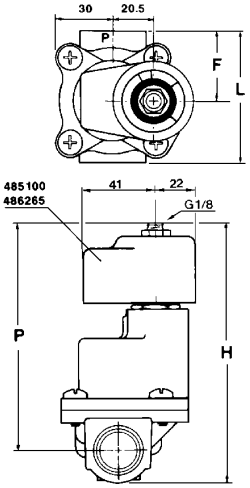

	H mm	P mm	L mm	F mm
321G8312	130	117	68	36
321G8512	130	117	68	36
321G8612	135	119	70	37
322G8312	136	123	68	36
322G8512	136	123	68	36
322G8612	142	125	70	37



Dimension reference 97

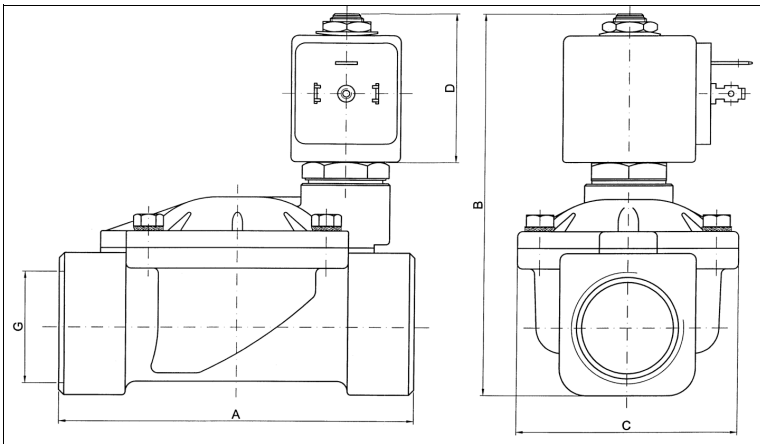

Size

G	A mm	B mm	C mm	D mm
3/8	69	99.5	40	44
1/2	72	101.5	40	44
3/4	100	107	65	44
1	104	112.5	65	44
1 1/4	145	134	102	44
1 1/2	145	134	102	44
2	173	148	118	44
2 1/2	245	195	184	44
3	250	195	184	44

Dimension reference 1000

Parker Lucifer SA
Fluid Control Division Europe
CH-1227 Carouge-Genève

Hot water - steam valves 2/2 - Pilot operated

Port size	Orifice (mm)	Flow factors (L/min)		Admissible differential pressure bar			Fluid temp. °C		Seat disc	Reference numbers			OR	Power consumption (W)		Wt. (g)	Dim ref.
				Min	Max												
G		kv	Qmax		DC	AC	Water	Steam		Global valve reference	Valve reference no.	Housing	Coil	DC	AC		

Brass body/Pipe mounting

Normally closed

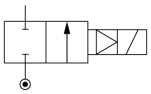

1	27	195	195	0.35	-	8.5	-	180	PTFE	73218BG64TS0	**321G8712**	**4270**	**486265**	-	14	4240	98
1 1/4	29	230	230	0.35	-	8.5	-	180	PTFE	73218BG75TS0	**321G8812**	**4270**	**486265**	-	14	4240	98
	35	420	420	0.1	4	4	140	140	EPDM	7321BBG78E00	-	**4270**	**486265**	14	14	3120	1000
1 1/2	32	320	320	0.35	-	8.5	-	180	PTFE	73218BG87TS0	**321G8912**	**4270**	**486265**	-	14	4240	98
	40	500	500	0.1	4	4	140	140	EPDM	7321BBG88E00	-	**4270**	**486265**	14	14	2870	1000
2	50	620	620	0.1	4	4	140	140	EPDM	7321BBG99E00		**4270**	**486265**	14	14	4260	1000

Brass body/Pipe mounting

Normally open

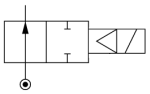

3/8	15	42	42	0.35	-	8.5	-	180	PTFE	73228BG3TTS0	**322G8312**	**4270**	**486265**	-	14	960	97
1/2	16	56	56	0.35	-	8.5	-	180	PTFE	73228BG4UTS0	**322G8512**	**4270**	**486265**	-	14	960	97
3/4	15	64	64	0.35	-	8.5	-	180	PTFE	73228BG52TS0	**322G8612**	**4270**	**486265**	-	14	960	97
1	27	195	195	0.35	-	8.5	-	180	PTFE	73228BG64TS0	**322G8712**	**4270**	**486265**	-	14	4240	98
1 1/4	28	230	230	0.35	-	8.5	-	180	PTFE	73228BG75TS0	**322G8812**	**4270**	**486265**	-	14	4240	98
1 1/2	31	320	320	0.35	-	8.5	-	180	PTFE	73228BG87TS0	**322G8912**	**4270**	**486265**	-	14	4240	98

Parker Lucifer SA
Fluid Control Division Europe
CH-1227 Carouge-Genève

Tel: +45 63 12 83 00 | Email: ps@hymatik.com | www.hymatik.com | Hvidkaervej 27a, DK-5250 Odense SV, Denmark

Hot water - steam valves 2/2 - Pilot operated

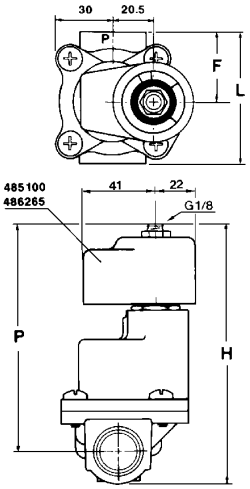

	H mm	P mm	L mm	F mm
321G8312	130	117	68	36
321G8512	130	117	68	36
321G8612	135	119	70	37
322G8312	136	123	68	36
322G8512	136	123	68	36
322G8612	142	125	70	37



Dimension reference 97

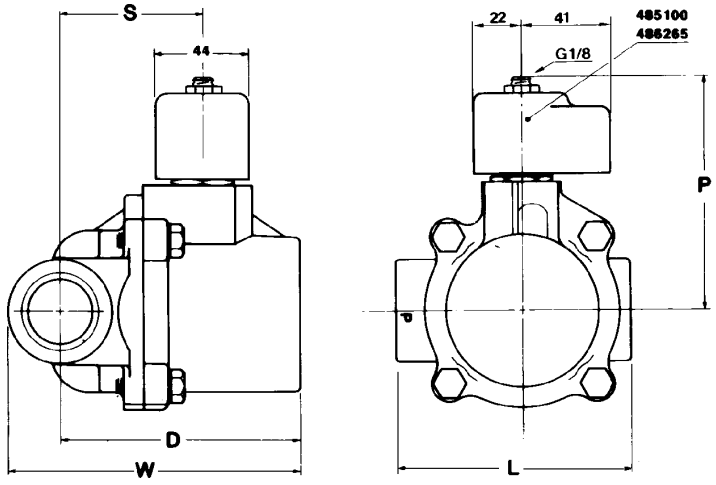

	W mm	D mm	S mm	P mm	L mm
321G8712	116	94	61	101	98
321G8812	124	98	64	101	98
321G8912	138	109	78	104	114
322G8712	116	94	61	107	98
322G8812	124	98	64	107	98
322G8912	138	109	78	110	114



Dimension reference 98

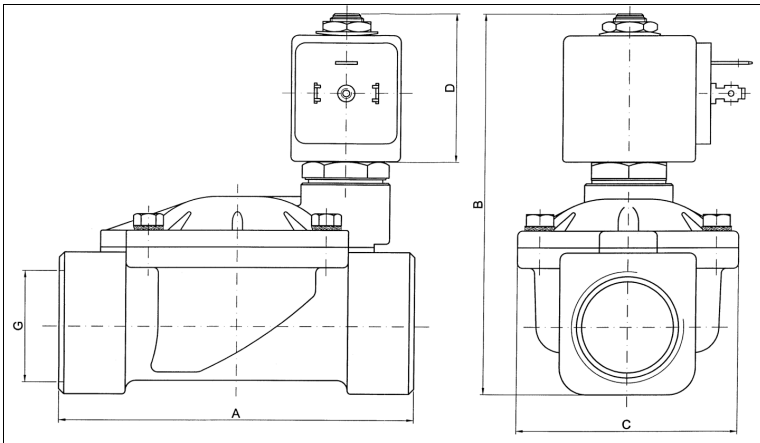

Size

G	A mm	B mm	C mm	D mm
3/8	69	99.5	40	44
1/2	72	101.5	40	44
3/4	100	107	65	44
1	104	112.5	65	44
1 1/4	145	134	102	44
1 1/2	145	134	102	44
2	173	148	118	44
2 1/2	245	195	184	44
3	250	195	184	44

Dimension reference 1000

Parker Lucifer SA
Fluid Control Division Europe
CH-1227 Carouge-Genève

Parker Lucifer SA
Fluid Control Division Europe
CH-1227 Carouge-Genève

Valves for oil (hydraulic) and neutral liquids (max. 100 bar) 2/2

ACTUATION	BODY MATERIAL	FUNCTION	CONNECTION	ORIFICE (MM)	MAX. PRESSURE (BAR)	PAGE
Direct operated	**Brass body**	**Normally closed**	1/8	1.5 to 2.5	70.0	86
			1/4	1.2 to 3	100.0	86
			SB	1.5 to 3	100.0	88
		Normally open	1/8	2.5	30.0	88
			1/4	1.5 to 2.5	40.0	88
Pilot operated	**Brass body**	**Normally closed**	1/4	8	40.0	90
			3/8	11	40.0	90
			1/2	14.5	40.0	90
			SB	14	40.0	92
		Normally open	1/4	8	40.0	90
			3/8	11	40.0	92
			1/2	14.5	40.0	92
			SB	14	40.0	92

Notes:
Direct operated valves: pressure range from 0 to max pressure.
Pilot operated valves: pressure range from 0.3 to 0.5 bar to max. pressure (refer to tables).

Parker Lucifer SA
Fluid Control Division Europe
CH-1227 Carouge-Genève

Valves for oil (hydraulic) and neutral liquids (max. 100 bar)

2/2

Direct operated

Brass body/Pipe mounting

Normally closed

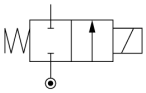

Port size G	Orifice (mm)	Flow factors (L/min) kv	Flow factors (L/min) Qmax	Admissible differential pressure bar Min	Admissible differential pressure bar Max DC	Admissible differential pressure bar Max AC	Fluid temp. °C	Seat disc	Reference numbers Global valve reference	Reference numbers Valve reference no.	Reference numbers Housing	Reference numbers OR Coil	Power consumption (W) DC	Power consumption (W) AC	Wt. (g)	El. Part Group *	Dim ref.
1/8	1.5	1.5	12.5	0	25	60	75	PCTFE	7121KBG1GF00	**E121K14**	**2995**	**481865**	9	8	300	2	3
	1.5	1.5	12.5	0	30	70	75	PCTFE			**4270**	**481000**	8	8	420	2	
	1.5	1.5	12.5	0	55	70	75	PCTFE			**4270**	**486265**	14	14	430		
	2.5	3.5	25	0	10	28	100	Ruby	7121KBG1LR00	**E121K23**	**2995**	**481865**	9	8	300	2	3
	2.5	3.5	25	0	12	34	130	Ruby			**4270**	**481000**	8	8	420	2	
	2.5	3.5	25	0	22	50	120	Ruby			**4270**	**486265**	14	14	430		
1/4	1.2	0.85	8.5	0	36	80	100	Ruby	7121KBG2ER00	**E121K65**	**2995**	**481865**	9	8	290		3
	1.2	0.85	8.5	0	43	100	130	Ruby			**4270**	**481000**	8	8	410		
	1.2	0.85	8.5	0	75	100	120	Ruby			**4270**	**486265**	14	14	420		
	1.5	1.5	12.5	0	25	60	75	PCTFE	7121KBG2GF00	**E121K04**	**2995**	**481865**	9	8	290	2	3
	1.5	1.5	12.5	0	30	70	75	PCTFE			**4270**	**481000**	8	8	410	2	
	1.5	1.5	12.5	0	55	70	75	PCTFE			**4270**	**486265**	14	14	420		
	1.5	1.5	15	0	25	60	100	Ruby	7121KBG2GR00	**E121K67**	**2995**	**481865**	9	8	290		3
	1.5	1.5	15	0	30	75	130	Ruby			**4270**	**481000**	8	8	410		
	1.5	1.5	15	0	55	100	120	Ruby			**4270**	**486265**	14	14	420		
	2.5	3.5	25	0	10	28	100	Ruby	7121KBG2LR00	**E121K63**	**2995**	**481865**	9	8	290		3
	2.5	3.5	25	0	12	34	130	Ruby			**4270**	**481000**	8	8	410		
	2.5	3.5	25	0	22	50	120	Ruby			**4270**	**486265**	14	14	420		
	3	4.5	27	0	7	20	75	PCTFE	7121KBG2NF00	**E121K03**	**2995**	**481865**	9	8	290	2	3
	3	4.5	27	0	8.5	25	75	PCTFE			**4270**	**481000**	8	8	410	2	
	3	4.5	27	0	15	36	75	PCTFE			**4270**	**486265**	14	14	420		
	3	4.5	27	0	7	20	100	Ruby	7121KBG2NR00	**E121K64**	**2995**	**481865**	9	8	290		3
	3	4.5	27	0	8.5	25	130	Ruby			**4270**	**481000**	8	8	410		
	3	4.5	27	0	15	36	120	Ruby			**4270**	**486265**	14	14	420		

Table continued on page 88

Notes:

* See Electrical Parts Group table at end of section

Parker Lucifer SA
Fluid Control Division Europe
CH-1227 Carouge-Genève

Tel: +45 63 12 83 00 | Email: ps@hymatik.com | www.hymatik.com | Hvidkaervej 27a, DK-5250 Odense SV, Denmark

Valves for oil (hydraulic) and neutral liquids 2/2 - Direct operated

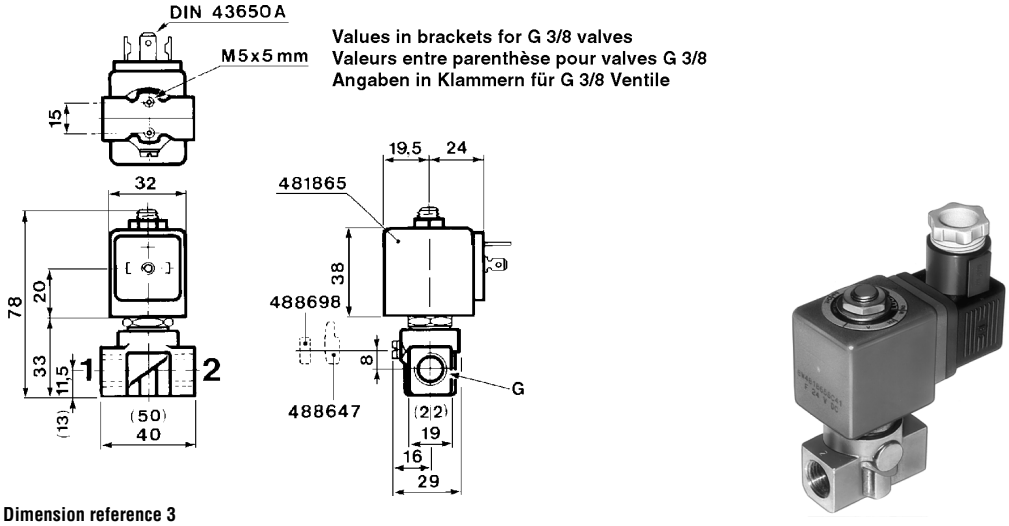

Dimension reference 3

Parker Lucifer SA
Fluid Control Division Europe
CH-1227 Carouge-Genève

Valves for oil (hydraulic) and neutral liquids 2/2 - Direct operated

Port size G	Orifice (mm)	Flow factors (L/min) kv	Flow factors (L/min) Qmax	Admissible differential pressure bar Min	Admissible differential pressure bar Max DC	Admissible differential pressure bar Max AC	Fluid temp. °C	Seat disc	Reference numbers: Global valve reference	Reference numbers: Valve reference no.	Reference numbers: Housing	Reference numbers: OR Coil	Power consumption (W) DC	Power consumption (W) AC	Wt. (g)	El. Part Group *	Dim ref.

Brass body/Pipe mounting

Normally open

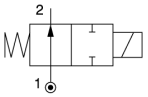

1/8	2.5	3.5	-	0	-	30	140	Ruby	7122KBG1LR00	**122K9363**	**4270**	**481044**	-	14	445		4
	2.5	3.5	-	0	30	30	140	Ruby			**4270**	**486265**	14	14	455		
1/4	1.5	1.5	8	0	30	30	100	PCTFE	7122KBG2GF00	**122K84**	**2995**	**481865**	9	8	290	2	3
	1.5	1.5	8	0	30	30	120	PCTFE			**4270**	**481000**	8	8	410	2	
	1.5	1.5	9.5	0	40	40	100	Ruby	7122KBG2GR00	**122K8408**	**2995**	**481865**	9	8	290	2	3
	1.5	1.5	9.5	0	40	40	130	Ruby			**4270**	**481000**	8	8	410	2	
	2.5	3.5	-	0	-	30	140	Ruby	7122KBG2LR00	**122K8363**	**4270**	**481044**	-	14	425		4
	2.5	3.5	-	0	30	30	140	Ruby			**4270**	**486265**	14	14	435		

Brass body/Sub-base mounting

Normally closed

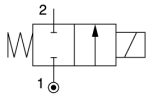

SB	1.5	1.5	12.5	0	25	60	75	PCTFE	7121FBF4GF00	**E121F44**	**2995**	**481865**	9	8	250	2	12
	1.5	1.5	12.5	0	30	70	75	PCTFE			**4270**	**481000**	8	8	370	2	
	1.5	1.5	12.5	0	55	70	75	PCTFE			**4270**	**486265**	14	14	380	2	
	1.5	1.5	15	0	25	60	100	Ruby	7121FBF4GR00	**121F67**	**2995**	**481865**	9	8	255	2	12
	1.5	1.5	15	0	30	75	130	Ruby			**4270**	**481000**	8	8	375	2	
	1.5	1.5	15	0	55	100	120	Ruby			**4270**	**486265**	14	14	385	2	
	2.5	3.5	25	0	10	28	100	Ruby	7121FBF4LR00	**121F63**	**2995**	**481865**	9	8	255	2	12
	2.5	3.5	25	0	12	34	130	Ruby			**4270**	**481000**	8	8	375	2	
	2.5	3.5	25	0	22	50	120	Ruby			**4270**	**486265**	14	14	385	2	
	3	4.5	27	0	7	20	75	PCTFE	7121FBF4NF00	**E121F43**	**2995**	**481865**	9	8	250	2	12
	3	4.5	27	0	8.5	25	75	PCTFE			**4270**	**481000**	8	8	370	2	
	3	4.5	27	0	15	36	75	PCTFE			**4270**	**486265**	14	14	380	2	
	3	4.5	27	0	7	20	100	Ruby	7121FBF4NR00	**121F64**	**2995**	**481865**	9	8	255	2	12
	3	4.5	27	0	8.5	25	130	Ruby			**4270**	**481000**	8	8	375	2	
	3	4.5	27	0	15	36	120	Ruby			**4270**	**486265**	14	14	385	2	

Notes:

* See Electrical Parts Group table at end of section

Parker Lucifer SA
Fluid Control Division Europe
CH-1227 Carouge-Genève

Valves for oil (hydraulic) and neutral liquids 2/2 - Direct operated

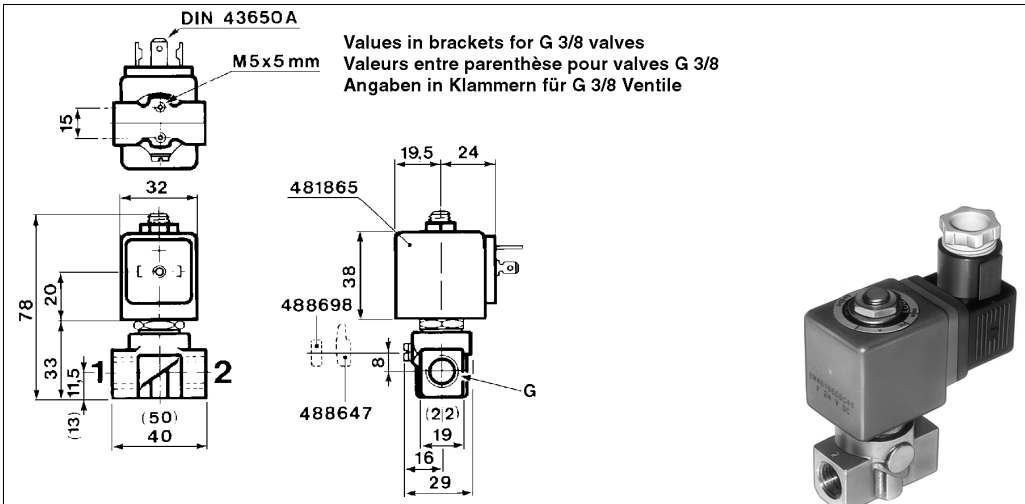

Dimension reference 3

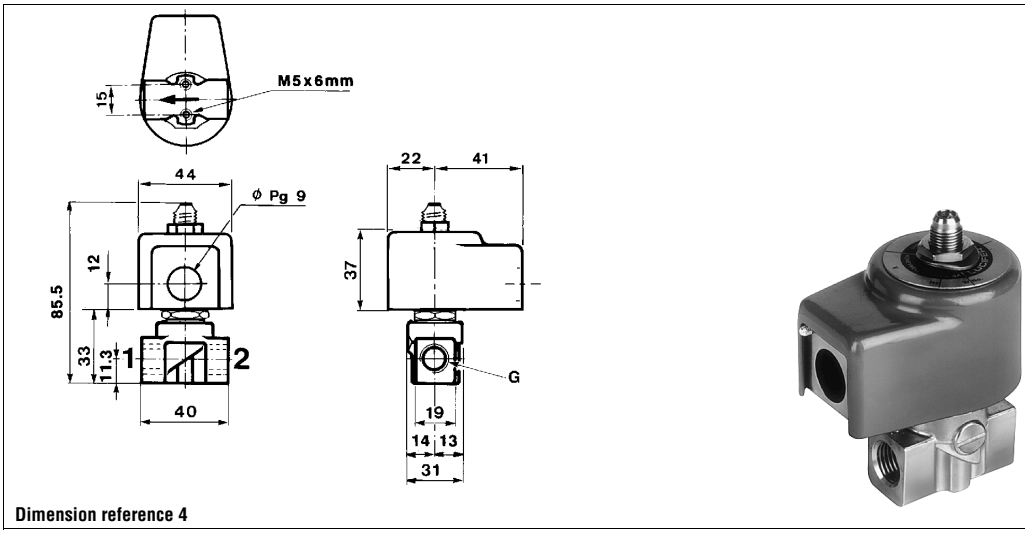

Dimension reference 4

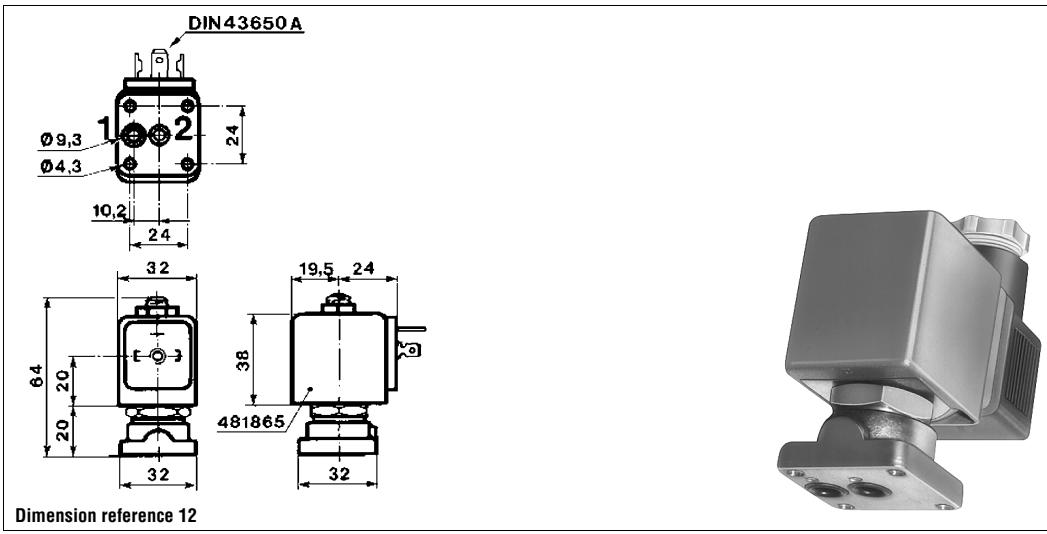

Dimension reference 12

Parker Lucifer SA
Fluid Control Division Europe
CH-1227 Carouge-Genève

Valves for oil (hydraulic) and neutral liquids

2/2

Applications

Pilot operated valves are ideally suited to shut-off applications of liquids with high flow and pressure. A minimum operating pressure is required: refer to tables.

Pilot operated

Brass body/Pipe mounting

Normally closed

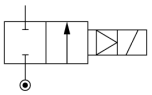

Port size G	Orifice (mm)	Flow factors (L/min) kv	Flow factors (L/min) Qmax	Admissible differential pressure bar Min	Admissible differential pressure bar Max DC	Admissible differential pressure bar Max AC	Fluid temp. °C	Seat disc	Reference numbers Global valve reference	Reference numbers Valve reference no.	Reference numbers Housing	Reference numbers OR Coil	Power consumption (W) DC	Power consumption (W) AC	Wt. (g)	El. Part Group *	Dim ref.
1/4	8	36	36	0.3 [2]	25	40	100	FKM	7321HBG2SV00	**E321H21** [1]	**2995**	**481865**	9	8	800	2	9
	8	36	36	0.3	30	40	100	FKM			**4270**	**481000**	8	8	920	2	
	8	36	36	0.3 [2]	40	40	100	FKM			**4270**	**486265**	14	14	930	2	
	8	36	36	0.3 [2]	25	40	100	NBR	7321HBG2SN00	**E321H11** [1]	**2995**	**481865**	9	8	800	2	9
	8	36	36	0.3 [2]	30	40	100	NBR			**4270**	**481000**	8	8	920	2	
3/8	11	50	50	0.3 [2]	25	40	100	FKM	7321HBG3TV00	**E321H23** [1]	**2995**	**481865**	9	8	780	2	9
	11	50	50	0.3 [2]	30	40	120	FKM			**4270**	**481000**	8	8	900	2	
	11	50	50	0.3 [2]	40	40	140	FKM			**4270**	**486265**	14	14	910	2	
	11	50	50	0.3 [2]	25	40	100	NBR	7321HBG3TN00	**E321H13** [1]	**2995**	**481865**	9	8	780	2	9
	11	50	50	0.3 [2]	30	40	100	NBR			**4270**	**481000**	8	8	900	2	
1/2	14.5	60	60	0.3 [2]	25	40	100	FKM	7321HBG4UV00	**E321H25** [1]	**2995**	**481865**	9	8	740	2	9
	14.5	60	60	0.3 [2]	30	40	120	FKM			**4270**	**481000**	8	8	860	2	
	14.5	60	60	0.3 [2]	40	40	140	FKM			**4270**	**486265**	14	14	870	2	
	14.5	60	60	0.3 [2]	25	40	100	NBR	7321HBG4UN00	**E321H15** [1]	**2995**	**481865**	9	8	740	2	9
	14.5	60	60	0.3 [2]	30	40	100	NBR			**4270**	**481000**	8	8	860	2	

Brass body/Pipe mounting

Normally open

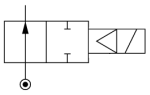

1/4	8	36	36	0.3 [2]	40	40	100	FKM	7322HBG2SV00	**322H7106** [1]	**2995**	**481865**	9	8	820		9
	8	36	36	0.3 [2]	40	40	120	FKM			**4270**	**481000**	8	8	940		
	8	36	36	0.3 [2]	40	40	140	FKM			**4270**	**486265**	14	14	950		

Table continued on page 92

Notes:

* See Electrical Parts Group table at end of section

1. Pilot seat discs from ruby (synthetic)
2. Minimum pressure differential = 0.3 bar for opening and 0 bar for closing

Parker Lucifer SA
Fluid Control Division Europe
CH-1227 Carouge-Genève

Tel: +45 63 12 83 00 | Email: ps@hymatik.com | www.hymatik.com | Hvidkaervej 27a, DK-5250 Odense SV, Denmark

Valves for oil (hydraulic) and neutral liquids 2/2 - Pilot operated

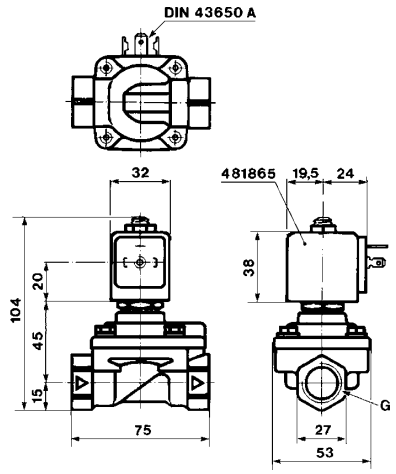



Dimension reference 9

Parker Lucifer SA
Fluid Control Division Europe
CH-1227 Carouge-Genève

Valves for oil (hydraulic) and neutral liquids 2/2 - Pilot operated

Port size G	Orifice (mm)	Flow factors (L/min) kv	Qmax	Admissible differential pressure bar Min	Max DC	Max AC	Fluid temp. °C	Seat disc	Reference numbers Global valve reference	Valve reference no.	Housing	Coil	Power consumption (W) DC	AC	Wt. (g)	El. Part Group *	Dim ref.
												OR					

Brass body/Pipe mounting

Normally open

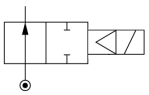

1/4	8	36	36	0.3 [2]	25	40	100	NBR	7322HBG2SN00	**322H71** [1]	**2995**	**481865**	9	8	840		9
	8	36	36	0.3 [2]	30	40	100	NBR			**4270**	**481000**	8	8	960		
3/8	11	50	50	0.3 [2]	40	40	100	FKM	7322HBG3TV00	**322H7306** [1]	**2995**	**481865**	9	8	800		9
	11	50	50	0.3 [2]	40	40	100	FKM			**4270**	**481000**	8	8	920		
	11	50	50	0.3 [2]	40	40	140	FKM			**4270**	**486265**	14	14	930		
	11	50	50	0.3 [2]	40	40	100	NBR	7322HBG3TN00	**322H73** [1]	**2995**	**481865**	9	8	800		9
	11	50	50	0.3 [2]	40	40	100	NBR			**4270**	**481000**	8	8	920		
1/2	14.5	60	60	0.3 [2]	40	40	100	FKM	7322HBG4UV00	**322H7506** [1]	**2995**	**481865**	9	8	760		9
	14.5	60	60	0.3 [2]	40	40	120	FKM			**4270**	**481000**	8	8	880		
	14.5	60	60	0.3 [2]	40	40	140	FKM			**4270**	**486265**	14	14	890		
	14.5	60	60	0.3 [2]	40	40	100	NBR	7322HBG4UN00	**322H75** [1]	**2995**	**481865**	9	8	760		9
	14.5	60	60	0.3 [2]	40	40	100	NBR			**4270**	**481000**	8	8	880		

Brass body/Sub-base mounting

Normally closed

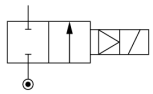

SB	14	45	45	0.3 [2]	25	40	100	FKM	7321FBF3TV00	**E321F3202** [1]	**2995**	**481865**	9	8	650	2	13
	14	45	45	0.3 [2]	30	40	120	FKM			**4270**	**481000**	8	8	770	2	
	14	45	45	0.3 [2]	40	40	120	FKM			**4270**	**486265**	14	14	780	2	
	14	45	45	0.3	25	40	100	NBR	7321FBF3TN00	**E321F32** [1]	**2995**	**481865**	9	8	650	2	13
	14	45	45	0.3	30	40	100	NBR			**4270**	**481000**	8	8	770	2	
	14	45	45	0.3	40	40	100	NBR			**4270**	**486265**	14	14	780	2	

Brass body/Sub-base mounting

Normally open

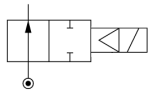

SB	14	45	45	0.3 [2]	40	40	100	FKM	7322FBF3TV00	**322F7206** [1]	**2995**	**481865**	9	8	650		13
	14	45	45	0.3 [2]	40	40	120	FKM			**4270**	**481000**	8	8	770		
	14	45	45	0.3 [2]	40	40	140	FKM			**4270**	**486265**	14	14	780		
	14	45	45	0.3 [2]	40	40	75	NBR	7322FBF3TN00	**322F72** [1]	**2995**	**481865**	9	8	650		13
	14	45	45	0.3 [2]	40	40	75	NBR			**4270**	**481000**	8	8	770		

Notes:

* See Electrical Parts Group table at end of section

1. Pilot seat discs from ruby (synthetic)
2. Minimum pressure differential = 0.3 bar for opening and 0 bar for closing

Parker Lucifer SA
Fluid Control Division Europe
CH-1227 Carouge-Genève

Tel: +45 63 12 83 00 | Email: ps@hymatik.com | www.hymatik.com | Hvidkaervej 27a, DK-5250 Odense SV, Denmark

Valves for oil (hydraulic) and neutral liquids 2/2 - Pilot operated

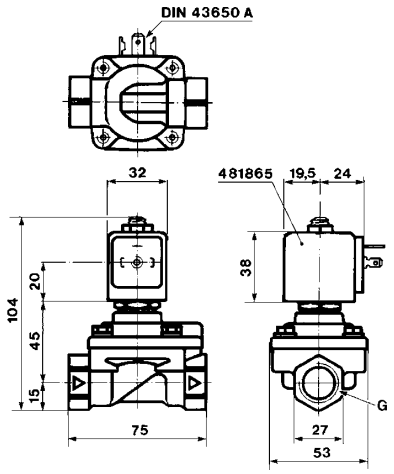

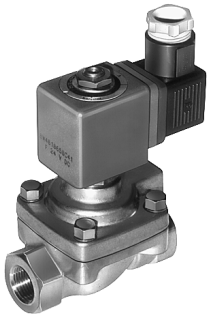

Dimension reference 9

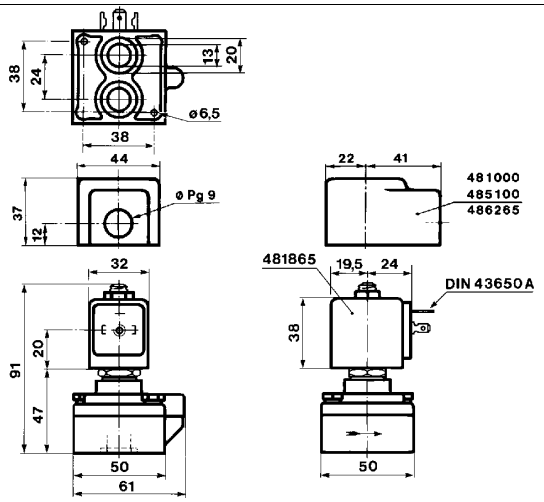



Dimension reference 13

Parker Lucifer SA
Fluid Control Division Europe
CH-1227 Carouge-Genève

Electrical parts options with 2/2 valves for oil (hydraulic) and neutral liquids

El.part Group	Coil	Protection class	Protection class / Temperature class	Power DC	Power AC	Coil Order No.	Coil Ref. No.	Connection	Housing Order No.	Housing Ref. No.	Ambient temp. min.	Ambient temp. max.
1	**22 mm**	IP 65	**Class F**	2.5 W	2 W	DA01	**488980**	for DIN plug	A0	**8993**	-40	50
		IP 65	**Class F**	2.5 W	2 W	DA02	**481045**	with DIN plug	A0	**8993**	-40	50
		IP 65	**Class F**	5 W	4 W	DA03	**481180**	for DIN plug	A0	**8993**	-40	50
		IP 65	**Class F**	5 W	4 W	DA04	**481530**	with DIN plug	A0	**8993**	-40	50
		IP 65	**EEx m II T4**	5 W	4 W	VA01	**482605**	with 1500mm cable	00	**-**	-40	50
		IP 65	**EEx m II T5**	2.5 W	2 W	VA02	**482606**	with 1500mm cable	00	**-**	-40	50
2	**32 mm** (Std)	IP 65	**Class F**	9 W	8 W	DZ02	**481865**	for DIN plug	N1	**2995**	-40	50
		IP 65		9 W	8 W	DZ03	**482725**	with DIN plug	N1	**2995**	-40	50
		IP 65	**Class H**	9 W	8 W	DZ04	**492453**	for DIN plug	N1	**2995**	-40	50
		IP 65		9 W	8 W	DZ05	**492726**	with DIN plug	N1	**2995**	-40	50
		IP 65	**Class F, 50/60 Hz**	-	9 W	DZ06	**483510**	for DIN plug	N1	**2995**	-40	50
		IP 65		-	9 W	DZ07	**482635**	with DIN plug	N1	**2995**	-40	50
		IP 65	**EEx m II T4**	9 W	8 W	HZ05	**492670**	with 3000mm cable	00	**-**	-40	40
		IP 65	**Class H**	14 W	14 W	DZ08	**492425**	for DIN plug	N1	**2995**	-40	50
		IP 65		14 W	14 W	DZ09	**492727**	with DIN plug	N1	**2995**	-40	50
	50 mm (Std)	IP10 / IP 44	**Class F**	8 W	8 W	EZ01	**481000**	screw-terminals	E0	**4270**	-40	50
		IP10 / IP 44	**Class H**	8 W	8 W	EZ02	**485100**	screw-terminals	E0	**4270**	-40	50
		IP10 / IP 44	**Class H**	14 W	14 W	EZ92	**486265**	screw-terminals	E0	**4270**	-40	50
		IP 67	**Class F, M20x1.5**	8 W	8 W	EZ01	**481000**	screw-terminals	G1	**4538**	-40	50
		IP 65	**EEx m II T5/T4**	9 W	8 W	VZ01	**492070**	with 1500mm cable	00	**-**	-40	40/65
		IP 67	**EEx me II T4**	8 W	8 W	HZ06	**483371**	for cable connection	00	**-**	-40	65
		IP 66	**EEx me II T3/T4**	11 W	9 W	VZ03	**492190**	for cable connection	00	**-**	-40	75/40
3	**32 mm**	IP 65	**Class H**	-	14 W	DZ08	**492425**	for DIN plug	N1	**2995**	-40	50
4	**50 mm (impulse)**	IP10 / IP 44	**Class F**	-	11 W	MZ01	**484990**	screw-terminals	E1	**4269**	-40	50
		IP10 / IP 44	**Class F**	13 W	-	MZ02	**485400**	screw-terminals	E1	**4269**	-40	50
5	**50 mm**	IP 54	**EEx d IIC T4/T5/T6**	8 W	8 W	HZ08	**483250**	for cable 1/2 NPT	00	**-**	-40	80/75/60
6	**32 mm (Miniwatt)**	IP 65	**Class F**	1.6 W	-	DZ10	**482740**	for DIN plug	N1	**2995**	-40	50
		IP 65	**Class F**	1.6W	-	DZ11	**482745**	with DIN plug	N1	**2995**	-40	50
	50 mm (Miniwatt)	IP 67	**EEx me II T5**	2.5 W	-	VZ04	**491117**	for cable connection	00	**-**	-40	65
		IP 67	**EEx m II T5/T4**	2.5 W	2.5 W	VZ05	**492370**	with 1500mm cable	00	**-**	-40	40/65
		IP 66	**EEx me II T6/T5**	2.5 W	2.5 W	VZ06	**492390**	for cable connection	00	**-**	-40	40/75
7	**32 mm**	IP 65	**EEx ia II C T6**	0.4 W	-	DZ12	**483580.01**	for DIN plug	N1	**2995**	-40	55
		IP 65		0.4 W	-	DZ13	**483960.01**	with DIN plug	N1	**2995**	-40	55
	50 mm	IP 66	**EEx ia II C T6**	0.4 W	-	VZ07	**488650.01**	for cable connection	00	**-**	-40	65
		IP 67		0.4 W	-	VZ08	**488660.01**	with 2000mm cable	00	**-**	-40	65
		IP 65		0.4 W	-	VZ09	**488670.01**	with DIN plug	00	**-**	-40	65

Note: This table is indicative only. Please contact your distributor to confirm your selection.

Parker Lucifer SA
Fluid Control Division Europe
CH-1227 Carouge-Genève

Tel: +45 63 12 83 00 | Email: ps@hymatik.com | www.hymatik.com | Hvidkaervej 27a, DK-5250 Odense SV, Denmark

High corrosion-resistant valves (Stainless Steel) 2/2

ACTUATION	BODY MATERIAL	FUNCTION	CONNECTION	ORIFICE (MM)	MAX. PRESSURE (BAR)	PAGE
Direct operated	**303 Stainless steel body**	**Normally closed**	1/4	1.5 to 5	100.0	96

Notes:
Direct operated valves: pressure range from 0 to max pressure.

Parker Lucifer SA
Fluid Control Division Europe
CH-1227 Carouge-Genève

High corrosion-resistant valves (Stainless Steel)

2/2

Applications

The valves in this section are made of corrosion-resistant material internally and externally.
Please refer to the fluid compatibility chart in this catalogue for detailed fluid compatibility.



Direct operated

303 Stainless steel body/Pipe mounting

Normally closed

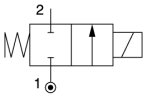

Port size G	Orifice (mm)	Flow factors (L/min) Liquids kv	Liquids Qmax	Gases Qn	Admissible differential pressure bar Min	Max DC	Max AC	Fluid temp. °C Gas	Liquid	Oil	Seat disc	Reference numbers Global valve reference	Valve reference no.	OR Housing	Coil	Power consumption (W) DC	AC	Wt. (g)	El. Part Group *	Dim ref.
1/4	1.5	1.5	12.5	80	0	20	20	100	100	100	FKM	7121VVG2GV00	**121V5406**	**2995**	**481865**	9	8	410	2	6
	1.5	1.5	12.5	80	0	20	20	120	120	120	FKM			**4270**	**481000**	8	8	530	2	
	1.5	1.5	15	80	0	25	60	-	100	-	Ruby	7121VVG2GR00	**121V5463**	**2995**	**481865**	9	8	410	2	6
	1.5	1.5	15	80	0	30	75	-	130	-	Ruby			**4270**	**481000**	8	8	530	2	
	1.5	1.5	15	80	0	55	100	-	140	-	Ruby			**4270**	**486265**	14	14	540		
	2.5	3.5	8.5	220	0	7	14	100	100	100	FKM	7121VVG2LV00	**121V5706**	**2995**	**481865**	9	8	410	2	6
	2.5	3.5	8.5	220	0	9	14	120	120	120	FKM			**4270**	**481000**	8	8	530	2	
	2.5	3.5	8.5	220	0	14	14	120	120	120	FKM			**4270**	**486265**	14	14	540		
	2.5	3.5	25	220	0	10	28	-	100	-	Ruby	7121VVG2LR00	**121V5763**	**2995**	**481865**	9	8	410	2	6
	2.5	3.5	25	220	0	12	34	-	130	-	Ruby			**4270**	**481000**	8	8	530	2	
	2.5	3.5	25	220	0	22	50	-	140	-	Ruby			**4270**	**486265**	14	14	540		
	3	4.5	9	315	0	8.5	10	75	75	75	FKM	7121VVG2NV1D	**121V53061D**	**-**	**483250**	8	8	1375	5	6773
	3	4.5	27	315	0	7	10	100	100	100	FKM	7121VVG2NV00	**121V5306**	**2995**	**481865**	9	8	410	2	6
	3	4.5	27	315	0	8.5	10	120	120	120	FKM			**4270**	**481000**	8	8	530	2	
	3	4.5	27	315	0	10	10	120	120	120	FKM			**4270**	**486265**	14	14	530		
	3	4.5	27	315	0	7	20	-	100	-	Ruby	7121VVG2NR00	**121V5363**	**2995**	**481865**	9	8	410	2	6
	3	4.5	27	315	0	8.5	25	-	130	-	Ruby			**4270**	**481000**	8	8	530	2	
	3	4.5	27	315	0	15	36	-	140	-	Ruby			**4270**	**486265**	14	14	540		
	4	7	10.5	450	0	4	10	100	100	100	FKM	7121VVG2QV00	**121V5206**	**2995**	**481865**	9	8	410	2	6
	4	7	10.5	450	0	5	10	120	120	120	FKM			**4270**	**481000**	8	8	530	2	
	4	7	10.5	450	0	10	-	120	120	120	FKM			**4270**	**486265**	14	-	540		
	4	7	35	450	0	4	12	-	100	-	Ruby	7121VVG2QR00	**121V5263**	**2995**	**481865**	9	8	410	2	6
	4	7	35	450	0	5	15	-	130	-	Ruby			**4270**	**481000**	8	8	530	2	
	4	7	35	450	0	10	22	-	130	-	Ruby			**4270**	**486265**	14	14	540		
	4	7	35	450	0	3.5	3.5	-	-	100	PTFE	7121VVG2QT00	**121V5212**	**2995**	**481865**	9	8	410	2	6
	4	7	35	450	0	3.5	3.5	-	-	130	PTFE			**4270**	**481000**	8	8	530	2	

Table continued on page 98

Notes:

* See Electrical Parts Group table at end of section

Parker Lucifer SA
Fluid Control Division Europe
CH-1227 Carouge-Genève

Tel: +45 63 12 83 00 | Email: ps@hymatik.com | www.hymatik.com | Hvidkaervej 27a, DK-5250 Odense SV, Denmark

High corrosion-resistant valves (Stainless Steel) 2/2 - Direct operated

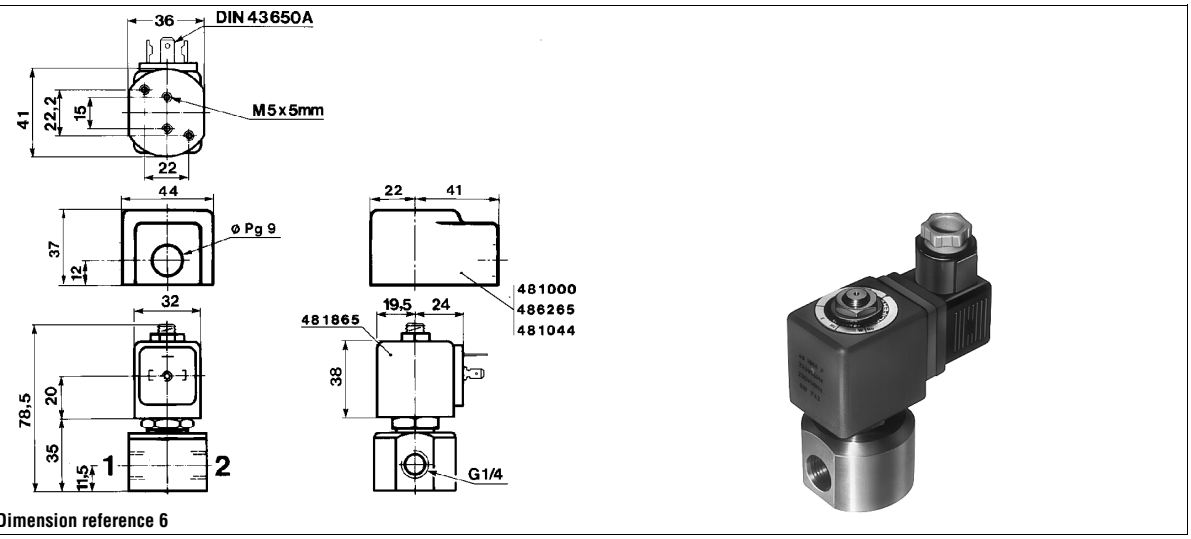

Dimension reference 6



Dimension reference 6773

Parker Lucifer SA
Fluid Control Division Europe
CH-1227 Carouge-Genève

High corrosion-resistant valves (Stainless Steel) 2/2 - Direct operated

Port size	Orifice (mm)	Flow factors (L/min)			Admissible differential pressure bar			Fluid temp. °C			Seat disc	Reference numbers				Power consumption (W)		Wt. (g)	El. Part Group *	Dim ref.
		Liquids		Gases	Min	Max		Gas	Liquid	Oil		Global valve reference	Valve reference no.	Housing	Coil	DC	AC			
G		kv	Qmax	Qn		DC	AC													

303 Stainless steel body/Pipe mounting

Normally closed

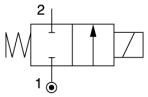

1/4	5	10	11.5	750	0	2.8	7	75	75	75	FKM	7121VVG2SV1D	**121V51061D**	-	**483250**	8	8	1375	5	6773
	5	10	11.5	750	0	2	7	100	100	100	FKM	7121VVG2SV00	**121V5106**	**2995**	**481865**	9	8	410	2	6
	5	10	11.5	750	0	2.8	7	120	100	120	FKM			**4270**	**481000**	8	8	530	2	
	5	10	11.5	750	0	5	7	120	120	120	FKM			**4270**	**486265**	14	14	540		
	5	10	40	750	0	2	8.5	-	100	-	Ruby	7121VVG2SR00	**121V5163**	**2995**	**481865**	9	8	410	2	6
	5	10	40	750	0	3.5	10	-	130	-	Ruby			**4270**	**481000**	8	8	530	2	
	5	10	40	750	0	6.5	14	-	140	-	Ruby			**4270**	**486265**	14	14	540		
	5	10	35	750	0	2	2.8	100	100	100	PTFE	7121VVG2ST00	**121V5112**	**2995**	**481865**	9	8	410	2	6
	5	10	35	750	0	2.8	2.8	130	130	130	PTFE			**4270**	**481000**	8	8	530	2	

Notes:

* See Electrical Parts Group table at end of section

Parker Lucifer SA
Fluid Control Division Europe
CH-1227 Carouge-Genève

Tel: +45 63 12 83 00 | Email: ps@hymatik.com | www.hymatik.com | Hvidkaervej 27a, DK-5250 Odense SV, Denmark

High corrosion-resistant valves (Stainless Steel) 2/2 - Direct operated

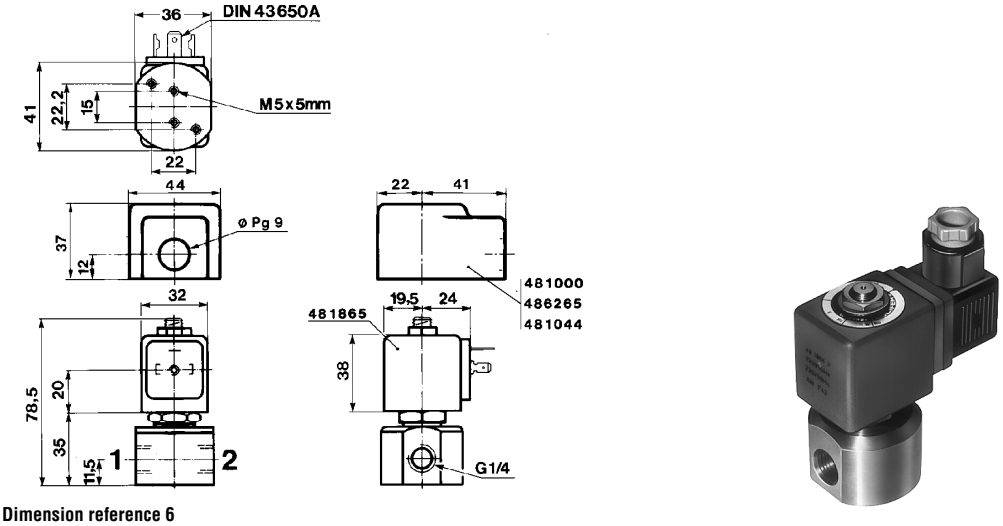

Dimension reference 6

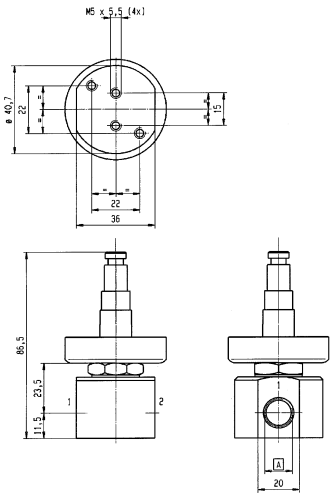

Dimension reference 6773

Parker Lucifer SA
Fluid Control Division Europe
CH-1227 Carouge-Genève

Electrical parts options with 2/2 high corrosion resistant stainless steel valves

El.part Group	Coil	Protection class	Protection class / Temperature class	Power DC	Power AC	Coil Order No.	Coil Ref. No.	Connection	Housing Order No.	Housing Ref. No.	Ambient temp. min.	Ambient temp. max.
1	**22 mm**	IP 65	**Class F**	2.5 W	2 W	DA01	**488980**	for DIN plug	A0	**8993**	-40	50
		IP 65	**Class F**	2.5 W	2 W	DA02	**481045**	with DIN plug	A0	**8993**	-40	50
		IP 65	**Class F**	5 W	4 W	DA03	**481180**	for DIN plug	A0	**8993**	-40	50
		IP 65	**Class F**	5 W	4 W	DA04	**481530**	with DIN plug	A0	**8993**	-40	50
		IP 65	**EEx m II T4**	5 W	4 W	VA01	**482605**	with 1500mm cable	00	-	-40	50
		IP 65	**EEx m II T5**	2.5 W	2 W	VA02	**482606**	with 1500mm cable	00	-	-40	50
2	**32 mm** (Std)	IP 65	**Class F**	9 W	8 W	DZ02	**481865**	for DIN plug	N1	**2995**	-40	50
		IP 65		9 W	8 W	DZ03	**482725**	with DIN plug	N1	**2995**	-40	50
		IP 65	**Class H**	9 W	8 W	DZ04	**492453**	for DIN plug	N1	**2995**	-40	50
		IP 65		9 W	8 W	DZ05	**492726**	with DIN plug	N1	**2995**	-40	50
		IP 65	**Class F, 50/60 Hz**	-	9 W	DZ06	**483510**	for DIN plug	N1	**2995**	-40	50
		IP 65		-	9 W	DZ07	**482635**	with DIN plug	N1	**2995**	-40	50
		IP 65	**EEx m II T4**	9 W	8 W	HZ05	**492670**	with 3000mm cable	00	-	-40	40
		IP 65	**Class H**	14 W	14 W	DZ08	**492425**	for DIN plug	N1	**2995**	-40	50
		IP 65		14 W	14 W	DZ09	**492727**	with DIN plug	N1	**2995**	-40	50
	50 mm (Std)	IP10 / IP 44	**Class F**	8 W	8 W	EZ01	**481000**	screw-terminals	E0	**4270**	-40	50
		IP10 / IP 44	**Class H**	8 W	8 W	EZ02	**485100**	screw-terminals	E0	**4270**	-40	50
		IP10 / IP 44	**Class H**	14 W	14 W	EZ92	**486265**	screw-terminals	E0	**4270**	-40	50
		IP 67	**Class F, M20x1.5**	8 W	8 W	EZ01	**481000**	screw-terminals	G1	**4538**	-40	50
		IP 65	**EEx m II T5/T4**	9 W	8 W	VZ01	**492070**	with 1500mm cable	00	-	-40	40/65
		IP 67	**EEx me II T4**	8 W	8 W	HZ06	**483371**	for cable connection	00	-	-40	65
		IP 66	**EEx me II T3/T4**	11 W	9 W	VZ03	**492190**	for cable connection	00	-	-40	75/40
3	**32 mm**	IP 65	**Class H**	-	14 W	DZ08	**492425**	for DIN plug	N1	**2995**	-40	50
4	**50 mm (impulse)**	IP10 / IP 44	**Class F**	-	11 W	MZ01	**484990**	screw-terminals	E1	**4269**	-40	50
		IP10 / IP 44	**Class F**	13 W	-	MZ02	**485400**	screw-terminals	E1	**4269**	-40	50
5	**50 mm**	IP 54	**EEx d IIC T4/T5/T6**	8 W	8 W	HZ08	**483250**	for cable 1/2 NPT	00	-	-40	80/75/60
6	**32 mm (Miniwatt)**	IP 65	**Class F**	1.6 W	-	DZ10	**482740**	for DIN plug	N1	**2995**	-40	50
		IP 65	**Class F**	1.6W	-	DZ11	**482745**	with DIN plug	N1	**2995**	-40	50
	50 mm (Miniwatt)	IP 67	**EEx me II T5**	2.5 W	-	VZ04	**491117**	for cable connection	00	-	-40	65
		IP 67	**EEx m II T5/T4**	2.5 W	2.5 W	VZ05	**492370**	with 1500mm cable	00	-	-40	40/65
		IP 66	**EEx me II T6/T5**	2.5 W	2.5 W	VZ06	**492390**	for cable connection	00	-	-40	40/75
7	**32 mm**	IP 65	**EEx ia II C T6**	0.4 W	-	DZ12	**483580.01**	for DIN plug	N1	**2995**	-40	55
		IP 65		0.4 W	-	DZ13	**483960.01**	with DIN plug	N1	**2995**	-40	55
	50 mm	IP 66	**EEx ia II C T6**	0.4 W	-	VZ07	**488650.01**	for cable connection	00	-	-40	65
		IP 67		0.4 W	-	VZ08	**488660.01**	with 2000mm cable	00	-	-40	65
		IP 65		0.4 W	-	VZ09	**488670.01**	with DIN plug	00	-	-40	65

Note: This table is indicative only. Please contact your distributor to confirm your selection.

Parker Lucifer SA
Fluid Control Division Europe
CH-1227 Carouge-Genève

Tel: +45 63 12 83 00 | Email: ps@hymatik.com | www.hymatik.com | Hvidkaervej 27a, DK-5250 Odense SV, Denmark

Oil burner valves (incl. TÜV approved types)

ACTUATION	BODY MATERIAL	FUNCTION	CONNECTION	ORIFICE (MM)	MAX. PRESSURE (BAR)	PAGE
Direct operated	**Brass body**	**Normally closed**	1/8	2.2 to 3	50.0	102
			1/4	1.2 to 3	100.0	104
			3/8	4 to 11	30.0	104
			1/2	14	30.0	104
		Normally open	1/8	2.5	30.0	106
			1/4	2.5 to 4	30.0	106
Pilot operated	**Brass body**	**Normally closed**	1/4	8	40.0	108
			3/8	11	40.0	108
			1/2	14.5 to 15	40.0	108
			SB	14	40.0	110
		Normally open	1/4	8	40.0	108
			3/8	11	40.0	108
			1/2	14.5	40.0	110
			SB	14	40.0	110

Notes:
Direct operated valves: pressure range from 0 to max pressure.
Pilot operated valves: pressure range from 0.3 to 0.5 bar to max. pressure (refer to tables).

Parker Lucifer SA
Fluid Control Division Europe
CH-1227 Carouge-Genève

Tel: +45 63 12 83 00 | Email: ps@hymatik.com | www.hymatik.com | Hvidkaervej 27a, DK-5250 Odense SV, Denmark

Oil burner valves (incl. TÜV approved types)

2/2

Applications

TÜV approved types are described in more detail in Data Sheet 8634/GB.
TÜV approved models are safety shut-off solenoid valves for oil burner systems according to DIN EN 264 and fuel oils EL, L, M and S according to DIN 51603.

Direct operated

Brass body/Pipe mounting

Normally closed

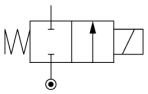

Port size G	Orifice (mm)	Flow factors (L/min) kv	Flow factors (L/min) Qmax	Admissible differential pressure bar Min	Admissible differential pressure bar Max DC	Admissible differential pressure bar Max AC	Fluid temp. °C	Seat disc	Reference numbers Global valve reference	Reference numbers Valve reference no.	Reference numbers Housing	Reference numbers Coil	Power consumption (W) DC	Power consumption (W) AC	Wt. (g)	Dim ref.
1/8	2.2	2.8	11	0	-	25	120	Ruby	7121ZBG1LRT0	- [1]	**2995.20**	**483764**	-	9	270	7863
	2.2	2.8	11	0	-	33	120	Ruby			**2995.20**	**492425**	-	14	270	
	2.5	2.8	16	0	10	24	75	Ruby	7121ZBG1LR00	-	**2995**	**481865**	9	8	270	7893
	2.5	2.8	16	0	5	13	75	Ruby			**2995**	**482730**	7	6	270	
	2.5	2.8	16	0	10	33	-	Ruby	7121ZCBG1LR00	-	**4270**	**481000**	8	8	390	7893
	2.5	3.5	25	0	10	28	100	Ruby	7121KBG1LR00	**E121K23**	**2995**	**481865**	9	8	300	3
	2.5	3.5	25	0	12	34	130	Ruby			**4270**	**481000**	8	8	420	
	2.5	3.5	25	0	22	50	120	Ruby			**4270**	**486265**	14	14	430	

Table continued on page 104

Notes:

1. TUV approved for oil burners

Parker Lucifer SA
Fluid Control Division Europe
CH-1227 Carouge-Genève

Tel: +45 63 12 83 00 | Email: ps@hymatik.com | www.hymatik.com | Hvidkaervej 27a, DK-5250 Odense SV, Denmark

Oil burner valves 2/2 - Direct operated

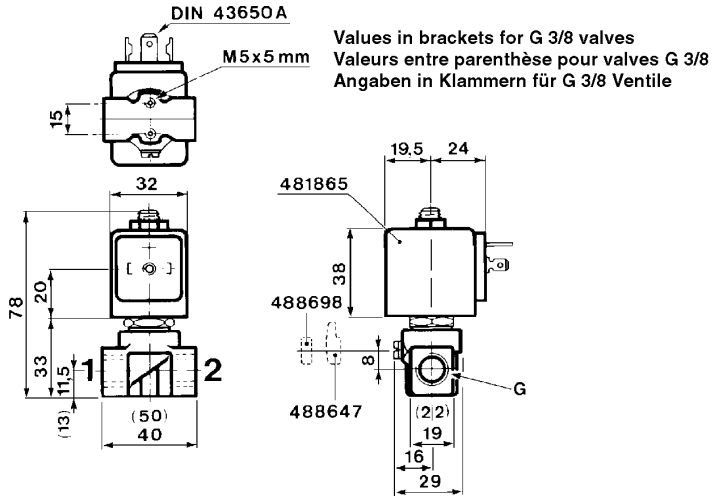



Dimension reference 3

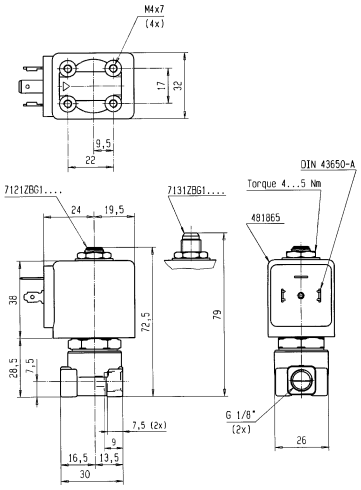



Dimension reference 7893

Parker Lucifer SA
Fluid Control Division Europe
CH-1227 Carouge-Genève

Oil burner valves 2/2 - Direct operated

Brass body/Pipe mounting

Normally closed

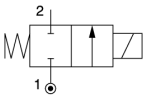

Port size G	Orifice (mm)	Flow factors (L/min) kv	Qmax	Admissible differential pressure bar Min	Max DC	Max AC	Fluid temp. °C	Seat disc	Reference numbers Global valve reference	Valve reference no.	Housing	Coil	Power consumption (W) DC	AC	Wt. (g)	Dim ref.
1/8	3	4	-	0	-	30	160	Ruby	7121KBG1NRT0	**121K2423** [1]	**8760.23**	**483824**	-	19	420	107
	3	4	-	0	-	30	160	Ruby			**8520.23**	**483824**	-	19	480	
1/4	1.2	0.85	8.5	0	36	80	100	Ruby	7121KBG2ER00	**E121K65**	**2995**	**481865**	9	8	290	3
	1.2	0.85	8.5	0	43	100	130	Ruby			**4270**	**481000**	8	8	410	
	1.2	0.85	8.5	0	75	100	120	Ruby			**4270**	**486265**	14	14	420	
	1.5	1.5	15	0	25	60	100	Ruby	7121KBG2GR00	**E121K67**	**2995**	**481865**	9	8	290	3
	1.5	1.5	15	0	30	75	130	Ruby			**4270**	**481000**	8	8	410	
	1.5	1.5	15	0	55	100	120	Ruby			**4270**	**486265**	14	14	420	
	2.5	3.5	25	0	10	28	100	Ruby	7121KBG2LR00	**E121K63**	**2995**	**481865**	9	8	290	3
	2.5	3.5	25	0	12	34	130	Ruby			**4270**	**481000**	8	8	410	
	2.5	3.5	25	0	22	50	120	Ruby			**4270**	**486265**	14	14	420	
	3	4.5	-	0	-	30	160	Ruby	-	**121K6423** [1]	**8520.23**	**483824**	-	19	470	107
	3	4.5	-	0	-	30	160	Ruby	7121KBG2NRT0	**121K6423**	**8760.23**	**483824**	-	19	410	107
	3	4.5	27	0	7	20	100	Ruby	7121KBG2NR00	**E121K64**	**2995**	**481865**	9	8	290	3
	3	4.5	27	0	8.5	25	130	Ruby			**4270**	**481000**	8	8	410	
	3	4.5	27	0	15	36	120	Ruby			**4270**	**486265**	14	14	420	
3/8	4	7.5	10.5	0	4	10	100	FKM	7121KBG3QV00	**121K3206**	**2995**	**481865**	9	8	340	3
	4	7.5	10.5	0	5	10	120	FKM			**4270**	**481000**	8	8	460	
	4	7.5	10.5	0	10	10	120	FKM			**4270**	**486265**	14	14	470	
	5	11	11.5	0	2	7	100	FKM	7121KBG3SV00	**121K3106**	**2995**	**481865**	9	8	340	3
	5	11	11.5	0	2.8	7	120	FKM			**4270**	**481000**	8	8	460	
	5	11	11.5	0	5	7	120	FKM			**4270**	**486265**	14	14	470	
	6	12	12.5	0	1.1	5	100	FKM	7121KBG3UV00	**121K3306**	**2995**	**481865**	9	8	340	3
	6	12	12.5	0	1.5	5	120	FKM			**4270**	**481000**	8	8	460	
	6	12	12.5	0	3	5	120	FKM			**4270**	**486265**	14	14	470	
	11	22	13.5	0	-	30 [2]	160	FKM	7121GBG34VT0	**121G2320** [1]	**8760.23**	**483541**	-	20	-	108
	11	22	13.5	0	-	30 [2]	160	FKM			**8520.23**	**483541**	-	20	-	
1/2	14	25	15	0	-	30 [2]	160	FKM	7121GBG45VT0	**121G2520** [1]	**8760.23**	**483541**	-	20	-	108
	14	25	15	0	-	30 [2]	160	FKM			**8520.23**	**483541**	-	20	-	
	14	25	15	0	-	19	160	FKM	7121GBG45VT1	**121G2523** [1]	**8520.23**	**483824**	-	19	480	107

Table continued on page 106

Notes:

1. TUV approved for oil burners
2. Max. static pressure = 30 bar; max pressure differential = 0.2 bar

Parker Lucifer SA
Fluid Control Division Europe
CH-1227 Carouge-Genève

Tel: +45 63 12 83 00 | Email: ps@hymatik.com | www.hymatik.com | Hvidkaervej 27a, DK-5250 Odense SV, Denmark

Oil burner valves 2/2 - Direct operated

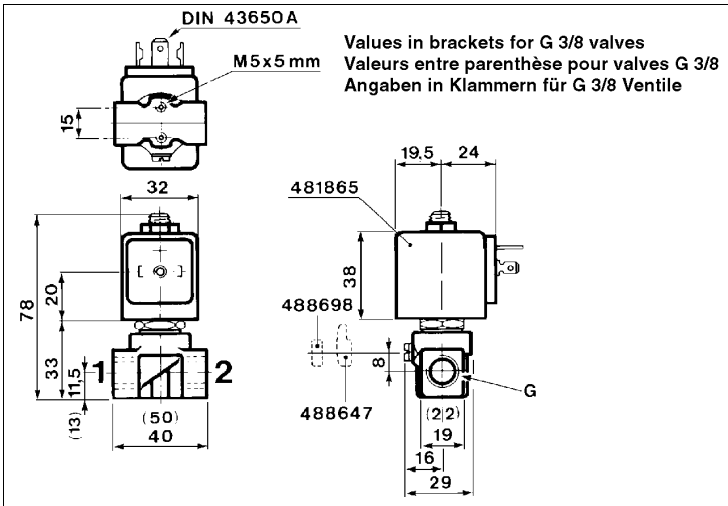



Dimension reference 3

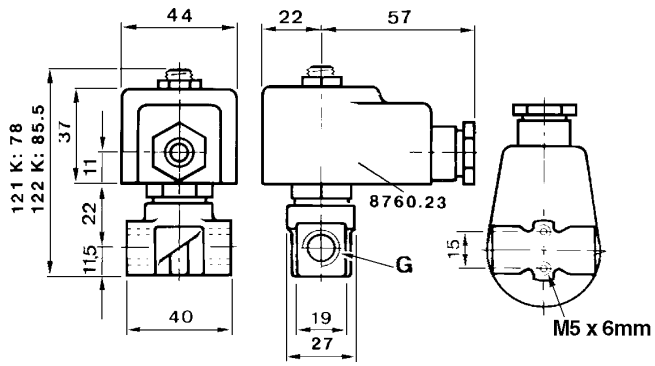



Dimension reference 107

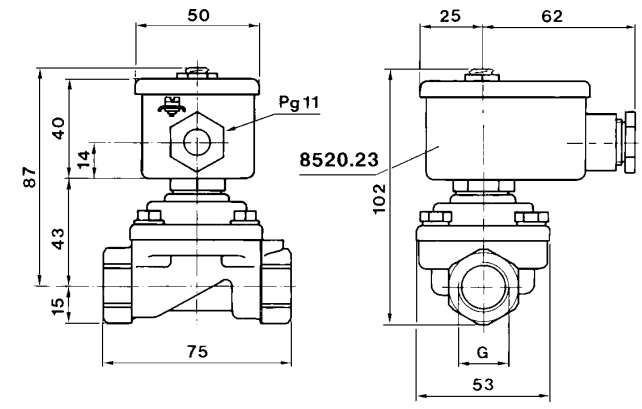



Dimension reference 108

Parker Lucifer SA
Fluid Control Division Europe
CH-1227 Carouge-Genève

Tel: +45 63 12 83 00 | Email: ps@hymatik.com | www.hymatik.com | Hvidkaervej 27a, DK-5250 Odense SV, Denmark

Oil burner valves 2/2 - Direct operated

Port size	Orifice (mm)	Flow factors (L/min)		Admissible differential pressure bar			Fluid temp. °C	Seat disc	Reference numbers				Power consumption (W)		Wt. (g)	Dim ref.
				Min	Max					OR						
G		kv	Qmax		DC	AC			Global valve reference	Valve reference no.	Housing	Coil	DC	AC		

Brass body/Pipe mounting

Normally open

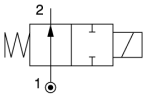

1/8	2.5	3.5	-	0	-	30	160	Ruby	7122KBG1LRT0	**122K9321** [1]	**8760.23**	**483824**	-	19	455	105
	2.5	3.5	-	0	-	30	160	Ruby			**8520.23**	**483824**	-	19	515	
	2.5	3.5	-	0	-	30	140	Ruby	7122KBG1LR00	**122K9363**	**4270**	**481044**	-	14	445	4
	2.5	3.5	-	0	30	30	140	Ruby			**4270**	**486265**	14	14	455	
1/4	2.5	3.5	-	0	-	30	160	Ruby	7122KBG2LRT0	**122K8321** [1]	**8760.23**	**483824**	-	19	435	105
	2.5	3.5	-	0	-	30	160	Ruby			**8520.23**	**483824**	-	19	495	
	2.5	3.5	-	0	-	30	140	Ruby	7122KBG2LR00	**122K8363**	**4270**	**481044**	-	14	425	4
	2.5	3.5	-	0	30	30	140	Ruby			**4270**	**486265**	14	14	435	
	4	6.5	-	0	-	30	160	Ruby	7121KBG2QRT0	**121K6220** [1]	**8520.23**	**483541**	-	20	-	105
	4	6.5	-	0	-	30	160	Ruby			**8760.23**	**483541**	-	20	-	

Notes:

1. TUV approved for oil burners

Parker Lucifer SA
Fluid Control Division Europe
CH-1227 Carouge-Genève

Tel: +45 63 12 83 00 | Email: ps@hymatik.com | www.hymatik.com | Hvidkaervej 27a, DK-5250 Odense SV, Denmark

Oil burner valves 2/2 - Direct operated

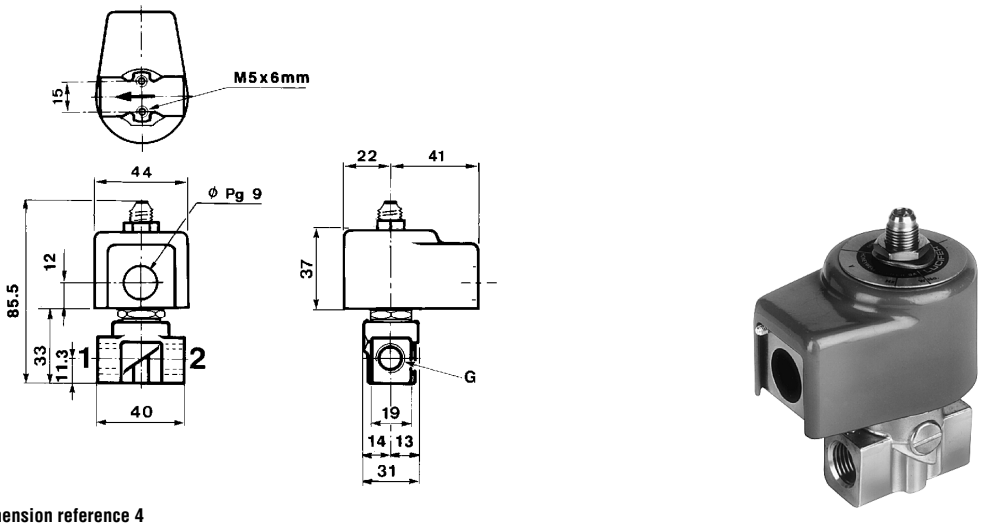

Dimension reference 4

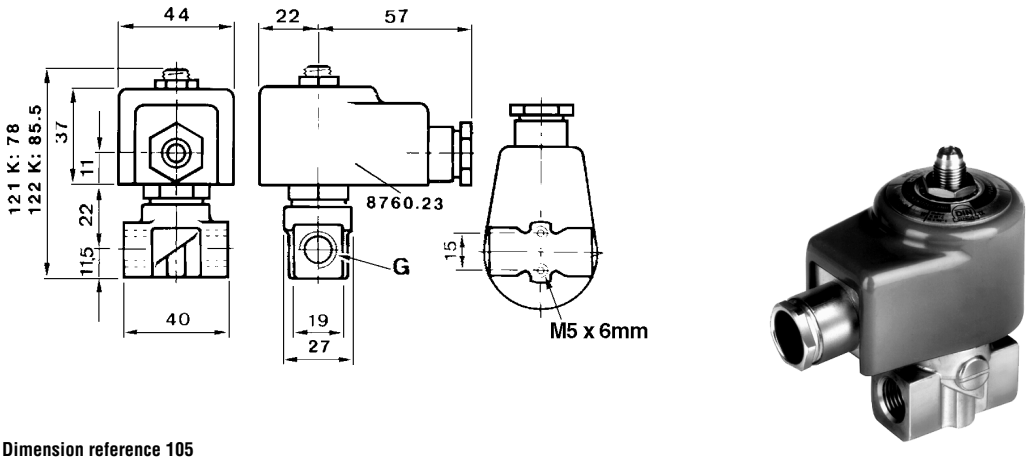

Dimension reference 105

Parker Lucifer SA
Fluid Control Division Europe
CH-1227 Carouge-Genève

Oil burner valves 2/2 - Pilot operated

2/2

Pilot operated

Port size G	Orifice (mm)	Flow factors (L/min) kv	Qmax	Admissible differential pressure bar Min	Max DC	Max AC	Fluid temp. °C	Seat disc	Reference numbers Global valve reference	Valve reference no.	Housing	Coil	Power consumption (W) DC	AC	Wt. (g)	Dim ref.
Brass body/Pipe mounting																
Normally closed																
1/4	8	36	36	0.3 [2]	25	40	100	FKM	7321HBG2SV00	**E321H21** [1]	**2995**	**481865**	9	8	800	9
	8	36	36	0.3	30	40	100	FKM			**4270**	**481000**	8	8	920	
	8	36	36	0.3 [2]	40	40	100	FKM			**4270**	**486265**	14	14	930	
3/8	11	40	40	0.3 [2]	-	30	160	FKM	7321HBG3TVT0	**321H2322** [3]	**8760.23**	**483541**	-	20	1070	104
	11	40	40	0.3 [2]	-	30	160	FKM			**8520.23**	**483541**	-	20	1010	
	11	50	50	0.3 [2]	25	40	100	FKM	7321HBG3TV00	**E321H23** [1]	**2995**	**481865**	9	8	780	9
	11	50	50	0.3 [2]	30	40	120	FKM			**4270**	**481000**	8	8	900	
	11	50	50	0.3 [2]	40	40	140	FKM			**4270**	**486265**	14	14	910	
1/2	14.5	60	60	0.3 [2]	25	40	100	FKM	7321HBG4UV00	**E321H25** [1]	**2995**	**481865**	9	8	740	9
	14.5	60	60	0.3 [2]	30	40	120	FKM			**4270**	**481000**	8	8	860	
	14.5	60	60	0.3 [2]	40	40	140	FKM			**4270**	**486265**	14	14	870	
	15	60	60	0.3	-	30	160	FKM	7321HBG4UVT0	**321H2522** [3]	**8760.23**	**483541**	-	20	870	104
	15	60	60	0.3 [2]	-	30	160	FKM			**8520.23**	**483541**	-	20	870	
Brass body/Pipe mounting																
Normally open																
1/4	8	36	36	0.3 [2]	40	40	100	FKM	7322HBG2SV00	**322H7106** [1]	**2995**	**481865**	9	8	820	9
	8	36	36	0.3 [2]	40	40	120	FKM			**4270**	**481000**	8	8	940	
	8	36	36	0.3 [2]	40	40	140	FKM			**4270**	**486265**	14	14	950	
3/8	11	50	50	0.3 [2]	40	40	100	FKM	7322HBG3TV00	**322H7306** [1]	**2995**	**481865**	9	8	800	9
	11	50	50	0.3 [2]	40	40	100	FKM			**4270**	**481000**	8	8	920	
	11	50	50	0.3 [2]	40	40	140	FKM			**4270**	**486265**	14	14	930	

Table continued on page 110

Notes:

1. Pilot seat discs from ruby (synthetic)
2. Minimum pressure differential = 0.3 bar for opening and 0 bar for closing
3. TUV approved for oil burners

Parker Lucifer SA
Fluid Control Division Europe
CH-1227 Carouge-Genève

Tel: +45 63 12 83 00 | Email: ps@hymatik.com | www.hymatik.com | Hvidkaervej 27a, DK-5250 Odense SV, Denmark

Oil burner valves 2/2 - Pilot operated

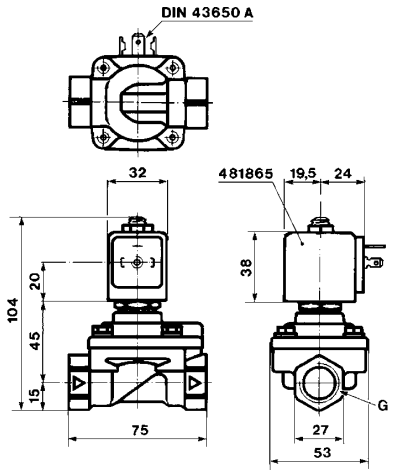



Dimension reference 9

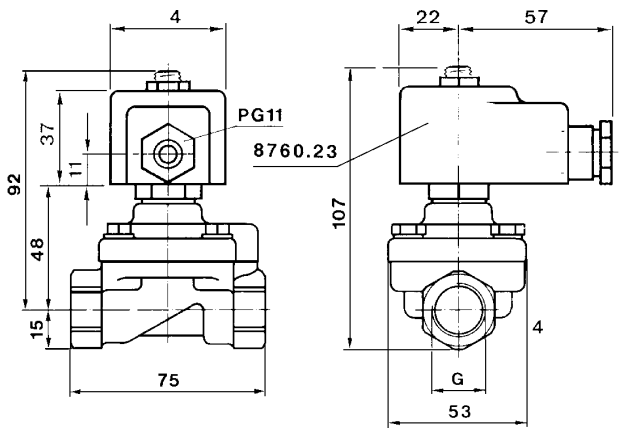



Dimension reference 104

Parker Lucifer SA
Fluid Control Division Europe
CH-1227 Carouge-Genève

Oil burner valves 2/2 - Pilot operated

Port size G	Orifice (mm)	Flow factors (L/min) kv	Flow factors (L/min) Qmax	Admissible differential pressure bar Min	Admissible differential pressure bar Max DC	Admissible differential pressure bar Max AC	Fluid temp. °C	Seat disc	Reference numbers Global valve reference	Reference numbers Valve reference no.	Reference numbers Housing	Reference numbers OR Coil	Power consumption (W) DC	Power consumption (W) AC	Wt. (g)	Dim ref.
Brass body/Pipe mounting																
												Normally open				
1/2	14.5	60	60	0.3 [1]	20	20	100	FKM	7322GBG4UV00	**322G7506**	**2995**	**481865**	9	8	760	9
	14.5	60	60	0.3 [1]	20	20	100	FKM			**4270**	**481000**	8	8	880	
	14.5	60	60	0.3 [1]	40	40	100	FKM	7322HBG4UV00	**322H7506** [2]	**2995**	**481865**	9	8	760	9
	14.5	60	60	0.3 [1]	40	40	120	FKM			**4270**	**481000**	8	8	880	
	14.5	60	60	0.3 [1]	40	40	140	FKM			**4270**	**486265**	14	14	890	
Brass body/Sub-base mounting																
												Normally closed				
SB	14	45	45	0.3 [1]	25	40	100	FKM	7321FBF3TV00	**E321F3202** [2]	**2995**	**481865**	9	8	650	13
	14	45	45	0.3 [1]	30	40	120	FKM			**4270**	**481000**	8	8	770	
	14	45	45	0.3 [1]	40	40	120	FKM			**4270**	**486265**	14	14	780	
Brass body/Sub-base mounting																
												Normally open				
SB	14	45	45	0.3 [1]	40	40	100	FKM	7322FBF3TV00	**322F7206** [2]	**2995**	**481865**	9	8	650	13
	14	45	45	0.3 [1]	40	40	100	FKM			**4270**	**481000**	8	8	770	
	14	45	45	0.3 [1]	40	40	140	FKM			**4270**	**486265**	14	14	780	

Notes:

1. Minimum pressure differential = 0.3 bar for opening and 0 bar for closing
2. Pilot seat discs from ruby (synthetic)

Parker Lucifer SA
Fluid Control Division Europe
CH-1227 Carouge-Genève

Tel: +45 63 12 83 00 | Email: ps@hymatik.com | www.hymatik.com | Hvidkaervej 27a, DK-5250 Odense SV, Denmark

Oil burner valves 2/2 - Pilot operated

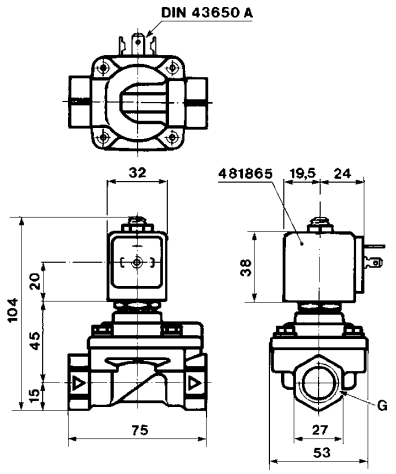



Dimension reference 9

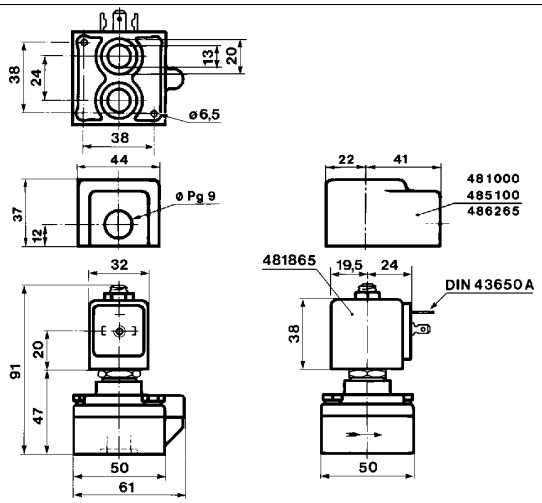



Dimension reference 13

Parker Lucifer SA
Fluid Control Division Europe
CH-1227 Carouge-Genève

Parker Lucifer SA
Fluid Control Division Europe
CH-1227 Carouge-Genève

Dry operator valves for corrosive fluids 2/2

ACTUATION	BODY MATERIAL	FUNCTION	CONNECTION	ORIFICE (MM)	MAX. PRESSURE (BAR)	PAGE
Direct operated	**303 Stainless steel body**	**Normally closed**	1/4 NPT	2 to 4.5	5.0	114
	Teflon body		1/4 NPT	2 to 4.5	5.0	114

Notes:
Direct operated valves: pressure range from 0 to max pressure.

Parker Lucifer SA
Fluid Control Division Europe
CH-1227 Carouge-Genève

Tel: +45 63 12 83 00 | Email: ps@hymatik.com | www.hymatik.com | Hvidkaervej 27a, DK-5250 Odense SV, Denmark

Dry operator valves for corrosive fluids

2/2

Applications

The plunger is physically separated from the fluid by a soft diaphragm, isolating the plunger and the pilot tube from the main corrosive fluid. The fluid is only in contact with the body and the diaphragm.



Direct operated

Port size	Orifice (mm)	Flow factors (L/min)		Admissible differential pressure bar			Fluid temp. °C	Seat disc	Reference numbers				Power consumption (W)		Wt. (g)	Dim ref.
				Min	Max					OR						
NPT		kv	Qmax		DC	AC			Global valve reference	Valve reference no.	Housing	Coil	DC	AC		

303 Stainless steel body/Pipe mounting

Normally closed

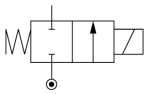

1/4 NPT	2	2.3	-	0	5	5	60	BunaN	71214VN2KN00	-	**2995**	**481865**	9	8	480	113
	2	2.3	-	0	5	5	60	PTFE	71214VN2KT00	-	**2995**	**481865**	9	8	480	113
	3	3.3	-	0	3.5	3.5	60	BunaN	71214VN2MN00	-	**2995**	**481865**	9	8	480	113
	3	3.3	-	0	3.5	3.5	60	PTFE	71214VN2MT00	-	**2995**	**481865**	9	8	480	113
	4	5	-	0	2.5	2.5	60	BunaN	71214VN2QN00	-	**2995**	**481865**	9	8	480	113
	4	5	-	0	2.5	2.5	60	PTFE	71214VN2QT00	-	**2995**	**481865**	9	8	480	113
	4.5	6.7	-	0	1.4	1.4	60	BunaN	71214VN2SN00	-	**2995**	**481865**	9	8	480	113
	4.5	6.7	-	0	1.4	1.4	60	PTFE	71214VN2ST00	-	**2995**	**481865**	9	8	480	113

Teflon body/Pipe mounting

Normally closed

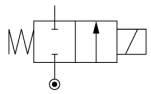

1/4 NPT	2	2.3	-	0	5	5	60	PTFE	71214TN2KT00	-	**2995**	**481865**	9	8	365	110
	3	3.3	-	0	3.5	3.5	60	PTFE	71214TN2MT00	-	**2995**	**481865**	9	8	365	110
	4	5	-	0	2.5	2.5	60	PTFE	71214TN2QT00	-	**2995**	**481865**	9	8	365	110
	4.5	6.7	-	0	1.4	1.4	60	PTFE	71214TN2ST00	-	**2995**	**481865**	9	8	365	110

Parker Lucifer SA
Fluid Control Division Europe
CH-1227 Carouge-Genève

Dry operator valves for corrosive fluids 2/2 - Direct operated

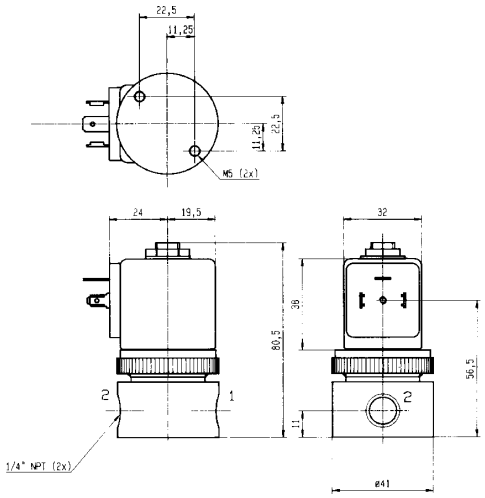

Dimension reference 110

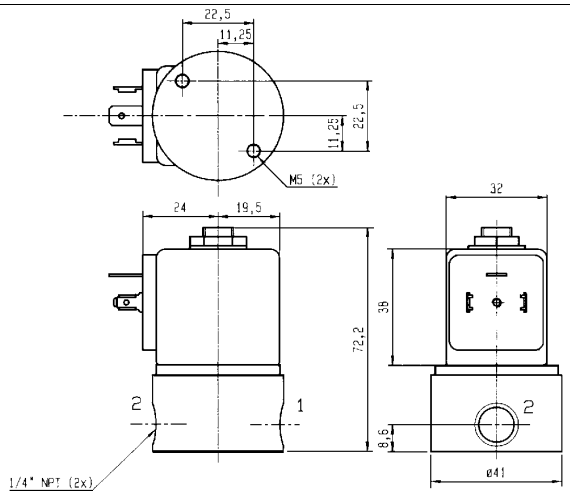

Dimension reference 113

Parker Lucifer SA
Fluid Control Division Europe
CH-1227 Carouge-Genève

Dry operator valves for corrosive fuids

Fluid compatibility chart

	Stainless Steel 18-8, 302, 303, 304, 305	BUNA N (Nitrile)	Teflon*	Noryl		Stainless Steel 18-8, 302, 303, 304, 305	BUNA N (Nitrile)	Teflon*	Noryl
Acetic Acid 8%	S	NR	S	S	Nickle Nitrate	T	T	S	S
Acetone	S	NR	S	NR	Nitrobenzene	NR	NR	S	NR
Acetylene Dry	S	S	S	U	Nitrogen	S	S	S	S
Air Lubricated 120°C (248°F)	S	NR	S	S	Nitrous Oxide	T	S	S	U
Air Lubricated 82°C (180°F)	S	S	S	S	n-Octyl Alcohol	U	T	S	U
Air Unlubricated 120°C (248°F)	S	NR	S	S	Olive Oil	S	S	S	S
Air Unlubricated 82°C (180°F)	S	S	S	S	Oxygen	S	NR	S	S
Alcohol Ethyl (Ethanol)	S	NR	S	F	Ozone	T	NR	S	U
Alcohol Methyl (Methanol)	S	S	S	F	Perchloroethylene	F	NR	S	NR
Ammonia Gas Anhydrous 20	S	S	S	S	n-Propyl Acetobne	U	NR	S	U
Argon	S	S	S	U	Propyl Alcohol	S	T	S	U
Beer	S	S	S	S	Pyridine	S	NR	S	T
Benzene	S	NR	S	NR	Pyrolube	U	NR	U	U
Boric Acid	S	NR	S	S	Quick Silver	U	S	S	U
Citric Acid 10%	S	S	S	S	Red Oil	U	S	S	U
Cod Liver Oil	S	S	S	U	Rust Inhibitors	U	S	U	U
Coffee	S	S	S	U	Shellac	S	S	S	U
Diesel Fuel	S	T	S	NR	Silicone Oil	S	S	S	S
Ethylene Glycol (Antifreeze)	S	S	S	S	Sodium Phosphates	T	S	S	S
Freon 12	S	S	S	NR	Steam 140°C (298°F)	S	NR	S	S
Freon 22	S	NR	S	NR	Steam 180°C (356°F)	S	NR	S	T
Fuel Oil	S	T	S	S	Stoddard Solvent	S	S	S	NR
Gasoline Leaded	S	S	S	NR	Sucrose Solution	S	S	S	S
Gasoline Unleaded	S	NR	S	NR	Sulfur	T	NR	S	S
Helium	S	S	S	S	Sulfur Hexaflouride	S	NR	S	U
Hydraulic Fluids - Fire Resistant Cellulube Phosphate Ester	S	NR	S	U	Toluene	S	NR	S	NR
					Trichloroethylene	T	NR	S	NR
Pydraul	S	NR	S	U	Trimethylpentane	U	S	S	U
Skydrol	S	NR	S	NR	Trisodium Phosphate	T	F	S	S
Petroleum	S	S	S	NR	Turpentine	S	S	S	S
Jet Fuel	S	T	-	NR	Urea	S	T	S	S
Kerosene	S	S	S	NR	Varnish	S	T	S	U
Ketones	T	NR	S	NR	Vegetable Oil	S	S	S	U
Lard (Animal Fat)	S	S	S	U	Vinegar	T	T	S	S
Lead Acetate	NR	NR	S	F	Water Boiler Feed	S	S	S	U
Linseed Oil	S	S	S	S	Water Deionized Distilled	S	T	S	S
Lime & Water	NR	S	S	U	Water Fresh <82°C (180°F)	S	S	S	S
Lubricating Oil	S	S	S	T	Water Fresh <100°C (212°F)	S	NR	S	S
Methane	S	S	S	U	Water Return Condensate	S	S	S	U
Methanol Alcohol-Methyl	S	S	S	T	Water Sea/Salt	T	S	S	S
Methyl Ethyl Ketone (MEK)	F	NR	S	NR	Whiskey	S	S	S	S
Mineral Spirits	S	S	S	T	Wine	S	S	S	S
Motor Oil	S	S	S	S	Xylene	S	NR	S	NR
Naptha	S	S	S	NR	Zinc Chloride	NR	S	S	S
Natural Gas	S	S	S	U	Zinc Sulfate	T	T	S	S

Notes
The data shoud be used as a guide, and not as a final recommendation.
S = Satisfactory; T = Test to Verify, F = fair; U = No Data Available, NR = Not Recommended Unless Otherwise Stated,
Media are at 100% Concentration and at Room Temperture.

Parker Lucifer SA
Fluid Control Division Europe
CH-1227 Carouge-Genève

Fast switching valves 2/2

ACTUATION	BODY MATERIAL	FUNCTION	CONNECTION	ORIFICE (MM)	MAX. PRESSURE (BAR)	PAGE
Magnalift	**Brass body**	**Normally closed**	3/8	8	7.0	118

Notes:
Magnalift valves: pressure range from 0 to max pressure.

Parker Lucifer SA
Fluid Control Division Europe
CH-1227 Carouge-Genève

Fast switching valves

2/2

Applications

- Where extremely short response times and/or dry air service are required
- Textile weaving machines
- Printing machines
- Sorting machines
- Banknote counting machines.

Magnalift

Port size	Orifice (mm)	Flow factors (L/min)		Admissible differential pressure bar			Fluid temp. °C	Seat disc	Reference numbers				Power consumption (W)		Wt. (g)	Dim ref.
				Min	Max							OR				
G		kv	Qmax		DC	AC			Global valve reference	Valve reference no.	Housing	Coil	DC	AC		
3/8	8	-	40	0	7	-	-	PUR	-	221J3301E [1]	**2995.60**	**483816**	14	-	360	5
	8	-	40	0	7	-	-	PUR			**4270.60**	**486265**	14	-	490	

Normally closed

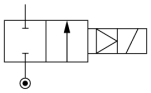

Brass body/Pipe mounting

Notes:

1. Fast response and long life

Parker Lucifer SA
Fluid Control Division Europe
CH-1227 Carouge-Genève

Tel: +45 63 12 83 00 | Email: ps@hymatik.com | www.hymatik.com | Hvidkaervej 27a, DK-5250 Odense SV, Denmark

Fast switching valves 2/2 - Magnalift

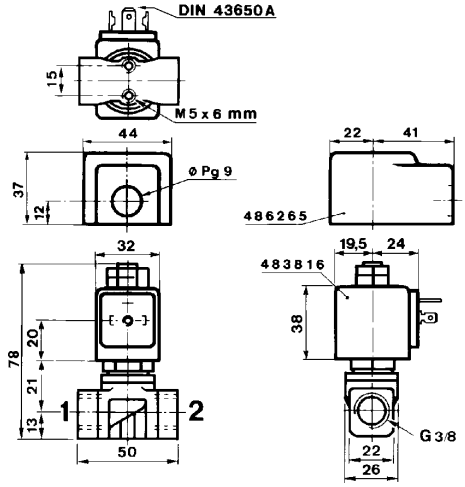



Dimension reference 5

Parker Lucifer SA
Fluid Control Division Europe
CH-1227 Carouge-Genève

Parker Lucifer SA
Fluid Control Division Europe
CH-1227 Carouge-Genève

3-way valves

	Page
General appplication valves for dry or lubricated air neutral gases and liquids	123
Miniature valves (3-way direct operated)	161
Valves for hydraulic oil and neutral liquids (max. 75 bar)	175
High corrosion resistant valves (Stainless Steel)	181

Applications

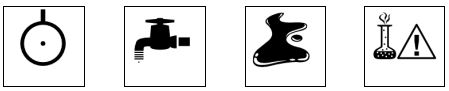

AIR | WATER | OIL | CORROSION RESISTANT

Parker Lucifer SA
Fluid Control Division Europe
CH-1227 Carouge-Genève

Tel: +45 63 12 83 00 | Email: ps@hymatik.com | www.hymatik.com | Hvidkaervej 27a, DK-5250 Odense SV, Denmark

Parker Lucifer SA
Fluid Control Division Europe
CH-1227 Carouge-Genève

General application valves for dry or lubricated air, neutral gases and liquids 3/2

ACTUATION	BODY MATERIAL	FUNCTION	CONNECTION	ORIFICE (MM)	MAX. PRESSURE (BAR)	PAGE
Direct operated	Brass body	Normally closed	1/8	1.2 to 2.5	15.0	124
			1/4	1 to 4.5	30.0	126
			SB	1 to 2.5	15.0	136
		Normally open	1/4	1.5 to 3	16.0	132
			SB	1.5 to 2.5	16.0	144
		Universal	1/8	1.5 to 2.5	10.0	134
			1/4	1.5 to 3	10.0	134
			SB	1.5 to 2.5	10.0	144
		Magnetic latch control	1/4	1.5 to 2.5	16.0	136
	Delrin body	Normally closed	SB	2	10.0	148
Pilot operated	Anod. aluminium body	Normally closed	1/4	6.5 to 8	40.0	150
			1/2	14 to 15	15.0	152
		Normally open	1/4	8	40.0	152
			1/2	14	15.0	154

Notes:
Direct operated and magnalift valves: pressure range from 0 to max pressure.
Pilot operated valves: pressure range from 0.3 to 0.5 bar to max. pressure (refer to tables).

Parker Lucifer SA
Fluid Control Division Europe
CH-1227 Carouge-Genève

Tel: +45 63 12 83 00 | Email: ps@hymatik.com | www.hymatik.com | Hvidkaervej 27a, DK-5250 Odense SV, Denmark

General application valves for dry or lubricated air, neutral gases and liquids

3/2

Direct operated

Port size	Orifice (mm)	Flow factors (L/min)			Admissible differential pressure bar			Fluid temp. °C			Seat disc	Reference numbers				Power consumption (W)		Wt. (g)	El. Part Group *	Dim ref.
		Liquids		Gases	Min	Max		Gas	Liquid	Oil		Global valve reference	Valve reference no.	Housing	Coil	DC	AC			
G		kv	Qmax	Qn		DC	AC													

Brass body/Pipe mounting

Normally closed

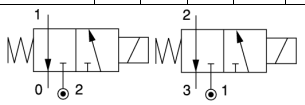

E, K, V Series T, M Series

1/8	1.2	0.7	2.2	50	0	10	10	75	75	75	FKM	-	**131M15**	**8993**	**488980**	2.5	2	150	1	14
	(1.5)	(0.9)	(2.2)	(70)	0	10	10	75	75	75	FKM			**8993**	**488980**	2.5	2	150	1	
	1.5	1.1	2.4	70	0	7	7	75	75	75	FKM	-	**131M14**	**8993**	**488980**	2.5	2	150	1	14
	1.5	1.5	5.8	80	0	15	15	100	100	100	FKM	7131KBG1GV00	**E131K14**	**2995**	**481865**	9	8	325	2	17
	1.5	1.5	5.8	80	0	15	15	120	120	120	FKM			**4270**	**481000**	8	8	445	2	
	2	2	6.5	140	0	-	10	75	75	75	FKM	7131ZBG1JV00	**-**	**2995**	**481865**	9	8	270	2	7894
	2	2	6.5	140	0	10	10	75	75	75	FKM			**4270**	**481000**	8	8	390	2	
	2	2	6.5	140	0	10	10	75	75	75	FKM			**2995**	**482730**	7	6	270	2	
	2	2.5	8	140	0	10	10	100	100	100	FKM	7131KBG1JVM0	**131K1650** [1]	**2995**	**481865**	9	8	310	2	17
	(2.5)	(3.5)	(8.5)	(220)	0	10	10	100	100	100	FKM			**2995**	**481865**	9	8	310	2	
	2	2.5	8	140	0	10	10	120	120	120	FKM			**4270**	**481000**	8	8	430	2	
	(2.5)	(3.5)	(8.5)	(220)	0	10	10	120	120	120	FKM			**4270**	**481000**	8	8	430	2	
	2	2.5	8	140	0	10	10	100	100	100	FKM	7131KBG1JV00	**131K16**	**2995**	**481865**	9	8	310	2	17
	(2.5)	(3.5)	(8.5)	(220)	0	10	10	100	100	100	FKM			**2995**	**481865**	9	8	310	2	
	2	2.5	8	140	0	10	10	120	120	120	FKM			**4270**	**481000**	8	8	430	2	
	(2.5)	(3.5)	(8.5)	(220)	0	10	10	120	120	120	FKM			**4270**	**481000**	8	8	430	2	
	2.5	3.5	8.5	220	0	7	7	100	100	100	FKM	7131KBG1LV00	**E131K13**	**2995**	**481865**	9	8	325	2	17
	2.5	3.5	8.5	220	0	7	7	120	120	120	FKM			**4270**	**481000**	8	8	445	2	

Table continued on page 126

Notes:

* See Electrical Parts Group table at end of section

1. Manual override standard

Values shown within brackets are valid for exhaust port only.

Parker Lucifer SA
Fluid Control Division Europe
CH-1227 Carouge-Genève

Tel: +45 63 12 83 00 | Email: ps@hymatik.com | www.hymatik.com | Hvidkaervej 27a, DK-5250 Odense SV, Denmark

General application valves 3/2 - Direct operated

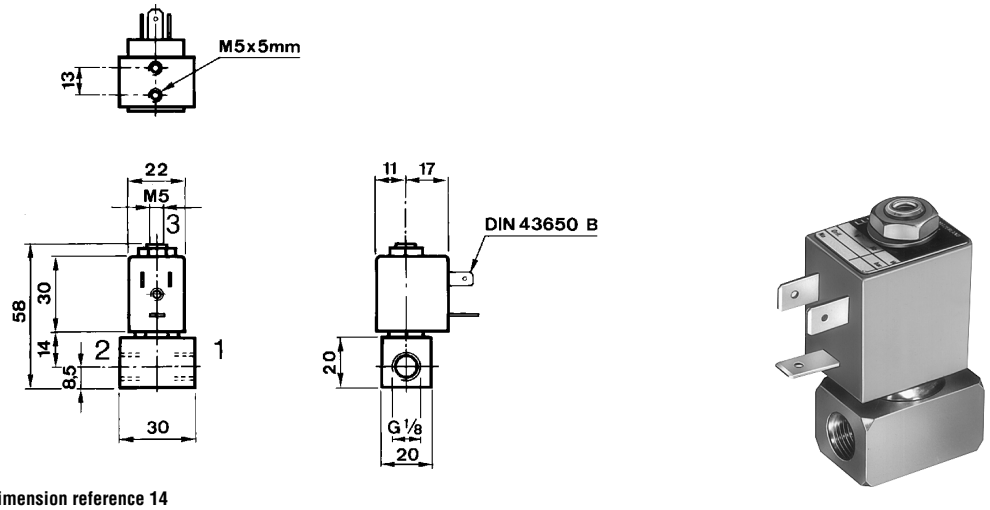

Dimension reference 14

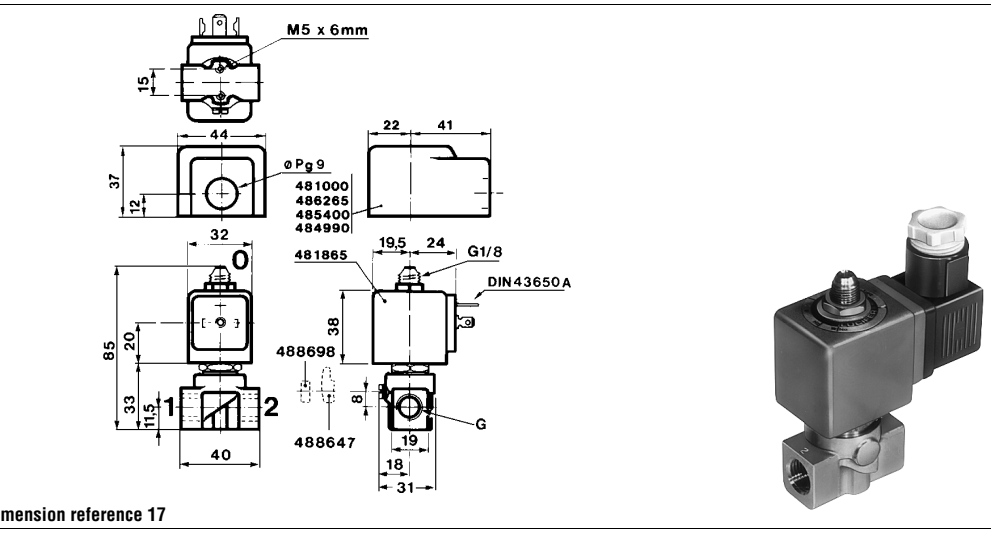

Dimension reference 17

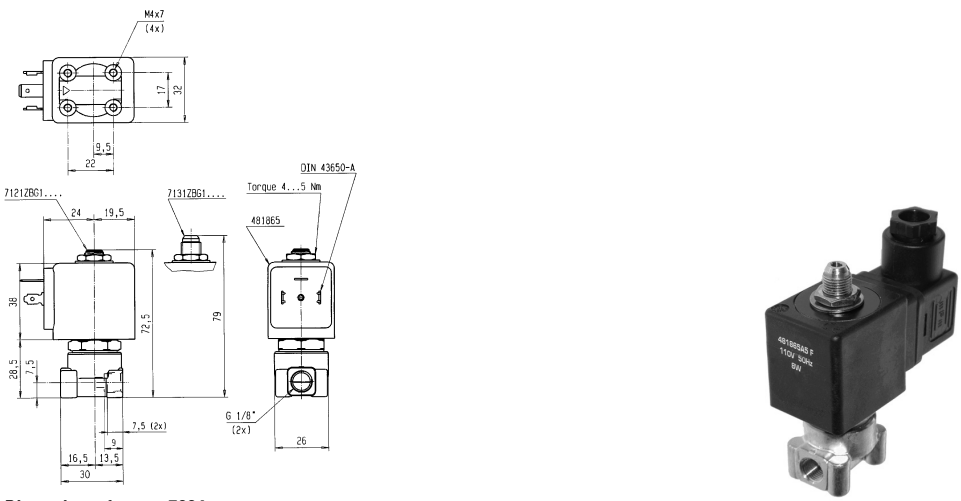

Dimension reference 7894

Parker Lucifer SA
Fluid Control Division Europe
CH-1227 Carouge-Genève

General application valves 3/2 - Direct operated

Port size	Orifice (mm)	Flow factors (L/min)			Admissible differential pressure bar			Fluid temp. °C			Seat disc	Reference numbers				Power consumption (W)		Wt. (g)	El. Part Group *	Dim ref.
		Liquids		Gases	Min	Max		Gas	Liquid	Oil		Global valve reference	Valve reference no.	Housing	Coil	DC	AC			
G		kv	Qmax	Qn		DC	AC													

Brass body/Pipe mounting

Normally closed

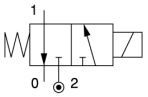

1/4	1	0.6	-	38	0	10	-	75	75	75	FKM	7131KBG2CV90	**131K0490**	-	**483580.01** [1]	0.4	-	285	7	77
	1.2	0.8	4.5	50	0	-	30	130	130	130	Ruby	7131KBG2ERM0	**E131K6450** [2]	**4270**	**481000**	-	8	430	2	17
	(1.5)	(1.5)	(9)	(80)	0	-	30	130	130	130	Ruby			**4270**	**481000**	-	8	430	2	
	1.2	0.8	4.5	50	0	30	-	140	140	140	Ruby			**4270**	**486265**	14	-	430	2	
	(1.5)	(1.5)	(9)	(80)	0	30	-	140	140	140	Ruby			**4270**	**486265**	14	-	430	2	
	1.2	0.8	4.5	50	0	-	30	130	130	130	Ruby	7131KBG2ER00	**E131K64**	**4270**	**481000**	-	8	430	2	17
	(1.5)	(1.5)	(9)	(80)	0	-	30	130	130	130	Ruby			**4270**	**481000**	-	8	430	2	
	1.2	0.8	4.5	50	0	30	-	140	140	140	Ruby			**4270**	**486265**	14	-	440	2	
	(1.5)	(1.5)	(9)	(80)	0	30	-	140	140	140	Ruby			**4270**	**486265**	14	-	440	2	
	1.5	1.5	4	80	0	7	-	75	75	75	FKM	7131KBG2GVL5	**131K0480**	**2995**	**482740**	1.6	-	310	6	17
	1.5	1.5	6	80	0	15	15	100	100	100	FKM	7131KBG2GVM0	**E131K0450** [2]	**2995**	**481865**	9	8	310	2	17
	1.5	1.5	6	80	0	15	15	120	120	120	FKM			**4270**	**481000**	8	8	430	2	
	1.5	1.5	6	80	0	15	15	100	100	100	FKM	7131KBG2GV00	**E131K04**	**2995**	**481865**	9	8	310	2	17
	1.5	1.5	6	80	0	15	15	120	120	120	FKM			**4270**	**481000**	8	8	430	2	
	2	2.5	8	140	0	10	10	75	75	75	FKM	7131TBG2JVM0	**131T2301** [2]	**2995**	**481865**	9	8	400	2	18
	(3)	(4.5)	(9)	(355)	0	10	10	75	75	75	FKM			**2995**	**481865**	9	8	400	2	
	2	2.5	8	140	0	10	10	75	75	75	FKM			**4270**	**481000**	8	8	520	2	
	(3)	(4.5)	(9)	(355)	0	10	10	75	75	75	FKM			**4270**	**481000**	8	8	520	2	
	2	2.5	8	140	0	10	10	75	75	75	FKM	7131TBG2JV00	**131T23**	**2995**	**481865**	9	8	400	2	18
	(3)	(4.5)	(9)	(355)	0	10	10	75	75	75	FKM			**2995**	**481865**	9	8	400	2	
	2	2.5	8	140	0	10	10	75	75	75	FKM			**4270**	**481000**	8	8	520	2	
	(3)	(4.5)	(9)	(355)	0	10	10	75	75	75	FKM			**4270**	**481000**	8	8	520	2	
	2	2.5	8	140	0	10	10	100	100	100	FKM	7131KBG2JVM0	**E131K0650** [2]	**2995**	**481865**	9	8	310	2	17
	(2.5)	(3.5)	(8.5)	(220)	0	10	10	100	100	100	FKM			**2995**	**481865**	9	8	310	2	
	2	2.5	8	140	0	10	10	120	120	120	FKM			**4270**	**481000**	8	8	430	2	
	(2.5)	(3.5)	(8.5)	(220)	0	10	10	120	120	120	FKM			**4270**	**481000**	8	8	430	2	
	2	2.5	8	140	0	10	10	100	100	100	FKM	7131KBG2JV00	**E131K06**	**2995**	**481865**	9	8	310	2	17
	(2.5)	(3.5)	(8.5)	(220)	0	10	10	100	100	100	FKM			**2995**	**481865**	9	8	310	2	
	2	2.5	8	140	0	10	10	120	120	120	FKM			**4270**	**481000**	8	8	430	2	
	(2.5)	(3.5)	(8.5)	(220)	0	10	10	120	120	120	FKM			**4270**	**481000**	8	8	430	2	

Table continued on page 128

Notes:

* See Electrical Parts Group table at end of section

1. Other coil-housing available: 488650.01, 488660.01, 4888670.01 (refer to electrical parts at end of this section)
2. Manual override standard

Values shown within brackets are valid for exhaust port only.

Parker Lucifer SA
Fluid Control Division Europe
CH-1227 Carouge-Genève

Tel: +45 63 12 83 00 | Email: ps@hymatik.com | www.hymatik.com | Hvidkaervej 27a, DK-5250 Odense SV, Denmark

General application valves 3/2 - Direct operated

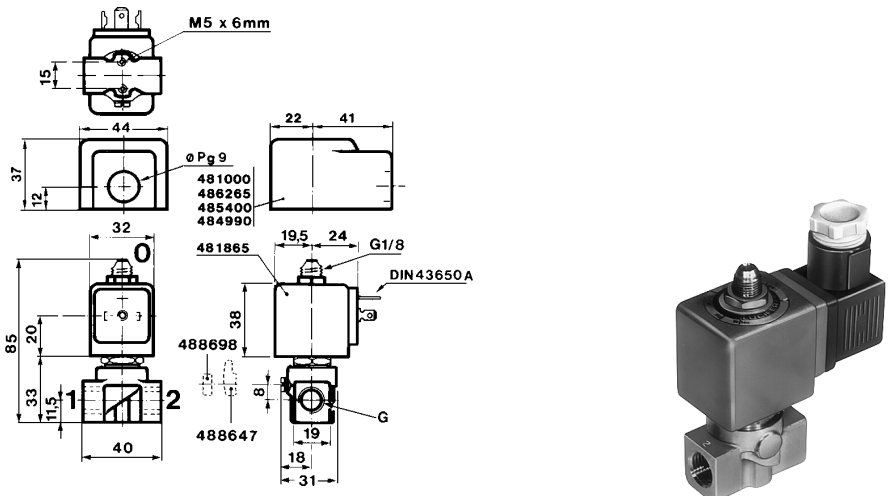

Dimension reference 17

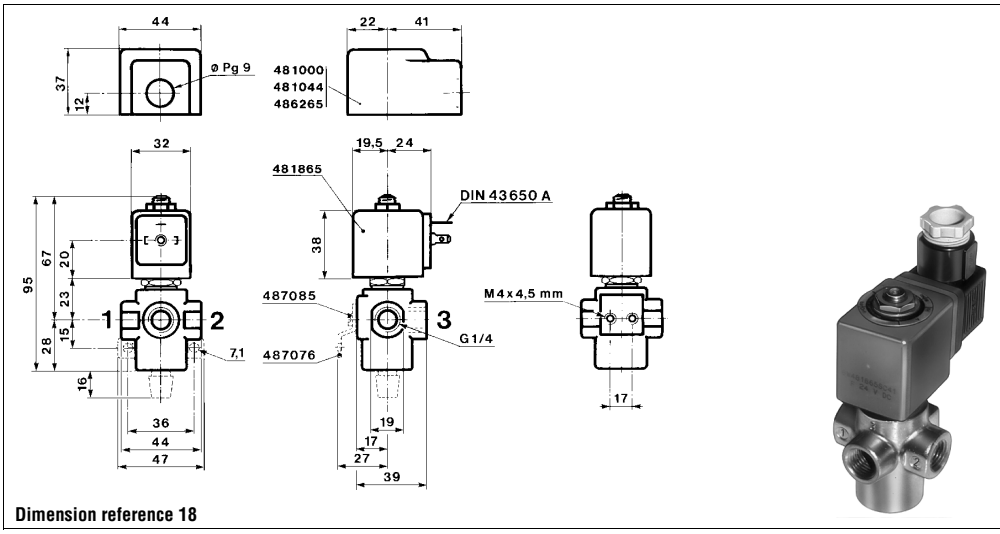

Dimension reference 18

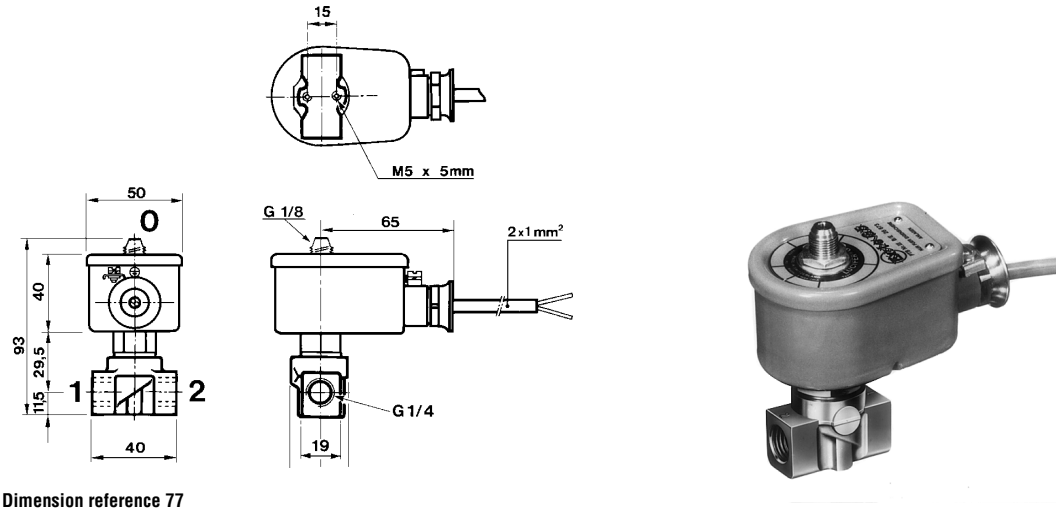

Dimension reference 77

Parker Lucifer SA
Fluid Control Division Europe
CH-1227 Carouge-Genève

General application valves 3/2 - Direct operated

Port size	Orifice (mm)	Flow factors (L/min)			Admissible differential pressure bar			Fluid temp. °C			Seat disc	Reference numbers				Power consumption (W)		Wt. (g)	El. Part Group *	Dim ref.
		Liquids		Gases	Min	Max		Gas	Liquid	Oil		Global valve reference	Valve reference no.	Housing	Coil	DC	AC			
G		kv	Qmax	Qn		DC	AC													

Brass body/Pipe mounting

Normally closed

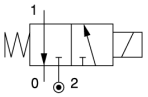

1/4	2	2.5	8	140	0	10	10	80	80	80	PUR	7131KBG2JP1D	**E131K06081D** [1]	-	**483250**	8	8	1255	5	3845
	2.5	3.5	8.5	220	0	7	7	75	75	75	FKM	7131TBG2LVM0	**131T2901** [2]	**2995**	**481865**	9	8	400	2	18
	(3.5)	(5.5)	(9.5)	(400)	0	7	7	75	75	75	FKM			**2995**	**481865**	9	8	400	2	
	2.5	5.5	9.5	400	0	7	7	75	75	75	FKM			**4270**	**481000**	8	8	520	2	
	(3.5)	(3.5)	(8.5)	(220)	0	7	7	75	75	75	FKM			**4270**	**481000**	8	8	520	2	
	2.5	3.5	8.5	220	0	7	7	75	75	75	FKM	7131TBG2LV00	**131T29**	**2995**	**481865**	9	8	400	2	18
	(3.5)	(5.5)	(9.5)	(400)	0	7	7	75	75	75	FKM			**2995**	**481865**	9	8	400	2	
	2.5	3.5	8.5	220	0	7	7	75	75	75	FKM			**4270**	**481000**	8	8	520	2	
	(3.5)	(5.5)	(9.5)	(400)	0	7	7	75	75	75	FKM			**4270**	**481000**	8	8	520	2	
	2.5	3.5	8.5	220	0	7	7	100	100	100	FKM	7131KBG2LVM0	**E131K0350** [2]	**2995**	**481865**	9	8	310	2	17
	2.5	3.5	8.5	220	0	7	7	120	120	120	FKM			**4270**	**481000**	8	8	430	2	
	2.5	3.5	8.5	220	0	7	7	100	100	100	FKM	7131KBG2LV00	**E131K03**	**2995**	**481865**	9	8	310	2	17
	2.5	3.5	8.5	220	0	7	7	120	120	120	FKM			**4270**	**481000**	8	8	430	2	

Table continued on page 130

Notes:

* See Electrical Parts Group table at end of section

1. Operates with low temperatures down to -40 deg. C
2. Manual override standard

Values shown within brackets are valid for exhaust port only.

Parker Lucifer SA
Fluid Control Division Europe
CH-1227 Carouge-Genève

Tel: +45 63 12 83 00 | Email: ps@hymatik.com | www.hymatik.com | Hvidkaervej 27a, DK-5250 Odense SV, Denmark

General application valves 3/2 - Direct operated

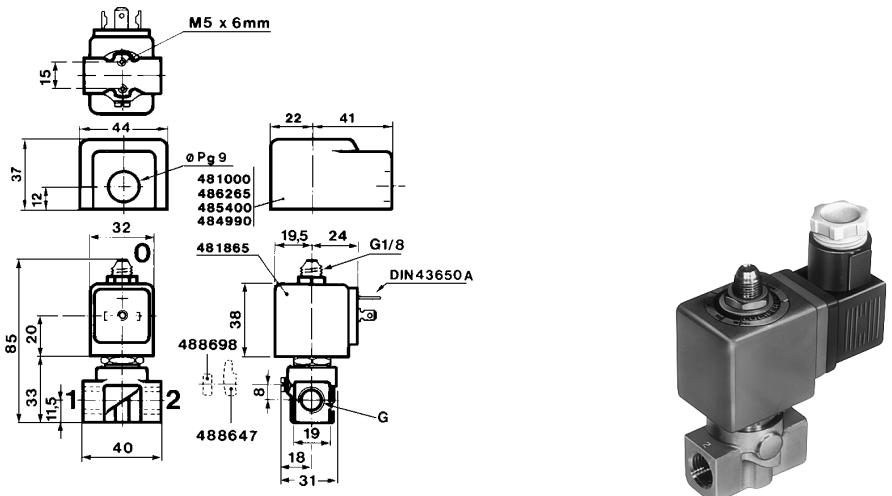

Dimension reference 17

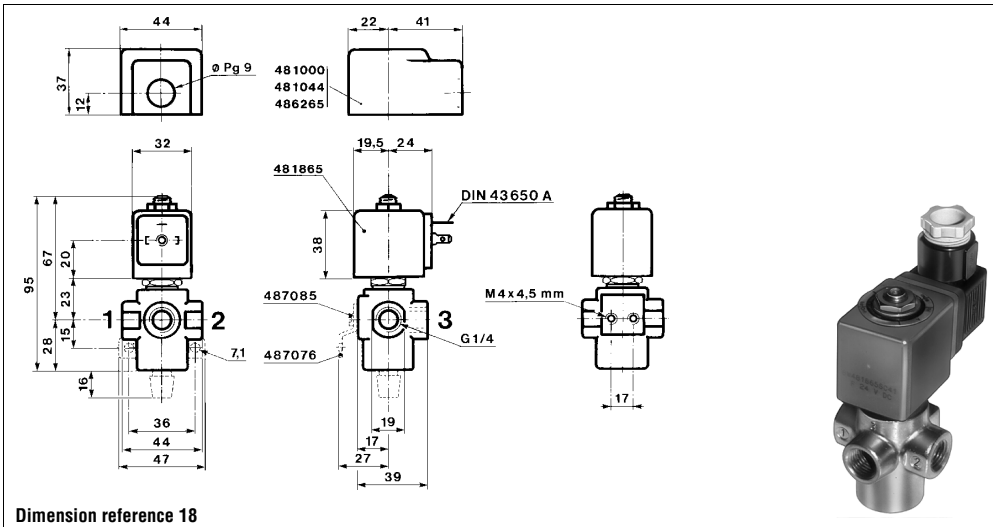

Dimension reference 18

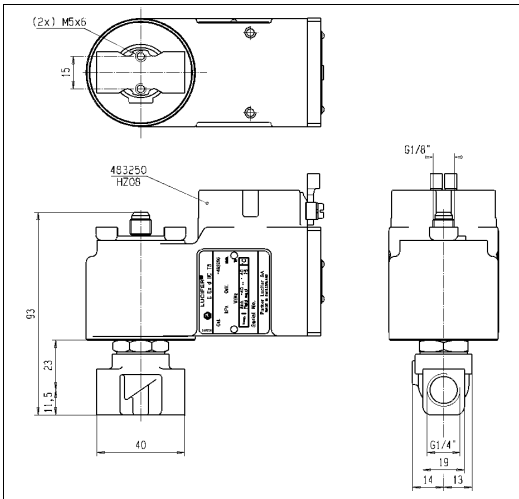

Dimension reference 3845

Parker Lucifer SA
Fluid Control Division Europe
CH-1227 Carouge-Genève

Tel: +45 63 12 83 00 | Email: ps@hymatik.com | www.hymatik.com | Hvidkaervej 27a, DK-5250 Odense SV, Denmark

General application valves 3/2 - Direct operated

Brass body/Pipe mounting

Normally closed

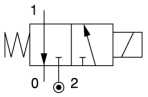

Port size G	Orifice (mm)	Flow factors (L/min) Liquids kv	Liquids Qmax	Gases Qn	Admissible differential pressure bar Min	Max DC	Max AC	Fluid temp. °C Gas	Liquid	Oil	Seat disc	Reference numbers Global valve reference	Valve reference no.	Housing	Coil	Power consumption (W) DC	AC	Wt. (g)	El. Part Group *	Dim ref.
1/4	2.5	2.7	7.1	220	0.1	7	7	75	75	75	NBR	7131EBG2LN00	**E131E03**	**2995**	**481865**	9	8	650	2	19
	(6)	(15)	(12.5)	(1100)	0.1	7	7	75	75	75	NBR			**2995**	**481865**	9	8	650	2	
	2.5	2.7	7.1	220	0.1	7	7	75	75	75	NBR			**4270**	**481000**	8	8	770	2	
	(6)	(15)	(12.5)	(1100)	0.1	7	7	75	75	75	NBR			**4270**	**481000**	8	8	770	2	
	2.5	3.5	9.5	220	0	7	7	100	100	100	Ruby	7131KBG2LRM0	**E131K6350** [1]	**2995**	**481865**	9	8	310	2	17
	2.5	3.5	9.5	220	0	7	7	130	130	130	Ruby			**4270**	**481000**	8	8	430	2	
	2.5	3.5	9.5	220	0	7	7	100	100	100	Ruby	7131KBG2LR00	**E131K63**	**2995**	**481865**	9	8	310	2	17
	2.5	3.5	9.5	220	0	7	7	130	130	130	Ruby			**4270**	**481000**	8	8	430	2	
	2.5	3.5	8.5	220	0	7	7	75	75	75	PUR	7131KBG2LP1D	**E131K03081D** [2]	**-**	**483250**	8	8	1255	5	3845
	2.5	3.5	8.5	220	0	7	7	75	75	75	PUR	7131KBG2LP00	**E131K0308** [2]	**2995**	**481865**	9	8	180	2	17
	2.5	3.5	8.5	220	0	7	7	75	75	75	PUR			**4270**	**481000**	8	8	180	2	
	2.5	3.5	8.5	220	0	7	7	75	75	75	PUR	7131KBG2LPM0	**E131K0358** [1]	**2995**	**481865** [2]	9	8	180	2	17
	2.5	3.5	8.5	220	0	7	7	75	75	75	PUR			**4270**	**481000** [2]	8	8	180	2	

Table continued on page 132

Notes:

* See Electrical Parts Group table at end of section

1. Manual override standard
2. Operates with low temperatures down to -40 deg. C

Values shown within brackets are valid for exhaust port only.

Parker Lucifer SA
Fluid Control Division Europe
CH-1227 Carouge-Genève

Tel: +45 63 12 83 00 | Email: ps@hymatik.com | www.hymatik.com | Hvidkaervej 27a, DK-5250 Odense SV, Denmark

General application valves 3/2 - Direct operated

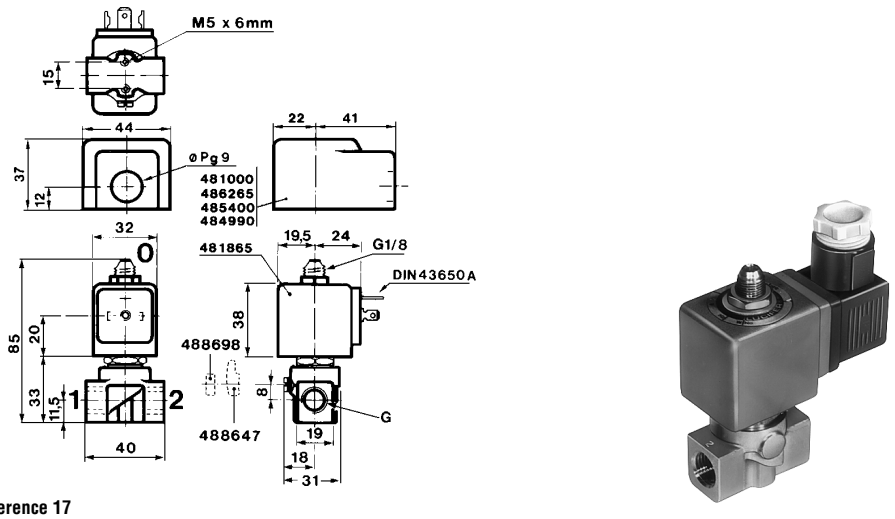

Dimension reference 17

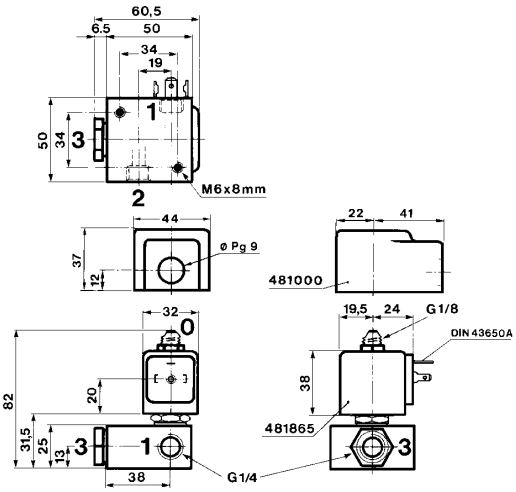



Dimension reference 19

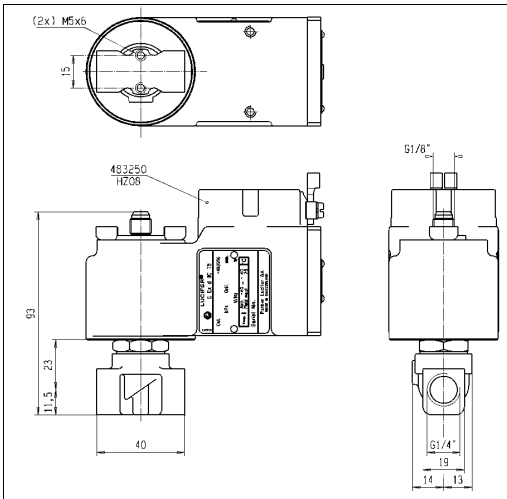

Dimension reference 3845

Parker Lucifer SA
Fluid Control Division Europe
CH-1227 Carouge-Genève

General application valves 3/2 - Direct operated

Brass body/Pipe mounting

Normally closed

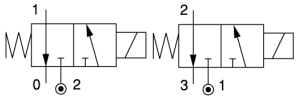

E, K, V Series T, M Series

Port size G	Orifice (mm)	Flow factors (L/min) Liquids kv	Liquids Qmax	Gases Qn	Admissible differential pressure bar Min	Max DC	Max AC	Fluid temp. °C Gas	Liquid	Oil	Seat disc	Reference numbers Global valve reference	Valve reference no.	OR Housing	Coil	Power consumption (W) DC	AC	Wt. (g)	El. Part Group *	Dim ref.
1/4	3	4.5	9	355	0	-	10	75	75	75	FKM	7131TBG2NVA0	**131T22**	**4270**	**481044**	-	14	520		18
	(4)	(6)	(10.5)	(450)	0	-	10	75	75	75	FKM			**4270**	**481044**	-	14	520		
	3	6	10.5	450	0	-	10	75	75	75	FKM			**2995**	**492425**	-	14	400		
	(4)	(4.5)	(9)	(355)	0	-	10	75	75	75	FKM			**2995**	**492425**	-	14	400		
	4.5	7	10.5	500	0	2	2	75	75	75	FKM	7131TBG2RVM0	**131T2101** [1]	**2995**	**481865**	9	8	400	2	18
	(6)	(9)	(12.5)	(710)	0	2	2	75	75	75	FKM			**2995**	**481865**	9	8	400	2	
	4.5	7	10.5	500	0	2	2	75	75	75	FKM			**4270**	**481000**	8	8	520	2	
	(6)	(9)	(12.5)	(710)	0	2	2	75	75	75	FKM			**4270**	**481000**	8	8	520	2	
	4.5	7	10.5	500	0	2	2	75	75	75	FKM	7131TBG2RV00	**131T21**	**2995**	**481865**	9	8	400	2	18
	(6)	(9)	(12.5)	(710)	0	2	2	75	75	75	FKM			**2995**	**481865**	9	8	400	2	
	4.5	7	10.5	500	0	2	2	75	75	75	FKM			**4270**	**481000**	8	8	520	2	
	(6)	(9)	(12.5)	(710)	0	2	2	75	75	75	FKM			**4270**	**481000**	8	8	520	2	

Brass body/Pipe mounting

Normally open

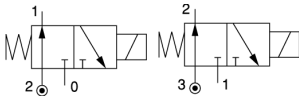

E, K, V Series T, M Series

Port size G	Orifice (mm)	Flow factors (L/min) Liquids kv	Liquids Qmax	Gases Qn	Admissible differential pressure bar Min	Max DC	Max AC	Fluid temp. °C Gas	Liquid	Oil	Seat disc	Reference numbers Global valve reference	Valve reference no.	OR Housing	Coil	Power consumption (W) DC	AC	Wt. (g)	El. Part Group *	Dim ref.
1/4	1.5	1.4	6	80	0	16	16	100	100	100	FKM	7132KBG2GV00	**132K04**	**2995**	**481865**	9	8	310	2	17
	1.5	1.4	6	80	0	16	16	120	120	120	FKM			**4270**	**481000**	8	8	430	2	
	2	1.8	6	125	0	10	10	100	100	100	FKM	7132KBG2JV00	**132K06**	**2995**	**481865**	9	8	310	2	17
	2	1.8	6	125	0	10	10	120	120	120	FKM			**4270**	**481000**	8	8	430	2	
	2	2.5	8	140	0	5	10	75	75	75	FKM	7132TBG2JVM0	**132T2301** [1]	**2995**	**481865**	9	8	300		18
	(3)	(4.5)	(9)	(355)	0	5	10	75	75	75	FKM			**2995**	**481865**	9	8	300		
	2	2.5	8	140	0	5	10	75	75	75	FKM			**4270**	**481000**	8	8	420		
	(3)	(4.5)	(9)	(355)	0	5	10	75	75	75	FKM			**4270**	**481000**	8	8	420		
	2	2.5	8	140	0	10	-	75	75	75	FKM			**4270**	**486265**	14	14	430		
	(3)	(4.5)	(9)	(355)	0	10	-	75	75	75	FKM			**4270**	**486265**	14	14	430		
	2	2.5	8	140	0	5	10	75	75	75	FKM	7132TBG2JV00	**132T23**	**2995**	**481865**	9	8	300		18
	(3)	(4.5)	(9)	(355)	0	5	10	75	75	75	FKM			**2995**	**481865**	9	8	300		
	2	2.5	8	140	0	5	10	75	75	75	FKM			**4270**	**481000**	8	8	420		
	(3)	(4.5)	(9)	(355)	0	5	10	75	75	75	FKM			**4270**	**481000**	8	8	420		
	2	2.5	8	140	0	10	-	75	75	75	FKM			**4270**	**486265**	14	-	430		
	(3)	(4.5)	(9)	(355)	0	10	-	75	75	75	FKM			**4270**	**486265**	14	-	430		
	2.5	2.2	8.5	160	0	7	7	100	100	100	FKM	7132KBG2LV00	**132K03**	**2995**	**481865**	9	8	310	2	17
	2.5	2.2	8.5	160	0	7	7	120	120	120	FKM			**4270**	**481000**	8	8	430	2	
	2.5	3.5	8.5	220	0	3.5	7	75	75	75	FKM	7132TBG2LV00	**132T29**	**2995**	**481865**	9	8	300		18
	(3.5)	(5.5)	(9.5)	(400)	0	3.5	7	75	75	75	FKM			**2995**	**481865**	9	8	300		
	2.5	3.5	8.5	220	0	3.5	7	75	75	75	FKM			**4270**	**481000**	8	8	420		
	(3.5)	(5.5)	(9.5)	(400)	0	3.5	7	75	75	75	FKM			**4270**	**481000**	8	8	420		
	2.5	3.5	8.5	220	0	7	-	75	75	75	FKM			**4270**	**486265**	14	14	430		
	(3.5)	(5.5)	(9.5)	(400)	0	7	-	75	75	75	FKM			**4270**	**486265**	14	14	430		

Table continued on page 134

Notes:

* See Electrical Parts Group table at end of section

1. Manual override standard

Values shown within brackets are valid for exhaust port only.

Parker Lucifer SA
Fluid Control Division Europe
CH-1227 Carouge-Genève

Tel: +45 63 12 83 00 | Email: ps@hymatik.com | www.hymatik.com | Hvidkaervej 27a, DK-5250 Odense SV, Denmark

General application valves 3/2 - Direct operated

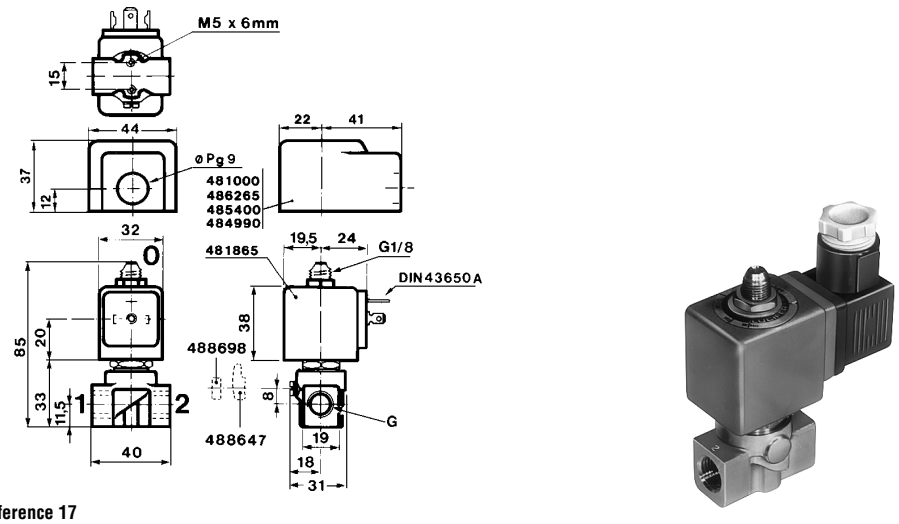

Dimension reference 17

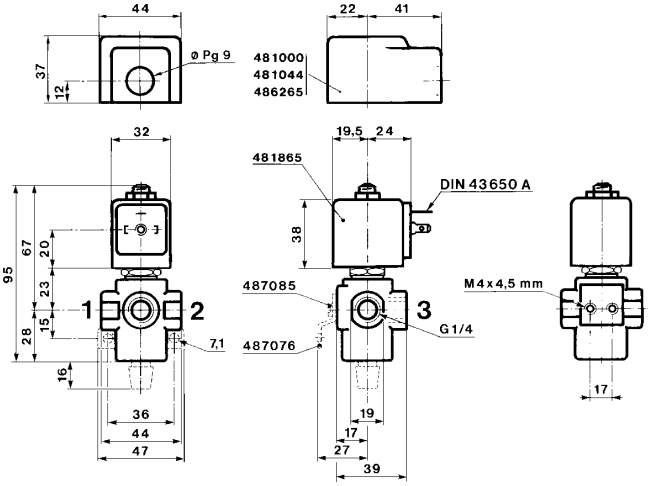



Dimension reference 18

Parker Lucifer SA
Fluid Control Division Europe
CH-1227 Carouge-Genève

General application valves 3/2 - Direct operated

Port size G	Orifice (mm)	Flow factors (L/min) Liquids kv	Liquids Qmax	Gases Qn	Admissible differential pressure bar Min	Max DC	Max AC	Fluid temp. °C Gas	Liquid	Oil	Seat disc	Reference numbers Global valve reference	Valve reference no.	OR Housing	Coil	Power consumption (W) DC	AC	Wt. (g)	El. Part Group *	Dim ref.

Brass body/Pipe mounting

Normally open

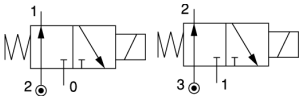

1/4	3	6	10.5	450	0	-	10	75	75	75	FKM	7132TBG2NVA0	**132T22**	**4270**	**481044**	-	14	420		18
	(4)	(4.5)	(9)	(355)	0	-	10	75	75	75	FKM			**4270**	**481044**	-	14	420		
	3	4.5	9	355	0	-	7	75	75	75	FKM			**2995**	**492425**	-	14	325		
	(4)	(6)	(10.5)	(450)	0	-	7	75	75	75	FKM			**2995**	**492425**	-	14	325		

Brass body/Pipe mounting

Universal

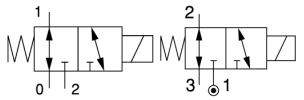

1/8	1.5	1.5	4.7	80	0	10	10	100	100	100	FKM	7133KBG1GV00	**E133K14**	**2995**	**481865**	9	8	325	2	17
	1.5	1.5	4.7	80	0	10	10	120	120	120	FKM			**4270**	**481000**	8	8	445	2	
	2	2.5	6.6	145	0	7	7	100	100	100	FKM	7133KBG1JV00	**E133K16**	**2995**	**481865**	9	8	325	2	17
	2	2.5	6.6	145	0	7	7	120	120	120	FKM			**4270**	**481000**	8	8	445	2	
	2.5	3.5	7	220	0	4	4	100	100	100	FKM	7133KBG1LV00	**E133K13**	**2995**	**481865**	9	8	325	2	17
	2.5	3.5	7	220	0	4	4	120	120	120	FKM			**4270**	**481000**	8	8	445	2	
1/4	1.5	1.5	4.5	80	0	10	10	100	100	100	FKM	7133KBG2GVM0	**E133K0450** [1]	**2995**	**481865**	9	8	310	2	17
	1.5	1.5	4.5	80	0	10	10	120	120	120	FKM			**4270**	**481000**	8	8	430	2	
	1.5	1.5	4.5	80	0	10	10	100	100	100	FKM	7133KBG2GV00	**E133K04**	**2995**	**481865**	9	8	310	2	17
	1.5	1.5	4.5	80	0	10	10	120	120	120	FKM			**4270**	**481000**	8	8	430	2	
	1.5	1.5	4.5	80	0	10	10	75	75	75	NBR	7133KBG2GV1D	**E133K04001D**	**-**	**483250**	8	8	1255	5	3845
	2	2.5	7	140	0	7	7	75	75	75	FKM	7133TBG2JVM0	**133T2301** [1]	**2995**	**481865**	9	8	400		18
	2	2.5	7	140	0	7	7	75	75	75	FKM			**4270**	**481000**	8	8	520		
	2	2.5	7	140	0	7	7	75	75	75	FKM	7133TBG2JV00	**133T23**	**2995**	**481865**	9	8	400		18
	2	2.5	7	140	0	7	7	75	75	75	FKM			**4270**	**481000**	8	8	520		
	2	2.5	6.6	145	0	7	7	100	100	100	FKM	7133KBG2JVM0	**E133K0650** [1]	**2995**	**481865**	9	8	310	2	17
	2	2.5	6.6	140	0	7	7	120	120	120	FKM			**4270**	**481000**	8	8	430	2	
	2	2.5	6.6	145	0	7	7	100	100	100	FKM	7133KBG2JV00	**E133K06**	**2995**	**481865**	9	8	310	2	17
	2	2.5	6.6	140	0	7	7	120	120	120	FKM			**4270**	**481000**	8	8	430	2	
	2.5	3.5	7	220	0	4	4	100	100	100	FKM	7133KBG2LVM0	**E133K0350** [1]	**2995**	**481865**	9	8	310	2	17
	2.5	3.5	7	220	0	4	4	120	120	120	FKM			**4270**	**481000**	8	8	430	2	
	2.5	3.5	7	220	0	4	4	100	100	100	FKM	7133KBG2LV00	**E133K03**	**2995**	**481865**	9	8	310	2	17
	2.5	3.5	7	220	0	4	4	120	120	120	FKM			**4270**	**481000**	8	8	430	2	
	3	4.5	6	355	0	2	2	75	75	75	FKM	7133TBG2NVM0	**133T2101** [1]	**2995**	**481865**	9	8	300	2	18
	3	4.5	6	355	0	2	2	75	75	75	FKM			**4270**	**481000**	8	8	420	2	
	3	4.5	6	355	0	2	2	75	75	75	FKM	7133TBG2NV00	**133T21**	**2995**	**481865**	9	8	400	2	18
	3	4.5	6	355	0	2	2	75	75	75	FKM			**4270**	**481000**	8	8	520	2	

Table continued on page 136

Notes:

* See Electrical Parts Group table at end of section

1. Manual override standard

Values shown within brackets are valid for exhaust port only.

Parker Lucifer SA
Fluid Control Division Europe
CH-1227 Carouge-Genève

Tel: +45 63 12 83 00 | Email: ps@hymatik.com | www.hymatik.com | Hvidkaervej 27a, DK-5250 Odense SV, Denmark

General application valves 3/2 - Direct operated

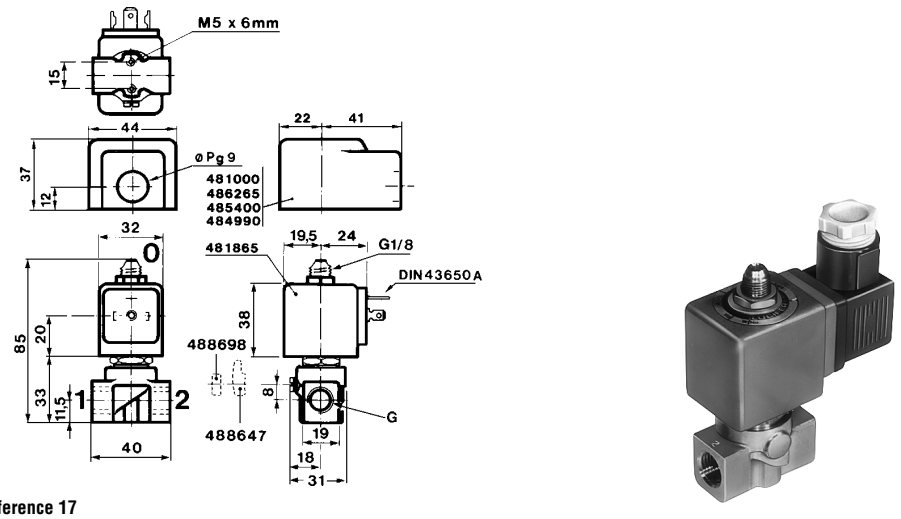

Dimension reference 17

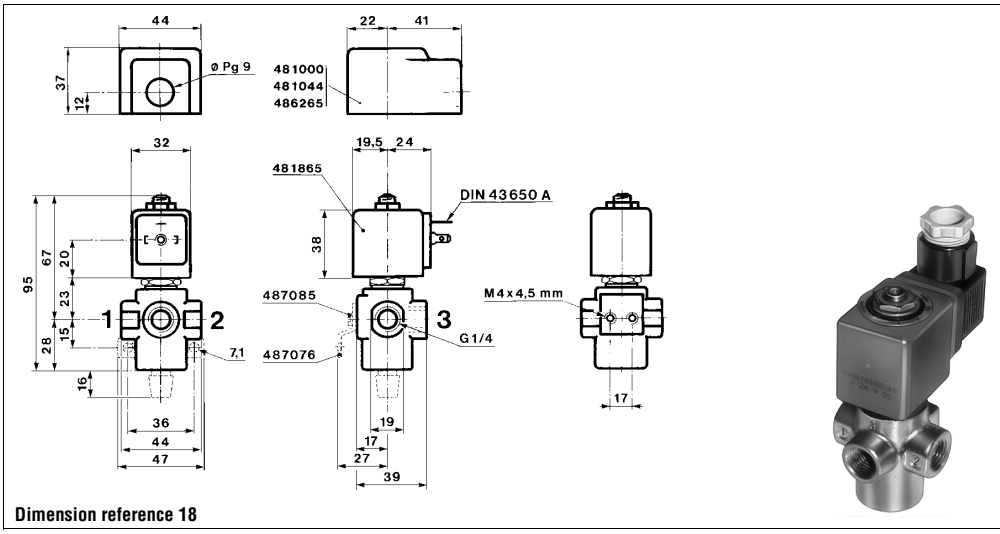

Dimension reference 18

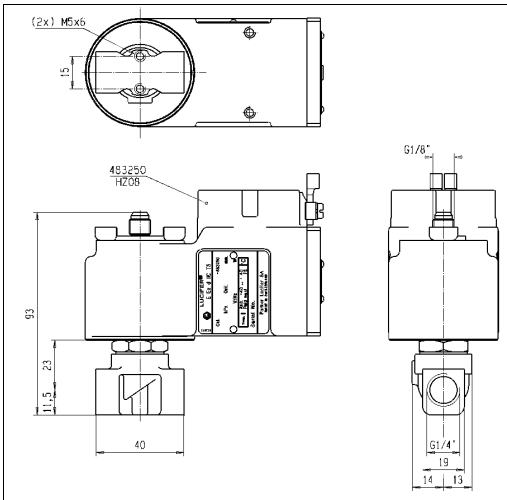

Dimension reference 3845

Parker Lucifer SA
Fluid Control Division Europe
CH-1227 Carouge-Genève

General application valves 3/2 - Direct operated

Port size	Orifice (mm)	Flow factors (L/min)			Admissible differential pressure bar			Fluid temp. °C			Seat disc	Reference numbers			OR	Power consumption (W)		Wt. (g)	El. Part Group *	Dim ref.
		Liquids		Gases	Min	Max		Gas	Liquid	Oil		Global valve reference	Valve reference no.	Housing	Coil	DC	AC			
G		kv	Qmax	Qn		DC	AC													

Brass body/Pipe mounting

Magnetic latch control

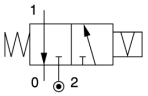

1/4	1.5	1.5	6	80	0	-	16	100	100	100	FKM	7135KBG2GV00	**135K04**	**4269**	**484990**	-	11	450	4	17
	1.5	1.5	6	80	0	16	-	100	100	100	FKM			**4269**	**485400**	13	-	450	4	
	2.5	3.5	8.5	220	0	-	7	100	100	100	FKM	7135KBG2LV00	**135K03**	**4269**	**484990**	-	11	450	4	17
	2.5	3.5	8.5	220	0	7	-	100	100	100	FKM			**4269**	**485400**	13	-	450	4	

Brass body/Sub-base mounting

Normally closed

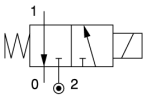

SB	1	0.6	-	-	0	10	-	75	75	-	FKM	-	**131F4490** [1]	-	**483580.01** [2]	0.4	-	235	7	79

Table continued on page 138

Notes:

* See Electrical Parts Group table at end of section

1. Other coil-housing available: 488650.01, 488660.01, 4888670.01 (refer to electrical parts at end of this section)
2. This reference no. is for the complete electrical part (coil + housing)

Parker Lucifer SA
Fluid Control Division Europe
CH-1227 Carouge-Genève

Tel: +45 63 12 83 00 | Email: ps@hymatik.com | www.hymatik.com | Hvidkaervej 27a, DK-5250 Odense SV, Denmark

General application valves 3/2 - Direct operated

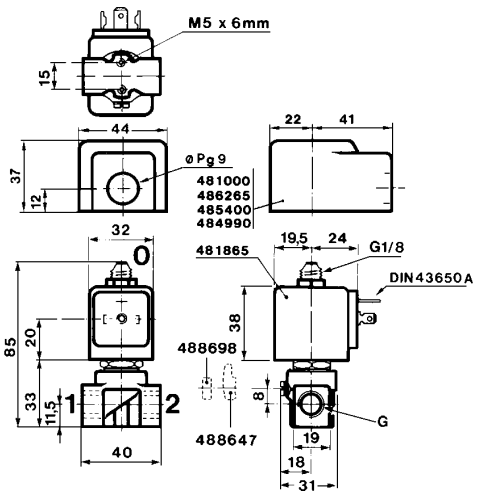

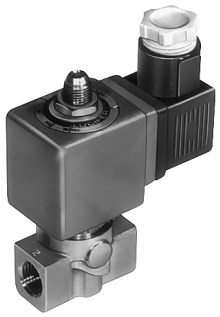

Dimension reference 17

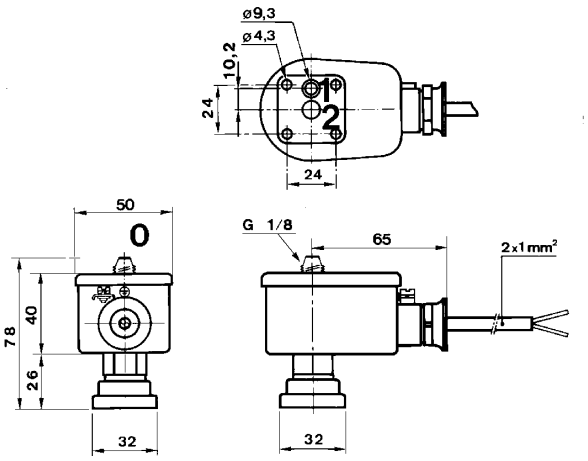

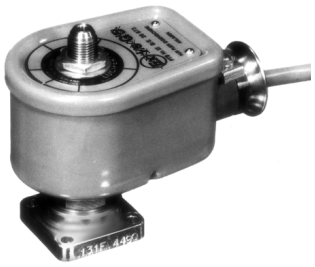

Dimension reference 79

Parker Lucifer SA
Fluid Control Division Europe
CH-1227 Carouge-Genève

General application valves 3/2 - Direct operated

Port size	Orifice (mm)	Flow factors (L/min)			Admissible differential pressure bar			Fluid temp. °C			Seat disc	Reference numbers					Power consumption (W)		Wt. (g)	El. Part Group *	Dim ref.
		Liquids		Gases	Min	Max		Gas	Liquid	Oil		Global valve reference	Valve reference no.		OR						
G		kv	Qmax	Qn		DC	AC							Housing	Coil		DC	AC			

Brass body/Sub-base mounting

Normally closed

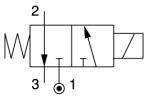

SB	1.2	0.7	2.2	50	0	10	10	75	75	75	FKM	-	**131M75**	**8993**	**488980**	2.5	2	125	1	26
	(1.5)	(0.9)	(2.2)	(70)	0	10	10	75	75	75	FKM			**8993**	**488980**	2.5	2	125	1	
	1.2	0.7	2.2	50	0	10	10	75	75	75	FKM	-	**131M7550** [1]	**8993**	**488980**	2.5	2	125	1	26
	(1.5)	(1)	(2.2)	(70)	0	10	10	75	75	75	FKM			**8993**	**488980**	2.5	2	125	1	

Table continued on page 140

Notes:

* See Electrical Parts Group table at end of section

1. Manual override standard

Values shown within brackets are valid for exhaust port only.

Parker Lucifer SA
Fluid Control Division Europe
CH-1227 Carouge-Genève

Tel: +45 63 12 83 00 | Email: ps@hymatik.com | www.hymatik.com | Hvidkaervej 27a, DK-5250 Odense SV, Denmark

General application valves 3/2 - Direct operated

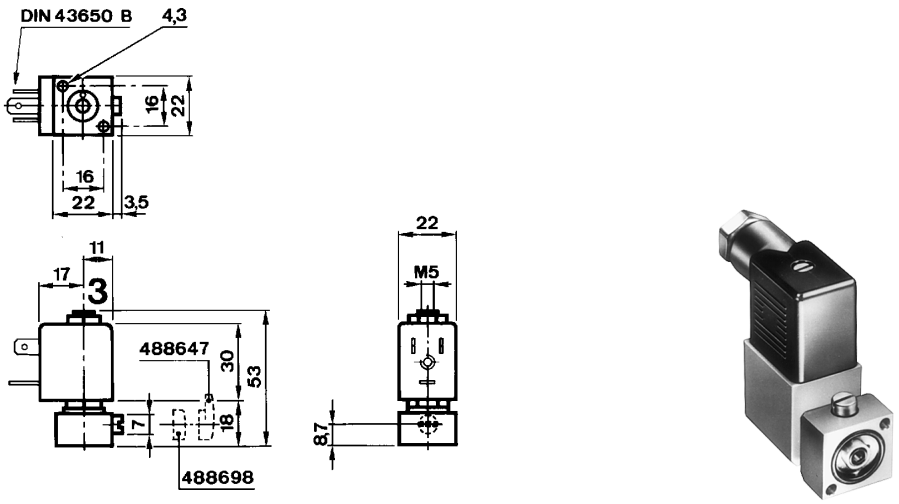

Dimension reference 26

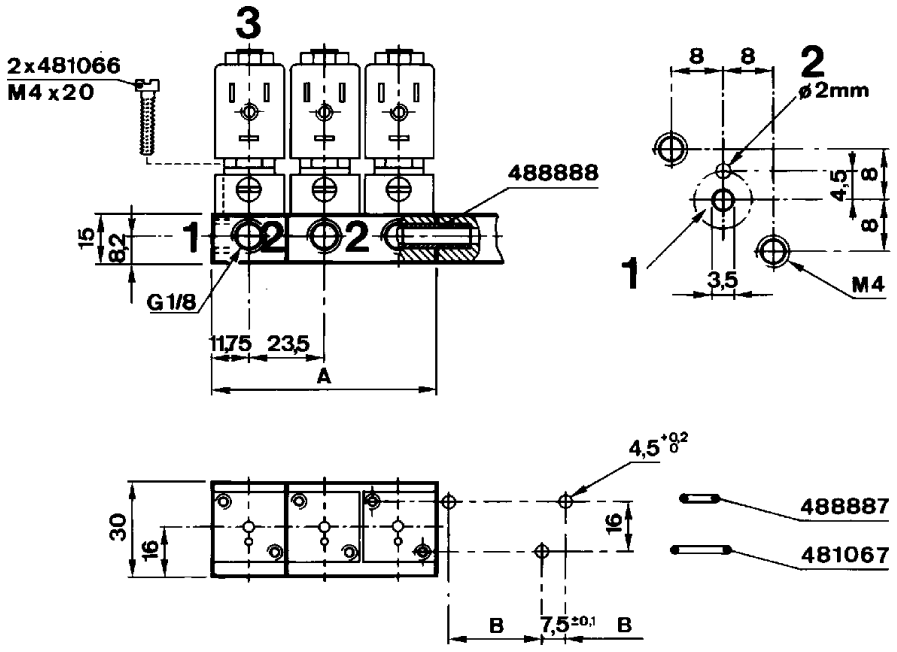

Quantity of valves by assembly	Reference numbers	A mm	B mm	Wt. (g)
1	488860-01	23.5	16 ± 0.1	25
2	488860-02	47	39.5 ± 0.1	45
3	488860-03	70.5	63 ± 0.1	70
4	488860-04	94	86.5 ± 0.1	120
5	488860-05	117.5	110 ± 0.1	120

Associated sub-base diagram

Parker Lucifer SA
Fluid Control Division Europe
CH-1227 Carouge-Genève

Tel: +45 63 12 83 00 | Email: ps@hymatik.com | www.hymatik.com | Hvidkaervej 27a, DK-5250 Odense SV, Denmark

General application valves 3/2 - Direct operated

Port size	Orifice (mm)	Flow factors (L/min)			Admissible differential pressure bar			Fluid temp. °C			Seat disc	Reference numbers					Power consumption (W)		Wt. (g)	El. Part Group *	Dim ref.
		Liquids		Gases	Min	Max		Gas	Liquid	Oil		Global valve reference	Valve reference no.		OR						
G		kv	Qmax	Qn		DC	AC							Housing	Coil		DC	AC			

Brass body/Sub-base mounting

Normally closed

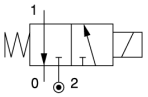

SB	1.5	1.5	4	80	0	7	-	75	75	75	FKM	7131FBF4GLV5	**131F4480**	**2995**	**482740**	1.6	-	255	6	27

Table continued on page 142

Notes:

* See Electrical Parts Group table at end of section

Parker Lucifer SA
Fluid Control Division Europe
CH-1227 Carouge-Genève

Tel: +45 63 12 83 00 | Email: ps@hymatik.com | www.hymatik.com | Hvidkaervej 27a, DK-5250 Odense SV, Denmark

General application valves 3/2 - Direct operated

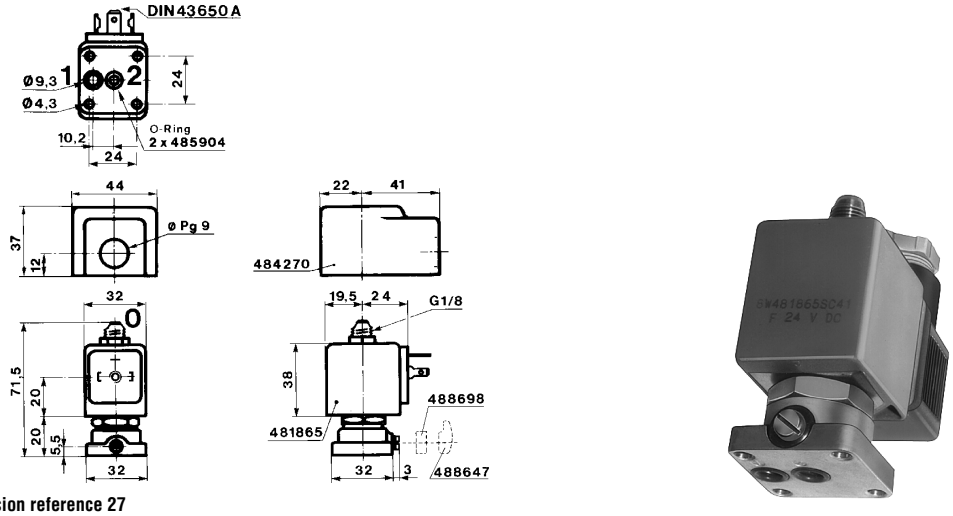

Dimension reference 27

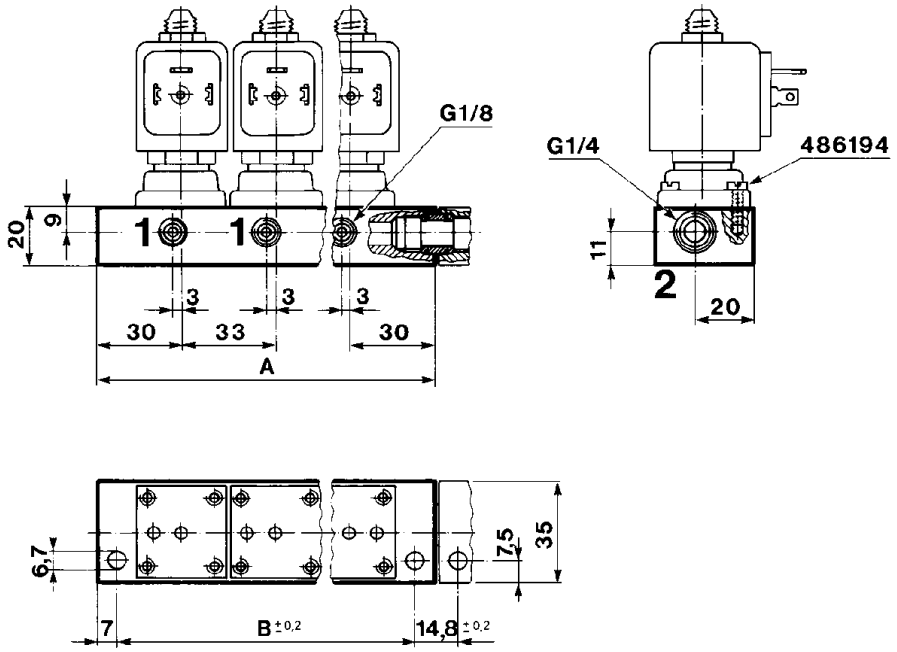

Quantity of valves by assembly	Reference numbers	A mm	B mm	Wt. (g)
2	486162	93	79	150
3	486163	126	112	210
5	486164	192	178	420

Associated sub-base diagram

Parker Lucifer SA
Fluid Control Division Europe
CH-1227 Carouge-Genève

Tel: +45 63 12 83 00 | Email: ps@hymatik.com | www.hymatik.com | Hvidkaervej 27a, DK-5250 Odense SV, Denmark

General application valves 3/2 - Direct operated

Port size	Orifice (mm)	Flow factors (L/min)			Admissible differential pressure bar			Fluid temp. °C			Seat disc	Reference numbers					Power consumption (W)		Wt. (g)	El. Part Group *	Dim ref.
		Liquids		Gases	Min	Max		Gas	Liquid	Oil		Global valve reference	Valve reference no.	Housing	Coil	OR	DC	AC			
G		kv	Qmax	Qn		DC	AC														

Brass body/Sub-base mounting

Normally closed

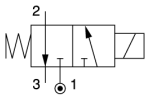

SB	1.5	0.9	2.4	70	0	7	7	75	75	75	FKM	-	**131M74**	**8993**	**488980**	2.5	2	125	1	26
	1.5	0.9	2.4	70	0	7	7	75	75	75	FKM	-	**131M7450** [1]	**8993**	**488980**	2.5	2	125	1	26

Table continued on page 144

Notes:

* See Electrical Parts Group table at end of section

1. Manual override standard

Parker Lucifer SA
Fluid Control Division Europe
CH-1227 Carouge-Genève

Tel: +45 63 12 83 00 | Email: ps@hymatik.com | www.hymatik.com | Hvidkaervej 27a, DK-5250 Odense SV, Denmark

General application valves 3/2 - Direct operated

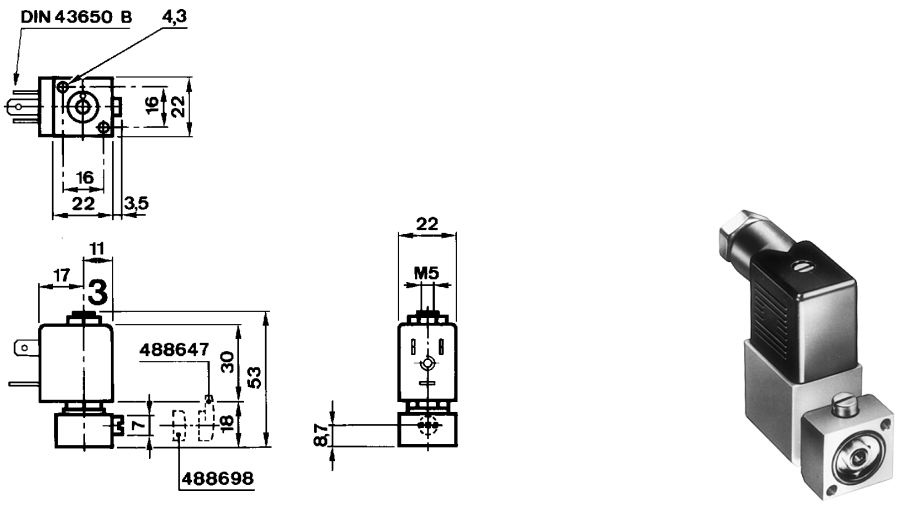

Dimension reference 26

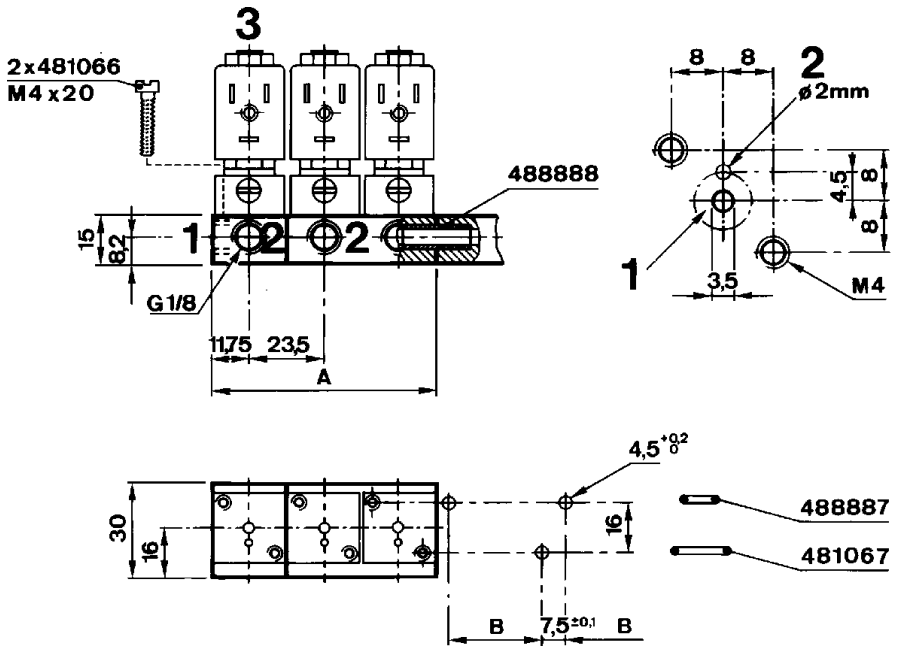

Quantity of valves by assembly	Reference numbers	A mm	B mm	Wt. (g)
1	488860-01	23.5	16 ± 0.1	25
2	488860-02	47	39.5 ± 0.1	45
3	488860-03	70.5	63 ± 0.1	70
4	488860-04	94	86.5 ± 0.1	120
5	488860-05	117.5	110 ± 0.1	120

Associated sub-base diagram

Parker Lucifer SA
Fluid Control Division Europe
CH-1227 Carouge-Genève

Tel: +45 63 12 83 00 | Email: ps@hymatik.com | www.hymatik.com | Hvidkaervej 27a, DK-5250 Odense SV, Denmark

General application valves 3/2 - Direct operated

Port size G	Orifice (mm)	Flow factors (L/min) Liquids kv	Liquids Qmax	Gases Qn	Admissible differential pressure bar Min	Max DC	Max AC	Fluid temp. °C Gas	Liquid	Oil	Seat disc	Reference numbers Global valve reference	Valve reference no.	Housing	Coil	Power consumption (W) DC	AC	Wt. (g)	El. Part Group *	Dim ref.

Brass body/Sub-base mounting

Normally closed

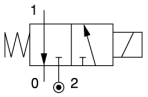

SB	1.5	1.5	5.8	80	0	15	15	100	100	100	FKM	7131FBF4GVM0	**E131F4450** [1]	**2995**	**481865**	9	8	255	2	27
	1.5	1.5	5.8	80	0	15	15	120	120	120	FKM			**4270**	**481000**	8	8	375	2	
	1.5	1.5	5.8	80	0	15	15	100	100	100	FKM	7131FBF4GV00	**E131F44**	**2995**	**481865**	9	8	255	2	27
	1.5	1.5	5.8	80	0	15	15	120	120	120	FKM			**4270**	**481000**	8	8	375	2	
	2	2.5	8	140	0	10	10	100	100	100	FKM	7131FBF4JVM0	**131F4650** [1]	**2995**	**481865**	9	8	255	2	27
	(2.5)	(3.5)	(8.5)	(220)	0	10	10	100	100	100	FKM			**2995**	**481865**	9	8	255	2	
	2	2.5	8	140	0	10	10	120	120	120	FKM			**4270**	**481000**	8	8	375	2	
	(2.5)	(3.5)	(8.5)	(220)	0	10	10	120	120	120	FKM			**4270**	**481000**	8	8	375	2	
	2	2.5	8	140	0	10	10	100	100	100	FKM	7131FBF4JV00	**131F46**	**2995**	**481865**	9	8	255	2	27
	(2.5)	(3.5)	(8.5)	(220)	0	10	10	100	100	100	FKM			**2995**	**481865**	9	8	255	2	
	2	2.5	8	140	0	10	10	120	120	120	FKM			**4270**	**481000**	8	8	375	2	
	(2.5)	(3.5)	(8.5)	(220)	0	10	10	120	120	120	FKM			**4270**	**481000**	8	8	375	2	
	2.5	3.5	8.5	220	0	7	7	100	100	100	FKM	7131FBF4LVM0	**E131F4350** [1]	**2995**	**481865**	9	8	255	2	27
	2.5	3.5	8.5	220	0	7	7	120	120	120	FKM			**4270**	**481000**	8	8	375	2	
	2.5	3.5	8.5	220	0	7	7	100	100	100	FKM	7131FBF4LV00	**E131F43**	**2995**	**481865**	9	8	255	2	27
	2.5	3.5	8.5	220	0	7	7	120	120	120	FKM			**4270**	**481000**	8	8	375	2	

Brass body/Sub-base mounting

Normally open

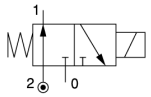

SB	1.5	1.4	6	80	0	16	16	100	100	100	FKM	7132FBF4GV00	**132F44**	**2995**	**481865**	9	8	255	2	27
	1.5	1.4	6	80	0	16	16	120	120	120	FKM			**4270**	**481000**	8	8	375	2	
	2	1.8	6	125	0	10	10	100	100	100	FKM	7132FBF4JV00	**132F46**	**2995**	**481865**	9	8	255	2	27
	2	1.8	6	125	0	10	10	120	120	120	FKM			**4270**	**481000**	8	8	375	2	
	2.5	2.2	8.5	160	0	7	7	100	100	100	FKM	7132FBF4LV00	**132F43**	**2995**	**481865**	9	8	255	2	27
	2.5	2.2	8.5	160	0	7	7	120	120	120	FKM			**4270**	**481000**	8	8	375	2	

Brass body/Sub-base mounting

Universal

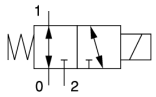

SB	1.5	1.5	4.5	80	0	10	10	100	100	100	FKM	7133FBF4GVM0	**E133F4450** [1]	**2995**	**481865**	9	8	255	2	27
	1.5	1.5	4.5	80	0	10	10	120	120	120	FKM			**4270**	**481000**	8	8	375	2	
	1.5	1.5	4.5	80	0	10	10	100	100	100	FKM	7133FBF4GV00	**E133F44**	**2995**	**481865**	9	8	255	2	27
	1.5	1.5	4.5	80	0	10	10	120	120	120	FKM			**4270**	**481000**	8	8	375	2	
	2	2.5	6	140	0	7	7	100	100	100	FKM	7133FBF4JVM0	**133F4650** [1]	**2995**	**481865**	9	8	255	2	27
	2	2.5	6	140	0	7	7	120	120	120	FKM			**4270**	**481000**	8	8	375	2	
	2	2.5	6	140	0	7	7	100	100	100	FKM	7133FBF4JV00	**133F46**	**2995**	**481865**	9	8	255	2	27
	2	2.5	6	140	0	7	7	120	120	120	FKM			**4270**	**481000**	8	8	375	2	
	2.5	3.5	7	220	0	4	4	100	100	100	FKM	7133FBF4LVM0	**E133F4350** [1]	**2995**	**481865**	9	8	255	2	27
	2.5	3.5	7	220	0	4	4	120	120	120	FKM			**4270**	**481000**	8	8	375	2	

Table continued on page 146

Notes:

* See Electrical Parts Group table at end of section

1. Manual override standard

Values shown within brackets are valid for exhaust port only.

Parker Lucifer SA
Fluid Control Division Europe
CH-1227 Carouge-Genève

Tel: +45 63 12 83 00 | Email: ps@hymatik.com | www.hymatik.com | Hvidkaervej 27a, DK-5250 Odense SV, Denmark

General application valves 3/2 - Direct operated

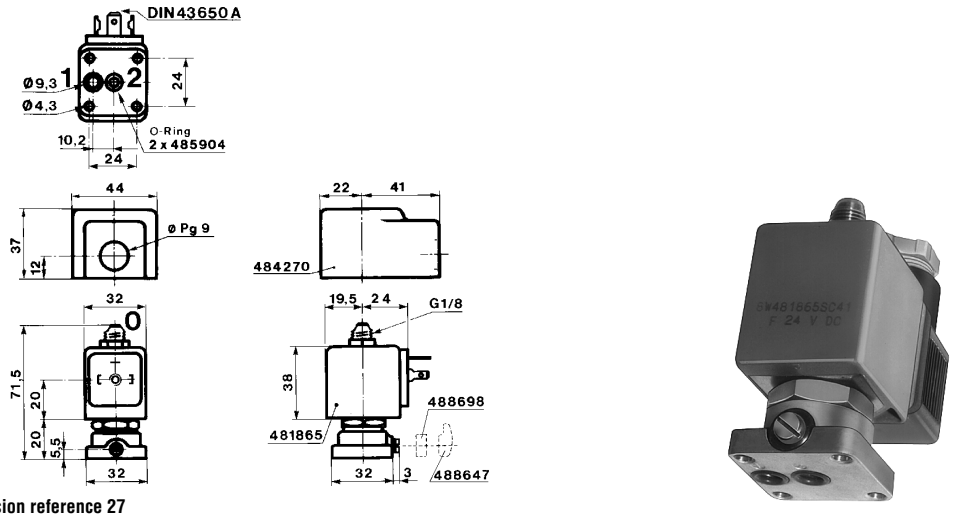

Dimension reference 27

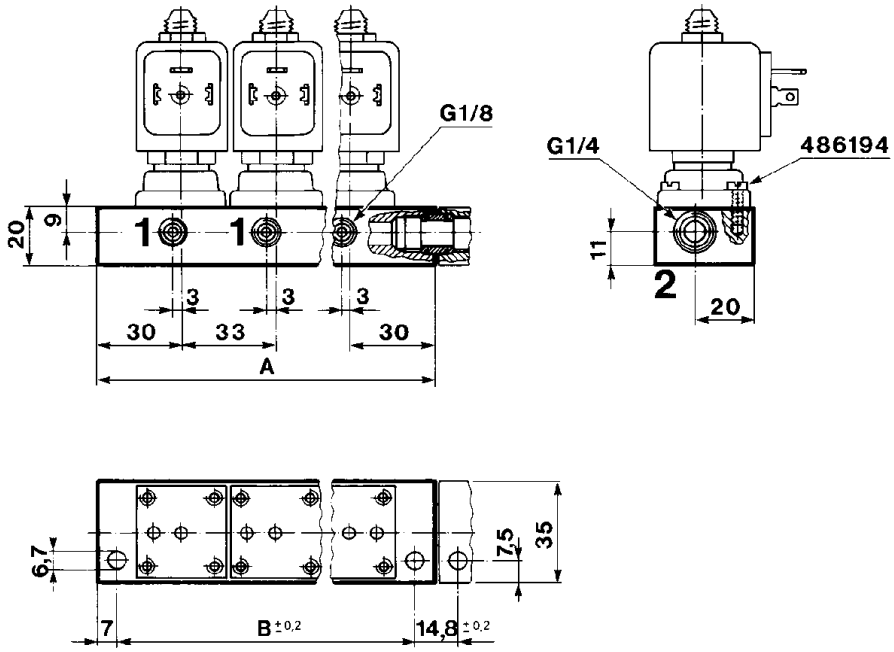

Quantity of valves by assembly	Reference numbers	A mm	B mm	Wt. (g)
2	486162	93	79	150
3	486163	126	112	210
5	486164	192	178	420

Associated sub-base diagram

Parker Lucifer SA
Fluid Control Division Europe
CH-1227 Carouge-Genève

Tel: +45 63 12 83 00 | Email: ps@hymatik.com | www.hymatik.com | Hvidkaervej 27a, DK-5250 Odense SV, Denmark

General application valves 3/2 - Direct operated

Port size	Orifice (mm)	Flow factors (L/min)			Admissible differential pressure bar			Fluid temp. °C			Seat disc	Reference numbers					Power consumption (W)		Wt. (g)	El. Part Group *	Dim ref.
		Liquids		Gases	Min	Max		Gas	Liquid	Oil		Global valve reference	Valve reference no.			OR					
G		kv	Qmax	Qn		DC	AC							Housing	Coil		DC	AC			

Brass body/Sub-base mounting

Universal

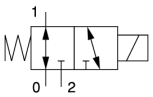

SB	2.5	3.5	7	220	0	4	4	100	100	100	FKM	7133FBF4LV00	**E133F43**	**2995**	**481865**	9	8	255	2	27
	2.5	3.5	7	220	0	4	4	120	120	120	FKM			**4270**	**481000**	8	8	375	2	

Table continued on page 148

Notes:

* See Electrical Parts Group table at end of section

Parker Lucifer SA
Fluid Control Division Europe
CH-1227 Carouge-Genève

Tel: +45 63 12 83 00 | Email: ps@hymatik.com | www.hymatik.com | Hvidkaervej 27a, DK-5250 Odense SV, Denmark

General application valves 3/2 - Direct operated

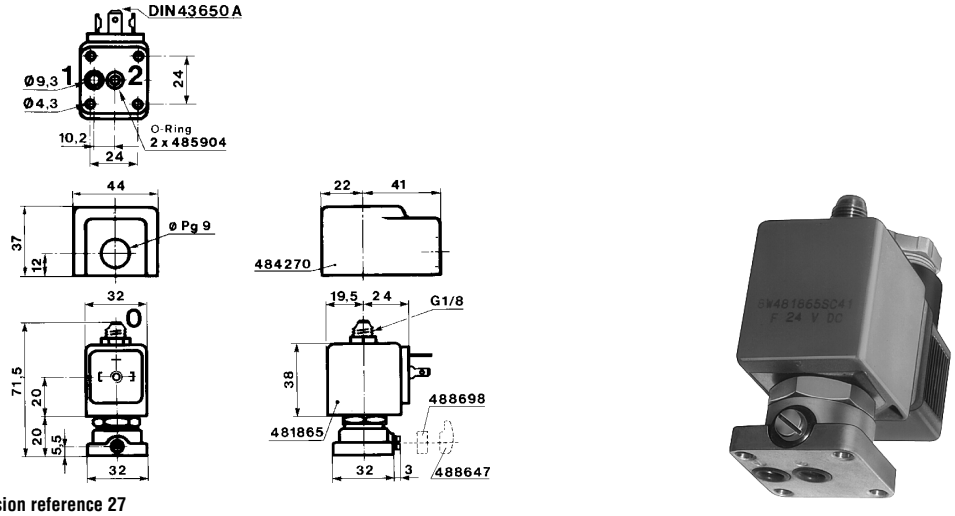

Dimension reference 27

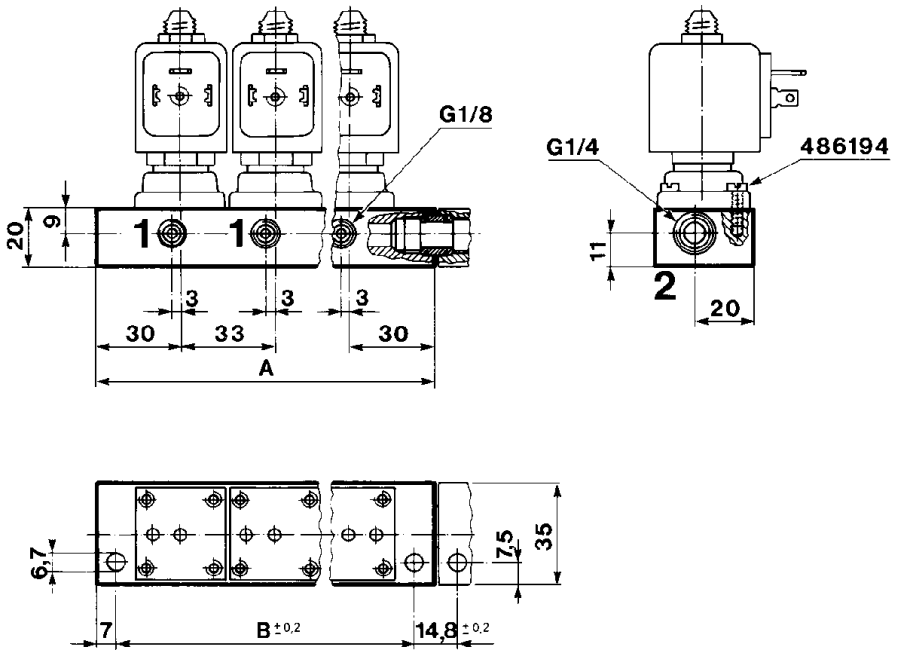

Quantity of valves by assembly	Reference numbers	A mm	B mm	Wt. (g)
2	486162	93	79	150
3	486163	126	112	210
5	486164	192	178	420

Associated sub-base diagram

Parker Lucifer SA
Fluid Control Division Europe
CH-1227 Carouge-Genève

Tel: +45 63 12 83 00 | Email: ps@hymatik.com | www.hymatik.com | Hvidkaervej 27a, DK-5250 Odense SV, Denmark

General application valves 3/2 - Direct operated

Port size	Orifice (mm)	Flow factors (L/min)			Admissible differential pressure bar			Fluid temp. °C			Seat disc	Reference numbers					Power consumption (W)		Wt. (g)	El. Part Group *	Dim ref.
		Liquids		Gases	Min	Max		Gas	Liquid	Oil		Global valve reference	Valve reference no.		OR						
G		kv	Qmax	Qn		DC	AC							Housing	Coil		DC	AC			
Delrin body/Sub-base mounting														Normally closed							
SB	2	2	6.5	140	0	10	10	50	-	-	FKM	7131FDF2JV00	**E131F26** [1]	**2995**	**481865** [2]		-	8	200	2	28
	2	2	6.5	140	0	10	10	50	-	-	FKM			**2995**	**482730**		7	6	200	2	

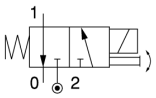

Notes:

* See Electrical Parts Group table at end of section

1. Manual override standard
2. 20% Switch-on - max. 2 min.

Parker Lucifer SA
Fluid Control Division Europe
CH-1227 Carouge-Genève

General application valves 3/2 - Direct operated

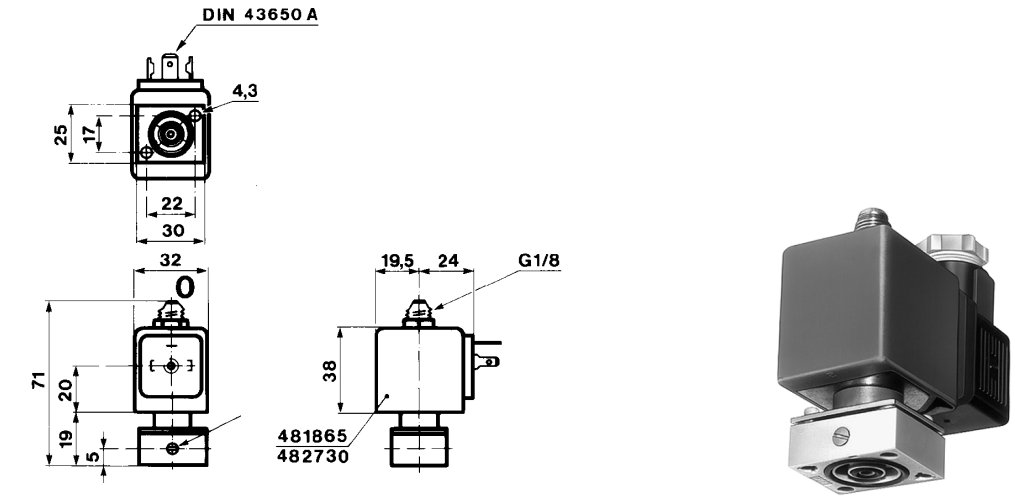

Dimension reference 28

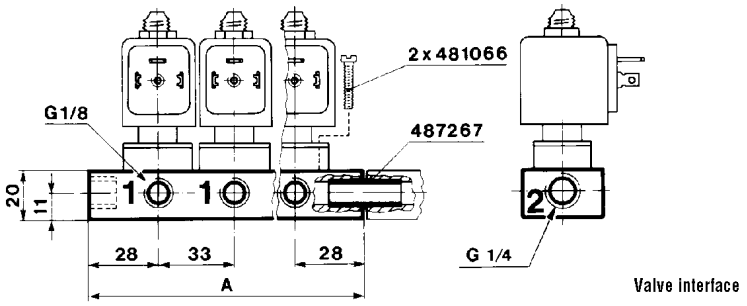

Valve interface

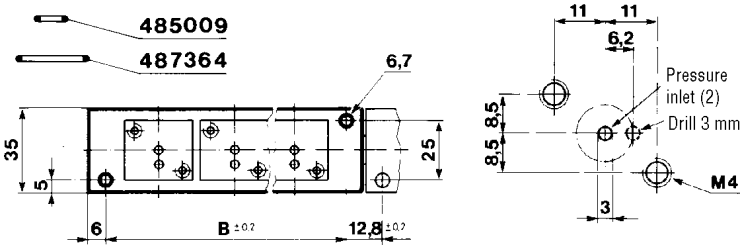

Quantity of valves by assembly	Reference numbers	A mm	B mm	Wt. (g)
1	487165	56	44	85
2	487167	89	77	135
3	487169	188	176	300

Associated sub-base diagram

Parker Lucifer SA
Fluid Control Division Europe
CH-1227 Carouge-Genève

Tel: +45 63 12 83 00 | Email: ps@hymatik.com | www.hymatik.com | Hvidkaervej 27a, DK-5250 Odense SV, Denmark

General application valves for dry or lubricated air, neutral gases and liquids

3/2



Pilot operated

Port size G	Orifice (mm)	Flow factors (L/min) Liquids kv	Liquids Qmax	Gases Qn	Admissible differential pressure bar Min	Max DC	Max AC	Fluid temp. °C Gas	Liquid	Oil	Seat disc	Reference numbers Global valve reference	Valve reference no.	OR Housing	Coil	Power consumption (W) DC	AC	Wt. (g)	El. Part Group *	Dim ref.
1/4	6.5	-	-	750	1	10	-	75	-	-	NBR	7331BAG2KNL2	**331B7480**	**2995**	**482740**	1.6	-	510	6	20
	6.5	10	-	645	1	10	-	75	-	-	NBR	-	**331B7490** [1]	-	**483580.01** [2]	0.4	-	485	7	80
	6.5	-	-	750	1	10	10	75	-	-	NBR	7331BAG2KNMO	**E331B74** [3]	**2995**	**481865**	9	8	510	2	20
	8	10	10	750	1	40	40	75	-	75	NBR	7331BAG2KN00	**331B02** [4]	**2995**	**481865**	9	8	880	2	23
	8	10	10	750	1	40	40	75	-	75	NBR			**4270**	**481000**	8	8	1000	2	

Anod. aluminium body/Pipe mounting

Normally closed

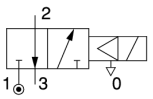

Table continued on page 152

Notes:

* See Electrical Parts Group table at end of section

1. Other coil-housing available: 488650.01, 488660.01, 4888670.01 (refer to electrical parts at end of this section)
2. This reference no. is for the complete electrical part (coil + housing)
3. Manual override standard
4. Pilot seat discs from Kel-F (PCTFE); valve with pilot return pipe

Parker Lucifer SA
Fluid Control Division Europe
CH-1227 Carouge-Genève

Tel: +45 63 12 83 00 | Email: ps@hymatik.com | www.hymatik.com | Hvidkaervej 27a, DK-5250 Odense SV, Denmark

General application valves 3/2 - Pilot operated

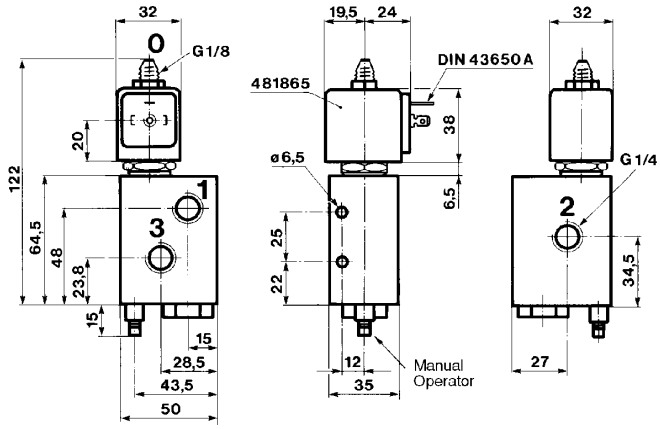



Dimension reference 20

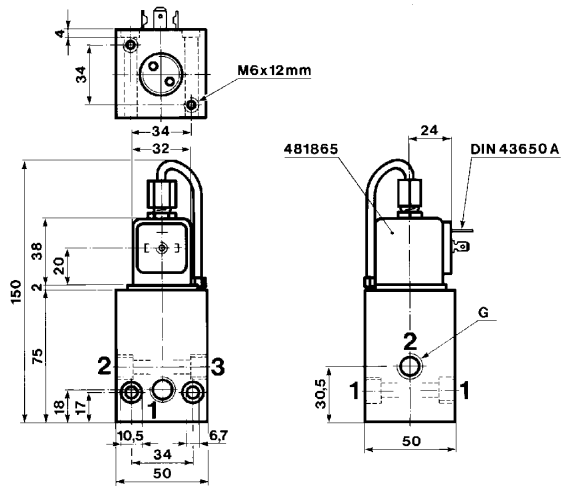



Dimension reference 23

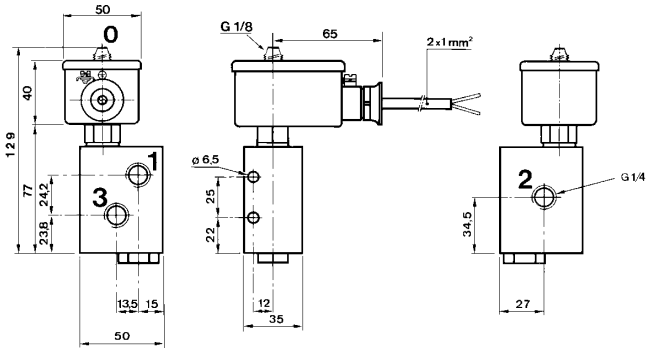

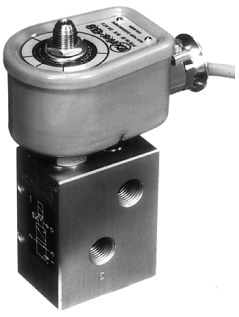

Dimension reference 80

Parker Lucifer SA
Fluid Control Division Europe
CH-1227 Carouge-Genève

Tel: +45 63 12 83 00 | Email: ps@hymatik.com | www.hymatik.com | Hvidkaervej 27a, DK-5250 Odense SV, Denmark

General application valves 3/2 - Pilot operated

Anod. aluminium body/Pipe mounting

Normally closed

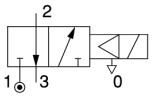

Port size G	Orifice (mm)	Flow factors (L/min) Liquids kv	Liquids Qmax	Gases Qn	Admissible differential pressure bar Min	Max DC	Max AC	Fluid temp. °C Gas	Liquid	Oil	Seat disc	Reference numbers Global valve reference	Valve reference no.	Housing	Coil	Power consumption (W) DC	AC	Wt. (g)	El. Part Group *	Dim ref.
1/4	8	20	20	1100	1	15	15	75	-	75	NBR	7331BAG2QN00	**E331B01**	**2995**	**481865**	9	8	880	2	21
	8	20	20	1100	1	15	15	75	-	75	NBR			**4270**	**481000**	8	8	1000	2	
1/2	14	-	-	2500	1	15	15	75	-	-	NBR	7331BAG4QN00	**E331B21**	**2995**	**481865**	9	8	980	2	24
	14	-	-	2500	1	15	15	75	-	-	NBR			**4270**	**481000**	8	8	1100	2	

Anod. aluminium body/Pipe mounting

Normally open

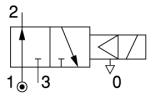

1/4	8	10	10	750	1	40	40	75	-	75	NBR	7332BAG2KN00	**332B02** [1]	**2995**	**481865**	9	8	880	2	25
	8	10	10	750	1	40	40	75	-	75	NBR			**4270**	**481000**	8	8	1000	2	

Table continued on page 154

Notes:

* See Electrical Parts Group table at end of section

1. Pilot seat discs from Kel-F (PCTFE); valve with pilot return pipe

Parker Lucifer SA
Fluid Control Division Europe
CH-1227 Carouge-Genève

Tel: +45 63 12 83 00 | Email: ps@hymatik.com | www.hymatik.com | Hvidkaervej 27a, DK-5250 Odense SV, Denmark

General application valves 3/2 - Pilot operated

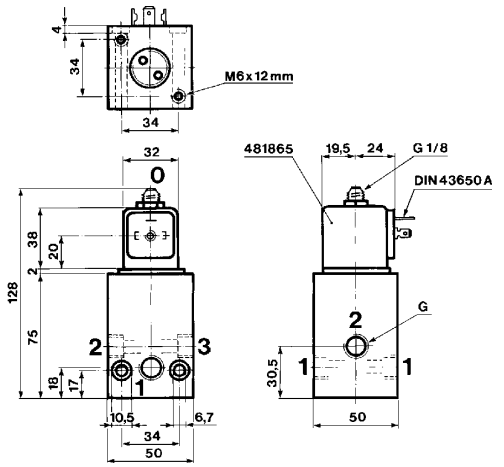



Dimension reference 21

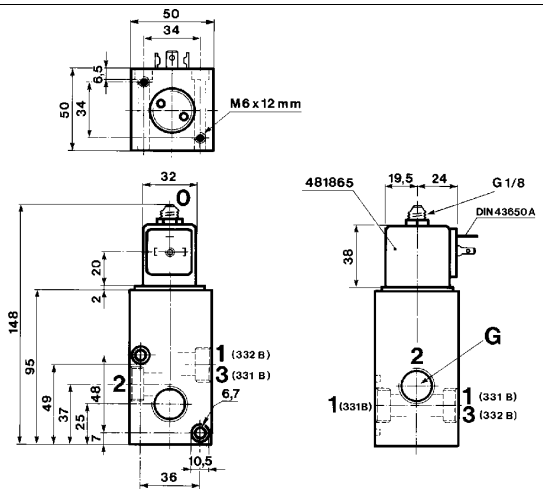

Dimension reference 24

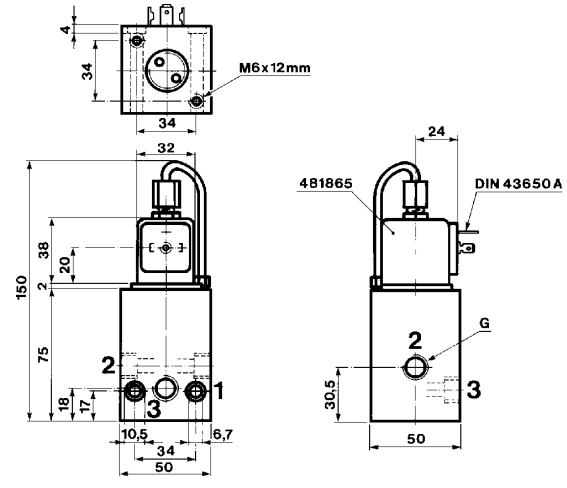



Dimension reference 25

Parker Lucifer SA
Fluid Control Division Europe
CH-1227 Carouge-Genève

General application valves 3/2 - Pilot operated

Port size	Orifice (mm)	Flow factors (L/min)			Admissible differential pressure bar			Fluid temp. °C			Seat disc	Reference numbers				Power consumption (W)		Wt. (g)	El. Part Group *	Dim ref.
		Liquids		Gases	Min	Max		Gas	Liquid	Oil		Global valve reference	Valve reference no.	Housing	Coil	DC	AC			
G		kv	Qmax	Qn		DC	AC													

Anod. aluminium body/Pipe mounting

Normally open

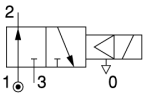

1/4	8	20	20	1100	1	15	15	75	-	75	NBR	7332BAG2QN00	**E332B01**	**2995**	**481865**	9	8	880	2	22
	8	20	20	1100	1	15	15	75	-	75	NBR			**4270**	**481000**	8	8	1000	2	
1/2	14	-	-	2500	1	15	15	75	-	-	NBR	7332BAG4QN00	**E332B21**	**2995**	**481865**	9	8	980	2	24
	14	-	-	2500	1	15	15	75	-	-	NBR			**4270**	**481000**	8	8	1100	2	

Table continued on page 156

Notes:

* See Electrical Parts Group table at end of section

Parker Lucifer SA
Fluid Control Division Europe
CH-1227 Carouge-Genève

Tel: +45 63 12 83 00 | Email: ps@hymatik.com | www.hymatik.com | Hvidkaervej 27a, DK-5250 Odense SV, Denmark

General application valves 3/2 - Pilot operated

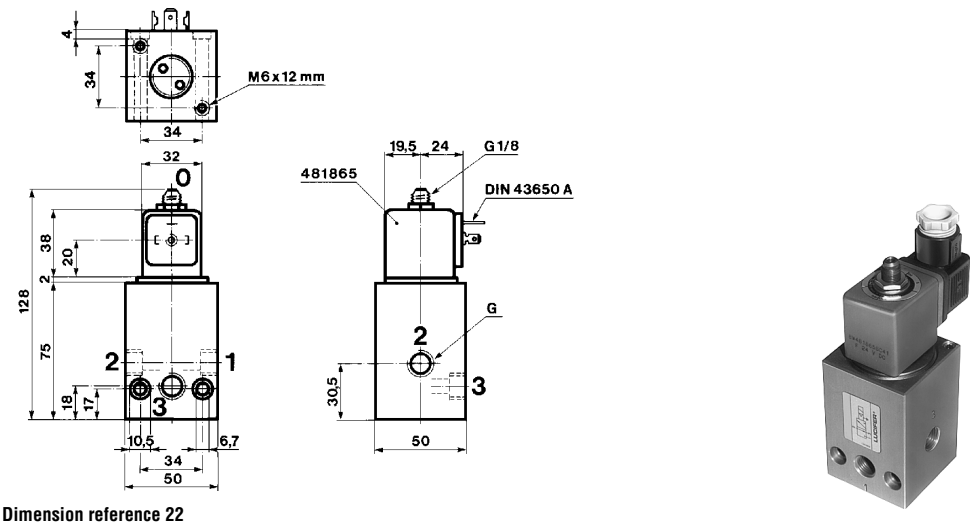

Dimension reference 22

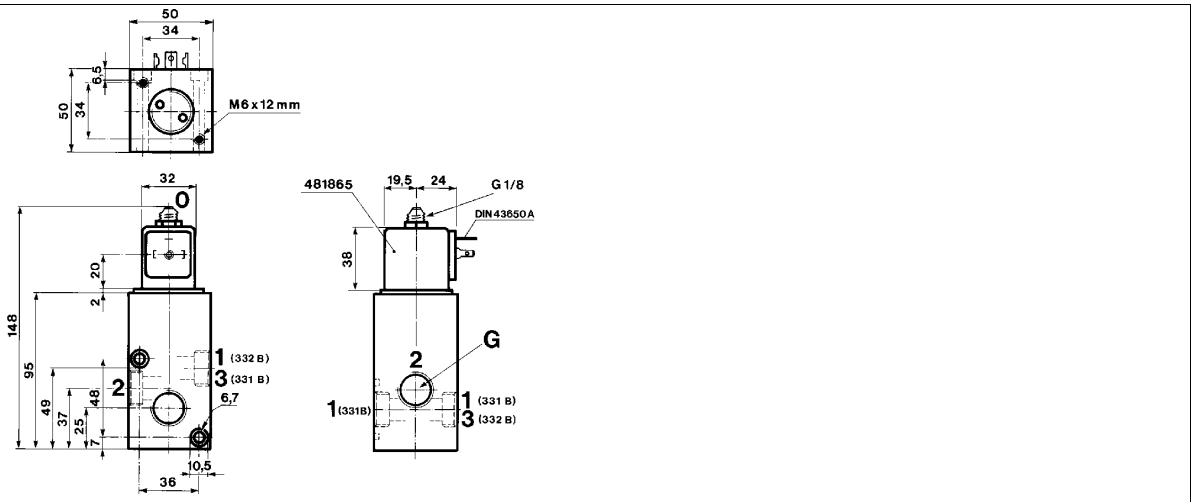

Dimension reference 24

Parker Lucifer SA
Fluid Control Division Europe
CH-1227 Carouge-Genève

General application valves 3/2 - Pilot operated

Port size	Orifice (mm)	Flow factors (L/min)			Admissible differential pressure bar			Fluid temp. °C			Seat disc	Reference numbers				Power consumption (W)		Wt. (g)	El. Part Group *	Dim ref.
		Liquids		Gases	Min	Max		Gas	Liquid	Oil		Global valve reference	Valve reference no.	Housing	Coil	DC	AC			
G		kv	Qmax	Qn		DC	AC													

Anod. aluminium body/Sub-base mounting

Normally closed

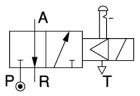

1/2	15	56	-	5000	0.5	10	10	75	-	-	NBR	7331LAV4TN1D	**E331L21001D**	-	**483250**	8	8	1715	5	3854

Table continued on page 158

Notes:

* See Electrical Parts Group table at end of section

Parker Lucifer SA
Fluid Control Division Europe
CH-1227 Carouge-Genève

Tel: +45 63 12 83 00 | Email: ps@hymatik.com | www.hymatik.com | Hvidkaervej 27a, DK-5250 Odense SV, Denmark

General application valves 3/2 - Pilot operated

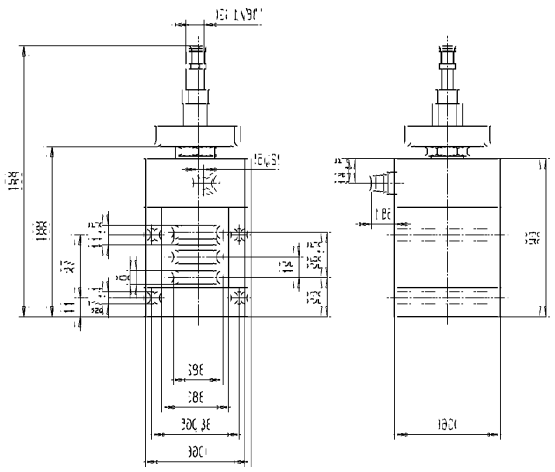

Dimension reference 3854

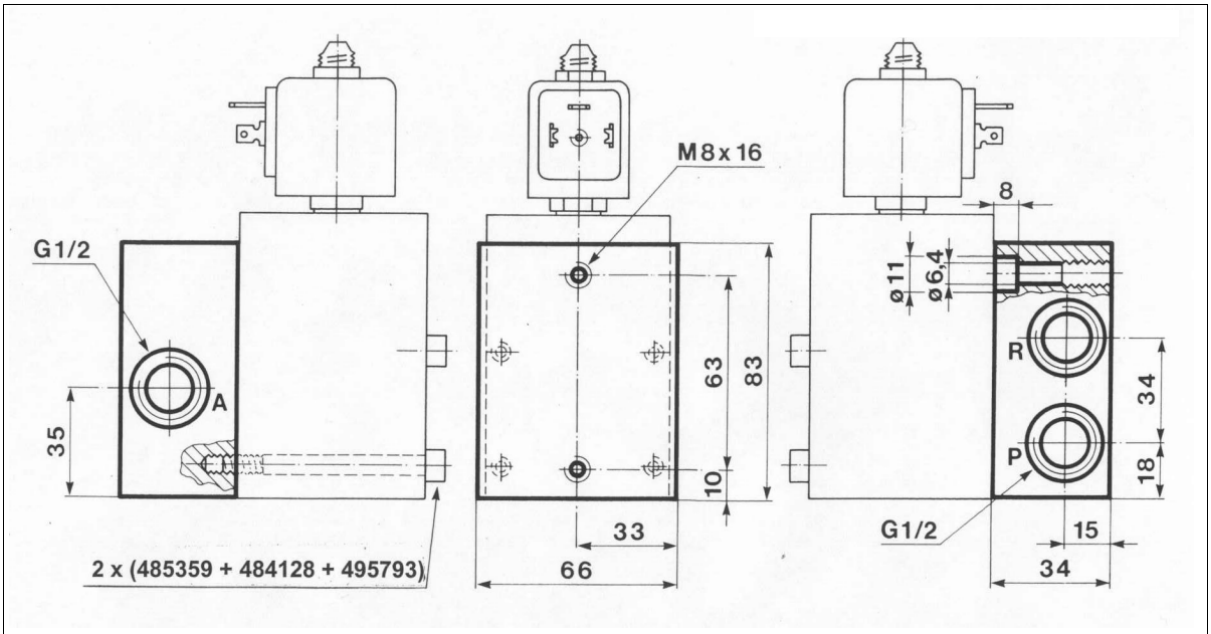

Associated sub-base diagram

Parker Lucifer SA
Fluid Control Division Europe
CH-1227 Carouge-Genève

General application valves 3/2 - Pilot operated

Port size	Orifice (mm)	Flow factors (L/min)			Admissible differential pressure bar			Fluid temp. °C			Seat disc	Reference numbers				Power consumption (W)		Wt. (g)	El. Part Group *	Dim ref.
		Liquids		Gases	Min	Max		Gas	Liquid	Oil		Global valve reference	Valve reference no.	Housing	Coil	DC	AC			
G		kv	Qmax	Qn		DC	AC													

Anod. aluminium body/Sub-base mounting

Normally closed

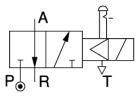

1/2	15	-	-	5000	0.5	10	10	75	-	-	NBR	7331LAV4TNM0	**E331L21** [1]	**2995**	**481865**	9	8	880	2	29
	15	-	-	5000	0.5	10	10	75	-	-	NBR			**4270**	**481000**	8	8	1100	2	

Notes:

* See Electrical Parts Group table at end of section

1. Manual override standard

Parker Lucifer SA
Fluid Control Division Europe
CH-1227 Carouge-Genève

Tel: +45 63 12 83 00 | Email: ps@hymatik.com | www.hymatik.com | Hvidkaervej 27a, DK-5250 Odense SV, Denmark

General application valves 3/2 - Pilot operated

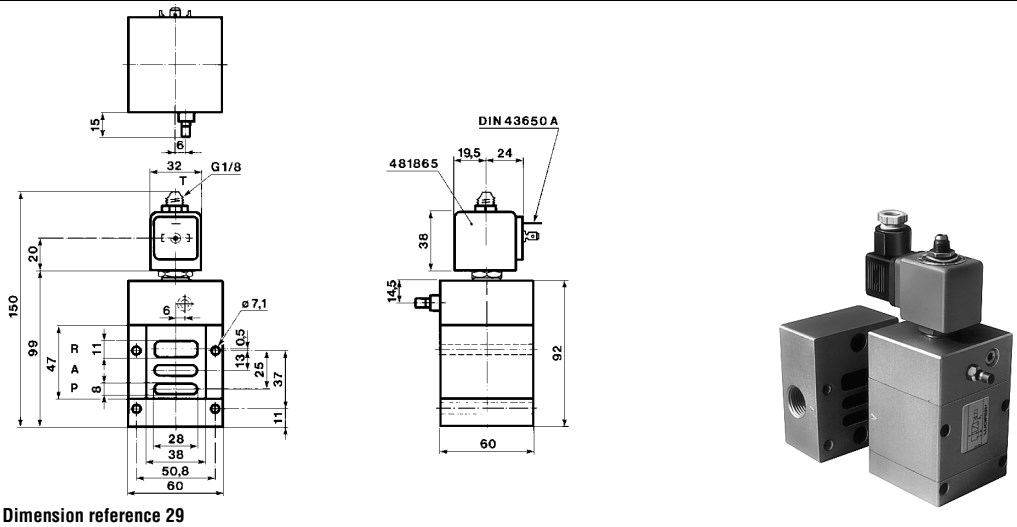

Dimension reference 29

Sub-base 485291

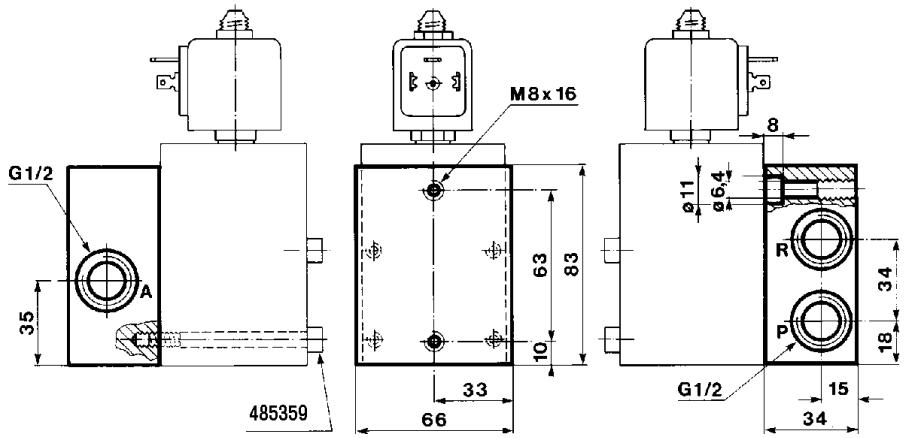

Associated sub-base diagram

Parker Lucifer SA
Fluid Control Division Europe
CH-1227 Carouge-Genève

Tel: +45 63 12 83 00 | Email: ps@hymatik.com | www.hymatik.com | Hvidkaervej 27a, DK-5250 Odense SV, Denmark

Electrical parts options with 3/2 general application valves for dry or lubricated air, neutral gases and liquids

El.part Group	Coil	Protection class	Protection class / Temperature class	Power DC	Power AC	Coil Order No.	Coil Ref. No.	Connection	Housing Order No.	Housing Ref. No.	Ambient temp. min.	Ambient temp. max.
1	**22 mm**	IP 65	**Class F**	2.5 W	2 W	DA01	**488980**	for DIN plug	A0	**8993**	-40	50
		IP 65	**Class F**	2.5 W	2 W	DA02	**481045**	with DIN plug	A0	**8993**	-40	50
		IP 65	**Class F**	5 W	4 W	DA03	**481180**	for DIN plug	A0	**8993**	-40	50
		IP 65	**Class F**	5 W	4 W	DA04	**481530**	with DIN plug	A0	**8993**	-40	50
		IP 65	**EEx m II T4**	5 W	4 W	VA01	**482605**	with 1500mm cable	00	**-**	-40	50
		IP 65	**EEx m II T5**	2.5 W	2 W	VA02	**482606**	with 1500mm cable	00	**-**	-40	50
2	**32 mm** (Std)	IP 65	**Class F**	9 W	8 W	DZ02	**481865**	for DIN plug	N1	**2995**	-40	50
		IP 65		9 W	8 W	DZ03	**482725**	with DIN plug	N1	**2995**	-40	50
		IP 65	**Class H**	9 W	8 W	DZ04	**492453**	for DIN plug	N1	**2995**	-40	50
		IP 65		9 W	8 W	DZ05	**492726**	with DIN plug	N1	**2995**	-40	50
		IP 65	**Class F, 50/60 Hz**	-	9 W	DZ06	**483510**	for DIN plug	N1	**2995**	-40	50
		IP 65		-	9 W	DZ07	**482635**	with DIN plug	N1	**2995**	-40	50
		IP 65	**EEx m II T4**	9 W	8 W	HZ05	**492670**	with 3000mm cable	00	**-**	-40	40
		IP 65	**Class H**	14 W	14 W	DZ08	**492425**	for DIN plug	N1	**2995**	-40	50
		IP 65		14 W	14 W	DZ09	**492727**	with DIN plug	N1	**2995**	-40	50
	50 mm (Std)	IP10 / IP 44	**Class F**	8 W	8 W	EZ01	**481000**	screw-terminals	E0	**4270**	-40	50
		IP10 / IP 44	**Class H**	8 W	8 W	EZ02	**485100**	screw-terminals	E0	**4270**	-40	50
		IP10 / IP 44	**Class H**	14 W	14 W	EZ92	**486265**	screw-terminals	E0	**4270**	-40	50
		IP 67	**Class F, M20x1.5**	8 W	8 W	EZ01	**481000**	screw-terminals	G1	**4538**	-40	50
		IP 65	**EEx m II T5/T4**	9 W	8 W	VZ01	**492070**	with 1500mm cable	00	**-**	-40	40/65
		IP 67	**EEx me II T4**	8 W	8 W	HZ06	**483371**	for cable connection	00	**-**	-40	65
		IP 66	**EEx me II T3/T4**	11 W	9 W	VZ03	**492190**	for cable connection	00	**-**	-40	75/40
3	**32 mm**	IP 65	**Class H**	-	14 W	DZ08	**492425**	for DIN plug	N1	**2995**	-40	50
4	**50 mm (impulse)**	IP10 / IP 44	**Class F**	-	11 W	MZ01	**484990**	screw-terminals	E1	**4269**	-40	50
		IP10 / IP 44	**Class F**	13 W	-	MZ02	**485400**	screw-terminals	E1	**4269**	-40	50
5	**50 mm**	IP 54	**EEx d IIC T4/T5/T6**	8 W	8 W	HZ08	**483250**	for cable 1/2 NPT	00	**-**	-40	80/75/60
6	**32 mm (Miniwatt)**	IP 65	**Class F**	1.6 W	-	DZ10	**482740**	for DIN plug	N1	**2995**	-40	50
		IP 65	**Class F**	1.6W	-	DZ11	**482745**	with DIN plug	N1	**2995**	-40	50
	50 mm (Miniwatt)	IP 67	**EEx me II T5**	2.5 W	-	VZ04	**491117**	for cable connection	00	**-**	-40	65
		IP 67	**EEx m II T5/T4**	2.5 W	2.5 W	VZ05	**492370**	with 1500mm cable	00	**-**	-40	40/65
		IP 66	**EEx me II T6/T5**	2.5 W	2.5 W	VZ06	**492390**	for cable connection	00	**-**	-40	40/75
7	**32 mm**	IP 65	**EEx ia II C T6**	0.4 W	-	DZ12	**483580.01**	for DIN plug	N1	**2995**	-40	55
		IP 65		0.4 W	-	DZ13	**483960.01**	with DIN plug	N1	**2995**	-40	55
	50 mm	IP 66	**EEx ia II C T6**	0.4 W	-	VZ07	**488650.01**	for cable connection	00	**-**	-40	65
		IP 67		0.4 W	-	VZ08	**488660.01**	with 2000mm cable	00	**-**	-40	65
		IP 65		0.4 W	-	VZ09	**488670.01**	with DIN plug	00	**-**	-40	65

Note: This table is indicative only. Please contact your distributor to confirm your selection.

Parker Lucifer SA
Fluid Control Division Europe
CH-1227 Carouge-Genève

Tel: +45 63 12 83 00 | Email: ps@hymatik.com | www.hymatik.com | Hvidkaervej 27a, DK-5250 Odense SV, Denmark

Miniature valves (3-way direct operated) 3/2

ACTUATION	BODY MATERIAL	FUNCTION	CONNECTION	ORIFICE (MM)	MAX. PRESSURE (BAR)	PAGE
Direct operated	Brass body	Normally closed	1/8	.3 to 4	14.0	162
		Normally open	1/8	.8 to 4	11.2	162
		Universal	1/8	.8 to 4	10.5	164
		Diverting	1/8	.8 to 4	16.0	166
	303 Stainless steel body	Normally closed	1/8	.3 to 4	14.0	166
		Normally open	1/8	.8 to 4	11.2	168
		Universal	1/8	.8 to 4	10.5	168
		Diverting	1/8	.8 to 4	16.0	170
	Aluminium alloy body	Normally closed	SB	1.2 to 1.6	10.5	170
		Normally open	SB	1.2 to 1.6	8.75	170
		Universal	SB	1.2 to 1.6	7.0	170
		Diverting	SB	1.2 to 1.6	11.2	172

Notes:
Direct operated valves: pressure range from 0 to max pressure.

Parker Lucifer SA
Fluid Control Division Europe
CH-1227 Carouge-Genève

Miniature valves (3-way direct operated)

3/2

Applications

The Miniature Series is a small size and low power consumption valve line. It is available in 2-way (normally closed and normally open) and 3-way (normally closed and normally open) versions. These valves are equipped with integrated molded coils with tab or lead termination.

Direct operated

Port size	Orifice (mm)	Flow factors (L/min)			Admissible differential pressure bar			Fluid temp. °C			Seat disc	Reference numbers				Power consumption (W)		Wt. (g)	Dim ref.
		Liquids		Gases	Min	Max		Gas	Liquid	Oil		Global valve reference	Valve reference	Housing	Coil	DC	AC		
G		kv	Qmax	Qn		DC	AC												

Brass body/Pipe mounting

Normally closed

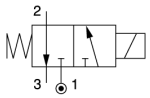

1/8	0.3	0.43	-	-	0	14	14	50	50	50	FKM	3131BBN1AV00	-	**N0**	**M1S1**	4.5	4.5	-	100
	0.3	0.43	-	-	0	14	14	50	50	50	FKM			**N0**	**M3J5**	4.5	4.5	-	
	1.2	0.72	-	-	0	10.5	10.5	50	50	50	FKM	3131BBN1EV00	-	**N0**	**M1S1**	4.5	4.5	-	100
	1.2	0.72	-	-	0	10.5	10.5	50	50	50	FKM			**N0**	**M3J5**	4.5	4.5	-	
	1.6	1.29	-	-	0	7	7	50	50	50	FKM	3131BBN1GV00	-	**N0**	**M1S1**	4.5	4.5	-	100
	1.6	1.29	-	-	0	7	7	50	50	50	FKM			**N0**	**M3J5**	4.5	4.5	-	
	2	1.86	-	-	0	5.6	5.6	50	50	50	FKM	3131BBN1JV00	-	**N0**	**M1S1**	4.5	4.5	-	100
	2	1.86	-	-	0	5.6	5.6	50	50	50	FKM			**N0**	**M3J5**	4.5	4.5	-	
	2	1.86	-	-	0	3.5	3.5	50	50	50	FKM	3931BBN1JV00	-	**N0**	**M4S1**	2.5	2.5	-	100
	2	1.86	-	-	0	3.5	3.5	50	50	50	FKM			**N0**	**M6J5**	2.5	2.5	-	
	2.4	2.57	-	-	0	4.2	4.2	50	50	50	FKM	3131BBN1LV00	-	**N0**	**M1S1**	4.5	4.5	-	100
	2.4	2.57	-	-	0	4.2	4.2	50	50	50	FKM			**N0**	**M3J5**	4.5	4.5	-	
	2.4	2.57	-	-	0	2.45	2.45	50	50	50	FKM	3931BBN1LV00	-	**N0**	**M4S1**	2.5	2.5	-	100
	2.4	2.57	-	-	0	2.45	2.45	50	50	50	FKM			**N0**	**M6J5**	2.5	2.5	-	
	3.2	3.43	-	-	0	2.8	2.8	50	50	50	FKM	3131BBN1NV00	-	**N0**	**M1S1**	4.5	4.5	-	100
	3.2	3.43	-	-	0	2.8	2.8	50	50	50	FKM			**N0**	**M3J5**	4.5	4.5	-	
	3.2	3.43	-	-	0	1.4	1.4	50	50	50	FKM	3931BBN1NV00	-	**N0**	**M4S1**	2.5	2.5	-	100
	3.2	3.43	-	-	0	1.4	1.4	50	50	50	FKM			**N0**	**M6J5**	2.5	2.5	-	
	4	4.3	-	-	0	0.7	0.7	50	50	50	FKM	3131BBN1QV00	-	**N0**	**M1S1**	4.5	4.5	-	100
	4	4.3	-	-	0	0.7	0.7	50	50	50	FKM			**N0**	**M3J5**	4.5	4.5	-	
	4	4.3	-	-	0	0.7	0.7	50	50	50	FKM	3931BBN1QV00	-	**N0**	**M4S1**	2.5	2.5	-	100
	4	4.3	-	-	0	0.7	0.7	50	50	50	FKM			**N0**	**M6J5**	2.5	2.5	-	

Brass body/Pipe mounting

Normally open

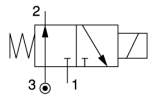

1/8	0.8	0.43	-	-	0	11.2	11.2	50	50	50	FKM	3139BBN1AV00	-	**N0**	**M1S1**	4.5	4.5	-	100
	0.8	0.43	-	-	0	11.2	11.2	50	50	50	FKM			**N0**	**M3J5**	4.5	4.5	-	

Table continued on page 164

Parker Lucifer SA
Fluid Control Division Europe
CH-1227 Carouge-Genève

Tel: +45 63 12 83 00 | Email: ps@hymatik.com | www.hymatik.com | Hvidkaervej 27a, DK-5250 Odense SV, Denmark

Miniature valves 3/2 - Direct operated

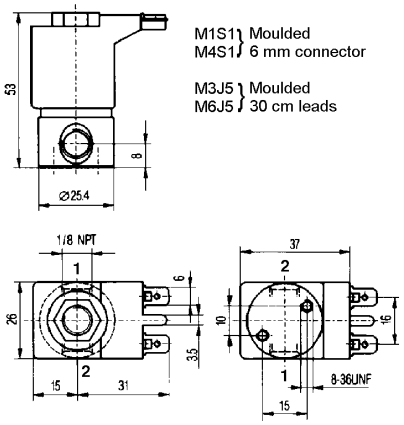



Dimension reference 100

Parker Lucifer SA
Fluid Control Division Europe
CH-1227 Carouge-Genève

Miniature valves 3/2 - Direct operated

Brass body/Pipe mounting

Normally open

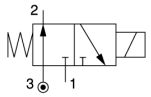

Port size G	Orifice (mm)	Flow factors (L/min) Liquids kv	Liquids Qmax	Gases Qn	Admissible differential pressure bar Min	Max DC	Max AC	Fluid temp. °C Gas	Liquid	Oil	Seat disc	Reference numbers Global valve reference	Valve reference	Housing	Coil	Power consumption (W) DC	AC	Wt. (g)	Dim ref.
1/8	1.2	0.72	-	-	0	8.75	8.75	50	50	50	FKM	3139BBN1EV00	-	NO	M1S1	4.5	4.5	-	100
	1.2	0.72	-	-	0	8.75	8.75	50	50	50	FKM			NO	M3J5	4.5	4.5	-	
	1.6	1.29	-	-	0	7	7	50	50	50	FKM	3139BBN1GV00	-	NO	M1S1	4.5	4.5	-	100
	1.6	1.29	-	-	0	7	7	50	50	50	FKM			NO	M3J5	4.5	4.5	-	
	2	1.86	-	-	0	5.6	5.6	50	50	50	FKM	3139BBN1JV00	-	NO	M1S1	4.5	4.5	-	100
	2	1.86	-	-	0	5.6	5.6	50	50	50	FKM			NO	M3J5	4.5	4.5	-	
	2.4	2.57	-	-	0	4.2	4.2	50	50	50	FKM	3139BBN1LV00	-	NO	M1S1	4.5	4.5	-	100
	2.4	2.57	-	-	0	4.2	4.2	50	50	50	FKM			NO	M3J5	4.5	4.5	-	
	3.2	3.43	-	-	0	2.8	2.8	50	50	50	FKM	3139BBN1NV00	-	NO	M1S1	4.5	4.5	-	100
	3.2	3.43	-	-	0	2.8	2.8	50	50	50	FKM			NO	M3J5	4.5	4.5	-	
	4	4.3	-	-	0	0.7	0.7	50	50	50	FKM	3139BBN1QV00	-	NO	M1S1	4.5	4.5	-	100
	4	4.3	-	-	0	0.7	0.7	50	50	50	FKM			NO	M3J5	4.5	4.5	-	

Brass body/Pipe mounting

Universal

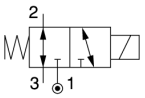

1/8	0.8	0.43	-	-	0	10.5	10.5	50	50	50	FKM	3133BBN1AV00	-	NO	M1S1	4.5	4.5	-	100
	0.8	0.43	-	-	0	10.5	10.5	50	50	50	FKM			NO	M3J5	4.5	4.5	-	
	0.8	0.43	-	-	0	6.6	6.6	50	50	50	FKM	3933BBN1AV00	-	NO	M4S1	2.5	2.5	-	100
	0.8	0.43	-	-	0	6.6	6.6	50	50	50	FKM			NO	M6J5	2.5	2.5	-	
	1.2	0.72	-	-	0	7	7	50	50	50	FKM	3133BBN1EV00	-	NO	M1S1	4.5	4.5	-	100
	1.2	0.72	-	-	0	7	7	50	50	50	FKM			NO	M3J5	4.5	4.5	-	
	1.2	0.72	-	-	0	4.2	4.2	50	50	50	FKM	3933BBN1EV00	-	NO	M4S1	2.5	2.5	-	100
	1.2	0.72	-	-	0	4.2	4.2	50	50	50	FKM			NO	M6J5	2.5	2.5	-	
	1.6	1.29	-	-	0	5.6	5.6	50	50	50	FKM	3133BBN1GV00	-	NO	M1S1	4.5	4.5	-	100
	1.6	1.29	-	-	0	5.6	5.6	50	50	50	FKM			NO	M3J5	4.5	4.5	-	
	1.6	1.29	-	-	0	1.4	1.4	50	50	50	FKM	3933BBN1GV00	-	NO	M4S1	2.5	2.5	-	100
	1.6	1.29	-	-	0	1.4	1.4	50	50	50	FKM			NO	M6J5	2.5	2.5	-	
	2	1.86	-	-	0	4.2	4.2	50	50	50	FKM	3133BBN1JV00	-	NO	M1S1	4.5	4.5	-	100
	2	1.86	-	-	0	4.2	4.2	50	50	50	FKM			NO	M3J5	4.5	4.5	-	
	2	1.86	-	-	0	0.56	0.56	50	50	50	FKM	3933BBN1JV00	-	NO	M4S1	2.5	2.5	-	100
	2	1.86	-	-	0	0.56	0.56	50	50	50	FKM			NO	M6J5	2.5	2.5	-	
	2.4	2.57	-	-	0	2.45	2.45	50	50	50	FKM	3133BBN1LV00	-	NO	M1S1	4.5	4.5	-	100
	2.4	2.57	-	-	0	2.45	2.45	50	50	50	FKM			NO	M3J5	4.5	4.5	-	
	3.2	3.43	-	-	0	1.4	1.4	50	50	50	FKM	3133BBN1NV00	-	NO	M1S1	4.5	4.5	-	100
	3.2	3.43	-	-	0	1.4	1.4	50	50	50	FKM			NO	M3J5	4.5	4.5	-	
	4	4.3	-	-	0	0.7	0.7	50	50	50	FKM	3133BBN1QV00	-	NO	M1S1	4.5	4.5	-	100
	4	4.3	-	-	0	0.7	0.7	50	50	50	FKM			NO	M3J5	4.5	4.5	-	

Table continued on page 166

Parker Lucifer SA
Fluid Control Division Europe
CH-1227 Carouge-Genève

Miniature valves 3/2 - Direct operated

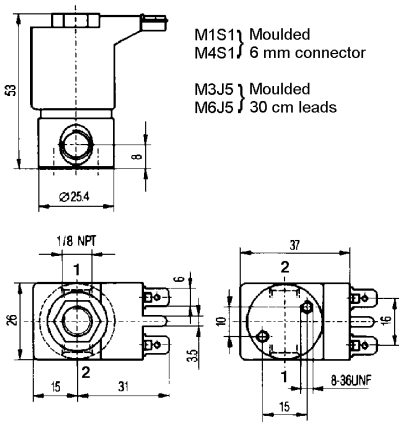



Dimension reference 100

Parker Lucifer SA
Fluid Control Division Europe
CH-1227 Carouge-Genève

Miniature valves 3/2 - Direct operated

Brass body/Pipe mounting

Diverting

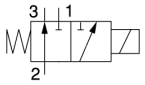

Port size G	Orifice (mm)	Flow factors (L/min) Liquids kv	Liquids Qmax	Gases Qn	Admissible differential pressure bar Min	Max DC	Max AC	Fluid temp. °C Gas	Liquid	Oil	Seat disc	Reference numbers Global valve reference	Valve reference	Housing	Coil	Power consumption (W) DC	AC	Wt. (g)	Dim ref.
1/8	0.8	0.43	-	-	0	16	16	50	50	50	FKM	3138BBN1AV00	-	**NO**	**M1S1**	4.5	4.5	-	100
	0.8	0.43	-	-	0	16	16	50	50	50	FKM			**NO**	**M3J5**	4.5	4.5	-	
	1.2	0.72	-	-	0	11.2	11.2	50	50	50	FKM	3138BBN1EV00	-	**NO**	**M1S1**	4.5	4.5	-	100
	1.2	0.72	-	-	0	11.2	11.2	50	50	50	FKM			**NO**	**M3J5**	4.5	4.5	-	
	1.6	1.29	-	-	0	8.4	8.4	50	50	50	FKM	3138BBN1GV00	-	**NO**	**M1S1**	4.5	4.5	-	100
	1.6	1.29	-	-	0	8.4	8.4	50	50	50	FKM			**NO**	**M3J5**	4.5	4.5	-	
	2	1.86	-	-	0	5.6	5.6	50	50	50	FKM	3138BBN1JV00	-	**NO**	**M1S1**	4.5	4.5	-	100
	2	1.86	-	-	0	5.6	5.6	50	50	50	FKM			**NO**	**M3J5**	4.5	4.5	-	
	2.4	2.57	-	-	0	4.2	4.2	50	50	50	FKM	3138BBN1LV00	-	**NO**	**M1S1**	4.5	4.5	-	100
	2.4	2.57	-	-	0	4.2	4.2	50	50	50	FKM			**NO**	**M3J5**	4.5	4.5	-	
	3.2	3.43	-	-	0	2.45	2.45	50	50	50	FKM	3138BBN1NV00	-	**NO**	**M1S1**	4.5	4.5	-	100
	3.2	3.43	-	-	0	2.45	2.45	50	50	50	FKM			**NO**	**M3J5**	4.5	4.5	-	
	4	4.3	-	-	0	1.4	1.4	50	50	50	FKM	3138BBN1QV00	-	**NO**	**M1S1**	4.5	4.5	-	100
	4	4.3	-	-	0	1.4	1.4	50	50	50	FKM			**NO**	**M3J5**	4.5	4.5	-	

303 Stainless steel body/Pipe mounting

Normally closed

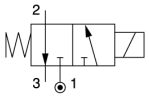

Port size G	Orifice (mm)	Flow factors (L/min) Liquids kv	Liquids Qmax	Gases Qn	Admissible differential pressure bar Min	Max DC	Max AC	Fluid temp. °C Gas	Liquid	Oil	Seat disc	Reference numbers Global valve reference	Valve reference	Housing	Coil	Power consumption (W) DC	AC	Wt. (g)	Dim ref.
1/8	0.3	0.43	-	-	0	14	14	50	50	50	FKM	3131BSN1AV00	-	**NO**	**M1S1**	4.5	4.5	-	100
	0.3	0.43	-	-	0	14	14	50	50	50	FKM			**NO**	**M3J5**	4.5	4.5	-	
	1.2	0.72	-	-	0	10.5	10.5	50	50	50	FKM	3131BSN1EV00	-	**NO**	**M1S1**	4.5	4.5	-	100
	1.2	0.72	-	-	0	10.5	10.5	50	50	50	FKM			**NO**	**M3J5**	4.5	4.5	-	
	1.6	1.29	-	-	0	7	7	50	50	50	FKM	3131BSN1GV00	-	**NO**	**M1S1**	4.5	4.5	-	100
	1.6	1.29	-	-	0	7	7	50	50	50	FKM			**NO**	**M3J5**	4.5	4.5	-	
	2	1.86	-	-	0	5.6	5.6	50	50	50	FKM	3131BSN1JV00	-	**NO**	**M1S1**	4.5	4.5	-	100
	2	1.86	-	-	0	5.6	5.6	50	50	50	FKM			**NO**	**M3J5**	4.5	4.5	-	
	2	1.86	-	-	0	3.5	3.5	50	50	50	FKM	3931BSN1JV00	-	**NO**	**M4S1**	2.5	2.5	-	100
	2	1.86	-	-	0	3.5	3.5	50	50	50	FKM			**NO**	**M6J5**	2.5	2.5	-	
	2.4	2.57	-	-	0	4.2	4.2	50	50	50	FKM	3131BSN1LV00	-	**NO**	**M1S1**	4.5	4.5	-	100
	2.4	2.57	-	-	0	4.2	4.2	50	50	50	FKM			**NO**	**M3J5**	4.5	4.5	-	
	2.4	2.57	-	-	0	2.45	2.45	50	50	50	FKM	3931BSN1LV00	-	**NO**	**M4S1**	2.5	2.5	-	100
	2.4	2.57	-	-	0	2.45	2.45	50	50	50	FKM			**NO**	**M6J5**	2.5	2.5	-	
	3.2	3.43	-	-	0	2.8	2.8	50	50	50	FKM	3131BSN1NV00	-	**NO**	**M1S1**	4.5	4.5	-	100
	3.2	3.43	-	-	0	2.8	2.8	50	50	50	FKM			**NO**	**M3J5**	4.5	4.5	-	
	3.2	3.43	-	-	0	1.4	1.4	50	50	50	FKM	3931BSN1NV00	-	**NO**	**M4S1**	2.5	2.5	-	100
	3.2	3.43	-	-	0	1.4	1.4	50	50	50	FKM			**NO**	**M6J5**	2.5	2.5	-	
	4	4.3	-	-	0	0.7	0.7	50	50	50	FKM	3131BSN1QV00	-	**NO**	**M1S1**	4.5	4.5	-	100
	4	4.3	-	-	0	0.7	0.7	50	50	50	FKM			**NO**	**M3J5**	4.5	4.5	-	
	4	4.3	-	-	0	0.7	0.7	50	50	50	FKM	3931BSN1QV00	-	**NO**	**M4S1**	2.5	2.5	-	100
	4	4.3	-	-	0	0.7	0.7	50	50	50	FKM			**NO**	**M6J5**	2.5	2.5	-	

Table continued on page 168

Parker Lucifer SA
Fluid Control Division Europe
CH-1227 Carouge-Genève

Tel: +45 63 12 83 00 | Email: ps@hymatik.com | www.hymatik.com | Hvidkaervej 27a, DK-5250 Odense SV, Denmark

Miniature valves 3/2 - Direct operated

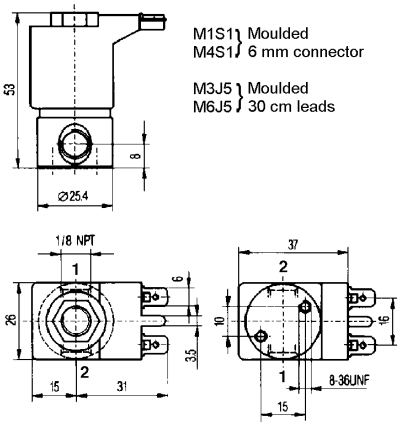



Dimension reference 100

Parker Lucifer SA
Fluid Control Division Europe
CH-1227 Carouge-Genève

Miniature valves 3/2 - Direct operated

Port size	Orifice (mm)	Flow factors (L/min)			Admissible differential pressure bar			Fluid temp. °C			Seat disc	Reference numbers				Power consumption (W)		Wt. (g)	Dim ref.
		Liquids		Gases	Min	Max		Gas	Liquid	Oil		Global valve reference	Valve reference	Housing	Coil	DC	AC		
G		kv	Qmax	Qn		DC	AC												

303 Stainless steel body/Pipe mounting

Normally open

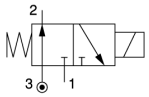

1/8	0.8	0.43	-	-	0	11.2	11.2	50	50	50	FKM	3139BSN1AV00	-	**NO**	**M1S1**	4.5	4.5	-	100
	0.8	0.43	-	-	0	11.2	11.2	50	50	50	FKM			**NO**	**M3J5**	4.5	4.5	-	
	1.2	0.72	-	-	0	8.75	8.75	50	50	50	FKM	3139BSN1EV00	-	**NO**	**M1S1**	4.5	4.5	-	100
	1.2	0.72	-	-	0	8.75	8.75	50	50	50	FKM			**NO**	**M3J5**	4.5	4.5	-	
	1.6	1.29	-	-	0	7	7	50	50	50	FKM	3139BSN1GV00	-	**NO**	**M1S1**	4.5	4.5	-	100
	1.6	1.29	-	-	0	7	7	50	50	50	FKM			**NO**	**M3J5**	4.5	4.5	-	
	2	1.86	-	-	0	5.6	5.6	50	50	50	FKM	3139BSN1JV00	-	**NO**	**M1S1**	4.5	4.5	-	100
	2	1.86	-	-	0	5.6	5.6	50	50	50	FKM			**NO**	**M3J5**	4.5	4.5	-	
	2.4	2.57	-	-	0	4.2	4.2	50	50	50	FKM	3139BSN1LV00	-	**NO**	**M1S1**	4.5	4.5	-	100
	2.4	2.57	-	-	0	4.2	4.2	50	50	50	FKM			**NO**	**M3J5**	4.5	4.5	-	
	3.2	3.43	-	-	0	2.8	2.8	50	50	50	FKM	3139BSN1NV00	-	**NO**	**M1S1**	4.5	4.5	-	100
	3.2	3.43	-	-	0	2.8	2.8	50	50	50	FKM			**NO**	**M3J5**	4.5	4.5	-	
	4	4.3	-	-	0	0.7	0.7	50	50	50	FKM	3139BSN1QV00	-	**NO**	**M1S1**	4.5	4.5	-	100
	4	4.3	-	-	0	0.7	0.7	50	50	50	FKM			**NO**	**M3J5**	4.5	4.5	-	

303 Stainless steel body/Pipe mounting

Universal

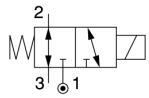

1/8	0.8	0.43	-	-	0	10.5	10.5	50	50	50	FKM	3133BSN1AV00	-	**NO**	**M1S1**	4.5	4.5	-	100
	0.8	0.43	-	-	0	10.5	10.5	50	50	50	FKM			**NO**	**M3J5**	4.5	4.5	-	
	0.8	0.43	-	-	0	6.6	6.6	50	50	50	FKM	3933BSN1AV00	-	**NO**	**M4S1**	2.5	2.5	-	100
	0.8	0.43	-	-	0	6.6	6.6	50	50	50	FKM			**NO**	**M6J5**	2.5	2.5	-	
	1.2	0.72	-	-	0	7	7	50	50	50	FKM	3133BSN1EV00	-	**NO**	**M1S1**	4.5	4.5	-	100
	1.2	0.72	-	-	0	7	7	50	50	50	FKM			**NO**	**M3J5**	4.5	4.5	-	
	1.2	0.72	-	-	0	4.2	4.2	50	50	50	FKM	3933BSN1EV00	-	**NO**	**M4S1**	2.5	2.5	-	100
	1.2	0.72	-	-	0	4.2	4.2	50	50	50	FKM			**NO**	**M6J5**	2.5	2.5	-	
	1.6	1.29	-	-	0	5.6	5.6	50	50	50	FKM	3133BSN1GV00	-	**NO**	**M1S1**	4.5	4.5	-	100
	1.6	1.29	-	-	0	5.6	5.6	50	50	50	FKM			**NO**	**M3J5**	4.5	4.5	-	
	1.6	1.29	-	-	0	1.4	1.4	50	50	50	FKM	3933BSN1GV00	-	**NO**	**M4S1**	2.5	2.5	-	100
	1.6	1.29	-	-	0	1.4	1.4	50	50	50	FKM			**NO**	**M6J5**	2.5	2.5	-	
	2	1.86	-	-	0	4.2	4.2	50	50	50	FKM	3133BSN1JV00	-	**NO**	**M1S1**	4.5	4.5	-	100
	2	1.86	-	-	0	4.2	4.2	50	50	50	FKM			**NO**	**M3J5**	4.5	4.5	-	
	2	1.86	-	-	0	0.56	0.56	50	50	50	FKM	3933BSN1JV00	-	**NO**	**M4S1**	2.5	2.5	-	100
	2	1.86	-	-	0	0.56	0.56	50	50	50	FKM			**NO**	**M6J5**	2.5	2.5	-	
	2.4	2.57	-	-	0	2.45	2.45	50	50	50	FKM	3133BSN1LV00	-	**NO**	**M1S1**	4.5	4.5	-	100
	2.4	2.57	-	-	0	2.45	2.45	50	50	50	FKM			**NO**	**M3J5**	4.5	4.5	-	
	3.2	3.43	-	-	0	1.4	1.4	50	50	50	FKM	3133BSN1NV00	-	**NO**	**M1S1**	4.5	4.5	-	100
	3.2	3.43	-	-	0	1.4	1.4	50	50	50	FKM			**NO**	**M3J5**	4.5	4.5	-	
	4	4.3	-	-	0	0.7	0.7	50	50	50	FKM	3133BSN1QV00	-	**NO**	**M1S1**	4.5	4.5	-	100
	4	4.3	-	-	0	0.7	0.7	50	50	50	FKM			**NO**	**M3J5**	4.5	4.5	-	

Table continued on page 170

Parker Lucifer SA
Fluid Control Division Europe
CH-1227 Carouge-Genève

Tel: +45 63 12 83 00 | Email: ps@hymatik.com | www.hymatik.com | Hvidkaervej 27a, DK-5250 Odense SV, Denmark

Miniature valves 3/2 - Direct operated

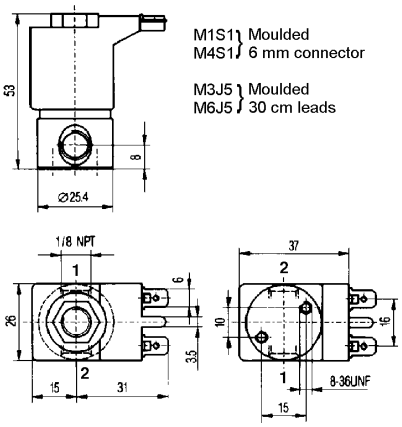



Dimension reference 100

Parker Lucifer SA
Fluid Control Division Europe
CH-1227 Carouge-Genève

Miniature valves 3/2 - Direct operated

Port size G	Orifice (mm)	Flow factors (L/min) Liquids kv	Liquids Qmax	Gases Qn	Admissible differential pressure bar Min	Max DC	Max AC	Fluid temp. °C Gas	Liquid	Oil	Seat disc	Reference numbers Global valve reference	Valve reference	Housing	Coil	Power consumption (W) DC	AC	Wt. (g)	Dim ref.

303 Stainless steel body/Pipe mounting

Diverting

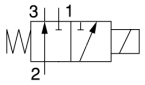

1/8	0.8	0.43	-	-	0	16	16	50	50	50	FKM	3138BSN1AV00	-	**NO**	**M1S1**	4.5	4.5	-	100
	0.8	0.43	-	-	0	16	16	50	50	50	FKM			**NO**	**M3J5**	4.5	4.5	-	
	1.2	0.72	-	-	0	11.2	11.2	50	50	50	FKM	3138BSN1EV00	-	**NO**	**M1S1**	4.5	4.5	-	100
	1.2	0.72	-	-	0	11.2	11.2	50	50	50	FKM			**NO**	**M3J5**	4.5	4.5	-	
	1.6	1.29	-	-	0	8.4	8.4	50	50	50	FKM	3138BSN1GV00	-	**NO**	**M1S1**	4.5	4.5	-	100
	1.6	1.29	-	-	0	8.4	8.4	50	50	50	FKM			**NO**	**M3J5**	4.5	4.5	-	
	2	1.86	-	-	0	5.6	5.6	50	50	50	FKM	3138BSN1JV00	-	**NO**	**M1S1**	4.5	4.5	-	100
	2	1.86	-	-	0	5.6	5.6	50	50	50	FKM			**NO**	**M3J5**	4.5	4.5	-	
	2.4	2.57	-	-	0	4.2	4.2	50	50	50	FKM	3138BSN1LV00	-	**NO**	**M1S1**	4.5	4.5	-	100
	2.4	2.57	-	-	0	4.2	4.2	50	50	50	FKM			**NO**	**M3J5**	4.5	4.5	-	
	3.2	3.43	-	-	0	2.45	2.45	50	50	50	FKM	3138BSN1NV00	-	**NO**	**M1S1**	4.5	4.5	-	100
	3.2	3.43	-	-	0	2.45	2.45	50	50	50	FKM			**NO**	**M3J5**	4.5	4.5	-	
	4	4.3	-	-	0	1.4	1.4	50	50	50	FKM	3138BSN1QV00	-	**NO**	**M1S1**	4.5	4.5	-	100
	4	4.3	-	-	0	1.4	1.4	50	50	50	FKM			**NO**	**M3J5**	4.5	4.5	-	

Aluminium alloy body/Sub-base mounting

Normally closed

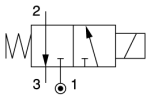

SB	1.2	0.72	-	-	0	10.5	10.5	50	50	50	FKM	3131BJA7EVC#	- 1	**NO**	**M1S1**	4.5	4.5	-	101
	1.2	0.72	-	-	0	10.5	10.5	50	50	50	FKM		1	**NO**	**M3J5**	4.5	4.5	-	
	1.6	1.29	-	-	0	7	7	50	50	50	FKM	3131BJA7GVC#	- 1	**NO**	**M1S1**	4.5	4.5	-	101
	1.6	1.29	-	-	0	7	7	50	50	50	FKM		1	**NO**	**M3J5**	4.5	4.5	-	

Aluminium alloy body/Sub-base mounting

Normally open

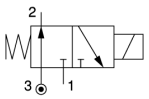

SB	1.2	0.72	-	-	0	8.75	8.75	50	50	50	FKM	3139BJA7EVC#	- 1	**NO**	**M1S1**	4.5	4.5	-	101
	1.2	0.72	-	-	0	8.75	8.75	50	50	50	FKM		1	**NO**	**M3J5**	4.5	4.5	-	
	1.6	1.29	-	-	0	7	7	50	50	50	FKM	3139BJA7GVC#	- 1	**NO**	**M1S1**	4.5	4.5	-	101
	1.6	1.29	-	-	0	7	7	50	50	50	FKM		1	**NO**	**M3J5**	4.5	4.5	-	

Aluminium alloy body/Sub-base mounting

Universal

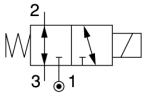

SB	1.2	0.72	-	-	0	7	7	50	50	50	FKM	3133BJA7EVC#	- 1	**NO**	**M1S1**	4.5	4.5	-	101
	1.2	0.72	-	-	0	7	7	50	50	50	FKM		1	**NO**	**M3J5**	4.5	4.5	-	
	1.2	0.72	-	-	0	4.2	4.2	50	50	50	FKM	3933BJA7EVC#	- 1	**NO**	**M4S1**	2.5	2.5	-	101
	1.2	0.72	-	-	0	4.2	4.2	50	50	50	FKM		1	**NO**	**M6J5**	2.5	2.5	-	
	1.6	1.29	-	-	0	5.6	5.6	50	50	50	FKM	3133BJA7GVC#	- 1	**NO**	**M1S1**	4.5	4.5	-	101
	1.6	1.29	-	-	0	5.6	5.6	50	50	50	FKM		1	**NO**	**M3J5**	4.5	4.5	-	

Table continued on page 172

Notes:

1. # Denotes the number of valves in the manifold, from 2 to 4

Parker Lucifer SA
Fluid Control Division Europe
CH-1227 Carouge-Genève

Miniature valves 3/2 - Direct operated

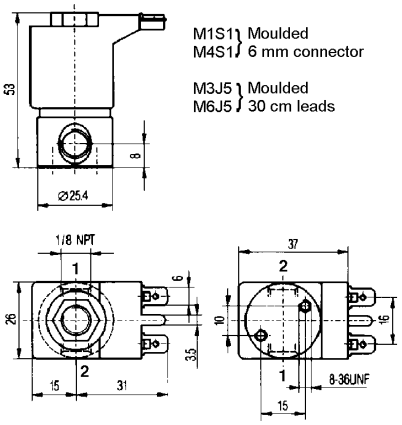



Dimension reference 100

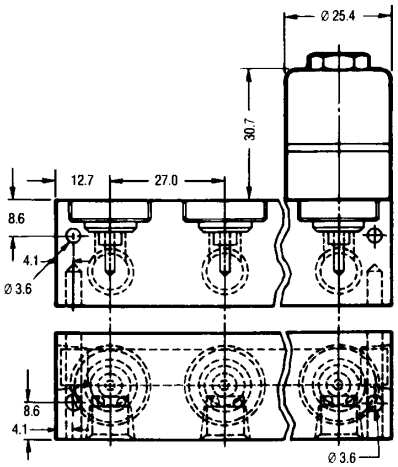

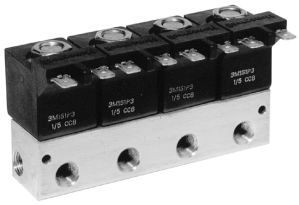

Dimension reference 101

Parker Lucifer SA
Fluid Control Division Europe
CH-1227 Carouge-Genève

Miniature valves 3/2 - Direct operated

Port size G	Orifice (mm)	Flow factors (L/min) Liquids kv	Liquids Qmax	Gases Qn	Admissible differential pressure bar Min	Max DC	Max AC	Fluid temp. °C Gas	Liquid	Oil	Seat disc	Reference numbers Global valve reference	Valve reference	Housing	Coil	Power consumption (W) DC	AC	Wt. (g)	Dim ref.
Aluminium alloy body/Sub-base mounting																			
SB	1.6	1.29	-	-	0	1.4	1.4	50	50	50	FKM	3933BJA7GVC#	- 1	**NO**	**M4S1**	2.5	2.5	-	101
	1.6	1.29	-	-	0	1.4	1.4	50	50	50	FKM		1	**NO**	**M6J5**	2.5	2.5	-	
Aluminium alloy body/Sub-base mounting																			
SB	1.2	0.72	-	-	0	11.2	11.2	50	50	50	FKM	3138BJA7EVC#	- 1	**NO**	**M1S1**	4.5	4.5	-	101
	1.2	0.72	-	-	0	11.2	11.2	50	50	50	FKM		1	**NO**	**M3J5**	4.5	4.5	-	
	1.6	1.29	-	-	0	8.4	8.4	50	50	50	FKM	3138BJA7GVC#	- 1	**NO**	**M1S1**	4.5	4.5	-	101
	1.6	1.29	-	-	0	8.4	8.4	50	50	50	FKM		1	**NO**	**M3J5**	4.5	4.5	-	

Universal

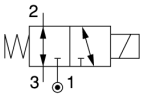

Diverting

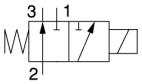

Notes:

1. # Denotes the number of valves in the manifold, from 2 to 4

Parker Lucifer SA
Fluid Control Division Europe
CH-1227 Carouge-Genève

Miniature valves 3/2 - Direct operated

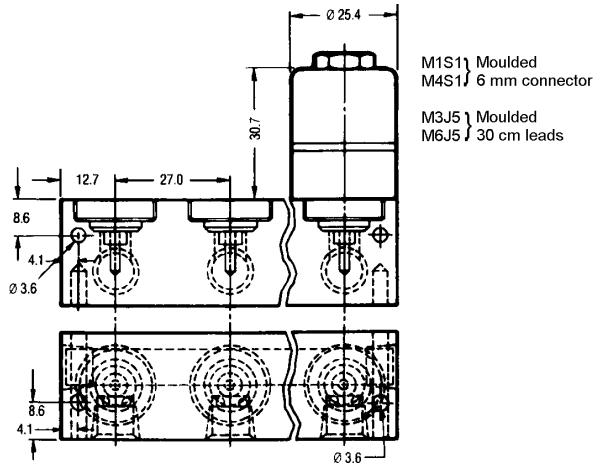

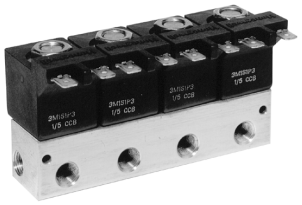

Dimension reference 101

Parker Lucifer SA
Fluid Control Division Europe
CH-1227 Carouge-Genève

Parker Lucifer SA
Fluid Control Division Europe
CH-1227 Carouge-Genève

Valves for oil (hydraulic) and neutral liquids applications (max. 75 bar) 3/2

ACTUATION	BODY MATERIAL	FUNCTION	CONNECTION	ORIFICE (MM)	MAX. PRESSURE (BAR)	PAGE
Direct operated	Brass body	Normally closed	1/4	0.8	75.0	176
		Universal	1/4	0.8	30.0	176
	303 Stainless steel body	Normally closed	1/4	0.8	40.0	176
Pilot operated	Anod. aluminium body	Normally closed	1/4	8	40.0	178
		Normally open	1/4	8	40.0	178

Notes:
Direct operated valves: pressure range from 0 to max pressure.
Pilot operated valves: pressure range from 0.3 to 0.5 bar to max. pressure (refer to tables).

Parker Lucifer SA
Fluid Control Division Europe
CH-1227 Carouge-Genève

Valves for oil (hydraulic) and neutral liquids applications (max. 75 bar)

3/2

Direct operated

Brass body/Pipe mounting

Normally closed

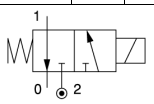

Port size G	Orifice (mm)	Flow factors (L/min) kv	Flow factors (L/min) Qmax	Admissible differential pressure bar Min	Admissible differential pressure bar Max DC	Admissible differential pressure bar Max AC	Fluid temp. °C	Seat disc	Reference numbers Global valve reference	Reference numbers Valve reference no.	Reference numbers Housing	Reference numbers OR Coil	Power consumption (W) DC	Power consumption (W) AC	Wt. (g)	El. Part Group *	Dim ref.
1/4	0.8	0.3	2	0	40	40	75	PCTFE	7131KBG2BF00	**131K05**	**4270**	**481000**	8	8	430	2	17
	0.8	0.3	2.5	0	-	75	130	Ruby	7131KBG2BR00	**131K65**	**4270**	**481000**	-	8	430	2	17
	0.8	0.3	2.5	0	75	-	140	Ruby			**4270**	**486265**	14	-	440	2	

Brass body/Pipe mounting

Universal

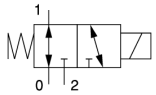

1/4	0.8	0.3	1.6	0	30	30	100	FKM	7133KBG2BV00	**E133K05**	**2995**	**481865**	9	8	310	2	17
	0.8	0.3	1.6	0	30	30	120	FKM			**4270**	**481000**	8	8	430	2	

303 Stainless steel body/Pipe mounting

Normally closed

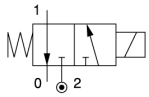

1/4	0.8	0.3	2	0	40	40	100	Ruby	7131WVG2BR00	**131V65**	**2995**	**481865**	9	8	410	2	16

Notes:

* See Electrical Parts Group table at end of section

Parker Lucifer SA
Fluid Control Division Europe
CH-1227 Carouge-Genève

Valves for oil (hydraulic) and neutral liquids 3/2 - Direct operated

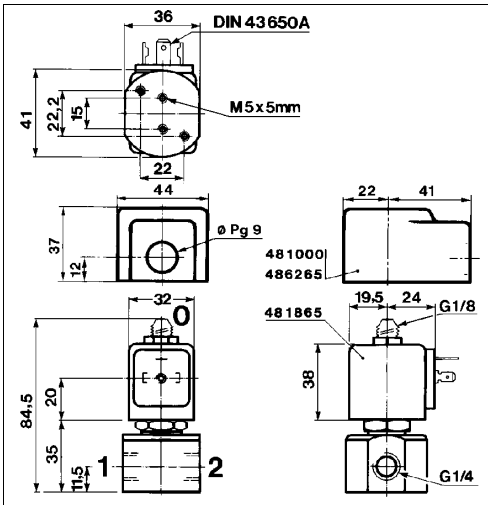



Dimension reference 16

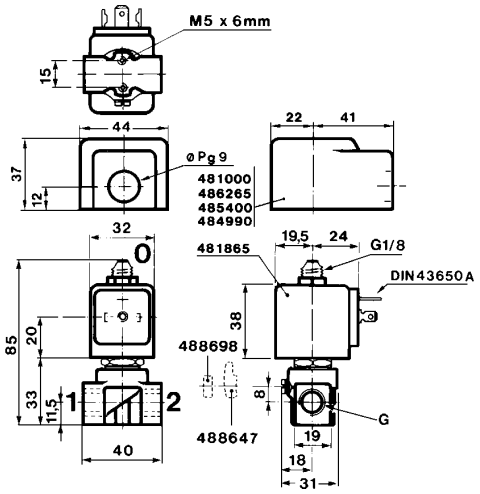

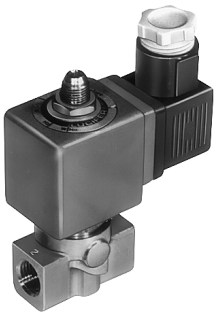

Dimension reference 17

Parker Lucifer SA
Fluid Control Division Europe
CH-1227 Carouge-Genève

Valves for oil (hydraulic) and neutral liquids applications (max. 75 bar)

3/2

Pilot operated

Port size G	Orifice (mm)	Flow factors (L/min) kv	Qmax	Admissible differential pressure bar Min	Max DC	Max AC	Fluid temp. °C	Seat disc	Reference numbers Global valve reference	Valve reference no.	Housing	OR Coil	Power consumption (W) DC	AC	Wt. (g)	El. Part Group *	Dim ref.

Anod. aluminium body/Pipe mounting

Normally closed

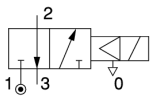

1/4	8	10	10	1	40	40	75	NBR	7331BAG2KN00	**331B02** 1	**2995**	**481865**	9	8	880	2	23
	8	10	10	1	40	40	75	NBR			**4270**	**481000**	8	8	1000	2	

Anod. aluminium body/Pipe mounting

Normally open

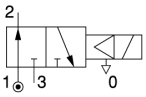

1/4	8	10	10	1	40	40	75	NBR	7332BAG2KN00	**332B02** 1	**2995**	**481865**	9	8	880	2	25
	8	10	10	1	40	40	75	NBR			**4270**	**481000**	8	8	1000	2	

Notes:

* See Electrical Parts Group table at end of section

1. Pilot seat discs from Kel-F (PCTFE); valve with pilot return pipe

Parker Lucifer SA
Fluid Control Division Europe
CH-1227 Carouge-Genève

Tel: +45 63 12 83 00 | Email: ps@hymatik.com | www.hymatik.com | Hvidkaervej 27a, DK-5250 Odense SV, Denmark

Valves for oil (hydraulic) and neutral liquids 3/2 - Pilot operated

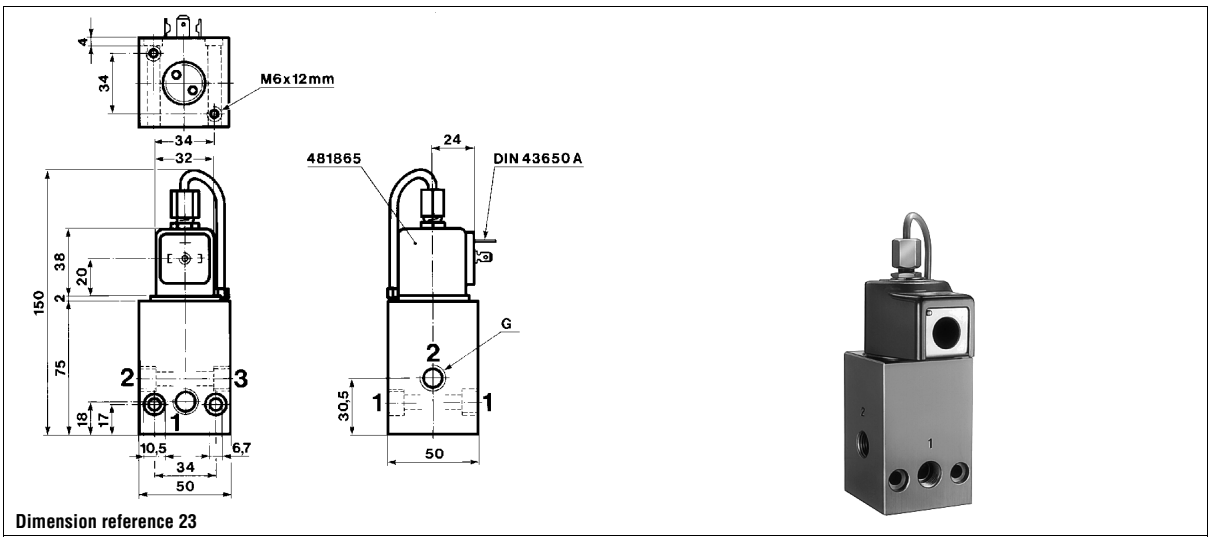

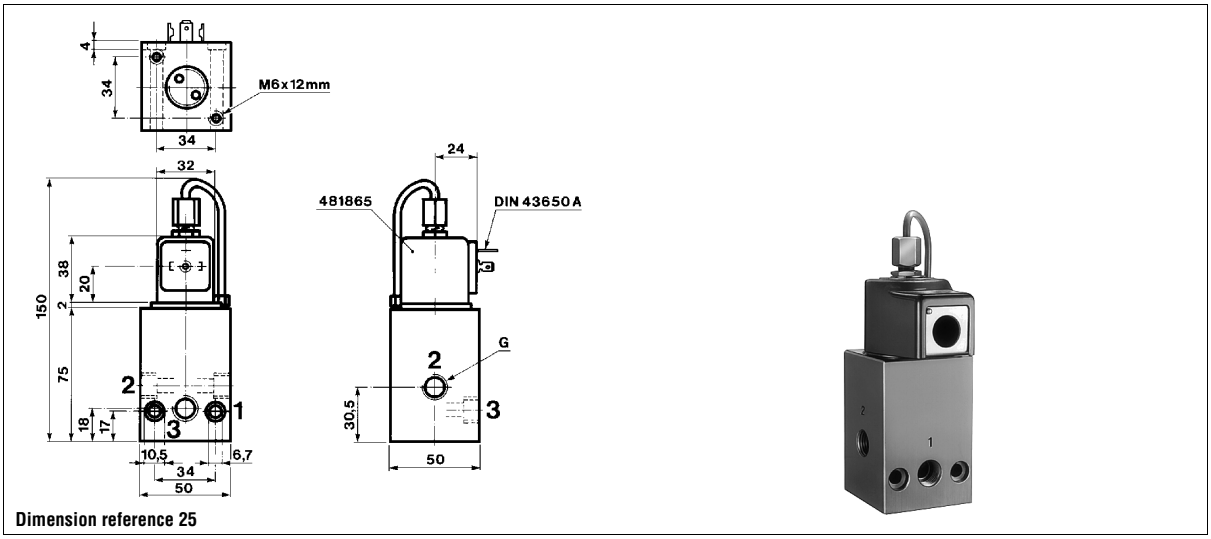

Parker Lucifer SA
Fluid Control Division Europe
CH-1227 Carouge-Genève

Electrical parts options with 3/2 valves for oil (hydraulic) and neutral liquids

El.part Group	Coil	Protection class	Protection class / Temperature class	Power DC	Power AC	Coil Order No.	Coil Ref. No.	Connection	Housing Order No.	Housing Ref. No.	Ambient temp. min.	Ambient temp. max.
1	**22 mm**	IP 65	**Class F**	2.5 W	2 W	DA01	**488980**	for DIN plug	A0	**8993**	-40	50
		IP 65	**Class F**	2.5 W	2 W	DA02	**481045**	with DIN plug	A0	**8993**	-40	50
		IP 65	**Class F**	5 W	4 W	DA03	**481180**	for DIN plug	A0	**8993**	-40	50
		IP 65	**Class F**	5 W	4 W	DA04	**481530**	with DIN plug	A0	**8993**	-40	50
		IP 65	**EEx m II T4**	5 W	4 W	VA01	**482605**	with 1500mm cable	00	-	-40	50
		IP 65	**EEx m II T5**	2.5 W	2 W	VA02	**482606**	with 1500mm cable	00	-	-40	50
2	**32 mm** (Std)	IP 65	**Class F**	9 W	8 W	DZ02	**481865**	for DIN plug	N1	**2995**	-40	50
		IP 65		9 W	8 W	DZ03	**482725**	with DIN plug	N1	**2995**	-40	50
		IP 65	**Class H**	9 W	8 W	DZ04	**492453**	for DIN plug	N1	**2995**	-40	50
		IP 65		9 W	8 W	DZ05	**492726**	with DIN plug	N1	**2995**	-40	50
		IP 65	**Class F, 50/60 Hz**	-	9 W	DZ06	**483510**	for DIN plug	N1	**2995**	-40	50
		IP 65		-	9 W	DZ07	**482635**	with DIN plug	N1	**2995**	-40	50
		IP 65	**EEx m II T4**	9 W	8 W	HZ05	**492670**	with 3000mm cable	00	-	-40	40
		IP 65	**Class H**	14 W	14 W	DZ08	**492425**	for DIN plug	N1	**2995**	-40	50
		IP 65		14 W	14 W	DZ09	**492727**	with DIN plug	N1	**2995**	-40	50
	50 mm (Std)	IP10 / IP 44	**Class F**	8 W	8 W	EZ01	**481000**	screw-terminals	E0	**4270**	-40	50
		IP10 / IP 44	**Class H**	8 W	8 W	EZ02	**485100**	screw-terminals	E0	**4270**	-40	50
		IP10 / IP 44	**Class H**	14 W	14 W	EZ92	**486265**	screw-terminals	E0	**4270**	-40	50
		IP 67	**Class F, M20x1.5**	8 W	8 W	EZ01	**481000**	screw-terminals	G1	**4538**	-40	50
		IP 65	**EEx m II T5/T4**	9 W	8 W	VZ01	**492070**	with 1500mm cable	00	-	-40	40/65
		IP 67	**EEx me II T4**	8 W	8 W	HZ06	**483371**	for cable connection	00	-	-40	65
		IP 66	**EEx me II T3/T4**	11 W	9 W	VZ03	**492190**	for cable connection	00	-	-40	75/40
3	**32 mm**	IP 65	**Class H**	-	14 W	DZ08	**492425**	for DIN plug	N1	**2995**	-40	50
4	**50 mm (impulse)**	IP10 / IP 44	**Class F**	-	11 W	MZ01	**484990**	screw-terminals	E1	**4269**	-40	50
		IP10 / IP 44	**Class F**	13 W	-	MZ02	**485400**	screw-terminals	E1	**4269**	-40	50
5	**50 mm**	IP 54	**EEx d IIC T4/T5/T6**	8 W	8 W	HZ08	**483250**	for cable 1/2 NPT	00	-	-40	80/75/60
6	**32 mm (Miniwatt)**	IP 65	**Class F**	1.6 W	-	DZ10	**482740**	for DIN plug	N1	**2995**	-40	50
		IP 65	**Class F**	1.6W	-	DZ11	**482745**	with DIN plug	N1	**2995**	-40	50
	50 mm (Miniwatt)	IP 67	**EEx me II T5**	2.5 W	-	VZ04	**491117**	for cable connection	00	-	-40	65
		IP 67	**EEx m II T5/T4**	2.5 W	2.5 W	VZ05	**492370**	with 1500mm cable	00	-	-40	40/65
		IP 66	**EEx me II T6/T5**	2.5 W	2.5 W	VZ06	**492390**	for cable connection	00	-	-40	40/75
7	**32 mm**	IP 65	**EEx ia II C T6**	0.4 W	-	DZ12	**483580.01**	for DIN plug	N1	**2995**	-40	55
		IP 65		0.4 W	-	DZ13	**483960.01**	with DIN plug	N1	**2995**	-40	55
	50 mm	IP 66	**EEx ia II C T6**	0.4 W	-	VZ07	**488650.01**	for cable connection	00	-	-40	65
		IP 67		0.4 W	-	VZ08	**488660.01**	with 2000mm cable	00	-	-40	65
		IP 65		0.4 W	-	VZ09	**488670.01**	with DIN plug	00	-	-40	65

Note: This table is indicative only. Please contact your distributor to confirm your selection.

Parker Lucifer SA
Fluid Control Division Europe
CH-1227 Carouge-Genève

Tel: +45 63 12 83 00 | Email: ps@hymatik.com | www.hymatik.com | Hvidkaervej 27a, DK-5250 Odense SV, Denmark

High corrosion-resistant valves (Stainless Steel) 3/2

ACTUATION	BODY MATERIAL	FUNCTION	CONNECTION	ORIFICE (MM)	MAX. PRESSURE (BAR)	PAGE
Direct operated	**303 Stainless steel body**	**Normally closed**	1/4	1 to 2.5	15.0	182
		Universal	1/4	1.5 to 2.5	10.0	182

Notes:
Direct operated valves: pressure range from 0 to max pressure.

Parker Lucifer SA
Fluid Control Division Europe
CH-1227 Carouge-Genève

High corrosion-resistant valves (Stainless Steel)

3/2

Applications

The valves in this section are made of corrosion-resistant material internally and externally.
Please refer to the fluid compatibility chart in this catalogue for detailed fluid compatibility.



Direct operated

Port size	Orifice (mm)	Flow factors (L/min)			Admissible differential pressure bar			Fluid temp. °C			Seat disc	Reference numbers					Power consumption (W)		Wt. (g)	El. Part Group *	Dim ref.
		Liquids		Gases	Min	Max		Gas	Liquid	Oil		Global valve reference	Valve reference no.	Housing	Coil	OR	DC	AC			
G		kv	Qmax	Qn		DC	AC														

303 Stainless steel body/Pipe mounting

Normally closed

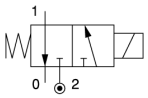

1/4	1	0.6	2	32	0	10	-	75	75	-	FKM	-	**131V5490** [1]	**-**	**483580.01** [2]	0.4	-	325	7	78
	1.5	1.5	6	80	0	15	15	100	100	100	FKM	7131VVG2GV00	**131V5406**	**2995**	**481865**	9	8	410	2	16
	1.5	1.5	6	80	0	15	15	120	120	120	FKM			**4270**	**481000**	8	8	530	2	
	1.5	1.5	6	80	0	15	15	100	100	100	Ruby	7131VVG2GR00	**131V5463**	**2995**	**481865**	9	8	410	2	16
	1.5	1.5	6	80	0	15	15	130	130	130	Ruby			**4270**	**481000**	8	8	530	2	
	1.5	1.5	6	80	0	15	15	180	180	180	Ruby			**4270**	**486265**	14	14	540	2	
	2.5	3.5	8.5	220	0	7	7	100	100	100	FKM	7131VVG2LV00	**131V5306**	**2995**	**481865**	9	8	410	2	16
	2.5	3.5	8.5	220	0	7	7	120	120	120	FKM			**4270**	**481000**	8	8	530	2	
	2.5	3.5	9.5	220	0	7	7	100	100	100	Ruby	7131VVG2LR00	**131V5363**	**2995**	**481865**	9	8	410	2	16
	2.5	3.5	9.5	220	0	7	7	130	130	130	Ruby			**4270**	**481000**	8	8	530	2	
	2.5	3.5	9.5	220	0	7	7	180	180	180	Ruby			**4270**	**486265**	14	14	540	2	

303 Stainless steel body/Pipe mounting

Universal

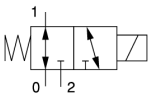

1/4	1.5	1.6	4.5	80	0	10	10	100	100	100	FKM	7133VVG2GV00	**133V5406**	**2995**	**481865**	9	8	410	2	16
	1.5	1.6	4.5	80	0	10	10	120	120	120	FKM			**4270**	**481000**	8	8	530	2	
	1.5	1.6	4.5	80	0	10	10	100	100	100	Ruby	7133VVG2GR00	**133V5463**	**2995**	**481865**	9	8	410	2	16
	1.5	1.6	4.5	80	0	10	10	130	130	130	Ruby			**4270**	**481000**	8	8	530	2	
	1.5	1.6	4.5	80	0	10	10	180	180	180	Ruby			**4270**	**486265**	14	14	540	2	
	2.5	3.5	8.5	220	0	4	4	100	100	100	FKM	7133VVG2LV00	**133V5306**	**2995**	**481865**	9	8	410	2	16
	2.5	3.5	8.5	220	0	4	4	120	120	120	FKM			**4270**	**481000**	8	8	530	2	
	2.5	3.5	8.5	220	0	4	4	100	100	100	Ruby	7133VVG2LR00	**133V5363**	**2995**	**481865**	9	8	410	2	16
	2.5	3.5	8.5	220	0	4	4	130	130	130	Ruby			**4270**	**481000**	8	8	530	2	
	2.5	3.5	8.5	220	0	4	4	180	180	180	Ruby			**4270**	**486265**	14	14	540	2	

Notes:

* See Electrical Parts Group table at end of section

1. Other coil-housing available: 488650.01, 488660.01, 4888670.01 (refer to electrical parts at end of this section)
2. This reference no. is for the complete electrical part (coil + housing)

Parker Lucifer SA
Fluid Control Division Europe
CH-1227 Carouge-Genève

Tel: +45 63 12 83 00 | Email: ps@hymatik.com | www.hymatik.com | Hvidkaervej 27a, DK-5250 Odense SV, Denmark

High corrosion-resistant valves (Stainless Steel) 3/2 - Direct operated

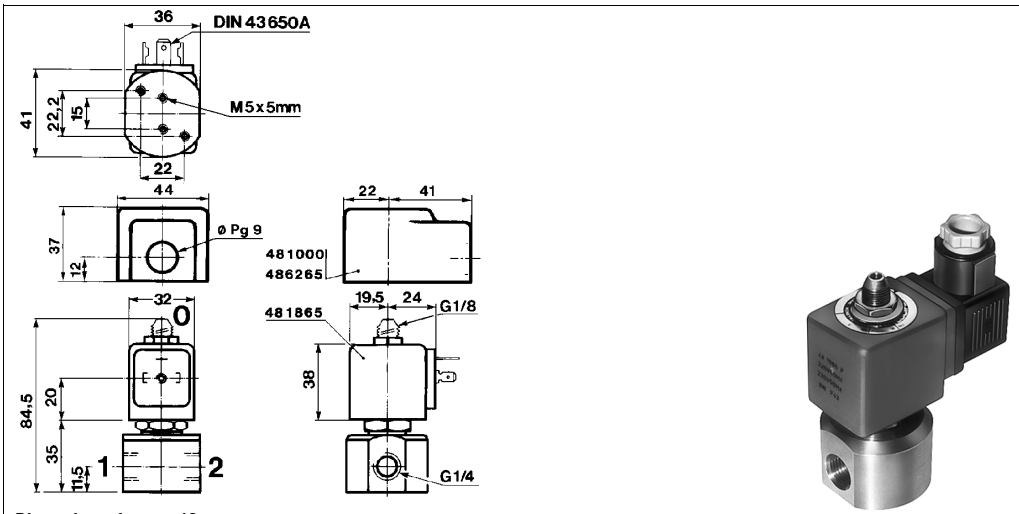

Dimension reference 16

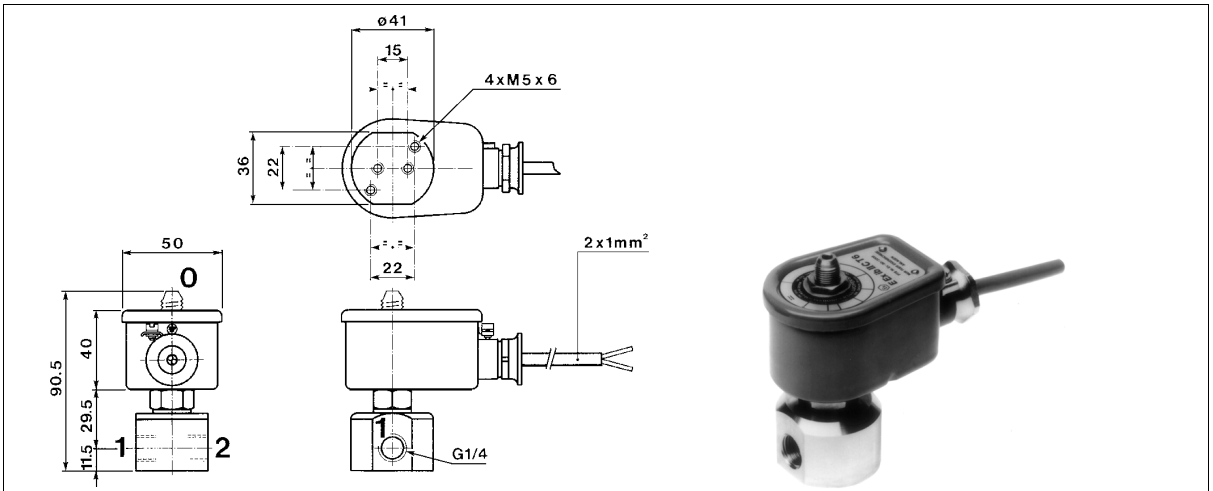

Dimension reference 78

Parker Lucifer SA
Fluid Control Division Europe
CH-1227 Carouge-Genève

Electrical parts options with 3/2 high corrosion resistant stainless steel valves

El.part Group	Coil	Protection class	Protection class / Temperature class	Power DC	Power AC	Coil Order No.	Coil Ref. No.	Connection	Housing Order No.	Housing Ref. No.	Ambient temp. min.	Ambient temp. max.
1	**22 mm**	IP 65	**Class F**	2.5 W	2 W	DA01	**488980**	for DIN plug	A0	**8993**	-40	50
		IP 65	**Class F**	2.5 W	2 W	DA02	**481045**	with DIN plug	A0	**8993**	-40	50
		IP 65	**Class F**	5 W	4 W	DA03	**481180**	for DIN plug	A0	**8993**	-40	50
		IP 65	**Class F**	5 W	4 W	DA04	**481530**	with DIN plug	A0	**8993**	-40	50
		IP 65	**EEx m II T4**	5 W	4 W	VA01	**482605**	with 1500mm cable	00	**-**	-40	50
		IP 65	**EEx m II T5**	2.5 W	2 W	VA02	**482606**	with 1500mm cable	00	**-**	-40	50
2	**32 mm** (Std)	IP 65	**Class F**	9 W	8 W	DZ02	**481865**	for DIN plug	N1	**2995**	-40	50
		IP 65		9 W	8 W	DZ03	**482725**	with DIN plug	N1	**2995**	-40	50
		IP 65	**Class H**	9 W	8 W	DZ04	**492453**	for DIN plug	N1	**2995**	-40	50
		IP 65		9 W	8 W	DZ05	**492726**	with DIN plug	N1	**2995**	-40	50
		IP 65	**Class F, 50/60 Hz**	-	9 W	DZ06	**483510**	for DIN plug	N1	**2995**	-40	50
		IP 65		-	9 W	DZ07	**482635**	with DIN plug	N1	**2995**	-40	50
		IP 65	**EEx m II T4**	9 W	8 W	HZ05	**492670**	with 3000mm cable	00	**-**	-40	40
		IP 65	**Class H**	14 W	14 W	DZ08	**492425**	for DIN plug	N1	**2995**	-40	50
		IP 65		14 W	14 W	DZ09	**492727**	with DIN plug	N1	**2995**	-40	50
	50 mm (Std)	IP10 / IP 44	**Class F**	8 W	8 W	EZ01	**481000**	screw-terminals	E0	**4270**	-40	50
		IP10 / IP 44	**Class H**	8 W	8 W	EZ02	**485100**	screw-terminals	E0	**4270**	-40	50
		IP10 / IP 44	**Class H**	14 W	14 W	EZ92	**486265**	screw-terminals	E0	**4270**	-40	50
		IP 67	**Class F, M20x1.5**	8 W	8 W	EZ01	**481000**	screw-terminals	G1	**4538**	-40	50
		IP 65	**EEx m II T5/T4**	9 W	8 W	VZ01	**492070**	with 1500mm cable	00	**-**	-40	40/65
		IP 67	**EEx me II T4**	8 W	8 W	HZ06	**483371**	for cable connection	00	**-**	-40	65
		IP 66	**EEx me II T3/T4**	11 W	9 W	VZ03	**492190**	for cable connection	00	**-**	-40	75/40
3	**32 mm**	IP 65	**Class H**	-	14 W	DZ08	**492425**	for DIN plug	N1	**2995**	-40	50
4	**50 mm (impulse)**	IP10 / IP 44	**Class F**	-	11 W	MZ01	**484990**	screw-terminals	E1	**4269**	-40	50
		IP10 / IP 44	**Class F**	13 W	-	MZ02	**485400**	screw-terminals	E1	**4269**	-40	50
5	**50 mm**	IP 54	**EEx d IIC T4/T5/T6**	8 W	8 W	HZ08	**483250**	for cable 1/2 NPT	00	**-**	-40	80/75/60
6	**32 mm (Miniwatt)**	IP 65	**Class F**	1.6 W	-	DZ10	**482740**	for DIN plug	N1	**2995**	-40	50
		IP 65	**Class F**	1.6W	-	DZ11	**482745**	with DIN plug	N1	**2995**	-40	50
	50 mm (Miniwatt)	IP 67	**EEx me II T5**	2.5 W	-	VZ04	**491117**	for cable connection	00	**-**	-40	65
		IP 67	**EEx m II T5/T4**	2.5 W	2.5 W	VZ05	**492370**	with 1500mm cable	00	**-**	-40	40/65
		IP 66	**EEx me II T6/T5**	2.5 W	2.5 W	VZ06	**492390**	for cable connection	00	**-**	-40	40/75
7	**32 mm**	IP 65	**EEx ia II C T6**	0.4 W	-	DZ12	**483580.01**	for DIN plug	N1	**2995**	-40	55
		IP 65		0.4 W	-	DZ13	**483960.01**	with DIN plug	N1	**2995**	-40	55
	50 mm	IP 66	**EEx ia II C T6**	0.4 W	-	VZ07	**488650.01**	for cable connection	00	**-**	-40	65
		IP 67		0.4 W	-	VZ08	**488660.01**	with 2000mm cable	00	**-**	-40	65
		IP 65		0.4 W	-	VZ09	**488670.01**	with DIN plug	00	**-**	-40	65

Note: This table is indicative only. Please contact your distributor to confirm your selection.

Parker Lucifer SA
Fluid Control Division Europe
CH-1227 Carouge-Genève

3- & 4-way valves for pneumatic applications

	Page
4-way pneumatic valves for pipe connection/Sub-base mounting	187
3-way pneumatic valves for actuator control (pipe mounted and with NAMUR interface)	225
3-way Stackable valves for actuator control	233
3- & 4-way pneumatic valves for actuator control (pipe mounted / spool design)	238
3- & 4-way pneumatic valves for actuator control (pipe mounted / poppet design)	248
3- & 4-way pneumatic valves for actuator control (NAMUR interface / spool design)	258
3- & 4-way pneumatic valves for actuator control (NAMUR interface / poppet design)	270
316L St. Steel 3-way pneumatic valves for Offshore applications	273
316L St. Steel 3-way pneumatic valves for actuator control (pipe mounted and with NAMUR interface)	287
316L St. Steel 4-way pneumatic valves for actuator control (pipe mounted / spool design)	296
316L St. Steel 3- or 4-way pneumatic valves for actuator control (NAMUR interface / spool design)	308
EExPress Bus Manifold for actuator control	317

Applications



AIR

Parker Lucifer SA
Fluid Control Division Europe
CH-1227 Carouge-Genève

Tel: +45 63 12 83 00 | Email: ps@hymatik.com | www.hymatik.com | Hvidkaervej 27a, DK-5250 Odense SV, Denmark

Parker Lucifer SA
Fluid Control Division Europe
CH-1227 Carouge-Genève

4-way pneumatic valves for pipe connection/sub-base mounting

ACTUATION	CONNECTION	ORIFICE (MM)	MAX. PRESSURE (BAR)	PAGE
Pilot operated	1/8	4	10.0	196
	1/4	6 to 8	40.0	188/198/202/204
	3/8	8	15.0	200
	1/2	14	15.0	212
	SB	4 to 15	10.0	190/214/216
	CETOP	6	10.0	216
Impulse coil	1/4	8	15.0	192/200
	1/2	14	15.0	212
	SB	15	10.0	194/216
	CETOP	6	10.0	220
Two solenoids and main pressure supply	1/8	4	10.0	198
	1/4	8	10.0	206/208
	SB	4	10.0	214
External pressure supply	CETOP	6	10.0	218
Double external pressure supply	1/4	8	10.0	210

Notes:
Pilot operated valves: pressure range from 1 or 2 bar to max. pressure (refer to tables).

Parker Lucifer SA
Fluid Control Division Europe
CH-1227 Carouge-Genève

Tel: +45 63 12 83 00 | Email: ps@hymatik.com | www.hymatik.com | Hvidkaervej 27a, DK-5250 Odense SV, Denmark

4-way pneumatic valves for pipe connection/sub-base mounting

Anod. aluminium body/Pipe mounting

4/2 - Pilot operated -

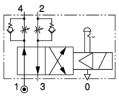

Port size G	Orifice (mm)	Flow factors (L/min Qn	Admissible differential pressure bar Min	Max DC	Max AC	Fluid temp. °C Gas	Seat disc	Reference numbers Global valve reference	Valve reference no.	Housing	OR Coil	Power consumption (W) DC	Power consumption (W) AC	Wt. (g)	El. Part Group *	Dim ref.
1/4	6	630	1	10	10	75	NBR	7341BAG2JNM0	**341B3403** 1	**2995**	**481865**	9	8	700	2	36
	6	630	1	10	10	75	NBR			**4270**	**481000**	8	8	820	2	
	6	630	1	10	10	75	NBR	7341BAG2JNMR	**341B34** 2	**2995**	**481865**	9	8	700	2	36
	6	630	1	10	10	75	NBR			**4270**	**481000**	8	8	820	2	
	6	630	1	10	-	75	NBR	7341BAG2JNL8	**341B3480** 2	**2995**	**482740**	1.6	-	700	6	36
	6	560	1	10	-	75	NBR	-	**341B3490** 3	-	**483580.01** 4	0.4	-	665	7	81

Table continued on page 190

Notes:

* See Electrical Parts Group table at end of section

1. Without flow regulators
2. Flow regulating screws standard
3. Other coil-housing available: 488650.01, 488660.01, 4888670.01 (refer to electrical parts at end of this section)
4. This reference no. is for the complete electrical part (coil + housing)

Parker Lucifer SA
Fluid Control Division Europe
CH-1227 Carouge-Genève

Tel: +45 63 12 83 00 | Email: ps@hymatik.com | www.hymatik.com | Hvidkaervej 27a, DK-5250 Odense SV, Denmark

4-way pneumatic valves for pipe connection/sub-base mounting

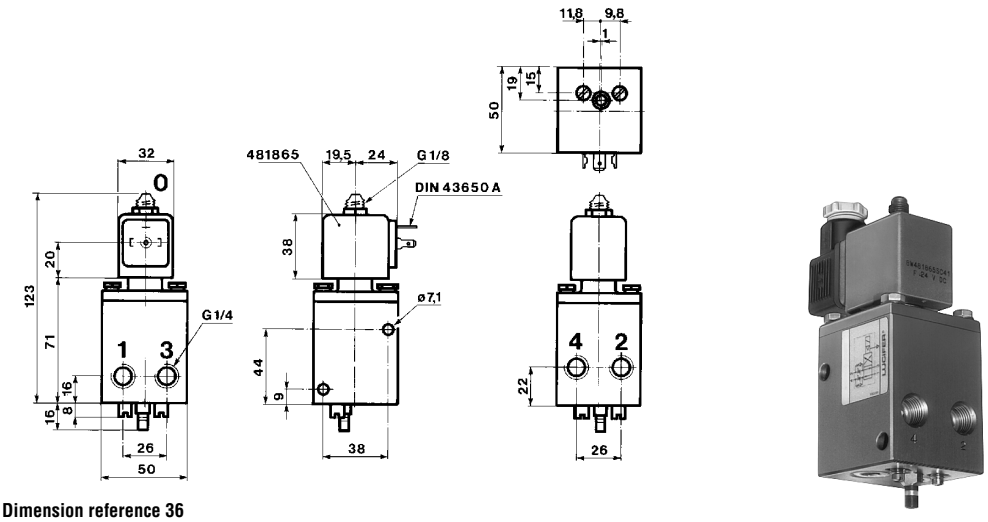

Dimension reference 36

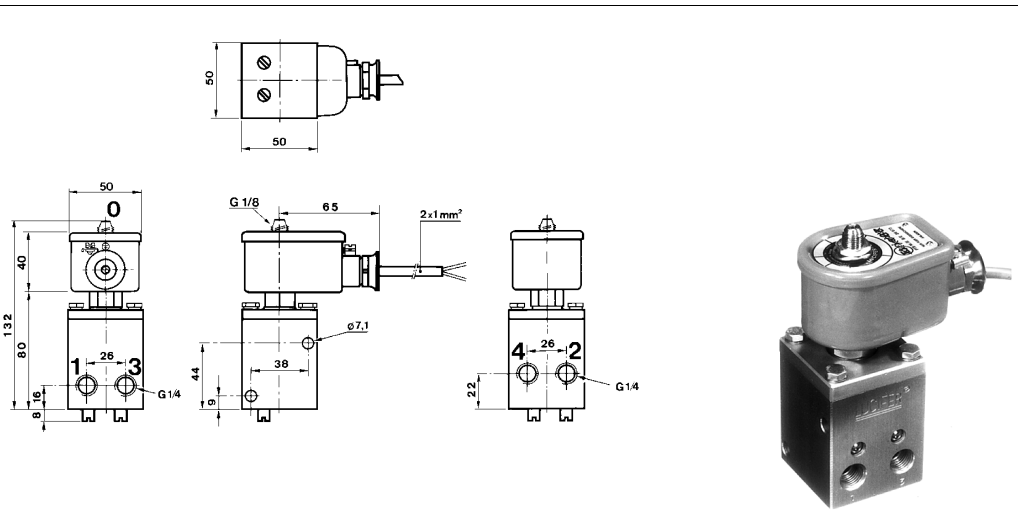

Dimension reference 81

Parker Lucifer SA
Fluid Control Division Europe
CH-1227 Carouge-Genève

4-way pneumatic valves for pipe connection/sub-base mounting

Port size G	Orifice (mm)	Flow factors (L/min Qn	Admissible differential pressure bar Min	Max DC	Max AC	Fluid temp. °C Gas	Seat disc	Reference numbers Global valve reference	Valve reference no.	Housing	OR Coil	Power consumption (W) DC	Power consumption (W) AC	Wt. (g)	El. Part Group *	Dim ref.

Anod. aluminium body/Sub-base mounting

4/2 - Pilot operated -

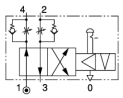

SB	6	630	1	10	10	75	NBR	7341FAS3JNM0	**341F3403** 1	**2995**	**481865**	9	8	700	2	37
	6	630	1	10	10	75	NBR			**4270**	**481000**	8	8	820	2	
	6	630	1	10	10	75	NBR	7341FAS3JNMR	**341F34** 2	**2995**	**481865**	9	8	700	2	37
	6	630	1	10	10	75	NBR			**4270**	**481000**	8	8	820	2	

Table continued on page 192

Notes:

* See Electrical Parts Group table at end of section

1. Without flow regulators
2. Flow regulating screws standard

Parker Lucifer SA
Fluid Control Division Europe
CH-1227 Carouge-Genève

Tel: +45 63 12 83 00 | Email: ps@hymatik.com | www.hymatik.com | Hvidkaervej 27a, DK-5250 Odense SV, Denmark

4-way pneumatic valves for pipe connection/sub-base mounting

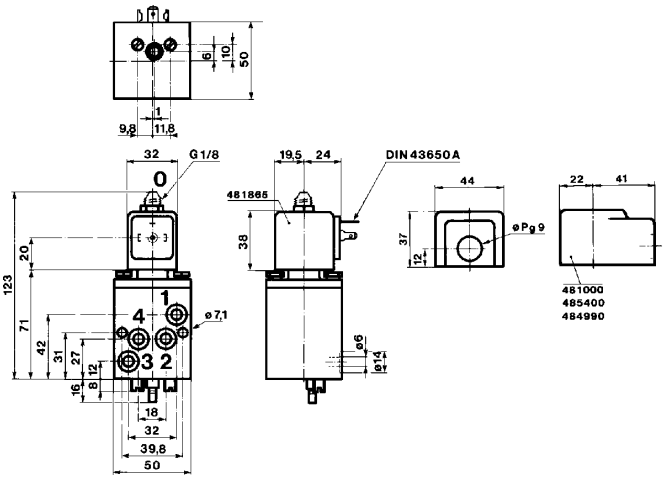

Dimension reference 37

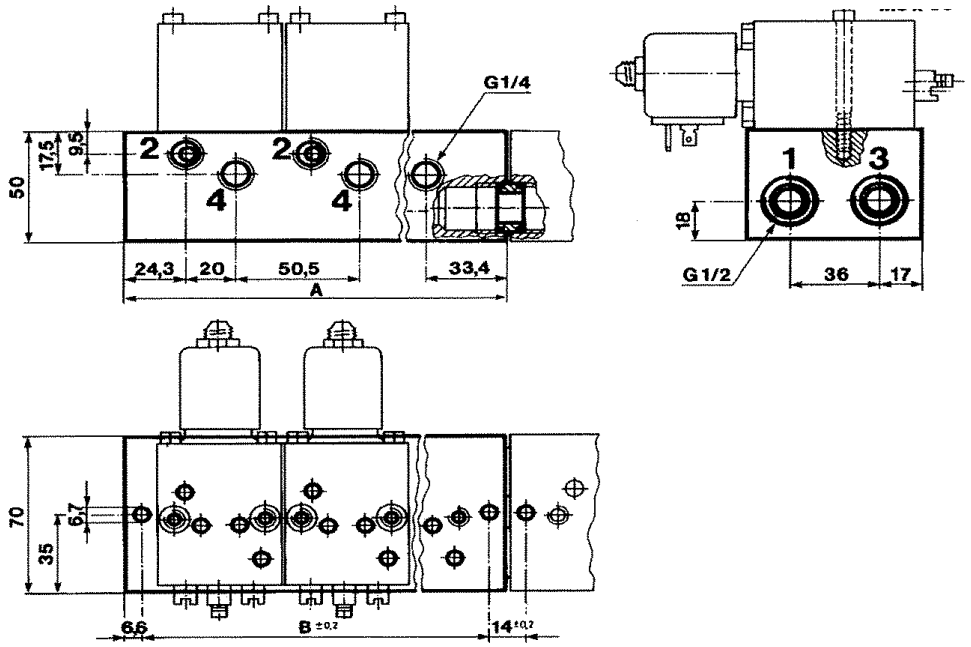

Quantity of valves by assembly	Reference numbers	A mm	B mm	Wt. (g)
2	485635	128.2	115	1000
3	485636	178.7	165.5	1400
5	485637	279.7	266.5	2250

Associated sub-base diagram

Parker Lucifer SA
Fluid Control Division Europe
CH-1227 Carouge-Genève

Tel: +45 63 12 83 00 | Email: ps@hymatik.com | www.hymatik.com | Hvidkaervej 27a, DK-5250 Odense SV, Denmark

4-way pneumatic valves for pipe connection/sub-base mounting

Port size	Orifice (mm)	Flow factors (L/min	Admissible differential pressure bar			Fluid temp. °C	Seat disc	Reference numbers			OR	Power consumption (W)		Wt. (g)	El. Part Group *	Dim ref.
			Min	Max												
G		Qn		DC	AC	Gas		Global valve reference	Valve reference no.	Housing	Coil	DC	AC			

Anod. aluminium body/Pipe mounting

4/2 - Impulse coil -

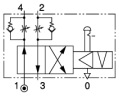

1/4	6	630	1	-	10	75	NBR	7345BAG2JNMR	**345B34** [1]	**4269**	**484990**	-	11	840	4	36
	6	630	1	10	-	75	NBR			**4269**	**485400**	13	-	840	4	

Table continued on page 194

Notes:

* See Electrical Parts Group table at end of section

1. Flow regulating screws standard

Parker Lucifer SA
Fluid Control Division Europe
CH-1227 Carouge-Genève

Tel: +45 63 12 83 00 | Email: ps@hymatik.com | www.hymatik.com | Hvidkaervej 27a, DK-5250 Odense SV, Denmark

4-way pneumatic valves for pipe connection/sub-base mounting

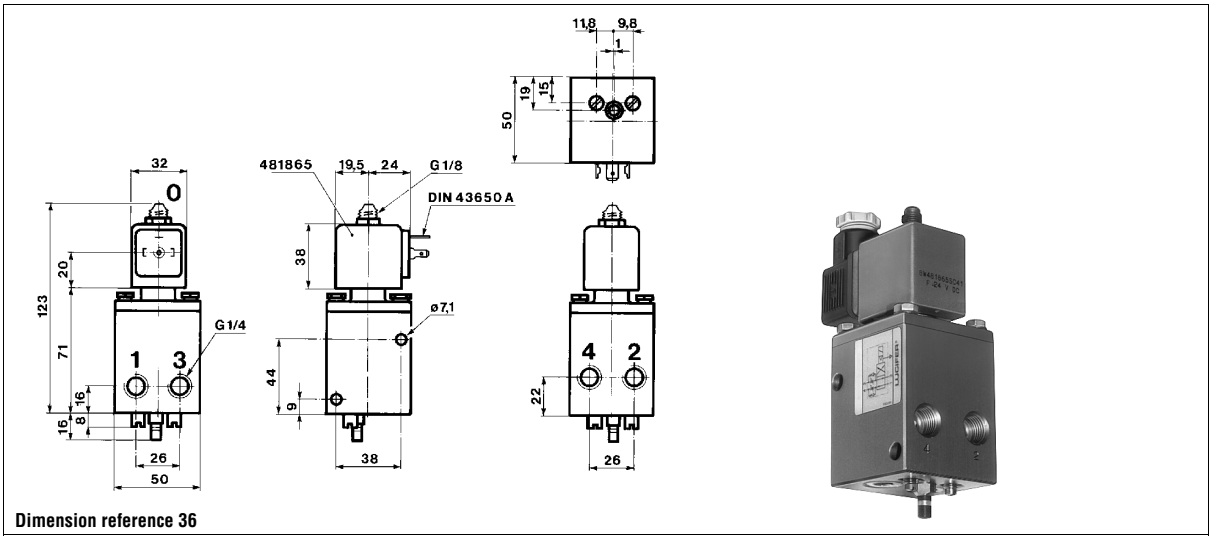

Dimension reference 36

Parker Lucifer SA
Fluid Control Division Europe
CH-1227 Carouge-Genève

4-way pneumatic valves for pipe connection/sub-base mounting

Port size	Orifice (mm)	Flow factors (L/min	Admissible differential pressure bar			Fluid temp. °C	Seat disc	Reference numbers			OR	Power consumption (W)		Wt. (g)	El. Part Group *	Dim ref.
			Min	Max												
G		Qn		DC	AC	Gas		Global valve reference	Valve reference no.	Housing	Coil	DC	AC			

Anod. aluminium body/Sub-base mounting

4/2 - Impulse coil -

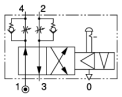

SB	6	630	1	-	10	75	NBR	7345FAS3JNMR	**345F34** 1	**4269**	**484990**	-	11	840	4	37
	6	630	1	10	-	75	NBR			**4269**	**485400**	13	-	840	4	

Notes:

* See Electrical Parts Group table at end of section

1. Flow regulating screws standard

Parker Lucifer SA
Fluid Control Division Europe
CH-1227 Carouge-Genève

Tel: +45 63 12 83 00 | Email: ps@hymatik.com | www.hymatik.com | Hvidkaervej 27a, DK-5250 Odense SV, Denmark

4-way pneumatic valves for pipe connection/sub-base mounting

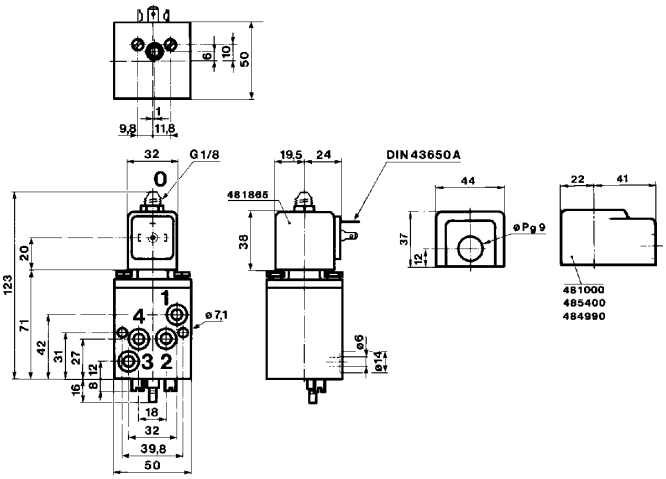

Dimension reference 37

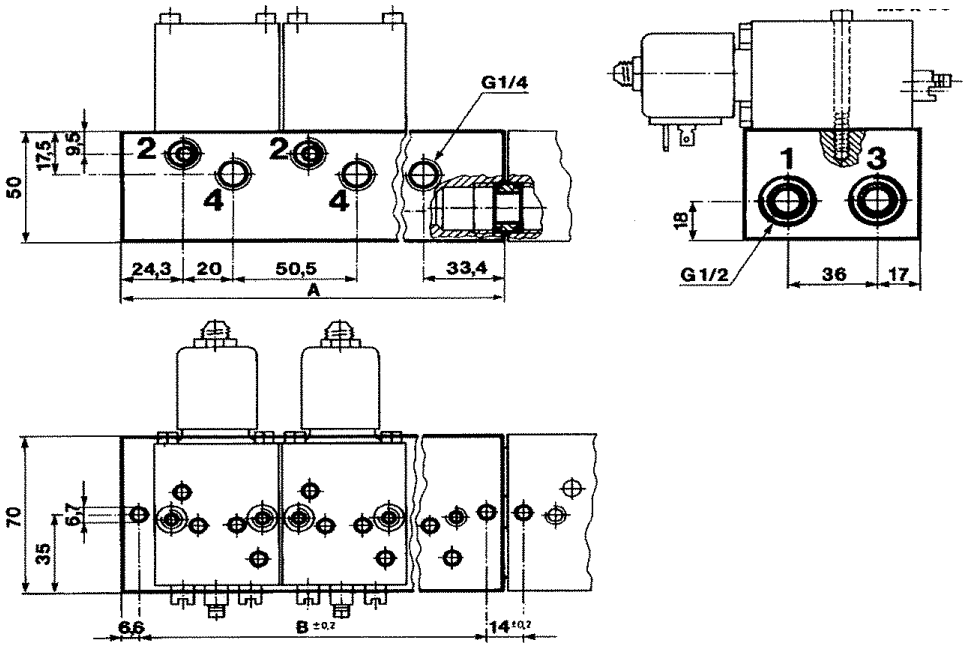

Quantity of valves by assembly	Reference numbers	A mm	B mm	Wt. (g)
2	485635	128.2	115	1000
3	485636	178.7	165.5	1400
5	485637	279.7	266.5	2250

Associated sub-base diagram

Parker Lucifer SA
Fluid Control Division Europe
CH-1227 Carouge-Genève

Tel: +45 63 12 83 00 | Email: ps@hymatik.com | www.hymatik.com | Hvidkaervej 27a, DK-5250 Odense SV, Denmark

4-way pneumatic valves for pipe connection/sub-base mounting

5/2



Aluminium alloy and brass body/Pipe mounting

5/2 - Pilot operated -

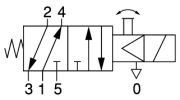

Port size G	Orifice (mm)	Flow factors (L/min Qn	Admissible differential pressure bar Min	Max DC	Max AC	Fluid temp. °C Gas	Seat disc	Reference numbers Global valve reference	Valve reference no.	Housing	OR Coil	Power consumption (W) DC	Power consumption (W) AC	Wt. (g)	El. Part Group *	Dim ref.
1/8	4	400	1	10	10	75	NBR	-	**341L9101**	**8993**	**488980**	2.5	2	270	1	42

Table continued on page 198

Notes:

* See Electrical Parts Group table at end of section

Parker Lucifer SA
Fluid Control Division Europe
CH-1227 Carouge-Genève

Tel: +45 63 12 83 00 | Email: ps@hymatik.com | www.hymatik.com | Hvidkaervej 27a, DK-5250 Odense SV, Denmark

4-way pneumatic valves for pipe connection/sub-base mounting

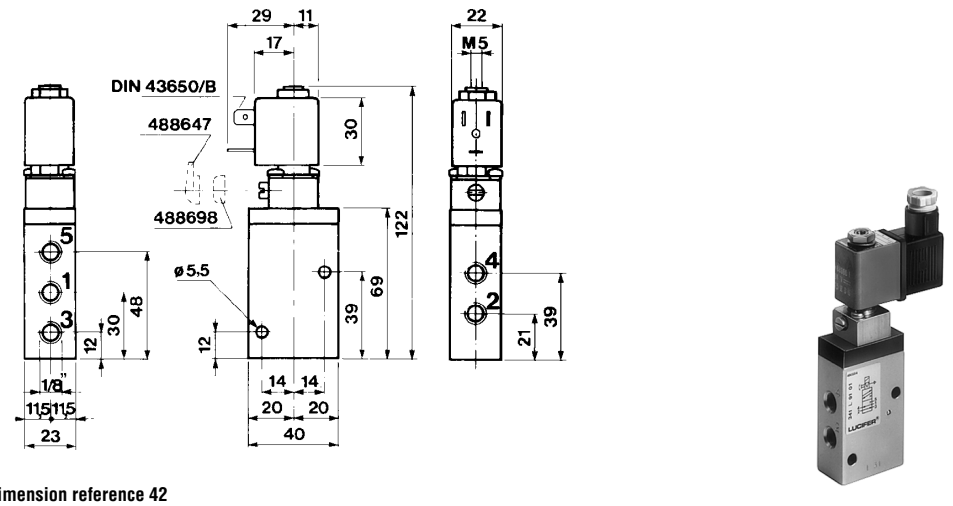

Dimension reference 42

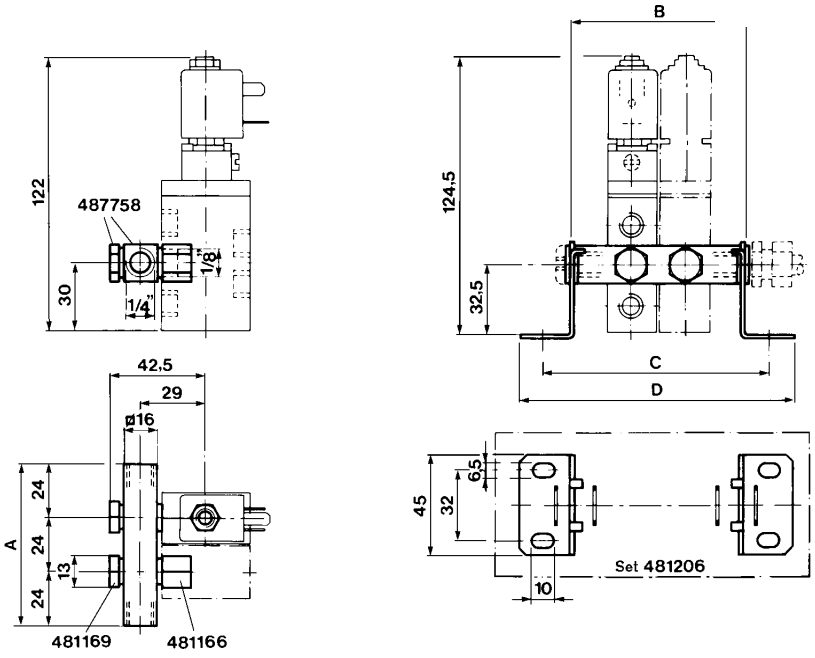

Quantity of valves by assembly	Feeder Ref.	A mm	B mm	C mm	D mm	Sealing 487758	Screw 481169*	Set No. 481206
2	481168.02	72	78	102	123	4	2	1
3	481168.03	96	102	126	147	6	3	1
4	481168.04	120	126	150	171	8	4	1
5	481168.05	144	150	174	195	10	5	1
6	481168.06	168	174	198	219	12	6	1
7	481168.07	192	198	222	243	14	7	1
8	481168.08	216	222	246	267	16	8	1
9	481168.09	240	246	270	291	18	9	1
10	481168.10	264	270	294	315	20	10	1

Associated sub-base diagram

Parker Lucifer SA
Fluid Control Division Europe
CH-1227 Carouge-Genève

4-way pneumatic valves for pipe connection/sub-base mounting

Port size G	Orifice (mm)	Flow factors (L/min Qn	Admissible differential pressure bar Min	Max DC	Max AC	Fluid temp. °C Gas	Seat disc	Reference numbers Global valve reference	Valve reference no.	Housing	OR Coil	Power consumption (W) DC	Power consumption (W) AC	Wt. (g)	El. Part Group *	Dim ref.
Aluminium alloy and brass body/Pipe mounting																
1/8	4	315	2	10	10	75	NBR	-	**347L9101**	**8993**	**488980** 1	2.5	2	430	1	117
Anod. aluminium body/Pipe mounting																
1/4	8	640	1	40	40	75	NBR	7341BAG2KN00	**341B02** 2	**2995**	**481865**	9	8	1700	2	39
	8	640	1	40	40	75	NBR			**4270**	**481000**	8	8	1800	2	
	8	1000	1	15	15	75	NBR	7341BAG2PN00	**E341B01**	**2995**	**481865**	9	8	1700	2	38
	8	1000	1	15	15	75	NBR			**4270**	**481000**	8	8	1800	2	

5/2 - Two solenoids and main pressure supply -

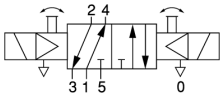

5/2 - Pilot operated -

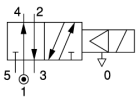

Table continued on page 200

Notes:

* See Electrical Parts Group table at end of section

1. Please order two of these items per valve
2. Valve with pilot return pipe on exhaust port

Parker Lucifer SA
Fluid Control Division Europe
CH-1227 Carouge-Genève

Tel: +45 63 12 83 00 | Email: ps@hymatik.com | www.hymatik.com | Hvidkaervej 27a, DK-5250 Odense SV, Denmark

4-way pneumatic valves for pipe connection/sub-base mounting

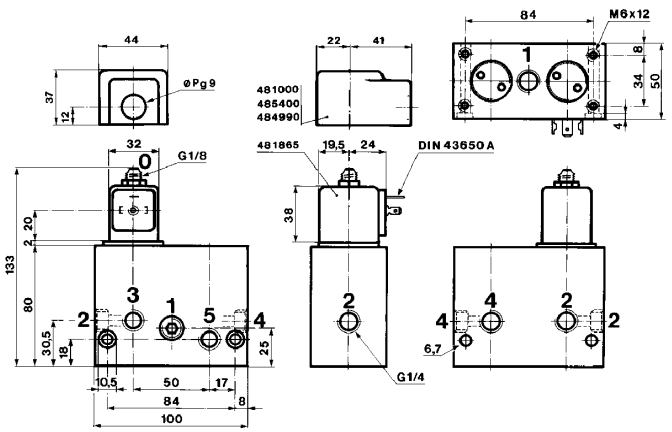

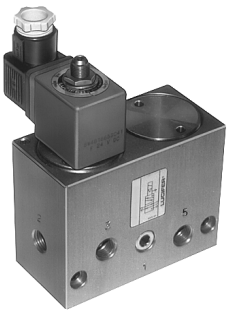

Dimension reference 38

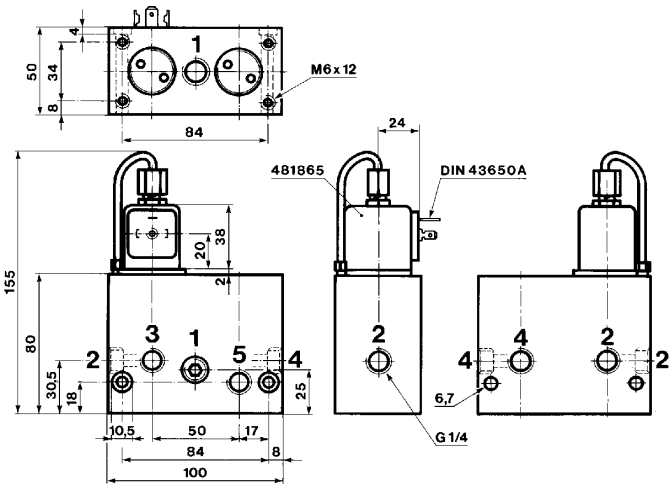

Dimension reference 39

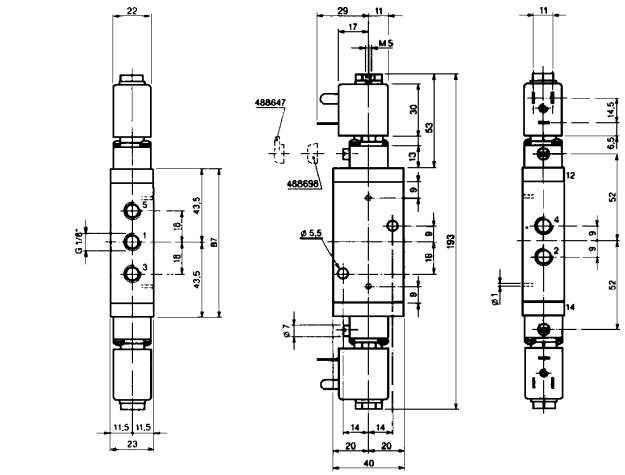

Dimension reference 117

Parker Lucifer SA
Fluid Control Division Europe
CH-1227 Carouge-Genève

4-way pneumatic valves for pipe connection/sub-base mounting

Port size G	Orifice (mm)	Flow factors (L/min Qn	Admissible differential pressure bar Min	Max DC	Max AC	Fluid temp. °C Gas	Seat disc	Reference numbers Global valve reference	Valve reference no.	Housing	OR Coil	Power consumption (W) DC	Power consumption (W) AC	Wt. (g)	El. Part Group *	Dim ref.
Anod. aluminium body/Pipe mounting									**5/2 - Pilot operated -**							
3/8	8	1000	1	15	15	75	NBR	7341BAG3PN00	**E341B11**	**2995**	**481865**	9	8	1700	2	40
	8	1000	1	15	15	75	NBR			**4270**	**481000**	8	8	1800	2	
Anod. aluminium body/Pipe mounting									**5/2 - Impulse coil -**							
1/4	8	1000	1	-	15	75	NBR	7345BAG2PN00	**345B04**	**4269**	**484990**	-	11	1800	4	38
	8	1000	1	15	-	75	NBR			**4269**	**485400**	13	-	1800	4	

Table continued on page 202

Notes:

* See Electrical Parts Group table at end of section

Parker Lucifer SA
Fluid Control Division Europe
CH-1227 Carouge-Genève

Tel: +45 63 12 83 00 | Email: ps@hymatik.com | www.hymatik.com | Hvidkaervej 27a, DK-5250 Odense SV, Denmark

4-way pneumatic valves for pipe connection/sub-base mounting

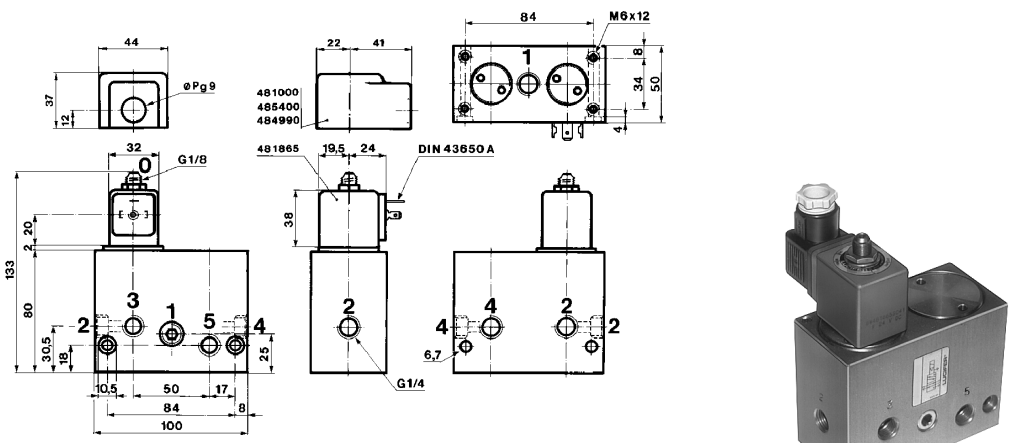

Dimension reference 38

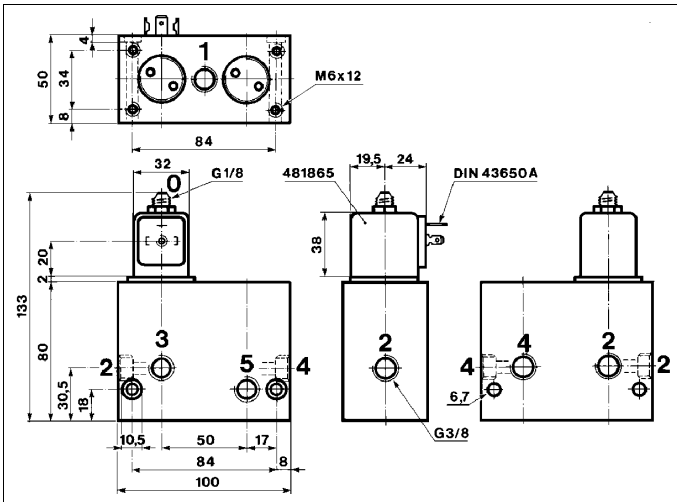

Dimension reference 40

Parker Lucifer SA
Fluid Control Division Europe
CH-1227 Carouge-Genève

4-way pneumatic valves for pipe connection/sub-base mounting

Die-cast zinc body/Pipe mounting

5/2 - Pilot operated -

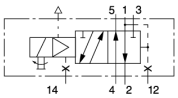

Port size G	Orifice (mm)	Flow factors (L/min Qn	Admissible differential pressure bar Min	Max DC	Max AC	Fluid temp. °C Gas	Seat disc	Reference numbers Global valve reference	Valve reference no.	Housing	OR Coil	Power consumption (W) DC	Power consumption (W) AC	Wt. (g)	El. Part Group *	Dim ref.
1/4	8	1400	1	10	10	75	NBR	-	**341L11**	**8993**	**488980**	2.5	2	690	1	118

Table continued on page 204

Notes:

* See Electrical Parts Group table at end of section

Parker Lucifer SA
Fluid Control Division Europe
CH-1227 Carouge-Genève

Tel: +45 63 12 83 00 | Email: ps@hymatik.com | www.hymatik.com | Hvidkaervej 27a, DK-5250 Odense SV, Denmark

4-way pneumatic valves for pipe connection/sub-base mounting

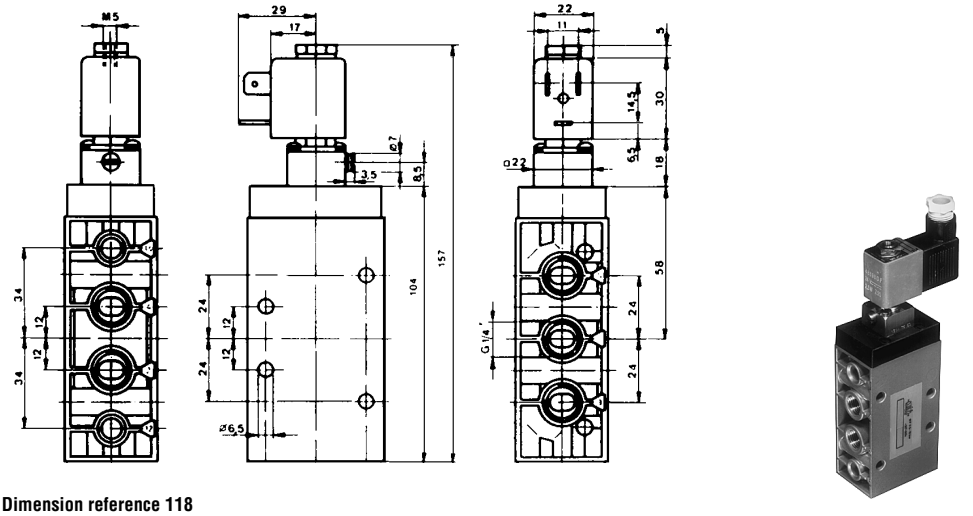

Dimension reference 118

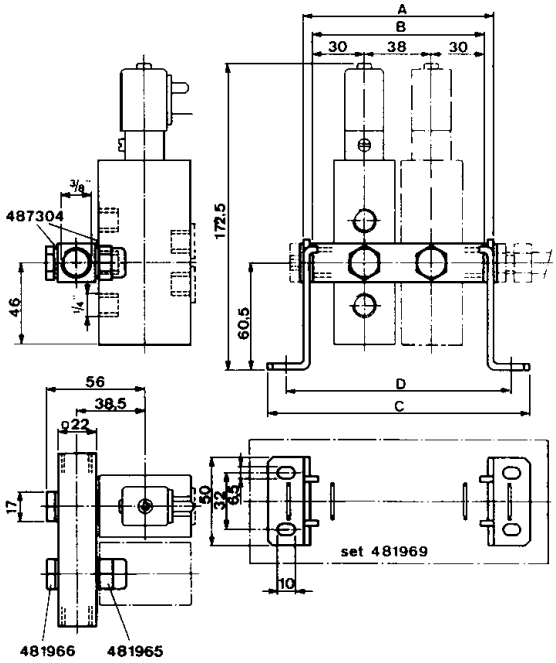

Quantity of valves by assembly	Feeder Ref.	A mm	B mm	C mm	D mm	Sealing 487304	Screw 481966	Set No. 481969
2	481964.02	108	98	149	128	4	2	1
3	481964.03	146	136	187	166	6	3	1
4	481964.04	184	174	225	204	8	4	1
5	481964.05	222	212	263	242	10	5	1
6	481964.06	260	250	301	280	12	6	1
7	481964.07	298	288	339	318	14	7	1
8	481964.08	336	326	377	356	16	8	1
9	481964.09	374	364	415	394	18	9	1
10	481964.10	412	402	453	432	20	10	1

Associated sub-base diagram

Parker Lucifer SA
Fluid Control Division Europe
CH-1227 Carouge-Genève

4-way pneumatic valves for pipe connection/sub-base mounting

Die-cast zinc body/Pipe mounting

5/2 - Pilot operated -

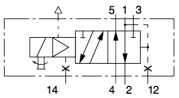

Port size G	Orifice (mm)	Flow factors (L/min Qn	Admissible differential pressure bar Min	Max DC	Max AC	Fluid temp. °C Gas	Seat disc	Reference numbers Global valve reference	Valve reference no.	Housing	OR Coil	Power consumption (W) DC	Power consumption (W) AC	Wt. (g)	El. Part Group *	Dim ref.
1/4	8	1400	1	10	10	75	NBR	-	**341L1190**	-	**483580.01** [1]	0.4	-	690	7	7478
	8	1400	1	10	10	75	NBR	7341LMG2NNM0	**E341L1130**	**2995**	**481865**	9	8	-	2	3539
	8	1400	1	10	10	75	NBR			**4270**	**481000**	8	8	-	2	

Table continued on page 206

Notes:

* See Electrical Parts Group table at end of section

1. Other coil-housing available: 488650.01, 488660.01, 4888670.01 (refer to electrical parts at end of this section)

Parker Lucifer SA
Fluid Control Division Europe
CH-1227 Carouge-Genève

Tel: +45 63 12 83 00 | Email: ps@hymatik.com | www.hymatik.com | Hvidkaervej 27a, DK-5250 Odense SV, Denmark

4-way pneumatic valves for pipe connection/sub-base mounting

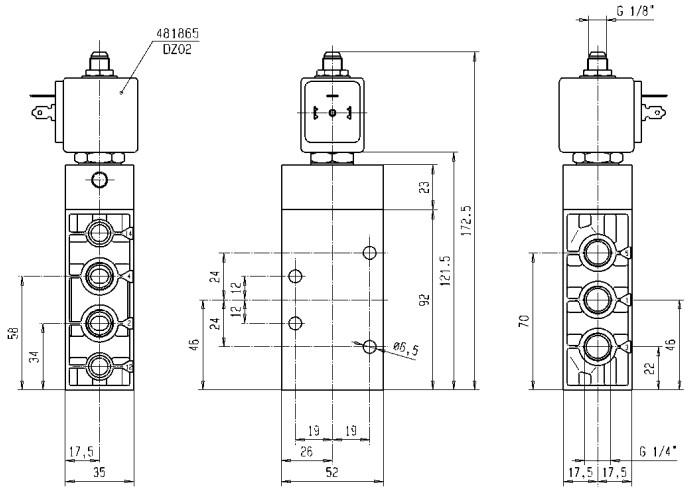

Dimension reference 3539

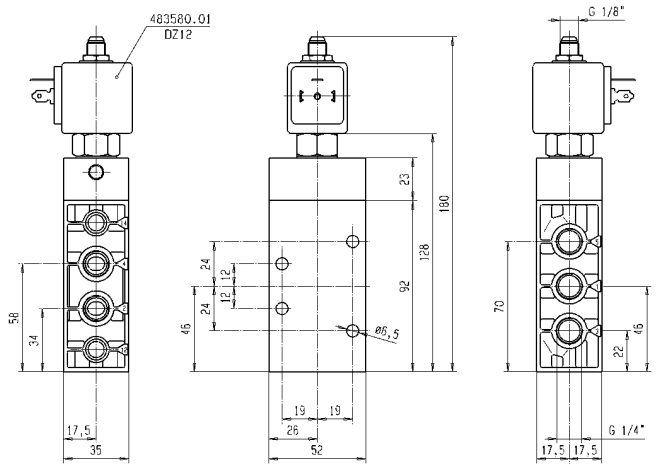

Dimension reference 7478

Parker Lucifer SA
Fluid Control Division Europe
CH-1227 Carouge-Genève

4-way pneumatic valves for pipe connection/sub-base mounting

Port size G	Orifice (mm)	Flow factors (L/min Qn	Admissible differential pressure bar Min	Max DC	Max AC	Fluid temp. °C Gas	Seat disc	Reference numbers Global valve reference	Valve reference no.	Housing	OR Coil	Power consumption (W) DC	Power consumption (W) AC	Wt. (g)	El. Part Group *	Dim ref.
Die-cast zinc body/Pipe mounting									**5/2 - Two solenoids and main pressure supply -**							
1/4	8	1400	1	10	10	75	NBR	-	**347L11**	**8993**	**488980** [1]	2.5	2	750	1	46

Table continued on page 208

Notes:

* See Electrical Parts Group table at end of section

1. Please order two housings and coils for each valve

Parker Lucifer SA
Fluid Control Division Europe
CH-1227 Carouge-Genève

4-way pneumatic valves for pipe connection/sub-base mounting

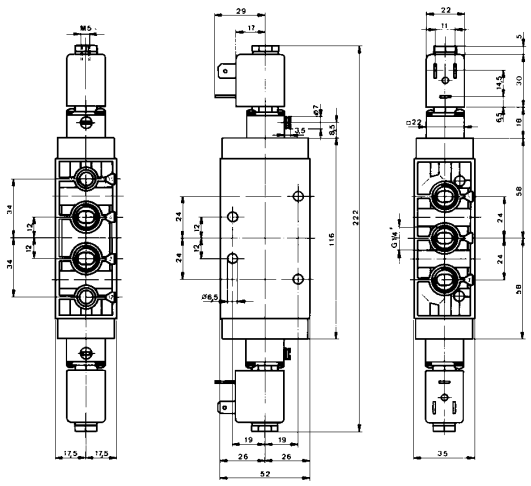

Dimension reference 46

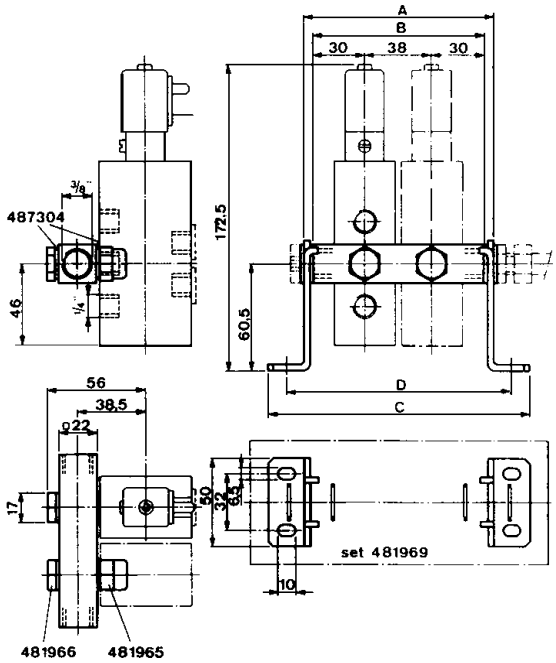

Quantity of valves by assembly	Feeder Ref.	A mm	B mm	C mm	D mm	Sealing 487304	Screw 481966	Set No. 481969
2	481964.02	108	98	149	128	4	2	1
3	481964.03	146	136	187	166	6	3	1
4	481964.04	184	174	225	204	8	4	1
5	481964.05	222	212	263	242	10	5	1
6	481964.06	260	250	301	280	12	6	1
7	481964.07	298	288	339	318	14	7	1
8	481964.08	336	326	377	356	16	8	1
9	481964.09	374	364	415	394	18	9	1
10	481964.10	412	402	453	432	20	10	1

Associated sub-base diagram

Parker Lucifer SA
Fluid Control Division Europe
CH-1227 Carouge-Genève

Tel: +45 63 12 83 00 | Email: ps@hymatik.com | www.hymatik.com | Hvidkaervej 27a, DK-5250 Odense SV, Denmark

4-way pneumatic valves for pipe connection/sub-base mounting

Die-cast zinc body/Pipe mounting

5/2 - Two solenoids and main pressure supply -

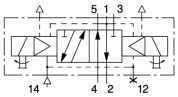

Port size G	Orifice (mm)	Flow factors (L/min Qn	Admissible differential pressure bar Min	Max DC	Max AC	Fluid temp. °C Gas	Seat disc	Reference numbers Global valve reference	Valve reference no.	Housing	OR Coil	Power consumption (W) DC	Power consumption (W) AC	Wt. (g)	El. Part Group *	Dim ref.
1/4	8	1400	1	10	10	75	NBR	7347LMG2NNM0	**E347L1130**	**2995** 1	**481865** 1	9	8	-	2	3541
	8	1400	1	10	10	75	NBR			**4270** 1	**481000** 1	8	8	-	2	

Table continued on page 210

Notes:

* See Electrical Parts Group table at end of section

1. Please order two of these items per valve

Parker Lucifer SA
Fluid Control Division Europe
CH-1227 Carouge-Genève

Tel: +45 63 12 83 00 | Email: ps@hymatik.com | www.hymatik.com | Hvidkaervej 27a, DK-5250 Odense SV, Denmark

4-way pneumatic valves for pipe connection/sub-base mounting

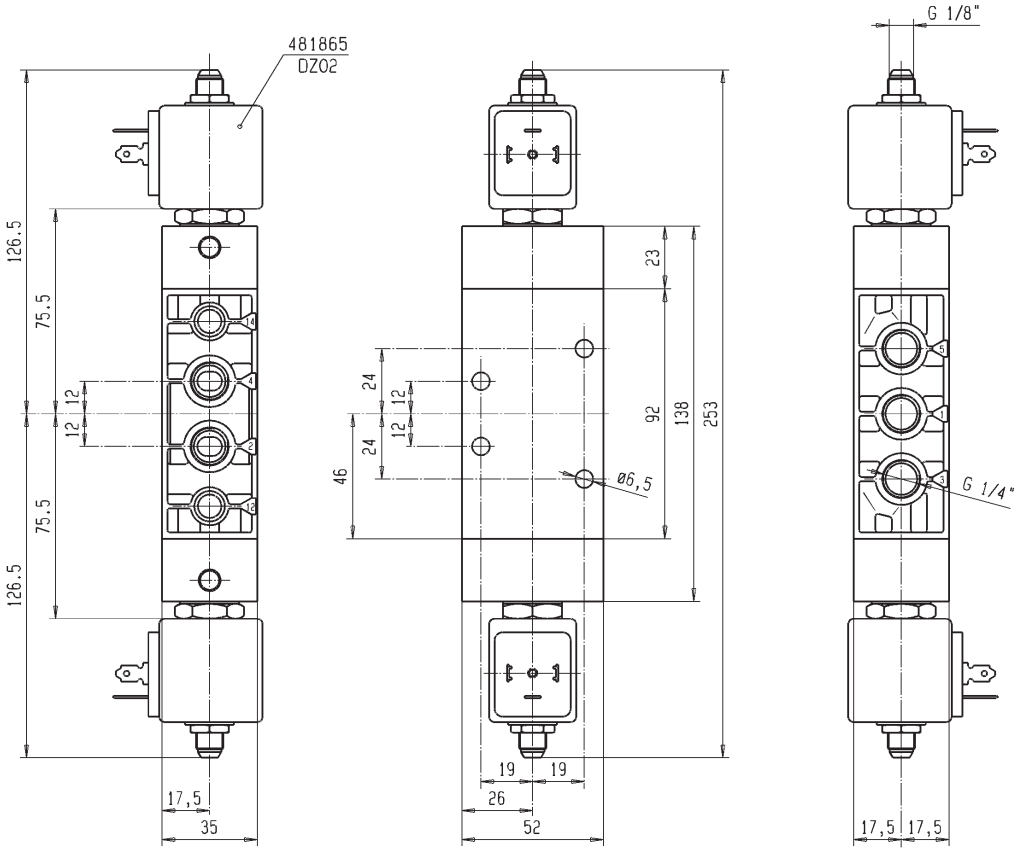

Dimension reference 3541

Parker Lucifer SA
Fluid Control Division Europe
CH-1227 Carouge-Genève

4-way pneumatic valves for pipe connection/sub-base mounting

Port size	Orifice (mm)	Flow factors (L/min	Admissible differential pressure bar			Fluid temp. °C	Seat disc	Reference numbers				Power consumption (W)		Wt. (g)	El. Part Group *	Dim ref.
			Min	Max				Global valve reference	Valve reference no.	Housing	Coil OR					
G		Qn		DC	AC	Gas						DC	AC			

Die-cast zinc body/Pipe mounting

5/2 - Double external pressure supply -

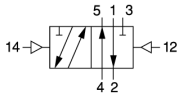

1/4	8	1400	0	10	10	75	NBR	7547LMG2NN00	**547L11**	-	-	-	-	-	-	118

Table continued on page 212

Notes:

* See Electrical Parts Group table at end of section

CANCELLED

Parker Lucifer SA
Fluid Control Division Europe
CH-1227 Carouge-Genève

4-way pneumatic valves for pipe connection/sub-base mounting

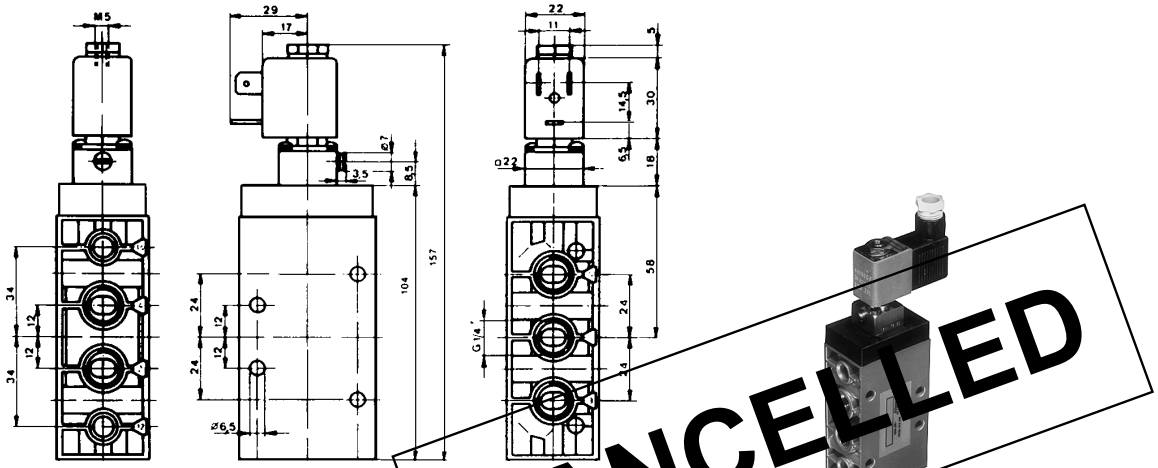

Dimension reference 118

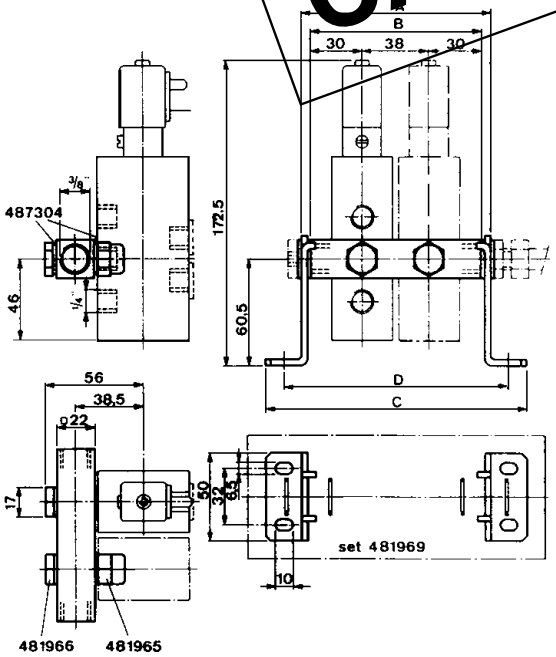

Quantity of valves by assembly	Feeder Ref.	A mm	B mm	C mm	D mm	Sealing 487304	Screw 481966	Set No. 481969
2	481964.02	108	98	149	128	4	2	1
3	481964.03	146	136	187	166	6	3	1
4	481964.04	184	174	225	204	8	4	1
5	481964.05	222	212	263	242	10	5	1
6	481964.06	260	250	301	280	12	6	1
7	481964.07	298	288	339	318	14	7	1
8	481964.08	336	326	377	356	16	8	1
9	481964.09	374	364	415	394	18	9	1
10	481964.10	412	402	453	432	20	10	1

Associated sub-base diagram

Parker Lucifer SA
Fluid Control Division Europe
CH-1227 Carouge-Genève

4-way pneumatic valves for pipe connection/sub-base mounting

Port size G	Orifice (mm)	Flow factors (L/min Qn	Admissible differential pressure bar Min	Max DC	Max AC	Fluid temp. °C Gas	Seat disc	Reference numbers Global valve reference	Valve reference no.	Housing	OR Coil	Power consumption (W) DC	Power consumption (W) AC	Wt. (g)	El. Part Group *	Dim ref.
Anod. aluminium body/Pipe mounting									**5/2 - Pilot operated -** 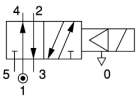							
1/2	14	2500	1	15	15	75	NBR	7341BAG4TN00	**E341B21**	**2995**	**481865**	9	8	1900	2	41
	14	2500	1	15	15	75	NBR			**4270**	**481000**	8	8	2000	2	
Anod. aluminium body/Pipe mounting									**5/2 - Impulse coil -** 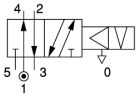							
1/2	14	2500	1	-	15	75	NBR	7345BAG4TN00	**345B24**	**4269**	**484990**	-	11	2000	4	41
	14	2500	1	15	-	75	NBR			**4269**	**485400**	13	-	2000	4	

Table continued on page 214

Notes:

* See Electrical Parts Group table at end of section

Parker Lucifer SA
Fluid Control Division Europe
CH-1227 Carouge-Genève

Tel: +45 63 12 83 00 | Email: ps@hymatik.com | www.hymatik.com | Hvidkaervej 27a, DK-5250 Odense SV, Denmark

4-way pneumatic valves for pipe connection/sub-base mounting

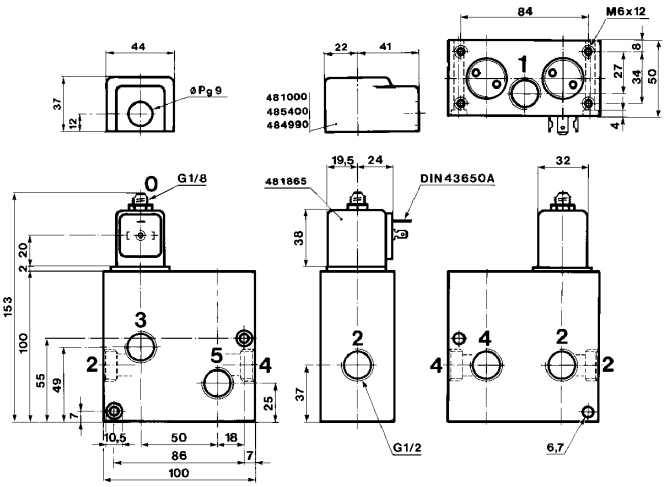

Dimension reference 41

Parker Lucifer SA
Fluid Control Division Europe
CH-1227 Carouge-Genève

Tel: +45 63 12 83 00 | Email: ps@hymatik.com | www.hymatik.com | Hvidkaervej 27a, DK-5250 Odense SV, Denmark

4-way pneumatic valves for pipe connection/sub-base mounting

Port size G	Orifice (mm)	Flow factors (L/min Qn	Admissible differential pressure bar Min	Max DC	Max AC	Fluid temp. °C Gas	Seat disc	Reference numbers Global valve reference	Valve reference no.	Housing	OR Coil	Power consumption (W) DC	Power consumption (W) AC	Wt. (g)	El. Part Group *	Dim ref.
Aluminium alloy and brass body/Sub-base mounting												**5/2 - Pilot operated -**	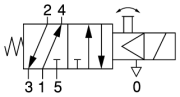			
SB	4	400	1	10	10	75	NBR	-	**341L9201**	**8993**	**488980**	2.5	2	230	1	119
Aluminium alloy and brass body/Sub-base mounting												**5/2 - Two solenoids and main pressure supply -**	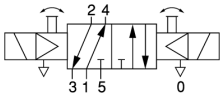			
SB	4	400	1	10	10	75	NBR	-	**347L9201**	**8993**	**488980** [1]	2.5	2	350	1	119

Table continued on page 216

Notes:

* See Electrical Parts Group table at end of section

1. Please order two of these items per valve

Parker Lucifer SA
Fluid Control Division Europe
CH-1227 Carouge-Genève

Tel: +45 63 12 83 00 | Email: ps@hymatik.com | www.hymatik.com | Hvidkaervej 27a, DK-5250 Odense SV, Denmark

4-way pneumatic valves for pipe connection/sub-base mounting

341L9201

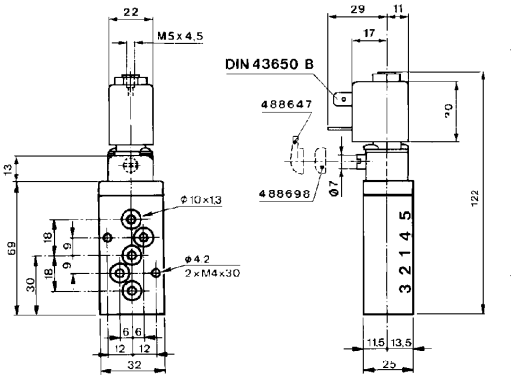

347L9201

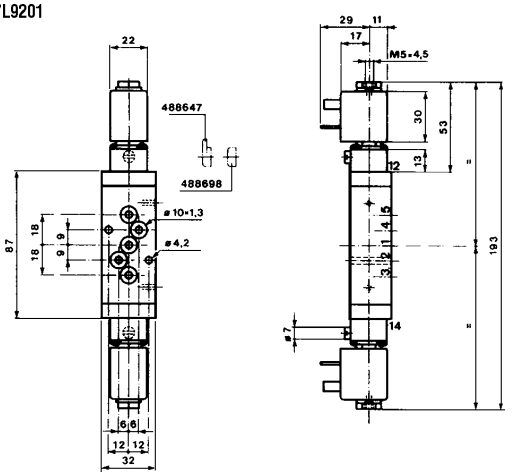

Dimension reference 119

Parker Lucifer SA
Fluid Control Division Europe
CH-1227 Carouge-Genève

Tel: +45 63 12 83 00 | Email: ps@hymatik.com | www.hymatik.com | Hvidkaervej 27a, DK-5250 Odense SV, Denmark

4-way pneumatic valves for pipe connection/sub-base mounting

Port size	Orifice (mm)	Flow factors (L/min	Admissible differential pressure bar			Fluid temp. °C	Seat disc	Reference numbers			OR	Power consumption (W)		Wt. (g)	El. Part Group *	Dim ref.
			Min	Max												
G		Qn		DC	AC	Gas		Global valve reference	Valve reference no.	Housing	Coil	DC	AC			

5/2 - Pilot operated -

Anod. aluminium body/Sub-base mounting

SB	15	3550	0.5	10	-	75	NBR	7341LAV4TN90	**341L2190** 1	-	**483580.01** 2	0.4	-	1205	7	82

Table continued on page 218

Notes:

* See Electrical Parts Group table at end of section

1. Other coil-housing available: 488650.01, 488660.01, 4888670.01 (refer to electrical parts at end of this section)
2. This reference no. is for the complete electrical part (coil + housing)

Parker Lucifer SA
Fluid Control Division Europe
CH-1227 Carouge-Genève

Tel: +45 63 12 83 00 | Email: ps@hymatik.com | www.hymatik.com | Hvidkaervej 27a, DK-5250 Odense SV, Denmark

4-way pneumatic valves for pipe connection/sub-base mounting

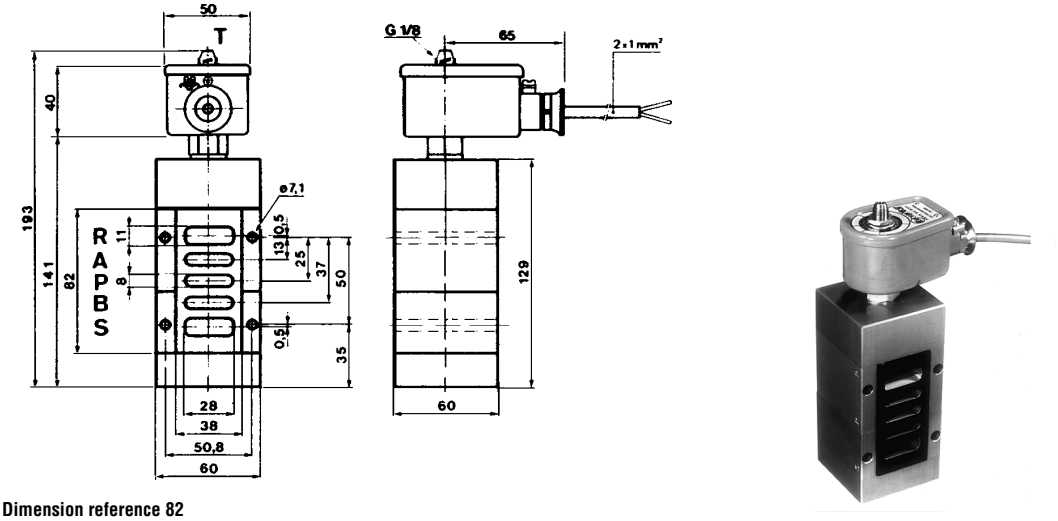

Dimension reference 82

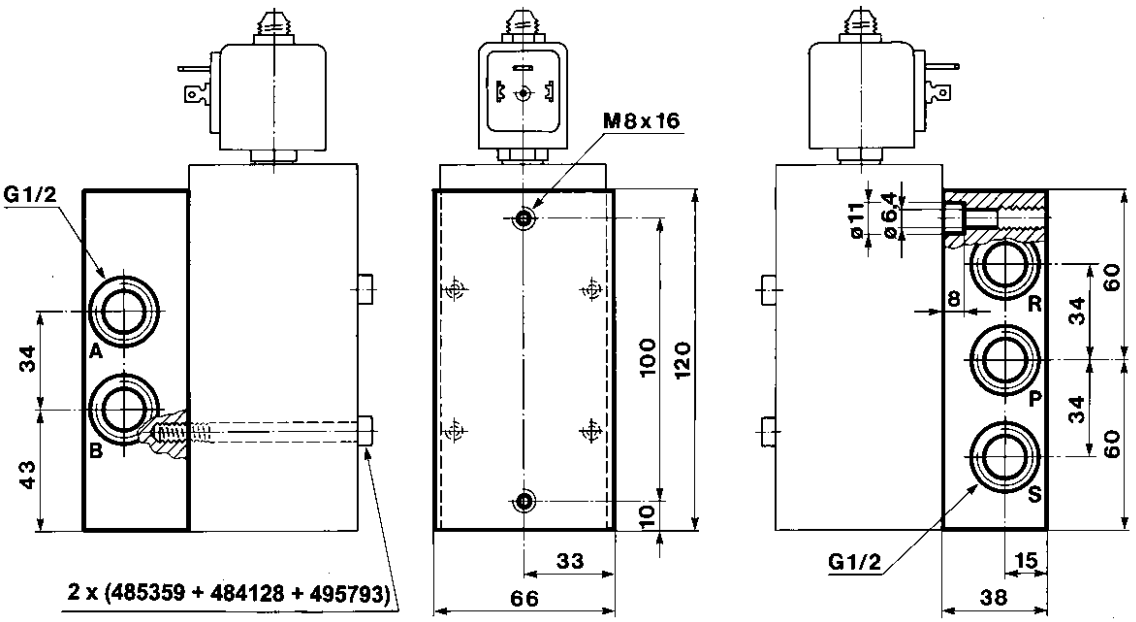

Associated sub-base diagram

Parker Lucifer SA
Fluid Control Division Europe
CH-1227 Carouge-Genève

Tel: +45 63 12 83 00 | Email: ps@hymatik.com | www.hymatik.com | Hvidkaervej 27a, DK-5250 Odense SV, Denmark

4-way pneumatic valves for pipe connection/sub-base mounting

Port size G	Orifice (mm)	Flow factors (L/min Qn	Admissible differential pressure bar Min	Max DC	Max AC	Fluid temp. °C Gas	Seat disc	Reference numbers Global valve reference	Valve reference no.	Housing	OR Coil	Power consumption (W) DC	Power consumption (W) AC	Wt. (g)	El. Part Group *	Dim ref.

Anod. aluminium body/Sub-base mounting

5/2 - Pilot operated -

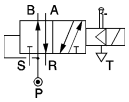

SB	15	5000	0.5	10	10	75	NBR	7341LAV4TNM0	**E341L21**	**2995**	**481865**	9	8	1240	2	91
	15	5000	0.5	10	10	75	NBR			**4270**	**481000**	8	8	1360	2	

Anod. aluminium body/Sub-base mounting

5/2 - Impulse coil -

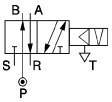

SB	15	5000	0.5	-	10	75	NBR	7345LAV4TNM0	**345L21**	**4269**	**484990**	-	11	1360	4	91
	15	5000	0.5	10	-	75	NBR			**4269**	**485400**	13	-	1360	4	

Delrin body/Sub-base mounting CETOP 1/8

5/2 - Pilot operated -

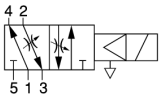

CETOP	6	800	1	10	-	75	NBR	7341LDC1LNL8	**341L0180**	**2995**	**482740**	1.6	-	430	6	47
	6	800	1	10	10	75	NBR	-	**341L04** 1	**8993**	**488980**	2.5	2	-	1	48
	6	800	1	10	10	75	NBR	-	**341L05** 2	**8993**	**488980**	2.5	2	-	1	48
	6	800	1	10	10	75	NBR	7341LDC1LNM8	**E341L01** 1	**2995**	**481865** 3	9	8	430	2	47
	6	800	1	10	10	75	NBR			**4270**	**481000** 3	8	8	560	2	
	6	800	1	10	10	75	NBR			**2995**	**482730**	7	6	430	2	
	6	800	1	10	10	75	NBR	7341LDC1LNMI	**E341L02** 2	**2995**	**481865**	9	8	420	2	47
	6	800	1	10	10	75	NBR			**4270**	**481000**	8	8	550	2	
	6	800	1	10	10	75	NBR			**2995**	**482730**	7	6	420	2	

Table continued on page 220

Notes:

* See Electrical Parts Group table at end of section

1. Manual override and flow regulating screws standard
2. Manual override standard
3. Switch-on time limited to 50% ED. For 100% ED please use coil ref. 482730

Parker Lucifer SA
Fluid Control Division Europe
CH-1227 Carouge-Genève

Tel: +45 63 12 83 00 | Email: ps@hymatik.com | www.hymatik.com | Hvidkaervej 27a, DK-5250 Odense SV, Denmark

4-way pneumatic valves for pipe connection/sub-base mounting

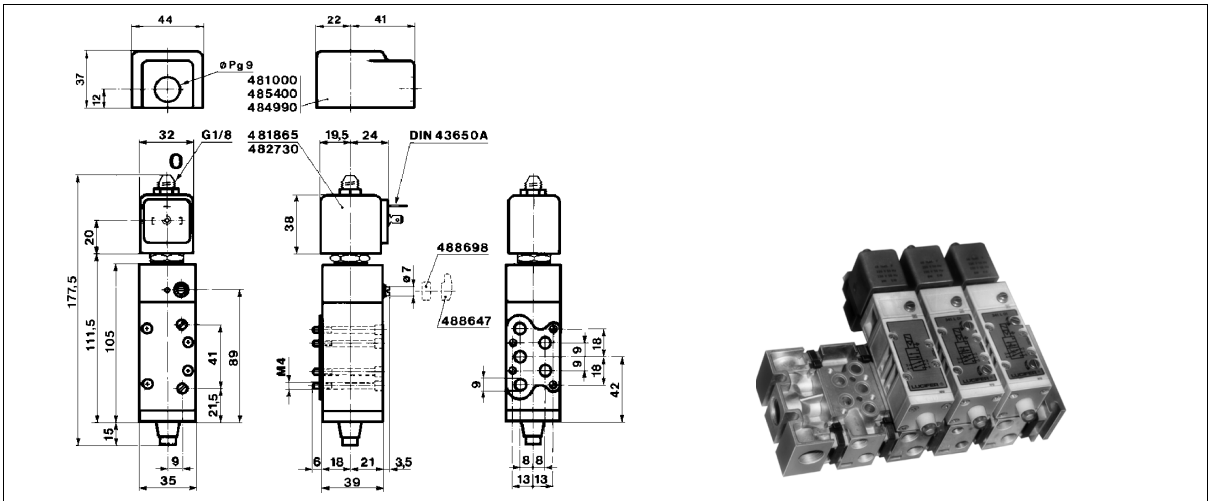

Dimension reference 47

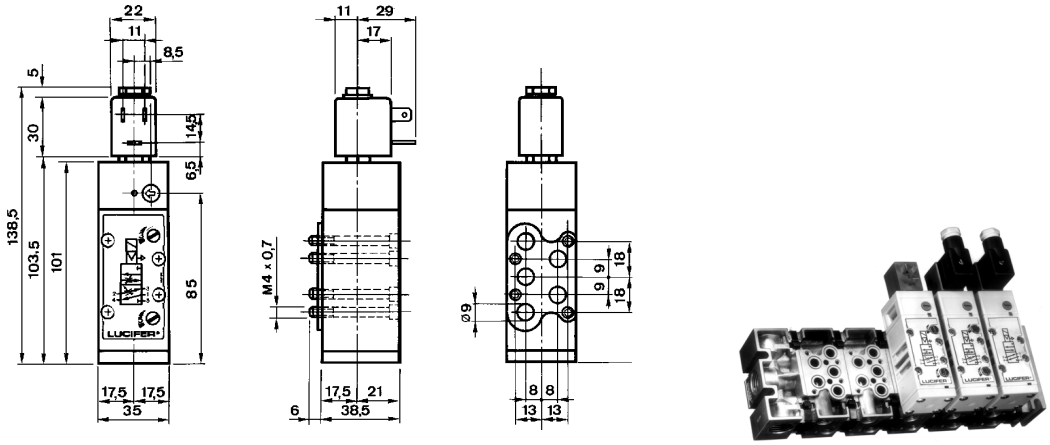

Dimension reference 48

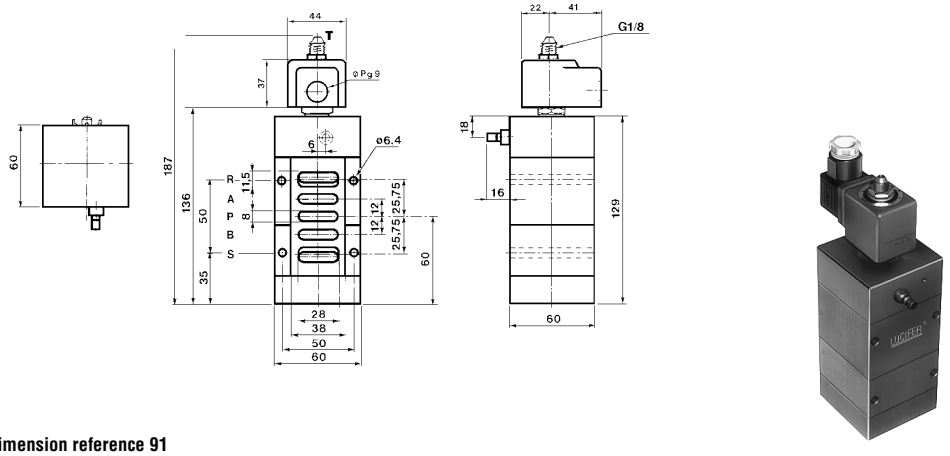

Dimension reference 91

Parker Lucifer SA
Fluid Control Division Europe
CH-1227 Carouge-Genève

4-way pneumatic valves for pipe connection/sub-base mounting

Port size G	Orifice (mm)	Flow factors (L/min Qn	Admissible differential pressure bar Min	Max DC	Max AC	Fluid temp. °C Gas	Seat disc	Reference numbers Global valve reference	Valve reference no.	Housing	OR Coil	Power consumption (W) DC	Power consumption (W) AC	Wt. (g)	El. Part Group *	Dim ref.
Delrin body/Sub-base mounting CETOP 1/8									**5/2 - External pressure supply -**							
CETOP	6	800	0	10	10	75	NBR	7541LDC1LNR0	**541L01** 1	-	-	-	-	360	-	90
Delrin body/Sub-base mounting CETOP 1/8									**5/2 - Impulse coil -**							
CETOP	6	800	1	-	10	75	NBR	7345LDC1LNM8	**345L01** 2	**4269**	**484990**	-	11	580	4	89
	6	800	1	10	-	75	NBR			**4269**	**485400**	13	-	580	4	

Notes:

* See Electrical Parts Group table at end of section

1. Flow regulating screws standard
2. Manual override and flow regulating screws standard

Parker Lucifer SA
Fluid Control Division Europe
CH-1227 Carouge-Genève

4-way pneumatic valves for pipe connection/sub-base mounting

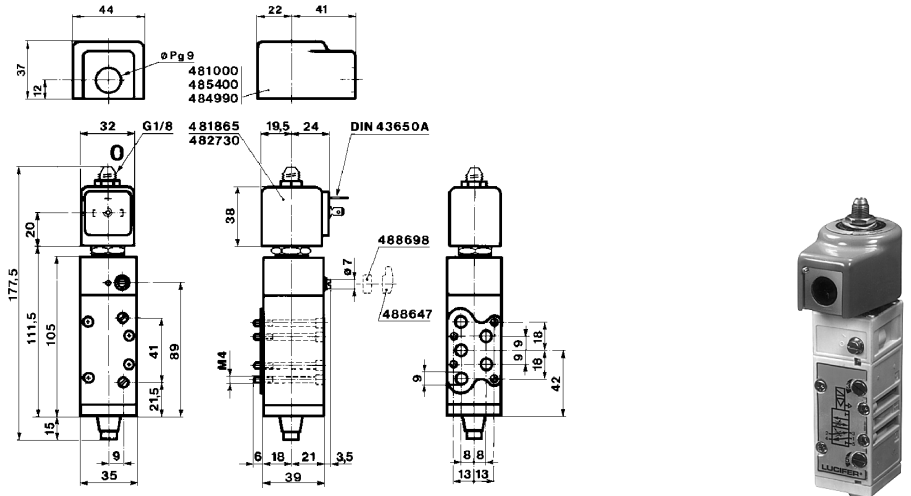

Dimension reference 89

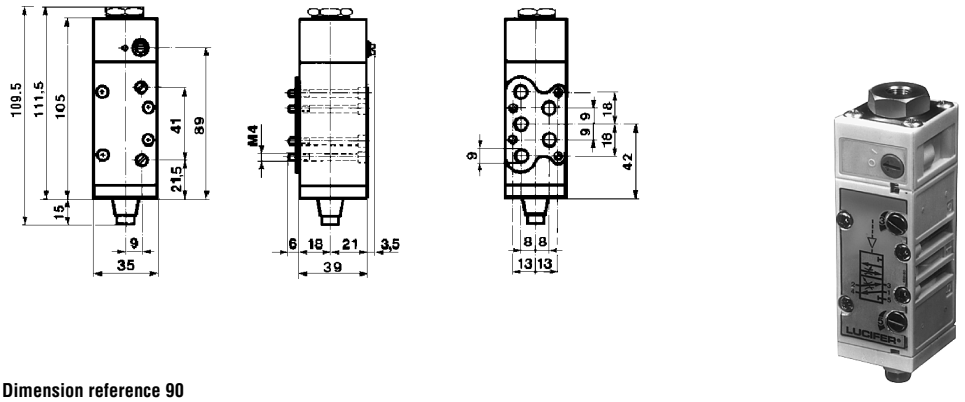

Dimension reference 90

Parker Lucifer SA
Fluid Control Division Europe
CH-1227 Carouge-Genève

4-way pneumatic valves for pipe connection/sub-base mounting

Manifold blocks for

E 341 L 01
E 341 L 02
345 L 01
541 L 01

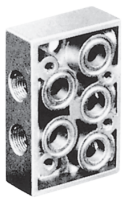

No. 486867, G 1/8

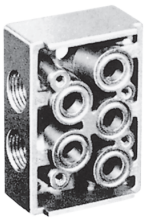

No. 486866, G 1/4

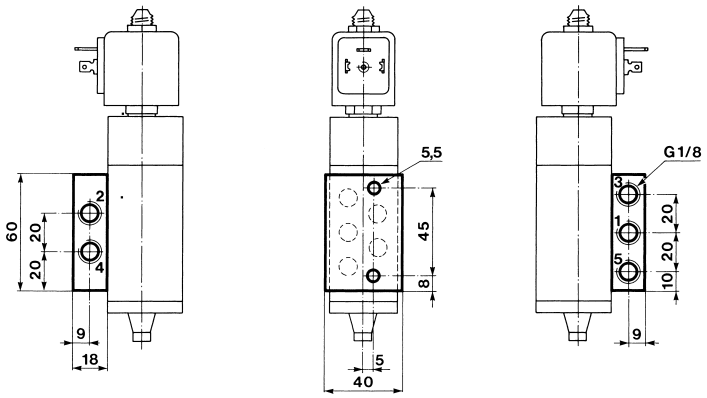

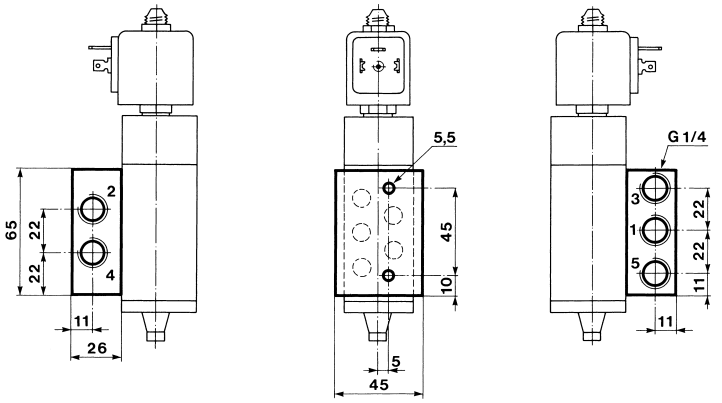

Installation information:
Each valve is supplied with four mounting screws and a performed seal in the valve body.

For modular assembly:
Uniform alloy modular elements
No. 486870, G 1/8
No. 486869, G 1/4

For single valves:
Uniform alloy sub-bases
No. 486867, G 1/8
No. 486866, G 1/4

Plugs:
No. 484285, G 1/8
No. 484083, G 1/4
No. 484174, G 1/2

Separating gasket:
No. 488252
A complete sealing gasket, made from synthetic rubber, can be inserted between two modular elements to separate a modular valve assembly into two independent control systems.

End plates:
Made from alloy these close off the modular elements.
No. 487816, G 1/4
No. 487734, G 1/2

Assembly kit:
No. 487744 containing
2 mounting clamps
1 preformed seal

Ordering example:
4 solenoid valves E 341 L 01
482995, 481865, 220/50
4 modular elements
No. 486870, G 1/8
2 end plates No. 487816, G 1/4
5 assembly kits (4 + 1)
No. 487744.

Parker Lucifer SA
Fluid Control Division Europe
CH-1227 Carouge-Genève

Tel: +45 63 12 83 00 | Email: ps@hymatik.com | www.hymatik.com | Hvidkaervej 27a, DK-5250 Odense SV, Denmark

4-way pneumatic valves for pipe connection/sub-base mounting

Modular Assembly

Accessories	Ref. No.	Weight
Modular elements	486870 486869	205 g
End plates	487816 487734	160 g 155 g
Assembly kit	487744	16 g
Separating gasket	488252	10 g
Plugs	484285 484083 484174	4 g 6 g 15 g

Quantity of valves by assembly	Dimensions				Quantity assembly kits
	A	B	C	D	
1	102	114	74	90	2
2	142	154	114	130	3
3	182	194	154	170	4
4	222	234	194	210	5
...n	62+40n	74+40n	34+40n	50+40n	n + 1

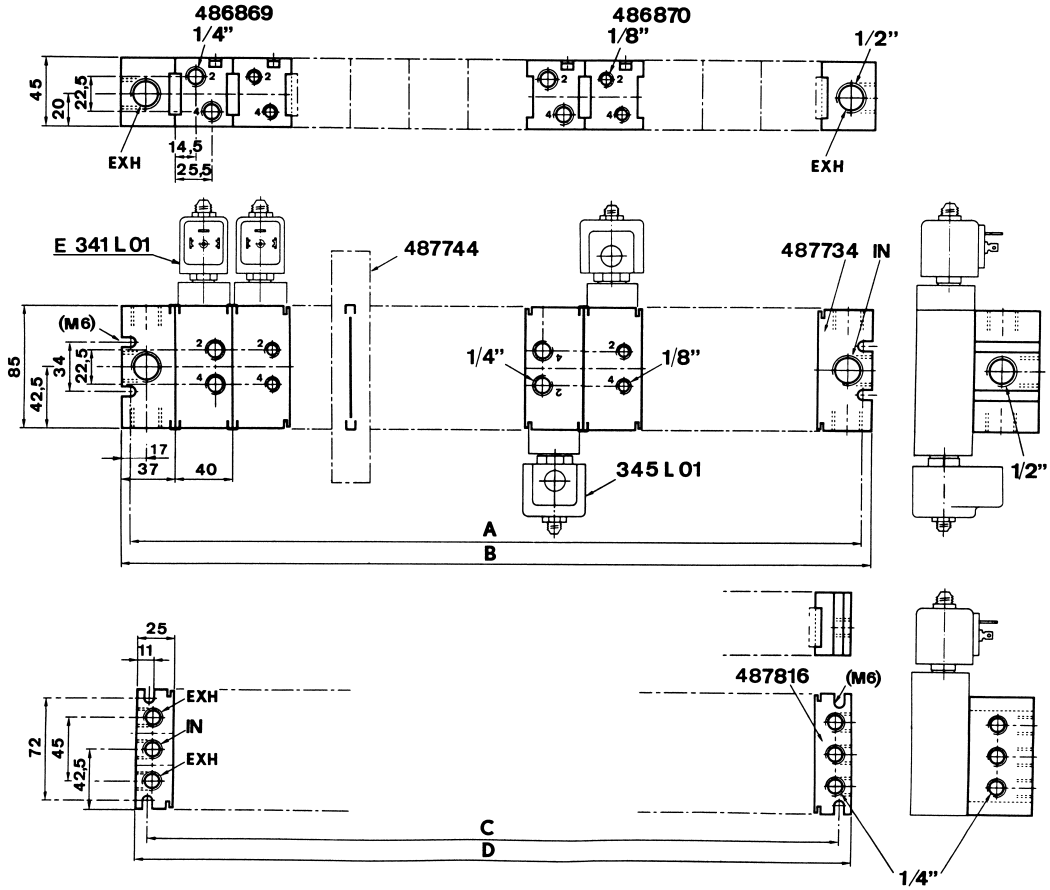

All valves models E 341 L 01, E 341 L 02, 345 L 01 and 541 L 01 can be manifold mounted on the same base.

Parker Lucifer SA
Fluid Control Division Europe
CH-1227 Carouge-Genève

Tel: +45 63 12 83 00 | Email: ps@hymatik.com | www.hymatik.com | Hvidkaervej 27a, DK-5250 Odense SV, Denmark

Electrical parts options with 4/2, 5/2 pneumatic valves

El.part Group	Coil	Protection class	Protection class / Temperature class	Power DC	Power AC	Coil Order No.	Coil Ref. No.	Connection	Housing Order No.	Housing Ref. No.	Ambient temp. min.	Ambient temp. max.
1	**22 mm**	IP 65	**Class F**	2.5 W	2 W	DA01	**488980**	for DIN plug	A0	**8993**	-40	50
		IP 65	**Class F**	2.5 W	2 W	DA02	**481045**	with DIN plug	A0	**8993**	-40	50
		IP 65	**Class F**	5 W	4 W	DA03	**481180**	for DIN plug	A0	**8993**	-40	50
		IP 65	**Class F**	5 W	4 W	DA04	**481530**	with DIN plug	A0	**8993**	-40	50
		IP 65	**EEx m II T4**	5 W	4 W	VA01	**482605**	with 1500mm cable	00	**-**	-40	50
		IP 65	**EEx m II T5**	2.5 W	2 W	VA02	**482606**	with 1500mm cable	00	**-**	-40	50
2	**32 mm** (Std)	IP 65	**Class F**	9 W	8 W	DZ02	**481865**	for DIN plug	N1	**2995**	-40	50
		IP 65		9 W	8 W	DZ03	**482725**	with DIN plug	N1	**2995**	-40	50
		IP 65	**Class H**	9 W	8 W	DZ04	**492453**	for DIN plug	N1	**2995**	-40	50
		IP 65		9 W	8 W	DZ05	**492726**	with DIN plug	N1	**2995**	-40	50
		IP 65	**Class F, 50/60 Hz**	-	9 W	DZ06	**483510**	for DIN plug	N1	**2995**	-40	50
		IP 65		-	9 W	DZ07	**482635**	with DIN plug	N1	**2995**	-40	50
		IP 65	**EEx m II T4**	9 W	8 W	HZ05	**492670**	with 3000mm cable	00	**-**	-40	40
		IP 65	**Class H**	14 W	14 W	DZ08	**492425**	for DIN plug	N1	**2995**	-40	50
		IP 65		14 W	14 W	DZ09	**492727**	with DIN plug	N1	**2995**	-40	50
	50 mm (Std)	IP10 / IP 44	**Class F**	8 W	8 W	EZ01	**481000**	screw-terminals	E0	**4270**	-40	50
		IP10 / IP 44	**Class H**	8 W	8 W	EZ02	**485100**	screw-terminals	E0	**4270**	-40	50
		IP10 / IP 44	**Class H**	14 W	14 W	EZ92	**486265**	screw-terminals	E0	**4270**	-40	50
		IP 67	**Class F, M20x1.5**	8 W	8 W	EZ01	**481000**	screw-terminals	G1	**4538**	-40	50
		IP 65	**EEx m II T5/T4**	9 W	8 W	VZ01	**492070**	with 1500mm cable	00	**-**	-40	40/65
		IP 67	**EEx me II T4**	8 W	8 W	HZ06	**483371**	for cable connection	00	**-**	-40	65
		IP 66	**EEx me II T3/T4**	11 W	9 W	VZ03	**492190**	for cable connection	00	**-**	-40	75/40
3	**32 mm**	IP 65	**Class H**	-	14 W	DZ08	**492425**	for DIN plug	N1	**2995**	-40	50
4	**50 mm (impulse)**	IP10 / IP 44	**Class F**	-	11 W	MZ01	**484990**	screw-terminals	E1	**4269**	-40	50
		IP10 / IP 44	**Class F**	13 W	-	MZ02	**485400**	screw-terminals	E1	**4269**	-40	50
5	**50 mm**	IP 54	**EEx d IIC T4/T5/T6**	8 W	8 W	HZ08	**483250**	for cable 1/2 NPT	00	**-**	-40	80/75/60
6	**32 mm (Miniwatt)**	IP 65	**Class F**	1.6 W	-	DZ10	**482740**	for DIN plug	N1	**2995**	-40	50
		IP 65	**Class F**	1.6W	-	DZ11	**482745**	with DIN plug	N1	**2995**	-40	50
	50 mm (Miniwatt)	IP 67	**EEx me II T5**	2.5 W	-	VZ04	**491117**	for cable connection	00	**-**	-40	65
		IP 67	**EEx m II T5/T4**	2.5 W	2.5 W	VZ05	**492370**	with 1500mm cable	00	**-**	-40	40/65
		IP 66	**EEx me II T6/T5**	2.5 W	2.5 W	VZ06	**492390**	for cable connection	00	**-**	-40	40/75
7	**32 mm**	IP 65	**EEx ia II C T6**	0.4 W	-	DZ12	**483580.01**	for DIN plug	N1	**2995**	-40	55
		IP 65		0.4 W	-	DZ13	**483960.01**	with DIN plug	N1	**2995**	-40	55
	50 mm	IP 66	**EEx ia II C T6**	0.4 W	-	VZ07	**488650.01**	for cable connection	00	**-**	-40	65
		IP 67		0.4 W	-	VZ08	**488660.01**	with 2000mm cable	00	**-**	-40	65
		IP 65		0.4 W	-	VZ09	**488670.01**	with DIN plug	00	**-**	-40	65

Note: This table is indicative only. Please contact your distributor to confirm your selection.

Parker Lucifer SA
Fluid Control Division Europe
CH-1227 Carouge-Genève

Solenoid valves for actuator control

ACTUATION	CONNECTION	ORIFICE (MM)	MAX. PRESSURE (BAR)	PAGE
Direct operated	1/8	1.2 to 1.5	10.0	226
	1/4	1.5 to 5.0	16.0	226
Pilot operated	1/8	4.0	10.0	238/248
	1/4	8.0	10.0	244/250/254
Pilot operated - Integrated pilot	1/8	4.0	10.0	238
	1/4	8.0	10.0	242
Impulse coil	1/8	4.0	10.0	242
Two solenoids and main pressure supply	1/8	4.0	10.0	240/254
	1/4	8.0	10.0	246/252
Two solenoids and main pressure supply - Integrated pilot	1/8	4.0	10.0	240
	1/4	8.0	10.0	246
Pilot operated with external pressure supply	1/8	4.0	10.0	242
External pressure supply	1/8	4.0	10.0	244

Notes:

Parker Lucifer SA
Fluid Control Division Europe
CH-1227 Carouge-Genève

Solenoid valves for actuator control

3/2

Applications

3-way directional valves for control of single acting pneumatic actuators.



Brass body/Pipe mounting

Direct operated

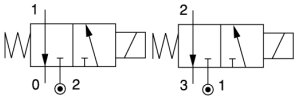

E, K, V Series T, M Series

Port size G	Orifice (mm)	Flow factors (L/min Qn	Admissible differential pressure bar Min	Max DC	Max AC	Fluid temp. °C Min	Fluid temp. °C Max	Seat disc	Reference numbers: Global valve reference	Reference numbers: Valve reference no.	Reference numbers: Housing	Reference numbers: OR Coil	Power consumption (W) DC	Power consumption (W) AC	Wt. (g)	El. Part Group *	Dim ref.
1/8	1.2	50	0	10	10	-10	75	FKM	-	**131M15**	**8993**	**488980**	2.5	2	150	1	14
	(1.5)	(70)	0	10	10	-10	75	FKM			**8993**	**488980**	2.5	2	150	1	
	1.5	70	0	7	7	-10	75	FKM	-	**131M14**	**8993**	**488980**	2.5	2	150	1	14
1/4	1	38	0	10	-	-10	75	FKM	7131KBG2CV90	**131K0490**	**-**	**483580.01** [1]	0.4	-	285	7	77
	1.5	80	0	7	-	-10	75	FKM	7131KBG2GVL5	**131K0480**	**2995**	**482740**	1.6	-	310	6	17
	1.5	80	0	15	15	-10	100	FKM	7131KBG2GVM0	**E131K0450** [2]	**2995**	**481865**	9	8	310	2	17
	1.5	80	0	15	15	-10	120	FKM			**4270**	**481000**	8	8	430	2	
	1.5	80	0	15	15	-10	100	FKM	7131KBG2GV00	**E131K04**	**2995**	**481865**	9	8	310	2	17
	1.5	80	0	15	15	-10	120	FKM			**4270**	**481000**	8	8	430	2	
	2	140	0	10	10	-10	100	FKM	7131KBG2JVM0	**E131K0650** [2]	**2995**	**481865**	9	8	310	2	17
	(2.5)	(220)	0	10	10	-10	100	FKM			**2995**	**481865**	9	8	310	2	
	2	140	0	10	10	-10	120	FKM			**4270**	**481000**	8	8	430	2	
	(2.5)	(220)	0	10	10	-10	120	FKM			**4270**	**481000**	8	8	430	2	
	2	140	0	10	10	-10	100	FKM	7131KBG2JV00	**E131K06**	**2995**	**481865**	9	8	310	2	17
	(2.5)	(220)	0	10	10	-10	100	FKM			**2995**	**481865**	9	8	310	2	
	2	140	0	10	10	-10	120	FKM			**4270**	**481000**	8	8	430	2	
	(2.5)	(220)	0	10	10	-10	120	FKM			**4270**	**481000**	8	8	430	2	

Table continued on page 228

Notes:

* See Electrical Parts Group table at end of section

1. Other coil-housing available: 488650.01, 488660.01, 4888670.01 (refer to electrical parts at end of this section)
2. Manual override standard

Values shown within brackets are valid for exhaust port only.

Parker Lucifer SA
Fluid Control Division Europe
CH-1227 Carouge-Genève

Tel: +45 63 12 83 00 | Email: ps@hymatik.com | www.hymatik.com | Hvidkaervej 27a, DK-5250 Odense SV, Denmark

Solenoid valves for actuator control - 3/2 valves - Pipe connection

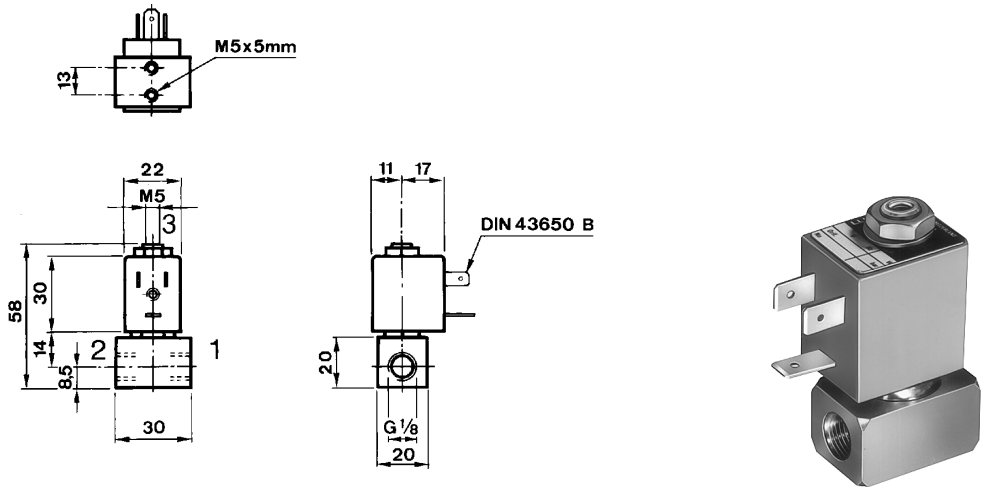

Dimension reference 14

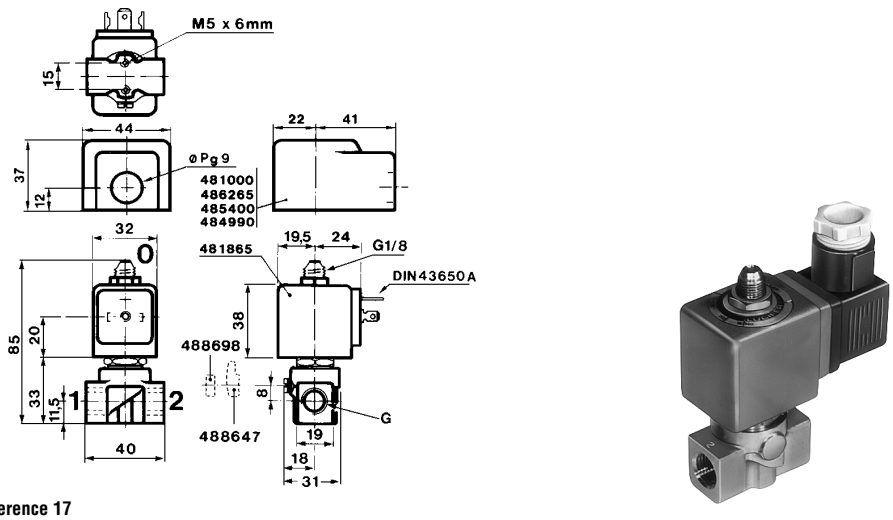

Dimension reference 17

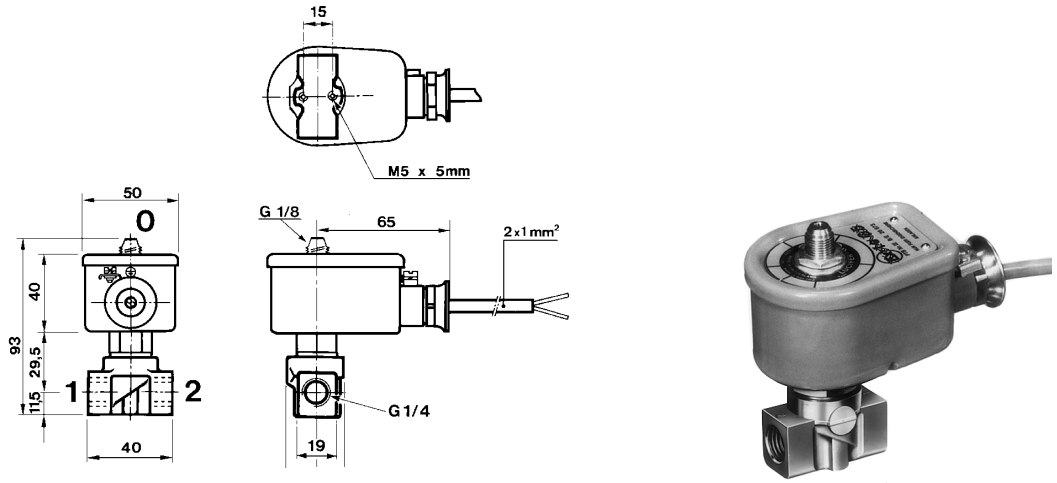

Dimension reference 77

Parker Lucifer SA
Fluid Control Division Europe
CH-1227 Carouge-Genève

Solenoid valves for actuator control - 3/2 valves - Pipe connection

Port size G	Orifice (mm)	Flow factors (L/min Qn	Admissible differential pressure bar Min	Max DC	Max AC	Fluid temp. °C Min	Max	Seat disc	Reference numbers Global valve reference	Valve reference no.	Housing	OR Coil	Power consumption (W) DC	AC	Wt. (g)	El. Part Group *	Dim ref.

Brass body/Pipe mounting

Direct operated

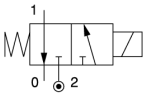

1/4	2	140	0	10	10	-40	80	PUR	7131KBG2JP1D	**E131K06081D** 1	**-**	**483250**	8	8	1255	5	3845
	2.5	220	0	7	7	-10	100	FKM	7131KBG2LVM0	**E131K0350** 2	**2995**	**481865**	9	8	310	2	17
	2.5	220	0	7	7	-10	120	FKM			**4270**	**481000**	8	8	430	2	
	2.5	220	0.1	7	7	-10	75	NBR	7131EBG2LN00	**E131E03**	**2995**	**481865**	9	8	650	2	19
	(6)	(1100)	0.1	7	7	-10	75	NBR			**2995**	**481865**	9	8	650	2	
	2.5	220	0.1	7	7	-10	75	NBR			**4270**	**481000**	8	8	770	2	
	(6)	(1100)	0.1	7	7	-10	75	NBR			**4270**	**481000**	8	8	770	2	
	2.5	220	0	7	7	-10	80	NBR	7131KBG2LV1D	**E131K03001D**	**-**	**483250**	8	8	1255	5	3845
	2.5	220	0	7	7	-40	75	PUR	7131KBG2LP1D	**E131K03081D** 1	**-**	**483250**	8	8	1255	5	3845
	2.5	220	0	7	7	-40	75	PUR	7131KBG2LP00	**E131K0308** 1	**2995**	**481865**	9	8	180	2	17
	2.5	220	0	7	7	-40	75	PUR			**4270**	**481000**	8	8	180	2	
	2.5	220	0	7	7	-40	75	PUR	7131KBG2LPM0	**E131K0358** 2	**2995**	**481865** 1	9	8	180	2	17
	2.5	220	0	7	7	-40	75	PUR			**4270**	**481000** 1	8	8	180	2	

Brass body/Pipe mounting

Direct operated

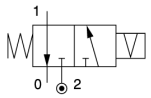

1/4	1.5	80	0	-	16	-10	100	FKM	7135KBG2GV00	**135K04**	**4269**	**484990**	-	11	450	4	17
	1.5	80	0	16	-	-10	100	FKM			**4269**	**485400**	13	-	450	4	
	2.5	220	0	-	7	-10	100	FKM	7135KBG2LV00	**135K03**	**4269**	**484990**	-	11	450	4	17
	2.5	220	0	7	-	-10	100	FKM			**4269**	**485400**	13	-	450	4	

Table continued on page 230

Notes:

* See Electrical Parts Group table at end of section

1. Operates with low temperatures down to -40 deg. C
2. Manual override standard

Values shown within brackets are valid for exhaust port only.

Parker Lucifer SA
Fluid Control Division Europe
CH-1227 Carouge-Genève

Tel: +45 63 12 83 00 | Email: ps@hymatik.com | www.hymatik.com | Hvidkaervej 27a, DK-5250 Odense SV, Denmark

Solenoid valves for actuator control - 3/2 valves - Pipe connection

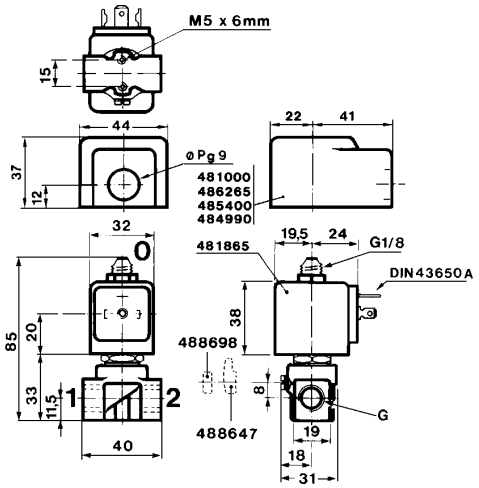



Dimension reference 17

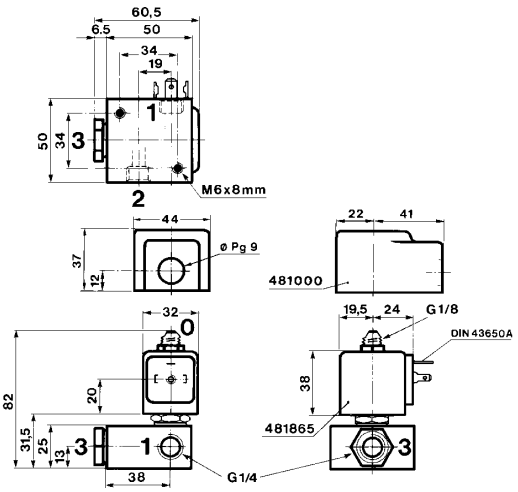



Dimension reference 19

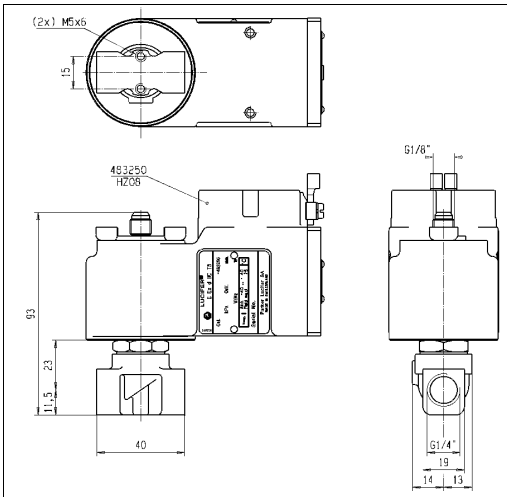

Dimension reference 3845

Parker Lucifer SA
Fluid Control Division Europe
CH-1227 Carouge-Genève

Solenoid valves for actuator control - 3/2 valves - Pipe connection

Port size	Orifice (mm)	Flow factors (L/min	Admissible differential pressure bar			Fluid temp. °C		Seat disc	Reference numbers			OR	Power consumption (W)		Wt. (g)	El. Part Group *	Dim ref.
			Min	Max		Min	Max		Global valve reference	Valve reference no.	Housing	Coil	DC	AC			
G		Qn		DC	AC												
Anod. aluminium body/Pipe mounting												Direct operated					
1/4	5	680	0	10	-	-25	65	NBR	-	**133X01** [1]	-	**492965.01** [2]	0.8	-	860	9	83
	5	680	0	10	10	-25	65	NBR			-	**492300** [2]	6	6	860	9	
Anod. aluminium body/NAMUR interface												Direct operated					
1/4	5	680	0	10	10	-25	75	NBR	7131XAKLVN00	**131X1101**	-	**492300** [2]	6	6	1000	9	84
	5	680	0	10	-	-25	75	NBR			-	**483330.01** [2]	0.85	-	1000	9	

Notes:

* See Electrical Parts Group table at end of section

1. Optional manual override available on request - add suffix 50 to the basic reference number
2. This reference no. is for the complete electrical part (coil + housing)

Parker Lucifer SA
Fluid Control Division Europe
CH-1227 Carouge-Genève

Solenoid valves for actuator control - 3/2 valves - Pipe connection

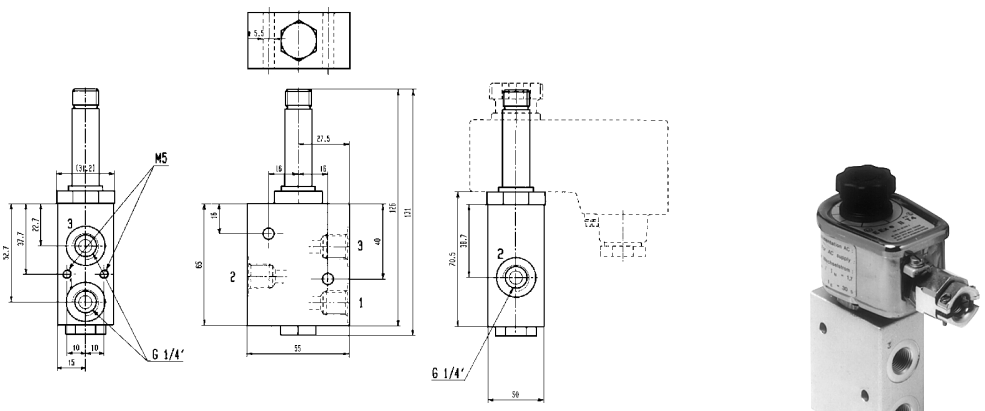

Dimension reference 83

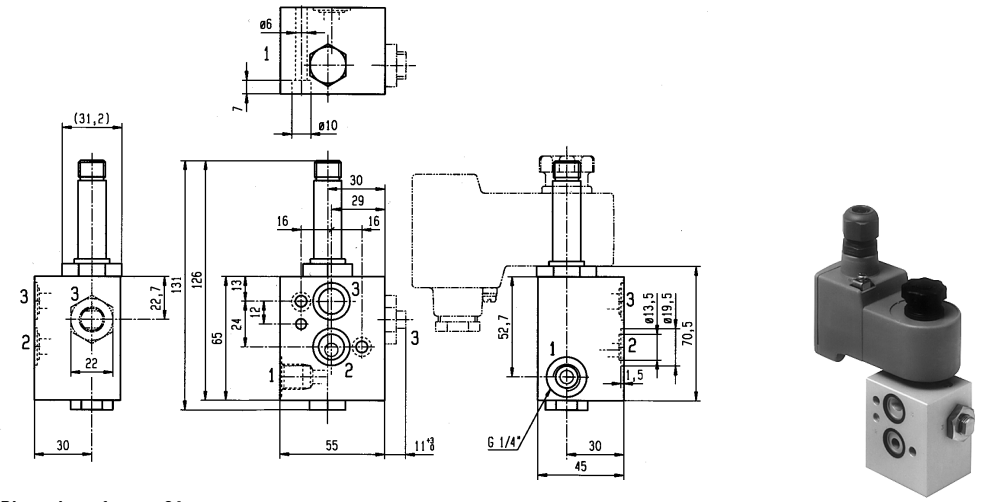

Dimension reference 84

Parker Lucifer SA
Fluid Control Division Europe
CH-1227 Carouge-Genève

Parker Lucifer SA
Fluid Control Division Europe
CH-1227 Carouge-Genève

Stackable solenoid valves for actuator control 3/2

ACTUATION	CONNECTION	ORIFICE (MM)	MAX. PRESSURE (BAR)	PAGE
Direct operated	6 6 6	1.3 to 1.5	10.0	234
	8 6 8	1.3 to 1.5	10.0	234
	- 6 -	1.3 to 1.5	10.0	234

Notes:

Parker Lucifer SA
Fluid Control Division Europe
CH-1227 Carouge-Genève

Tel: +45 63 12 83 00 | Email: ps@hymatik.com | www.hymatik.com | Hvidkaervej 27a, DK-5250 Odense SV, Denmark

TECHNICAL DATA

Valve function	3/2 solenoid valve, normally closed
Valve design	Direct operated poppet valve.
Mounting	Direct pipe mounting (single valve) by self tapping screws 3.6x16 Battery mounting screws M4x10mm (supplied with the valves) For battery on DIN rail EN50022/35mm kit No. 494205 (fixing plate + screws). For battery mounting: recommended maximum number of valves operating simultaneously: 10 valves for 8 mm / 6 valves for 6 mm
Mounting position	Unrestricted.
Material specifications	Body made of Polyamid PA66 33%GF. Internal parts from stainless steel. Sealing material from synthetic rubber (FKM).
Manual override	Screw driver operated manual override is standard. Horizontal position of the slot on the screw head corresponds to the «closed» valve position; vertical position = «open».
Media	Dry or lubricated air, inert gases
Lubrication	Not required.
Fluid temperature	Min. – 10°C Max. +75°C
Ambient temperature	– 10 °C up to + 50°C.
Voltage tolerance	– 10% to +15% of nominal.
Class of insulation material	Class F 155°C
Solenoid duty	Continuous duty solenoid
Life expectancy	Indicative: 10 Mio. cycles

Single valve

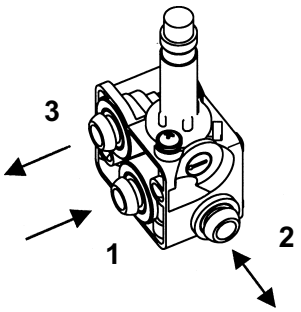

Stackable valves

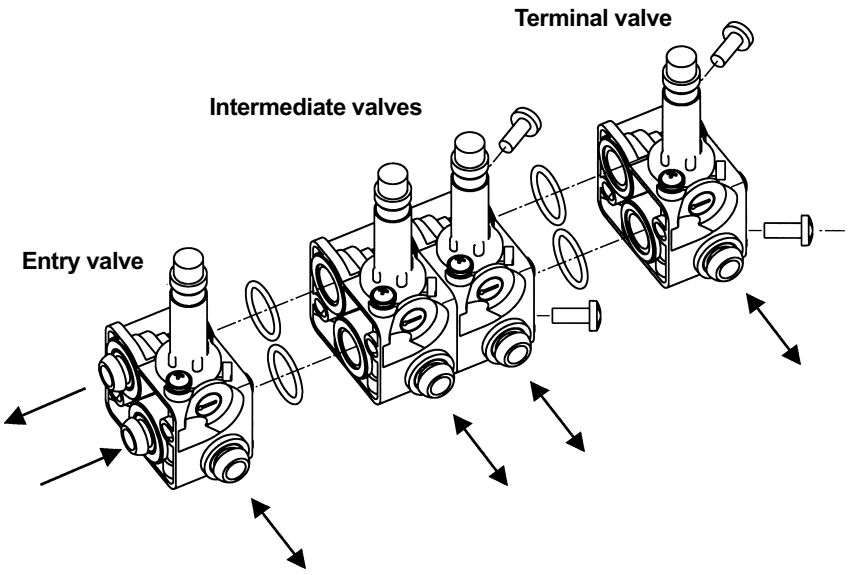

Parker Lucifer SA
Fluid Control Division Europe
CH-1227 Carouge-Genève

Tel: +45 63 12 83 00 | Email: ps@hymatik.com | www.hymatik.com | Hvidkaervej 27a, DK-5250 Odense SV, Denmark

VALVE TYPES OVERVIEW

Push-in Connection Ø (mm)	Orifice (mm)	Qn L/min	Pressure (Bar) min	Pressure (Bar) max	Max media temp. (°C)	Seat Disc Material	**Valve reference**	El. Parts group

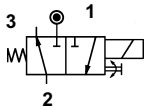

SINGLE VALVE

1	**2**	**3**	**1 = Inlet - 2 = user - 3 = exhaust**							
6	6	6	1.5	50	0	7	75	FKM	**2131TNF6GVMS**	**1**
6	6	6	1.3 (1.5)	50 (62)	0	10	75	FKM	**2131TNF6EVMS**	

STACKABLE

Entry Valve

6	6	6	1.5	62	0	7	75	FKM	**2131TNF6GVME**	**1**
8	6	8	1.5	62	0	7	75	FKM	**2131TNF8GVME**	
6	6	6	1.3 (1.5)	50 (62)	0	10	75	FKM	**2131TNF6EVME**	
8	6	8	1.3 (1.5)	50 (62)	0	10	75	FKM	**2131TNF8EVME**	

Intermediate valve

–	6	–	1.5	62	0	7	75	FKM	**2131TNF6GVMI**	**1**
–	6	–	1.3 (1.5)	50 (62)	0	10	75	FKM	**2131TNF6EVMI**	

Terminal valve

–	6	–	1.5	62	0	7	75	FKM	**2131TNF6GVMT**	**1**
–	6	–	1.3 (1.5)	50 (62)	0	10	75	FKM	**2131TNF6EVMT**	

Note: Values shown within brackets are valid for exhaust port only.

ELECTRICAL DATA

Coil Ref. No.	**Coil Order No.**	Protection Class	Power W) DC	Power W) AC	Connection	Housing Ref. No.	**Housing Order No.**	Ambient temperature (°C) min	Ambient temperature (°C) max	El. Parts Group
488980	**DA01**	Without DIN Plug - Class F	2.5	2	DIN Plug	8993	**A0**	– 10	50	**1**
481045	**DA02**	With DIN Plug Class F IP65	2.5	2	DIN Plug	8993	**A0**	– 10	50	
482606	**VA02**	EEx m II T5 – IP65	2.5	2	Cable 1500 mm	–	**–**	– 40	50	

Parker Lucifer SA
Fluid Control Division Europe
CH-1227 Carouge-Genève

Tel: +45 63 12 83 00 | Email: ps@hymatik.com | www.hymatik.com | Hvidkaervej 27a, DK-5250 Odense SV, Denmark

MOUNTING ON DIN RAIL

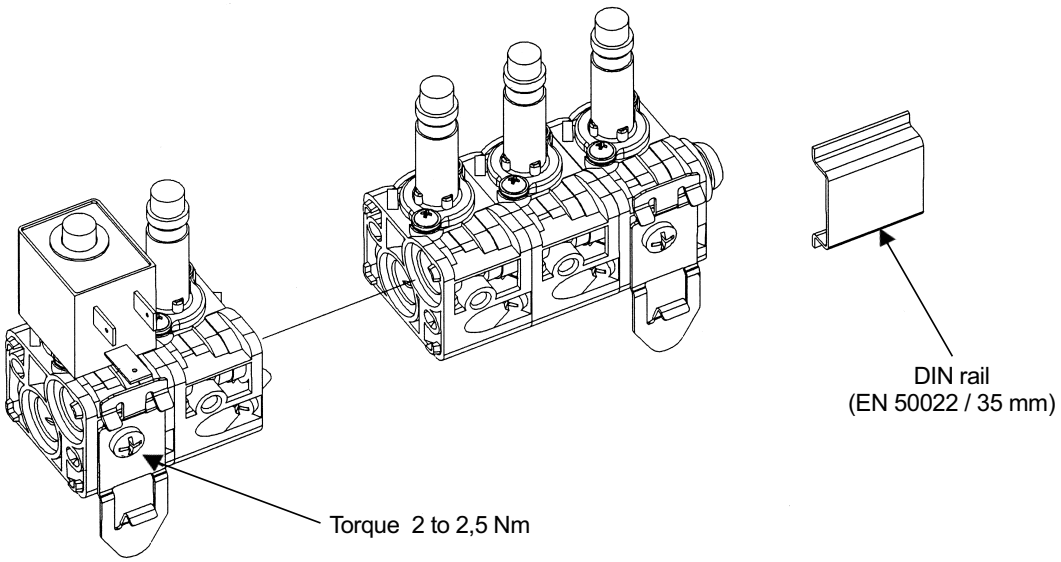

ACCESSORIES

Fixing kit for DIN rail EN 50022 / 35mm

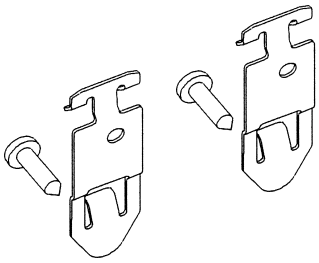

494205

2 x mounting plates
2 x Screws Ø 4.2 x 16

To be ordered separately

SPARE PARTS KIT

Spare parts kit for stackable valve

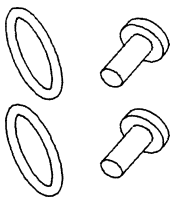

495102

2 x Screws M4 x 10
2 x O-Rings Øint. 14 x 1.78

Supplied with valves

Parker Lucifer SA
Fluid Control Division Europe
CH-1227 Carouge-Genève

Tel: +45 63 12 83 00 | Email: ps@hymatik.com | www.hymatik.com | Hvidkaervej 27a, DK-5250 Odense SV, Denmark

DIMENSIONAL DRAWINGS

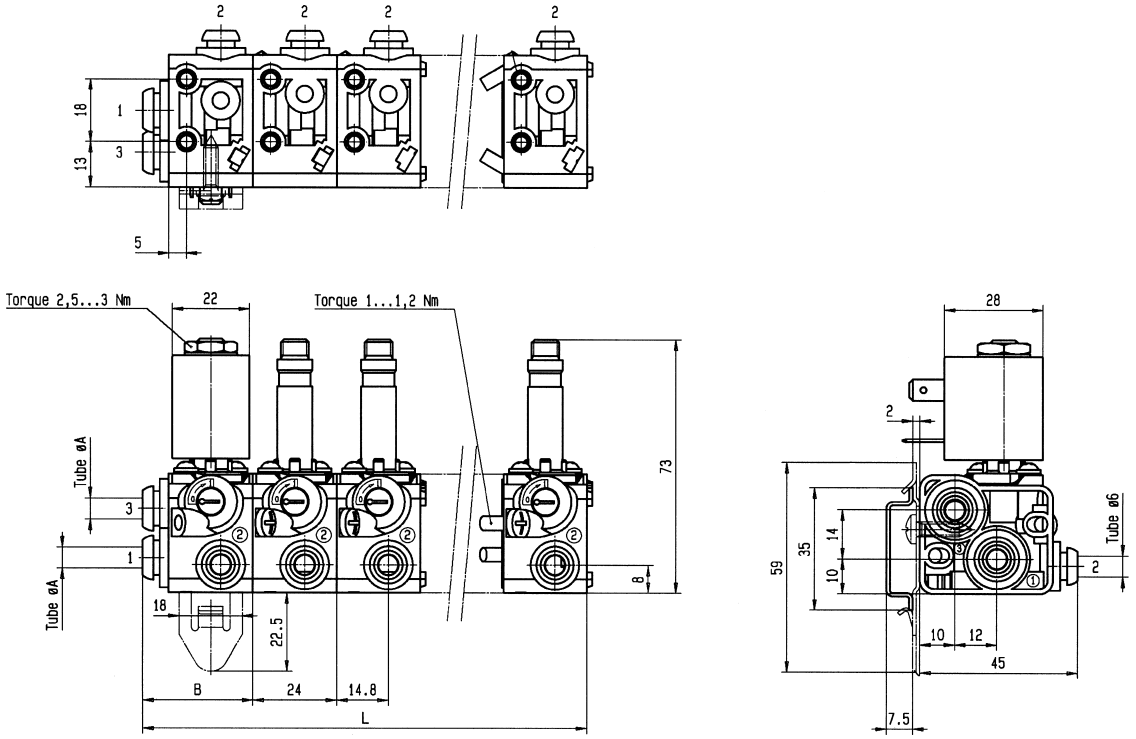

Unit weight without coil: 50 g.

Ø A [mm]	6	8
B [mm]	29	34
L [mm]	24 (n-1) + 29	24 (n-1) + 34
n = number of valves, maximum recommended = 10		

Parker Lucifer SA
Fluid Control Division Europe
CH-1227 Carouge-Genève

Tel: +45 63 12 83 00 | Email: ps@hymatik.com | www.hymatik.com | Hvidkaervej 27a, DK-5250 Odense SV, Denmark

Solenoid valves for actuator control

5/2

Applications

3- or 4-way directional valves for control of single or double acting pneumatic actuators.



Port size G	Orifice (mm)	Flow factors (L/min) Qn	Admissible differential pressure bar Min	Max DC	Max AC	Fluid temp. °C Min	Fluid temp. °C Max	Seat disc	Reference numbers: Global valve reference	Valve reference no.	OR Housing	OR Coil	Power consumption (W) DC	Power consumption (W) AC	Wt. (g)	El. Part Group *	Dim ref.
Pilot operated - Integrated pilot																	
1/8	4	600	2	10	10	-25	80	NBR	2341PAG1JNM0	**341P01** 1	**8993**	**488980**	2.5	2	310	1	201

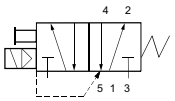

Anod. aluminium body/Pipe mounting - Spool design

Pilot operated

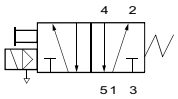

1/8	4	600	2	10	10	-25	80	NBR	7341PAG1JNM0	**341P21**	**2995**	**481865**	9	8	360	2	202
	4	600	2	10	10	-25	80	NBR			**4270**	**481000**	8	8	470	2	
	4	600	2	10	10	-40	65	NBR	7341PAG1JPM0	**341P2108** 2	**2995**	**481865**	9	8	360	2	202
	4	600	2	10	10	-40	65	NBR			**4270**	**481000**	8	8	470	2	
	4	600	2	10	-	-25	80	NBR	7341PAG1JNL2	**341P2180**	**2995**	**482740**	1.6	-	470	6	202
	4	600	2	10	-	-25	80	NBR	7341PAG1JN90	**341P2190**	**-**	**483580.01** 3	0.4	-	470	7	7351

Table continued on page 240

Notes:

* See Electrical Parts Group table at end of section

1. Manual override standard
2. Operates with low temperatures down to -40 deg. C
3. Other coil-housing available: 488650.01, 488660.01, 4888670.01 (refer to electrical parts at end of this section)

Parker Lucifer SA
Fluid Control Division Europe
CH-1227 Carouge-Genève

Tel: +45 63 12 83 00 | Email: ps@hymatik.com | www.hymatik.com | Hvidkaervej 27a, DK-5250 Odense SV, Denmark

Solenoid valves for actuator control - 5/2 valves - Pipe connection-Spool design

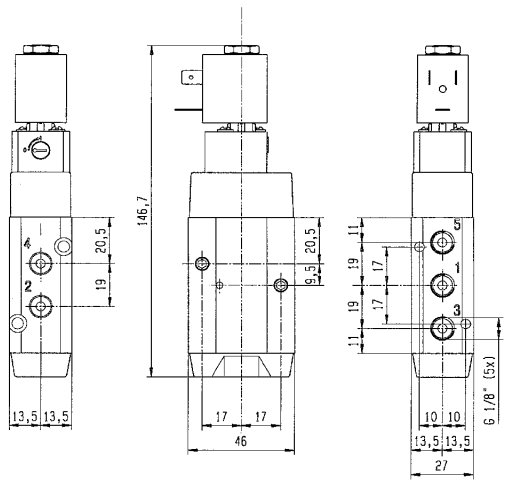



Dimension reference 201

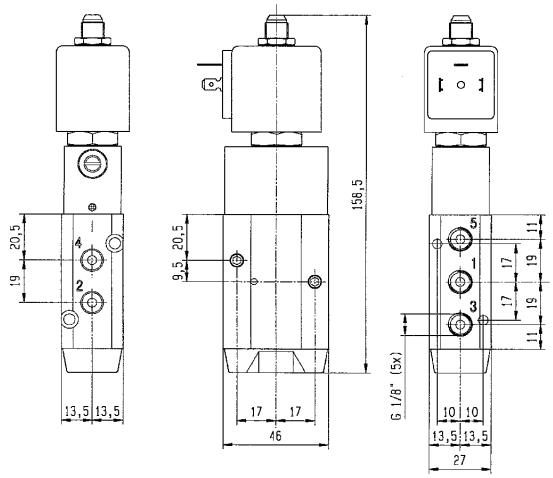



Dimension reference 202

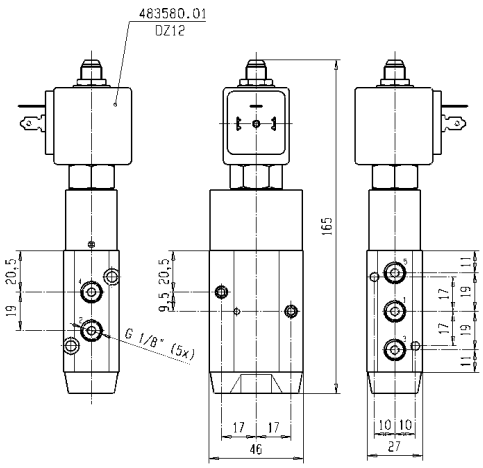



Dimension reference 7351

Parker Lucifer SA
Fluid Control Division Europe
CH-1227 Carouge-Genève

Solenoid valves for actuator control - 5/2 valves - Pipe connection-Spool design

Port size G	Orifice (mm)	Flow factors (L/min) Qn	Admissible differential pressure bar Min	Max DC	Max AC	Fluid temp. °C Min	Fluid temp. °C Max	Seat disc	Reference numbers: Global valve reference	Valve reference no.	Housing	OR Coil	Power consumption (W) DC	Power consumption (W) AC	Wt. (g)	El. Part Group *	Dim ref.
Pilot operated 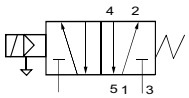																	
Anod. aluminium body/Pipe mounting - Spool design																	
1/8	4	600	2	10	10	-25	65	NBR	7341PAG1JN1D	**341P21001D**	-	**483250**	8	8	1450	5	7636
Two solenoids and main pressure supply - Integrated pilot 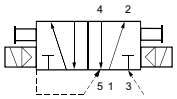																	
Anod. aluminium body/Pipe mounting - Spool design																	
1/8	4	400	2	10	10	-25	80	NBR	2347PAG1HNM0	**347P01**	**8993**	**488980** [1]	2.5	2	460	1	207
Two solenoids and main pressure supply 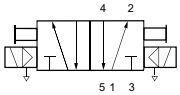																	
Anod. aluminium body/Pipe mounting - Spool design																	
1/8	4	400	2	10	10	-25	80	NBR	7347PAG1HNM0	**347P21**	**2995**	**481865** [1]	9	8	500	2	206
	4	400	2	10	10	-25	80	NBR			**4270**	**481000** [1]	8	8	720	2	
Two solenoids and main pressure supply 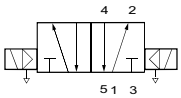																	
Anod. aluminium body/Pipe mounting - Spool design																	
1/8	4	400	2	10	-	-25	80	NBR	7347PAG1HN90	**347P2190**	-	**483580.01** [2]	0.4	-	720	7	206

Table continued on page 242

Notes:

* See Electrical Parts Group table at end of section

1. Please order two housings and coils for each valve
2. Other coil-housing available: 488650.01, 488660.01, 4888670.01 (refer to electrical parts at end of this section)

Parker Lucifer SA
Fluid Control Division Europe
CH-1227 Carouge-Genève

Tel: +45 63 12 83 00 | Email: ps@hymatik.com | www.hymatik.com | Hvidkaervej 27a, DK-5250 Odense SV, Denmark

Solenoid valves for actuator control - 5/2 valves - Pipe connection-Spool design

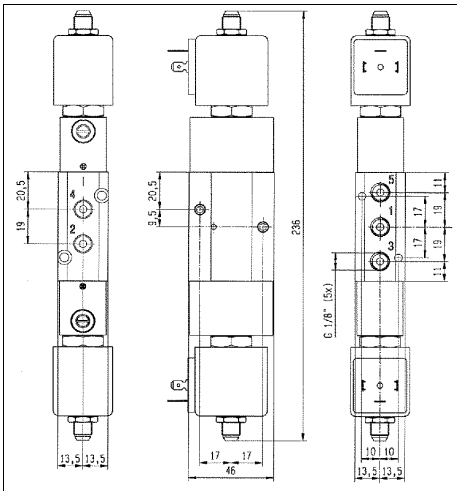



Dimension reference 206

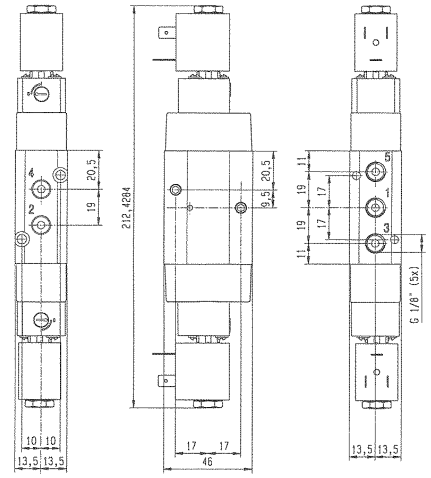



Dimension reference 207

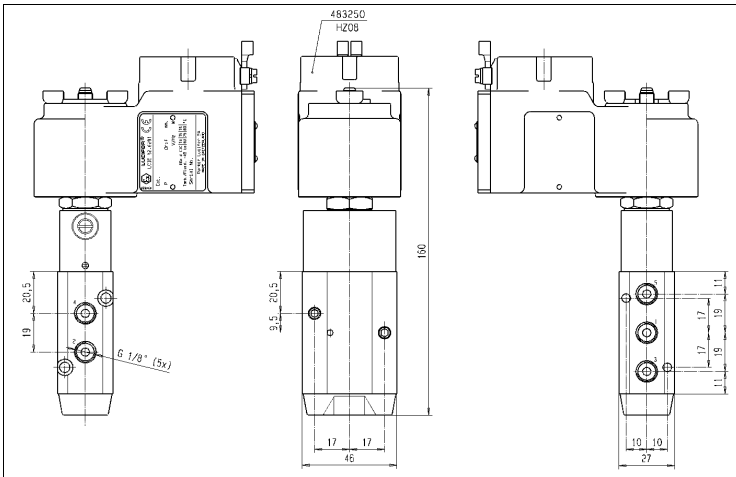

Dimension reference 7636

Parker Lucifer SA
Fluid Control Division Europe
CH-1227 Carouge-Genève

Solenoid valves for actuator control - 5/2 valves - Pipe connection-Spool design

Port size G	Orifice (mm)	Flow factors (L/min) Qn	Admissible differential pressure bar Min	Max DC	Max AC	Fluid temp. °C Min	Fluid temp. °C Max	Seat disc	Reference numbers: Global valve reference	Valve reference no.	Housing	OR Coil	Power consumption (W) DC	Power consumption (W) AC	Wt. (g)	El. Part Group *	Dim ref.
Pilot operated with external pressure supply																	
Anod. aluminium body/Pipe mounting - Spool design																	
1/8	4	600	2	10	10	-40	65	NBR	7441PAG1JPM0	**441P2108** [1]	**2995**	**481865**	9	8	360	2	204
	4	600	2	10	10	-40	65	NBR			**4270**	**481000**	8	8	470	2	
Impulse coil																	
Anod. aluminium body/NAMUR interface - Spool design																	
1/8	4	600	2	-	10	-25	80	NBR	7345PAG1JNM0	**345P21**	**-**	**484990**	-	11	330	4	202
	4	600	2	10	-	-25	80	NBR			**-**	**485400**	13	-	330	4	
Pilot operated - Integrated pilot																	
Anod. aluminium body/Pipe mounting - Spool design																	
1/4	8	1400	2	10	10	-25	80	NBR	2341PAG2HNM0	**341P02**	**8993**	**488980**	2.5	2	380	1	224

Table continued on page 244

Notes:

* See Electrical Parts Group table at end of section

1. Operates with low temperatures down to -40 deg. C

Solenoid valves for actuator control - 5/2 valves - Pipe connection-Spool design

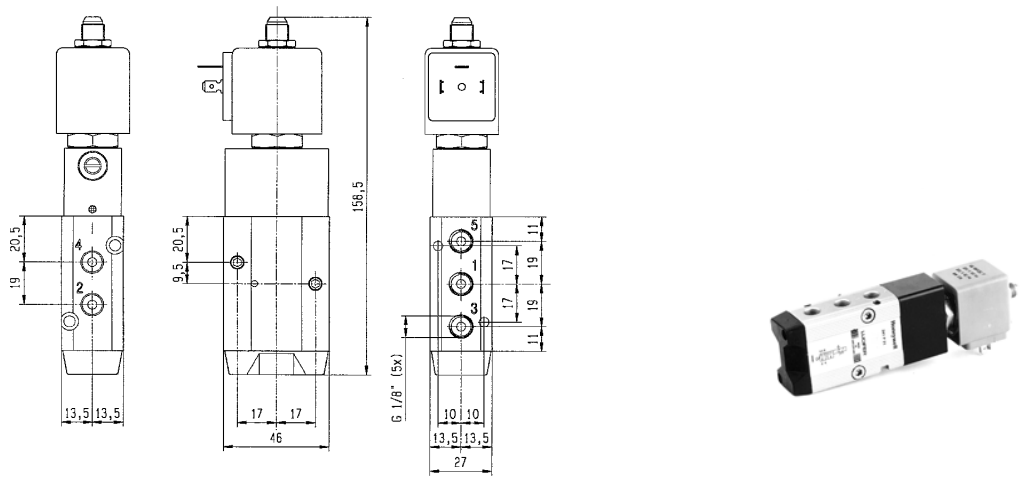

Dimension reference 202

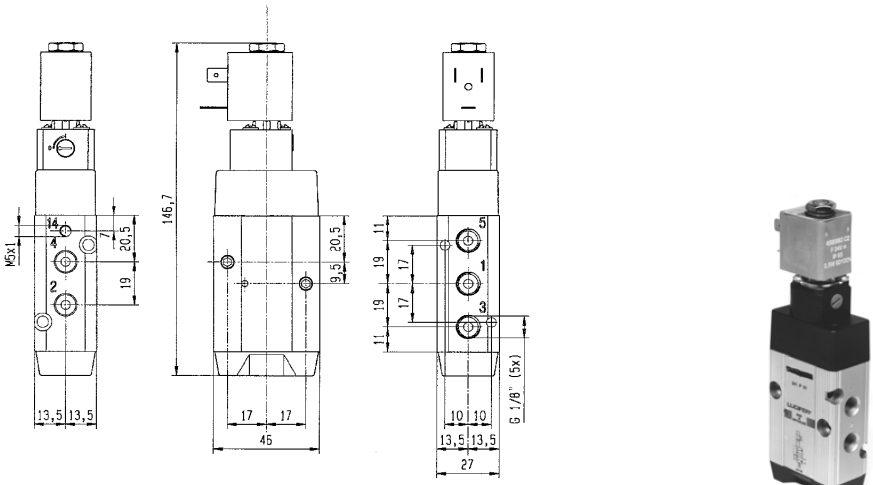

Dimension reference 204

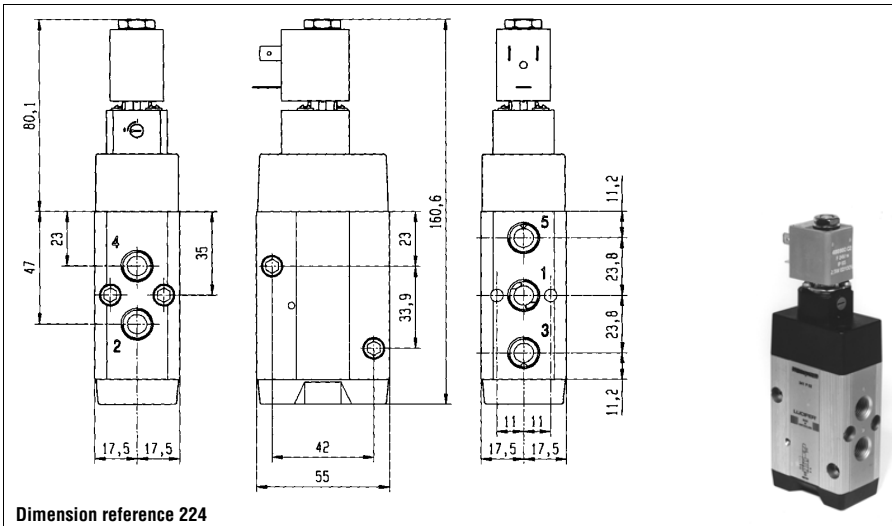

Dimension reference 224

Parker Lucifer SA
Fluid Control Division Europe
CH-1227 Carouge-Genève

Solenoid valves for actuator control - 5/2 valves - Pipe connection-Spool design

Port size G	Orifice (mm)	Flow factors (L/min) Qn	Admissible differential pressure bar Min	Max DC	Max AC	Fluid temp. °C Min	Fluid temp. °C Max	Seat disc	Reference numbers: Global valve reference	Valve reference no.	Housing	OR Coil	Power consumption (W) DC	Power consumption (W) AC	Wt. (g)	El. Part Group *	Dim ref.

External pressure supply

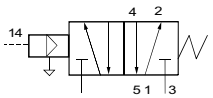

Anod. aluminium body/NAMUR interface - Spool design

1/8	4	600	2	10	10	-40	65	PUR	7541PAG1JP00	**541P0108** [1]	-	-	-	-	270	-	205

Pilot operated

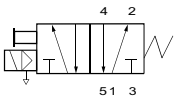

Anod. aluminium body/Pipe mounting - Spool design

1/4	8	1400	2	10	10	-25	80	NBR	7341PAG2PNM0	**341P22**	**2995**	**481865**	9	8	450	2	218
	8	1400	2	10	10	-25	80	NBR			**4270**	**481000**	8	8	560	2	
	8	1400	2	10	-	-25	80	NBR	7341PAG2PNL2	**341P2280**	**2995**	**482740**	1.6	-	450	6	218
	8	1400	2	10	-	-25	80	NBR			-	**491117**	2.5	-	810	6	

Pilot operated

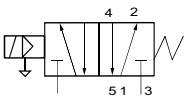

Anod. aluminium body/Pipe mounting - Spool design

1/4	8	1400	2	10	-	-25	80	NBR	7341PAG2PN90	**341P2290**	-	**483580.01** [2]	0.4	-	560	7	218

Table continued on page 246

Notes:

* See Electrical Parts Group table at end of section

1. Operates with low temperatures down to -40 deg. C
2. Other coil-housing available: 488650.01, 488660.01, 4888670.01 (refer to electrical parts at end of this section)

Parker Lucifer SA
Fluid Control Division Europe
CH-1227 Carouge-Genève

Tel: +45 63 12 83 00 | Email: ps@hymatik.com | www.hymatik.com | Hvidkaervej 27a, DK-5250 Odense SV, Denmark

Solenoid valves for actuator control - 5/2 valves - Pipe connection-Spool design

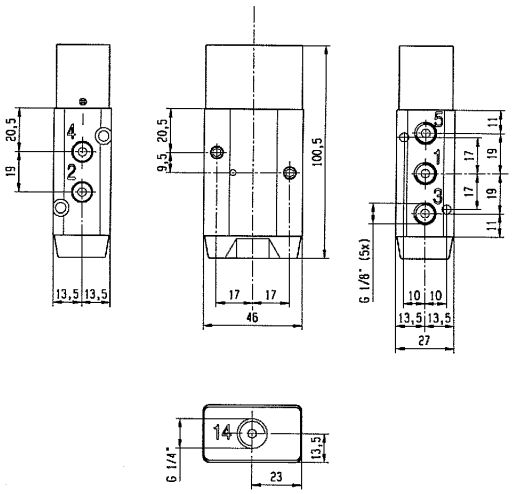

Dimension reference 205

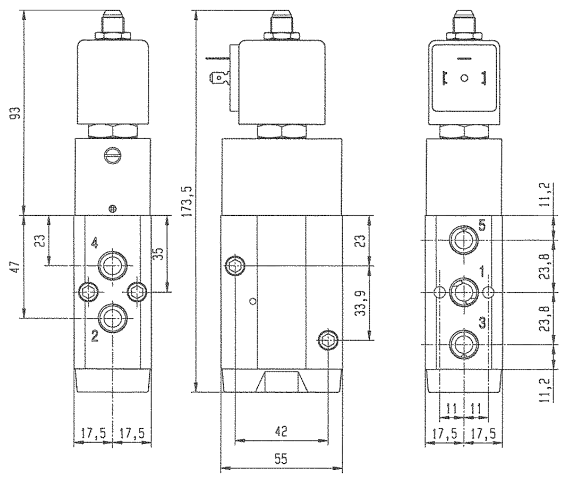

Dimension reference 218

Parker Lucifer SA
Fluid Control Division Europe
CH-1227 Carouge-Genève

Solenoid valves for actuator control - 5/2 valves - Pipe connection-Spool design

Port size G	Orifice (mm)	Flow factors (L/min) Qn	Admissible differential pressure bar Min	Max DC	Max AC	Fluid temp. °C Min	Fluid temp. °C Max	Seat disc	Reference numbers: Global valve reference	Valve reference no.	Housing	OR Coil	Power consumption (W) DC	Power consumption (W) AC	Wt. (g)	El. Part Group *	Dim ref.
Pilot operated 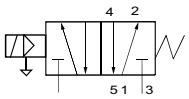																	
Anod. aluminium body/Pipe mounting - Spool design																	
1/4	8	1400	2	10	10	-25	80	NBR	7341PAG2PN1D	**341P22001D**	-	**483250**	8	8	1450	5	7755
Two solenoids and main pressure supply - Integrated pilot 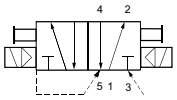																	
Anod. aluminium body/Pipe mounting - Spool design																	
1/4	8	1400	2	10	10	-25	80	NBR	2347PAG2PNM0	**347P02**	**8993**	**488980** 1	2.5	2	450	1	225
Two solenoids and main pressure supply 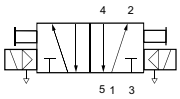																	
Anod. aluminium body/Pipe mounting - Spool design																	
1/4	8	1400	2	10	10	-25	80	NBR	7347PAG2PNM0	**347P22**	**2995**	**481865** 1	9	8	590	2	219
	8	1400	2	10	10	-25	80	NBR			**4270**	**481000** 1	8	8	810	2	

Notes:

* See Electrical Parts Group table at end of section

1. Please order two housings and coils for each valve

Parker Lucifer SA
Fluid Control Division Europe
CH-1227 Carouge-Genève

Tel: +45 63 12 83 00 | Email: ps@hymatik.com | www.hymatik.com | Hvidkaervej 27a, DK-5250 Odense SV, Denmark

Solenoid valves for actuator control - 5/2 valves - Pipe connection-Spool design

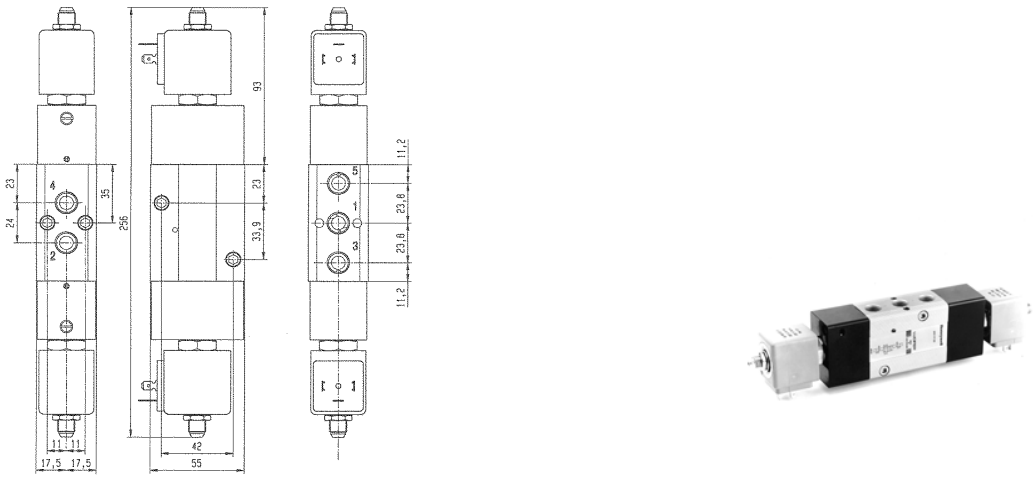

Dimension reference 219

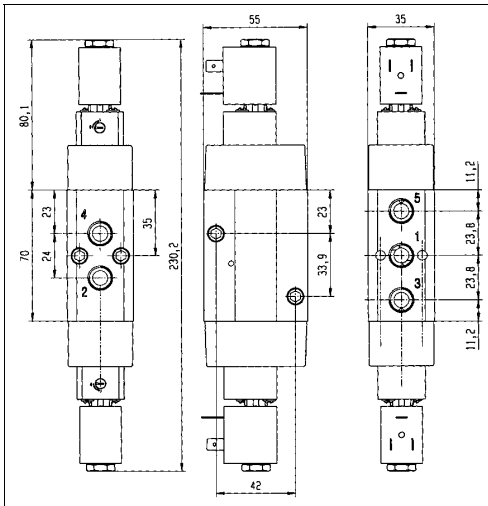

Dimension reference 225

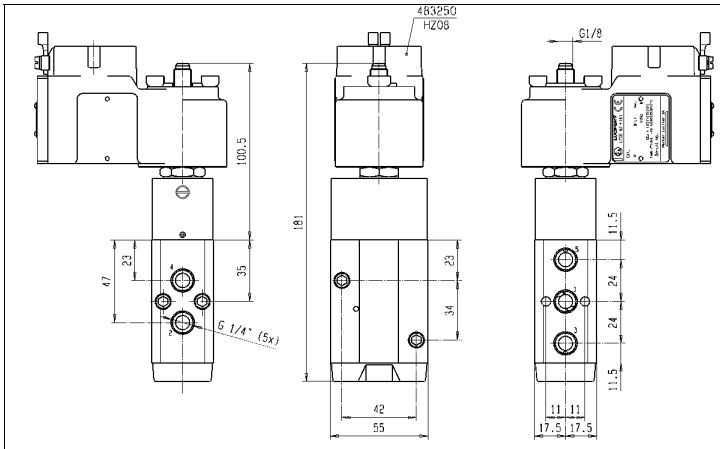

Dimension reference 7755

Parker Lucifer SA
Fluid Control Division Europe
CH-1227 Carouge-Genève

Solenoid valves for actuator control

5/2

Applications

3- or 4-way directional valves for control of single - or double acting pneumatic actuators.



Port size	Orifice (mm)	Flow factors (L/min)	Admissible differential pressure bar			Fluid temp. °C		Seat disc	Reference numbers			OR	Power consumption (W)		Wt. (g)	El. Part Group *	Dim ref.
			Min	Max													
G		Qn		DC	AC	Min	Max		Global valve reference	Valve reference no.	Housing	Coil	DC	AC			

Pilot operated

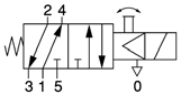

Aluminium alloy and brass body/Pipe mounting - Poppet design

1/8	4	400	1	10	10	-10	75	NBR	-	**341L9101**	**8993**	**488980**	2.5	2	270	1	42

Table continued on page 250

Notes:

* See Electrical Parts Group table at end of section

Parker Lucifer SA
Fluid Control Division Europe
CH-1227 Carouge-Genève

Tel: +45 63 12 83 00 | Email: ps@hymatik.com | www.hymatik.com | Hvidkaervej 27a, DK-5250 Odense SV, Denmark

Solenoid valves for actuator control - 5/2 valves - Pipe connection-Poppet design

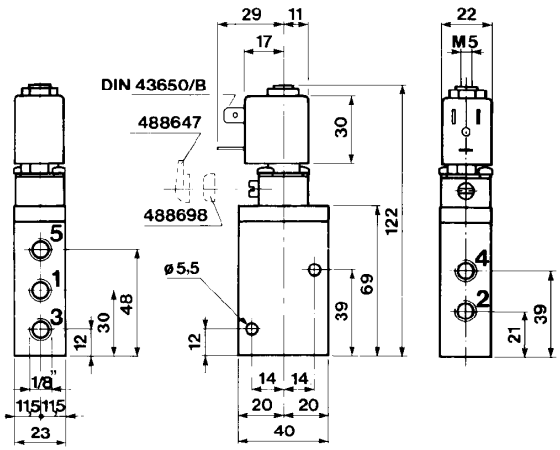



Dimension reference 42

Parker Lucifer SA
Fluid Control Division Europe
CH-1227 Carouge-Genève

Solenoid valves for actuator control - 5/2 valves - Pipe connection-Poppet design

Port size G	Orifice (mm)	Flow factors (L/min) Qn	Admissible differential pressure bar Min	Max DC	Max AC	Fluid temp. °C Min	Fluid temp. °C Max	Seat disc	Reference numbers: Global valve reference	Valve reference no.	Housing	OR Coil	Power consumption (W) DC	Power consumption (W) AC	Wt. (g)	El. Part Group *	Dim ref.
Pilot operated																	
1/4	8	1400	1	10	10	-10	75	NBR	-	**341L11**	**8993**	**488980**	2.5	2	690	1	118

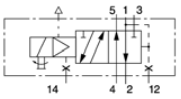

Die-cast zinc body/Pipe mounting - Poppet design

Table continued on page 252

Notes:

* See Electrical Parts Group table at end of section

Parker Lucifer SA
Fluid Control Division Europe
CH-1227 Carouge-Genève

Tel: +45 63 12 83 00 | Email: ps@hymatik.com | www.hymatik.com | Hvidkaervej 27a, DK-5250 Odense SV, Denmark

Solenoid valves for actuator control - 5/2 valves - Pipe connection-Poppet design

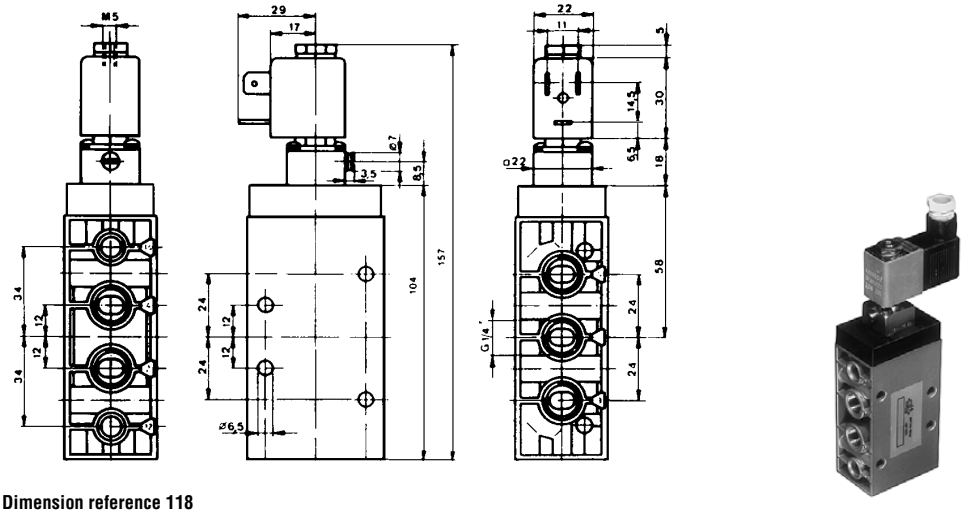

Dimension reference 118

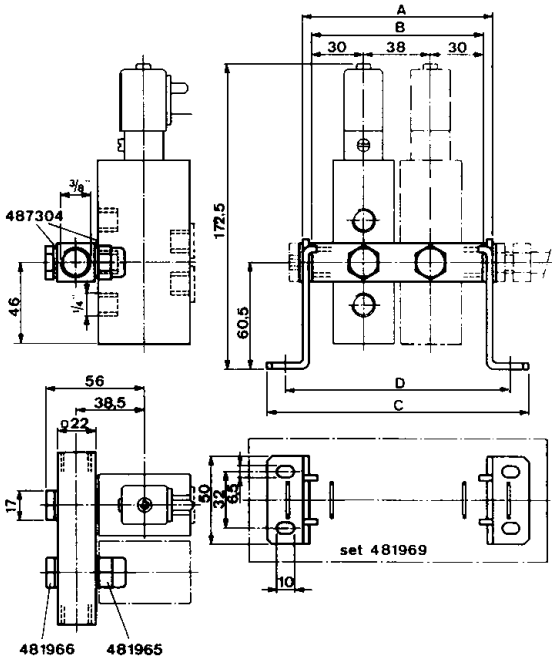

Quantity of valves by assembly	Feeder Ref.	A mm	B mm	C mm	D mm	Sealing 487304	Screw 481966	Set No. 481969
2	481964.02	108	98	149	128	4	2	1
3	481964.03	146	136	187	166	6	3	1
4	481964.04	184	174	225	204	8	4	1
5	481964.05	222	212	263	242	10	5	1
6	481964.06	260	250	301	280	12	6	1
7	481964.07	298	288	339	318	14	7	1
8	481964.08	336	326	377	356	16	8	1
9	481964.09	374	364	415	394	18	9	1
10	481964.10	412	402	453	432	20	10	1

Associated sub-base diagram

Parker Lucifer SA
Fluid Control Division Europe
CH-1227 Carouge-Genève

Solenoid valves for actuator control - 5/2 valves - Pipe connection-Poppet design

Port size G	Orifice (mm)	Flow factors (L/min) Qn	Admissible differential pressure bar Min	Max DC	Max AC	Fluid temp. °C Min	Fluid temp. °C Max	Seat disc	Reference numbers: Global valve reference	Valve reference no.	Housing	OR Coil	Power consumption (W) DC	Power consumption (W) AC	Wt. (g)	El. Part Group *	Dim ref.
Two solenoids and main pressure supply																	
1/4	8	1400	1	10	10	-10	75	NBR	-	**347L11**	**8993**	**488980** [1]	2.5	2	750	1	46

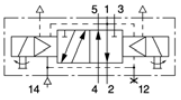

Die-cast zinc body/Pipe mounting - Poppet design

Table continued on page 254

Notes:

* See Electrical Parts Group table at end of section

1. Please order two housings and coils for each valve

Parker Lucifer SA
Fluid Control Division Europe
CH-1227 Carouge-Genève

Solenoid valves for actuator control - 5/2 valves - Pipe connection-Poppet design

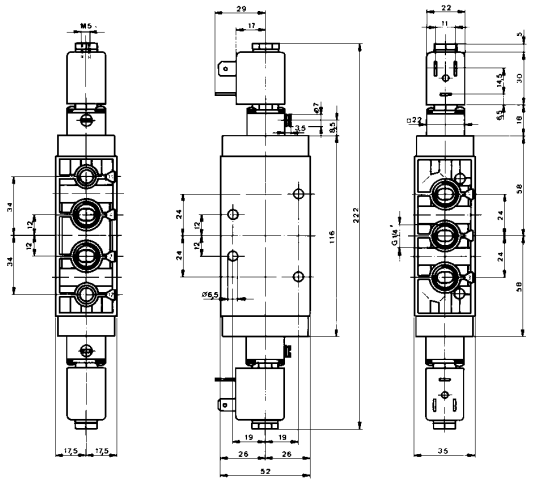

Dimension reference 46

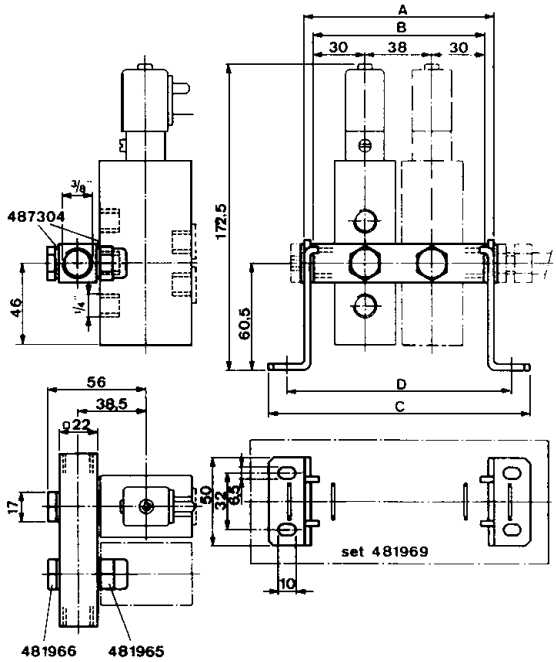

Quantity of valves by assembly	Feeder Ref.	A mm	B mm	C mm	D mm	Sealing 487304	Screw 481966	Set No. 481969
2	481964.02	108	98	149	128	4	2	1
3	481964.03	146	136	187	166	6	3	1
4	481964.04	184	174	225	204	8	4	1
5	481964.05	222	212	263	242	10	5	1
6	481964.06	260	250	301	280	12	6	1
7	481964.07	298	288	339	318	14	7	1
8	481964.08	336	326	377	356	16	8	1
9	481964.09	374	364	415	394	18	9	1
10	481964.10	412	402	453	432	20	10	1

Associated sub-base diagram

Parker Lucifer SA
Fluid Control Division Europe
CH-1227 Carouge-Genève

Solenoid valves for actuator control - 5/2 valves - Pipe connection-Poppet design

Port size G	Orifice (mm)	Flow factors (L/min) Qn	Admissible differential pressure bar Min	Max DC	Max AC	Fluid temp. °C Min	Fluid temp. °C Max	Seat disc	Reference numbers: Global valve reference	Valve reference no.	Housing	OR Coil	Power consumption (W) DC	Power consumption (W) AC	Wt. (g)	El. Part Group *	Dim ref.
Two solenoids and main pressure supply																	
1/8	4	315	2	10	10	-10	75	NBR	-	**347L9101**	**8993**	**488980** [1]	2.5	2	430	1	117
Pilot operated																	
1/4	8	1400	1	10	10	-10	75	NBR	7341LMG2NNM0	**E341L1130**	**2995**	**481865**	9	8	-	2	3539
	8	1400	1	10	10	-10	75	NBR	7341LMG2NNM0		**4270**	**481000**	8	8	-	2	3539
	8	1400	1	10	10	-10	75	NBR	-	**341L1190**	**-**	**483580.01** [2]	0.4	-	690	7	7478

Aluminium alloy and brass body/Pipe mounting - Poppet design

Die-cast zinc body/Pipe mounting - Poppet design

Notes:

* See Electrical Parts Group table at end of section

1. Please order two of these items per valve
2. Other coil-housing available: 488650.01, 488660.01, 4888670.01 (refer to electrical parts at end of this section)

Parker Lucifer SA
Fluid Control Division Europe
CH-1227 Carouge-Genève

Tel: +45 63 12 83 00 | Email: ps@hymatik.com | www.hymatik.com | Hvidkaervej 27a, DK-5250 Odense SV, Denmark

Solenoid valves for actuator control - 5/2 valves - Pipe connection-Poppet design

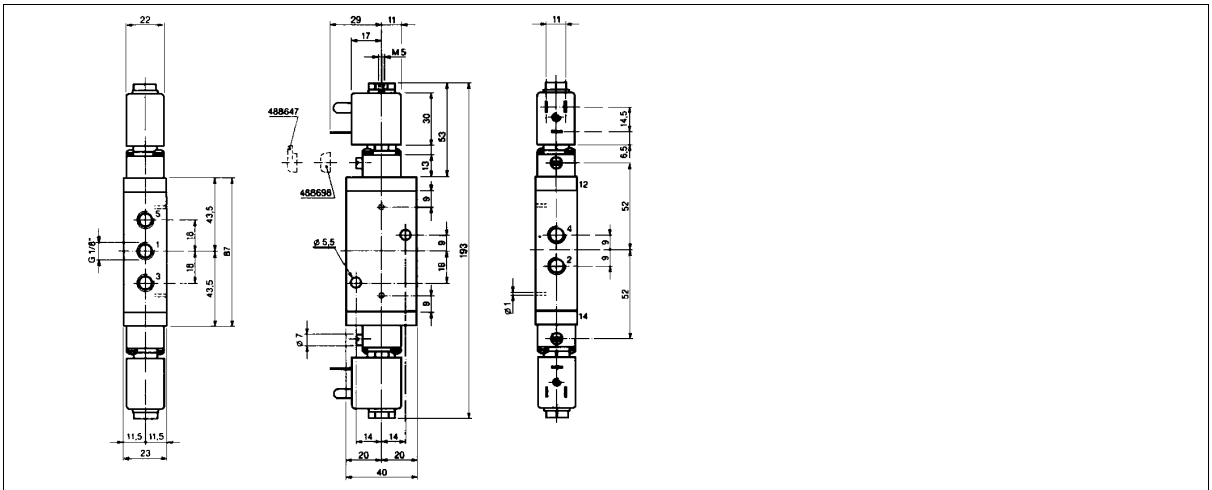

Dimension reference 117

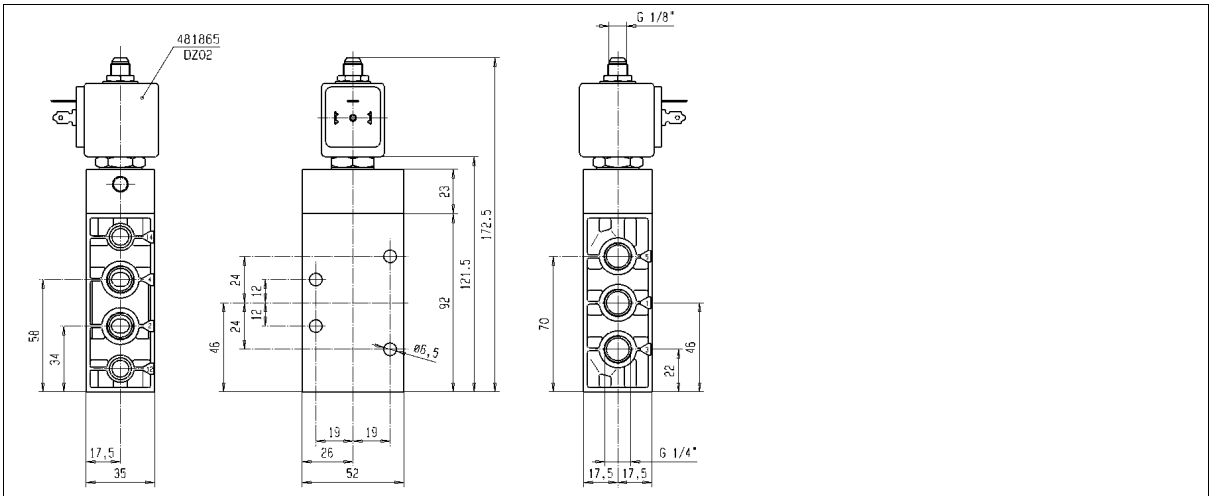

Dimension reference 3539

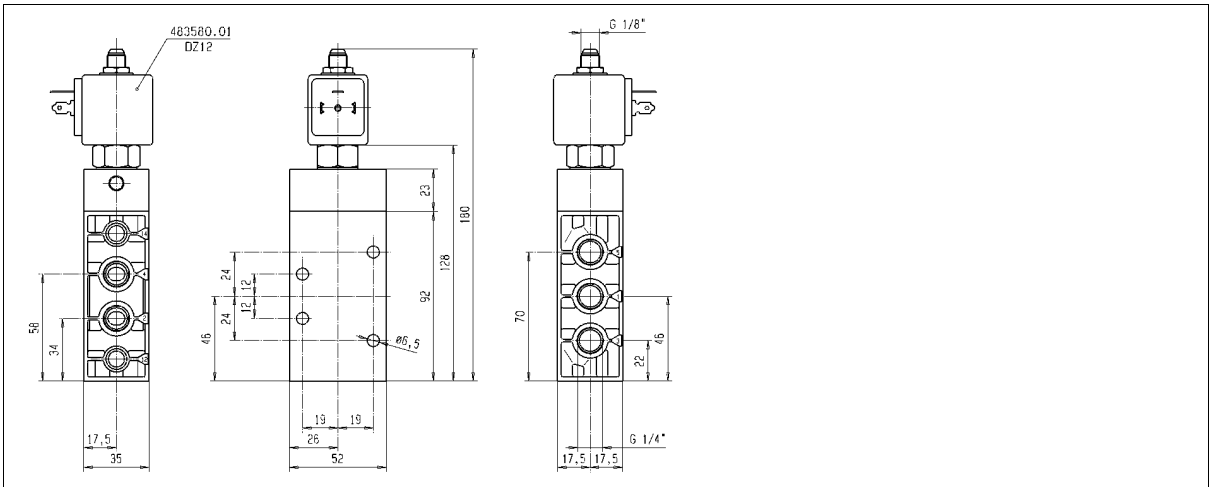

Dimension reference 7478

Parker Lucifer SA
Fluid Control Division Europe
CH-1227 Carouge-Genève

Parker Lucifer SA
Fluid Control Division Europe
CH-1227 Carouge-Genève

Solenoid valves for actuator control – NAMUR interface

ACTUATION	CONNECTION	ORIFICE (MM)	MAX. PRESSURE (BAR) <KPA>	PAGE
Pilot operated	1/4	8	10.0	264/266
	1/4 - 1/8	4	10.0	258/260/270
Pilot operated - Integrated pilot	1/4	8	10.0	264
	1/4 - 1/8	4	10.0	258
Two solenoids and main pressure supply	1/4	8	10.0	268
	1/4 - 1/8	4	10.0	262
Two solenoids and main pressure supply - Integrated pilot	1/4	8	10.0	268
	1/4 - 1/8	4	10.0	262
Solenoid and external pressure supply	1/4 - 1/8	4	10.0	260
External pressure supply	1/4 - 1/8	4	10.0	262

Notes:

Parker Lucifer SA
Fluid Control Division Europe
CH-1227 Carouge-Genève

Tel: +45 63 12 83 00 | Email: ps@hymatik.com | www.hymatik.com | Hvidkaervej 27a, DK-5250 Odense SV, Denmark

Solenoid valves for actuator control

3/2
5/2

Applications

3- or 4-way directional valves for control of single - or double acting pneumatic actuators.

A patented sealing plate is incorporated to the body - providing on-site conversion of the valve from 5/2 to the 3/2 function (or vice versa) by simply rotating the plate through 180°. In the 3/2 function it provides venting of spring chambers to prevent corrosion which normally occurs when environmental air penetrates into the actuator.

The interface design corresponds to the German NAMUR standard and the VDI/VDE 3845 recommendations of the actuator industry and permits a compact design of the actuator/valve unit.



Port size	Orifice (mm)	Flow factors (L/min)	Admissible differential pressure bar			Fluid temp. °C		Seat disc	Reference numbers				OR	Power consumption (W)		Wt. (g)	El. Part Group *	Dim ref.
			Min	Max		Min	Max		Global valve reference	Valve reference no.	Housing	Coil		DC	AC			
G		Qn		DC	AC													

Pilot operated - Integrated pilot

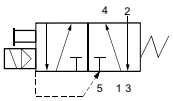

Anod. aluminium body/NAMUR interface - Spool design

1/4 - 1/8	4	600	2	10	10	-25	80	NBR	2341NAKBJNM1	**341N01** [1]	**8993**	**488980**	2.5	2	320	1	209
	4	600	2	10	10	-25	80	NBR	2341NAKBJNM0	**341N11**	**8993**	**488980**	2.5	2	320	1	208

Pilot operated

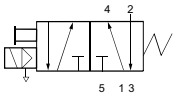

Anod. aluminium body/NAMUR interface - Spool design

1/4 - 1/8	4	600	2	10	10	-25	80	NBR	7341NAKBJNM1	**341N21**	**2995**	**481865**	9	8	390	2	210
	4	600	2	10	10	-25	80	NBR			**4270**	**481000**	8	8	500	2	

Table continued on page 260

Notes:

* See Electrical Parts Group table at end of section

1. Manual override standard

Parker Lucifer SA
Fluid Control Division Europe
CH-1227 Carouge-Genève

Tel: +45 63 12 83 00 | Email: ps@hymatik.com | www.hymatik.com | Hvidkaervej 27a, DK-5250 Odense SV, Denmark

Solenoid valves for actuator control - 3/2 or 5/2 valves - NAMUR interface-Spool design

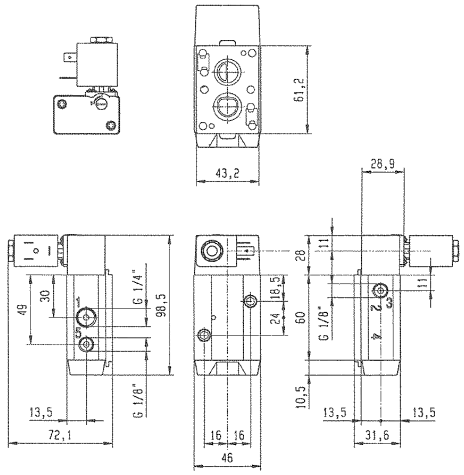



Dimension reference 208

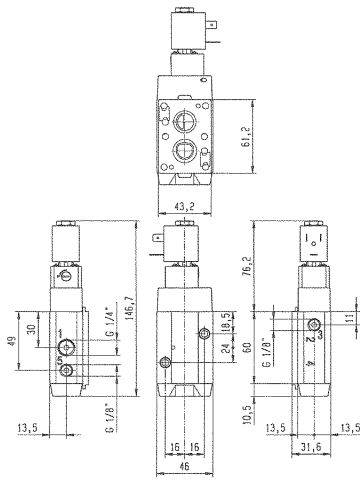

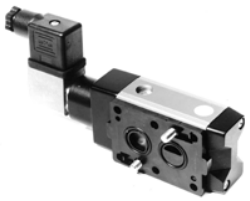

Dimension reference 209

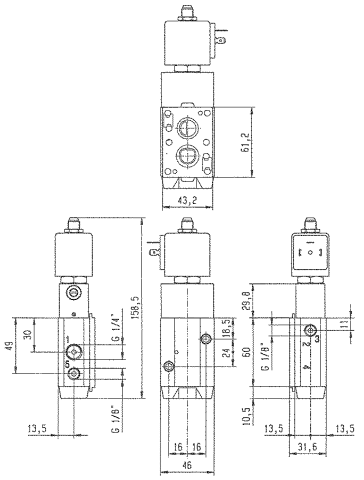

Dimension reference 210

Parker Lucifer SA
Fluid Control Division Europe
CH-1227 Carouge-Genève

Solenoid valves for actuator control - 3/2 or 5/2 valves - NAMUR interface-Spool design

Port size G	Orifice (mm)	Flow factors (L/min) Qn	Admissible differential pressure bar Min	Max DC	Max AC	Fluid temp. °C Min	Fluid temp. °C Max	Seat disc	Reference numbers: Global valve reference	Valve reference no.	Housing	OR Coil	Power consumption (W) DC	Power consumption (W) AC	Wt. (g)	El. Part Group *	Dim ref.
Pilot operated																	
Anod. aluminium body/NAMUR interface - Spool design																	
1/4 - 1/8	4	600	2	10	10	-25	80	NBR	7341NAKBJNM0	**341N31**	**2995**	**481865**	9	8	510	2	211
	4	600	2	10	10	-25	80	NBR			**4270**	**481000**	8	8	620	2	
	4	600	2	10	10	-40	65	NBR	7341NAKBJPM0	**341N3108** 1	**2995**	**481865**	9	8	510	2	211
	4	600	2	10	10	-40	65	NBR			**4270**	**481000**	8	8	620	2	
	4	600	2	10	-	-25	80	NBR	7341NAKBJNL2	**341N3180**	**2995**	**482740**	1.6	-	510	6	211
Pilot operated																	
Anod. aluminium body/NAMUR interface - Spool design																	
1/4 - 1/8	4	400	2	10	10	-25	80	NBR	7341NAKBHN90	**341N3190**	-	**483580.01** 2	0.4	-	640	7	211
Pilot operated																	
Anod. aluminium body/NAMUR interface - Spool design																	
1/4 - 1/8	4	600	2	10	10	-25	80	NBR	7341NAKBJN1D	**341N31001D**	-	**483250**	8	8	1520	5	7753
	4	600	2	10	10	-40	65	NBR	7341NAKBJP1D	**341N31081D**	-	**483250**	8	8	1520	5	7753
Solenoid and external pressure supply																	
Anod. aluminium body/NAMUR interface - Spool design																	
1/4 - 1/8	4	600	2	10	10	-40	65	NBR	7441NAKBJPM0	**441N3108** 1	**2995**	**481865**	9	8	510	2	211
	4	600	2	10	10	-40	65	NBR			**4270**	**481000**	8	8	620	2	

Table continued on page 262

Notes:

* See Electrical Parts Group table at end of section

1. Operates with low temperatures down to -40 deg. C
2. Other coil-housing available: 488650.01, 488660.01, 4888670.01 (refer to electrical parts at end of this section)

Parker Lucifer SA
Fluid Control Division Europe
CH-1227 Carouge-Genève

Tel: +45 63 12 83 00 | Email: ps@hymatik.com | www.hymatik.com | Hvidkaervej 27a, DK-5250 Odense SV, Denmark

Solenoid valves for actuator control - 3/2 or 5/2 valves - NAMUR interface-Spool design

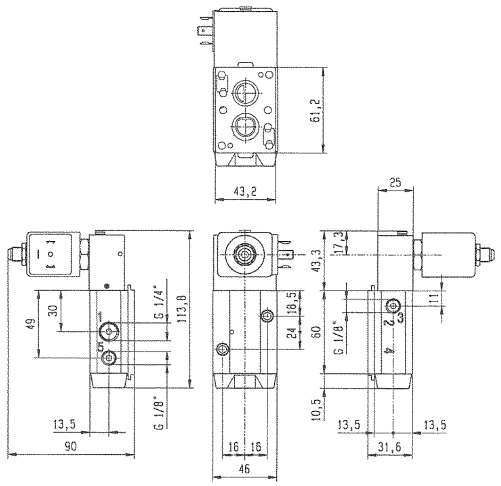



Dimension reference 211

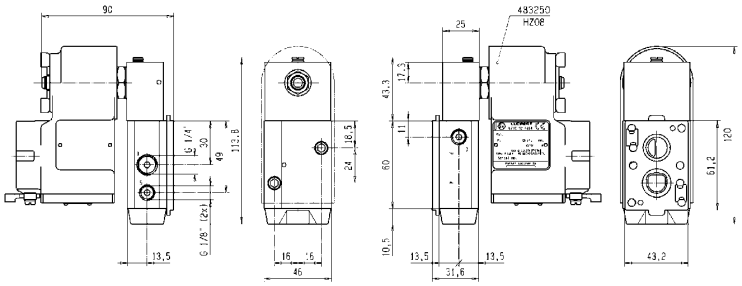

Dimension reference 7753

Parker Lucifer SA
Fluid Control Division Europe
CH-1227 Carouge-Genève

Solenoid valves for actuator control - 3/2 or 5/2 valves - NAMUR interface-Spool design

Port size G	Orifice (mm)	Flow factors (L/min) Qn	Admissible differential pressure bar Min	Max DC	Max AC	Fluid temp. °C Min	Fluid temp. °C Max	Seat disc	Reference numbers: Global valve reference	Valve reference no.	Housing	OR Coil	Power consumption (W) DC	Power consumption (W) AC	Wt. (g)	El. Part Group *	Dim ref.
Two solenoids and main pressure supply - Integrated pilot																	
1/4 - 1/8	4	400	2	10	10	-25	80	NBR	2347NAKBHNM0	**347N11**	**8993**	**488980** 1	2.5	2	530	1	213
Two solenoids and main pressure supply																	
1/4 - 1/8	4	400	2	10	10	-25	80	NBR	7347NAKBHNM0	**347N31**	**2995**	**481865** 1	9	8	670	2	216
	4	400	2	10	10	-25	80	NBR			**4270**	**481000** 1	8	8	890	2	
External pressure supply																	
1/4 - 1/8	4	600	2	10	10	-25	80	FKM	7541NAKBJN00	**541N01**	-	-	-	-	300	-	214
	4	600	2	10	10	-40	65	NBR	7541NAKBJN00	**541N0108** 2	-	-	-	-	300	-	214

Anod. aluminium body/NAMUR interface - Spool design

Anod. aluminium body/NAMUR interface - Spool design

Anod. aluminium body/NAMUR interface - Spool design

Table continued on page 264

Notes:

* See Electrical Parts Group table at end of section

1. Please order two housings and coils for each valve
2. Operates with low temperatures down to -40 deg. C

Parker Lucifer SA
Fluid Control Division Europe
CH-1227 Carouge-Genève

Tel: +45 63 12 83 00 | Email: ps@hymatik.com | www.hymatik.com | Hvidkaervej 27a, DK-5250 Odense SV, Denmark

Solenoid valves for actuator control - 3/2 or 5/2 valves - NAMUR interface-Spool design

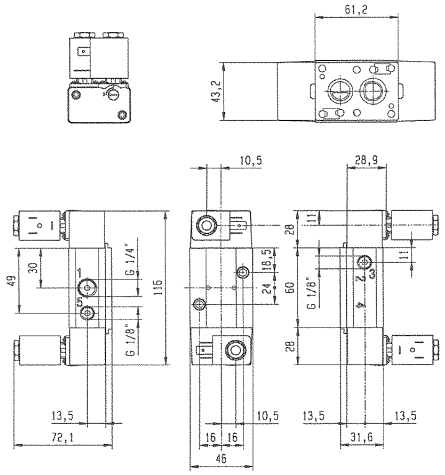

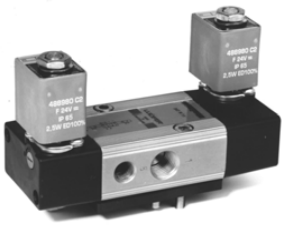

Dimension reference 213

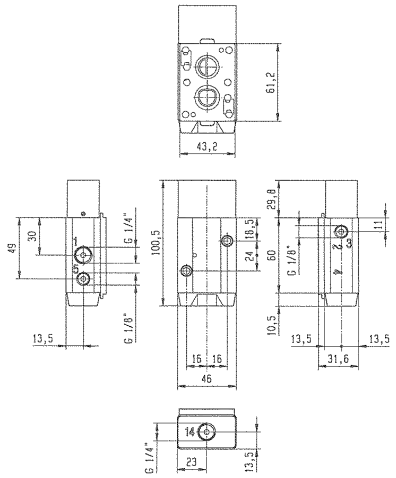



Dimension reference 214

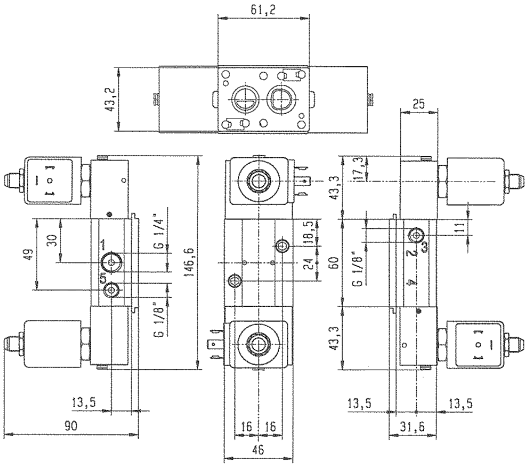



Dimension reference 216

Parker Lucifer SA
Fluid Control Division Europe
CH-1227 Carouge-Genève

Solenoid valves for actuator control - 3/2 or 5/2 valves - NAMUR interface-Spool design

Port size G	Orifice (mm)	Flow factors (L/min) Qn	Admissible differential pressure bar Min	Max DC	Max AC	Fluid temp. °C Min	Fluid temp. °C Max	Seat disc	Reference numbers: Global valve reference	Valve reference no.	OR: Housing	OR: Coil	Power consumption (W) DC	Power consumption (W) AC	Wt. (g)	El. Part Group *	Dim ref.
Pilot operated - Integrated pilot																	
1/4	8	1400	2	10	10	-25	80	NBR	2341NAKBPNM1	**341N02**	**8993**	**488980**	2.5	2	470	1	220
	8	1400	2	10	10	-25	80	NBR	2341NAKBNNM0	**341N12**	**8993**	**488980**	2.5	2	470	1	221
Pilot operated																	
1/4	8	1400	2	10	10	-25	80	NBR	7341NAKBPNM1	**341N22**	**2995**	**481865**	9	8	690	2	222
	8	1400	2	10	10	-25	80	NBR			**4270**	**481000**	8	8	800	2	

Anod. aluminium body/NAMUR interface - Spool design

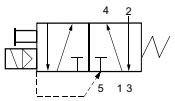

Anod. aluminium body/NAMUR interface - Spool design

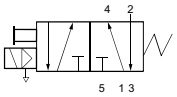

Table continued on page 266

Notes:

* See Electrical Parts Group table at end of section

Parker Lucifer SA
Fluid Control Division Europe
CH-1227 Carouge-Genève

Tel: +45 63 12 83 00 | Email: ps@hymatik.com | www.hymatik.com | Hvidkaervej 27a, DK-5250 Odense SV, Denmark

Solenoid valves for actuator control - 3/2 or 5/2 valves - NAMUR interface-Spool design

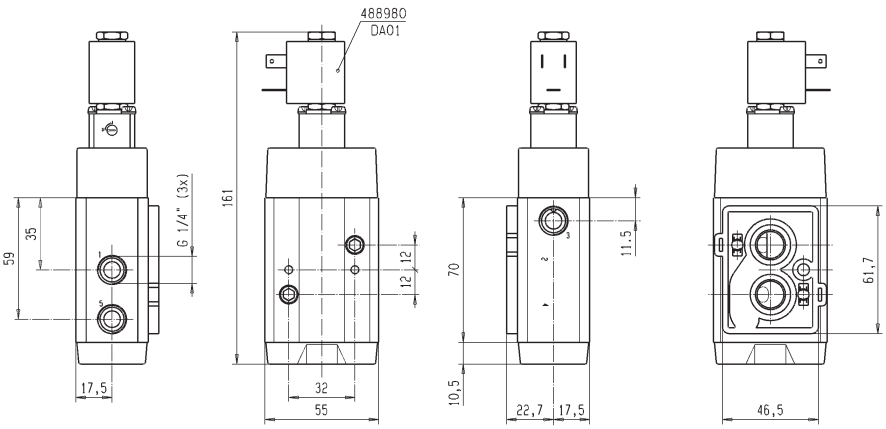

Dimension reference 220

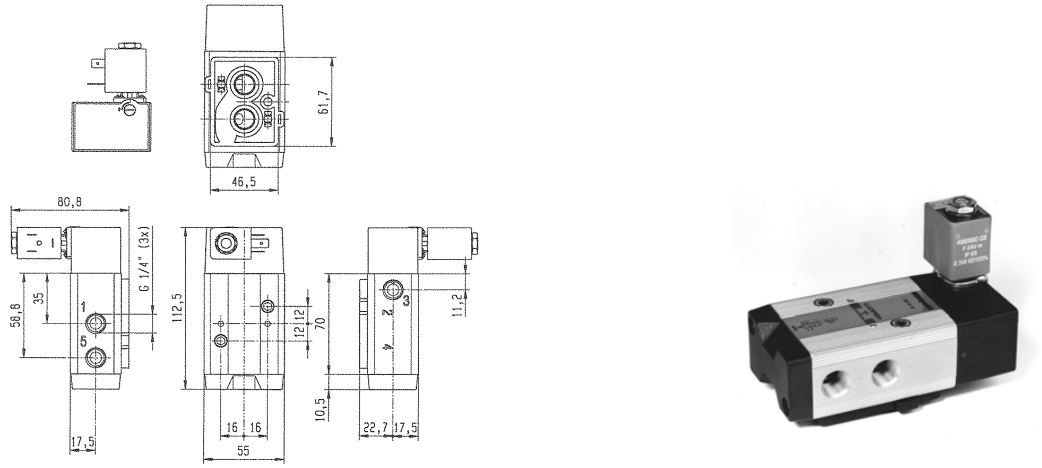

Dimension reference 221

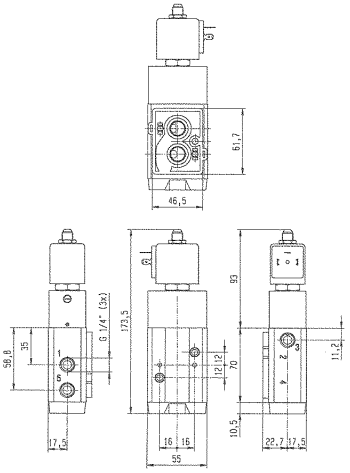

Dimension reference 222

Parker Lucifer SA
Fluid Control Division Europe
CH-1227 Carouge-Genève

Solenoid valves for actuator control - 3/2 or 5/2 valves - NAMUR interface-Spool design

Port size G	Orifice (mm)	Flow factors (L/min) Qn	Admissible differential pressure bar Min	Max DC	Max AC	Fluid temp. °C Min	Fluid temp. °C Max	Seat disc	Reference numbers: Global valve reference	Valve reference no.	Housing	OR Coil	Power consumption (W) DC	Power consumption (W) AC	Wt. (g)	El. Part Group *	Dim ref.
Pilot operated																	
Anod. aluminium body/NAMUR interface - Spool design																	
1/4	8	1400	2	10	10	-25	80	NBR	7341NAKBPNM0	**341N32**	**2995**	**481865**	9	8	740	2	223
	8	1400	2	10	10	-25	80	NBR			**4270**	**481000**	8	8	850	2	
	8	1400	2	10	-	-25	80	FKM	7341NAKBPNL2	**341N3280**	**2995**	**482740**	1.6	-	740	6	223
	8	1400	2	10	-	-25	80	FKM			-	**491117**	2.5	-	740	6	
Pilot operated																	
Anod. aluminium body/NAMUR interface - Spool design																	
1/4	8	1400	2	10	-	-25	80	NBR	7341NAKBPN90	**341N3290**	-	**483580.01** [1]	0.4	-	850	7	223
	8	1400	2	10	10	-25	80	NBR	7341NAKBPN1D	**341N32001D**	-	**483250**	8	8	1730	5	7754

Table continued on page 268

Notes:

* See Electrical Parts Group table at end of section

1. Other coil-housing available: 488650.01, 488660.01, 4888670.01 (refer to electrical parts at end of this section)

Parker Lucifer SA
Fluid Control Division Europe
CH-1227 Carouge-Genève

Solenoid valves for actuator control - 3/2 or 5/2 valves - NAMUR interface-Spool design

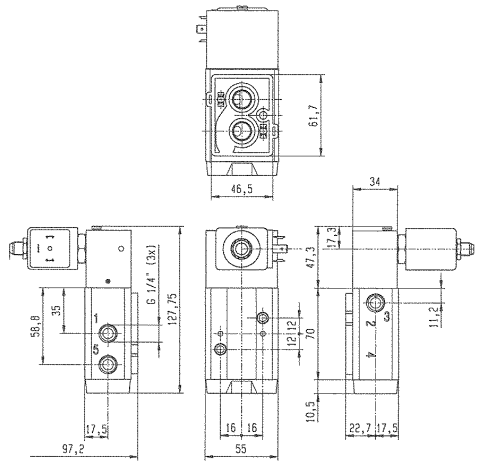



Dimension reference 223

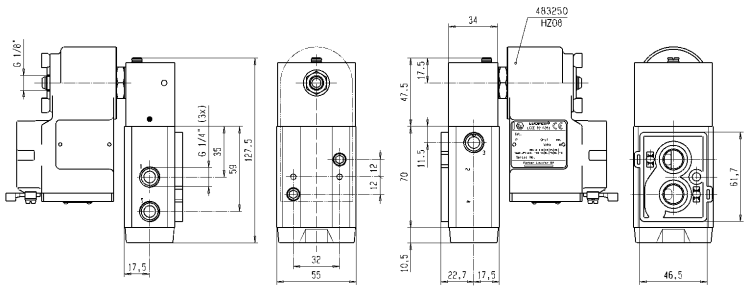

Dimension reference 7754

Parker Lucifer SA
Fluid Control Division Europe
CH-1227 Carouge-Genève

Solenoid valves for actuator control - 3/2 or 5/2 valves - NAMUR interface-Spool design

Port size G	Orifice (mm)	Flow factors (L/min) Qn	Admissible differential pressure bar Min	Max DC	Max AC	Fluid temp. °C Min	Fluid temp. °C Max	Seat disc	Reference numbers Global valve reference	Valve reference no.	Housing	OR Coil	Power consumption (W) DC	Power consumption (W) AC	Wt. (g)	El. Part Group *	Dim ref.
Two solenoids and main pressure supply - Integrated pilot 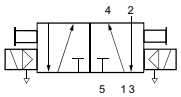																	
Anod. aluminium body/NAMUR interface - Spool design																	
1/4	8	1400	2	10	10	-25	80	NBR	2347NAKBPNM0	**347N12**	**8993**	**488980** [1]	2.5	2	640	1	7315
Two solenoids and main pressure supply 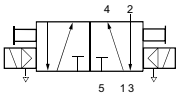																	
Anod. aluminium body/NAMUR interface - Spool design																	
1/4	8	1400	2	10	10	-25	80	NBR	7347NAKBPNM0	**347N32**	**2995**	**481865** [1]	9	8	770	2	7320
	8	1400	2	10	10	-25	80	NBR			**4270**	**481000** [1]	8	8	980	2	

Notes:

* See Electrical Parts Group table at end of section

1. Please order two housings and coils for each valve

Parker Lucifer SA
Fluid Control Division Europe
CH-1227 Carouge-Genève

Tel: +45 63 12 83 00 | Email: ps@hymatik.com | www.hymatik.com | Hvidkaervej 27a, DK-5250 Odense SV, Denmark

Solenoid valves for actuator control - 3/2 or 5/2 valves - NAMUR interface-Spool design

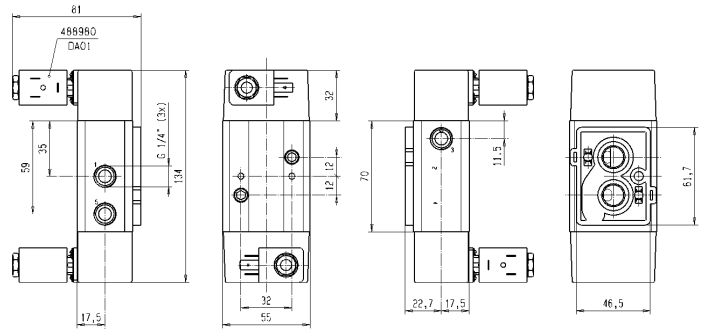

Dimension reference 7315

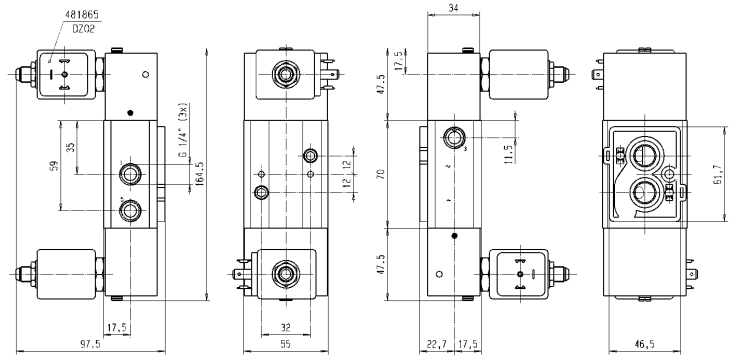

Dimension reference 7320

Parker Lucifer SA
Fluid Control Division Europe
CH-1227 Carouge-Genève

Solenoid valves for actuator control

3/2
5/2

Port size	Orifice (mm)	Flow factors (L/min)	Admissible differential pressure bar			Fluid temp. °C		Seat disc	Reference numbers					Power consumption (W)		Wt. (g)	El. Part Group *	Dim ref.
			Min	Max		Min	Max		Global valve reference	Valve reference no.		OR Coil		DC	AC			
G		Qn		DC	AC						Housing							

Pilot operated

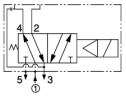

Anod. aluminium body/NAMUR interface - Poppet design

1/4 - 1/8	4	355	1	10	10	-10	75	NBR	-	**341L9504**	**8993**	**488980**	2.5	2	360	1	44
	4	355	1	10	10	-10	75	NBR	7341LAKBGN1D	**341L95341D**	-	**483250**	8	8	1470	5	45
	4	355	1	10	10	-10	75	NBR	7341LAKBGNM0	**341L9534**	**2995**	**481865**	9	8	470	2	45
	4	355	1	10	-	-10	75	NBR	7341LAKBGNL2	**341L9584**	-	**482740**	1.6	-	470	6	45
	4	355	1	10	-	-10	75	NBR	7341LAKBGN90	**341L9594**	-	**483580.01** [1]	0.4	-	470	7	45
	4	355	2	10	-	-25	65	PUR	7341LAPBGPL2	**341L9588**	-	**482740**	1.6	-	470	6	45
	4	355	2	10	-	-25	75	PUR	-	**341L9598**	-	**483580.01** [1]	0.4	-	470	7	45

Notes:

* See Electrical Parts Group table at end of section

1. Other coil-housing available: 488650.01, 488660.01, 4888670.01 (refer to electrical parts at end of this section)

Parker Lucifer SA
Fluid Control Division Europe
CH-1227 Carouge-Genève

Tel: +45 63 12 83 00 | Email: ps@hymatik.com | www.hymatik.com | Hvidkaervej 27a, DK-5250 Odense SV, Denmark

Solenoid valves for actuator control - 3/2 or 5/2 valves - NAMUR interface-Poppet design

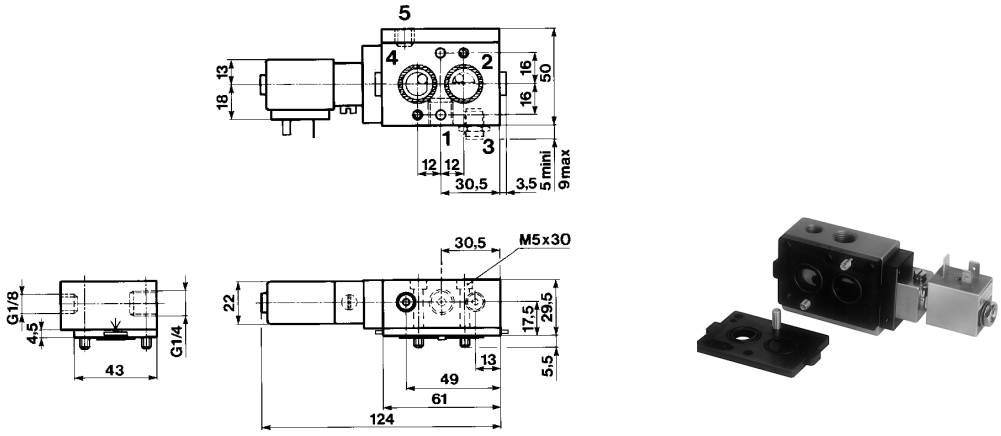

Dimension reference 44

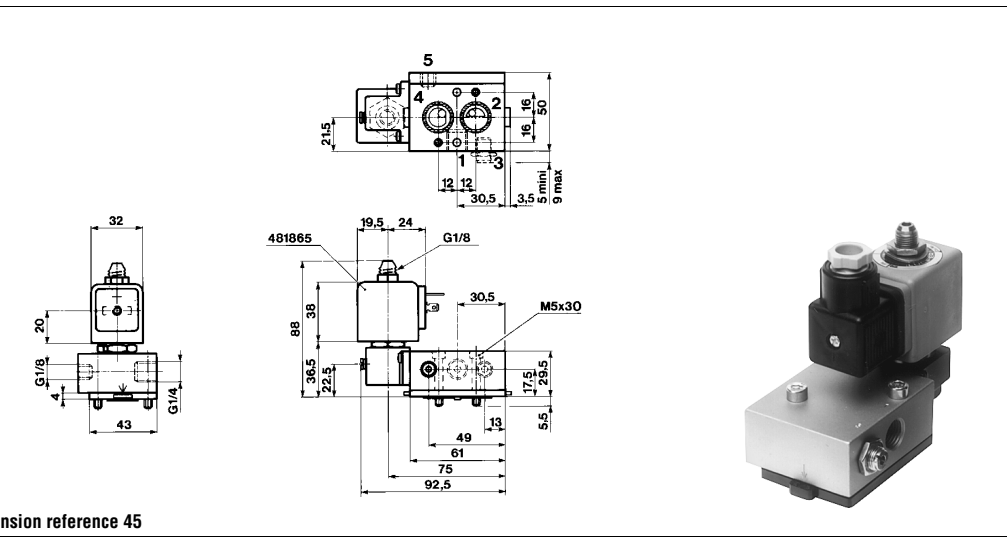

Dimension reference 45

Parker Lucifer SA
Fluid Control Division Europe
CH-1227 Carouge-Genève

Electrical parts options with 3/2, 5/2 valves for pneumatic actuator control

El.part Group	Coil	Protection class	Protection class / Temperature class	Power DC	Power AC	Coil Order No.	Coil Ref. No.	Connection	Housing Order No.	Housing Ref. No.	Ambient temp. min.	Ambient temp. max.
1	**22 mm**	IP 65	**Class F**	2.5 W	2 W	DA01	**488980**	for DIN plug	A0	**8993**	-40	50
		IP 65	**Class F**	2.5 W	2 W	DA02	**481045**	with DIN plug	A0	**8993**	-40	50
		IP 65	**Class F**	5 W	4 W	DA03	**481180**	for DIN plug	A0	**8993**	-40	50
		IP 65	**Class F**	5 W	4 W	DA04	**481530**	with DIN plug	A0	**8993**	-40	50
		IP 65	**EEx m II T4**	5 W	4 W	VA01	**482605**	with 1500mm cable	00	-	-40	50
		IP 65	**EEx m II T5**	2.5 W	2 W	VA02	**482606**	with 1500mm cable	00	-	-40	50
2	**32 mm**	IP 65	**Class F**	9 W	8 W	DZ02	**481865**	for DIN plug	N1	**2995**	-40	50
	(Std)	IP 65		9 W	8 W	DZ03	**482725**	with DIN plug	N1	**2995**	-40	50
		IP 65	**Class H**	9 W	8 W	DZ04	**482453**	for DIN plug	N1	**2995**	-40	50
		IP 65		9 W	8 W	DZ05	**492726**	with DIN plug	N1	**2995**	-40	50
		IP 65	**Class F, 50/60 Hz**	-	9 W	DZ06	**483510**	for DIN plug	N1	**2995**	-40	50
		IP 65		-	9 W	DZ07	**482635**	with DIN plug	N1	**2995**	-40	50
		IP 65	**EEx m II T4**	9 W	8 W	HZ05	**492670**	with 3000mm cable	00	-	-40	40
		IP 65	**Class H**	14 W	14 W	DZ08	**492425**	for DIN plug	N1	**2995**	-40	50
		IP 65		14 W	14 W	DZ09	**492727**	with DIN plug	N1	**2995**	-40	50
	50 mm	IP10 / IP 44	**Class F**	8 W	8 W	EZ01	**481000**	screw-terminals	E0	**4270**	-40	50
	(Std)	IP10 / IP 44	**Class H**	8 W	8 W	EZ02	**485100**	screw-terminals	E0	**4270**	-40	50
		IP 67	**Class F, M20x1.5**	8 W	8 W	EZ01	**481000**	screw-terminals	G1	**4538**	-40	50
		IP 65	**EEx m II T5/T4**	9 W	8 W	VZ01	**492070**	with 1500mm cable	00	-	-40	40/65
		IP 67	**EEx me II T4**	8 W	8 W	HZ06	**483371**	for cable connection	00	-	-40	65
		IP 66	**EEx me II T3/T4**	11 W	9 W	VZ03	**492190**	for cable connection	00	-	-40	75/40
3	**32 mm**	IP 65	**Class H**	-	14 W	DZ08	**492425**	for DIN plug	N1	**2995**	-40	50
4	**50 mm**	IP10 / IP 44	**Class F**	-	11 W	MZ01	**484990**	screw-terminals	E1	**4269**	-25	50
	(impulse)	IP10 / IP 44	**Class F**	13 W	-	MZ02	**485400**	screw-terminals	E1	**4269**	-25	50
5	**50 mm**	IP 54	**EEx d IIC T4/T5/T6**	8 W	8 W	HZ08	**483250**	for cable connection, 1/2 NPT	00	-	-40	80/75/60
6	**32 mm**	IP 65	**Class F**	1.6 W	-	DZ10	**482740**	for DIN plug	N1	**2995**	-40	50
	(Miniwatt)	IP 65	**Class F**	1.6W	-	DZ11	**482745**	with DIN plug	N1	**2995**	-40	50
	50 mm	IP 67	**EEx me II T5**	2.5 W	-	VZ04	**491117**	for cable connection	00	-	-40	65
	(Miniwatt)	IP 67	**EEx m II T5/T4**	2.5 W	2.5 W	VZ05	**492370**	with 1500mm cable	00	-	-40	40/65
		IP 66	**EEx me II T6/T5**	2.5 W	2.5 W	VZ06	**492390**	for cable connection	00	-	-40	40/75
7	**32 mm**	IP 65	**EEx ia II C T6**	0.4 W	-	DZ12	**483580.01**	for DIN plug	N1	**2995**	-25	55
		IP 65		0.4 W	-	DZ13	**483960.01**	with DIN plug	N1	**2995**	-25	55
	50 mm	IP 66	**EEx ia II C T6**	0.4 W	-	VZ07	**488650.01**	for cable connection	00	-	-25	65
		IP 67		0.4 W	-	VZ08	**488660.01**	with 2000mm cable	00	-	-25	65
		IP 65		0.4 W	-	VZ09	**488670.01**	with DIN plug	00	-	-25	65
9	**32 mm**	IP 65	**Class F**	9 W	9 W	DZ93	**492387**	with DIN plug	N9	**8886**	-40	50
	50 mm	IP 67	**EEx me II T4**	8 W	-	HZ14	**483371.01**	for cable connection	00	-	-40	65
CPR		IP 66	**EEx me II T6/T5**	1.5 W	-	VZ13	**492200**	for cable connection	00	-	-40	40/75
		IP 66	**EEx me II T5/T4**	6 W	6 W	VZ14	**492300**	for cable connection	00	-	-40	40/75
		IP 67	**EEx m II T5/T4**	5 W	5 W	VZ02	**492270**	with 1500mm cable	00	-	-40	40/65
		IP 66	**EEx ib IIB T6**	0.8 W	-	VZ11	**482660**	for cable connection	00	-	-40	75
		IP 66	**EEx ib IIC T6**	0.8 W	-	VZ12	**483330.01**	for cable connection	00	-	-40	75
		IP 66	**EEx ia IIC T6**	0.8W	-	VZ92	**492965.02**	for cable connection	00	-	-40	65
10	**50 mm**	IP 66	**EEx me II T6/T5**	1.5 W	-	VZ26	**492210**	for cable connection	00	-	-40	40/75
		IP 66	**EEx me II T5/T4**	6 W	6 W	VZ27	**492310**	for cable connection	00	-	-40	40/75
OFFSHORE		IP 66	**EEx ib IIB T6**	0.8 W	-	VZ11	**482660**	for cable connection	00	-	-40	75
		IP 66	**EEx ib IIC T6**	0.8 W	-	VZ12	**483330.01**	for cable connection	00	-	-40	75
		IP 66	**EEx ia IIC T6**	0.8W	-	VZ91	**492965.01**	for cable connection	00	-	-40	65
11	**50 mm**	IP 65	**EEx d II C T4/T5/T6**	8 W	8 W	HZ19	**483270**	for cable , M20x1.5	00	-	-40	80/75/60
		IP 65	**EEx d II C T4/T5/T6**	8 W	8 W	HZ21	**483270.02**	for cable , 1/2 NPT	00	-	-40	80/75/60
12	**50 mm**	IP 66	**EEx me II T5/T4**	6 W	6 W	VZ27	**492310**	for cable connection	00	-	-40	40/75
		IP 66	**EEx ib IIB T6**	0.8 W	-	VZ22	**482160.01**	for cable connection	00	-	-40	65
		IP 66	**EEx ib IIC T6**	0.8 W	-	VZ23	**482870.01**	for cable connection	00	-	-40	65

Note: This table is indicative only. Please contact your distributor to confirm your selection.

Parker Lucifer SA
Fluid Control Division Europe
CH-1227 Carouge-Genève

Tel: +45 63 12 83 00 | Email: ps@hymatik.com | www.hymatik.com | Hvidkaervej 27a, DK-5250 Odense SV, Denmark

316 St. Steel valves for chemical, petrochemical and offshore applications

ACTUATION	CONNECTION	ORIFICE (MM)	MAX. PRESSURE (BAR)	PAGE
Direct operated	1/4	2.5 to 5.0	1000.0	274/278
	3/8	5.0	1000.0	282
	SB	2.5	1400.0	276/278
Direct operated with manual reset	1/4	5.0	1000.0	274/280
	3/8	5.0	1000.0	274/276

Notes:

Parker Lucifer SA
Fluid Control Division Europe
CH-1227 Carouge-Genève

Tel: +45 63 12 83 00 | Email: ps@hymatik.com | www.hymatik.com | Hvidkaervej 27a, DK-5250 Odense SV, Denmark

316 St. Steel valves for chemical, petrochemical and offshore applications

3/2

Applications

Directional control and fail/safe function in valve actuator circuits in corrosive and hazardous environment.

Solenoid pilots for main stage valves in corrosive and hazardous locations.



Port size NPT	Orifice (mm)	Flow factors (L/min) Qn	Admissible differential pressure kPa Min	Max DC	Max AC	Fluid temp. °C	Admissible ambient temp. °C	Seat disc	Reference numbers Valve reference no.	Coil	Power consumption (W) DC	Power consumption (W) AC	Degree of protection Ex	El. Part Group *	Dim ref.
Direct operated with manual reset															

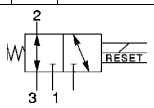

316L Stainless Steel body/Pipe mounting

1/4	5	680	0	1000	1000	-25 to +65	-25 to +65	NBR	**U033X51561D** [1]	**483270** [2]	8	8	EEx d IIC T4/T5/T6	11	7030
	5	680	0	1000	1000	-25 to +65	-25 to +65	NBR		**483270.02** [2]	8	8	EEx d IIC T5	11	
	5	680	0	1000	-	-25 to +65	-25 to +65	NBR	**U033X5156** [1]	**482870.01** [2]	0.8	-	EEx ia IIC T6	12	7771
	5	680	0	1000	1000	-25 to +65	-25 to +65	NBR		**492310** [2]	6	6	EEx me II T4(T5)	12	
3/8	5	680	0	1000	1000	-25 to +65	-25 to +65	NBR	**U033X52561D** [1]	**483270** [2]	8	8	EEx d II C T4(T6)	11	7672
	5	680	0	1000	1000	-25 to +65	-25 to +65	NBR		**483270.02** [2]	8	8	EEx d II C T4(T6)	11	

Table continued on page 276

Notes:

* See Electrical Parts Group table at end of section

1. With manual reset
2. Valve with NPT ports

Parker Lucifer SA
Fluid Control Division Europe
CH-1227 Carouge-Genève

316 St. Steel valves for chemical, petrochemical and offshore applications

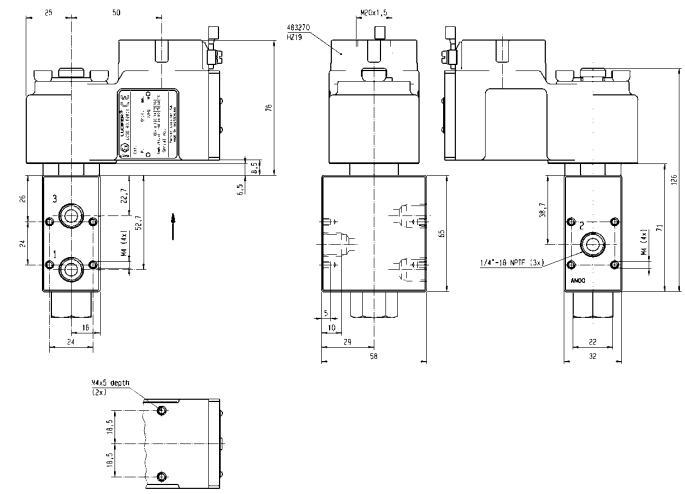

Dimension reference 7030

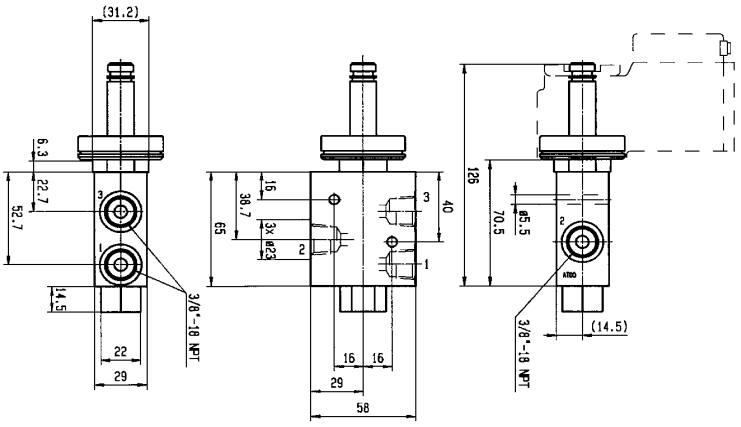

Dimension reference 7672

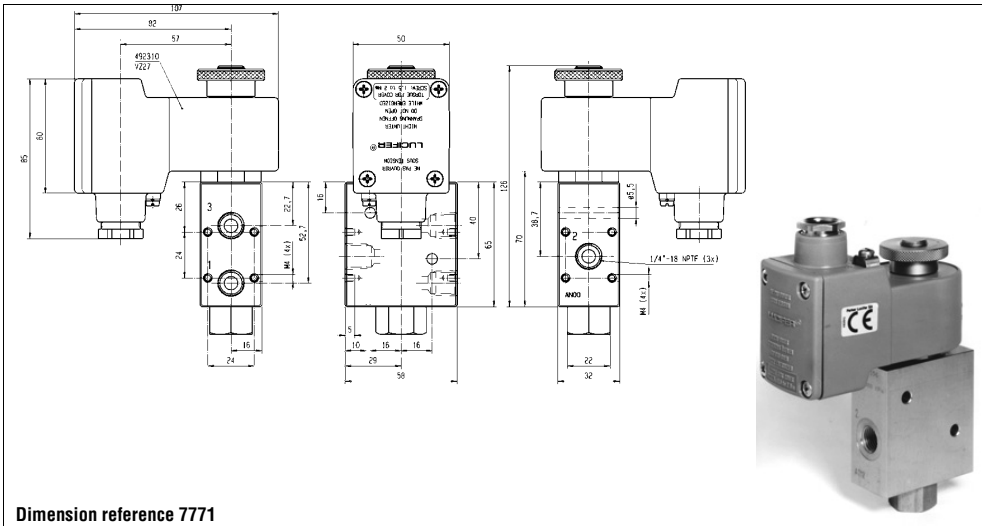

Dimension reference 7771

Parker Lucifer SA
Fluid Control Division Europe
CH-1227 Carouge-Genève

316 St. Steel valves for chemical, petrochemical and offshore applications

Port size NPT	Orifice (mm)	Flow factors (L/min) Qn	Admissible differential pressure kPa Min	Max DC	Max AC	Fluid temp. °C	Admissible ambient temp. °C	Seat disc	Reference numbers Valve reference no.	Coil	Power consumption (W) DC	Power consumption (W) AC	Degree of protection Ex	El. Part Group *	Dim ref.
Direct operated with manual reset															
316L Stainless Steel body/Pipe mounting															
3/8	5	680	0	1000	-	-25 to +65	-25 to +65	NBR	**U033X5256** 1	**482870.01** 2	0.8	-	EEx ia IIC T6	12	7671
	5	680	0	1000	1000	-25 to +65	-25 to +65	NBR		**492310** 2	6	6	EEx me II T4(T5)	12	
Direct operated															
316L Stainless Steel body/NAMUR interface															
3/8	5	680	0	1000	1000	-25 to +65	-25 to +65	NBR	**U131X1201** 2	**492965.01**	0.8	-	EEx ia IIC T6	9,10	7668
	5	680	0	1000	1000	-25 to +65	-25 to +65	NBR		**492310**	6	6	EEx me IIT4/T5	9,10	
Direct operated															
316L Stainless Steel body/Sub-base mounting															
SB	2.5	220	0	1000	-	-25 to +65	-25 to +50	FKM	**U131F5695** 2	**492965.01**	0.8	-	EEx ia IIC T6	10	85
	2.5	220	0	1000	1000	-25 to +75	-25 to +50	FKM		**492310**	6	6	EEx me II T4(T5)	10	

Table continued on page 278

Notes:

* See Electrical Parts Group table at end of section

1. With manual reset
2. Valve with NPT ports

Parker Lucifer SA
Fluid Control Division Europe
CH-1227 Carouge-Genève

Tel: +45 63 12 83 00 | Email: ps@hymatik.com | www.hymatik.com | Hvidkaervej 27a, DK-5250 Odense SV, Denmark

316 St. Steel valves for chemical, petrochemical and offshore applications

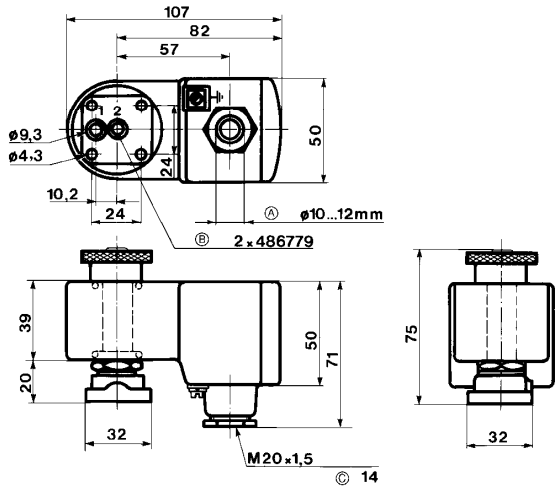

Dimension reference 85

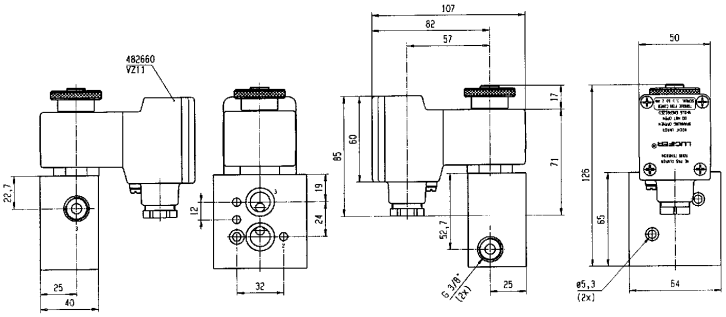

Dimension reference 7668

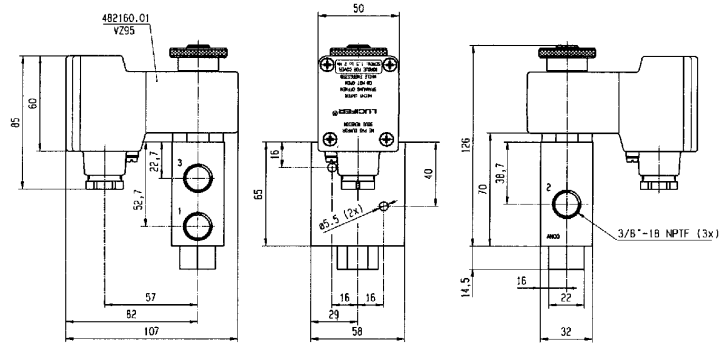

Dimension reference 7671

Parker Lucifer SA
Fluid Control Division Europe
CH-1227 Carouge-Genève

316 St. Steel valves for chemical, petrochemical and offshore applications

Port size NPT	Orifice (mm)	Flow factors (L/min) Qn	Admissible differential pressure kPa Min	Max DC	Max AC	Fluid temp. °C	Admissible ambient temp. °C	Seat disc	Reference numbers Valve reference no.	Coil	Power consumption (W) DC	AC	Degree of protection Ex	El. Part Group *	Dim ref.
										Direct operated					

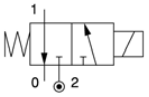

316L Stainless Steel body/Sub-base mounting

SB	2.5	220	0	1400	1400	-25 to +80	-25 to +50	FKM	**U131F56951D** 1	**483270**	8	8	EEx d IIC T5	11	3783
	2.5	220	0	1400	1400	-25 to +80	-25 to +50	FKM		**483270.02**	8	8	EEx d IIC T5	11	
										Direct operated					

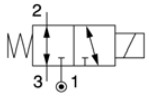

316L Stainless Steel body/Pipe mounting

1/4	2.5	220	0	850	-	-25 to +75	-25 to +50	FKM	**U133V5695** 1	**492965.01** 2	0.8	-	EEx ia IIC T6	10	86
	2.5	220	0	850	850	-25 to +75	-25 to +50	FKM		**492310** 3	6	6	EEx me II T4(T5)	10	
	2.5	220	0	850	850	-25 to +75	-25 to +50	FKM	**U133V56951D** 1	**483270**	8	8	EEx d IIC T5	11	6714
	2.5	220	0	850	850	-25 to +75	-25 to +50	FKM		**483270.02**	8	8	EEx d IIC T5	11	

Table continued on page 280

Notes:

* See Electrical Parts Group table at end of section

1. Valve with NPT ports
2. Max. power consumption DC = 1 W with connected cable length max. 4 km (2 km back and forth), section 1 mm²
3. Other coil-housing available

Parker Lucifer SA
Fluid Control Division Europe
CH-1227 Carouge-Genève

Tel: +45 63 12 83 00 | Email: ps@hymatik.com | www.hymatik.com | Hvidkaervej 27a, DK-5250 Odense SV, Denmark

316 St. Steel valves for chemical, petrochemical and offshore applications

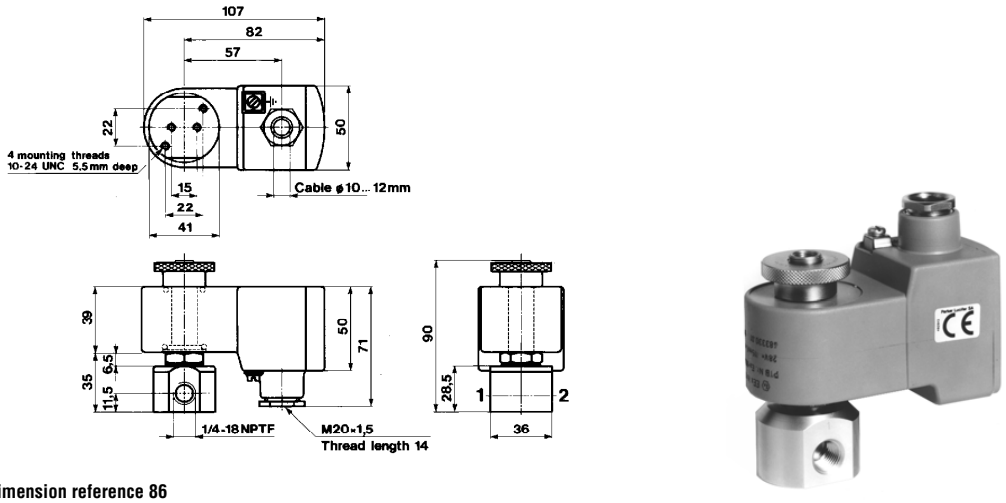

Dimension reference 86

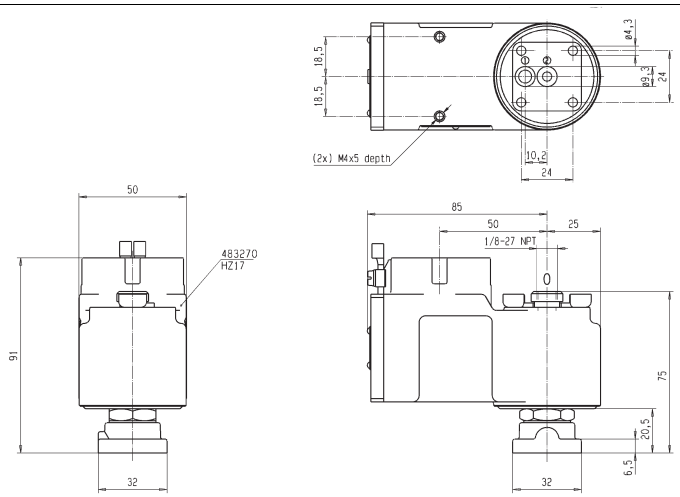

Dimension reference 3783

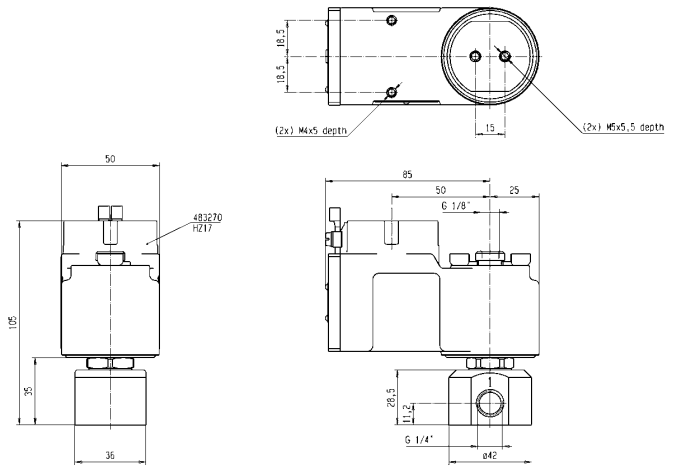

Dimension reference 6714

Parker Lucifer SA
Fluid Control Division Europe
CH-1227 Carouge-Genève

316 St. Steel valves for chemical, petrochemical and offshore applications

Port size NPT	Orifice (mm)	Flow factors (L/min) Qn	Admissible differential pressure kPa Min	Max DC	Max AC	Fluid temp. °C	Admissible ambient temp. °C	Seat disc	Reference numbers Valve reference no.	Coil	Power consumption (W) DC	AC	Degree of protection Ex	El. Part Group *	Dim ref.
Direct operated															
316L Stainless Steel body/Pipe mounting															
1/4	5	680	0	1000	-	-25 to +65	-25 to +65	NBR	**U133X5156** 1	**492965.01**	0.8	-	EEx ia IIC T6	10	7770
	5	680	0	1000	1000	-25 to +65	-25 to +65	NBR		**492310**	6	6	EEx me II T4(T5)	10	
Direct operated															
316L Stainless Steel body/Pipe mounting															
1/4	5	680	0	1000	1000	-25 to +65	-25 to +65	NBR	**U133X51561D** 1	**483270**	8	8	EEx d IIC T4/T5/T6	11	7011
	5	680	0	1000	1000	-25 to +65	-25 to +65	NBR		**483270.02**	8	8	EEx d IIC T4/T5/T6	11	
	5	680	0	1000	-	-25 to +65	-25 to +65	NBR	**U133X5196** 2	**492965.01** 1	0.8	-	EEx ia IIC T6	10	7770
	5	680	0	1000	1000	-25 to +65	-25 to +65	NBR		**492310** 1	6	6	EEx me II T4(T5)	10	
	5	680	0	1000	1000	-25 to +65	-25 to +65	NBR	**U133X51961D** 1	**483270**	8	8	EEx d IIC T5	11	7038
	5	680	0	1000	1000	-25 to +65	-25 to +65	NBR		**483270.02**	8	8	EEx d IIC T5	11	

Table continued on page 282

Notes:

* See Electrical Parts Group table at end of section

1. Valve with NPT ports
2. Optional manual override available on request - change suffix 96 to 56

Valve with NPT ports

Parker Lucifer SA
Fluid Control Division Europe
CH-1227 Carouge-Genève

316 St. Steel valves for chemical, petrochemical and offshore applications

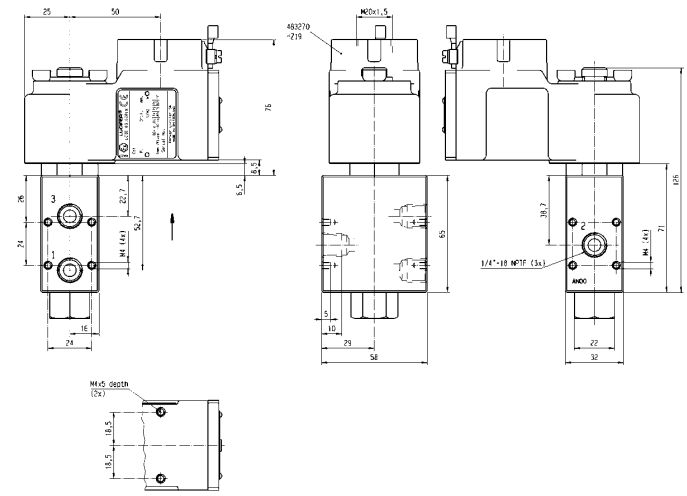

Dimension reference 7011

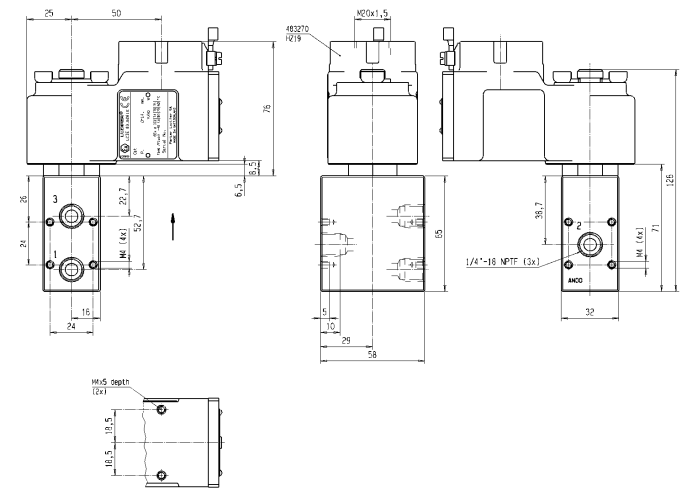

Dimension reference 7038

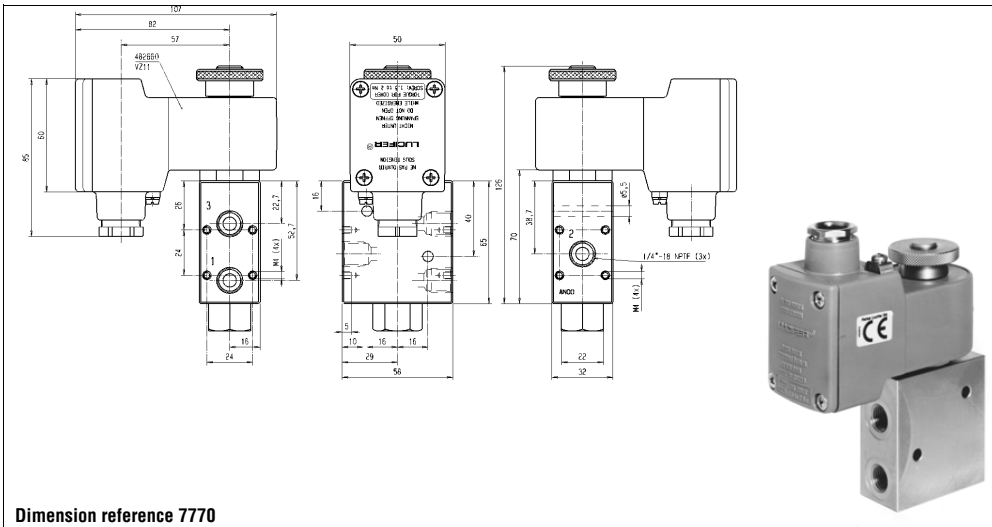

Dimension reference 7770

Parker Lucifer SA
Fluid Control Division Europe
CH-1227 Carouge-Genève

316 St. Steel valves for chemical, petrochemical and offshore applications

Port size NPT	Orifice (mm)	Flow factors (L/min) Qn	Admissible differential pressure kPa Min	Max DC	Max AC	Fluid temp. °C	Admissible ambient temp. °C	Seat disc	Reference numbers Valve reference no.	Coil	Power consumption (W) DC	AC	Degree of protection Ex	El. Part Group *	Dim ref.
Direct operated															
316L Stainless Steel body/Pipe mounting															
3/8	5	680	0	1000	1000	-25 to +65	-25 to +65	NBR	**U133X5296** 1	**492965.01**	0.8	-	EEx ia IIC T6	10	7669
	5	680	0	1000	1000	-25 to +65	-25 to +65	NBR		**492310**	6	6	EEx me II T4(T5)	10	
	5	680	0	1000	1000	-25 to +65	-25 to +65	NBR	**U133X52961D** 1	**483270**	8	8	EEx d IIC T4/T5/T6	10	7670
	5	680	0	1000	1000	-25 to +65	-25 to +65	NBR		**483270.02**	8	8	EEx d IIC T4/T5/T6	10	

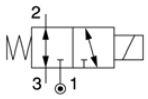

Notes:

* See Electrical Parts Group table at end of section

1. Valve with NPT ports

Parker Lucifer SA
Fluid Control Division Europe
CH-1227 Carouge-Genève

316 St. Steel valves for chemical, petrochemical and offshore applications

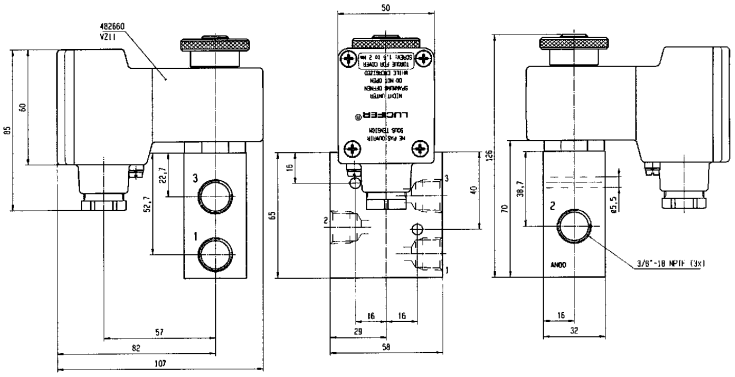

Dimension reference 7669

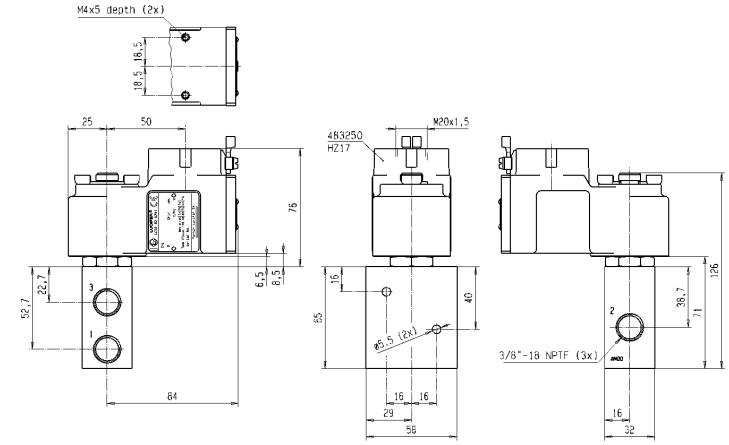

Dimension reference 7670

Parker Lucifer SA
Fluid Control Division Europe
CH-1227 Carouge-Genève

NOTES

Parker Lucifer SA
Fluid Control Division Europe
CH-1227 Carouge-Genève

NOTES

Parker Lucifer SA
Fluid Control Division Europe
CH-1227 Carouge-Genève

Electrical parts options with 3/2 - 316L Stainless steel valves for chemical, petrochemical & Offshore applications

El.part Group	Coil	Protection class	Protection class / Temperature class	Power DC	Power AC	Coil Order No.	Coil Ref. No.	Connection	Housing Order No.	Housing Ref. No.	Ambient temp. min.	Ambient temp. max.
1	22 mm	IP65	**Class F**	2.5	2	DA01	**488980**	for DIN B plug	A2	**8993**	-40	50
		IP65	**Class F**	2.5	2	DA02	**481045**	with DIN B plug	A2	**8993**	-40	50
		IP65	**EEx m II T5**	2.5	2	VA12	**482606.10**	with 1500mm cable	00	-	-40	50
2	32 mm (Std)	IP65	**Class F**	9	8	DZ02	**481865**	for DIN A plug	NL	**8132**	-40	50
		IP65	**Class F**	9	8	DZ03	**482725**	with DIN A plug	NL	**8132**	-40	50
		IP65	**Class H**	9	8	DZ04	**492453**	for DIN A plug	NL	**8132**	-40	50
		IP65	**Class H**	9	8	DZ05	**492726**	with DIN A plug	NL	**8132**	-40	50
		IP65	**Class F, 50/60 Hz**	-	9	DZ06	**483510**	for DIN A plug	NL	**8132**	-40	50
		IP65	**Class F, 50/60 Hz**	-	9	DZ07	**482635**	with DIN A plug	NL	**8132**	-40	50
		IP65	**EEx m II T4**	9	8	HZ90	**492670.10**	with 3000mm cable	00	-	-25	40
	50 mm (Std)	IP10/IP44	**Class F**	8	8	EZ01	**481000**	screw-terminals	E0	**4270**	-40	50
		IP10/IP44	**Class H**	8	8	EZ02	**485100**	screw-terminals	E0	**4270**	-40	50
		IP67	**Class F, IP 67, M20x1.5**	8	8	EZ01	**481000**	screw-terminals	G1	**4538**	-40	50
		IP65	**EEx m II T4/T5**	9	8	VZ01	**492070**	with 1500mm cable	00	-	-40	40/65
		IP67	**EEx me II T4**	8	8	HZ06	**483371**	for cable connection	00	-	-40	65
		IP66	**EEx me II T3/T4**	11	9	VZ90	**492190.10**	for cable connection	00	-	-40	75/40
		IP67	**EEx me II T3/T4**	8	8	HZ23	**494040**	for cable connection	00	-	-40	90/65
		IP65	**EEx md IIC T4/T5**	8	8	HZ09	**493640**	with 1500mm cable	00	-	-40	75/40
5	50 mm	IP54	**EEx d IIC T4/T5/T6**	8	8	HZ08	**483250**	for cable, 1/2 NPT	00	-	-40	80/75/60
7	32 mm I.S.	IP65	**EEx ia II C T6**	0.4	-	DZ12	**483580.01**	for DIN A plug	NL	**8132**	-40	55
		IP65	**EEx ia II C T6**	0.4	-	DZ13	**483960.01**	with DIN A plug	NL	**8132**	-40	55
	50 mm I.S.	IP66	**EEx ia II C T6**	0.4	-	VZ93	**494035.10**	for cable connection	00	-	-40	65
		IP67	**EEx ia II C T6**	0.4	-	VZ08	**488660.01**	with 2000mm cable	00	-	-40	65
		IP65	**EEx ia II C T6**	0.4	-	VZ09	**488670.01**	with DIN A plug	00	-	-40	65
9 CPR	32 mm	IP65	**Class F**	9	9	DZ93	**492387**	with DIN A plug	N9	**8886**	-40	50
	50 mm	IP66	**EEx me II T5/T6**	1.5	-	VZ13	**492200**	for cable connection	00	-	-40	75/40
		IP67	**EEx me II T4**	8	-	VZ14	**483371.01**	for cable connection	00	-	-40	65
		IP66	**EEx me II T4/T5**	6	6	VZ15	**492300**	for cable connection	00	-	-40	75/40
		IP67	**EEx m II T4/T5**	5	5	VZ02	**492270**	with 1500mm cable	00	-	-40	65/40
		IP65	**EEx ib IIB T6**	0.8	-	VZ11	**482660**	for cable connection	00	-	-40	75
		IP66	**EEx ib IIC T6**	0.8	-	VZ12	**483330.01**	for cable connection	00	-	-40	75
		IP66	**EEx ia IIC T6**	0.8	-	VZ92	**492965.02**	for cable connection	00	-	-40	65
10 OFFSHORE	50 mm	IP66	**EEx me II T5/T6**	1.5	-	VZ26	**492210**	for cable connection	00	-	-40	75/40
		IP66	**EEx me II T4/T5**	6	6	VZ27	**492310**	for cable connection	00	-	-40	75/40
		IP65	**EEx ib IIB T6**	0.8	-	VZ11	**482660**	for cable connection	00	-	-40	75
		IP66	**EEx ib IIC T6**	0.8	-	VZ12	**483330.01**	for cable connection	00	-	-40	75
		IP66	**EEx ia IIC T6**	0.8	-	VZ91	**492965.01**	for cable connection	00	-	-40	65
11	50 mm	IP65	**EEx d II C T4/T5/T6**	8	8	HZ19	**483270**	for cable , M20x1.5	00	-	-40	80/75/60
	EEx d	IP65	**EEx d II C T4/T5/T6**	8	8	HZ21	**483270.02**	for cable , 1/2 NPT	00	-	-40	80/75/60
12	50 mm	IP66	**EEx me II T4/T5**	6	6	VZ27	**492310**	for cable connection	00	-	-40	75/40
		IP66	**EEx ia IIB T6**	0.8	-	VZ22	**482160.01**	for cable connection	00	-	-40	65
		IP66	**EEx ia IIC T6**	0.8	-	VZ23	**482870.01**	for cable connection	00	-	-40	65

Note: This table is indicative only. Please contact your distributor to confirm your selection.

Parker Lucifer SA
Fluid Control Division Europe
CH-1227 Carouge-Genève

316L St. Steel valves for actuator control

ACTUATION	CONNECTION	ORIFICE (MM)	MAX. PRESSURE (BAR) <KPA>	PAGE
Direct operated	1/4	2.5 to 5	<1000.0>	288
	3/8	5	<1000.0>	290/292
	SB	2.5	<1000.0>	292
Pilot operated	1/4 - 1/8	4	10.0	296/298/308/310
	3/8 - 1/4	8	10.0	300/302/312
Pilot operated - Integrated pilot	1/4 - 1/8	4	10.0	296/308
	3/8 - 1/4	8	10.0	298/310
Two solenoids and main pressure supply	1/4 - 1/8	4	10.0	304/314
	3/8 - 1/4	8	10.0	304/306/314
Pilot operated with external pressure supply	3/8 - 1/4	8	10.0	302
External pressure supply	3/8 - 1/4	8	10.0	302
Direct operated with manual reset	1/4	5	<1000.0>	292/294
	3/8	5	<1000.0>	294

Notes:

Parker Lucifer SA
Fluid Control Division Europe
CH-1227 Carouge-Genève

Tel: +45 63 12 83 00 | Email: ps@hymatik.com | www.hymatik.com | Hvidkaervej 27a, DK-5250 Odense SV, Denmark

316 St. Steel valves for actuator control

3/2

Applications

Directional control and fail/safe function in valve actuator circuits in corrosive and hazardous environment.

Solenoid pilots for main stage valves in corrosive and hazardous locations.

Port size	Orifice (mm)	Flow factors (L/min	Admissible differential pressure kPa			Fluid temp. °C		Seat disc	Reference numbers			OR	Power consumption (W)		Wt. (g)	El. Part Group *	Dim ref.
			Min	Max		Min	Max		Global valve reference	Valve reference no.	Housing	Coil	DC	AC			
NPT		Qn		DC	AC												

316L Stainless Steel body/Pipe mounting

Direct operated

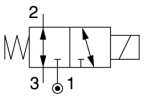

1/4	2.5	220	0	850	850	-25	75	FKM	7133VRN2LV9D	**U133V56951D** [1]	-	**483270**	8	8	-	11	6714
	2.5	220	0	850	850	-25	75	FKM			-	**483270.02**	8	8	-	11	
	2.5	220	0	850	-	-25	75	FKM	7133VRN2LV95	**U133V5695** [1]	-	**492965.01** [2]	0.8	-	-	10	86
	2.5	220	0	850	850	-25	75	FKM			-	**492310** [3]	6	6	-	10	
	5	680	0	1000	1000	-25	65	NBR	7133XRN2SV1D	**U133X51561D** [1]	-	**483270**	8	8	1960	11	7011
	5	680	0	1000	1000	-25	65	NBR			-	**483270.02**	8	8	1960	11	

Table continued on page 290

Notes:

* See Electrical Parts Group table at end of section

1. Valve with NPT ports
2. Max. power consumption DC = 1 W with connected cable length max. 4 km (2 km back and forth), section 1 mm²
3. Other coil-housing available

Parker Lucifer SA
Fluid Control Division Europe
CH-1227 Carouge-Genève

Tel: +45 63 12 83 00 | Email: ps@hymatik.com | www.hymatik.com | Hvidkaervej 27a, DK-5250 Odense SV, Denmark

316 St. Steel valves for actuator control

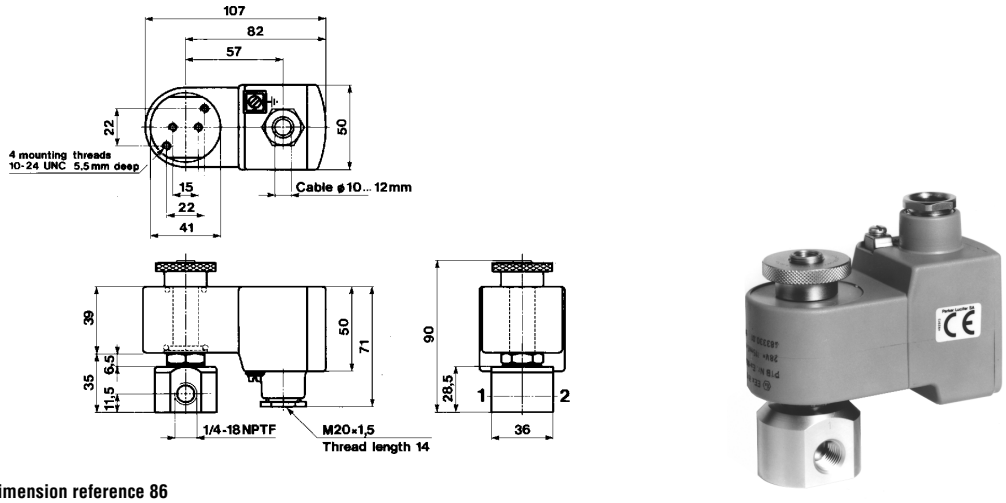

Dimension reference 86

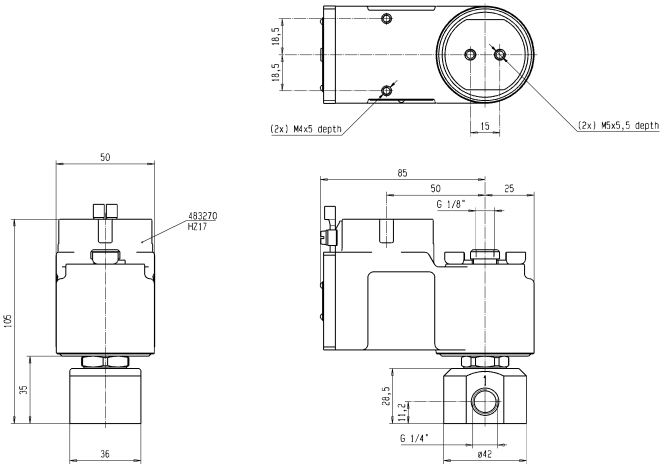

Dimension reference 6714

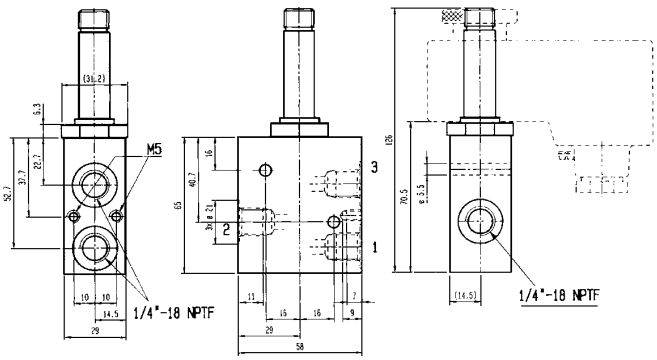

Dimension reference 7011

Parker Lucifer SA
Fluid Control Division Europe
CH-1227 Carouge-Genève

Tel: +45 63 12 83 00 | Email: ps@hymatik.com | www.hymatik.com | Hvidkaervej 27a, DK-5250 Odense SV, Denmark

316 St. Steel valves for actuator control

Port size	Orifice (mm)	Flow factors (L/min	Admissible differential pressure kPa			Fluid temp. °C		Seat disc	Reference numbers			OR	Power consumption (W)		Wt. (g)	El. Part Group *	Dim ref.
			Min	Max													
NPT		Qn		DC	AC	Min	Max		Global valve reference	Valve reference no.	Housing	Coil	DC	AC			

316L Stainless Steel body/Pipe mounting

Direct operated

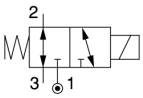

1/4	5	680	0	1000	-	-25	65	NBR	7133XRN2SV00	**U133X5156** [1]	-	**492965.01**	0.8	-	1340	10	7770
	5	680	0	1000	1000	-25	65	NBR			-	**492310**	6	6	1340	10	
3/8	5	680	0	1000	1000	-25	65	NBR	7133XRN3SN9H	**U133X52961D** [1]	-	**483270**	8	8	1940	10	7670
	5	680	0	1000	1000	-25	65	NBR			-	**483270.02**	8	8	1940	10	
	5	680	0	1000	1000	-25	65	NBR	7133XRN3SN96	**U133X5296** [1]	-	**492965.01**	0.8	-	-	10	7669
	5	680	0	1000	1000	-25	65	NBR			-	**492310**	6	6	-	10	

Table continued on page 292

Notes:

* See Electrical Parts Group table at end of section

1. Valve with NPT ports

Parker Lucifer SA
Fluid Control Division Europe
CH-1227 Carouge-Genève

Tel: +45 63 12 83 00 | Email: ps@hymatik.com | www.hymatik.com | Hvidkaervej 27a, DK-5250 Odense SV, Denmark

316 St. Steel valves for actuator control

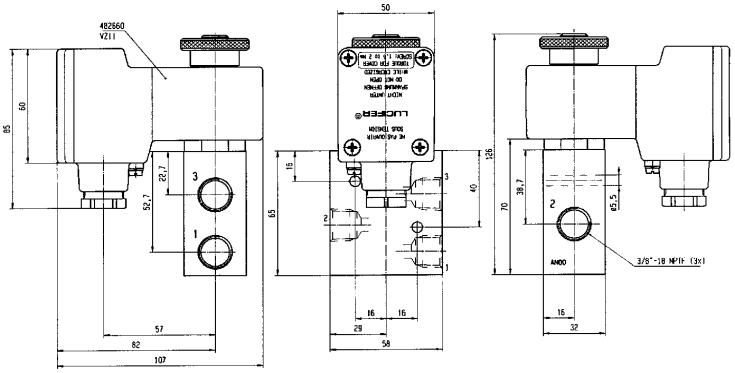

Dimension reference 7669

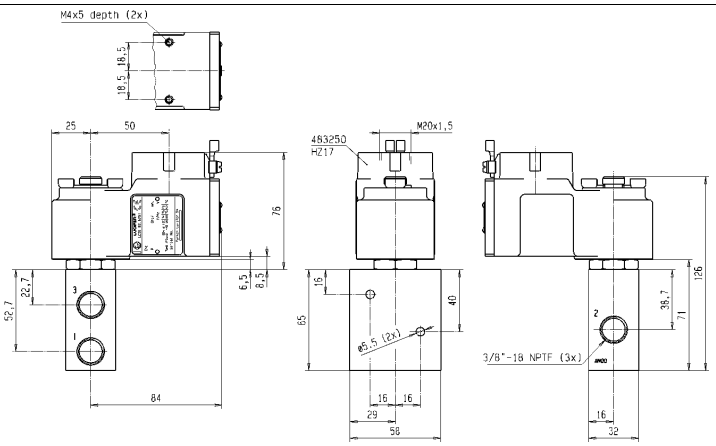

Dimension reference 7670

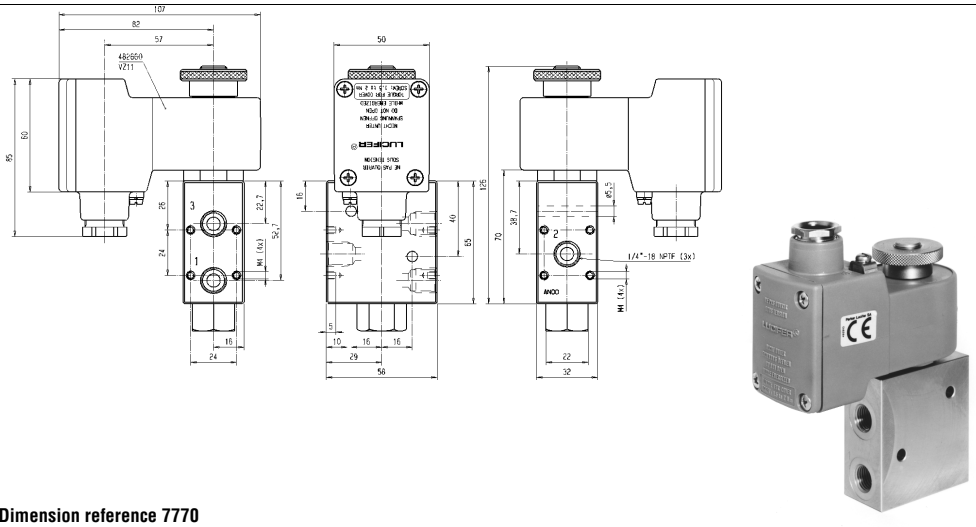

Dimension reference 7770

Parker Lucifer SA
Fluid Control Division Europe
CH-1227 Carouge-Genève

316 St. Steel valves for actuator control

Port size NPT	Orifice (mm)	Flow factors (L/min Qn	Admissible differential pressure kPa Min	Max DC	Max AC	Fluid temp. °C Min	Max	Seat disc	Reference numbers Global valve reference	Valve reference no.	Housing	OR Coil	Power consumption (W) DC	AC	Wt. (g)	El. Part Group *	Dim ref.

316L Stainless Steel body/Sub-base mounting

Direct operated

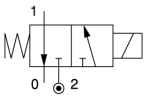

SB	2.5	220	0	1000	-	-25	65	FKM	7131FRF2LV95	**U131F5695** 1	-	**492965.01**	0.8	-	700	10	85
	2.5	220	0	1000	1000	-25	75	FKM			-	**492310**	6	6	700	10	

316L Stainless Steel body/NAMUR interface

Direct operated

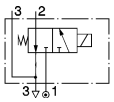

3/8	5	680	0	1000	1000	-25	65	NBR	7131XRKMVN00	**U131X1201** 1	-	**492965.01**	0.8	-	-	9,10	7668
	5	680	0	1000	1000	-25	65	NBR			-	**492310**	6	6	-	9,10	

316L Stainless Steel body/Pipe mounting

Direct operated with manual reset

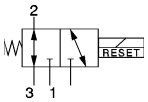

1/4	5	680	0	1000	1000	-25	65	NBR	7033XRN2SN1D	**U033X51561D** 2	-	**483270** 1	8	8	2150	11	7030
	5	680	0	1000	1000	-25	65	NBR			-	**483270.02** 1	8	8	2150	11	

Table continued on page 294

Notes:

* See Electrical Parts Group table at end of section

1. Valve with NPT ports
2. With manual reset

Parker Lucifer SA
Fluid Control Division Europe
CH-1227 Carouge-Genève

316 St. Steel valves for actuator control

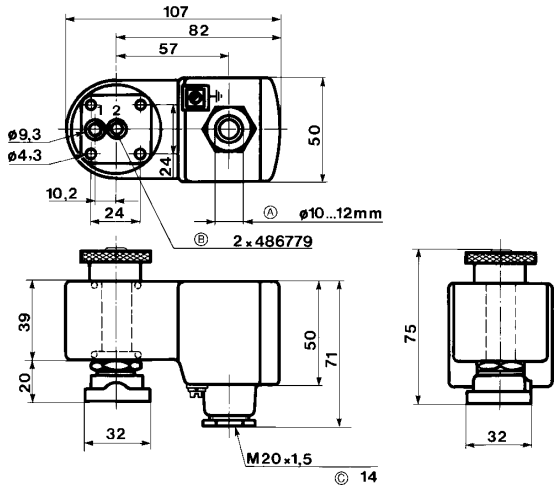

Dimension reference 85

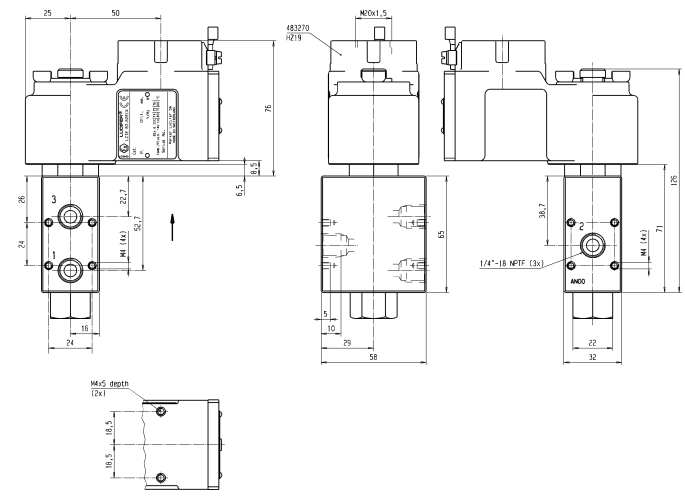

Dimension reference 7030

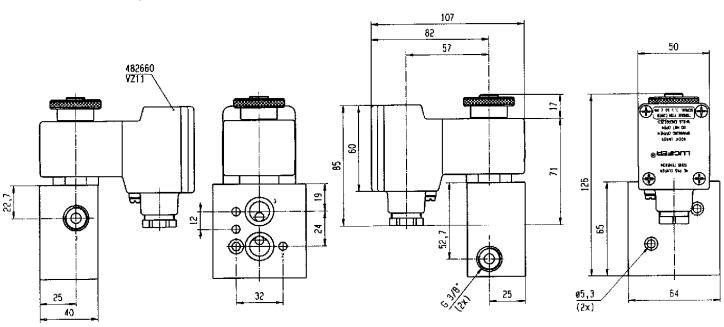

Dimension reference 7668

Parker Lucifer SA
Fluid Control Division Europe
CH-1227 Carouge-Genève

316 St. Steel valves for actuator control

Port size	Orifice (mm)	Flow factors (L/min	Admissible differential pressure kPa			Fluid temp. °C		Seat disc	Reference numbers			OR	Power consumption (W)		Wt. (g)	El. Part Group *	Dim ref.
			Min	Max													
NPT		Qn		DC	AC	Min	Max		Global valve reference	Valve reference no.	Housing	Coil	DC	AC			

316L Stainless Steel body/Pipe mounting

Direct operated with manual reset

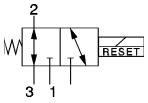

1/4	5	680	0	1000	-	-25	65	NBR	7033XRN2SN00	**U033X5156** [1]	-	**482870.01** [2]	0.8	-	1300	12	7771
	5	680	0	1000	1000	-25	65	NBR			-	**492310** [2]	6	6	1300	12	
3/8	5	680	0	1000	1000	-25	65	NBR	7033XRN3SN1D	**U033X52561D** [1]	-	**483270** [2]	8	8	1980	11	7672
	5	680	0	1000	1000	-25	65	NBR			-	**483270.02** [2]	8	8	1980	11	
	5	680	0	1000	-	-25	65	NBR	7033XRN3SN00	**U033X5256** [1]	-	**482870.01** [2]	0.8	-	1300	12	7671
	5	680	0	1000	1000	-25	65	NBR			-	**492310** [2]	6	6	1300	12	

Notes:

* See Electrical Parts Group table at end of section

1. With manual reset
2. Valve with NPT ports

Parker Lucifer SA
Fluid Control Division Europe
CH-1227 Carouge-Genève

Tel: +45 63 12 83 00 | Email: ps@hymatik.com | www.hymatik.com | Hvidkaervej 27a, DK-5250 Odense SV, Denmark

316 St. Steel valves for actuator control

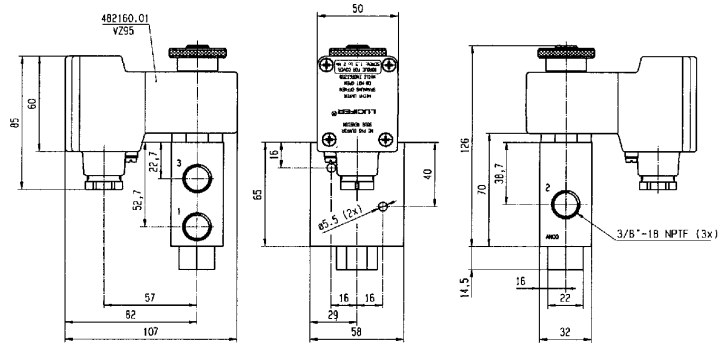

Dimension reference 7671

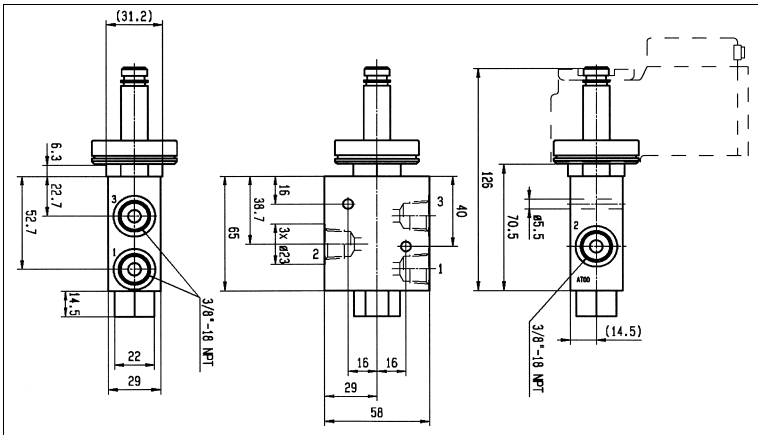

Dimension reference 7672

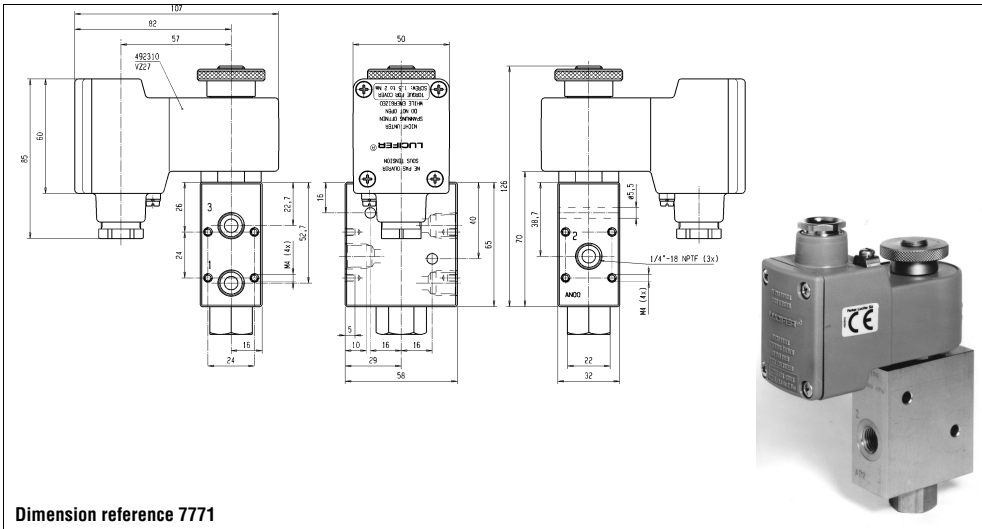

Dimension reference 7771

Parker Lucifer SA
Fluid Control Division Europe
CH-1227 Carouge-Genève

316L St. Steel valves for actuator control

5/2

Applications

Directional control and fail/safe function in valve actuator circuits in corrosive and hazardous environment.

Solenoid pilots for main stage valves in corrosive and hazardous locations.

Port size NPT	Orifice (mm)	Flow factors (L/min Qn	Admissible differential pressure bar Min	Max DC	Max AC	Fluid temp. °C Min	Max	Seat disc	Reference numbers Global valve reference	Valve reference no.	Housing	OR Coil	Power consumption (W) DC	AC	Wt. (g)	El. Part Group *	Dim ref.
Pilot operated - Integrated pilot																	
1/4 - 1/8	4	600	2	10	10	-25	80	NBR	2341PRN2JNM1	**U341P0150** [1]	**A2**	**488980** [2]	2.5	2	220	1	7576

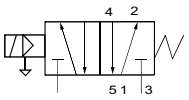

316L Stainless Steel body/Pipe mounting

Pilot operated																	
1/4 - 1/8	4	600	2	10	10	-25	80	NBR	7341PRN2JN00	**U341P3150** [2]	**NL**	**481865**	9	8	420	2	7547
	4	600	2	10	10	-25	80	NBR			**E0**	**481000**	8	8	420	2	
	4	600	2	10	10	-25	55	NBR	7341PRN2JN92	**U341P3192** [2]	**NL**	**483580.01**	0.4	-	420	7	7549

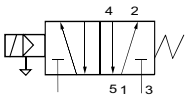

316L Stainless Steel body/Pipe mounting

Table continued on page 298

Notes:

* See Electrical Parts Group table at end of section

1. Manual override standard
2. Valve with NPT ports

Parker Lucifer SA
Fluid Control Division Europe
CH-1227 Carouge-Genève

Tel: +45 63 12 83 00 | Email: ps@hymatik.com | www.hymatik.com | Hvidkaervej 27a, DK-5250 Odense SV, Denmark

316L Stainless Steel valves for actuator control - 5/2 valves - Pipe connection

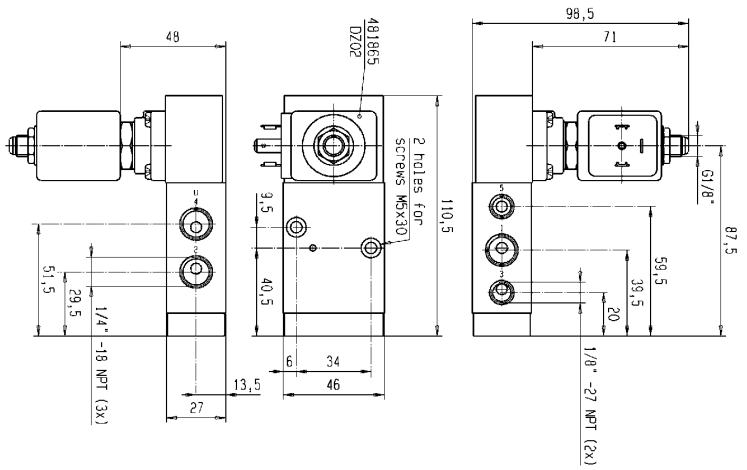

Dimension reference 7547

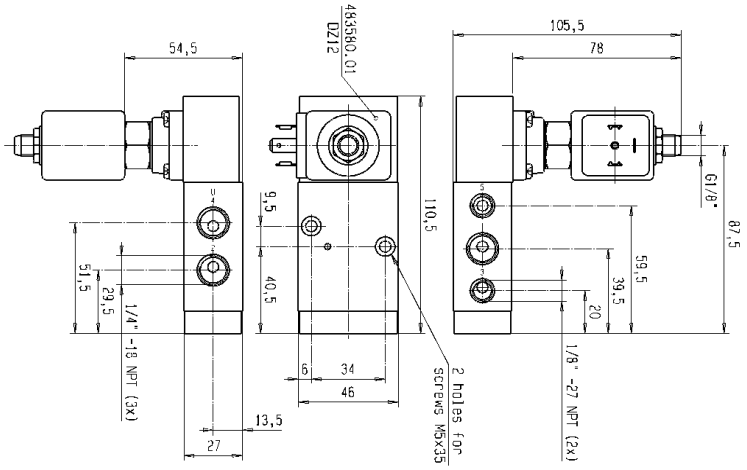

Dimension reference 7549

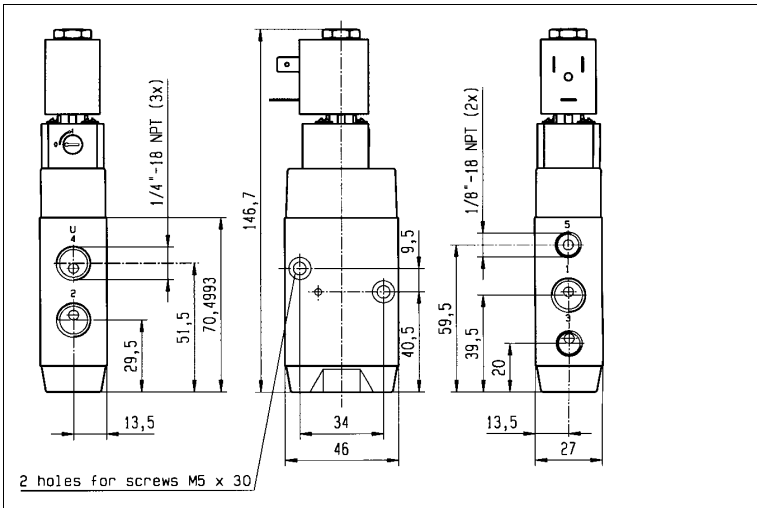

Dimension reference 7576

Parker Lucifer SA
Fluid Control Division Europe
CH-1227 Carouge-Genève

316L Stainless Steel valves for actuator control - 5/2 valves - Pipe connection

Port size	Orifice (mm)	Flow factors (L/min	Admissible differential pressure bar			Fluid temp. °C		Seat disc	Reference numbers			OR	Power consumption (W)		Wt. (g)	El. Part Group *	Dim ref.
			Min	Max													
NPT		Qn		DC	AC	Min	Max		Global valve reference	Valve reference no.	Housing	Coil	DC	AC			
Pilot operated																	
316L Stainless Steel body/Pipe mounting																	
1/4 - 1/8	4	600	2	10	10	-25	75	NBR	7341PRN2JN95	**U341P3195** 1	-	**492965.01**	0.8	-	-	10	7550
	4	600	2	10	10	-25	75	NBR			-	**492310**	6	6	-	10	
	4	600	2	10	10	-10	75	NBR	7341PRN2JN9D	**U341P31951D** 1	-	**483270**	8	8	-	11	7551
	4	600	2	10	10	-10	75	NBR			-	**483270.02**	8	8	-	11	
Pilot operated - Integrated pilot																	
316L Stainless Steel body/Pipe mounting																	
3/8 - 1/4	8	1400	2	10	10	-25	80	NBR	2341PRN3NNM1	**U341P0250** 2	**A2**	**488980** 1	2.5	2	-	1	7578

Table continued on page 300

Notes:

* See Electrical Parts Group table at end of section

1. Valve with NPT ports
2. Manual override standard

Parker Lucifer SA
Fluid Control Division Europe
CH-1227 Carouge-Genève

Tel: +45 63 12 83 00 | Email: ps@hymatik.com | www.hymatik.com | Hvidkaervej 27a, DK-5250 Odense SV, Denmark

316L Stainless Steel valves for actuator control - 5/2 valves - Pipe connection

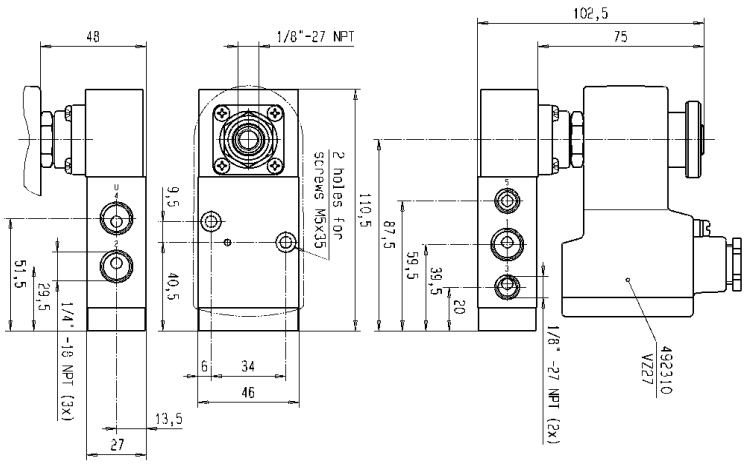

Dimension reference 7550

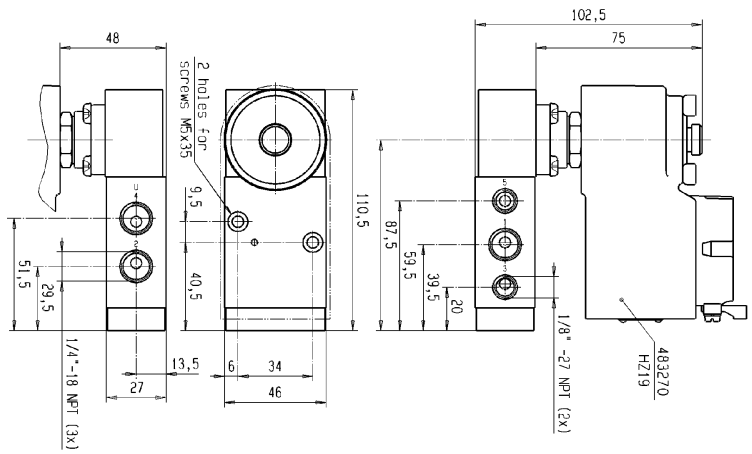

Dimension reference 7551

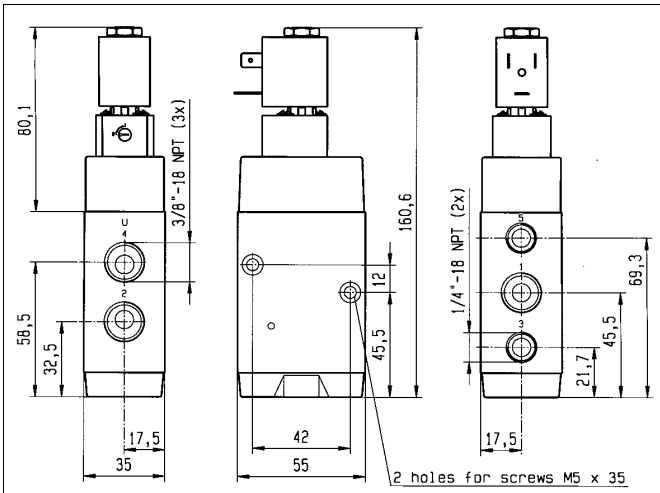

Dimension reference 7578

Parker Lucifer SA
Fluid Control Division Europe
CH-1227 Carouge-Genève

316L Stainless Steel valves for actuator control - 5/2 valves - Pipe connection

Port size	Orifice (mm)	Flow factors (L/min	Admissible differential pressure bar			Fluid temp. °C		Seat disc	Reference numbers			OR	Power consumption (W)		Wt. (g)	El. Part Group *	Dim ref.
			Min	Max													
NPT		Qn		DC	AC	Min	Max		Global valve reference	Valve reference no.	Housing	Coil	DC	AC			

Pilot operated

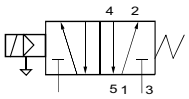

316L Stainless Steel body/Pipe mounting

3/8 - 1/4	8	1400	2	10	10	-25	80	NBR	7341PRN3NN00	**U341P3250** [1]	**NL**	**481865**	9	8	-	2	7558
	8	1400	2	10	10	-25	80	NBR			**E0**	**481000**	8	8	-	2	
	8	1400	2	10	10	-25	80	NBR	7341PRN3NN92	**U341P3292** [1]	**NL**	**483580.01**	0.4	-	-	7	7560
	8	1400	2	10	10	-25	75	NBR	7341PRN3NN95	**U341P3295** [1]	**-**	**492965.01**	0.8	-	-	10	7561
	8	1400	2	10	10	-25	75	NBR			**-**	**492310**	6	6	-	10	

Table continued on page 302

Notes:

* See Electrical Parts Group table at end of section

1. Valve with NPT ports

Parker Lucifer SA
Fluid Control Division Europe
CH-1227 Carouge-Genève

Tel: +45 63 12 83 00 | Email: ps@hymatik.com | www.hymatik.com | Hvidkaervej 27a, DK-5250 Odense SV, Denmark

316L Stainless Steel valves for actuator control - 5/2 valves - Pipe connection

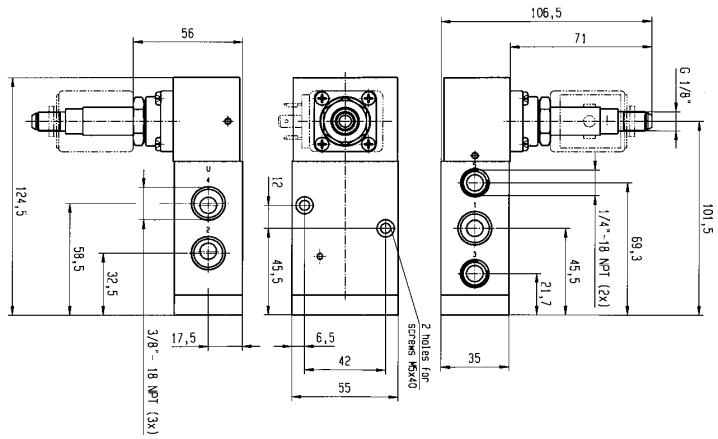

Dimension reference 7558

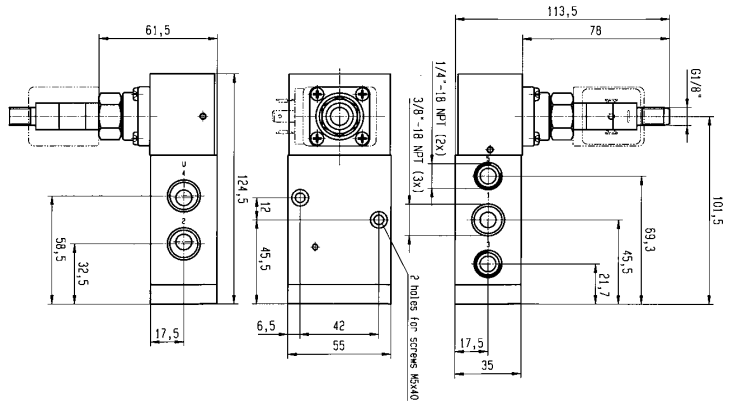

Dimension reference 7560

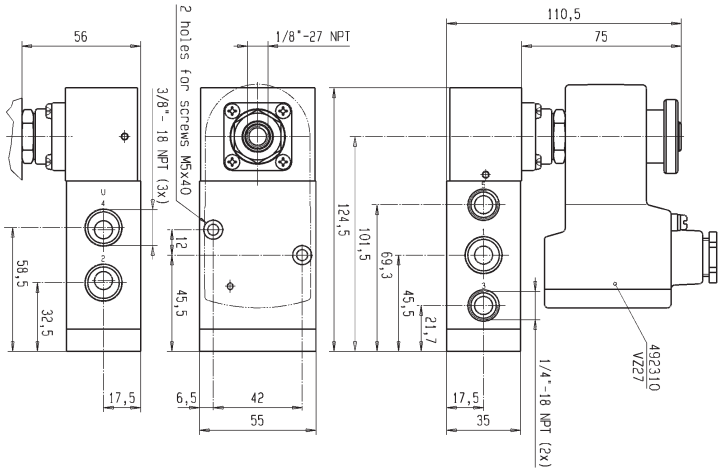

Dimension reference 7561

Parker Lucifer SA
Fluid Control Division Europe
CH-1227 Carouge-Genève

316L Stainless Steel valves for actuator control - 5/2 valves - Pipe connection

Port size NPT	Orifice (mm)	Flow factors (L/min Qn	Admissible differential pressure bar Min	Max DC	Max AC	Fluid temp. °C Min	Fluid temp. °C Max	Seat disc	Reference numbers Global valve reference	Valve reference no.	Housing	OR Coil	Power consumption (W) DC	Power consumption (W) AC	Wt. (g)	El. Part Group *	Dim ref.
Pilot operated																	
3/8 - 1/4	8	1400	2	10	10	-10	80	NBR	7341PRN3NN9D	**U341P32951D**	**-**	**483270**	8	8	-	11	7562
	8	1400	2	10	10	-10	80	NBR			**-**	**483270.02**	8	8	-	11	
Pilot operated with external pressure supply																	
3/8 - 1/4	8	1400	2	10	10	-25	80	NBR	7441PRN3NN00	**U441P3250** 1	**NL**	**481865**	9	8	-	2	7565
	8	1400	2	10	10	-25	80	NBR			**E0**	**481000**	8	8	-	2	
External pressure supply																	
3/8 - 1/4	8	1400	2	10	10	-25	80	NBR	7541PRN3NNM1	**U541P0250** 1	-	-	-	-	-		7566

316L Stainless Steel body/Pipe mounting

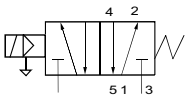

316L Stainless Steel body/Pipe mounting

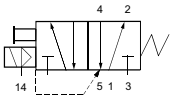

316L Stainless Steel body/Pipe mounting

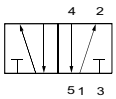

Table continued on page 304

Notes:

* See Electrical Parts Group table at end of section

1. Valve with NPT ports

Parker Lucifer SA
Fluid Control Division Europe
CH-1227 Carouge-Genève

Tel: +45 63 12 83 00 | Email: ps@hymatik.com | www.hymatik.com | Hvidkaervej 27a, DK-5250 Odense SV, Denmark

316L Stainless Steel valves for actuator control - 5/2 valves - Pipe connection

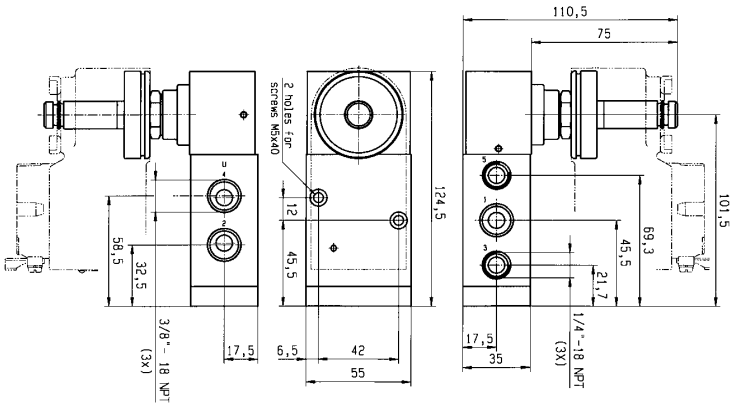

Dimension reference 7562

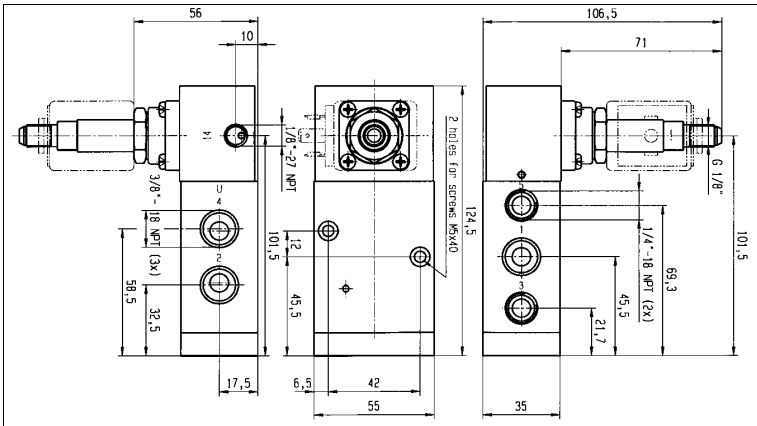

Dimension reference 7565

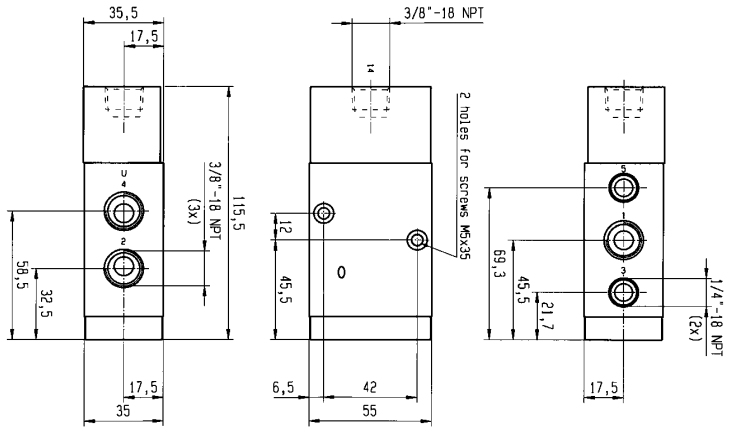

Dimension reference 7566

Parker Lucifer SA
Fluid Control Division Europe
CH-1227 Carouge-Genève

316L Stainless Steel valves for actuator control - 5/2 valves - Pipe connection

Port size	Orifice (mm)	Flow factors (L/min	Admissible differential pressure bar			Fluid temp. °C		Seat disc	Reference numbers			OR	Power consumption (W)		Wt. (g)	El. Part Group *	Dim ref.
			Min	Max													
NPT		Qn		DC	AC	Min	Max		Global valve reference	Valve reference no.	Housing	Coil	DC	AC			

Two solenoids and main pressure supply

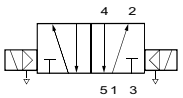

316L Stainless Steel body/Pipe mounting

1/4 - 1/8	4	600	2	10	10	-25	80	NBR	7347PRN2JN00	**U347P3150** 1	**NL**	**481865**	9	8	-	2	7552
	4	600	2	10	10	-25	80	NBR			**E0**	**481000**	8	8	-	2	
	4	600	2	10	10	-25	65	NBR	7347PRN2JN95	**U347P3195** 1	**-**	**492965.01**	0.8	-	-	10	7553
	4	600	2	10	10	-25	75	NBR			**-**	**492310**	6	6	-	10	
3/8 - 1/4	8	1400	2	10	10	-25	80	NBR	7347PRN3NN00	**U347P3250** 1	**NL**	**481865**	9	8	-	2	7563
	8	1400	2	10	10	-25	80	NBR			**E0**	**481000**	8	8	-	2	

Table continued on page 306

Notes:

* See Electrical Parts Group table at end of section

1. Valve with NPT ports

Parker Lucifer SA
Fluid Control Division Europe
CH-1227 Carouge-Genève

Tel: +45 63 12 83 00 | Email: ps@hymatik.com | www.hymatik.com | Hvidkaervej 27a, DK-5250 Odense SV, Denmark

316L Stainless Steel valves for actuator control - 5/2 valves - Pipe connection

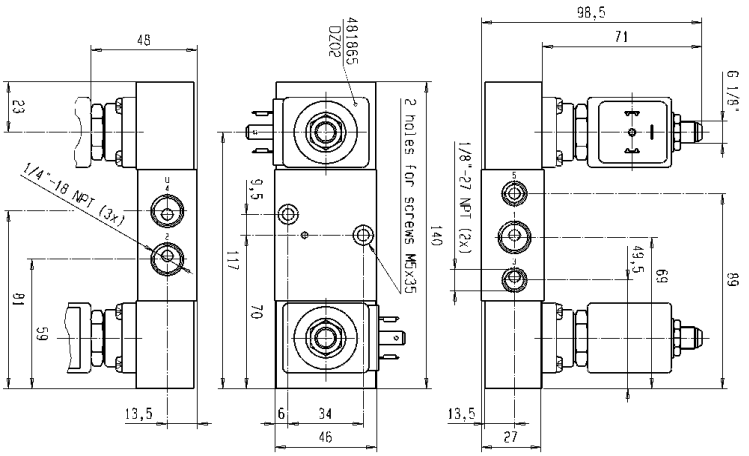

Dimension reference 7552

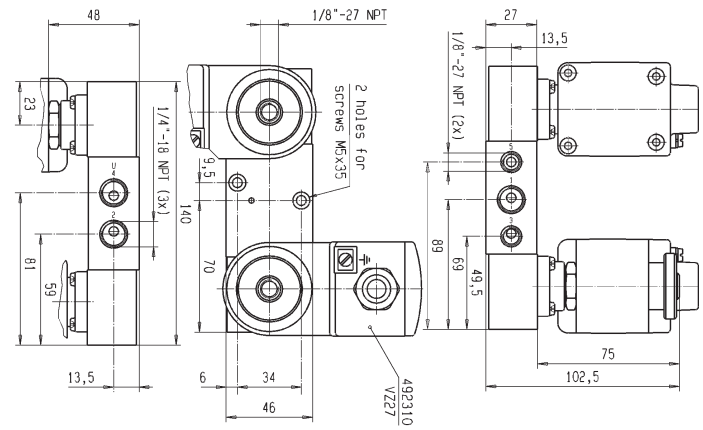

Dimension reference 7553

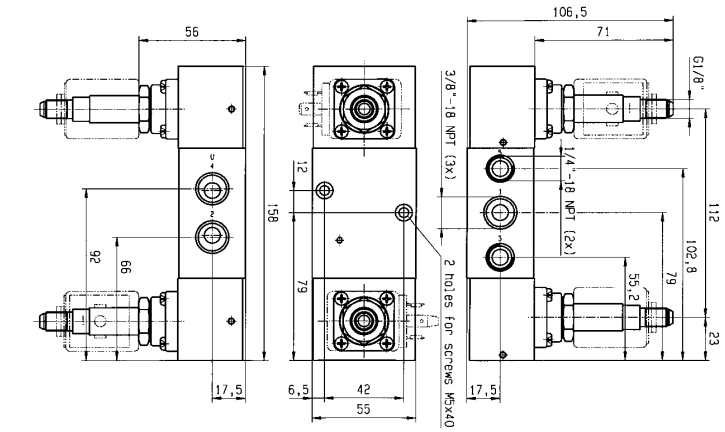

Dimension reference 7563

Parker Lucifer SA
Fluid Control Division Europe
CH-1227 Carouge-Genève

316L Stainless Steel valves for actuator control - 5/2 valves - Pipe connection

Port size	Orifice (mm)	Flow factors (L/min	Admissible differential pressure bar			Fluid temp. °C		Seat disc	Reference numbers			OR	Power consumption (W)		Wt. (g)	El. Part Group *	Dim ref.
			Min	Max													
NPT		Qn		DC	AC	Min	Max		Global valve reference	Valve reference no.	Housing	Coil	DC	AC			

Two solenoids and main pressure supply

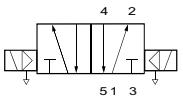

316L Stainless Steel body/Pipe mounting

3/8 - 1/4	8	1400	2	10	10	-25	75	NBR	7347PRN3NN95	**U347P3295** [1]	-	**492965.01**	0.8	-	-	10	7564
	8	1400	2	10	10	-25	75	NBR			-	**492310**	6	6	-	10	

Notes:

* See Electrical Parts Group table at end of section

1. Valve with NPT ports

Parker Lucifer SA
Fluid Control Division Europe
CH-1227 Carouge-Genève

Tel: +45 63 12 83 00 | Email: ps@hymatik.com | www.hymatik.com | Hvidkaervej 27a, DK-5250 Odense SV, Denmark

316L Stainless Steel valves for actuator control - 5/2 valves - Pipe connection

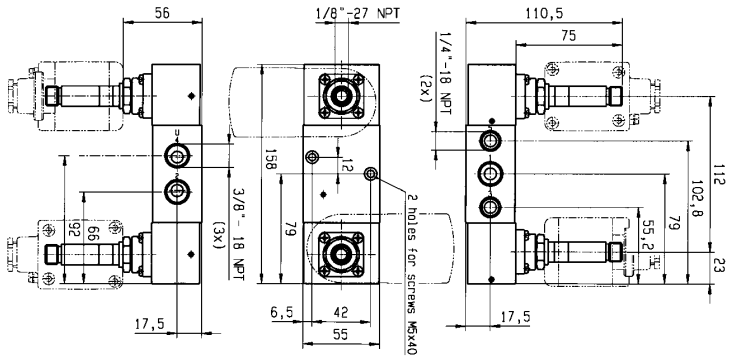

Dimension reference 7564

Parker Lucifer SA
Fluid Control Division Europe
CH-1227 Carouge-Genève

Tel: +45 63 12 83 00 | Email: ps@hymatik.com | www.hymatik.com | Hvidkaervej 27a, DK-5250 Odense SV, Denmark

316L St. Steel valves for actuator control

3/2
5/2

Applications

Directional control and fail/safe function in valve actuator circuits in corrosive and hazardous environment.

Solenoid pilots for main stage valves in corrosive and hazardous locations.

Port size NPT	Orifice (mm)	Flow factors (L/min Qn	Admissible differential pressure bar Min	Max DC	Max AC	Fluid temp. °C Min	Fluid temp. °C Max	Seat disc	Reference numbers Global valve reference	Valve reference no.	Housing	OR Coil	Power consumption (W) DC	Power consumption (W) AC	Wt. (g)	El. Part Group *	Dim ref.
Pilot operated - Integrated pilot																	
316L Stainless Steel body/NAMUR interface																	
1/4 - 1/8	4	600	2	10	10	-25	80	NBR	2341NRKDJNM1	**U341N0150** 1	**A2**	**488980** 2	2.5	2	-	1	7575
Pilot operated																	
316L Stainless Steel body/NAMUR interface																	
1/4 - 1/8	4	600	2	10	10	-25	75	NBR	7341NRKDJN00	**U341N3150** 2	**NL**	**481865**	9	8	-	2	7542
	4	600	2	10	10	-25	75	NBR			**E0**	**481000**	8	8	-	2	
	4	600	2	10	10	-25	80	NBR	7341NRKDJN1D	**U341N31501D** 2	**-**	**483250**	8	8	-	5	7543

Table continued on page 310

Notes:

* See Electrical Parts Group table at end of section

1. Manual override standard
2. Valve with NPT ports

Parker Lucifer SA
Fluid Control Division Europe
CH-1227 Carouge-Genève

Tel: +45 63 12 83 00 | Email: ps@hymatik.com | www.hymatik.com | Hvidkaervej 27a, DK-5250 Odense SV, Denmark

316L Stainless Steel valves for actuator control - 3/2 or 5/2 valves - NAMUR interface

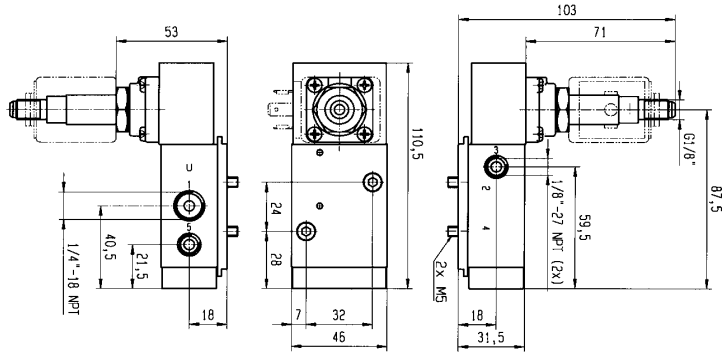

Dimension reference 7542

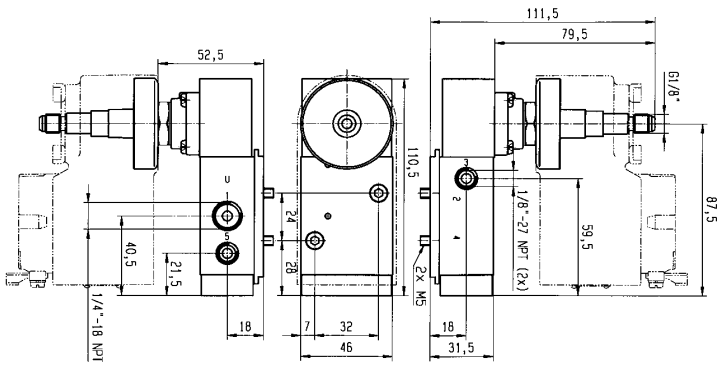

Dimension reference 7543

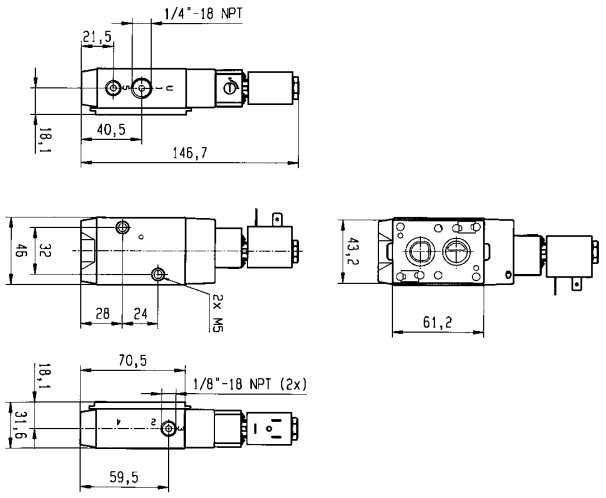

Dimension reference 7575

Parker Lucifer SA
Fluid Control Division Europe
CH-1227 Carouge-Genève

316L Stainless Steel valves for actuator control - 3/2 or 5/2 valves - NAMUR interface

Port size	Orifice (mm)	Flow factors (L/min	Admissible differential pressure bar			Fluid temp. °C		Seat disc	Reference numbers			OR	Power consumption (W)		Wt. (g)	El. Part Group *	Dim ref.
			Min	Max													
NPT		Qn		DC	AC	Min	Max		Global valve reference	Valve reference no.	Housing	Coil	DC	AC			
Pilot operated																	
1/4 - 1/8	4	600	2	10	10	-25	80	NBR	7341NRKDJN92	**U341N3192** [1]	**NL**	**483580.01**	0.4	-	-	7	7544
	4	600	2	10	10	-25	75	NBR	7341NRKDJN95	**U341N3195** [1]	**-**	**492965.01**	0.8	-	-	10	7696
	4	600	2	10	10	-25	75	NBR			**-**	**492310**	6	6	-	10	

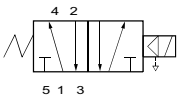

316L Stainless Steel body/NAMUR interface

3/8 - 1/4	8	1400	2	10	10	-25	80	NBR	2341NRKNNNM1	**U341N0250**	**A2**	**488980**	2.5	2	-	1	7577

Pilot operated - Integrated pilot

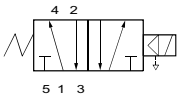

316L Stainless Steel body/NAMUR interface

Table continued on page 312

Notes:

* See Electrical Parts Group table at end of section

1. Valve with NPT ports

Parker Lucifer SA
Fluid Control Division Europe
CH-1227 Carouge-Genève

Tel: +45 63 12 83 00 | Email: ps@hymatik.com | www.hymatik.com | Hvidkaervej 27a, DK-5250 Odense SV, Denmark

316L Stainless Steel valves for actuator control - 3/2 or 5/2 valves - NAMUR interface

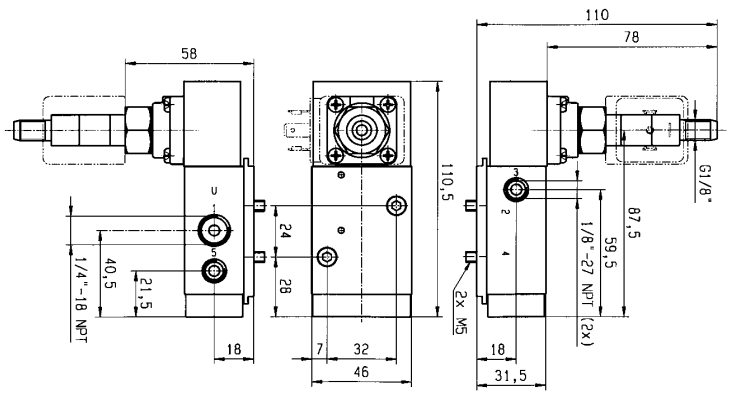

Dimension reference 7544

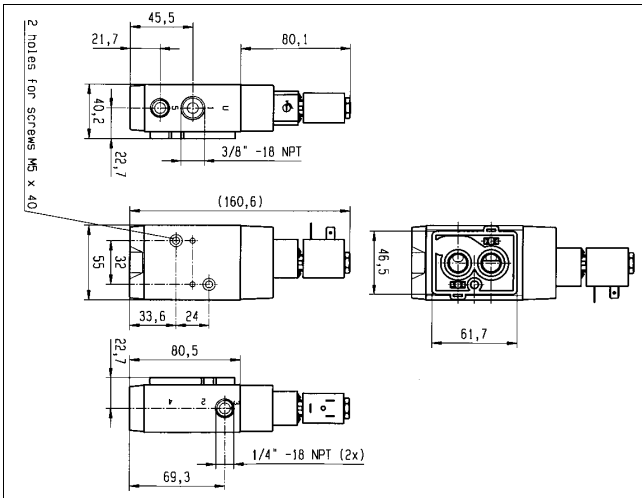

Dimension reference 7577

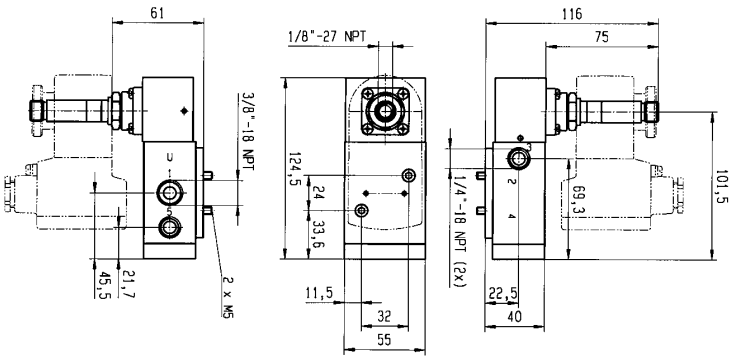

Dimension reference 7696

Parker Lucifer SA
Fluid Control Division Europe
CH-1227 Carouge-Genève

316L Stainless Steel valves for actuator control - 3/2 or 5/2 valves - NAMUR interface

Port size	Orifice (mm)	Flow factors (L/min	Admissible differential pressure bar			Fluid temp. °C		Seat disc	Reference numbers			OR	Power consumption (W)		Wt. (g)	El. Part Group *	Dim ref.
			Min	Max													
NPT		Qn		DC	AC	Min	Max		Global valve reference	Valve reference no.	Housing	Coil	DC	AC			

Pilot operated

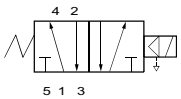

316L Stainless Steel body/NAMUR interface

3/8 - 1/4	8	1400	2	10	10	-25	80	NBR	7341NRKNNN00	**U341N3250** [1]	**NL**	**481865**	9	8	-	2	7554
	8	1400	2	10	10	-25	80	NBR			**E0**	**481000**	8	8	-	2	
	8	1400	2	10	10	-25	55	NBR	7341NRKNNN92	**U341N3292** [1]	**NL**	**483580.01**	0.4	-	-	7	7556
	8	1400	2	10	10	-25	75	NBR	7341NRKNNN95	**U341N3295** [1]	**-**	**492965.01**	0.8	-	-	10	7695
	8	1400	2	10	10	-25	75	NBR			**-**	**492310**	6	6	-	10	

Table continued on page 314

Notes:

* See Electrical Parts Group table at end of section

1. Valve with NPT ports

Parker Lucifer SA
Fluid Control Division Europe
CH-1227 Carouge-Genève

Tel: +45 63 12 83 00 | Email: ps@hymatik.com | www.hymatik.com | Hvidkaervej 27a, DK-5250 Odense SV, Denmark

316L Stainless Steel valves for actuator control - 3/2 or 5/2 valves - NAMUR interface

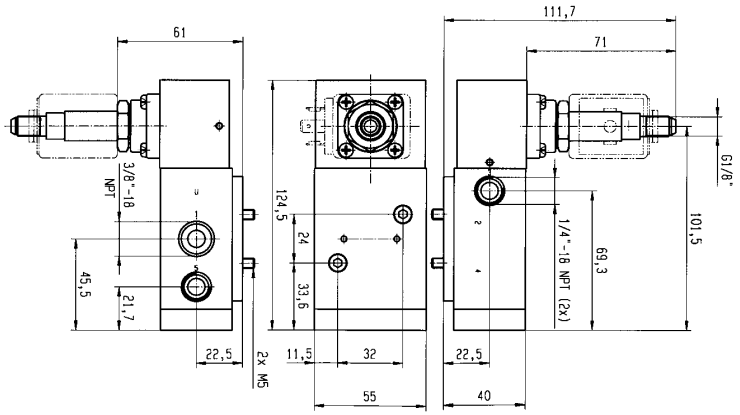



Dimension reference 7554

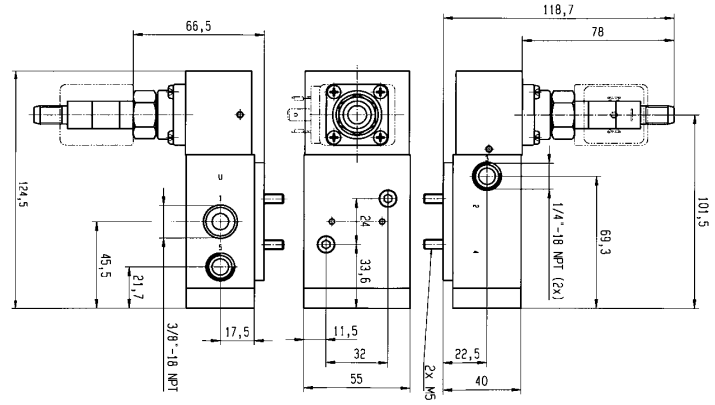

Dimension reference 7556

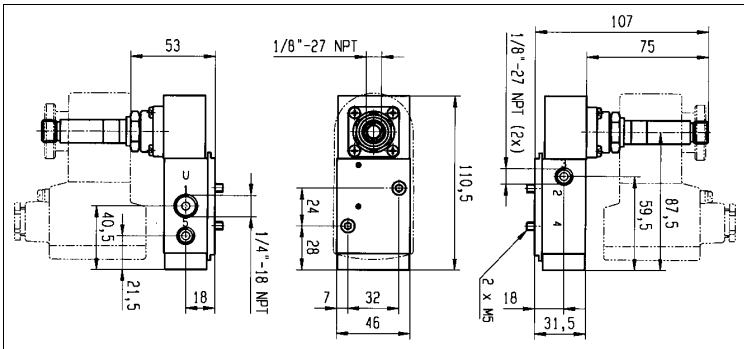

Dimension reference 7695

Parker Lucifer SA
Fluid Control Division Europe
CH-1227 Carouge-Genève

316L Stainless Steel valves for actuator control - 3/2 or 5/2 valves - NAMUR interface

Port size	Orifice (mm)	Flow factors (L/min	Admissible differential pressure bar			Fluid temp. °C		Seat disc	Reference numbers			OR	Power consumption (W)		Wt. (g)	El. Part Group *	Dim ref.
			Min	Max													
NPT		Qn		DC	AC	Min	Max		Global valve reference	Valve reference no.	Housing	Coil	DC	AC			

Two solenoids and main pressure supply

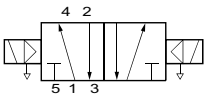

316L Stainless Steel body/NAMUR interface

1/4 - 1/8	4	400	2	10	10	-25	80	NBR	7347NRKDHNM0	**U347N3150** 1	**NL**	**481865** 2	9	8	-	2	7545
	4	400	2	10	10	-25	80	NBR			**E0**	**481000** 2	8	8	-	2	
	4	400	2	10	10	-25	55	NBR	7347NRKDHN92	**U347N3192** 1	**NL**	**483580.01** 2	0.4	-	-	7	7546
3/8 - 1/4	8	1400	2	10	10	-25	80	NBR	7347NRKNNN00	**U347N3250** 1	**NL**	**481865**	9	8	-	2	7557
	8	1400	2	10	10	-25	80	NBR			**E0**	**481000**	8	8	-	2	

Notes:

* See Electrical Parts Group table at end of section

1. Valve with NPT ports
2. Please order two housings and coils for each valve

Parker Lucifer SA
Fluid Control Division Europe
CH-1227 Carouge-Genève

316L Stainless Steel valves for actuator control - 3/2 or 5/2 valves - NAMUR interface

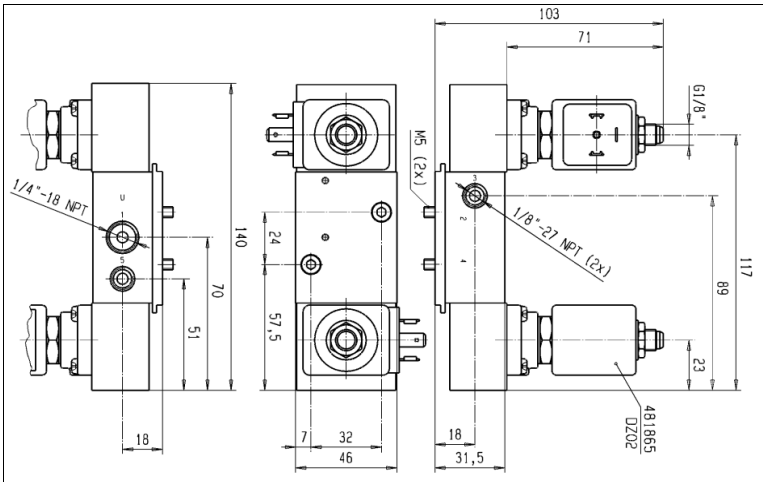

Dimension reference 7545

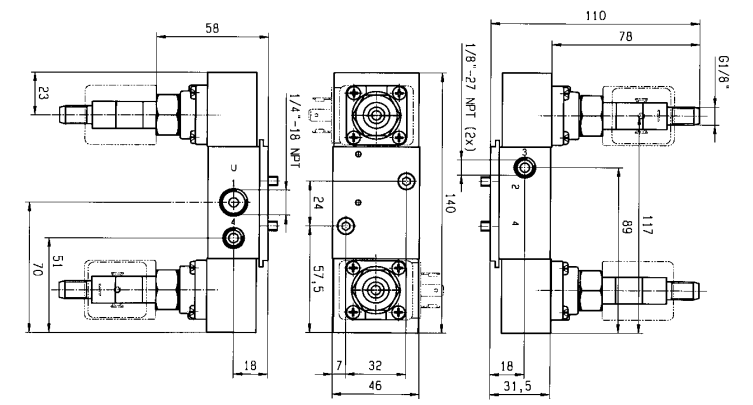

Dimension reference 7546

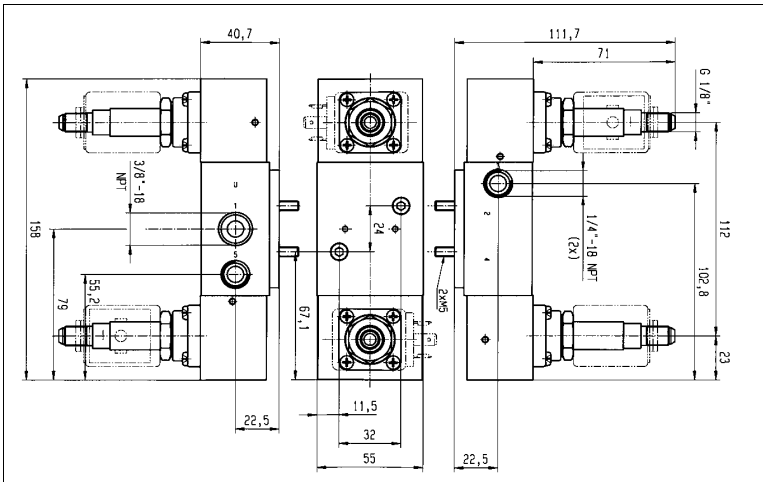

Dimension reference 7557

Parker Lucifer SA
Fluid Control Division Europe
CH-1227 Carouge-Genève

Tel: +45 63 12 83 00 | Email: ps@hymatik.com | www.hymatik.com | Hvidkaervej 27a, DK-5250 Odense SV, Denmark

Electrical parts options with 3/2-5/2 - 316L Stainless steel valves for pneumatic actuator control

El.part Group	Coil	Protection class	Protection class / Temperature class	Power DC	Power AC	Coil Order No.	Coil Ref. No.	Connection	Housing Order No.	Housing Ref. No.	Ambient temp. min.	Ambient temp. max.
1	22 mm	IP65	**Class F**	2.5	2	DA01	**488980**	for DIN B plug	A2	**8993**	-40	50
		IP65	**Class F**	2.5	2	DA02	**481045**	with DIN B plug	A2	**8993**	-40	50
		IP65	**EEx m II T5**	2.5	2	VA12	**482606.10**	with 1500mm cable	00	-	-40	50
2	32 mm (Std)	IP65	**Class F**	9	8	DZ02	**481865**	for DIN A plug	NL	**8132**	-40	50
		IP65	**Class F**	9	8	DZ03	**482725**	with DIN A plug	NL	**8132**	-40	50
		IP65	**Class H**	9	8	DZ04	**492453**	for DIN A plug	NL	**8132**	-40	50
		IP65	**Class H**	9	8	DZ05	**492726**	with DIN A plug	NL	**8132**	-40	50
		IP65	**Class F, 50/60 Hz**	-	9	DZ06	**483510**	for DIN A plug	NL	**8132**	-40	50
		IP65	**Class F, 50/60 Hz**	-	9	DZ07	**482635**	with DIN A plug	NL	**8132**	-40	50
		IP65	**EEx m II T4**	9	8	HZ90	**492670.10**	with 3000mm cable	00	-	-25	40
	50 mm (Std)	IP10/IP44	**Class F**	8	8	EZ01	**481000**	screw-terminals	E0	**4270**	-40	50
		IP10/IP44	**Class H**	8	8	EZ02	**485100**	screw-terminals	E0	**4270**	-40	50
		IP67	**Class F, IP 67, M20x1.5**	8	8	EZ01	**481000**	screw-terminals	G1	**4538**	-40	50
		IP65	**EEx m II T4/T5**	9	8	VZ01	**492070**	with 1500mm cable	00	-	-40	40/65
		IP67	**EEx me II T4**	8	8	HZ06	**483371**	for cable connection	00	-	-40	65
		IP66	**EEx me II T3/T4**	11	9	VZ90	**492190.10**	for cable connection	00	-	-40	75/40
		IP67	**EEx me II T3/T4**	8	8	HZ23	**494040**	for cable connection	00	-	-40	90/65
		IP65	**EEx md IIC T4/T5**	8	8	HZ09	**493640**	with 1500mm cable	00	-	-40	75/40
5	50 mm	IP54	**EEx d IIC T4/T5/T6**	8	8	HZ08	**483250**	for cable, 1/2 NPT	00	-	-40	80/75/60
7	32 mm I.S.	IP65	**EEx ia II C T6**	0.4	-	DZ12	**483580.01**	for DIN A plug	NL	**8132**	-40	55
		IP65	**EEx ia II C T6**	0.4	-	DZ13	**483960.01**	with DIN A plug	NL	**8132**	-40	55
	50 mm I.S.	IP66	**EEx ia II C T6**	0.4	-	VZ93	**494035.10**	for cable connection	00	-	-40	65
		IP67	**EEx ia II C T6**	0.4	-	VZ08	**488660.01**	with 2000mm cable	00	-	-40	65
		IP65	**EEx ia II C T6**	0.4	-	VZ09	**488670.01**	with DIN A plug	00	-	-40	65
9 CPR	32 mm	IP65	**Class F**	9	9	DZ93	**492387**	with DIN A plug	N9	**8886**	-40	50
	50 mm	IP66	**EEx me II T5/T6**	1.5	-	VZ13	**492200**	for cable connection	00	-	-40	75/40
		IP67	**EEx me II T4**	8	-	VZ14	**483371.01**	for cable connection	00	-	-40	65
		IP66	**EEx me II T4/T5**	6	6	VZ15	**492300**	for cable connection	00	-	-40	75/40
		IP67	**EEx m II T4/T5**	5	5	VZ02	**492270**	with 1500mm cable	00	-	-40	65/40
		IP65	**EEx ib IIB T6**	0.8	-	VZ11	**482660**	for cable connection	00	-	-40	75
		IP66	**EEx ib IIC T6**	0.8	-	VZ12	**483330.01**	for cable connection	00	-	-40	75
		IP66	**EEx ia IIC T6**	0.8	-	VZ92	**492965.02**	for cable connection	00	-	-40	65
10 OFFSHORE	50 mm	IP66	**EEx me II T5/T6**	1.5	-	VZ26	**492210**	for cable connection	00	-	-40	75/40
		IP66	**EEx me II T4/T5**	6	6	VZ27	**492310**	for cable connection	00	-	-40	75/40
		IP65	**EEx ib IIB T6**	0.8	-	VZ11	**482660**	for cable connection	00	-	-40	75
		IP66	**EEx ib IIC T6**	0.8	-	VZ12	**483330.01**	for cable connection	00	-	-40	75
		IP66	**EEx ia IIC T6**	0.8	-	VZ91	**492965.01**	for cable connection	00	-	-40	65
11	50 mm EEx d	IP65	**EEx d II C T4/T5/T6**	8	8	HZ19	**483270**	for cable , M20x1.5	00	-	-40	80/75/60
		IP65	**EEx d II C T4/T5/T6**	8	8	HZ21	**483270.02**	for cable , 1/2 NPT	00	-	-40	80/75/60
12	50 mm	IP66	**EEx me II T4/T5**	6	6	VZ27	**492310**	for cable connection	00	-	-40	75/40
		IP66	**EEx ia IIB T6**	0.8	-	VZ22	**482160.01**	for cable connection	00	-	-40	65
		IP66	**EEx ia IIC T6**	0.8	-	VZ23	**482870.01**	for cable connection	00	-	-40	65

Note: This table is indicative only. Please contact your distributor to confirm your selection.

Parker Lucifer SA
Fluid Control Division Europe
CH-1227 Carouge-Genève

EExPress™

EEx p [ia] m IIC T5
Bus Manifold for
Pneumatic actuator control

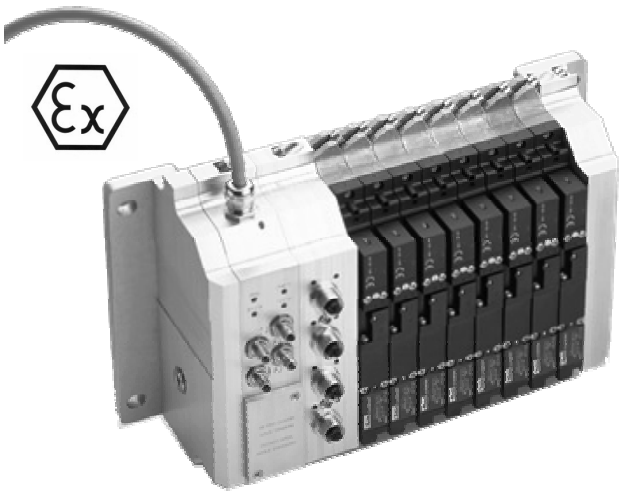

Parker Lucifer has developed industry's first fully integrated fieldbus manifold system – the patented EExPress™ Bus Manifold – for the control of pneumatic actuators in hazardous (Zone 1 and Zone 2) process industry environments like chemical, petrochemical applications. The EExPress™ Bus Manifold is a stackable valve system that fully integrates 5/2 solenoid valves, control electronics and input sensors, a unique feature on the market today, and uses the Profibus DP fieldbus communications protocol – the preferred protocol of the process industries. One bus address can operate up to 32 individual 5/2 modular solenoid valves, or a combination of valves and actuator position sensors.
The concept consists in an "integrated solution" which permits to install the manifold close to the pneumatic actuators - without the need for expensive explosion-proof pressurised cabinets. The **EEx p [ia] m IIC T5** protection is reached by using a "safety pressure" - the complete block is put under 50 mb safety pressure. This permits a substantial reduction of installation and maintenance costs, a simplification of the electrical connections, the use of Profibus DP and offers increased safety due to separated wiring of communication and power supply.

For more information see brochure 8752/GB

Parker Lucifer SA
Fluid Control Division Europe
CH-1227 Carouge-Genève

Tel: +45 63 12 83 00 | Email: ps@hymatik.com | www.hymatik.com | Hvidkaervej 27a, DK-5250 Odense SV, Denmark

1. PRODUCT INTRODUCTION

The EExPress™ bus Manifold is a patented stackable system composed of:

- 1 x End plates Kit
- X x Solenoid valve module
- X x Input sensor module
- 1 x Gateway

The EExPress™ Explosion-proof manifold 5/2 valve island design uses the **EEx [ia] pm protection.**

Up to 32 valves per island require one bus address only.

The system includes a bus part satisfying the intrinsic safety requirements and communicating directly with a master control unit by using the Profibus DP protocol.

The manifold assembly and the dedicated power supply are coping with the "p" protection. The galvanic separation between the EEx ia zone and the EEx p is assured by opto-coupler and by a transformer.

The valve coils are coping with the ìmî protection.

2. APPLICATIONS

This smart EExPress™ bus manifold package has been designed for the control of pneumatic actuators in Process Industries with **hazardous environments Zone 1 or Zone 2** such as:

- Ghemical & Pharmaceutical.
- Gas and solvant handling
- Powder transportation.
- Refining.
- Etc.

These high demanding markets are concerned with:

- Process & people safety
- Plant installation simplification
- Process productivity
- Friendly use product
- Partners support



Parker Lucifer SA
Fluid Control Division Europe
CH-1227 Carouge-Genève

Tel: +45 63 12 83 00 | Email: ps@hymatik.com | www.hymatik.com | Hvidkaervej 27a, DK-5250 Odense SV, Denmark

3. PRODUCT CONFIGURATION

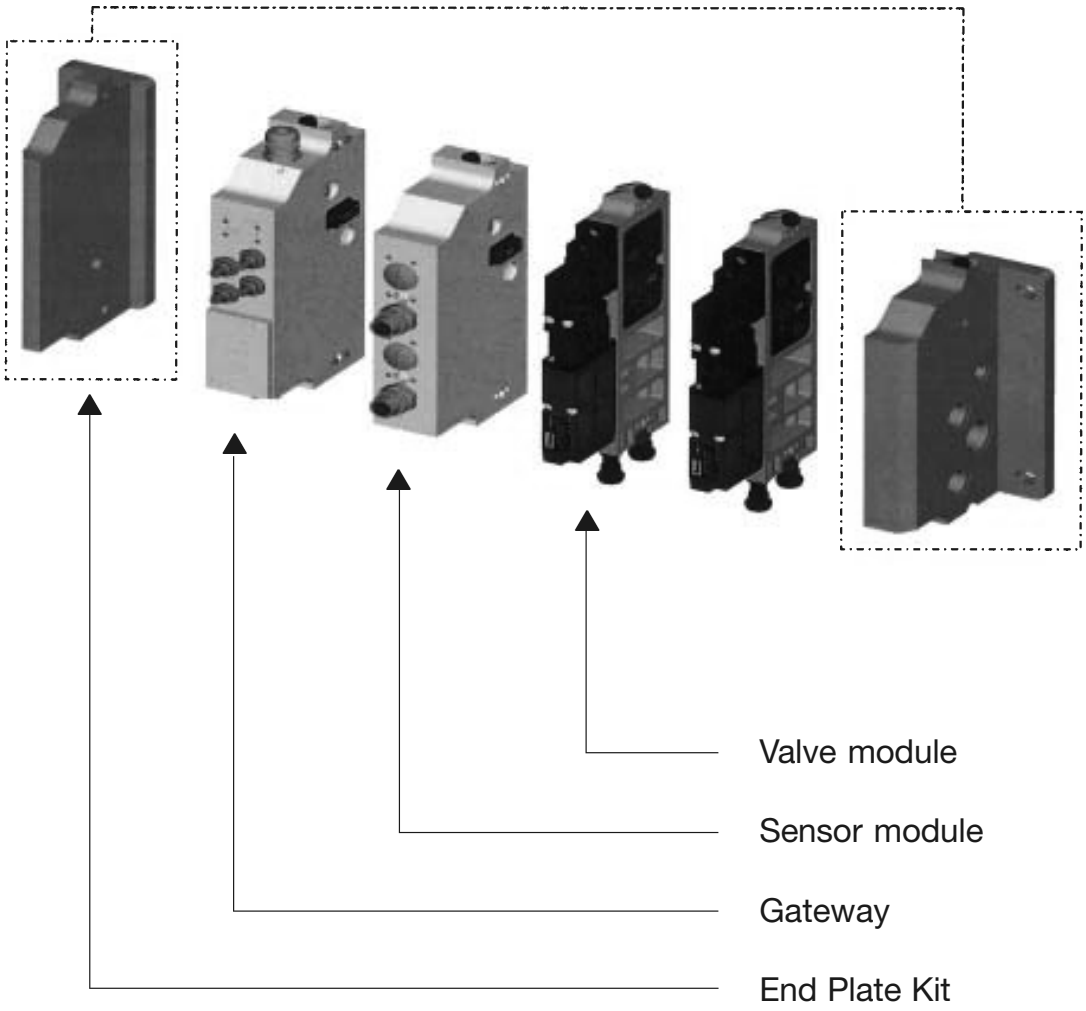



Parker Lucifer SA
Fluid Control Division Europe
CH-1227 Carouge-Genève

Tel: +45 63 12 83 00 | Email: ps@hymatik.com | www.hymatik.com | Hvidkaervej 27a, DK-5250 Odense SV, Denmark

5. PRODUCT OPERATING PRINCIPLE

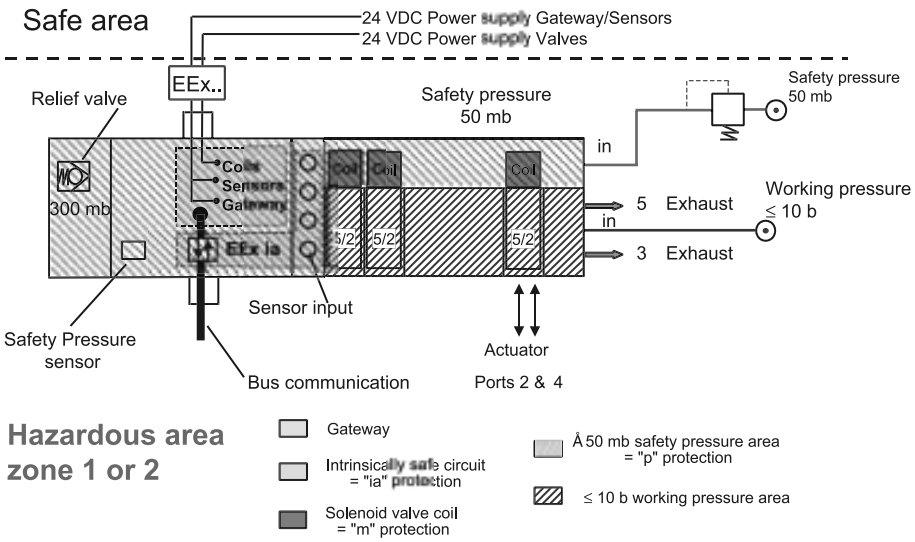

Power supply

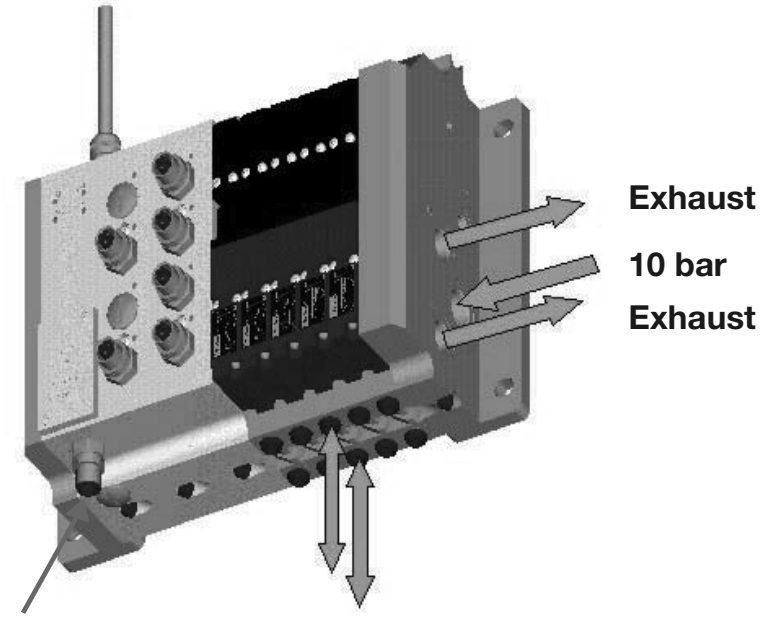



Parker Lucifer SA
Fluid Control Division Europe
CH-1227 Carouge-Genève

Tel: +45 63 12 83 00 | Email: ps@hymatik.com | www.hymatik.com | Hvidkaervej 27a, DK-5250 Odense SV, Denmark

HOW TO ORDER ASSEMBLED MANIFOLDS

21.2 Choose the components for 1 manifold in the following order:

1 - Plate kit **N.B. One** plate kit only per manifold			
End plate A	*Pressure supply plate B*	*Order No.*	*Qty*
BSP	BSP	495190	1
2 - Gateway selection **N.B. One** gateway only per manifold			
Protocol	*Communication link*	*Order No.*	*Qty*
Profibus DP	Copper (1 connector)	495176	1
Profibus DP	Copper (1 connectors + 1 repeater)	495275	1
Profibus DP	Optical fibre	493972	1
3 - Sensor modules **N.B.** 0 up to 8 sensor modules per manifold			
Nb of connectors	*Connection*	*ON/OFF*	*Order No.*	*Qty**
2x IN connectors	M 12	x	495141	0 to 8
4x IN connectors	M 12	x	495142	0 to 8
4 - Valve modules **N.B.** 0 up to 32 valve modules per manifold			*Order No.*	*Qty*
Module with 5/2 valves			494237	0 to 32

*** Warning:** For one bus address, the combination sensor module + valve module has to fit the following formula: *4× (Number of sensor modules with 2× IN connectors + Number of sensor modules with 4× IN connectors) + Number of valve modules < 32.*

21.3 Example of manifold configuration and order:

Description	**Order No. chosen**	**Qty per Manifold chosen**
Plate Kit	495190	1
Gateway	495176	1
Sensor module – 2 IN connectors	495141	4
Sensor module – 4 IN connectors	–	–
Valve module	494237	8

Order: 5 manifold with above mentioned components.
The selected components will be supplied as an assembled manifold.
A – The label on the manifold shows:
1. The LCIE conformity for the EEx ia pm protection.
2. The LCIE approval code: EM followed by a manufacturing code. I.e. **EM 12345**

B – Each manufacturing code defines a specific manifold configuration
C – The **EM XXXXX** is also mentioned on the shipping bulletin and on the invoice
D – To simplify, customers can re-order the same manifold by using the **EM XXXXX** code mentioned on these documents.

Parker Lucifer SA
Fluid Control Division Europe
CH-1227 Carouge-Genève

Tel: +45 63 12 83 00 | Email: ps@hymatik.com | www.hymatik.com | Hvidkaervej 27a, DK-5250 Odense SV, Denmark

Parker Lucifer SA
Fluid Control Division Europe
CH-1227 Carouge-Genève

Electropneumatic pressure regulator EPP3 Series

	Page
Electropneumatic pressure regular EPP3	324
EP - Transducer.	326
Electropneumatic pressure regulator EPP3 -High Flow Series.	328

The product
A range of electropneumatic pressure regulators (G 1/8, G 1/4 and G 1/2) which, by means of an integrated electronic control system and pulse width modulated solenoid valve, controls the output pressure proportional to an analogue or digital electrical signal. A high precision is achieved by means of internal feedback through an integrated pressure sensor.

Applications
Pressure control independent of flow in electropneumatic control systems, in particular for the following industries:
-Robotics: welding, painting lines etc.
-Paper and printing: tension regulations, speed and brake control for rolls
-Machine Tools: Plastic moulding, laser welding, presses, polishing etc.
-Trucks and Trains: control of adaptive suspensions.

Benefits
-More flexibility of the controls
-Very fast response times
-Excellent linearity and hysteresis
-No air consumption in rest position
-Increase of productivity (performance, Quality, reliability)
-Direct interface to programmable controllers.

Parker Lucifer SA
Fluid Control Division Europe
CH-1227 Carouge-Genève

Tel: +45 63 12 83 00 | Email: ps@hymatik.com | www.hymatik.com | Hvidkaervej 27a, DK-5250 Odense SV, Denmark

Electropneumatic pressure regulator

EPP3 Series

TECHNICAL DATA

Fluid
Lubricated or non lubricated air and neutral gases recommended filtration : 25-50 µ

Temperature range:
Ambient 0 to 50°C.
Fluid 0 to 50°C.

Inlet pressure range:
1 to 12 bar (the inlet pressure must always be at least 1 bar above the regulated pressure value).

Outlet pressure range:
0.2 to 10 bar

Hysteresis:
~100 mbar. (Factory set up)

Linearity:
1% f.s.o.

Air consumption at constant control signal:
0.

Supply voltage:
24 V DC ± 15% (Max. ripple 1 V)

Power consumption:
Max. 6 W with 24 V DC and constant changes of the control signal ;< 1W without change of control signal

Control signal:
Analog 0 - 10 V Impedance: 10 k Ω
Analog 4 - 20 mA Impedance: 0.5 k Ω

Outlet sensor signal:
A) proportional pressure outlet signal 0-10 V from integrated sensor (recomended load resistance 10 k Ω)
B) proportional pressure outlet signal 4-20 mA from integrated sensor (recommended load resistance 0.5 k Ω)
C) "Alarm" output signal 0/24 V with adjustable triggering level. (Difference between control signal and sensor pressure signal) (Imax. = 40 mA)
- factory set up: diff. signal = ± 0.8 V to ± 1 V
- possible set up: diff. signal = ± 0.1 V to ± 5 V
To neutralize the alarm output signal during the control signal changes, the use of a synchronized time lag relay is required.

Indicative response time:
With a volume of 330 cm^3 at the outlet of the regulator.

Filling :	2 to 4 bar	-	2 to 8 bar
Step response:	~60 ms	-	~120 ms
Emptying:	4 to 2 bar	-	8 to 2 bar
Step response:	~70 ms	-	~130 ms

Safety position:
In case of control failure or if it is less than 1% of its full scale value, the regulated pressure drops automatically to 0 bar (atmospheric pressure). In case of voltage suply failure, the regulated pressure will be kept constant (with eventual discrepancy due to loss of pressure in the servo-chamber).

Electrical connection:
4 screw terminals under the protection cover with Pg 13.5 cable gland or through DIN 43651 connector (6 P + E).

Life expectancy:
> 50 Mio changes of control signal steps.
Attention: It is compulsory to set the control signal at 0 V or 4 mA each time the air pressure supply is turned off (during the night or the weekend). When the air pressure supply cannot be fully exhausted, it is necessary to assure that the deviation between the control value and the inlet pressure remains smaller than 1 bar.

Mounting position:
Indifferent (recommended position: upright; electronic part on top).

Resistance to vibrations:
30 g in all directions

Degree of protection:
IP 65.

External sensors:
All pressure sensors with following characteristics are compatible with the EP-transducer
Sensitivity: 0.5 V/bar up to 10 V/bar
Zero offset: -3 V/bar to 10 V/bar

Assembly:
Silicone free

Electromagnetic compatibility:
in accordance with IEC 801-4 part 4 standards.

Installation and setting instructions:
see publication MI-9202 and appendix supplied with the product.

Please ask for the special technical specification sheet No. 8677 for more details.

SUMMARY OF TYPES

		Connection G	With integrated pressure sensor	Entry options for external sensor signal		Outlet signal options			Electrical connection	
				Feedback signal 0-10 V	Feedback signal 4-20 mA	without	0 - 10 V 4 - 20 mA	0 - 10 V 0/24 alarm	DIN 43651 connector	Cable gland Pg. 13.5
EPP3JC	21 U/I 100 10	1/4	•			•				•
	21 U/I 600 10	1/4	•				•		•	
	21 U/I 700 10	1/4	•					•	•	
EPP3JC	23 U/I 130 10	1/4		•		•			•	
	24 U/I 130 10	1/4			•	•			•	
EPP3JC	41 U/I 100 10	1/2	•			•				•
	41 U/I 600 10	1/2	•				•		•	
	41 U/I 700 10	1/2	•					•	•	
EPP3JC	43 U/I 130 10	1/2		•		•			•	
	44 U/I 130 10	1/2			•	•			•	

Parker Lucifer SA
Fluid Control Division Europe
CH-1227 Carouge-Genève

FLOW DATA
Outlet Pressure in Function of Flow at Constant Control Signal (P1 = 10 bar)

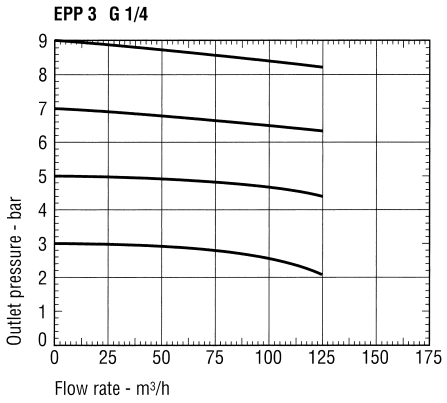

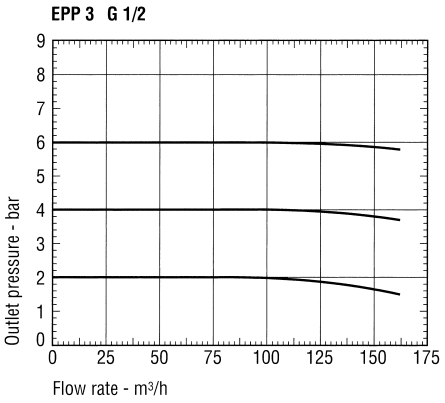

HYSTERESIS DIAGRAM

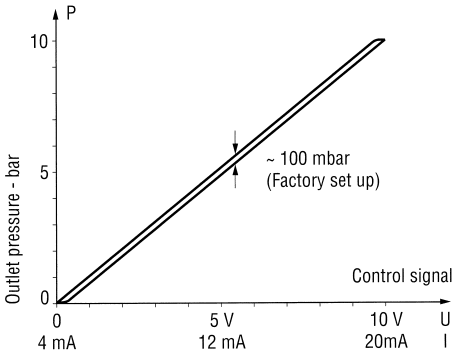

EPP3JC…130/600/700… with
DIN circular plug-in connection
6 P + E (connector included)

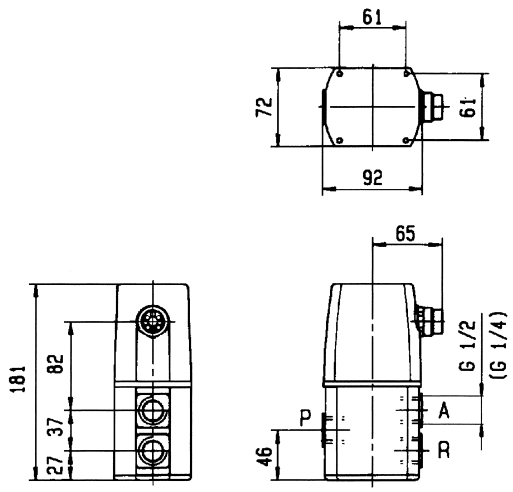



Parker Lucifer SA
Fluid Control Division Europe
CH-1227 Carouge-Genève

Tel: +45 63 12 83 00 | Email: ps@hymatik.com | www.hymatik.com | Hvidkaervej 27a, DK-5250 Odense SV, Denmark

EP-Transducer

EPP3 Series

TECHNICAL DATA

Fluid:
Lubricated or non lubricated air and neutral gases recommended filtration : 25-50 µ

Temperature range:
Ambient 0 to 50°C
Fluid 0 to 50°C

Inlet pressure range:
G 1/8 - 1 to 10 bar
G 1/4 - 1 to 7 bar

Outlet pressure range:
G 1/8 - 0.2 to 10 bar
G 1/4 - 0.2 to 7 bar

Hysteresis:
~ 50 mbar (Factory set up)

Linearity:
1% f.s.o.

Air consumption at constant control signal:
0

Supply voltage:
24 V DC ± 15% (Max. ripple 1 V)

Power consumption:
G 1/8 - max. 6 W } with 24 V DC and constant
G 1/4 - max. 7 W } changes of the control signal
<1 W without change of control signal

Control signal:
Analog 0 - 10 V Impedance: 10 k Ω
Analog 4 - 20 mA Impedance: 0.5 k Ω

Outlet sensor signal:
For types with output signal module.
Proportional pressure output signal supplied by the pressure sensor.
A) 0-10 V, voltage signal (recomended load resistance 10 k Ω)
B) 4-20 mA, current signal (recommended load resistance 0.5 k Ω)
Voltage and current signal can be received simultaneously. Both are protected against short-circuits
C) "Alarm" output signal 0/24 V (Imax. = 40 mA) with adjustable triggering level. (Difference between control signal and sensor pressure signal)
- factory set up: diff. signal = ± 0.8 V to ± 1 V
- possible set up: diff. signal= ± 0.1 V to ± 5 V
To neutralize the alarm output signal during the control signal changes, the use of a synchronized time lag relay is required.

Indicative response time:
With a volume of 30 cm^3 at the outlet of the EP-transducer

Filling :		2 to 4 bar	-
Emptying :		-	4 to 2 bar
Step response:	G 1/8	~ 100 ms	~120 ms
	G 1/4	~ 70 ms	~100 ms

Conductance C (dm^3/s.bar):
G 1/8 - 0.1
G 1/4 - 0.2

Outlet pressure/Flow rate:
G 1/8 - pressure drop 0.5 bar at 1.0 Nm^3/h (P_1 = 7 bar, P_{out} = 6 bar)
G 1/4 - pressure drop 0.5 bar at 2.1 Nm^3/h (P_1 = 7 bar, P_{out} = 6 bar)

Safety position:
In case of control failure or if it is less than 1% of its full scale value, the regulated pressure drops automatically to 0 bar (atmospheric pressure). In case of voltage supply failure, the regulated pressure will be kept constant

Electrical connection:
4 screw terminals under the protection cover with Pg 13.5 cable gland or through DIN 43651 connector (6 P + E)

Life expectancy:
> 50 Mio changes of control signal steps
Attention: It is compulsory to set the control signal at 0 V or 4 mA each time the air pressure supply is turned off (during the night or the weekend). When the air pressure supply cannot be fully exhausted, it is necessary to assure that the deviation between the control value and the inlet pressure remains smaller than 1 bar.

Mounting position:
Indifferent (recommended position: upright; electronic part on top).

Resistance to vibrations:
30 g in all directions

External sensors:
All pressure sensors with following characteristics are compatible with the EP-transducer
Sensitivity: 0.5 V/bar up to 10 V/bar
Zero offset: -3 V/bar to 10 V/bar

Degree of protection:
IP 65

Electromagnetic compatibility:
In accordance with IEC 801-4 part 4 standards

Installation and setting instructions:
See publication MI-9202 and appendix supplied with the product.

Please ask for the special technical specification sheet No. 8678 for more details.

Parker Lucifer SA
Fluid Control Division Europe
CH-1227 Carouge-Genève

Tel: +45 63 12 83 00 | Email: ps@hymatik.com | www.hymatik.com | Hvidkaervej 27a, DK-5250 Odense SV, Denmark

HYSTERESIS DIAGRAM

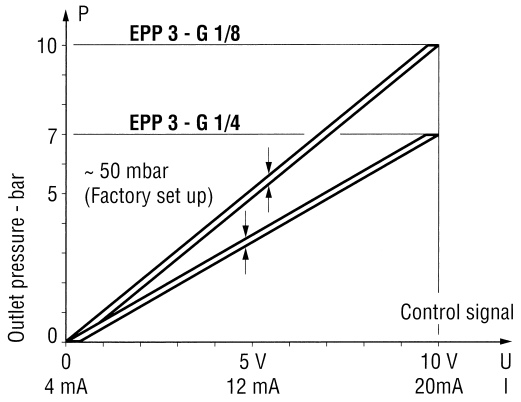

EPP3PC ... 130/600/700

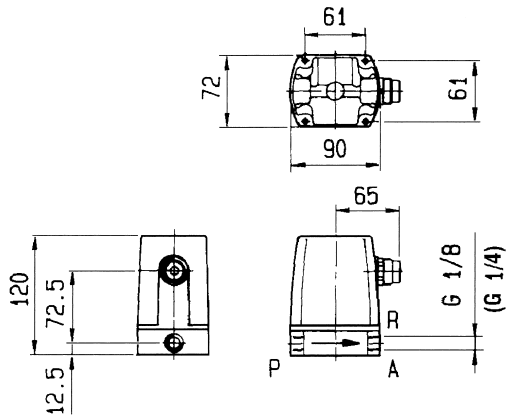



SUMMARY OF TYPES

		Connection G	With integrated pressure sensor	Entry options for external sensor signal		Outlet signal options			Electrical connection	
				Feedback signal 0-10 V	Feedback signal 4-20 mA	Without	0 - 10 V 4 - 20 mA	0 - 10 V 0/24 alarm	DIN 43651 connector	Cable gland Pg. 13.5
EPP3PC	11 U/I 100 10	1/8	•			•				•
	11 U/I 600 10	1/8	•				•		•	
	11 U/I 700 10	1/8	•					•	•	
EPP3PC	13 U/I 130 10	1/8		•		•			•	
	14 U/I 130 10	1/8			•	•			•	
EPP3PC	21 U/I 100 07	1/4	•			•				•
	21 U/I 600 07	1/4	•				•		•	
	21 U/I 700 07	1/4	•					•	•	
EPP3PC	23 U/I 130 07	1/4		•		•			•	
	24 U/I 130 07	1/4			•	•			•	

Parker Lucifer SA
Fluid Control Division Europe
CH-1227 Carouge-Genève

Electropneumatic Pressure Regulator - High Flow

EPP3 Series

TECHNICAL DATA

Fluid:
Lubricated or non lubricated air and neutral gases recommended filtration : 25-50 µ

Temperature range:
Ambient 0 to 50°C
Fluid 0 to 50°C

Inlet pressure range:
1 to 12 bar (the inlet pressure must always be at least 1 bar above the regulated pressure)

Outlet pressure range:
0.2 to 10 bar

Hysteresis:
~ 100 mbar (Factory set up)

Linearity:
1% f.s.o.

Air consumption at constant control signal:
0

Supply voltage:
24 V DC ± 15% (Max. ripple 1 V)

Power consumption:
Max. 6 W with 24 V DC and constant changes of the control signal
<1 W without change of control signal

Control signal:
Analog 0 - 10 V Impedance: 10 k Ω
Analog 4 - 20 mA Impedance: 0.5 k Ω

Outlet sensor signal:
A) proportional pressure outlet signal 0-10 V from integrated sensor (recomended load resistance 10 k Ω)
B) proportional pressure outlet signal 4-20 mA from integrated sensor (recommended load resistance 0.5 k Ω)
C) "Alarm" output signal 0/24 V with adjustable triggering level. (Difference between control signal and sensor pressure signal) (Imax. = 40 mA)
- factory set up: diff. signal = ± 0.8 V to ± 1 V
- possible set up: diff. signal = ± 0.1 V to ± 5 V
To neutralize the alarm output signal during the control signal changes, the use of a synchronized time lag relay is required

Safety position:
In case of control failure or if it is less than 1% of its full scale value, the regulated pressure drops automatically to 0 bar (atmospheric pressure). In case of voltage supply failure, the regulated pressure will be kept constant

Electrical connection:
Through DIN 43651 circular plug-in connector (6 P + E)

Life expectancy:
> 20 Mio changes of control signal steps
Attention: It is compulsory to set the control signal at 0 V or 4 mA each time the air pressure supply is turned off (during the night or the weekend). When the air pressure supply cannot be fully exhausted, it is necessary to assure that the deviation between the control value and the inlet pressure remains smaller than 1 bar.

Mounting position:
Indifferent (recommended position: upright; electronic part on top)

Resistance to vibrations:
30 g in all directions

Degree of protection:
IP 65

Assembly:
Silicone free

Electromagnetic compatibility:
In accordance with IEC 801-4 part 4 standards.

Installation and setting instructions:
See publication MI-9202 and appendix supplied with the product.

Please ask for the special technical specification sheet No. 8679 for more details.

SUMMARY OF TYPES

		Connection G	With integrated pressure sensor	Outlet signal options		Electrical connection
				0 - 10 V 4 - 20 mA	0 - 10 V 0/24 alarm	DIN 43651 connector
EPP3C8	1 U/I 600 10	1	•	•		•
	1 U/I 700 10	1	•		•	•
EPP34CC	1 U/I 600 10	2	•	•		•
	1 U/I 700 10	2	•		•	•

Parker Lucifer SA
Fluid Control Division Europe
CH-1227 Carouge-Genève

HYSTERESIS DIAGRAM

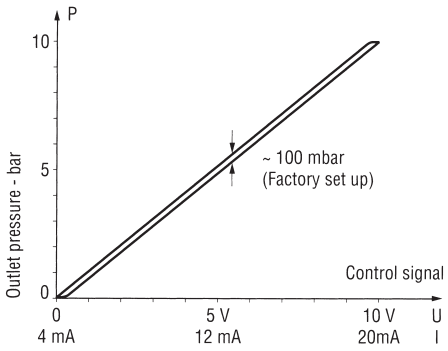

FLOW DATA
Outlet Pressure in Function of Flow at Constant Control Signal (P1 = 7 BAR)

EPP 33 C8... G1

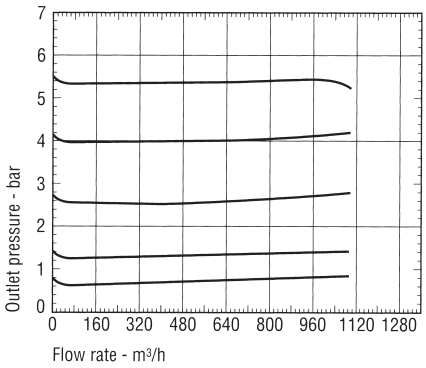



EPP 34 CC... G 2

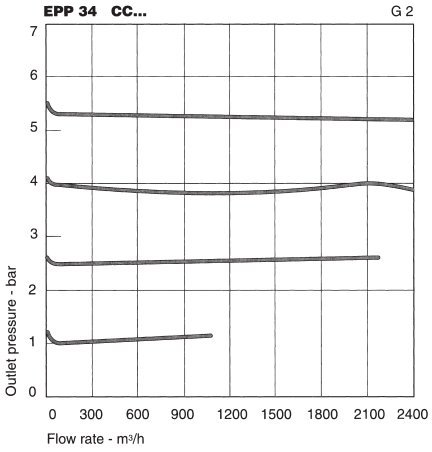

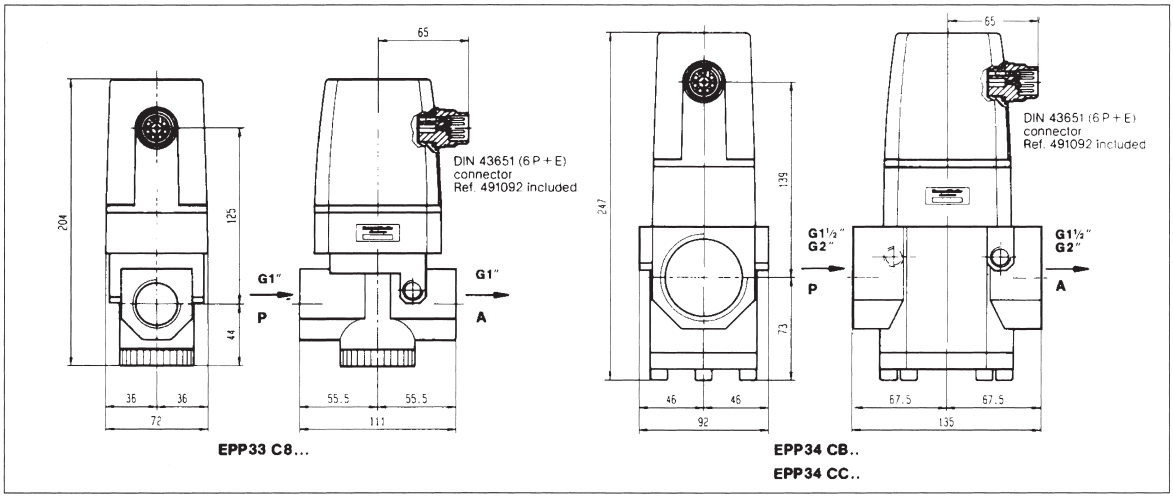

Parker Lucifer SA
Fluid Control Division Europe
CH-1227 Carouge-Genève

Tel: +45 63 12 83 00 | Email: ps@hymatik.com | www.hymatik.com | Hvidkaervej 27a, DK-5250 Odense SV, Denmark

Parker Lucifer SA
Fluid Control Division Europe
CH-1227 Carouge-Genève

Electrical Parts

Index

Pages

Part 1: Housings / Coil assembly kit

Coil housing with screw terminals 333
Waterproof and dustproof coil housing 335
Coil assembly kit 337
Degree of protection IP / NEMA 338

Part 2: Coils

Coils with screw terminals - 40 mm 340
Coils for plug connection - 32 mm 342
Coils for plug connection - 22 mm 346

Part 3: Explosion-proof electrical parts

- Electrical parts for zone 22 347
- Encapsulation **EEx m** 350
- Combination (Encapsulation and Increased safety) **EEx me** 353
- Flameproof enclosure **EEx d** 359
- Combination (Encapsulation and Flameproof enclosure) **EEx md** 361
- Intrinsic safety **EEx ia** or **ib** 362
- Guidance chart for IS barriers 370
- Accessories 376
- Voltage – Voltage codes table 377

Part 4: Explosive environments

- Introduction 378
- Definitions 379
- Type of protection and standards 381

For complete information please refer to publication No. 8700/GB

Parker Lucifer SA
Fluid Control Division Europe
CH-1227 Carouge-Genève

Tel: +45 63 12 83 00 | Email: ps@hymatik.com | www.hymatik.com | Hvidkaervej 27a, DK-5250 Odense SV, Denmark

Housings or coil assembly kits, coils and electrical parts



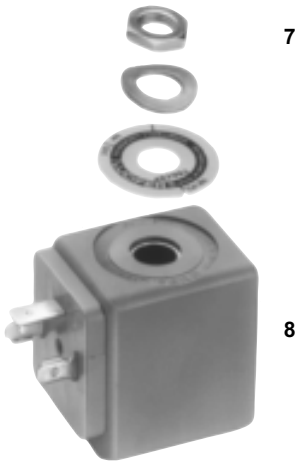

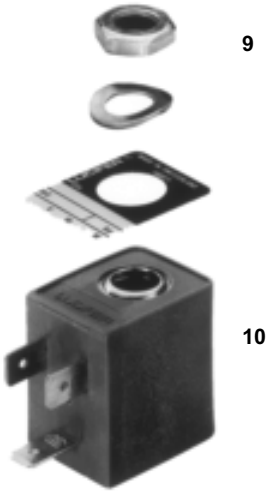

Definitions:

Housing:
We define a **housing** as the combination of the fixing elements including the nameplate **(1)**, the cover **(2)** or the subplate **(6)** and the envelope itself **(4 or 5)** which protects the coil and its electrical components. The housings may be made of metal or plastic material.

Coil assembly kit:
The coil assembly kit **(7 or 9)** is the set comprising a plate, washer and nut. Sometimes coil assembly kits consist only of a nut or a special fixing device.

Coil:
This consists of the winding and its plastic moulding. There are three different types of coils distinguished by their shape and dimensions: 40 mm **(3)**, 32 mm **(8)** and 22 mm **(10)**.

Electrical part:
The electrical part is the set comprising the housing, the assembly kit and the coil.

Warning:

Any Lucifer coil or electrical part may be energized **only when mounted on a valve**.
Otherwise there is a risk of damaging the product and its surroundings (overheating, explosion, fire, etc.).

The data supplied in the Parker Lucifer Catalogs are to be consulted, and pertinent accident prevention regulations are to be followed during product installation and use. Any unauthorized work performed on the product by the purchaser or by third parties can impair its function, and relieves us of all warranty claims and liability for any resulting damage.

Parker Lucifer SA
Fluid Control Division Europe
CH-1227 Carouge-Genève

Tel: +45 63 12 83 00 | Email: ps@hymatik.com | www.hymatik.com | Hvidkaervej 27a, DK-5250 Odense SV, Denmark

Part 1: Housings or coil assembly kits

1.1 Coil housing with screw terminals

1.1.1 Standard housing



Reference: 4270 or **E0**

Material: epoxy-coated steel

Degree of protection: **IP** according to IEC/EN 60529
IP 10 with armoured conduit
IP 44 with cable gland

Electrical connection:

Can be made with armoured conduit or cable gland M12x1.5, Parts No. 495740 and 495741 to be ordered separately.

Grounding connection by screw M3 on the inside of housing base plate.

Weight: 120 g.

Benefits:

This metal housing offers the ideal protection against shocks and corrosion – rotatable 360° – easy mounting in confined spaces – single-nut mounting – light weight – simplifies conversion of existing equipment to other requirements.

Application:

The majority of the Lucifer valves can be fitted with this standard housing, and can be mounted with several compatible Lucifer coils.

Compatible coils:

481000 or **EZ01**
Standard coil,
8 W, class F (155°C), page 12

483520 or **EZ90**
Double-frequency coil,
9 W, class F (155°C), page 12

481044 or **EZ91**
Standard high-power coil,
14 W, class F (155°C), page 12

485100 or **EZ02**
Standard high-temperature coil,
8 W, class H (180°C), page 12

486265 or **EZ92**
High-temperature and high-power coil,
14 W, class H (180°C), page 12

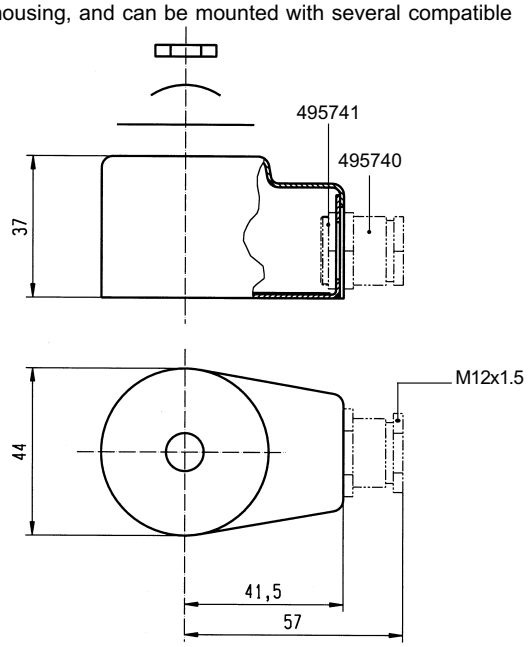

Parker Lucifer SA
Fluid Control Division Europe
CH-1227 Carouge-Genève

Tel: +45 63 12 83 00 | Email: ps@hymatik.com | www.hymatik.com | Hvidkaervej 27a, DK-5250 Odense SV, Denmark

1.1.2 Housing for bistable (impulse) coils



Reference: 4269 or **E1**

Material: epoxy-coated steel

Degree of protection: **IP** according to IEC/EN 60529
IP 10 with armoured conduit
IP 44 with cable gland

Electrical connection:

Can be made with armoured conduit or cable gland M12x1.5, Parts No. 495740 and 495741 to be ordered separately.

Grounding connection by screw M3 on the inside of housing base plate.

Weight: 120 g.

Benefits:

This metal housing offers the ideal protection against shocks and corrosion – rotatable 360° – easy mounting in confined spaces – single-nut mounting – light weight – simplifies conversion of existing equipment to other requirements.

Application:

This housing is specially designed for group 4 coils and can be mounted only with valves controlled by electrical impulses.

Compatible coils: Gr. 4

484990 or **MZ01**
Impulse coil for AC,
11 W, class F (155°C), page 13

485400 or **MZ02**
Impulse coil for DC,
13 W, class F (155°C), page 13

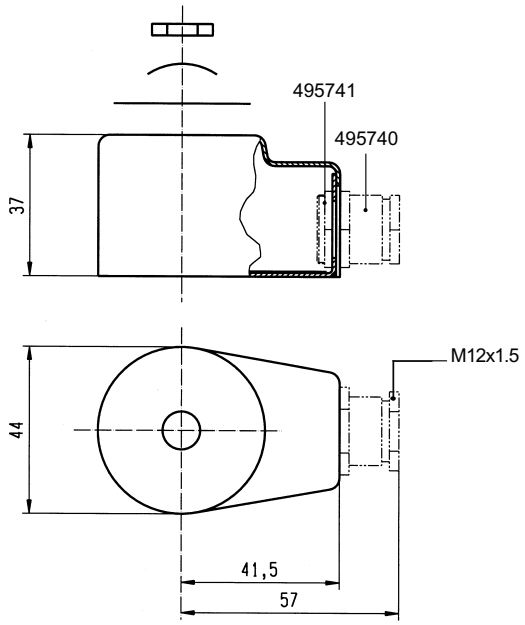

Parker Lucifer SA
Fluid Control Division Europe
CH-1227 Carouge-Genève

Tel: +45 63 12 83 00 | Email: ps@hymatik.com | www.hymatik.com | Hvidkaervej 27a, DK-5250 Odense SV, Denmark

1.2 Waterproof and dustproof housing

1.2.1 Waterproof housing



Reference: 4538 or **G1** **M20 x 1.5**

Material: Galvanized passivated steel

Degree of protection: **IP 67** according to IEC/EN 60529

Electrical connection:

Cable connection by cable gland according to DIN 46320. Cable with outer diameter 6.5 -13.5 mm (M20 x 1.5) can be simply sealed using a rubber gland with resilient sealing rings.

The enclosure is internally and externally fitted with grounding and earthing screw terminals.

Weight: 180 g.

Benefits:

This enclosure is dust- and waterproof. It corresponds to the degree of ''International Protection'' **IP 67** according to IEC / EN 60529. Corrosion resistant, the metal housing offers good protection for the coil against shocks and other outside influences – rotatable 360° – easy mounting in confined spaces – easy access to the screw terminals – single-nut mounting – light weight – simple conversion of existing electrical equipment to other requirements without interruption of fluid passage in the valve.

Application:

This housing can be equipped with several coils of our programme, like the standard, double-frequency and magnetic latch coils

Compatible coils:

481000 or **EZ01**
Standard coil,
8 W, Class F (155°C), page 12

483520 or **EZ90**
Double-frequency coil,
9 W, class F (155°C), page 12

485100 or **EZ02**
Coil for high temperature,
8 W, class H (180°C), page 12

484990 or **MZ01**
Impulse coil for AC,
11 W, class F (155°C), page 13

485400 or **MZ02**
Impulse coil for DC,
13 W, class F (155°C), page 13

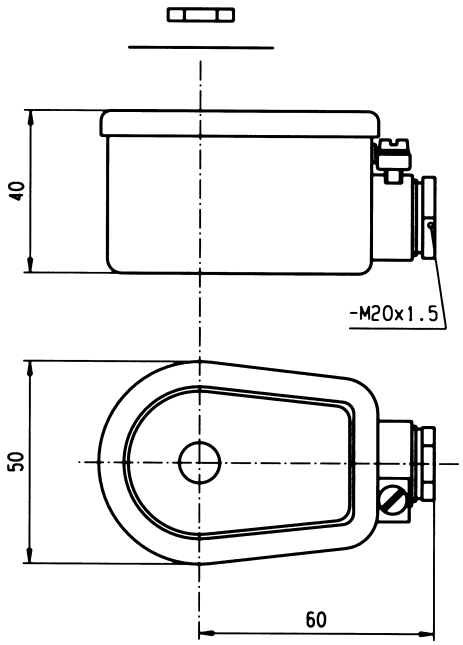

Parker Lucifer SA
Fluid Control Division Europe
CH-1227 Carouge-Genève

Tel: +45 63 12 83 00 | Email: ps@hymatik.com | www.hymatik.com | Hvidkaervej 27a, DK-5250 Odense SV, Denmark

1.2.2 Waterproof housing for high-temperature coils



Reference: 8520 or **G5** **M20 x 1.5**

Degree of protection: **IP 67** according to IEC/EN 60529

Electrical connection:

Cable connection by cable gland according to DIN 46320. Cable with outer diameter 6.5 - 13.5 mm can be simply sealed using a rubber gland with resilient sealing rings.

The enclosure is internally and externally fitted with grounding and earthing screw terminals.

Weight: 180 g.

Benefits:

This enclosure is dust- and waterproof. It corresponds to the degree of ''**I**nternational **P**rotection'' **IP 67** according to IEC / EN 60529. Corrosion resistant, the metal housing offers good protection for the coil against shocks and other outside influences – rotatable 360° – easy mounting in confined spaces – easy access to the screw terminals – single-nut mounting – light weight – simple conversion of existing electrical equipment to other requirements without interruption of fluid passage in the valve.

Application:

The majority of the Lucifer valves can be fitted with this housing and can be mounted with several compatible Lucifer coils for high temperature (14W, class F).

Compatible coils:

481044 or **EZ91**
High power coil,
14 W, Class F (155°C), page 12

486265 or **EZ92**
High power coil,
14 W, class H (180°C), page 12

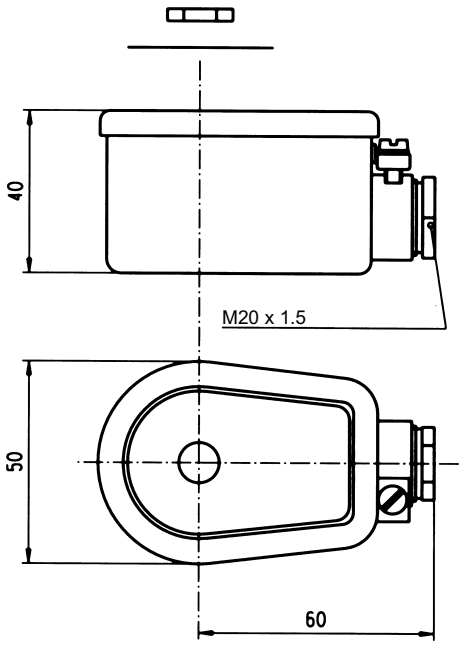

Parker Lucifer SA
Fluid Control Division Europe
CH-1227 Carouge-Genève

Tel: +45 63 12 83 00 | Email: ps@hymatik.com | www.hymatik.com | Hvidkaervej 27a, DK-5250 Odense SV, Denmark

1.3 Coil assembly kits

1.3.1 Coil assembly kit for 22 mm coil



The coil assembly kit corresponds to the numbering system for Lucifer valve housings (Valve-housing - coil - voltage).

It is composed of a nameplate with the details of the valve type, a washer and a nut to secure the 22 mm coil to the valve.

Reference	Code	Specification	Application
8993	**A4**	Standard - aluminium nameplate - passivated washer and nut - pressure indication in [bar]	Standard valves
8993.03	**A1**	Standard - aluminium nameplate - passivated washer and nut - pressure indication in [psi]	Standard valves
8122	**A2**	Special - aluminium nameplate - stainless steel washer and nut - pressure indication in [kPa]	316L St. Steel Valves

1.3.2 Coil assembly kit for 32 mm coil



The coil assembly kit corresponds to the ‘‘housing’’ of Lucifer valve numbering system (Valve - housing - coil - voltage).

It is composed of a nameplate giving details of the valve type, a round washer and a nut to ensure the fixing between 32 mm coil and the valve.

Reference	Code	Specification	Application
2995	**N1**	Standard - aluminium nameplate - passivated iron washer and nut - pressure indication in [bar]	Standards valves
2995.03	**N3**	Standard - aluminium nameplate - passivated iron washer and nut - pressure indication in [psi]	UL / CSA valves
8132	**NL**	Special - aluminium nameplate - stainless steel washer and nut - pressure indication in [kPa]	316L St. Steel valves

1.3.3 Coil assembly kit for CPR coils



It is composed of a plastic nut with a metal insert to secure the CPR coils to the valves, e.g. 133x.../432300C2.

Reference	Code	Specification	Application
8886	**NT**	Plastic nut with metal insert	CPR valves

Parker Lucifer SA
Fluid Control Division Europe
CH-1227 Carouge-Genève

Tel: +45 63 12 83 00 | Email: ps@hymatik.com | www.hymatik.com | Hvidkaervej 27a, DK-5250 Odense SV, Denmark

1.4 Degrees of protection "IP" – IEC/EN 60529

Full-enclosure protection is often required, either in the standards concerning ''potentially explosive environments'' or for other specific needs.

First figure indicates protection against dangerous access and foreign objects	Index	IP	Index	Second figure indicates protection against water penetration
Non-protected	0		0	Non protected
Protected against solid objects Ø 50 mm or more	1		1	Protected against vertically falling water drops
Protected against solid objects Ø 12.5 mm or more	2		2	Protected against vertically falling water drops when enclosure tilted 15°
Protected against solid objects Ø 2.5 mm or more	3		3	Protected against spraying water up to 60° from vertical
Protected against solid objects Ø 1 mm or more	4	5 4	4	Protected against splashing water from any direction
Dust-protected	5		5	Protected against jets of water from any direction
Dust-tight	6		6	Protected against powerful jets of water from any direction
			7	Protected against immersion
			8	Protected against continuous immersion

Correlation between IP (IEC) and NEMA˙ 250 standards

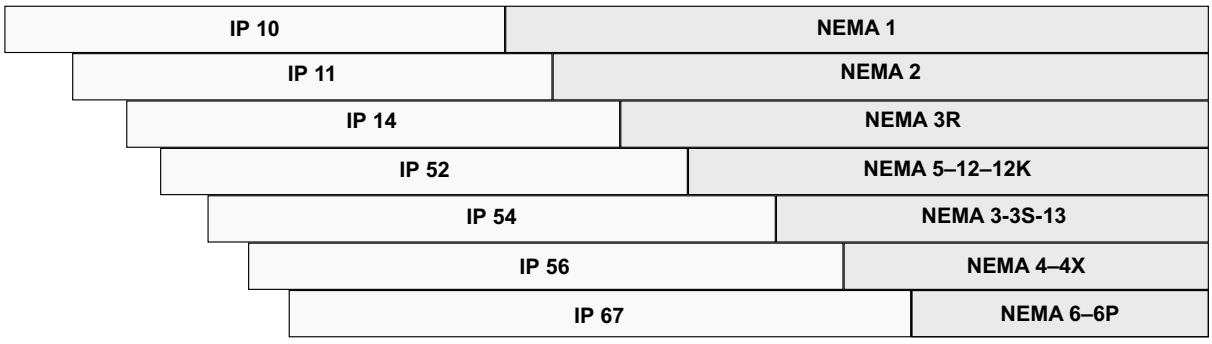

˙ NEMA: National Electrical Manufacturers Association (USA)

The enclosures to NEMA standards 7 to 10 concern equipment for hazardous areas.

Parker Lucifer SA
Fluid Control Division Europe
CH-1227 Carouge-Genève

Tel: +45 63 12 83 00 | Email: ps@hymatik.com | www.hymatik.com | Hvidkaervej 27a, DK-5250 Odense SV, Denmark

Part 2: Coils

Groups:

Lucifer coils and electrical parts are classified by groups determining their compatibility with Lucifer solenoid valves.

In this catalogue you will find the global reference of these groups which is given in most Lucifer catalogues.

The global reference of these groups is composed of one number (principal reference from 1 to 12) defined as follows:

1	Application on valves of 2000 series with 22 mm pilot
2	Application on standard valves or on 7000 series with M20 x 1 pilot
3	Specific application
4	Application on standard valves or on 7000 series with magnetic latch pilot
5	Application on special valves for flameproof electrical parts
6	Application on standard valves or on 7000 series, for coils and low-power electrical parts
7	Application on standard valves or on 7000 series, for intrinsically safe coils and electrical parts
8	Application on special valves, for intrinsically safe coils and electrical parts with booster
9	Application on special valves, for CPR or Offshore coils and electrical parts
10	Application on valves for Offshore coils and electrical parts
11	Application flameproof "d" for Offshore coils and electrical parts
12	Application on Offshore valves with manual reset.

How to order:

1. Valve reference or global reference
2. Housing reference or global reference
3. Coil / electrical part or global reference
4. Voltage or voltage code (see table on page 64)

Ordering example:

121K0756-2995-481865- 3D 220-230/50 3D **or**
7121KBG2LVM0-N1-DZ02 3D

Important: valve, housing or coil can be ordered separately for use as a replacement or spare part.

Parker Lucifer SA
Fluid Control Division Europe
CH-1227 Carouge-Genève

Tel: +45 63 12 83 00 | Email: ps@hymatik.com | www.hymatik.com | Hvidkaervej 27a, DK-5250 Odense SV, Denmark

2.1 Coils with screw terminals:

2.1.1 Standard coils

2



These coils can be mounted with the majority of the Lucifer solenoid valves. They can be mounted with all Lucifer metal housings. The coil winding is completely encapsulated in synthetic material. Easy mounting in confined spaces. Electrical connection with screw terminals for wire up to 1.5 mm˝.

CE

This coil conforms to the IEC/CENELEC safety standards and complies with European low-voltage directive 73/23/EC.

2 / 3

Coil / specification			Standard	Double frequency	High power	High temperature	High temp. + high power
Reference			481000 or **EZ01**	483520 or **EZ90**	481044 or **EZ91**	485100 or **EZ02**	486265 or **EZ92**
Class of insulation			F 155°C	F 155°C	F 155°C	H 180°C	H 180°C
Ambient temperature			-40°C to +50°C	-40°C to +50°C	-40°C to +50°C	-40°C to +50°C	-40°C to +50°C
			The application is limited also by the temperature range of the valve				
Elect. Power	**DC**	**Pn** (hot)	8 W	-	-	8 W	14 W
		P (cold) 20°C	9 W	-	-	9 W	21 W
	AC	**Pn** (holding)	8 W	9 W	14 W	8 W	14 W
		Attraction cold	32 VA (9 W)	36 VA (10 W)	56 VA (20 W)	32 VA (9 W)	56 VA (20 W)
Weight			130 g	130 g	130 g	140 g	140 g

Voltage tolerance: -10% to +10% of Un (-15% to +5% for double-frequency coil with voltage code S6 if 240 V/50/Hz is used).

Duty: Continuous duty coil (ED 100%)

Voltages: see voltage code table

Mounting: examples





Parker Lucifer SA
Fluid Control Division Europe
CH-1227 Carouge-Genève

Tel: +45 63 12 83 00 | Email: ps@hymatik.com | www.hymatik.com | Hvidkaervej 27a, DK-5250 Odense SV, Denmark

2.1.2 Bistable (impulse) coils

4



These coils are specially designed for Lucifer bistable (or impulse or magnetic latch) solenoid valves.

They can be mounted only with Lucifer metallic housings 4269 or 4538. The coil winding is completely encapsulated in synthetic material. Easy mounting in confined spaces. Electrical connection with screw terminals for wire up to 1.5 mm˝.

CE

This coil conforms to the IEC/CENELEC safety standards and complies with European low-voltage directive 73/23/EC.

Coil / Specification			Direct Current		Alternating Current
Diagram			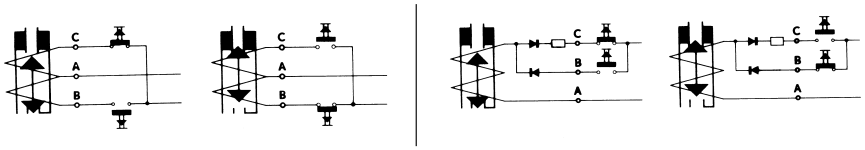 Only an electrical impulse given to terminals A-C reverses the magnetic field. This magnetic field demagnetises the reversible magnet enough to allow the return spring to bring the plunger back to its initial position and close the valve.		
Length of impulses			Switch on (terminals A-B): minimum 50 ms, (maximum 1s) Switch off (terminals A-C): minimum 35 ms, (maximum 1s)		
Reference			485400 or **MZ02**	* 482245 or **MZ90**	484990 or **MZ01**
Electr. Power consuption	**DC**	Attraction (hot)	13 W	13 W	-
		Attraction (cold)	19 W	19 W	-
		Release (hot)	8 W	8 W	-
		Release (cold)	10 W	10 W	-
	AC	Attraction (hot)	-	-	11 W
		Attraction (cold)	-	-	17 W
		Release (hot)	-	-	4 W
		Release (cold)	-	-	7 W

* Electrical part IP67; contact your distributor for details.

Class of insulation material: F 155°C

Ambient temperature: -40°C to +50°C

Voltage tolerances: -10% to +10% of the nominal voltage

Voltages: See voltage code table

Duty: Continuous duty coil (ED 100%)

Weight: 150 g

Mounting: example

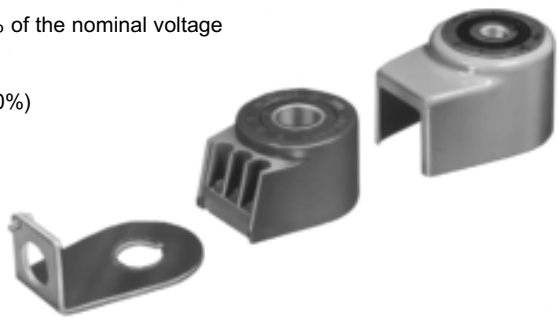

Parker Lucifer SA
Fluid Control Division Europe
CH-1227 Carouge-Genève

Tel: +45 63 12 83 00 | Email: ps@hymatik.com | www.hymatik.com | Hvidkaervej 27a, DK-5250 Odense SV, Denmark

2.2 Coils for DIN plug connection:

2.2.1 32 mm Coils

2



These coils can be mounted with the majority of the Lucifer solenoid valves. This is an encapsulated assembly comprising a coil, integral magnetic iron path and snap-on plug connection. The synthetic material encapsulation provides an effective compact housing, offering full protection against dust, oil, water, etc. Ease of mounting in confined space - offers shock and corrosion protection - simplifies conversion of existing equipment to other requirements, etc.

CE

This coil conforms to the IEC/CENELEC safety standards and complies with European low-voltage directive 73/23/EC.

2 / 3

Specification			Standard	Double frequency	Reduced power	High temperature	High temp. + High power
Ref. (without plug) **Ref.** (with plug)			481865 or **DZ02** 482725 or **DZ03**	483510 or **DZ06** 482635 or **DZ07**	482730 or **DZ90** 482735 or **DZ91**	492453 or **DZ04** 492726 or **DZ05**	492425 or **DZ08** 492727 or **DZ09**
Degree of protection			IP65 according to IEC / EN 60529 standards (with plug connection)				
Class of insulation			F 155°C	F 155°C	F 155°C	H 180°C	H 180°C
Electrical connection			Through a 2 P + E plug according to DIN 43650 type A				
Ambient temperature			-40°C to +50°C The application is limited also by the temperature range of the valve	-40°C to +50°C	-40°C to +50°C	-40°C to +50°C	-40°C to +50°C
Elect. Power	**DC**	**Pn** (hot)	9 W	-	7 W	9 W	14 W
		P (cold) 20°C	12 W	-	9 W	12 W	21 W
	AC	**Pn** (holding)	8 W	9 W	6 W	8 W	14 W
		Attraction cold	26 VA (9 W)	32 VA (10 W)	20 VA (7 W)	26 VA (9 W)	55 VA (18 W)

Voltage tolerances: -10% to +10% of the nominal voltage

Duty: Continuous duty coil (ED 100%)

Voltages: see voltage code table

Weight: 130 g (without plug)

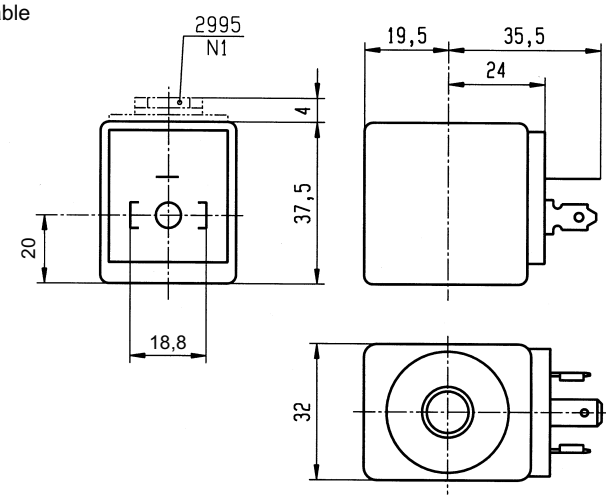

Parker Lucifer SA
Fluid Control Division Europe
CH-1227 Carouge-Genève

Tel: +45 63 12 83 00 | Email: ps@hymatik.com | www.hymatik.com | Hvidkaervej 27a, DK-5250 Odense SV, Denmark

2.2.1.1 32 mm UL-recognized Coil

2



These coils can be mounted with the majority of the Lucifer solenoid valves. This is an encapsulated assembly comprising a coil, integral magnetic-iron path and snap-on plug connection. The synthetic material encapsulation provides an effective compact housing, offering full protection against dust, oil, water, etc. Ease of mounting in confined space - offers shock and corrosion protection - simplifies conversion of existing equipment to other requirements, etc.

This coil is UL-approved as a recognized component for the insulation class F, conforms to the IEC/CENELEC safety standards and complies with European low-voltage directive 73/23/EC.

Specification			UL-recognized coil - UL File E125678 - designation AMIF	
Reference (without plug)			491514 or **D400**	491514 or **D500**
Degree of protection			**IP65** according to IEC / EN 60529 standards (with plug connection)	
Class of insulation			F 155°C	F 155°C
Electrical connection			Through a 2 P + E plug according to DIN 43650 type A	
Ambient temperature			-40°C to 50°C The application is limited also by the temperature range of the valve	- 40°C to 50°C
Elect. Power	DC	**Pn** (hot)	-	12 W
		P (cold) 20°C	-	16 W
	AC	**Pn** (holding)	11 W	-
		Attraction cold	40 VA (13 W)	-

Voltage tolerances: -15% to +10% of the nominal voltage

Duty: Continuous duty coil (ED 100%)

Voltages: see voltage code table

Weight: 130 g (without plug)

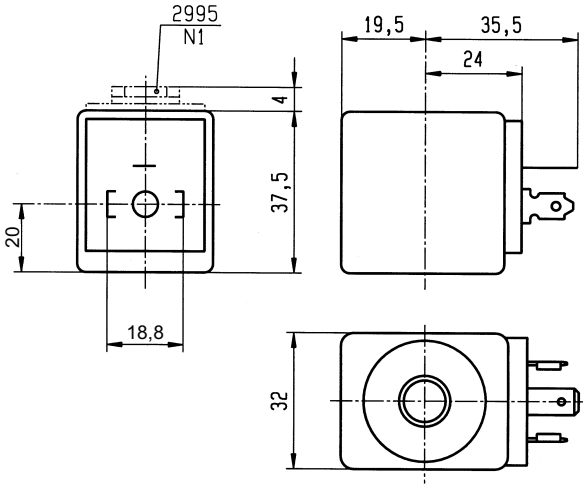

Parker Lucifer SA
Fluid Control Division Europe
CH-1227 Carouge-Genève

Tel: +45 63 12 83 00 | Email: ps@hymatik.com | www.hymatik.com | Hvidkaervej 27a, DK-5250 Odense SV, Denmark

2.2.1.2 32 mm Miniwatt Coil

6



This reduced power coil is compatible with certain types of Lucifer solenoid valves only. This is an encapsulated assembly comprising a coil, integral magnetic iron path and snap-on plug connection. The synthetic material encapsulation provides an effective compact housing, offering full protection against dust, oil, water, etc. Ease of mounting in confined space - offers shock and corrosion protection - simplifies conversion of existing equipment to other requirements, etc.

CE

This coil conforms to the IEC/CENELEC safety standards and complies with European low-voltage directive 73/23/EC.

Specification			Miniwatt
Reference (without plug) **Reference** (with plug)			482740 or **DZ10** 482745 or **DZ11**
Degree of protection			**IP65** according to IEC / EN 60529 standards (with plug connection)
Class of insulation			F 155°C
Electrical connection			Through a 2 P + E plug according to DIN 43650 type A
Ambient temperature			-40°C to +50°C The application is limited also by the temperature range of the valve
Elect. Power	**DC**	**Pn** (hot)	1.6 W
		P (cold) 20°C	2.1 W
	AC	**Pn** (holding)	-
		Attraction cold	-

Voltage tolerance: -10% to +10% of the nominal voltage

Duty: continuous duty coil (ED 100%)

Voltages: see voltage code table

Weight: 130 g (without plug)

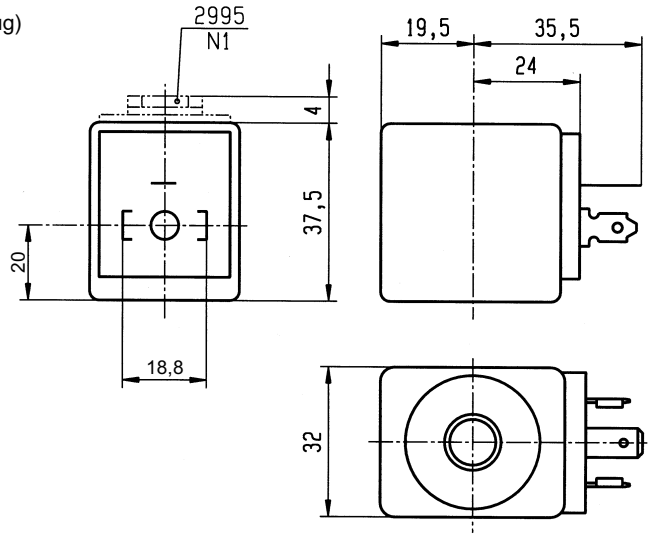

Parker Lucifer SA
Fluid Control Division Europe
CH-1227 Carouge-Genève

Tel: +45 63 12 83 00 | Email: ps@hymatik.com | www.hymatik.com | Hvidkaervej 27a, DK-5250 Odense SV, Denmark

2.2.1.2 32 mm CPR Coil

9



This coil is compatible only with the Offshore and CPR* types of Lucifer solenoid valves. This is an encapsulated assembly comprising a coil, integral magnetic iron path and snap-on plug connection. The synthetic material encapsulation provides an effective compact housing, offering full protection against dust, oil, water, etc. Ease of mounting in confined space - offers shock and corrosion protection - simplifies conversion of existing equipment to other requirements, etc.
(* CPR = Chemical, Petrochemical and Refinery application)

CE

This coil conforms to the IEC/CENELEC safety standards and complies with European low-voltage directive 73/23/EC.

Specification			CPR
Reference (without plug) **Reference** (with plug)			492385 or **DZ92** 492387 or **DZ93**
Degree of protection			**IP65** according to IEC / EN 60529 standards (with plug connection)
Class of insulation			F 155°C
Electrical connection			Through a 2 P + E plug according to DIN 43650 type A
Ambient temperature			-40°C to +50°C The application is limited also by the temperature range of the valve
Elect. Power	**DC**	**Pn** (hot)	9 W
		P (cold) 20°C	12 W
	AC	**Pn** (holding)	9 W
		Attraction cold	12 W

Voltage tolerance: -10% to +10% of the nominal voltage

Duty: continuous duty coil (ED 100%)

Voltages: see voltage code table

Weight: 130 g (without plug)

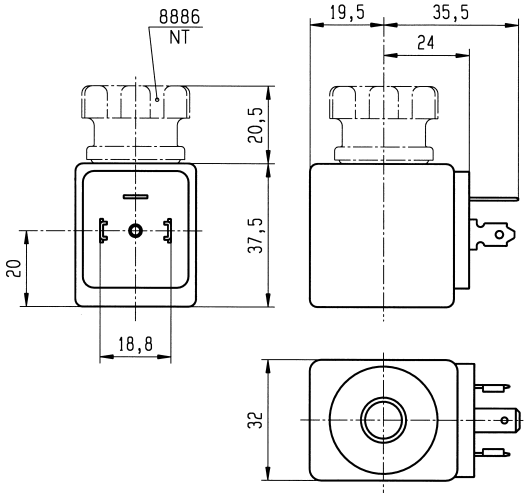

Important:

For AC voltage, this coil must be mounted with a connector (DIN plug) including a rectifier-bridge.

Parker Lucifer SA
Fluid Control Division Europe
CH-1227 Carouge-Genève

Tel: +45 63 12 83 00 | Email: ps@hymatik.com | www.hymatik.com | Hvidkaervej 27a, DK-5250 Odense SV, Denmark

2.2.2 22 mm Coil

1



This miniature coil is designed for valves equipped with a miniature tube assembly. This is an encapsulated assembly comprising a coil, integral magnetic iron path and snap-on plug connection. The synthetic material encapsulation provides an effective compact housing, offering full protection against dust, oil, water, etc. Ease of mounting in confined space - offers shock and corrosion protection - simplifies conversion of existing equipment to other requirements, etc.

CE

This coil conforms to the IEC/CENELEC safety standards and complies with European low-voltage directive 73/23/EC.

Specification			Low power	High power	Standard UL / CSA*	Double frequency
Ref. (without plug) **Ref.** (with plug)			488980 or **DA01** 481045 or **DA02**	481180 or **DA03** 481530 or **DA04**	492912 or **DA05** 492919 or **DA06**	483590 or **DA07**
Degree of protection			IP65 according to IEC / EN 60529 standards (with plug connection)			
Classe of insulation			F 155°C	F 155°C	A 105°C for UL/CSA	F 155°C
Electrical connection			Through a 2 P + E plug according to DIN 43650 type B			
Ambient temperature			-40°C to +50°C The application is limited also by the temperature range of the valve	-40°C to +50°C	-40°C to +50°C	-40°C to +50°C
Elect. Power	**DC**	**Pn** (hot)	2.5 W DC	5 W DC	4 W	-
		P (cold) 20°C	3 W	6.5 W	4.5 W	-
	AC	**Pn** (holding)	2 W	4 W	3 W	3 W
		Attraction cold	5.7 VA (2.5 W)	8.9 VA (5 W)	7.5 VA (4 W)	7.5 VA (4 W)

* This coil is UL/CSA accepted with corresponding approved valves only.

Voltage tolerance: -10 to +10% of the nominal (for coil 492912 and 492919 : - 15% to + 10% of the nominal voltage)

Duty: continuous duty coil (ED 100%)

Voltages: see voltage code table

Weight: 100 g with plug

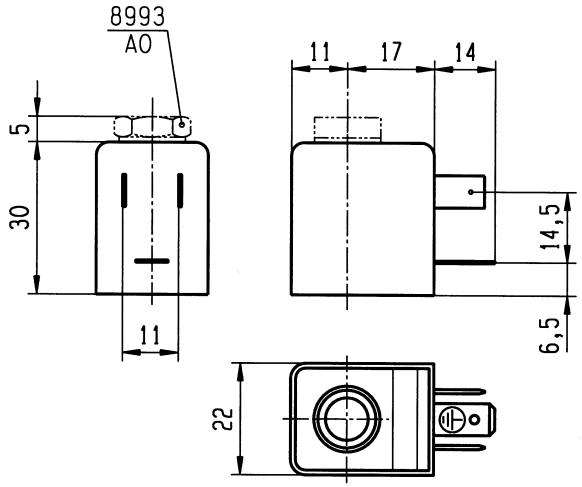

Parker Lucifer SA
Fluid Control Division Europe
CH-1227 Carouge-Genève

Tel: +45 63 12 83 00 | Email: ps@hymatik.com | www.hymatik.com | Hvidkaervej 27a, DK-5250 Odense SV, Denmark

Part 3: Explosion proof electrical parts

3.1 Encapsulated electrical parts for zone 22:

3.1.1 22 mm electrical part with connector

1



Application: Control of solenoid valves in explosive atmospheres where dust dangerous area (zone 22) is required.

Benefits: This is an encapsulated assembly comprising a coil, integral magnetic iron path and snap-on plug connection. The synthetic material encapsulation provides an effective compact housing, offering full protection against dust, oil, water, etc.

Small size for ease of mounting in confined spaces.

All Lucifer valves which are suitable for standard 22 mm coils can be fitted with those electrical parts.

These electrical parts conform to the IEC/CENELEC safety standards and comply with European explosive atmosphere directive 94/9/EC « ATEX ».

Reference			**495865**
Specification			Standard 22 mm
Type of protection		**Dust**	**II 3 D (zone 22)**
Degree of protection			**IP65** according to IEC / EN 60529 standards (with plug connection)
Ambient temperature			- 40 °C to + 50 °C The application is limited also by the temperature range of the valve
Dust temperature class (D)			**95 °C**
Class of insulation			F (155 °)
Electrical connection			Through a 2 P + E plug according to EN 175301-803 type B
Elect. Power	**DC**	**Pn** (hot)	2.5 W
		P (cold) 20°C	3 W
	AC	**Pn** (holding)	2 W
		Attraction cold	5.7 VA (2.5W)
Voltage			24 VDC, 220-230/50
Voltage tolerance			± 10% of the nominal voltage
Solenoid duty			Continuous duty solenoid (ED 100%)

Weight: 120 g.

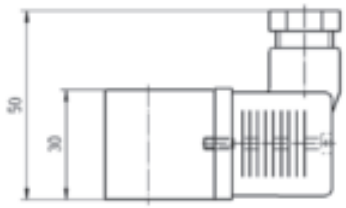

Pg 9

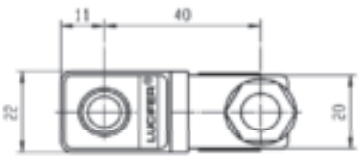

Parker Lucifer SA
Fluid Control Division Europe
CH-1227 Carouge-Genève

Tel: +45 63 12 83 00 | Email: ps@hymatik.com | www.hymatik.com | Hvidkaervej 27a, DK-5250 Odense SV, Denmark

3.1.2 32 mm electrical parts with connector

2



Application: Control of solenoid valves in explosive atmospheres where dust dangerous area (zone 22) is required.

Benefits: This is an encapsulated assembly comprising a coil, integral magnetic iron path and snap-on plug connection. The synthetic material encapsulation provides an effective compact housing, offering full protection against dust, oil, water, etc.

Small size for ease of mounting in confined spaces.

All Lucifer valves which are suitable for standard 32 mm coils can be fitted with those electrical parts.

These electrical parts conform to the IEC/CENELEC safety standards and comply with European explosive atmosphere directive 94/9/EC « ATEX ».

Reference			**495870**	**495875**	**495880**
Specification			Standard 32 mm	Low power 32 mm	High power 32 mm
Type of protection	**Dust**		**II 3 D (zone 22)**		
Degree of protection			**IP65** according to IEC / EN 60529 standards (with plug connection)		
Ambient temperature			- 40 °C to + 50 °C The application is limited also by the temperature range of the valve		
Dust temperature class (D)			**130 °C**	**130 °C**	**170 °C**
Class of insulation			F (155 °C)	F (155 °C)	H (180 °C °)
Electrical connection			Through a 2 P + E plug according to EN 175301-803 type A		
Elect. Power	**DC**	**Pn** (hot)	9 W	7 W	14 W
		P (cold) 20°C	12 W	9 W	21 W
	AC	**Pn** (holding)	8 W	6 W	14 W
		Attraction cold	26 VA (9W)	20 VA (7W)	55 VA (18W)
Voltage			24 VDC, 48/50, 110/50, 220-230/50	24 VDC, 220-230/50	24 VDC, 230/50
Voltage tolerance			± 10% of the nominal voltage		
Solenoid duty			Continuous duty solenoid (ED 100%)		

Weight: 150 g.

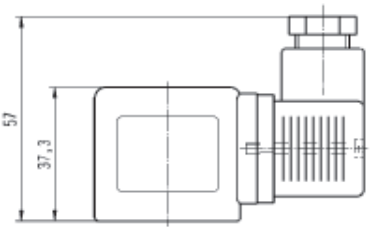

Pg9

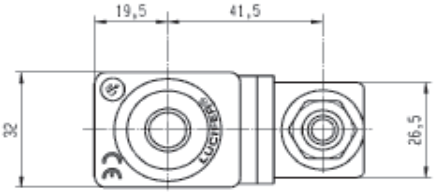

Parker Lucifer SA
Fluid Control Division Europe
CH-1227 Carouge-Genève

Tel: +45 63 12 83 00 | Email: ps@hymatik.com | www.hymatik.com | Hvidkaervej 27a, DK-5250 Odense SV, Denmark

3.2 Increased safety electrical parts for zone 22

3.2.1 Electrical parts 495915

4



Application: Control of solenoid valves in explosive atmospheres where dust dangerous area (zone 22) is required.

Benefits: Rotatable housing 360°, galvanized steel with internal and external screw terminals for earth connection.

Small size for ease of mounting in confined space. Simplifies conversion of existing equipment to hazardous area requirements.

These electrical parts are specially designed for Lucifer bistable (or impulse or magnetic latch) solenoid valves.

These electrical parts conform to the IEC/CENELEC safety standards and comply with European explosive atmosphere directive 94/9/EC « ATEX ».

Reference			495915 DC	495915 AC
Type of protection	Dust		II 3 D (zone 22)	
Dust temperature class (D)			130 °C	
Insulation Class			F (155 °C)	
Ambiant temperature			- 40 °C ÷ + 50 °C The application is limited also by the temperature range of the valve	
Electr. Power consption	DC	Attraction (hot)	13 W	-
		Attraction (cold)	19 W	-
		Release (hot)	8 W	-
		Release (cold)	10 W	-
	AC	Attraction (hot)	-	11 W
		Attraction (cold)	-	17 W
		Release (hot)	-	4 W
		Release (cold)	-	7 W
Voltages, (voltage tolerance)			24 VDC (± 10%)	110-115 VAC; 220-230 VAC, (± 10%)
Duty cycle			100%	

Weight: 320 g

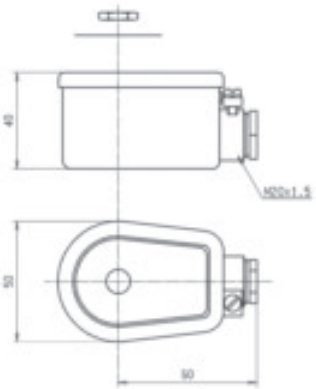

DC



AC



As soon as an electrical impulse is given to the terminals A-B, the electromagnetical force attracts the plunger and simultaneously magnetizes a reversible permanent magnet ring. This magnet retains the plunger in place. Repeated or extended impulses or continuous current do not alter the position of the movable core. It stays in position even without current.
Only an electrical impulse given to terminals A-C reverses the magnetic field. This magnetic field demagnetises the reversible magnet enough to allow the return spring to bring the plunger back to its initial position and close the valve

Switch on (terminals A-B): minimum 50 ms, maximum 1 s
Switch off (terminals A-C): minimum 35 ms, maximum 1 s

Parker Lucifer SA
Fluid Control Division Europe
CH-1227 Carouge-Genève

Tel: +45 63 12 83 00 | Email: ps@hymatik.com | www.hymatik.com | Hvidkaervej 27a, DK-5250 Odense SV, Denmark

3.3 Encapsulated electrical parts “m”:

3.3.1 22 mm electrical part

1



Application: Control of solenoid valves in dangerous areas where explosion-proof protection EEx m II T4 or T5 is required.

Benefits: coil and magnetic circuit encapsulated in synthetic material - offering shock and corrosion protection. AC coils with integrated thermal fuse.

Small size for ease of mounting in confined spaces.

All Lucifer valves which are suitable for standard 22 mm coils can be fitted with those electric parts.

These electrical parts conform to the IEC/CENELEC safety standards and comply with European explosive atmosphere directive 94/9/EC «ATEX».

Reference			482605 or **VA01**	482606 or **VA02** * 482606.10 or **VA12** ° 482606.160 or **VA07**
Approval			**LCIE 02 ATEX 6014 X**	
Type of protection		**Gas**	II 2 G - EEx m II T4	II 2 G - EEx m II T5
		Dust	II 2 D - 130°C	II 2 D - 95°C
Degree of protection			**IP65** according to IEC / EN 60529 standards	
Ambient temperature			-40°C to +50°C	-40°C to +50°C
			The application is limited also by the temperature range of the valve	
Class of insulation			F (155°C)	F (155°C)
Electrical connection			Cable connection (3 x 0.75 mm˝) encapsulated with coil	
Elect. Power	**DC**	**Pn** (hot)	5 W	2.5 W
		P (cold) 20°C	6.5 W	3 W
	AC	**Pn** (holding)	4 W	2 W
		Attraction cold	8.9 VA (5 W)	5.7 VA (2.5 W)
Voltage / Voltage tolerance			see voltage code table / tolerance ± 10% of the nominal voltage	
Solenoid duty			Continuous duty solenoid (ED 100%)	

* 482606.10 for stainless steel application - 1.5 m cable length.
° 482606.160 - 6 m cable length.

Weight: 150 g.

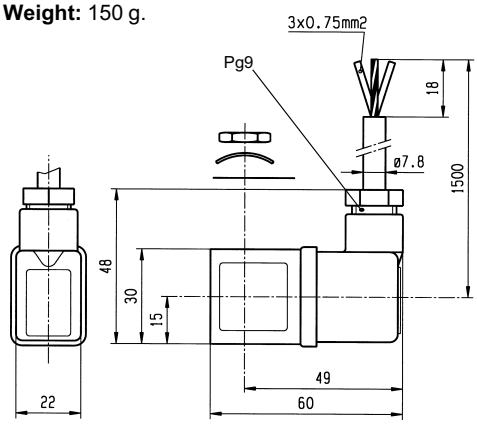

Fuses:

Both electrical parts VA01 and VA02 have to be connected in series with a safety fuse according to CEI 60127-3.

VA01:

DC: 12V, 1000mA - 24V, 500mA - 48V, 200mA - 110V, 100mA

AC 50 Hz: 24V, 500mA - 48V, 250mA - 110/115V, 100mA - 220/230V, 63mA

AC 60 Hz: 24V, 630mA - 110/115V, 125mA - 220/230V, 63mA

VA02:

DC: 12V, 400mA - 24V, 200mA - 48V, 100mA - 110V, 50mA

AC 50 Hz: 24V, 250mA - 48V, 125mA - 110/115V, 63mA - 220/230V, 32mA

AC 60Hz: 24V, 315mA - 110/115V, 63mA - 220/230V, 32mA

Parker Lucifer SA
Fluid Control Division Europe
CH-1227 Carouge-Genève

Tel: +45 63 12 83 00 | Email: ps@hymatik.com | www.hymatik.com | Hvidkaervej 27a, DK-5250 Odense SV, Denmark

3.3.2 32 mm electrical part

2



Application: Control of solenoid valves in dangerous areas where explosion-proof protection EEx m II T4 is required.

Benefits: Coil and magnetic circuit encapsulated in synthetic material - offering shock and corrosion protection. AC/DC coils with integrated thermal fuse. DC coils with integrated surge suppression diode.

Small size for ease of mounting in confined spaces.

All Lucifer valves which are suitable for standards coils (9W DC or 8W AC) can be fitted with this electrical part.

These electrical parts conform to the IEC/CENELEC safety standards and comply with European explosive atmosphere directive 94/9/EC «ATEX».

Reference			492670 or **HZ05** * 492670.10 or **HZ90** ° 492670.160 or **HZ91**
Approval			**LCIE 02 ATEX 6015 X**
Type of protection		**Gas**	II 2 G - EEx m II T4
		Dust	II 2 D - 130°C
Degree of protection			IP65
Ambient temperature			-40°C to +40°C The application is limited also by the temperature range of the valve
Class of insulation			F (155°C)
Electrical connection			Cable connection (3 x 1.5 mm˝) encapsulated with coil
Elect. Power	**DC**	**Pn** (hot)	9 W
		P (cold) 20°C	12 W
	AC	**Pn** (holding)	8 W
		Attraction cold	26 VA (9 W)
Voltage / Voltage tolerance			see voltage code table / tolerance ±10% of the nominal voltage
Solenoid duty			Continuous duty solenoid (ED 100%)

Weight: 320g.

* 492670.10 for stainless steel application - 3 m cable length.
° 492670.160 - 6 m cable length

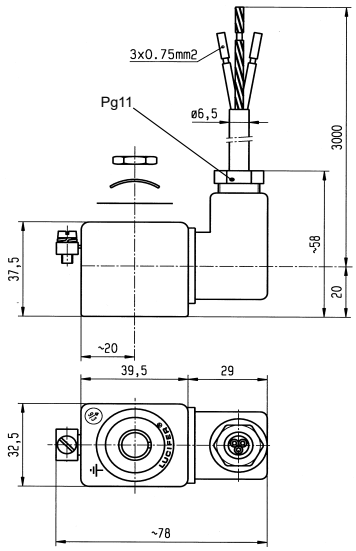

Special conditions:

The supply connection lines have to be fixed and positioned in such a way that they are protected against mechanical damages.

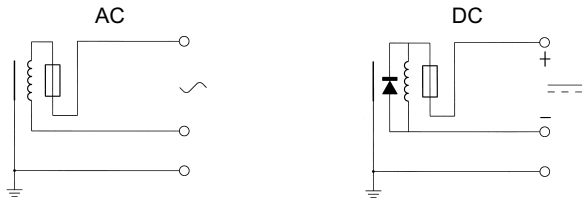

It is necessary to use a safety fuse with a nominal current corresponding to the coil current (max. 3 x nominal according to IEC 60127 and IEC 60269) against short-circuits.

Recommended values:

DC: 12V, 1250mA - 24V, 630mA - 48V, 315mA - 110V, 125mA
AC 50 Hz: 24V, 1000mA - 48V, 500mA - 110, 250mA - 230V, 100mA
AC 60 Hz: 240V, 100mA

Parker Lucifer SA
Fluid Control Division Europe
CH-1227 Carouge-Genève

Tel: +45 63 12 83 00 | Email: ps@hymatik.com | www.hymatik.com | Hvidkaervej 27a, DK-5250 Odense SV, Denmark

3.3.3 Standard electrical parts with waterproof metal housing:

2 / 6



Application: Control of solenoid valves in dangerous areas where explosion-proof protection EEx m II T4 or T5 is required.

Benefits: Epoxy-coated steel housing - solenoid coil, rectifier (silicium diodes), fuse and varistor protection element are completely encapsulated in the coil housing by means of epoxy resin.

Small size for ease of mounting in confined space. Simplifies conversion of existing equipment to hazardous area requirements.

All Lucifer valves which are suitable for standards coils (8 W or 2.5 W DC) can be fitted with these electrical parts.

These electrical parts conform to the IEC/CENELEC safety standards and comply with European explosive atmosphere directive 94/9/EC «ATEX».

			2		6
Reference			492070 or **VZ01** *492070.60 or **VZ96**	492370 or **VZ05**	492070.03 or **VZ21**
Approval			**LCIE 02 ATEX 6017 X**		**AUS Ex. 321**
Type of protection		**Gas**	II 2 G - EEx m II T4	II 2 G - EEx m II T5	Ex m IIC T4 / T5 Classe I - Zone 1
		Dust	II 2 D - 130°C	II 2 D - 95°C	
Degree of protection			IP67		IP67
Ambient temperature			-40°C to +65°C	-40°C to +40°C	-40 to +65°C / +40 °C
			The application is limited also by the temperature range of the valve		
Class of insulation			F (155°C)		F (155°C)
Electrical connection			Cable connection (3 x 1.5mm˝) with cable gland M20x1.5, external earth screw connection		
Elect. Power	**DC**	**Pn** (hot)	8 W	2.5 W	8 W
		P (cold) 20°C	10 W	3 W	10 W
	AC	**Pn** (holding)	9 W	2.5 W	9 W
		Attraction cold	11 W	3 W	11 W
Voltage / Voltage tolerance			see voltage code table / tolerance ± 10% of the nominal voltage		
Solenoid duty			Continuous duty solenoid (ED 100%)		

Weight: 500 g.

* 492070.60 - 6 m cable length

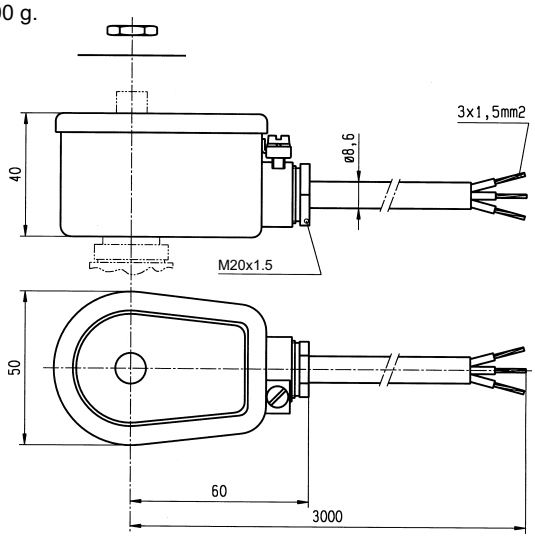

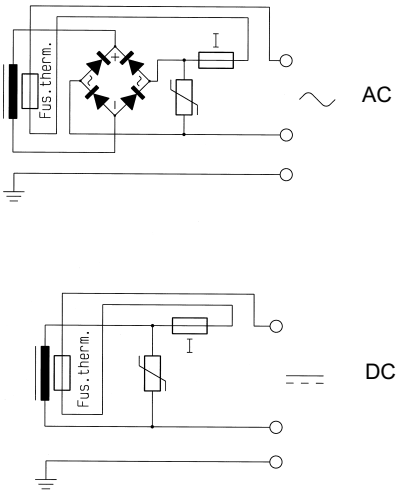

Parker Lucifer SA
Fluid Control Division Europe
CH-1227 Carouge-Genève

Tel: +45 63 12 83 00 | Email: ps@hymatik.com | www.hymatik.com | Hvidkaervej 27a, DK-5250 Odense SV, Denmark

3.3.4 CPR electrical parts with waterproof metal housing:

9



Application: Control of solenoid valves in dangerous areas where explosion-proof protection EEx m II T4 or T5 is required.

Benefits: Epoxy-coated steel housing - solenoid coil, rectifier (silicium diodes), fuse and varistor protection completely encapsulated in the coil housing by means of epoxy resin.

Small size for ease of mounting in confined space. Simplifies conversion of existing equipment to hazardous area requirements.

All Lucifer valves equipped with the specific CPR* upper parts, can be fitted with this electrical part.
(* **CPR** = Chemical, Petrochemical and Refinery application)

These electrical parts conform to the IEC/CENELEC safety standards and complies with European explosive atmosphere directive 94/9/EC «ATEX».

Reference			492270 or **VZ02**	
Approval			**LCIE 02 ATEX 6017 X**	
Type of protection		**Gas**	II 2 G - EEx m II T4	II 2 G - EEx m II T5
		Dust	II 2 D - 130°C	II 2 D - 95°C
Degree of protection			IP67	
Ambient temperature			-40°C to +65°C The application is limited also by the temperature range of the valve	-40°C to +40°C
Class of insulation			F (155°C)	
Electrical connection			Cable connection (3 X 1.5mm²) with cable gland M20 x 1.5, external earth screw connection	
Elect. Power	**DC**	**Pn** (hot)	5 W	
		P (cold) 20°C	6 W	
	AC	**Pn** (holding)	5 W	
		Attraction cold	6 W	
Voltage / Voltage tolerance			see voltage code table / tolerance ±10% of the nominal voltage	
Solenoid duty			Continuous duty solenoid (ED 100%)	

Weight: 500 g.

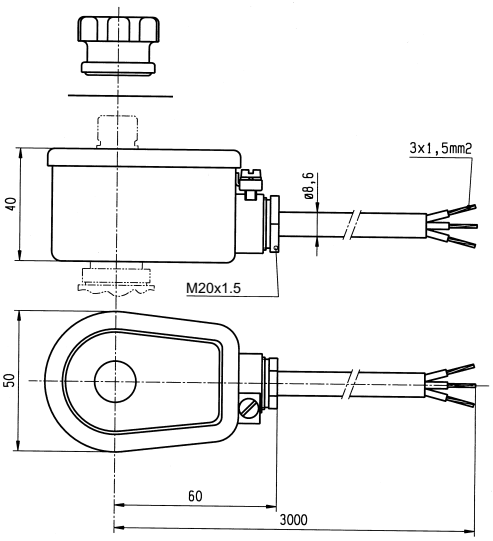

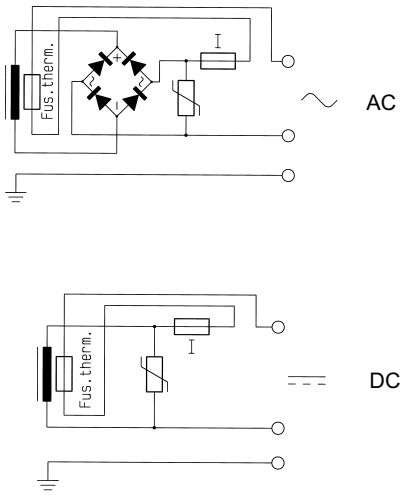

Parker Lucifer SA
Fluid Control Division Europe
CH-1227 Carouge-Genève

Tel: +45 63 12 83 00 | Email: ps@hymatik.com | www.hymatik.com | Hvidkaervej 27a, DK-5250 Odense SV, Denmark

3.4 Increased safety electrical parts “me”:

3.4.1 Electrical parts 483371 or HZ06 and 494040 or HZ23

2



Application: Control of solenoid valves in dangerous areas where explosion-proof protection EEx me II T3 or T4 is required.

Benefits: Rotatable housing 360°, galvanized steel with internal and external screw terminals for earth connection.

Small size for ease of mounting in confined space. Simplifies conversion of existing equipment to hazardous area requirements.

All Lucifer valves suitable for standard 8 W DC or AC coils can be fitted with these electrical parts.

These electrical parts conform to the IEC/CENELEC safety standards and comply with European explosive atmosphere directive 94/9/EC «ATEX».

Reference			483371 or **HZ06** * 483371.01 or **HZ14**	494040 or **HZ23**	
Approval			**LCIE 02 ATEX 6011 X**	**LCIE 02 ATEX 6013 X**	
Type of protection		**Gas**	II 2 G - EEx me II T4	II 2 G - EEx me II T3	II 2 G - EEx me II T4
		Dust	II 2 D - 130°C	II 2 D - 195°C	II 2 D - 130°C
Degree of protection			IP67	IP67	
Ambient temperature			-40°C to +65°C	-40°C to +90°C	-40°C to +65°C
			The application is limited also by the temperature range of the valve		
Class of insulation			F (155°C)	H (180°C)	
Electrical connection			By special cable gland M20 x 1.5 EExe on screw terminals for wires up to 1.5 mm². Cables with outside diameter 6.5 to 13.5 mm can be simply sealed using the rubber gland with resilient sealing rings supplied.		
Elect. Power	**DC**	**Pn** (hot)	8 W	8 W	
		P (cold) 20°C	9 W	9 W	
	AC	**Pn** (holding)	8 W	8 W	
		Attraction cold	32 VA (9 W)	32 VA (9 W)	
Voltage / Voltage tolerance			see voltage code table / tolerance -10/ +10% of the nominal voltage		
Solenoid duty			Continuous duty solenoid (ED 100%)		

Weight: 320 g.

*483371.01 for CPR valves

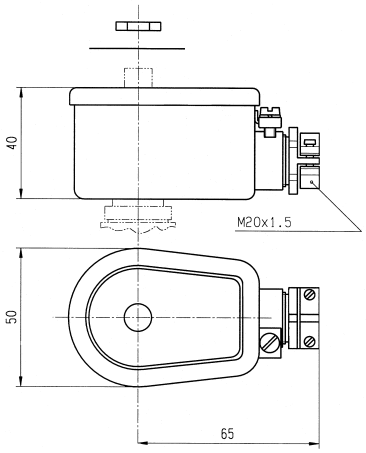

Fuses:

Both electrical parts HZ06 and HZ23 have to be connected in series with a safety fuse according to IEC 60127-3.

HZ06:

DC: 12V, 1000mA, 24V, 400mA - 48V, 250mA - 110V, 100mA

AC 50 Hz: 24V, 630mA - 48V, 315mA - 110V, 160mA - 220/230V, 80mA

AC 60 H2: 24V, 750mA - 110V, 160mA - 240V, 80mA

HZ23:

DC: 24V, 400mA - 48V, 250mA - 110V, 100mA, 220V, 63mA

AC 50 Hz: 24V, 630mA - 48V, 315mA - 110/115V, 160mA - 220/230V, 80mA

Parker Lucifer SA
Fluid Control Division Europe
CH-1227 Carouge-Genève

Tel: +45 63 12 83 00 | Email: ps@hymatik.com | www.hymatik.com | Hvidkaervej 27a, DK-5250 Odense SV, Denmark

3.4.2 Low power electrical part 491117 or VZ04

6



Application: Control of solenoid valves in dangerous areas where explosion-proof protection EEx me II T5 is required.

Benefits: Rotatable housing 360°, galvanized steel with internal and external screw terminals for earth connection.

Small size for ease of mounting in confined space. Simplifies conversion of existing equipment to hazardous area requirements.

All Lucifer valves which are suitable for standard coils 2.5 WDC only can be fitted with this electrical part.

This electrical part conforms to the IEC/CENELEC safety standards and complies with European explosive atmosphere directive 94/9/EC «ATEX».

Reference			491117 or **VZ04**
Approval			**LCIE 02 ATEX 6012 X**
Type of protection		**Gas**	II 2 G - EEx me II T5
		Dust	II 2 D - 95°C
Degree of protection			IP67
Ambient temperature			-40°C to +65°C The application is limited also by the temperature range of the valve
Class of insulation			F (155°C)
Electrical connection			By special cable gland M20 x 1.5 "EEx e" on screw terminals for wires up to 1.5 mm". Cables with outside diameter 6.5 mm to 13.5 mm can be simply sealed using the rubber gland with resilient sealing rings supplied.
Elect. Power	**DC**	**Pn** (hot)	2.5 W
		P (cold) 20°C	3 W
	AC	**Pn** (holding)	-
		Attraction cold	-
Voltage / Voltage tolerance			see voltage code table / tolerance -10/ +10% of the nominal voltage
Solenoid duty			Continuous duty solenoid (ED 100%)

Weight: 320 g.

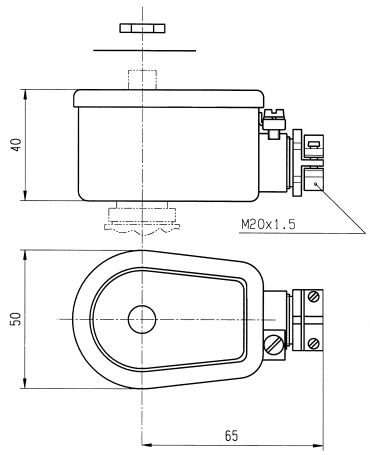

Fuses:

The electrical part VZ04 has to be connected in series with a safety fuse according to IEC 60127-3

VZ04:
DC: 24V, 160mA

Parker Lucifer SA
Fluid Control Division Europe
CH-1227 Carouge-Genève

Tel: +45 63 12 83 00 | Email: ps@hymatik.com | www.hymatik.com | Hvidkaervej 27a, DK-5250 Odense SV, Denmark

3.5 Encapsulated and increased safety electrical parts “me”:

3.5.1 Electrical parts 492190 or VZ03 and 492390 or VZ06

2 / 6



Application: Control of solenoid valves in dangerous areas where explosion-proof protection EEx me II T3 to T6 is required.

Benefits: Rotatable 360°, fibreglass-reinforced plastic housing. Solenoid coil, rectifier (silicium diodes), fuses and varistor protection are completely encapsulated into the coil housing by epoxy resin for shock and corrosion protection.

Small size for ease of mounting in confined space.

All Lucifer valves suitable for standard 8WDC coils can be fitted with the VZ03, and all Lucifer valves with the suffix ‘‘80’’ can be fitted with VZ06 electrical parts.

These electrical parts conform to the IEC/CENELEC safety standards and comply with European explosive atmosphere directive 94/9/EC «ATEX».

			2		6	
Reference			492190 or **VZ03** *492190.10 or **VZ90**		492390 or **VZ06**	492190.03 or **VZ34**
Approval			**LCIE 02 ATEX 6023 X**			**AUS Ex 321**
Type of protection		**Gas**	II 2 G - EEx me II T3	II 2 G - EEx me II T4	II 2 G - EEx me II T5/T6	Ex me IIC T3 / T4 Classe I - Zone 1
		Dust	II 2 D - 195°C	II 2 D -95°C	II 2 D -130°C / 80°C	
Degree of protection			IP66	IP66	IP66	IP65
Ambient temperature			-40°C to +75°C	-40°C to +40°C	-40°C to 75/+40°C	-40°C to 75/+40°C
			The application is limited also by the temperature range of the valve			
Class of insulation			F (155°C)		F (155°C)	
Electrical connection			Screw terminals within terminal box. Cable connection through a cable gland M20 x 1.5 Additional earth connection on external screw terminal			
Elect. Power	**DC**	**Pn** (hot)	9 W		2.5 W	9W
		P (cold) 20°C	11 W		3 W	11 W
	AC	**Pn** (holding)	11 W		2.5 W	11 W
		Attraction cold	13 W		3 W	13 W
Voltage / Voltage tolerance			see voltage code table / tolerance ±10% of the nominal voltage			
Solenoid duty			Continuous duty solenoid (ED 100%)			

Weight: 500 g.

* 492190.10 for stainless steel valves applications.

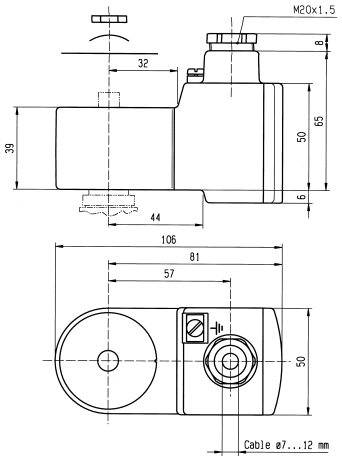

Simplifies conversion of existing equipment to hazardous area requirements (according to CENELEC standards EN 50014, EN 50019 and EN 50028).

The electrical part **VZ06** can be used only with the low-power valves.

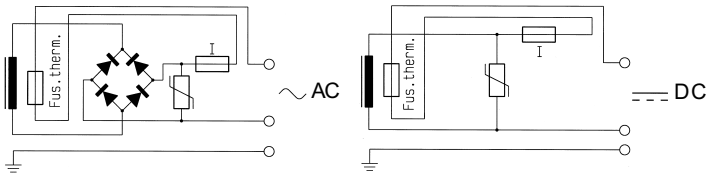

Parker Lucifer SA
Fluid Control Division Europe
CH-1227 Carouge-Genève

Tel: +45 63 12 83 00 | Email: ps@hymatik.com | www.hymatik.com | Hvidkaervej 27a, DK-5250 Odense SV, Denmark

3.5.2 Electrical parts 492200 or VZ13, 492210 or VZ26

9 / 10



Application: Control of solenoid valves in dangerous areas where explosion-proof protection EEx me II T5 to T6 is required.

Benefits: Rotatable 360°, fibreglass-reinforced plastic housing. Solenoid coil and booster electronic are completely encapsulated into the coil housing by epoxy resin for shock and corrosion protection.

Small size for ease of mounting in confined space.

All Lucifer valves suitable for CPR/Offshore application can be fitted with these electrical parts (except type U033X).

These electrical parts conform to the IEC/CENELEC safety standards and comply with European explosive atmosphere directive 94/9/EC «ATEX».

		9		10	
Reference		492200 or **VZ13**		492210 or **VZ26**	
Approval		**LCIE 02 ATEX 6023 X**			
Type of protection	**Gas**	II 2 G - EEx me II T5	II 2 G - EEx me II T6	II 2 G - EEx me II T5	II 2 G - EEx me II T6
	Dust	II 2 D -95°C	II 2 D -80°C	II 2 D -95°C	II 2 D -80°C
Degree of protection		IP66		IP66	
Ambient temperature		-40°C to +75°C	-40°C to +40°C	-40°C to +75°C	-40°C to +40°C
		The application is limited also by the temperature range of the valve			
Class of insulation		F (155°C)		F (155°C)	
Electrical connection		Screw terminals within terminal box. Cable connection through a cable gland M20X1.5 Additional earth connection on external screw terminal			
Power consumption DC		1 bis 1.8 W, depending on cable length		1 bis 1.8 W, depending on cable length	
Inrush current (attraction) min. required for holding		Provided by booster circuit during ~50 ms as soon as the Zener voltage of 21.6 V is reached I mini = 60 mA (I nominal = 75 mA)			
Voltage DC		U nominal = 24 VDC, Umini = 21.6 VDC			
Resistance/additional resistance		23 Ω + (R = 270 Ω)			
Inductance		0 mH			
Capacitance		0 µF			
Response time		2 - 4 s			
Voltage / Voltage tolerance		see voltage code table / tolerance ± 10% of the nominal voltage			
Solenoid duty		Continuous duty solenoid (ED 100%)			

Weight: 500 g.

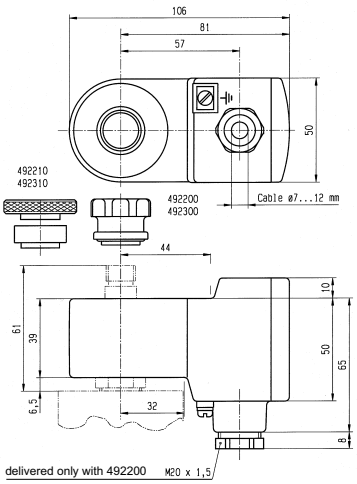

Indications:

VZ13 = Booster for CPR valves
VZ26 = Booster for Offshore valves

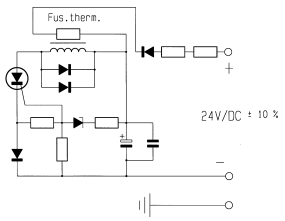

These electrical parts need an external fuse of I = 100 mA

Parker Lucifer SA
Fluid Control Division Europe
CH-1227 Carouge-Genève

Tel: +45 63 12 83 00 | Email: ps@hymatik.com | www.hymatik.com | Hvidkaervej 27a, DK-5250 Odense SV, Denmark

3.5.3 Electrical part 492300 or VZ14 and 492310 or VZ27

9/10/12



Application: Control of solenoid valves in dangerous areas where explosion-proof protection EEx me II T5 to T6 is required.

Benefits: Rotatable 360° fibreglass-reinforced plastic housing. Solenoid coil, rectifier (silicium diodes), fuses and varistor protection are completely encapsulated into the coil housing by epoxy resin for shock and corrosion protection.

Small size for ease of mounting in confined space.

All Lucifer valves suitable for CPR/Offshore application can be fitted with these electrical parts.

These electrical parts conform to the IEC/CENELEC safety standards and comply with European explosive atmosphere directive 94/9/EC «ATEX».

			9		10/12
Reference			492300 or **VZ14**	492310 or **VZ27**	492310.03 or **VZ29**
Approval			**LCIE 02 ATEX 6023 X**		**AUS Ex 321**
Type of protection		**Gas**	II 2 G - EEx me II T4	II 2 G - EEx me II T5	Ex me IIC T4 / T5 Classe I - Zone 1
		Dust	II 2 D - 130°C	II 2 D - 95°C	
Degree of protection			IP66		IP65
Ambient temperature			-40°C to +75°C	-40°C to +40°C	-40 to +40 / + 75°C
			The application is limited also by the temperature range of the valve		
Class of insulation			F (155°C)		
Electrical connection			Screw terminals within terminal box. Cable connection through a cable gland M20 x 1.5 Additional earth connection on external screw terminal		
Elect. Power	**DC**	**Pn** (hot)	6 W		6 W
		P (cold) 20°C	7.5 W		7.5 W
	AC	**Pn** (holding)	6 W		6 W
		Attraction cold	7.5 W		7.5 W
Voltage / Voltage tolerance			see voltage code table / tolerance ±10% of the nominal voltage		
Solenoid duty			Continuous duty solenoid (ED 100%)		

Weight: 500 g.

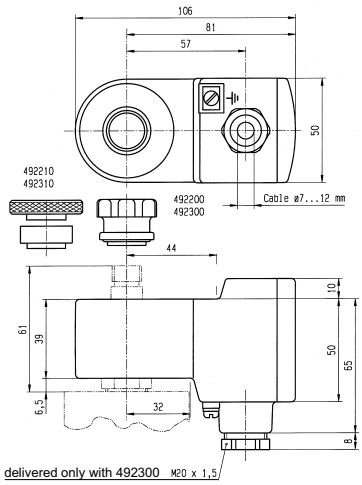

Indications:

VZ14 = for CPR valves
VZ27 = for Offshore valves

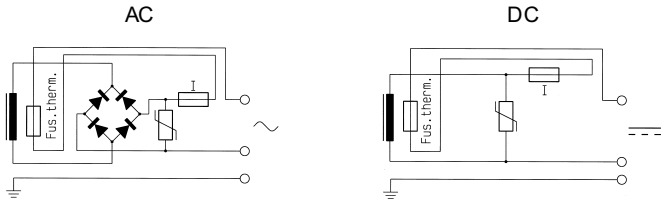

Parker Lucifer SA
Fluid Control Division Europe
CH-1227 Carouge-Genève

Tel: +45 63 12 83 00 | Email: ps@hymatik.com | www.hymatik.com | Hvidkaervej 27a, DK-5250 Odense SV, Denmark

3.6 Flameproof electrical parts "d":

3.6.1 Electrical part 483250 or HZ08

5



Application: Control of solenoid valves in dangerous areas where explosion-proof protection EEx d IIC T4 to T6 is required.

Benefits: Rotatable 360°, housing made of cast iron with internal connection chamber: Cover made of aluminium alloy fixed with 4 screws. The electromagnetic control pilot is composed of three main elements: housing, coil and plunger tube including housing plate.

Small size for ease of mounting in confined space.

All Lucifer valves with the suffix "1D" (except CPR/Offshore valves 1D) can be fitted with these electrical parts.

These electrical parts conform to the IEC/CENELEC safety standards and

Reference			483250 or **HZ08**		
Approval			**LCIE 02 ATEX 6007**		
Type of protection		**Gas**	II 2 G - EEx d IIC T4	II 2 G - EEx d IIC T5	II 2 G - EEx d IIC T6
		Dust	II 2 D - 130°C	II 2 D - 95°C	II 2 D - 80°C
Degree of protection			IP64 with appropriate cable gland		
Ambient temperature			-40 to +80°C	-40 to +75°C	-40 to +60°C The application is limited also by the temperature range of the valve
Class of insulation			F (155°C)		
Electrical connection			The electrical connection is made within the housing connection chamber on an accessible screw terminal. The cable entry to the connecting chamber is made through 1/2" NPT thread suitable for fitting an approved EEx d IIC cable gland (493426).		
Elect. Power	**DC**	**Pn** (hot)	8 W		
		P (cold) 20°C	9 W		
	AC	**Pn** (holding)	8 W		
		Attraction cold	32 VA (9 W)		
Voltage / Voltage tolerance			see voltage code table / tolerance -10/ +10% of the nominal voltage		
Solenoid duty			Continuous duty solenoid (ED 100%)		

Weight: 1100 g (with coil)

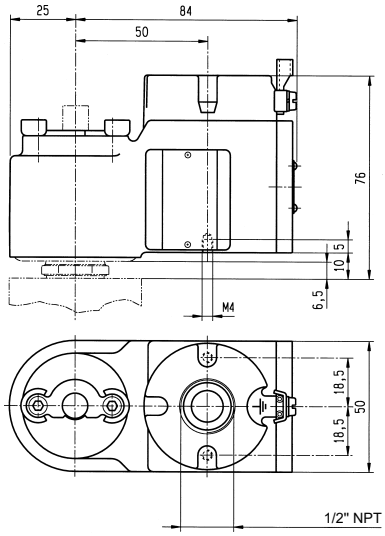

Plunger tube

The plunger tube is welded to the stainless steel plate and is therefore integrated into the housing, which is screwed on the valve body.

This electrical part is supplied only as complete unit mounted on a valve, as the "EEx d" protection depends on minimum gap between plunger tube, plate and housing.

Parker Lucifer SA
Fluid Control Division Europe
CH-1227 Carouge-Genève

Tel: +45 63 12 83 00 | Email: ps@hymatik.com | www.hymatik.com | Hvidkaervej 27a, DK-5250 Odense SV, Denmark

3.6.2 Electrical parts 483270 or HZ19 and 483270.02 or HZ21

9



Application: Control of solenoid valves in dangerous areas where explosion-proof protection EEx d IIC T4 to T6 is required.

Benefits: Rotatable 360°, housing made of cast iron with internal connection chamber: Cover made of aluminium alloy fixed with 4 screws. The electromagnetic control pilot is composed of three main elements: housing, coil and plunger tube including housing plate.

Small size for ease of mounting in confined space.

All Lucifer valves with suffix ''1D'' and suited for CPR/Offshore application can be fitted with these electrical parts

These electrical parts conform to the IEC/CENELEC safety standards and comply with European explosive atmosphere directive 94/9/EC «ATEX».

Reference			483270 or **HZ19** (M20 x 1.5)		483270.02 or **HZ21** (1/2 NPT)
Approval			**LCIE 02 ATEX 6008 X**		
Type of protection		**Gas**	II 2 G - EEx d IIC T4	II 2 G - EEx d IIC T5	II 2 G - EEx d IIC T6
		Dust	II 2 D - 130°C	II 2 D - 95°C	II 2 D - 80°C
Degree of protection			IP66 with appropriate cable gland		
Ambient temperature			-40 to +80°C	-40 to +75°C	-40 to +60°C The application is limited also by the temperature range of the valve
Class of insulation			F (155°C)		F (155°C)
Electrical connection			The electrical connection is made within the housing connection chamber on an accessible screw terminal. The cable entry to the connecting chamber is made through 1/2" NPT or M20 x 1.5 thread suitable for fitting an approved EEx d IIC cable gland.		
Elect. Power	**DC**	**Pn** (hot)	8 W		
		P (cold) 20°C	9 W		
	AC	**Pn** (holding)	8 W		
		Attraction cold	9 W		
Voltage / Voltage tolerance			see voltage code table / tolerance -10/ +10% of the nominal voltage		
Solenoid duty			Continuous duty solenoid (ED 100%)		

Weight: 1100 g (with coil)

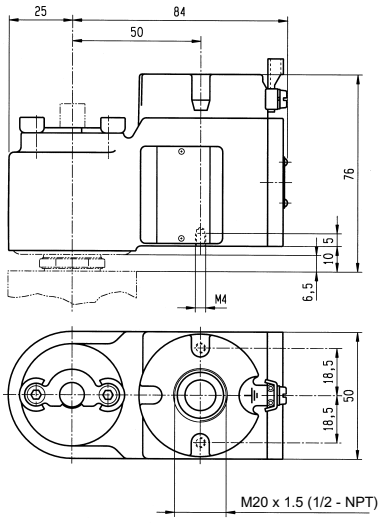

Plunger tube

The plunger tube is welded to the stainless steel plate and is thus integrated to the housing which is screwed on the valve body.

This electrical part is supplied only as complete unit mounted on a valve, as the ''EEx d'' protection depends on minimum gap between plunger tube, plate and housing.

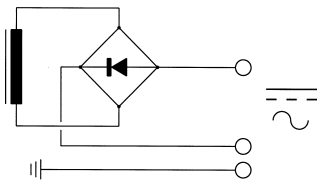

Parker Lucifer SA
Fluid Control Division Europe
CH-1227 Carouge-Genève

Tel: +45 63 12 83 00 | Email: ps@hymatik.com | www.hymatik.com | Hvidkaervej 27a, DK-5250 Odense SV, Denmark

3.6.3 Electrical part HZ09

5



Application: Control of solenoid valves in dangerous areas where explosion-proof protection EEx md IIC T4 to T5 is required.

Benefits: Metal armature encapsulated in synthetic material provides high shock and corrosion protection.

Small size for ease of mounting in confined space.

All Lucifer valves suitable for standard 8W coils can be fitted with this electrical part.

These electrical part conforms to the IEC/CENELEC safety standards and complies with European explosive atmosphere directive 94/9/EC «ATEX».

Reference			493640 or **HZ09**	
Approval			**LCIE 02 ATEX 6009 X**	
Type of protection		**Gas**	II 2 G - EEx md IIC T4	II 2 G - EEx md IIC T5
		Dust	II 2 D - 130°C	II 2 D - 95°C
Degree of protection			IP65	
Ambient temperature			-40°C to +75°C The application is limited also by the temperature range of the valve	-40°C to +40°C
Class of insulation			F (155°C)	
Electrical connection			Special "EEx d" cable gland 1/2" NPT, galvanized steel, with EPDM sealing. (EPR) cable, outside diameter 7.3 ± 0.5 mm	
Elect. Power	**DC**	**Pn** (hot)	8 W	
		P (cold) 20°C	9 W	
	AC	**Pn** (holding)	8 W	
		Attraction cold	32 VA (9 W)	
Voltage / Voltage tolerance			see voltage code table / tolerance -15/ +10% of the nominal voltage	
Solenoid duty			Continuous duty solenoid (ED 100%)	

Weight: 500 g

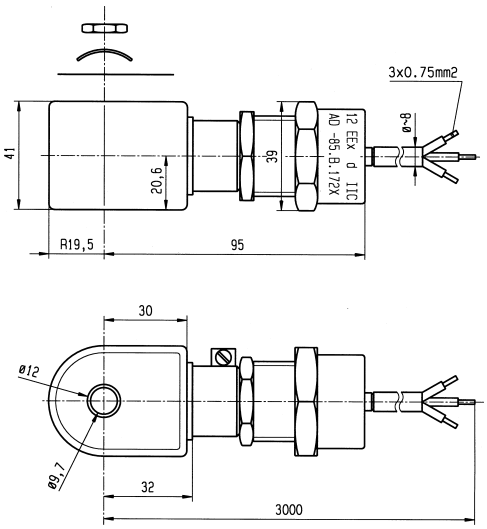

Fuses

The HZ09 electrical part is equipped with a standard thermal cut-off fuse on all models and voltages

This electrical part HZ09 must be connected in series with a safety fuse according to IEC 60127-3.

DC: 24V, 630 mA
AC: 110/50-120/60, 250 mA - 220/50-240/60, 125mA
230/50, 125 mA

Parker Lucifer SA
Fluid Control Division Europe
CH-1227 Carouge-Genève

Tel: +45 63 12 83 00 | Email: ps@hymatik.com | www.hymatik.com | Hvidkaervej 27a, DK-5250 Odense SV, Denmark

3.7 Intrinsically safe electrical parts “i”:

Intrinsic safety

A system or an element of a system in an hazardous area is intrinsically safe when in any circumstance no explosion can be caused by either a spark or other heat source. The power level of an intrinsically safe electrical system is therefore extremely low.

Application

Intrinsically safe valves are recommended or even compulsory where the highest safety level against explosions is required: chemical industry, refineries, mines, on-and off-shore platforms, etc. In addition to the «intrinsic safety» characteristic, a remarkable low power consumption is needed to control such valves. They can be triggered directly from an electronic circuit such as in a computerised system as they require neither relay nor amplifier.

Safety barriers

Each electrical apparatus, e.g. solenoid valves within the hazardous area must be further protected by safety barriers. Lucifer solenoid operators are compatible with commercially available safety barriers (see guidance chart page 39 to 44). In order to determine whether a barrier is compatible, one must be fully aware of its electrical characteristics.

Minimum voltage calculations for proper valve functioning must be made with the total resistance value of barrier, coil (hot) and wiring (total length), and with the maximum ambient temperature.

Electrical suply

Parker Lucifer intrinsically electrical parts may only be fed from:

- **Certified I.S, power supplies or**
- **Through an adequate intrinsic safe safety barrier**
- **Through intrinsically safe Remote I/O**

Installation sketch

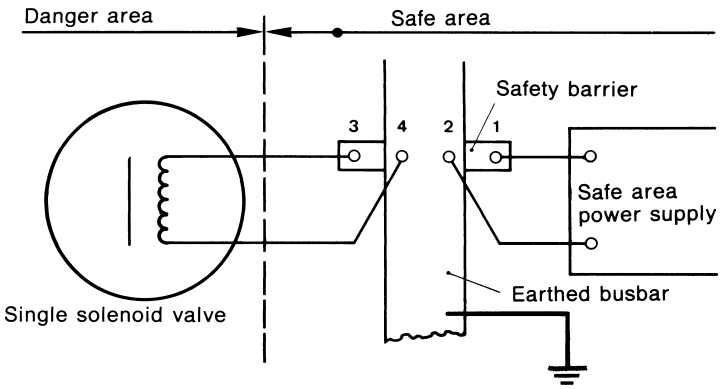

Parker Lucifer SA
Fluid Control Division Europe
CH-1227 Carouge-Genève

Tel: +45 63 12 83 00 | Email: ps@hymatik.com | www.hymatik.com | Hvidkaervej 27a, DK-5250 Odense SV, Denmark

3.7.1 Electrical part 32 mm IS

7



Application: Control of solenoid valves in dangerous areas where explosion-proof protection EEx ia or ib IIC T6 is required.

Benefits: Fully encapsulated assembly comprising a coil, metal armature, three diodes circuit and DIN plug connection.

The encapsulation provides an effective compact housing offering full protection against dust, oil, water, etc.

Small size for ease of mounting in confined space.

All Lucifer valves with the suffix "90" can be fitted with these electrical parts.

These electrical parts conform to the IEC/CENELEC safety standards and comply with European explosive atmosphere 94/9/EC «ATEX» directive.

Reference (without plug) (with plug)		483580.01 or **DZ12** 483960.01 or **DZ13**	483580.03 or **DZ16** 483960.03 or **DZ17**	490880 or **DZ18** 493997 or **DZ19**
Zulassungsnummer		**LCIE 02 ATEX 6065 X**	**AUS 1146 X**	**LCIE/FM -** CSA (pending)
Type of protection	**Gas**	II 1 G - EEx ia IIC T6	Ex ia IIC T6 Classe I - Zone 0	CI. I, Div. I, Gr. A, B, C, D CI. II, Div. I, Gr. E, F, G
	Dust	II 1 D - 80°C		
Degree of protection		IP65 with plug connection		NEMA 4-4X
Ambient temperature		-40°C to +55°C The application is limited also by the temperature range of the valve		+60°C
Class of insulation		F (155°C)		
Electrical connection		The coil is connected with a 2P + E plug according to EN 175301-803 type A - contact 1 is marked as the positive pole +		
Maximum supply voltage		28 VDC – 110 mA		30 VDC – 100 mA
		The minimum operating voltage at maximum +60°C is 14 VDC		
Power **DC**	Minimum	500 mW		500 mW
	Maximum	3 W		3 W
Depending on applied voltage, IS barrier type and resistance of connected cable				
Coil resistance at 20°C **Impedance** **Apparent inductance** **Apparent capacitance**		340 Ω 340 Ω 0 mH 0 µF		
Solenoid duty		Continuous duty solenoid (ED 100%)		

Weight: 160 g (with plug)

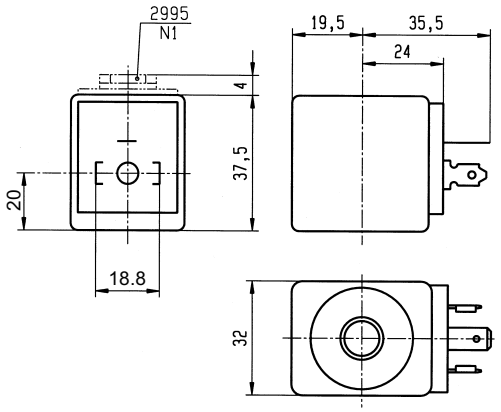

Important

The intrinsically safe supply circuit should have enough capacity in all environmental conditions to assure a **minimum operating current of 35 mA** through the coil.

The minimal holding current is 20 mA

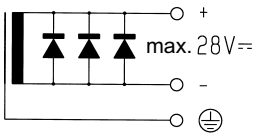

For the barrier compatibility see the corresponding table on pages 39, 40 and 41.

Parker Lucifer SA
Fluid Control Division Europe
CH-1227 Carouge-Genève

Tel: +45 63 12 83 00 | Email: ps@hymatik.com | www.hymatik.com | Hvidkaervej 27a, DK-5250 Odense SV, Denmark

3.7.2 Electrical part 488650.01 or VZ07 and 494035.10 or VZ93

7



Application: Control of solenoid valves in dangerous areas where explosion-proof protection EEx ia or ib IIC T6 is required.

Benefits: Rotatable 360° housing, polyamid with fibreglass housing and cover. Coil, electronic circuits and other elements required for intrinsic safety are completely encapsulated in the housing with epoxy material for shock and corrosion protection.

Small size for ease of mounting in confined space.

All Lucifer valves with the suffix "90" can be fitted with these electrical parts.

These electrical parts conform to the IEC/CENELEC safety standards and comply with European explosive atmosphere directive 94/9/EC «ATEX».

Reference			488650.01 or **VZ07**	*494035.10 or **VZ93**	488650.03 or **VZ31**	490885 or **VZ33**
Approval			**LCIE 02 ATEX 6024 X**		**AUS Ex 137 X**	**LCIE / FM / CSA**
Type of protection		**Gas**	II 1 G - EEx ia IIC T6		Ex ia IIC T6	Cl. I, Div. I, Gr. A, B, C, D
		Dust	II 1 D - 80°C		Classe I - Zone 0	Cl. II, Div. I, Gr. E, F, G
Degree of protection			IP66		IP65	NEMA 4-4X
Ambiant temperature			-40°C to +65°C		-40°C to +65°C	+60°C
			The application is limited also by the temperature range of the valve			
Electrical connection			Cable entry through a cable gland M20 x 1.5. Screw terminals for leads 3 x 1.5 mm² max. Additional earth connection possible with external screw terminal			
Maximum supply voltage			28 VDC – 110 mA		28 VDC – 110 mA	30 VDC – 100 mA
			The minimum operating voltage at maximum +60°C is 11.5 VDC			
Power	**DC**	Minimum	300 mW		300 mW	300 mW
		Maximum	3 W		3 W	3 W
	Depending on applied voltage, IS barrier type and resistance of connected cable					
Coil resistance at 20°C			295 Ω			
Impedance			345 Ω			
Apparent inductance			0 mH			
Apparent capacitance			0 µF			
Solenoid duty			Continuous duty solenoid (ED 100%)			

* with stainless steel fixing kit.

Weight: 500 g.

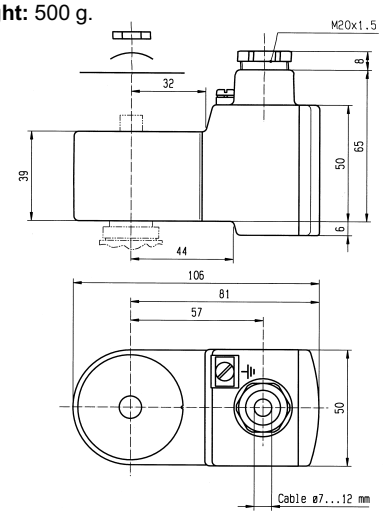

Important

The intrinsically safe supply circuit should have enough capacity in all environmental conditions to assure a minimum operating current of 29 mA through the coil.

The minimal holding current is 20 mA

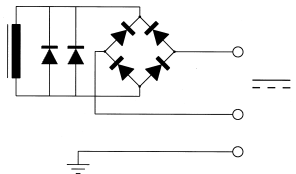

For the barrier compatibility see the corresponding table in pages 39, 40 and 41.

Parker Lucifer SA
Fluid Control Division Europe
CH-1227 Carouge-Genève

Tel: +45 63 12 83 00 | Email: ps@hymatik.com | www.hymatik.com | Hvidkaervej 27a, DK-5250 Odense SV, Denmark

3.7.3 Electrical part 488660.01 or VZ08

7



Application: Control of solenoid valves in dangerous areas where explosion-proof protection EEx ia or ib IIC T6 is required.

Benefits: Rotatable 360° housing, epoxy-coated metal housing and cover. Coil, electronic circuits and other elements required for intrinsic safety are completely encapsulated in the housing with epoxy material for shock and corrosion protection.

Small size for ease of mounting in confined space.

All Lucifer valves with the suffix "90" can be fitted with these electrical parts.

These electrical part conforms to the IEC/CENELEC safety standards and complies with European explosive atmosphere directive 94/9/EC «ATEX».

Reference			488660.01 or **VZ08**	488660.03 or **VZ17**	490890 or **VZ18**
Approval			**LCIE 02 ATEX 6024 X**	**AUS Ex 137 X**	**LCIE / FM / CSA**
Type of protection		**Gas**	II 1 G - EEx ia IIC T6	Ex ia IIC T6 Classe I - Zone 0	Cl. I, Div. I, Gr. A, B, C, D Cl. II, Div. I, Gr. E, F, G
		Dust	II 1 D - 80°C		
Degree of protection			IP67		NEMA 4-4X
Ambiant temperature			-40°C to +65°C The application is limited also by the temperature range of the valve		+60°C
Electrical connection			Fixed and potted dual-core (2 x 1mm˝), blue connection cable, entry cable gland M20 x 1.5. Additional earth connection possible with external screw terminal		
Maximum supply voltage			28 VDC – 110 mA The minimum operating voltage at maximum +60°C is 11.5 VDC		30 VDC – 100 mA
Power	**DC**	Minimum	300 mW		300 mW
		Maximum	3 W		3 W
	Depending on applied voltage, IS barrier type and length resistance of connected cable				
Coil resistance at 20°C **Impedance** **Apparent inductance** **Apparent capacitance**			295 Ω 345 Ω 0 mH 0 µF		
Solenoid duty			Continuous duty solenoid (ED 100%)		

Weight: 500 g.

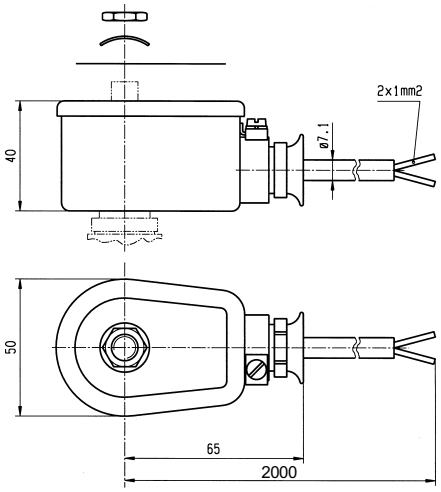

Important

The intrinsically safe supply circuit should have enough capacity in all environmental conditions to assure a **minimum operating current of 29 mA** through the coil.

The minimal holding current is 20 mA

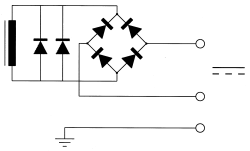

For the barriers compatibility see the corresponding table in pages 39, 40 and 41.

Parker Lucifer SA
Fluid Control Division Europe
CH-1227 Carouge-Genève

Tel: +45 63 12 83 00 | Email: ps@hymatik.com | www.hymatik.com | Hvidkaervej 27a, DK-5250 Odense SV, Denmark

3.7.4 Electrical part 488670.01 or VZ09

7



Application: Control of solenoid valves in dangerous areas where explosion-proof protection EEx ia or ib IIC T6 is required.

Benefits: Rotatable 360° housing, epoxy-coated metal housing and cover. Coil, electronic circuits and other elements required for intrinsic safety are completely encapsulated in the housing with epoxy material for shock and corrosion protection.

Small size for ease of mounting in confined space.

All Lucifer valves with the suffix ''90'' can be fitted with these electrical parts

These electrical part conforms to the IEC/CENELEC safety standards and complies with European explosive atmosphere directive 94/9/EC «ATEX».

Reference			488670.01 or **VZ09**	490895 or **VZ20**
Approval			**LCIE 02 ATEX 6024 X**	**LCIE / FM / CSA**
Type of protection		**Gas**	II 1 G - EEx ia IIC T6	Cl. I, Div. I, Gr. A, B, C, D
		Dust	II 1 D - 80°C	Cl. II, Div. I, Gr. E, F, G
Degree of protection			IP67	NEMA 4-4X
Ambiant temperature			-40°C to +65°C	+60°C
			The application is limited also by the temperature range of the valve	
Electrical connection			DIN standard plug interface 2P + T (DIN 43650 A) with Pg 9 cable gland.	
Maximum supply voltage			28 VDC – 110 mA	30 VDC – 100 mA
			The minimum operating voltage at maximum +60°C is 11.5 VDC	
Power	**DC**	Minimum	300 mW	300 mW
		Maximum	3 W	3 W
	Depending on applied voltage, IS barrier type and resistance of connected cable			
Coil resistance at 20°C **Impedance** **Apparent inductance** **Apparent capacitance**			295 Ω 345 Ω 0 mH 0 µF	
Solenoid duty			Continuous duty solenoid (ED 100%)	

Weight: 500 g.

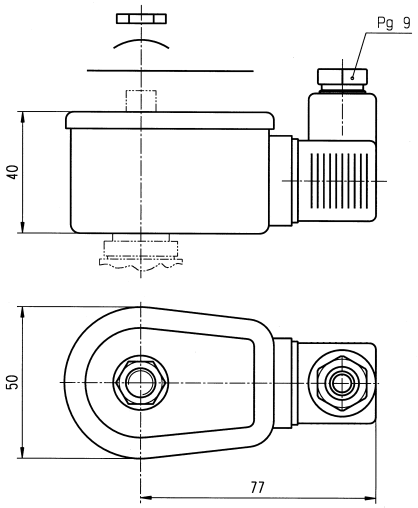

Important

The intrinsically safe supply circuit should have enough capacity in all environmental conditions to assure a **minimum operating current of 29 mA** through the coil.

The minimal holding current is 20 mA

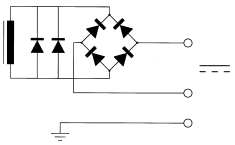

For the barriers compatibility see the corresponding table in pages 39, 40 and 41.

Parker Lucifer SA
Fluid Control Division Europe
CH-1227 Carouge-Genève

Tel: +45 63 12 83 00 | Email: ps@hymatik.com | www.hymatik.com | Hvidkaervej 27a, DK-5250 Odense SV, Denmark

3.7.5 Electrical parts 482160.01 or VZ95 and 482870.01 or VZ23

12



Application: Control of solenoid valves in dangerous areas where explosion-proof protection EEx ia IIB or IIC T6 is required.

Benefits: Rotatable 360° housing, polyamid with fibreglass housing and cover. Coil, electronic circuits and other elements required for intrinsic safety are completely encapsulated in the housing with epoxy material for shock and corrosion protection.

Small size for ease of mounting in confined space.

All Lucifer valves labelled ‘‘033X’’ with manual-reset can be fitted with these electrical parts.

These electrical parts conform to the IEC/CENELEC safety standards and comply with European explosive atmosphere directive 94/9/EC «ATEX».

Reference			482160.01 or **VZ95**	482870.01 or **VZ23**	482870.03 or **VZ24**	492335 or **VZ30**
Approval			**LCIE 02 ATEX 6024 X**		**AUS Ex 137 X**	**LCIE / FM / CSA**
Type of protection	**Gas**		II 1 G - EEx ia IIB T6	II 1 G - EEx ia IIC T6	EEx ia IIC T6 Classe I - Zone 0	Cl. I, Div. I, Gr. A, B, C, D
	Dust		II 1 D - 80°C			Cl. II, Div. I, Gr. E, F, G
Degree of protection			IP66		IP65	NEMA 4-4X
Ambiant temperature			-40°C to +65°C The application is limited also by the temperature range of the valve			+60°C
Electrical connection			Cable connection through a stainless steel cable gland M20 x 1.5 allowing use of cable diameter from 10 to 12 mm. Additional earth connection possible with external screw terminal			
Maximum supply voltage			28 VDC – 280 mA	28 VDC – 110 mA	28 VDC – 110 mA	30 VDC – 100 mA
Power	**DC**	Minimum	300 mW			300 mW
		Maximum	3 W			3 W
	Depending on applied voltage, IS barrier type and resistance of connected cable					
Coil resistance at 20°C **Impedance** **Apparent inductance** **Apparent capacitance**			295 Ω 345 Ω 0 mH 0 µF			
Solenoid duty			Continuous duty solenoid (ED 100%)			

Weight: 500 g.

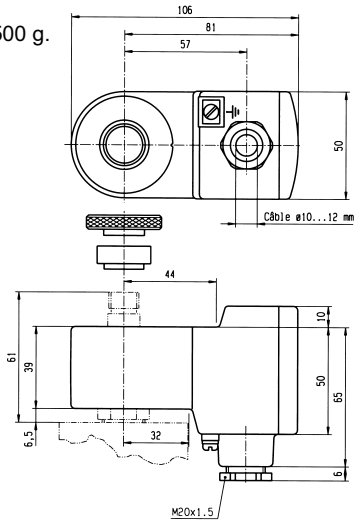

Important

The required minimal holding current is 25 mA

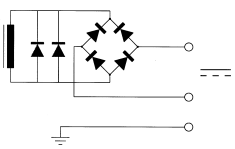

For the barriers compatibility see the corresponding table in pages 39, 40 and 41.

Parker Lucifer SA
Fluid Control Division Europe
CH-1227 Carouge-Genève

Tel: +45 63 12 83 00 | Email: ps@hymatik.com | www.hymatik.com | Hvidkaervej 27a, DK-5250 Odense SV, Denmark

3.7.6 Electrical part 482660 or VZ11 with booster

9



Application: Control of solenoid valves in dangerous areas where an explosion-proof protection EEx ib IIB or IIC T6 is required.

Benefits: Rotatable 360° housing, polyamid with fibreglass housing and cover. Coil, electronic circuits and other elements required for intrinsic safety are completely encapsulated in the housing with epoxy material for shock and corrosion protection.

Small size for ease of mounting in confined space.

All Lucifer valves suitable for CPR/Offshore application can be fitted with these electrical parts (except type U033X).

These electrical parts conform to the IEC/CENELEC safety standards and comply with European explosive atmosphere directive 94/9/EC «ATEX».

Reference			482660 or **VZ11**	483330.01 or **VZ12**	483330.03 or **VZ25**	490860 or **VZ28**
Approval			**LCIE 02 ATEX 6024 X**		**AUS Ex 137 X**	**LCIE / FM / CSA**
Type of protection	**Gas**		II 2 G - EEx ib IIB T6	II 2 G - EEx ib IIC T6	EEx ib IIC T6 Classe I - Zone 1	Cl. I, Div. I, Gr. A, B, C, D
	Dust		II 2 D - 80°C			Cl. II, Div. I, Gr. E, F, G
Degree of protection			IP66		IP65	NEMA 4-4X
Ambiant temperature			-40°C to +75°C The application is limited also by the temperature range of the valve			+60°C
Electrical connection			Cable connection through a stainless steel cable gland M20X1.5 allowing use of cable diameter from 10 to 12 mm. Additional earth connection possible with external screw terminal			
Maximum supply voltage			28 VDC – 280 mA		28 VDC – 110 mA	30 VDC – 100 mA
			The minimum operating voltage is 21.6 VDC			
Power	**DC**	Minimum	300 mW			300 mW
		Maximum	3 W			3 W
	Depending on applied voltage, IS barrier type and resistance of connected cable					
Coil resistance at 20°C **Impedance** **Apparent inductance** **Apparent capacitance**			23 Ω 50 Ω 0 mH 0 µF			
Response time			2 – 4 s			
Solenoid duty			Continuous duty solenoid (ED 100%)			

Weight: 500 g.

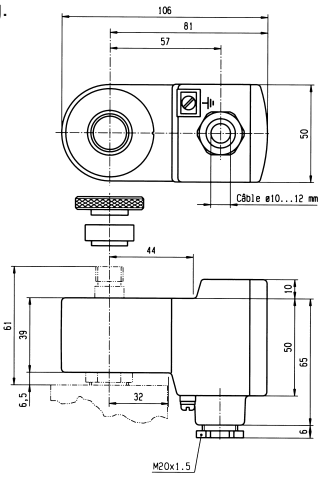

Important

The intrinsically safe supply circuit should have enough capacity under all environmental conditions to assure a **minimum operating current of 45 mA** through the coil.

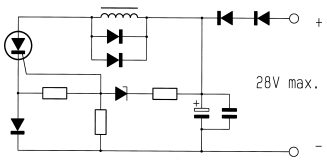

For the barriers compatibility see the corresponding table in pages 42, 43 and 44.

Parker Lucifer SA
Fluid Control Division Europe
CH-1227 Carouge-Genève

Tel: +45 63 12 83 00 | Email: ps@hymatik.com | www.hymatik.com | Hvidkaervej 27a, DK-5250 Odense SV, Denmark

3.7.7 Electrical parts 492965.01 or VZ91 with “Booster”.

9



Application: Control of solenoid valves in dangerous areas where an explosion-proof protection EEx ia IIC T6 is required.

Benefits: Rotatable 360° housing, polyamid with fibreglass housing and cover. Coil, electronic circuits and other elements required for intrinsic safety are completely encapsulated in the housing with epoxy material for shock and corrosion protection.

Small size for ease of mounting in confined space.

All Lucifer valves suitable for CPR/Offshore application can be fitted with these electrical parts (except type U033X).

These electrical parts conform to the IEC/CENELEC safety standards and comply with European explosive atmosphere directive 94/9/EC «ATEX».

Reference			492965.01 or **VZ91** - stainless steel fixation 492965.02 or **VZ92** - plastic fixation
Approval			**LCIE 02 ATEX 6066 X**
Type of protection	**Gas**		II 1 G - EEx ia IIC T6
	Dust		II 1 D - 80°C
Degree of protection			IP66
Ambiant temperature			-40°C to +65°C The application is limited also by the temperature range of the valve
Electrical connection			Cable connection through a plastic cable gland M20 x 1.5 allowing use of cable diameter from 6 to 12 mm. Additional earth connection possible with external screw terminal
Maximum supply voltage			28 VDC – 110 mA
Power	**DC**	Minimum	0.3 W (with 13 VDC)
		Maximum	2.3 W (with 24 VDC)
	Depending on applied voltage, IS barrier type and resistance of connected cable		
Line check			4 mA or 5 VDC max
Coil resistance at 20°C **Impedance** **Apparent inductance** **Apparent capacitance**			85 Ω 275 Ω (with 13 VDC) – 260 Ω (with 24 VDC) 0 mH 0 µF
Response time			2 – 4 s
Solenoid durty			Continuous duty solenoid (ED 100%)

Weight: 500 g.

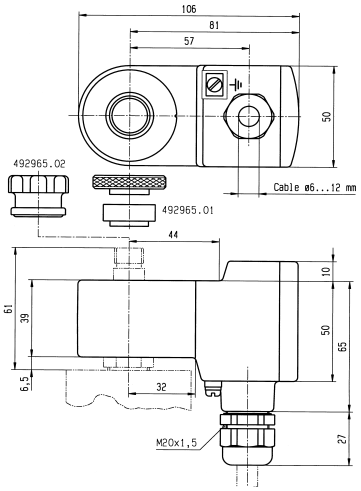

Important

The intrinsically safe supply circuit should have enough capacity under all environmental conditions to assure a **minimum operating current of 20 mA** through the coil.

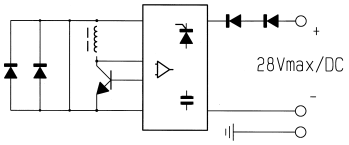

For the barriers compatibility see the corresponding table in pages 42, 43 and 44.

Parker Lucifer SA
Fluid Control Division Europe
CH-1227 Carouge-Genève

Tel: +45 63 12 83 00 | Email: ps@hymatik.com | www.hymatik.com | Hvidkaervej 27a, DK-5250 Odense SV, Denmark

IS Standard coils parameters

IS- STANDARD ELECTRICAL PARTS								
Type of IS-protectiom		EEx ia IICT6	EEx ia IICT6	EEx ia IIC T6	Ex ia	EEx ia IIB T6	EEx ia IIC T6	Ex ia
Order references		488650.01/03 488660.01/03 488670.01/03	490885 490890 490895	483580.01/03 483960.01/03	490880 493997	482160,01	482870,01	492335
Certified by		LCIE/AUS	LCIE/FM/CSA	PTB/AUS	LCIE/FM	LCIE	LCIE	LCIE/FM/CSA
Function parameters	**Resistance of coil winding at 20°C** (for information only)	295 Ohm	295 Ohm	340 Ohm	340 Ohm	295 Ohm	295 Ohm	295 Ohm
	Impedance of electrical part	345 Ohm	345 Ohm	340 Ohm	340 Ohm	345 Ohm	345 Ohm	345 Ohm
	Minimum voltage required for functionning at 60°C	11.5 V	11.5 V	14 V	14 V	manual reset	manual reset	manual reset
	Minimum current required for functionning (attraction)	**29 mA**	**29 mA**	**35 mA**	**35 mA**	**manual reset**	**manual reset**	**manual reset**
	Minimum current required for holding	20 mA	20 mA	20 mA	20 mA	25 mA	25 mA	25 mA
	Inductance [L] of coil (mH apparent)	0	0	0	0	0	0	0
	Capacitance [C] of coil (µF apparent)	0	0	0	0	0	0	0
	Ambient temperatures	(-40 à +65°C)	(-40 à +65°C)	(-40 à +55°C)	(-40 à +55°C)	(-40 à +65°C)	(-40 à +65°C)	(-40 à +65°C)
Security parameters	**Maximum admissible voltage/current**	28V / 110mA - 0.77 W 27V / 120mA - 0.81 W 26V / 135 mA - 0.88 W 25V / 150 mA - 0.94 W 24V / 170 mA - 1.2 W	30V/100mA 28V/330 Ohm -	28V / 110mA - 0.77 W 27V / 120mA - 0.81 W 26V / 135 mA - 0.88 W 25V / 150 mA - 0.94 W 24V / 170 mA - 1.2 W	30V / 100mA - -	28V / 280mA - 1.96 W 27V / 320mA - 2.16 W 26V / 350 mA - 2.27 W 25V / 390 mA - 2.43 W 24V / 430 mA - 2.58 W	28V / 110mA - 0.77 W 27V / 120mA - 0.81 W 26V / 135 mA - 0.88 W 25V / 150 mA - 0.94 W 24V / 170 mA - 1.2 W	30V / 100mA 28V/300Ohm -

Cable resistance (there and back): 0.6 mm_ - 59 Ohm/km; 1.0 mm_ - 35 Ohm/km: 1.5 mm_ - 24 Ohm/km . Assign approx. 30 Ohm for line-resistance.

Parker Lucifer SA
Fluid Control Division Europe
CH-1227 Carouge-Geneve

Tel: +45 63 12 83 00 | Email: ps@hymatik.com | www.hymatik.com | Hvidkaervej 27a, DK-5250 Odense SV, Denmark

Guidance chart for IS-barriers, Isolating interface units and Remote I/O for Standard IS -coils

TYPE	MANUFACTURER	REFERENCE	EEx..	RESIST. of barrier in Ohm	IS ELECTRICAL PARTS						
					EEx ia IIC T6 LCIE/AUS 488650.01/03 488660.01/03 488670.01/03	EEx ia IIC T6 LCIE/FM/CSA 490885 490890 490895	EEx ia IIC T6 LCIE/AUS 483580.01/03 483960,01	Exia LCIE/FM/CSA 490880 493997	EEx ia IIB T6 LCIE 482160,01	EEx ia IIC T6 LCIE 482870,01	Ex ia LCIE/FM/CSA 492335
Shunt Diode	MTL	7128P	ia	275					x		
Safety barriers		728,7028	ia	332	x	x	x	x	x	x	x
(passive)											
	Pepperl & Fuchs	Z 728	ia	300	x	x	x	x	x	x	x
		Z779	ia	300	x	x	x	x	x	x	x
	STAHL	9001/01-252-100-14	ia	252	x	x	27Vmin./LRmax 3	27Vmin./LRmax 3	x	x	x
		9001/01-280-100-10	ia	280	x	x	24Vmin./LRmax 3	24Vmin./LRmax 3	x	x	x
		9001/01-280-110-10	ia	255	x		24Vmin./LRmax 3		x	x	
		9002/13-280-100-04	ia	340	24Vmin./LRmax3	24Vmin./LR3	27Vmin./LRmax 3	27Vmin./LRmax 3	24Vmin./LRmax 3	24Vmin./LRmax 3	24Vmin./LRmax 3
Galvanic Isolated	A puissance 3	NAEV 22-140	ia		x		x		x	x	
Interface Units		NAEV 26 -100	ia		x		x		x	x	
(actives)											
and Remote I/O	ABB	V17132-54	ib		x		LRmax 5		x	x	
		V17132-55	ib		x				x	x	
		V17132-61	ia		x				x	x	
		DO 890	ib		x		x		x	x	
		S900- DO4-Ex	ib		x		x		x	x	
	BARTEC	07-7331-2301/1000	ia		x				x	x	
		07-7331-2301/1100	ia		x		x		x	x	
	BRADLEY	FEX-EX 24V	ia		x	x	x	x	x	x	
	COOPER	LB 2101	ia		x	x	LRmax15	LRmax15	x	x	x
		LB 2105	ia		x	x	x	x	x	x	x
		LB 2112	ia		x	x	x	x	x	x	x
	ELCON	1881 / 1882	ia		x	x	x	x	x	x	x
		471 / 472	ia		x	x	x	x	x	x	x
		2871/2872	ia		x	x	x	x	x	x	x
		2875/2876	ia		x	x	x	x	x	x	x
	GEORGIN	AVB 122	ia		x		x		x	x	
		AVB 125	ia		x		x		x	x	
		AVB 128	ia		x		x		x	x	
	HIMA	F3328A	ib		x		LRmax 5		x	x	
		F3335	ib		x				x	x	
		H4007	ib		x		x		x	x	

Conditions: ED 100%, Max. ambient temp. 60°C. Coils marked with **x**: Suitable for > 30 Ohm addiditional Line Resistance. LRmax = max.additional Line Resistance in Ohm with min. voltage if required.

Parker Lucifer SA
Fluid Control Division Europe
CH-1227 Carouge-Geneve

Tel: +45 63 12 83 00 | Email: ps@hymatik.com | www.hymatik.com | Hvidkaervej 27a, DK-5250 Odense SV, Denmark

Guidance chart for IS-barriers, Isolating interface units and Remote I/O for Standard IS -coils

TYPE	MANUFACTURER	REFERENCE	EEx..	RESIST. of barrier in Ohm	IS ELECTRICAL PARTS						
					EEx ia IIC T6 LCIE/AUS 488650.01/03 488660.01/03 488670.01/03	EEx ia IIC T6 LCIE/FM/CSA 490885 490890 490895	EEx ia IIC T6 LCIE/AUS 483580.01/03 483960,01	Ex ia LCIE/FM/CSA 490880	EEx ia IIB T6 LCIE 482160,01	EEx ia IIC T6 LCIE 482870,01	Ex ia LCIE/FM/CSA 492335
Galvanic Isolated	**MTL**	3021, 4021, 4021S	ia		x		x		x	x	
Interface Units		3022	ia						x		
(actives)		4023	ia						x		
and Remote I/O		4024	ia		x		x		x	x	
		4025	ia		x	x	x	x	x	x	x
		5021, 5023, 5024	ia		x		x		x	x	
		5025	ia		x		x		x	x	x
	Pepperl & Fuchs	EGA-041-3	ia		x	x	x	x	x	x	x
		KFD2-SD-Ex1.36	ia						x		
		KFD2-SD-Ex1.48	ia		x		x		x	x	x
		KFD2-SL-Ex1.36	ia						x		
		KFD2-SL2-Ex1.LK	ia		x		x		x	x	
		KFD2-SL2-Ex2	ia		x		x		x	x	
		KFD2-SL-Ex1.48	ia		x		x		x	x	x
		KSD2-BO-Ex	ia		x	x	x	x	x	x	x
		RSD-BO-Ex4	ib		x		x		x	x	x
	STAHL	9311/52-11-10	ia		x	x	25Vmin/LRmax 3	25Vmin./LRmax 3	x	x	x
		9111/63-11-00	ia		x	x	25Vmin./LRmax3	25Vmin./LRmax 3	x	x	x
		9351/10-15-10	ia		x	x			x	x	x
		9351/10-16-10	ia		x		x		x	x	
		9351/10-17-10	ia						x		
		9381/10-187-050-10	ib		x	x	x	x	x	x	x
		9381/10-246-055-10	ib		x	x	x	x	x	x	x
		9381/10-246-070-10	ib		x	x	x	x	x	x	x
		9475/12-04-11	ia		x	x			x	x	x
		9475/12-04-21	ia/ib		x		x		x	x	
	TURCK	MK72-S01-Ex	ib						x	x	
		MK72-S02-Ex	ib						x	x	
		MK72-S04-Ex	ib		x		x		x	x	
		MK72-S05-Ex	ib		x				x	x	
		MK72-S06-Ex	ib		x		x		x	x	
		MK72-S07-Ex	ib		x				x	x	
		MK72-S12-Ex	ia		x		x		x	x	
		MC72-41	ia		x		x		x	x	
		MC72-43	ia		x		x		x	x	

Conditions: ED 100%, Max. ambient temp. 60°C. Coils marked with **x**: Suitable for > 30 Ohm addiditional Line Resistance. LRmax = max.additional Line Resistance in Ohm with min. voltage if required.

Parker Lucifer SA
Fluid Control Division Europe
CH-1227 Carouge-Geneve

Tel: +45 63 12 83 00 | Email: ps@hymatik.com | www.hymatik.com | Hvidkaervej 27a, DK-5250 Odense SV, Denmark

IS Booster coils parameters

IS - BOOSTER ELECTRICAL PARTS							
Type of IS-protection		**EEx ia IIB T6**	**EEx ia IIC T6**	**EEx ib IIB T6**	**EEx ib IIC T6**	**Ex ia**	
Order reference		**492965.01/02**		**482660**	**483330,01**	**490860**	
Certified by		**LCIE**		**LCIE**	**LCIE**	**LCIE/FM/CSA**	
Function parameters	**Resistance of coil winding at 20°C** (for information only)	85 Ohm		23 Ohm	23 Ohm	23 Ohm	
	Impedance of electrical part	275 Ohm/13V		50 Ohm *	50 Ohm *	50 Ohm *	
	Minimum voltage required for functionning at 60°C	13 V		21.6 V	21.6 V	21.6 V	
	Minimum current required for functionning (attraction)	-		-	-	-	
	Minimum current required for functionning (holding)	**20 mA**		**45 mA**	**45 mA**	**45 mA**	
	Inductance [L] of coil (mH apparent)	-		0	0	0	
	Capacitance [C] of coil (µF apparent)	-		0	0	0	
	Ambient temperatures	-40 °C to +65 °C		-40 °C to +65 °C	-40 °C to +65 °C	+65°C	
	Maximum current for continuous line check	4 mA		0	0	0	
Security parameters	**Maximum admissible voltages /current**	28V / 280mA - 1.96 W	28V / 110mA - 0.77 W	28V / 280mA - 1.96 W	28V / 110mA - 0.77 W	see certif. FM/CSA.	
		27V / 320mA - 2.16 W	27V / 120mA - 0.81 W	27V / 320mA - 2.16 W	27V / 120mA - 0.81 W		
		26V / 350 mA - 2.27 W	26V / 135 mA - 0.88 W	26V / 350 mA - 2.27 W	26V / 135 mA - 0.88 W		
		25V / 390 mA - 2.43 W	25V / 150 mA - 0.94 W	25V / 390 mA - 2.43 W	25V / 150 mA - 0.94 W		
		24V / 430 mA - 2.58 W	24V / 170 mA - 1.2 W	24V / 430 mA - 2.58 W	24V / 170 mA - 1.2 W		

Cable resistance (there and back): 0.6 mm_ - 59 Ohm/km; 1.0 mm_ - 35 Ohm/km; 1.5 mm_ - 24 Ohm/km. Assign 30 Ohm for line-resistance.

*** Attention : For function tests without barrier, only with in series connected resistance of min. 170 Ohm.**
Assign approx. 30 Ohm for line - resistance.

Parker

373

Parker Lucifer SA
Fluid Control Division Europe
CH-1227 Carouge-Geneve

Tel: +45 63 12 83 00 | Email: ps@hymatik.com | www.hymatik.com | Hvidkaervej 27a, DK-5250 Odense SV, Denmark

hymatik

Guidance chart for IS-barriers, Isolating Interface Units and Remote I/O for Booster IS -coils

TYPE	MANUFACTURER	REFERENCE	EEx..	RESIST. of barrier in Ohm	IS Booster coil			
					EEx ia IIC T6 492965.01/02	EEx ib IIB T6 482660	EEx ib IIC T6 483330,01	Ex ia 490860
					LCIE	LCIE	LCIE	LCIE/FM/CSA
Shunt Diode	MTL	728	ia		x			
Safety Barriers		728,7028	ia		x			
(passive)	Pepperl & Fuchs	Z 728	ia		x	x	x	
		Z 779	ia		x			
	STAHL	9001/01-252-100-14	ia	252	x	x	x	
		9001/01-280-100-10	ia	280	x	x	x	x
		9001/01-280-110-10	ia	255	x	x	x	
		9002/13-280-100-04	ia	340	17Vmin/LRmax30	26Vmin/LRmax3	26Vmin/LRmax3	26Vmin/LRmax3
Galvanic Isolated	A puissance 3	NAEV 26 - 1002-140	ia		x	x	x	
Interface Units	ABB	V171132-54	ib		x			
(active)		V171132-55	ib		x			
and Remotes I/O		V171132-61	ia		x			
		DO 890	ib		x	x	x	
		S900-DO4-Ex	ib		x			
	BARTEC	07-7331-2301/1000	ia		x			
		07-7331-2301/1100	ia		x			
	BRADLEY	FEX-EX 24V	ia		x	x	x	x
	COOPER	LB 2101	ia		x			
		LB 2105	ia		x	x	x	x
		LB 2112	ia		x	x	x	x
	ELCON	1881 / 1882	ia		x	x	x	x
		471 / 472	ia		x	x	x	x
		2871/2872	ia		x	x	x	x
		2875/2876	ia		x	x	x	x
	GEORGIN	AVB 122	ia		x	x	x	
		AVB 125	ia		x	x	x	
		AVB 128	ia		x	x	x	
	Hima	F3328A	ib		x	x	x	
		F3335	ib		x	x	x	
		H4007	ib		x	x	x	
	MTL	3021, 4021, 4021S	ia		x	x	x	x
		3022	ia			x		x
		4023	ia			x		
		4024	ia		x	x	x	x
		4025	ia		x	x	x	x
		5021, 5025	ia		x			

Conditions: ED 100%, Max. ambient temp. 60°C. Coils marked with x: Suitable for > 30 Ohm addiditional Line Resistance.
LRmax = max.additional Line Resistance in Ohm with min. voltage if required.

Parker Lucifer SA
Fluid Control Division Europe
CH-1227 Carouge-Geneve

Tel: +45 63 12 83 00 | Email: ps@hymatik.com | www.hymatik.com | Hvidkaervej 27a, DK-5250 Odense SV, Denmark

Guidance chart for IS-barriers, Isolating Interface Units and Remote I/O for Booster IS -coils

TYPE	MANUFACTURER	REFERENCE	EEx..	RESIST. of barrier in Ohm	IS Booster coil			
					EEx ia IIC T6 492965.01/02	EEx ib IIB T6 482660	EEx ib IIC T6 483330,01	Exia 490860
					LCIE	LCIE	LCIE	LCIE/FM/CSA
Galvanic Isolated	Pepperl & Fuchs	EGA-041-3	ia		x			
Interface Units		KFD2-SD-Ex1.36	ia			x		
(active)		KFD2-SL-Ex1.36	ia			x		
and Remotes I/O		KFD2-SD-Ex1.48	ia		x			
		KFD2-SL-Ex1.48	ia		x			
		KFD2-SL-Ex1.48.90A	ia		x	x	x	x
		KFD2-SL-Ex1.48.90A	ia		x	x	x	x
		KFD2-SL2-Ex1.LK	ia		x			
		KFD2-SL2-Ex2	ia		x			
		KSD2-BO-Ex	ia		x			
		RSD-BO-Ex4	ib		x			
		RSD-VO-Ex8	ib		x			
	PULS	5RD00-0AB0	ib					
	STAHL	9311/52-11-10	ia		15Vmin/LRmax30	x	x	
		9111/63-11-00	ia		15Vmin/LRmax30	x	x	
		9351/10-15-10	ia		x	x	x	
		9351/10-16-10	ia		x	x	x	
		9351/10-17-10	ia			x		
		9381/10-187-050-10	ib		x		x	
		9381/10-246-055-10	ib		x	x	x	
		9381/10-246-070-10	ib		x	x	x	
		9465/12-08-11	ib		x			
		9475/12-04-31	ib		x			
		9475/12-08-51	ib		x			
	Turck	MK72-S01-Ex	ib		x			
		MK72-S02-Ex	ib		x			
		MK72-S04-Ex	ib		x			
		MK72-S05-Ex	ib		x			
		MK72-S06-Ex	ib		x			
		MK72-S07-Ex	ib		x			
		MK72-S09-Ex	ia			x	x	
		MK72-S12-Ex	ia		x			
		MC72 - 41	ia		x			
		MC72 - 43	ia		x			
		MC72 - 44	ia		x			

Conditions: ED 100%, Max. ambient temp. 60°C. Coils marked with x: Suitable for > 30 Ohm addiditional Line Resistance.
LRmax = max.additional Line Resistance in Ohm with min. voltage if required.

Parker Lucifer SA
Fluid Control Division Europe
CH-1227 Carouge-Geneve

Tel: +45 63 12 83 00 | Email: ps@hymatik.com | www.hymatik.com | Hvidkaervej 27a, DK-5250 Odense SV, Denmark

Accessories

	**DIN plug connector according to DIN 43650 AB Pg 9 2P+T** No. 481043 Electrical connection suitable for all 22 mm coils (e.g. 488980, 481180)
	**DIN plug connector according to DIN 43650 AA Pg 9 2P+T** No. 486586 for standard version No. 492645 for high temperature version Electrical connection suitable for all 32 mm coils (e.g. 481865, 492425)
	**Stainless steel assembly kit** Nut No. 482213 M14 x 1+ Ring No. 482214 + O-Ring No. 483917 Coil assembly kit for offshore electrical parts. (e.g. 482160.01, 482870.01, 483330.01, 492210, 492965.01)
	**Cable gland** No. 493841 - M20x1.5 - EEx ia IIC Electrical connection and mooring cable with 6 to 12 mm diameter, for electrical parts approved ‘‘me’’, ‘‘ia’’. (e.g. 492965...)
	**Cable gland** No. 493426 - 1/2"-14 NPT Electrical connection and mooring cable with 6 to 12 mm diameter, for flameproof approved electrical parts. (e.g. 493640)

Parker Lucifer SA
Fluid Control Division Europe
CH-1227 Carouge-Genève

Tel: +45 63 12 83 00 | Email: ps@hymatik.com | www.hymatik.com | Hvidkaervej 27a, DK-5250 Odense SV, Denmark

Voltage code		A1	A2	A4	A5	0A	A7	3D	F4	A9	B2	K8	6J	B7	J3	B8	7J	S2	4K	P0	S4	P2	P3	1P	S5	0P	R5	P9	3P	S6	S2	Q3	Q1	5P	C1	C2	N7	L8	C4	C5	C7
Coils / Electrical parts		12/50	24/50	48/50	110/50	110/50-115/50	220/50	220/50-230/50	230/50	380/50	24/60	115/60	110/60-115/60	220/60	230/60	240/60	220/60-230/60	200/60-230/60	220/60-240/60	24/50-24/60	48/50-48/60	110/50-60	110/50-120/60	110-115/50,	110-115/50,	100/50, 115/60	220/50-60	230/50-60	220-230/50-60	220-240/50-	220/50-230/60	220/50-240/60	240/50-60	380/50-440/60	12/DC	24/DC	28/DC	30/DC	48/DC	110/DC	220/DC
Ref.	Code																																								
Coils																																								
481000	EZ01		●	●		●		●			●		●						●															●	●	●			●	●	●
481044	EZ91		●		●		●		●	●	●			●												●				●										
481180	DA03		●			●		●																												●					
481865	DZ02		●	●	●			●		●	●	●			●																			●	●			●	●	
482730	DZ90		●			●		●				●																							●				●		
482740	DZ10																																			●						
483510	DZ06																			●	●				●					●											
483520	EZ90																			●										●											
483590	DA05																			●	●				●					●											
484990	MZ01																			●	●			●					●												
485100	EZ02		●			●		●																												●						
485400	MZ02																																		●	●			●	●	●
486265	EZ92		●		●		●		●	●				●				●								●				●				●	●			●		
488980	DA01		●	●		●		●			●		●				●																	●	●			●	●	
491514	D400										●												●								●			●	●					
492425	DZ08		●		●				●																										●						
492453	DZ04		●	●	●			●		●																									●	●					
Electrical parts																																									
482160.01	VZ22																																				●				
482605	VA01		●			●		●																												●				●	
482606	VA02		●	●		●		●			●		●				●																	●	●			●	●	
482606.10	VA12							●																												●					
482606.160	VA07							●																												●					
482660	VZ11																																				●				
482870.01	VZ23																																				●				
483250	HZ08		●	●	●		●																												●				●	●
483270	HZ19																			●	●			●					●						●	●			●	●	
483330.01	VZ12																																				●				
483371	HZ06	●	●	●	●		●		●										●																●	●			●	●	
483371.01	HZ14																																			●				●	●
483371.05	HZ15		●	●					●																										●	●			●	●	
483580.01	DZ12																																				●				
488650.01	VZ07																																				●				
488660.01	VZ08																																				●				
488670.01	VZ09																																				●				
490880	DZ18																																				●				
490885	VZ33																																				●				
490890	VZ18																																				●				
490895	VZ20																																				●				
491117	VZ04																																			●					
492070	VZ01																			●		●					●	●				●		●	●			●	●	
492070.60	VZ96																											●							●						
492190	VZ03																			●		●					●	●				●			●				●	●	●
492190.05	VZ95																											●							●						
492190.10	VZ90																										●								●						
492200	VZ13																																			●						
492210	VZ26																																			●						
492270	VZ02																			●							●						●								
492300	VZ14																			●		●					●						●		●				●	●	
492310	VZ27																			●							●								●	●			●	●	
492335	VZ30																																				●				
492370	VZ05																										●									●						
492390	VZ06																										●									●						
492670	HZ05		●	●	●				●							●																		●	●			●	●	
492670.10	HZ90								●																											●						
492670.160	HZ91								●																											●						
492965.01	VZ91																																				●				
492965.02	VZ92																																				●				
493640	HZ09								●																							●				●			●		
494035.10	VZ93																																				●				
494040	HZ23		●			●		●																												●					

Parker Lucifer SA
Fluid Control Division Europe
CH-1227 Carouge-Genève

Tel: +45 63 12 83 00 | Email: ps@hymatik.com | www.hymatik.com | Hvidkaervej 27a, DK-5250 Odense SV, Denmark

Part 4: Explosive environments

4.1. Introduction

Current European regulations concerning electrical equipment for potentially explosive environments are based on optional and partial European directives which require regular modification in the form of application or adaptation directives in order to keep pace with technical developments.

The basic European text in this field, directive **76/117/EC**, which allow the free circulation of goods within the European Union, provides the general framework for the present regulations.

Electrical equipment for use in potentially explosive environments is certified by a government-approved body when it meets relevant European standards (EN 50014 and upwards) covering each type of protection (**d, i, e, m, p**, etc.). Such equipment is then issued with a **European certificate of conformity and control**, entitling it to carry the distinctive mark:



This mark opens the way for trading within the European Union and occasionally beyond.

This system has now been in operation for more than 15 years. Although largely beneficial, it has revealed certain drawbacks, notably a lack of flexibility and the absence of a global concept for safety. It has now been completely revised by the **new European directive 94/9/EC from March 23, 1994**.

The certificates of conformity to harmonised standards obtained in compliance with previous directives will remain valid until June 30, 2003, but their validity will cover only conformity to the harmonised standards specified in these directives.



European Commission mark for "Ex" equipment

European Community member states

Austria - A	Belgium - B	Denmark - D	Germany - D	Finland - FIN
France - F	Great Britain - GB	Greece - GR	Ireland - IRL	Italy - I
Luxembourg - L	Netherlands - NL	Portugal - P	Spain - E	Sweden - S

Parker Lucifer SA
Fluid Control Division Europe
CH-1227 Carouge-Genève

Tel: +45 63 12 83 00 | Email: ps@hymatik.com | www.hymatik.com | Hvidkaervej 27a, DK-5250 Odense SV, Denmark

4.2 Definitions *(ref. IEC 60079-10)*

4.2.1 Explosive gas environments

Mixture with air, under atmospheric conditions, of flammable substances in the form of gases, vapour, mists or dusts in which, after combustion has occured, combustion spreads to the entire unburned mixture.

4.2.2 Hazardous areas

A hazardous area is an area in which an explosive gas environment is present, or may be expected to be present, in quantities such as to require special precautions for construction, installation and use of electrical apparatus.

4.2.3. Ingredients for an explosion

When combustible materials are mixed with air, an explosive mixture is produced. Danger of explosion therefore exists wherever these hazardous materials are handled: such a condition is to be found on the biggest chemical plant as well as at the smallest filling station.

Nowadays with the use of electronic and electrical instrumentation in process control, the risk of combustion by electrical energy has increased sharply.

To protect personnel and expensive equipment special precautions should be taken to prevent combustion of those dangerous substances. Conditions likely to ignite explosive mixtures are as follows:

- Electrical sparks and arcs produced when circuits are opened and closed (e.g. relay contacts)
- Conductors heated by passage of current or by faulty apparatus.
- Mechanical sparks; moving object hitting stationary object.
- Electrostatic sparks caused by charged components.
- Chemical action.
- Lightning strikes.
- Radio waves

4.2.4 Zones

The hazardous areas are classified in zones based on the frequency of the occurrence and the duration of an explosive gas environment as follows:

- **Zone 0**

An area in which an explosive gas environment is present continuously or is present for long periods
Type of protection: ia - intrinsic Safety

- **Zone 1**

An area in which an explosive gas environment is likely to occur in normal operations.
Type of protection: d - flameproof enclosure, e - increased safety, ib - intrinsic safety, m - encapsulation

- **Zone 2**

An area in which an explosive gas environment is not likely to occur and if it does occur it will exist for a short period only.
Type of protection: n - protection (IEC 60079-15)

Parker Lucifer SA
Fluid Control Division Europe
CH-1227 Carouge-Genève

Tel: +45 63 12 83 00 | Email: ps@hymatik.com | www.hymatik.com | Hvidkaervej 27a, DK-5250 Odense SV, Denmark

Classification of hazardous location

Explosive environment	Continuous presence	Intermittent presence (normal operation conditions)	Occasional presence (abnormal operation)
IEC	Zone 0 (gas) Zone 20 (dust)	Zone 1 (gas) Zone 21 (dust)	Zone 2 (gas) Zone 22 (dust)
Europe	Zone 0 (gas) Zone 20 (dust)	Zone 1 (gas) Zone 21 (dust)	Zone 2 (gas) Zone 22 (dust)
Canada (CEC)˙ **USA** (NEC) ˝	Cl. I Div.1 (gas) Cl. II Div.1 (dust) Cl.III Div.1 (fibres)	Cl. I Div.1 (gas) Cl. II Div.1 (dust) Cl.III Div.1 (fibres)	Cl. I Div.2 (gas) Cl. II Div.2 (dust) Cl.III Div.2 (fibres)

˙ **(CEC)**: Code Canadien d'Electricité / ˝ **(NEC)**: National Electrical Code

Zones and types of protection (gas applications)

Type of protection	ia	ib	**o, p, q, d, e, m,** or combination between 2 or more types
Suitable zones	**0**	**1**	1, 2

Some additional tests for gas and dust applications are applied to the product according to the new ATEX directive related to the EN 50281-1-1 and EN 50281-1-2 standards:

Type of protection	ia	ib	**o, p, q, d, e, m,** or a combination of 2 or more types
Suitable zones	**20**	**21**	21, 22

Example of classification:

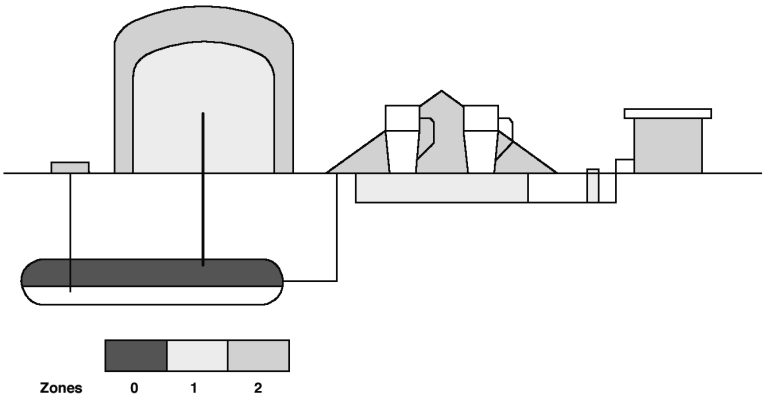

Parker Lucifer SA
Fluid Control Division Europe
CH-1227 Carouge-Genève

Tel: +45 63 12 83 00 | Email: ps@hymatik.com | www.hymatik.com | Hvidkaervej 27a, DK-5250 Odense SV, Denmark

4.5. Types of protection used by Lucifer

4.5.1 Flameproof enclosure

"d"

A type of protection where the parts that can ignite an explosive environment are placed in an enclosure which can withstand the pressure developed during an internal explosion of an explosive mixture and which prevents the transmission of the explosion to the explosive environment surrounding the enclosure.

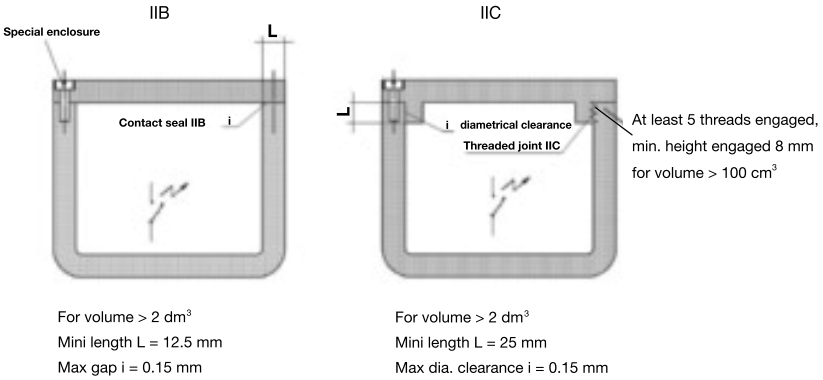

4.5.2 Increased safety

"e"

Type of protection applied to electrical apparatus that does not produce arcs or sparks in normal service, in which additional measures are applied so as to give increased security against the possibility of excessive temperatures and of the occurrence of arcs and sparks.

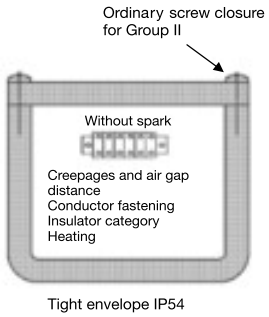

4.5.3 Pressurized apparatus

"p"

A type of protection by which the entry of a surrounding environment into the enclosure of the electrical appartus, is prevented by maintaining, inside the said enclosure, a protective gas at a higher pressure than that of the surrounding environment. The overpressure is maintained either with or without a continuous flow of the protective gas.

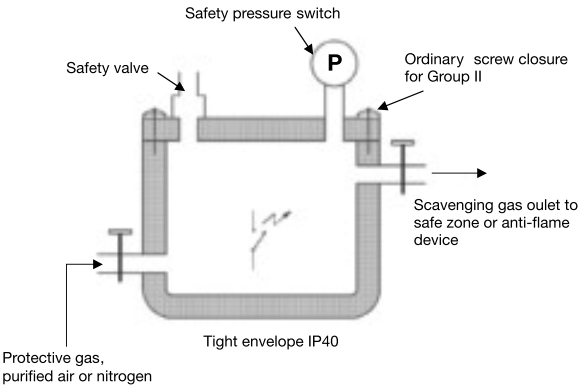

Parker Lucifer SA
Fluid Control Division Europe
CH-1227 Carouge-Genève

Tel: +45 63 12 83 00 | Email: ps@hymatik.com | www.hymatik.com | Hvidkaervej 27a, DK-5250 Odense SV, Denmark

4.5.4 Encapsulation

“m”

A type of protection in which the parts which could ignite an explosive environment by either sparking or heating are enclosed in a compound in such a way that this explosive environment cannot be ignited

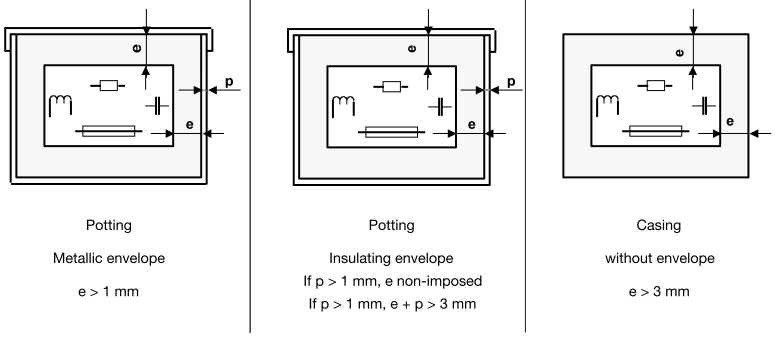

4.5.5 Intrinsic safety

“i”

A circuit in which no spark or any thermal effect produced in the test conditions prescribed in the standard EN 50020 (which include normal operation and specified fault conditions) is capable of causing combustion of a given explosive environment.

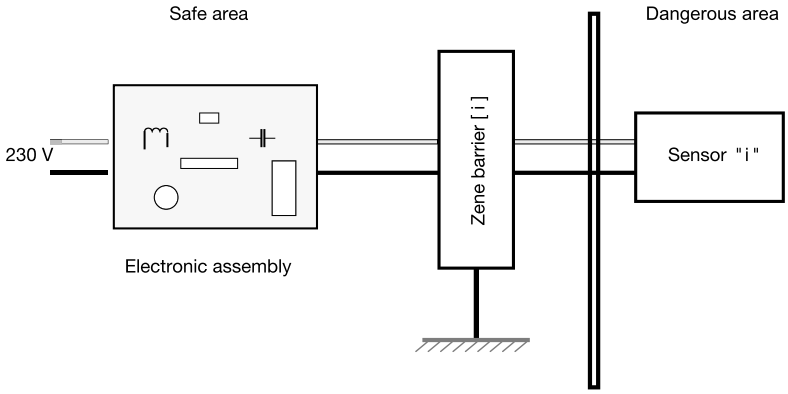

Parker Lucifer SA
Fluid Control Division Europe
CH-1227 Carouge-Genève

Tel: +45 63 12 83 00 | Email: ps@hymatik.com | www.hymatik.com | Hvidkaervej 27a, DK-5250 Odense SV, Denmark

Parker Lucifer SA
Fluid Control Division Europe
CH-1227 Carouge-Genève

Additional information

Page

Technical information about Lucifer valves

- Principles of operation 385
- Flow rate calculation 386
- Designation of seal materials 386
- Unit conversion 387

Fluid compatibility chart 388

Index by reference numbers/cross-reference list 390

Parker Lucifer SA
Fluid Control Division Europe
CH-1227 Carouge-Genève

Tel: +45 63 12 83 00 | Email: ps@hymatik.com | www.hymatik.com | Hvidkaervej 27a, DK-5250 Odense SV, Denmark

Principles of operation

Solenoid valves are electro-mechanical devices that control fluid flow. This is achieved by opening or closing one or several orifices in the solenoid valve. The (solenoid) coil is the electrical element that converts an electrical signal into a mechanical force which, in turn, shifts the mobile plunger that opens or closes an orifice (nozzle) by means of its seat disc(s).

Solenoid valves are usually constructed from 3 distinct components:
- the body (including the sleeve assembly)
- the coil (or coil housing)
- the housing (or nut/nameplate fixing elements).

These 3 modular components are in many cases interchangeable i.e. a valve body can be used with a number of coil/housing combinations. This catalogue presents the main recommended versions. Your distributor will be pleased to speak to you about other specific versions.

Direct operated valves (see fig. 1)
The magnetic force is used directly to open or close the passage of fluid at the plunger sealing. The performance is limited by the available performance of the coil (limits of pressure/orifice size.) The pressure rating of the valve starts from zero bar to the maximum value.

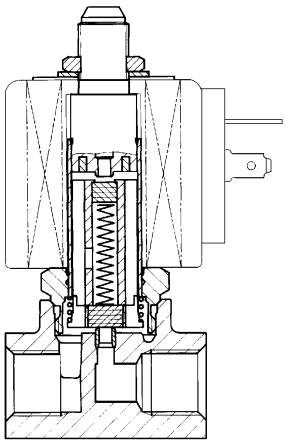

Fig. 1

Pilot operated valves (see fig. 2 and 3)
In cases where it is necessary to control higher flow/higher pressure it is necessary to use pilot operated valves. The supply pressure enters the direct operated "pilot stage" which directs the flow to a "pilot chamber" which, in turn, applies the pilot pressure over a large area (generally a diaphragm or a piston). Therefore, a large force is generated to move the main sealing elements against higher pressure or over a large orifice. One condition of operation is to have a minimum pressure (indicated in the catalogue table) available to shift the valve. In most applications this presents no particular problems (refer to "Magnalift valves" below). The pressure rating of the valve starts from a minimum value (0.3 or 0.5 bar) up to the maximum value.

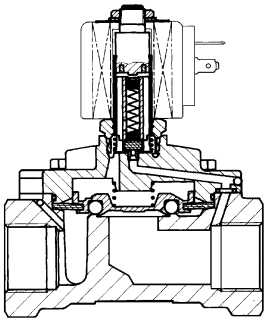

Fig. 2

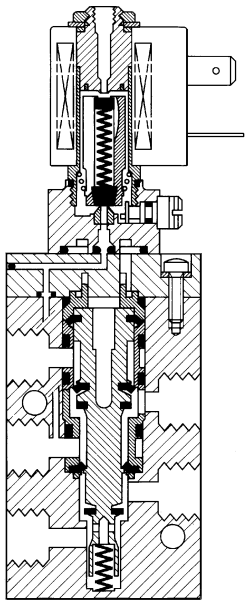

Fig. 3

Magnalift valves (see fig. 4)
The magnalift valves combine the features of a direct operated and a pilot operated valve. A mechanical link between the plunger and the diaphragm retainer allows the valve to operate as a direct operated valve at low pressures and as a pilot operated valve at higher pressures.

The advantage of this design is that the pressure rating of the valve starts from zero bar to the maximum value. Magnalift valves are specified when the valve controls the emptying/filling of a tank under gravity.

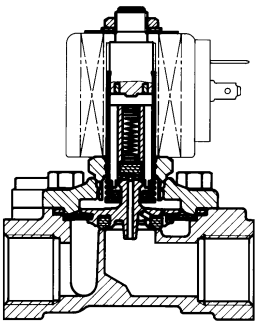

Fig. 4

Parker Lucifer SA
Fluid Control Division Europe
CH-1227 Carouge-Genève

Tel: +45 63 12 83 00 | Email: ps@hymatik.com | www.hymatik.com | Hvidkaervej 27a, DK-5250 Odense SV, Denmark

Flow rate

Liquids

The flow through a pipe or a valve is given by:

$$Q = k_v\sqrt{(\Delta p/\gamma)}$$

where Q = flow (L/min)
Δ = pressure drop (bar)
γ = density of fluid (kg/dm³)
k_v = flow factor of the pipe or valve (L/min)
For water γ = 1 kg/dm³

Flow factor k_v
The kv flow factor of a valve is defined as the flow rate of water in litres per minute with a pressure drop of 1 bar across the valve. Valve manufacturers use different definitions for kv i.e. kv may be expressed in L/h or m³/h, etc. Care should therefore be taken when comparing values.

Maximum flow rate Qmax.
For particular 2-way valves the maximum flow must be limited for reasons of mechanical resistance and durability. A very high flow velocity may dislocate a poppet sealing or a diaphragm. Maximum flow rates are indicated in the catalogue.

Gases

Nominal flow Q_n
Calculations can be made with specific flow factors based on the CETOP RP 50P standard. For practical purposes and ease of valve selection the catalogue shows the nominal flow Q_n. The nominal flow Q_n is defined as the flow rate (L/min) of air across the valve when the inlet pressure p_1 = 6 bar and the pressure drop Δp = 1 bar.

N.B. THE VALUES OF FLOW FACTORS AND FLOW RATES MENTIONED IN CATALOGUES ARE SUBJECT TO ±15% TOLERANCES.

For detailed technical information please ask for publication 1230/GB

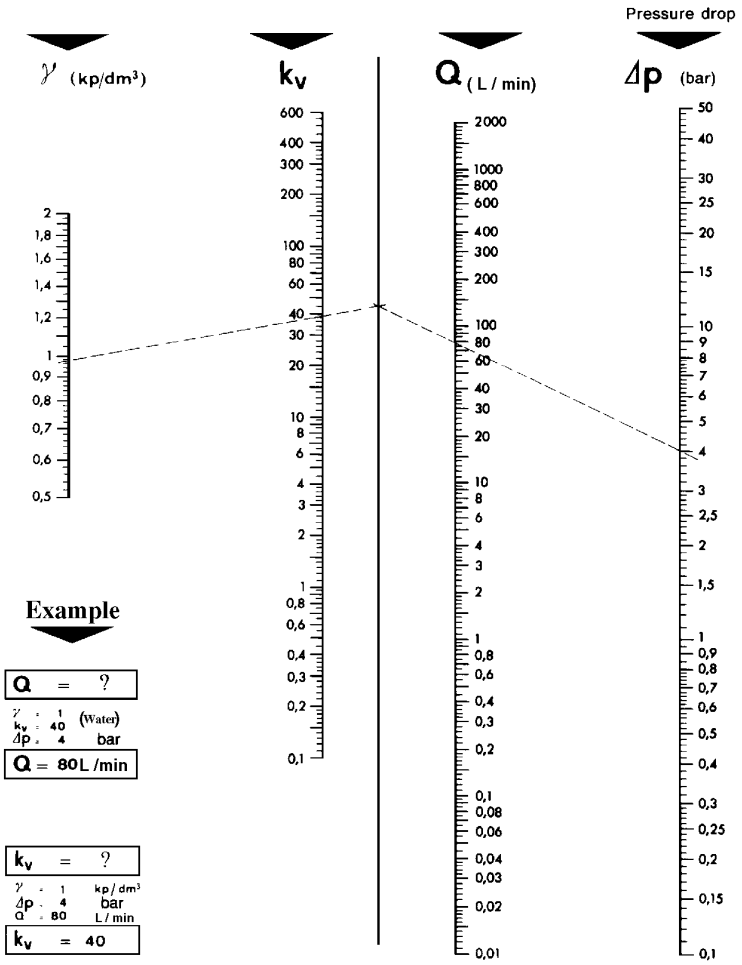

Nomogram for liquid flow calculation

Parker Lucifer SA
Fluid Control Division Europe
CH-1227 Carouge-Genève

Tel: +45 63 12 83 00 | Email: ps@hymatik.com | www.hymatik.com | Hvidkaervej 27a, DK-5250 Odense SV, Denmark

Unit conversion tables/designation of sealing materials

Measures

1 inch = 25.4 mm
1 mm = 0.039 inch
1 U.S. gallon = 3.785 litres
1 imperial gallon = 4.546 litres

Pressure

1 bar = 1.02 kg/cm^2 = 0.98 atm
= 10^5 Pa = 100 kPa
1 bar = 14.51 psi
1 psi = 0.0689 bar = 0.0703 kg/cm^2

Flow rate

k_v in L/min/Δp = 1 bar
c_v in gpm/Δp = 1 psi
1 c_v = 0.07 k_v
1 k_v = 14.28 c_v

1 gpm (U.S. gallon) = 3.785 L/min
1 L/min = 0.0353 cfm

Temperature

°F = °C x 9/5 +32
°C = (°F -32) x 5/9

Torque

1 in. lb. = 0.113 Nm
1 Nm = 8.25 in. lb.

Designation of sealing materials

ASTM Designation	Commercial Designation
NBR	Nitrile rubber, Buna-N,, Perbunan
FKM	Fluoroelastomer
EPDM	Ethylene propylene
PCTFE	Kel-F
PTFE	Teflon®
CR	Neoprene
PUR	Polyurethane
PFPM	Kalrez

Size

mm	inches	decimal inches
0.79	1/32	0.031
1.59	1/16	0.063
2.38	3/32	0.094
3.18	1/8	0.125
3.97	5/32	0.156
4.76	3/16	0.188
5.56	7/32	0.219
6.35	1/4	0.250
7.14	9/32	0.281
7.94	5/16	0.313
8.73	11/32	0.344
9.53	3/8	0.375
10.3	13/32	0.406
11.1	7/16	0.438
11.9	15/32	0.469
12.7	1/2	0.500
13.5	17/32	0.531
14.3	9/16	0.563
15.1	19/32	0.594
15.9	5/8	0.625
16.7	21/32	0.656
17.5	11/16	0.688
18.3	23/32	0.719
19.1	3/4	0.750
19.8	25/32	0.781
20.6	13/16	0.813
21.4	27/32	0.844
22.2	7/8	0.875
23.0	29/32	0.906
23.8	15/16	0.938
24.6	31/32	0.969
25.4	1	1.000

Tel: +45 63 12 83 00 | Email: ps@hymatik.com | www.hymatik.com | Hvidkaervej 27a, DK-5250 Odense SV, Denmark

Fluid compatibility of LUCIFER valves

Key:
NBR = Buna N, Perbunan
FKM = Viton
EPDM = Ethylene - Propylene
PTFE = Teflon
PFPM = Kalrez
PCTFE = Kel F
CR = Neoprene
* Without phase shift ring only with DC coil

| VALVE FUNCTIONS | 2/2 DIRECT OPERATED | | |

| | | |

Index by reference numbers

Valve reference number - global reference number

Valve reference	Global valve ref.	Page
U 033X5156	7033XRN2SN00	274/294
U 033X51561D	7033XRN2SN1D	274/292
U 033X5256	7033XRN3SN00	276/294
U 033X52561D	7033XRN3SN1D	274/294
E 121F43	7121FBF4NF00	14/88
E 121F4302	7121FBF4NV00	14/50
E 121F44	7121FBF4GF00	14/88
E 121F4406	7121FBF4GV00	14/50
121F47	7121FBF4LF00	14
121F4706	7121FBF4LV00	14/50
121F63	7121FBF4LR00	14/88
121F64	7121FBF4NR00	14/88
121F67	7121FBF4GR00	14/88
121G2320	7121GBG34VT0	104
121G2520	7121GBG45VT0	104
121G2523	7121GBG45VT1	104
121K01	7121KBG2SV00	12/48
121K0103	7121KBG2SE00	72
121K0150	7121KBG2SVM0	10/48
121K02	7121KBG2QV00	10/48
121K0250	7121KBG2QVM0	10/48
E 121K03	7121KBG2NF00	10/86
E 121K0302	7121KBG2NV00	10/46
121K0323	7121KBG2NE00	72
E 121K0352	7121KBG2NVM0	10/46
E 121K04	7121KBG2GF00	10/86
E 121K0402	7121KBG2GV00	8/46
E 121K07	7121KBG2LF00	10
121K0706	7121KBG2LV00	10/46
121K0756	7121KBG2LVM0	10/46
121K1302	7121KBG1NV00	8
121K1352	7121KBG1NVM0	8/46
E 121K14	7121KBG1GF00	8/86
E 121K23	7121KBG1LR00	8/86/102
121K2423	7121KBG1NRT0	104
121K3106	7121KBG3SV00	12/48/104
121K3206	7121KBG3QV00	12/48/104
121K3303	7121KBG3UE00	72
121K3306	7121KBG3UV00	12/48/104
E 121K45	7121KBG44V00	12/48
E 121K4503	7121KBG44E00	72
E 121K46	7121KBG42V00	12/48
E 121K4603	7121KBG42E00	72
121K6220	7121KBG2QRT0	106
E 121K63	7121KBG2LR00	10/86/104
E 121K64	7121KBG2NR00	10/86/104
121K6423	-	104/104
E 121K65	7121KBG2ER00	8/86/104
E 121K67	7121KBG2GR00	10/86/104
121M13	-	8/46
121M14	-	8/46
121V5106	7121VVG2SV00	118
121V51061D	7121VVG2SV1D	118
121V5112	7121VVG2ST00	118
121V5163	7121VVG2SR00	74/118
121V5206	7121VVG2QV00	116
121V5212	7121VVG2QT00	116
121V5263	7121VVG2QR00	74/116
121V5306	7121VVG2NV00	116
121V53061D	7121VVG2NV1D	116
121V5363	7121VVG2NR00	74/116
121V5406	7121VVG2GV00	116
121V5463	7121VVG2GR00	74/116
121V5706	7121VVG2LV00	116
121V5763	7121VVG2LR00	74/116
122K83	7122KBG2LF00	12
122K8306	7122KBG2LV00	12/48
122K8321	7122KBG2LRT0	106
122K8363	7122KBG2LR00	12/88/106
122K84	7122KBG2GF00	12/88
122K8406	7122KBG2GV00	12/48
122K8408	7122KBG2GR00	12/88
122K9321	7122KBG1LRT0	106
122K9363	7122KBG1LR00	12/88/106
125K01	7125KBG2SV00	14/50
125K03	7125KBG2NF00	12
E 131E03	7131EBG2LN00	130/228
E 131F26	7131FDF2JV00	148
E 131F43	7131FBF4LV00	144
E 131F4350	7131FBF4LVM0	144
E 131F44	7131FBF4GV00	144
E 131F4450	7131FBF4GVM0	144
131F4480	7131FBF4GLV5	140
131F4490	-	136
131F46	7131FBF4JV00	144
131F4650	7131FBF4JVM0	144
U 131F5695	7131FRF2LV95	276/292
U 131F56951D	7131FRF2LV1D	278
E 131K03	7131KBG2LV00	128
E 131K03001D	7131KBG2LV1D	228
E 131K0308	7131KBG2LP00	130/228
E 131K03081D	7131KBG2LP1D	130/228
E 131K0350	7131KBG2LVM0	128/228
E 131K0358	7131KBG2LPM0	130/228
E 131K04	7131KBG2GV00	126/226
E 131K0450	7131KBG2GVM0	126/226
131K0480	7131KBG2GVL5	126/226
131K0490	7131KBG2CV90	126/226
131K05	7131KBG2BF00	176
E 131K06	7131KBG2JV00	126/226
E 131K06081D	7131KBG2JP1D	128/228
E 131K0650	7131KBG2JVM0	126/226
E 131K13	7131KBG1LV00	124
E 131K14	7131KBG1GV00	124
131K16	7131KBG1JV00	124
131K1650	7131KBG1JVM0	124
E 131K63	7131KBG2LR00	130
E 131K6350	7131KBG2LRM0	130
E 131K64	7131KBG2ER00	126
E 131K6450	7131KBG2ERM0	126
131K65	7131KBG2BR00	176
131M14	-	124/226
131M15	-	124/226
131M74	-	142
131M7450	-	142
131M75	-	138
131M7550	-	138
131T21	7131TBG2RV00	132
131T2101	7131TBG2RVM0	132
131T22	7131TBG2NVA0	132
131T23	7131TBG2JV00	126
131T2301	7131TBG2JVM0	126
131T29	7131TBG2LV00	128
131T2901	7131TBG2LVM0	128
131V5306	7131VVG2LV00	182
131V5363	7131VVG2LR00	182
131V5406	7131VVG2GV00	182
131V5463	7131VVG2GR00	182
131V5490	-	182
131V65	7131WVG2BR00	176
131X1101	7131XAKLVN00	230
U 131X1201	7131XRKMVN00	276/292
132F43	7132FBF4LV00	144
132F44	7132FBF4GV00	144
132F46	7132FBF4JV00	144
132K03	7132KBG2LV00	132
132K04	7132KBG2GV00	132
132K06	7132KBG2JV00	132
132T22	7132TBG2NVA0	134
132T23	7132TBG2JV00	132
132T2301	7132TBG2JVM0	132
132T29	7132TBG2LV00	132
E 133F43	7133FBF4LV00	146
E 133F4350	7133FBF4LVM0	144
E 133F44	7133FBF4GV00	144
E 133F4450	7133FBF4GVM0	144
133F46	7133FBF4JV00	144
133F4650	7133FBF4JVM0	144
E 133K03	7133KBG2LV00	134
E 133K0350	7133KBG2LVM0	134
E 133K04	7133KBG2GV00	134
E 133K04001D	7133KBG2GV1D	134
E 133K0450	7133KBG2GVM0	134
E 133K05	7133KBG2BV00	176
E 133K06	7133KBG2JV00	134
E 133K0650	7133KBG2JVM0	134
E 133K13	7133KBG1LV00	134
E 133K14	7133KBG1GV00	134
E 133K16	7133KBG1JV00	134
133T21	7133TBG2NV00	134
133T2101	7133TBG2NVM0	134
133T23	7133TBG2JV00	134
133T2301	7133TBG2JVM0	134
133V5306	7133VVG2LV00	182
133V5363	7133VVG2LR00	182

Parker Lucifer SA
Fluid Control Division Europe
CH-1227 Carouge-Genève

Tel: +45 63 12 83 00 | Email: ps@hymatik.com | www.hymatik.com | Hvidkaervej 27a, DK-5250 Odense SV, Denmark

Valve reference number - global reference number

Valve reference	Global valve ref.	Page
133V5406	7133VVG2GV00	182
133V5463	7133VVG2GR00	182
U 133V5695	7133VRN2LV95	278/288
U 133V56951D	7133VRN2LV9D	278/288
133X01	-	230
U 133X5156	7133XRN2SV00	280/290
U 133X51561D	7133XRN2SV1D	280/288
U 133X5196	7133XRN2VN96	280
U 133X51961D	7133XRN2VN9H	280
U 133X5296	7133XRN3SN96	282/290
U 133X52961D	7133XRN3SN9H	282/290
135K03	7135KBG2LV00	136/228
135K04	7135KBG2GV00	136/228
221G13	7221GBG3VN00	16/52/64
221G1303	7221GBG3VE00	76
221G1330	7221GBG3VNH0	16/52/64
221G15	7221GBG4VN00	16/52/64
221G1503	7221GBG4VE00	76
221G1530	7221GBG4VNH0	16/52/64
221G16	7221GBG51N00	18/52
221G1603	7221GBG51E00	76
221G1610	7221GBG51NC0	64
221G1630	7221GBG51NH0	18/52
221G1631	7221GBG51NCH	64
221G17	7221GBG61N00	18/52
221G1703	7221GBG61E00	76
221G1710	7221GBG61NC0	64
221G1730	7221GBG61NH0	18/52
221G1731	7221GBG61NCH	64
221G21	7221GBG64N00	18/54
221G2103	7221GBG64E00	76
221G2106	7221GBG64V00	18
221G2110	7221GBG64NC0	64
221G2130	7221GBG64NH0	18/52
221G2131	7221GBG64NCH	64
221G2136	7221GBG64VH0	18
221G23	7221GBG3VV00	16
221G2330	7221GBG3VVH0	16
221G25	7221GBG4VV00	16
221G25001D	7221GBG4VV1D	16
221G2530	7221GBG4VVH0	16
221G26	7221GBG51V00	18
221G26001D	7221GBG51V1D	16
221G2630	7221GBG51VH0	18
221G27	7221GBG61V00	18
221G27001D	7221GBG61V1D	18
221G2730	7221GBG61VH0	18
221G5303	72218RG3TE00	78
221G5306	72218RG3TV00	20/54
221G5503	72218RG4UE00	78
221G5506	72218RG4UV00	20/54
221G5603	72218RG5VE00	78
221G5606	72218RG5VV00	20/54
221J3301E	-	118
222G3303	72228BG3TES0	78
222G3306	72228BG3TV00	20/54
222G3503	72228BG4UES0	78
222G3506	72228BG4UV00	20/54
222G3603	72228BG5VES0	78
222G3606	72228BG5VV00	20/54
222G5303	72228RG3TE00	78
222G5306	72228RG3TV00	20/54
222G5503	72228RG4UE00	78
222G5506	72228RG4UV00	20/54
222G5603	72228RG5VE00	78
E 321F32	7321FBF3TN00	34/60/92
E 321F3202	7321FBF3TV00	34/92/110
E 321G36	7321GBG53N00	24/56
E 321G3606	7321GBG53V00	24
E 321G3610	7321GBG53NMC	66
E 321G37	7321GBG64N00	26/58
E 321G3706	7321GBG64V00	24
E 321G3710	7321GBG64NMC	66
E 321G37101D	7321GBG64N1D	26
321G3790	-	26
E 321G38	7321GBG76N00	26/58
E 321G3806	7321GBG76V00	26
E 321G3810	7321GBG76NMC	68
E 321G39	7321GBG88N00	28/58
E 321G3906	7321GBG88V00	26
E 321G3910	7321GBG88NMC	68
E 321G39101D	7321GBG88N3D	28
321G3990	-	26
E 321G40	7321GBG99N00	30/58
E 321G4006	7321GBG99V00	28
E 321G4010	7321GBG99NMC	68
E 321G40101D	7321GBG99N3D	30
321G4090	-	28
321G8312	73218BG3TTS0	80
321G8512	73218BG4UTS0	80
321G8612	73218BG5VTS0	80
321G8712	73218BG64TS0	82
321G8812	73218BG75TS0	82
321G8912	73218BG87TS0	82
E 321H11	7321HBG2SN00	22/90
E 321H13	7321HBG3TN00	22/90
E 321H15	7321HBG4UN00	24/90
321H1590	-	22
E 321H21	7321HBG2SV00	22/90/108
E 321H23	7321HBG3TV00	22/90/108
321H2322	7321HBG3TVT0	108
E 321H25	7321HBG4UV00	22/90/108
321H2522	7321HBG4UVT0	108
321K31	-	22/56
321K3106	-	22
321K33	-	22/56
321K3306	-	22
321K35	-	22/56
321K3506	-	22
321K36	-	24/56
321K3606	-	24
321K37	-	24/56
321K3706	-	24
321K4103	7321KBG2SEW0	80
321K4106	7321KBG2SVW0	66
321K4156	7321KBG2SVMW	66
321K4303	7321KBG3TEW0	80
321K4306	7321KBG3TVW0	66
321K4356	7321KBG3TVMW	66
321K4503	7321KBG4TEW0	80
321K4506	7321KBG4TVW0	66
321K4556	7321KBG4TVMW	66
321K4603	7321KBG51EW0	80
321K4606	7321KBG51VW0	66
321K4656	7321KBG51VMW	66
321K4703	7321KBG62EW0	80
321K4706	7321KBG62VW0	66
321K4756	7321KBG62VMW	66
322F72	7322FBF3TN00	34/60/92
322F7206	7322FBF3TV00	34/92/110
322G36	7322GBG53N00	32/58
322G3606	7322GBG53V00	32
322G3610	7322GBG53NC0	68
322G37	7322GBG64N00	32/60
322G3706	7322GBG64V00	32
322G3710	7322GBG64NC0	68
322G38	7322GBG76N00	32/60
322G3806	7322GBG76V00	32
322G3810	7322GBG76NC0	68
322G39	7322GBG88N00	32/60
322G3906	7322GBG88V00	32
322G3910	7322GBG88NC0	68
322G40	7322GBG99N00	32/60
322G4006	7322GBG99V00	32
322G4010	7322GBG99NC0	68
322G7506	7322GBG4UV00	110
322G8312	73228BG3TTS0	82
322G8512	73228BG4UTS0	82
322G8612	73228BG52TS0	82
322G8712	73228BG64TS0	82
322G8812	73228BG75TS0	82
322G8912	73228BG87TS0	82
322H71	7322HBG2SN00	30/92
322H7106	7322HBG2SV00	30/90/108
322H73	7322HBG3TN00	32/92
322H7306	7322HBG3TV00	32/92/108
322H75	7322HBG4UN00	32/92
322H7506	7322HBG4UV00	32/92/110
322K4106	7322KBG2SVW0	32
322K4306	7322KBG3TVW0	32
322K4506	7322KBG4TVW0	32
322K4606	7322KBG51VW0	32
322K4706	7322KBG62VW0	32
325K4106	7325KBG2SVW0	34
325K4306	7325KBG3TVW0	34
325K4506	7325KBG4TVW0	34
325K4606	7325KBG51VW0	34
325K4706	7325KBG62VW0	34
E 331B01	7331BAG2QN00	152
331B02	7331BAG2KN00	150/178
E 331B21	7331BAG4QN00	152
E 331B74	7331BAG2KNM0	150
331B7480	7331BAG2KNL2	150
331B7490	-	150

Parker Lucifer SA
Fluid Control Division Europe
CH-1227 Carouge-Genève

Valve reference number - global reference number

Valve reference	Global valve ref.	Page
E 331L21	7331LAV4TNM0	158
E 331L21001D	7331LAV4TN1D	156
E 332B01	7332BAG2QN00	154
332B02	7332BAG2KN00	152/178
E 332B21	7332BAG4QN00	154
E 341B01	7341BAG2PN00	198
341B02	7341BAG2KN00	198
E 341B11	7341BAG3PN00	200
E 341B21	7341BAG4TN00	212
341B34	7341BAG2JNMR	188
341B3403	7341BAG2JNM0	188
341B3480	7341BAG2JNL8	188
341B3490	-	188
341F34	7341FAS3JNMR	190
341F3403	7341FAS3JNM0	190
E 341L01	7341LDC1LNM8	218
341L0180	7341LDC1LNL8	218
E 341L02	7341LDC1LNMI	218
341L04	-	218
341L05	-	218
341L11	-	202/256
E 341L1130	7341LMG2NNM0	204/260
341L1190	-	204/260
E 341L21	7341LAV4TNM0	218
341L2190	7341LAV4TN90	216
341L9101	-	196/254
341L9201	-	214
341L9504	-	270
341L9534	7341LAKBGNM0	270
341L95341D	7341LAKBGN1D	270
341L9584	7341LAKBGNL2	270
341L9588	7341LAPBGPL2	270
341L9594	7341LAKBGN90	270
341L9598	-	270
341N01	2341NAKBJNM1	258
U 341N0150	2341NRKDJNM1	308
341N02	2341NAKBPNM1	264
U 341N0250	2341NRKNNNM1	310
341N11	2341NAKBJNM0	258
341N12	2341NAKBNNM0	264
341N21	7341NAKBJNM1	258
341N22	7341NAKBPNM1	264
341N31	7341NAKBJNM0	260
341N31001D	7341NAKBJN1D	260
341N3108	7341NAKBJPM0	260
341N31081D	7341NAKBJP1D	260
U 341N3150	7341NRKDJN00	308
U 341N31501D	7341NRKDJN1D	308
341N3180	7341NAKBJNL2	260
341N3190	7341NAKBHN90	260
U 341N3192	7341NRKDJN92	310
U 341N3195	7341NRKDJN95	310
341N32	7341NAKBPNM0	266
341N32001D	7341NAKBPN1D	266
U 341N3250	7341NRKNNN00	312
341N3280	7341NAKBPNL2	266
341N3290	7341NAKBPN90	266
U 341N3292	7341NRKNNN92	312
U 341N3295	7341NRKNNN95	312
341P01	2341PAG1JNM0	238
U 341P0150	2341PRN2JNM1	296
341P02	2341PAG2HNM0	242
U 341P0250	2341PRN3NNM1	298
341P21	7341PAG1JNM0	238
341P21001D	7341PAG1JN1D	240
341P2108	7341PAG1JPM0	238
341P2180	7341PAG1JNL2	238
341P2190	7341PAG1JN90	238
341P22	7341PAG2PNM0	244
341P22001D	7341PAG2PN1D	246
341P2280	7341PAG2PNL2	244
341P2290	7341PAG2PN90	244
U 341P3150	7341PRN2JN00	296
U 341P3192	7341PRN2JN92	296
U 341P3195	7341PRN2JN95	298
U 341P31951D	7341PRN2JN9D	298
U 341P3250	7341PRN3NN00	300
U 341P3292	7341PRN3NN92	300
U 341P3295	7341PRN3NN95	300
U 341P32951D	7341PRN3NN9D	302
345B04	7345BAG2PN00	200
345B24	7345BAG4TN00	212
345B34	7345BAG2JNMR	192
345F34	7345FAS3JNMR	194
345L01	7345LDC1LNM8	220
345L21	7345LAV4TNM0	218
345P21	7345PAG1JNM0	242
347L11	-	206/258
E 347L1130	7347LMG2NNM0	208
347L9101	-	198/260
347L9201	-	214
347N11	2347NAKBHNM0	262
347N12	2347NAKBPNM0	268
347N31	7347NAKBHNM0	262
U 347N3150	7347NRKDHNM0	314
U 347N3192	7347NRKDHN92	314
347N32	7347NAKBPNM0	268
U 347N3250	7347NRKNNN00	314
347P01	2347PAG1HNM0	240
347P02	2347PAG2PNM0	246
347P21	7347PAG1HNM0	240
347P2190	7347PAG1HN90	240
347P22	7347PAG2PNM0	244
U 347P3150	7347PRN2JN00	304
U 347P3195	7347PRN2JN95	304
U 347P3250	7347PRN3NN00	304
U 347P3295	7347PRN3NN95	306
441N3108	7441NAKBJPM0	266
441P2108	7441PAG1JPM0	242
U 441P3250	7441PRN3NN00	302
541L01	7541LDC1LNR0	220
541N01	7541NAKBJN00	262
541N0108	7541NAKBJN00	268
541P0108	7541PAG1JP00	244
U 541P0250	7541PRN3NNM1	302
547L11	7547LMG2NN00	210
-	3121BBN1AV00	38
-	3121BBN1EV00	38
-	3121BBN1GV00	38
-	3121BBN1JV00	38
-	3121BBN1LV00	38
-	3121BBN1NV00	38
-	3121BBN1QV00	38
-	3121BJA7EVC#	42
-	3121BJA7GVC#	42
-	3121BSN1AV00	40
-	3121BSN1EV00	40
-	3121BSN1GV00	40
-	3121BSN1JV00	40
-	3121BSN1LV00	40
-	3121BSN1NV00	40
-	3121BSN1QV00	40
-	3129BBN1AV00	40
-	3129BBN1EV00	40
-	3129BBN1GV00	40
-	3129BBN1JV00	40
-	3129BBN1LV00	40
-	3129BJA7EVC#	42
-	3129BJA7GVC#	42
-	3129BJA7LVC#	42
-	3129BSN1AV00	42
-	3129BSN1EV00	42
-	3129BSN1GV00	42
-	3129BSN1JV00	42
-	3129BSN1LV00	42
-	3131BBN1AV00	162
-	3131BBN1EV00	162
-	3131BBN1GV00	162
-	3131BBN1JV00	162
-	3131BBN1LV00	162
-	3131BBN1NV00	162
-	3131BBN1QV00	162
-	3131BJA7EVC#	170
-	3131BJA7GVC#	170
-	3131BSN1AV00	166
-	3131BSN1EV00	166
-	3131BSN1GV00	166
-	3131BSN1JV00	166
-	3131BSN1LV00	166
-	3131BSN1NV00	166
-	3131BSN1QV00	166
-	3133BBN1AV00	164
-	3133BBN1EV00	164
-	3133BBN1GV00	164
-	3133BBN1JV00	164
-	3133BBN1LV00	164
-	3133BBN1NV00	164
-	3133BBN1QV00	164
-	3133BJA7EVC#	170
-	3133BJA7GVC#	170
-	3133BSN1AV00	168
-	3133BSN1EV00	168
-	3133BSN1GV00	168
-	3133BSN1JV00	168

Parker Lucifer SA
Fluid Control Division Europe
CH-1227 Carouge-Genève

Tel: +45 63 12 83 00 | Email: ps@hymatik.com | www.hymatik.com | Hvidkaervej 27a, DK-5250 Odense SV, Denmark

Valve reference number - global reference number

Valve reference	Global valve ref.	Page
-	3133BSN1LV00	168
-	3133BSN1NV00	168
-	3133BSN1QV00	168
-	3138BBN1AV00	166
-	3138BBN1EV00	166
-	3138BBN1GV00	166
-	3138BBN1JV00	166
-	3138BBN1LV00	166
-	3138BBN1NV00	166
-	3138BBN1QV00	166
-	3138BJA7EVC#	172
-	3138BJA7GVC#	172
-	3138BSN1AV00	170
-	3138BSN1EV00	170
-	3138BSN1GV00	170
-	3138BSN1JV00	170
-	3138BSN1LV00	170
-	3138BSN1NV00	170
-	3138BSN1QV00	170
-	3139BBN1AV00	162
-	3139BBN1EV00	164
-	3139BBN1GV00	164
-	3139BBN1JV00	164
-	3139BBN1LV00	164
-	3139BBN1NV00	164
-	3139BBN1QV00	164
-	3139BJA7EVC#	170
-	3139BJA7GVC#	170
-	3139BSN1AV00	168
-	3139BSN1EV00	168
-	3139BSN1GV00	168
-	3139BSN1JV00	168
-	3139BSN1LV00	168
-	3139BSN1NV00	168
-	3139BSN1QV00	168
-	3921BBN1AV00	38
-	3921BBN1EV00	38
-	3921BBN1GV00	38
-	3921BBN1JV00	38
-	3921BBN1LV00	38
-	3921BBN1NV00	38
-	3921BJA7EVC#	42
-	3921BJA7GVC#	42
-	3921BSN1AV00	40
-	3921BSN1EV00	40
-	3921BSN1GV00	40
-	3921BSN1JV00	40
-	3921BSN1LV00	40
-	3921BSN1NV00	40
-	3931BBN1JV00	162
-	3931BBN1LV00	162
-	3931BBN1NV00	162
-	3931BBN1QV00	162
-	3931BSN1JV00	166
-	3931BSN1LV00	166
-	3931BSN1NV00	166
-	3931BSN1QV00	166
-	3933BBN1AV00	164

Valve reference	Global valve ref.	Page
-	3933BBN1EV00	164
-	3933BBN1GV00	164
-	3933BBN1JV00	164
-	3933BJA7EVC#	170
-	3933BJA7GVC#	172
-	3933BSN1AV00	168
-	3933BSN1EV00	168
-	3933BSN1GV00	168
-	3933BSN1JV00	168
-	71214TN2KT00	114
-	71214TN2MT00	114
-	71214TN2QT00	114
-	71214TN2ST00	114
-	71214VN2KN00	114
-	71214VN2KT00	114
-	71214VN2MN00	114
-	71214VN2MT00	114
-	71214VN2QN00	114
-	71214VN2QT00	114
-	71214VN2SN00	114
-	71214VN2ST00	114
-	7121ZBG1GV00	8/46
-	7121ZBG1LR00	102
-	7121ZBG1LRT0	102
-	7121ZBG1LV00	8/46
-	7121ZCBG1LR00	102
-	7131ZBG1JV00	124
-	7321BBG3TE00	80
-	7321BBG3TN00	56
-	7321BBG3TNM0	56
-	7321BBG4TE00	80
-	7321BBG4TN00	56
-	7321BBG4TNM0	56
-	7321BBG53E00	80
-	7321BBG53N00	56
-	7321BBG53NM0	56
-	7321BBG64E00	80
-	7321BBG64N00	56
-	7321BBG64NM0	58
-	7321BBG78E00	82
-	7321BBG78N00	58
-	7321BBG78NM0	58
-	7321BBG88E00	82
-	7321BBG88N00	58
-	7321BBG88NM0	58
-	7321BBG99E00	82
-	7321BBG99N00	58
-	7321BBG99NM0	58
-	7321BBGCBNM1	58
-	7321BBGDCNM1	58
-	7322BBG3TN00	58
-	7322BBG4TN00	58
-	7322BBG53N00	58
-	7322BBG64N00	60
-	7322BBG78N00	60
-	7322BBG88N00	60
-	7322BBG99N00	60

Parker Lucifer SA
Fluid Control Division Europe
CH-1227 Carouge-Genève

Index by reference numbers

global reference number - Valve reference number

Global valve ref.	Valve reference	Page
2341NAKBJNM0	341N11	258
2341NAKBJNM1	341N01	258
2341NAKBNNM0	341N12	264
2341NAKBPNM1	341N02	264
2341NRKDJNM1	U 341N0150	308
2341NRKNNNM1	U 341N0250	310
2341PAG1JNM0	341P01	238
2341PAG2HNM0	341P02	242
2341PRN2JNM1	U 341P0150	296
2341PRN3NNM1	U 341P0250	298
2347NAKBHNM0	347N11	262
2347NAKBPNM0	347N12	268
2347PAG1HNM0	347P01	240
2347PAG2PNM0	347P02	246
3121BBN1AV00	-	38
3121BBN1EV00	-	38
3121BBN1GV00	-	38
3121BBN1JV00	-	38
3121BBN1LV00	-	38
3121BBN1NV00	-	38
3121BBN1QV00	-	38
3121BJA7EVC#	-	42
3121BJA7GVC#	-	42
3121BSN1AV00	-	40
3121BSN1EV00	-	40
3121BSN1GV00	-	40
3121BSN1JV00	-	40
3121BSN1LV00	-	40
3121BSN1NV00	-	40
3121BSN1QV00	-	40
3129BBN1AV00	-	40
3129BBN1EV00	-	40
3129BBN1GV00	-	40
3129BBN1JV00	-	40
3129BBN1LV00	-	40
3129BJA7EVC#	-	42
3129BJA7GVC#	-	42
3129BJA7LVC#	-	42
3129BSN1AV00	-	42
3129BSN1EV00	-	42
3129BSN1GV00	-	42
3129BSN1JV00	-	42
3129BSN1LV00	-	42
3131BBN1AV00	-	162
3131BBN1EV00	-	162
3131BBN1GV00	-	162
3131BBN1JV00	-	162
3131BBN1LV00	-	162
3131BBN1NV00	-	162
3131BBN1QV00	-	162
3131BJA7EVC#	-	170
3131BJA7GVC#	-	170
3131BSN1AV00	-	166
3131BSN1EV00	-	166
3131BSN1GV00	-	166
3131BSN1JV00	-	166
3131BSN1LV00	-	166
3131BSN1NV00	-	166
3131BSN1QV00	-	166
3133BBN1AV00	-	164
3133BBN1EV00	-	164
3133BBN1GV00	-	164
3133BBN1JV00	-	164
3133BBN1LV00	-	164
3133BBN1NV00	-	164
3133BBN1QV00	-	164
3133BJA7EVC#	-	170
3133BJA7GVC#	-	170
3133BSN1AV00	-	168
3133BSN1EV00	-	168
3133BSN1GV00	-	168
3133BSN1JV00	-	168
3133BSN1LV00	-	168
3133BSN1NV00	-	168
3133BSN1QV00	-	168
3138BBN1AV00	-	166
3138BBN1EV00	-	166
3138BBN1GV00	-	166
3138BBN1JV00	-	166
3138BBN1LV00	-	166
3138BBN1NV00	-	166
3138BBN1QV00	-	166
3138BJA7EVC#	-	172
3138BJA7GVC#	-	172
3138BSN1AV00	-	170
3138BSN1EV00	-	170
3138BSN1GV00	-	170
3138BSN1JV00	-	170
3138BSN1LV00	-	170
3138BSN1NV00	-	170
3138BSN1QV00	-	170
3139BBN1AV00	-	162
3139BBN1EV00	-	164
3139BBN1GV00	-	164
3139BBN1JV00	-	164
3139BBN1LV00	-	164
3139BBN1NV00	-	164
3139BBN1QV00	-	164
3139BJA7EVC#	-	170
3139BJA7GVC#	-	170
3139BSN1AV00	-	168
3139BSN1EV00	-	168
3139BSN1GV00	-	168
3139BSN1JV00	-	168
3139BSN1LV00	-	168
3139BSN1NV00	-	168
3139BSN1QV00	-	168
3921BBN1AV00	-	38
3921BBN1EV00	-	38
3921BBN1GV00	-	38
3921BBN1JV00	-	38
3921BBN1LV00	-	38
3921BBN1NV00	-	38
3921BJA7EVC#	-	42
3921BJA7GVC#	-	42
3921BSN1AV00	-	40
3921BSN1EV00	-	40
3921BSN1GV00	-	40
3921BSN1JV00	-	40
3921BSN1LV00	-	40
3921BSN1NV00	-	40
3931BBN1JV00	-	162
3931BBN1LV00	-	162
3931BBN1NV00	-	162
3931BBN1QV00	-	162
3931BSN1JV00	-	166
3931BSN1LV00	-	166
3931BSN1NV00	-	166
3931BSN1QV00	-	166
3933BBN1AV00	-	164
3933BBN1EV00	-	164
3933BBN1GV00	-	164
3933BBN1JV00	-	164
3933BJA7EVC#	-	170
3933BJA7GVC#	-	172
3933BSN1AV00	-	168
3933BSN1EV00	-	168
3933BSN1GV00	-	168
3933BSN1JV00	-	168
7033XRN2SN00	U 033X5156	274/294
7033XRN2SN1D	U 033X51561D	274/292
7033XRN3SN00	U 033X5256	276/294
7033XRN3SN1D	U 033X52561D	274/294
71214TN2KT00	-	114
71214TN2MT00	-	114
71214TN2QT00	-	114
71214TN2ST00	-	114
71214VN2KN00	-	114
71214VN2KT00	-	114
71214VN2MN00	-	114
71214VN2MT00	-	114
71214VN2QN00	-	114
71214VN2QT00	-	114
71214VN2SN00	-	114
71214VN2ST00	-	114
7121FBF4GF00	E 121F44	14/88
7121FBF4GR00	121F67	14/88
7121FBF4GV00	E 121F4406	14/50
7121FBF4LF00	121F47	14
7121FBF4LR00	121F63	14/88
7121FBF4LV00	121F4706	14/50
7121FBF4NF00	E 121F43	14/88
7121FBF4NR00	121F64	14/88
7121FBF4NV00	E 121F4302	14/50
7121GBG34VT0	121G2320	104

Parker Lucifer SA
Fluid Control Division Europe
CH-1227 Carouge-Genève

global reference number - Valve reference number

Global valve ref.	Valve reference	Page
7121GBG45VT0	121G2520	104
7121GBG45VT1	121G2523	104
7121KBG1GF00	E 121K14	8/86
7121KBG1LR00	E 121K23	8/86/102
7121KBG1NRT0	121K2423	104
7121KBG1NV00	121K1302	8
7121KBG1NVM0	121K1352	8/46
7121KBG2ER00	E 121K65	8/86/104
7121KBG2GF00	E 121K04	10/86
7121KBG2GR00	E 121K67	10/86/104
7121KBG2GV00	E 121K0402	8/46
7121KBG2LF00	E 121K07	10
7121KBG2LR00	E 121K63	10/86/104
7121KBG2LV00	121K0706	10/46
7121KBG2LVM0	121K0756	10/46
7121KBG2NE00	121K0323	72
7121KBG2NF00	E 121K03	10/86
7121KBG2NR00	E 121K64	10/86/104
7121KBG2NRT0	121K6423	104
7121KBG2NV00	E 121K0302	10/46
7121KBG2NVM0	E 121K0352	10/46
7121KBG2QRT0	121K6220	106
7121KBG2QV00	121K02	10/48
7121KBG2QVM0	121K0250	10/48
7121KBG2SE00	121K0103	72
7121KBG2SV00	121K01	12/48
7121KBG2SVM0	121K0150	10/48
7121KBG3QV00	121K3206	12/48/104
7121KBG3SV00	121K3106	12/48/104
7121KBG3UE00	121K3303	72
7121KBG3UV00	121K3306	12/48/104
7121KBG42E00	E 121K4603	72
7121KBG42V00	E 121K46	12/48
7121KBG44E00	E 121K4503	72
7121KBG44V00	E 121K45	12/48
7121VVG2GR00	121V5463	74/116
7121VVG2GV00	121V5406	116
7121VVG2LR00	121V5763	74/116
7121VVG2LV00	121V5706	116
7121VVG2NR00	121V5363	74/116
7121VVG2NV00	121V5306	116
7121VVG2NV1D	121V53061D	116
7121VVG2QR00	121V5263	74/116
7121VVG2QT00	121V5212	116
7121VVG2QV00	121V5206	116
7121VVG2SR00	121V5163	74/118
7121VVG2ST00	121V5112	118
7121VVG2SV00	121V5106	118
7121VVG2SV1D	121V51061D	118
7121ZBG1GV00	-	8/46
7121ZBG1LR00	-	102
7121ZBG1LRT0	-	102
7121ZBG1LV00	-	8/46
7121ZCBG1LR00	-	102
7122KBG1LR00	122K9363	12/88/106
7122KBG1LRT0	122K9321	106
7122KBG2GF00	122K84	12/88
7122KBG2GR00	122K8408	12/88
7122KBG2GV00	122K8406	12/48
7122KBG2LF00	122K83	12
7122KBG2LR00	122K8363	12/88/106
7122KBG2LRT0	122K8321	106
7122KBG2LV00	122K8306	12/48
7125KBG2NF00	125K03	12
7125KBG2SV00	125K01	14/50
7131EBG2LN00	E 131E03	130/228
7131FBF4GLV5	131F4480	140
7131FBF4GV00	E 131F44	144
7131FBF4GVM0	E 131F4450	144
7131FBF4JV00	131F46	144
7131FBF4JVM0	131F4650	144
7131FBF4LV00	E 131F43	144
7131FBF4LVM0	E 131F4350	144
7131FDF2JV00	E 131F26	148
7131FRF2LV1D	U 131F56951D	278
7131FRF2LV95	U 131F5695	276/292
7131KBG1GV00	E 131K14	124
7131KBG1JV00	131K16	124
7131KBG1JVM0	131K1650	124
7131KBG1LV00	E 131K13	124
7131KBG2BF00	131K05	176
7131KBG2BR00	131K65	176
7131KBG2CV90	131K0490	126/226
7131KBG2ER00	E 131K64	126
7131KBG2ERM0	E 131K6450	126
7131KBG2GV00	E 131K04	126/226
7131KBG2GVL5	131K0480	126/226
7131KBG2GVM0	E 131K0450	126/226
7131KBG2JP1D	E 131K06081D	128/228
7131KBG2JV00	E 131K06	126/226
7131KBG2JVM0	E 131K0650	126/226
7131KBG2LP00	E 131K0308	130/228
7131KBG2LP1D	E 131K03081D	130/228
7131KBG2LPM0	E 131K0358	130/228
7131KBG2LR00	E 131K63	130
7131KBG2LRM0	E 131K6350	130
7131KBG2LV00	E 131K03	128
7131KBG2LV1D	E 131K03001D	228
7131KBG2LVM0	E 131K0350	128/228
7131TBG2JV00	131T23	126
7131TBG2JVM0	131T2301	126
7131TBG2LV00	131T29	128
7131TBG2LVM0	131T2901	128
7131TBG2NVA0	131T22	132
7131TBG2RV00	131T21	132
7131TBG2RVM0	131T2101	132
7131VVG2GR00	131V5463	182
7131VVG2GV00	131V5406	182
7131VVG2LR00	131V5363	182
7131VVG2LV00	131V5306	182
7131WVG2BR00	131V65	176
7131XAKLVN00	131X1101	230
7131XRKMVN00	U 131X1201	276/292
7131ZBG1JV00	-	124
7132FBF4GV00	132F44	144
7132FBF4JV00	132F46	144
7132FBF4LV00	132F43	144
7132KBG2GV00	132K04	132
7132KBG2JV00	132K06	132
7132KBG2LV00	132K03	132
7132TBG2JV00	132T23	132
7132TBG2JVM0	132T2301	132
7132TBG2LV00	132T29	132
7132TBG2NVA0	132T22	134
7133FBF4GV00	E 133F44	144
7133FBF4GVM0	E 133F4450	144
7133FBF4JV00	133F46	144
7133FBF4JVM0	133F4650	144
7133FBF4LV00	E 133F43	146
7133FBF4LVM0	E 133F4350	144
7133KBG1GV00	E 133K14	134
7133KBG1JV00	E 133K16	134
7133KBG1LV00	E 133K13	134
7133KBG2BV00	E 133K05	176
7133KBG2GV00	E 133K04	134
7133KBG2GV1D	E 133K04001D	134
7133KBG2GVM0	E 133K0450	134
7133KBG2JV00	E 133K06	134
7133KBG2JVM0	E 133K0650	134
7133KBG2LV00	E 133K03	134
7133KBG2LVM0	E 133K0350	134
7133TBG2JV00	133T23	134
7133TBG2JVM0	133T2301	134
7133TBG2NV00	133T21	134
7133TBG2NVM0	133T2101	134
7133VRN2LV95	U 133V5695	278/288
7133VRN2LV9D	U 133V56951D	278/288
7133VVG2GR00	133V5463	182
7133VVG2GV00	133V5406	182
7133VVG2LR00	133V5363	182
7133VVG2LV00	133V5306	182
7133XRN2SV00	U 133X5156	280/290
7133XRN2SV1D	U 133X51561D	280/288
7133XRN2VN96	U 133X5196	280
7133XRN2VN9H	U 133X51961D	280
7133XRN3SN96	U 133X5296	282/290
7133XRN3SN9H	U 133X52961D	282/290
7135KBG2GV00	135K04	136/228
7135KBG2LV00	135K03	136/228
72218RG3TE00	221G5303	78
72218RG3TV00	221G5306	20/54
72218RG4UE00	221G5503	78
72218RG4UV00	221G5506	20/54
72218RG5VE00	221G5603	78
72218RG5VV00	221G5606	20/54
7221GBG3VE00	221G1303	76
7221GBG3VN00	221G13	16/52/64
7221GBG3VNH0	221G1330	16/52/64
7221GBG3VV00	221G23	16
7221GBG3VVH0	221G2330	16
7221GBG4VE00	221G1503	76
7221GBG4VN00	221G15	16/52/64
7221GBG4VNH0	221G1530	16/52/64
7221GBG4VV00	221G25	16

Parker Lucifer SA
Fluid Control Division Europe
CH-1227 Carouge-Genève

Tel: +45 63 12 83 00 | Email: ps@hymatik.com | www.hymatik.com | Hvidkaervej 27a, DK-5250 Odense SV, Denmark

global reference number - Valve reference number

Global valve ref.	Valve reference	Page
7221GBG4VV1D	221G25001D	16
7221GBG4VVH0	221G2530	16
7221GBG51E00	221G1603	76
7221GBG51N00	221G16	18/52
7221GBG51NC0	221G1610	64
7221GBG51NCH	221G1631	64
7221GBG51NH0	221G1630	18/52
7221GBG51V00	221G26	18
7221GBG51V1D	221G26001D	16
7221GBG51VH0	221G2630	18
7221GBG61E00	221G1703	76
7221GBG61N00	221G17	18/52
7221GBG61NC0	221G1710	64
7221GBG61NCH	221G1731	64
7221GBG61NH0	221G1730	18/52
7221GBG61V00	221G27	18
7221GBG61V1D	221G27001D	18
7221GBG61VH0	221G2730	18
7221GBG64E00	221G2103	76
7221GBG64N00	221G21	18/54
7221GBG64NC0	221G2110	64
7221GBG64NCH	221G2131	64
7221GBG64NH0	221G2130	18/52
7221GBG64V00	221G2106	18
7221GBG64VH0	221G2136	18
72228BG3TES0	222G3303	78
72228BG3TV00	222G3306	20/54
72228BG4UES0	222G3503	78
72228BG4UV00	222G3506	20/54
72228BG5VES0	222G3603	78
72228BG5VV00	222G3606	20/54
72228RG3TE00	222G5303	78
72228RG3TV00	222G5306	20/54
72228RG4UE00	222G5503	78
72228RG4UV00	222G5506	20/54
72228RG5VE00	222G5603	78
73218BG3TTS0	321G8312	80
73218BG4UTS0	321G8512	80
73218BG5VTS0	321G8612	80
73218BG64TS0	321G8712	82
73218BG75TS0	321G8812	82
73218BG87TS0	321G8912	82
7321BBG3TE00	-	80
7321BBG3TN00	-	56
7321BBG3TNM0	-	56
7321BBG4TE00	-	80
7321BBG4TN00	-	56
7321BBG4TNM0	-	56
7321BBG53E00	-	80
7321BBG53N00	-	56
7321BBG53NM0	-	56
7321BBG64E00	-	80
7321BBG64N00	-	56
7321BBG64NM0	-	58
7321BBG78E00	-	82
7321BBG78N00	-	58
7321BBG78NM0	-	58
7321BBG88E00	-	82
7321BBG88N00	-	58
7321BBG88NM0	-	58
7321BBG99E00	-	82
7321BBG99N00	-	58
7321BBG99NM0	-	58
7321BBGCBNM1	-	58
7321BBGDCNM1	-	58
7321FBF3TN00	E 321F32	34/60/92
7321FBF3TV00	E 321F3202	34/92/110
7321GBG53N00	E 321G36	24/56
7321GBG53NMC	E 321G3610	66
7321GBG53V00	E 321G3606	24
7321GBG64N00	E 321G37	26/58
7321GBG64N1D	E 321G37101D	26
7321GBG64NMC	E 321G3710	66
7321GBG64V00	E 321G3706	24
7321GBG76N00	E 321G38	26/58
7321GBG76NMC	E 321G3810	68
7321GBG76V00	E 321G3806	26
7321GBG88N00	E 321G39	28/58
7321GBG88N3D	E 321G39101D	28
7321GBG88NMC	E 321G3910	68
7321GBG88V00	E 321G3906	26
7321GBG99N00	E 321G40	30/58
7321GBG99N3D	E 321G40101D	30
7321GBG99NMC	E 321G4010	68
7321GBG99V00	E 321G4006	28
7321HBG2SN00	E 321H11	22/90
7321HBG2SV00	E 321H21	22/90/108
7321HBG3TN00	E 321H13	22/90
7321HBG3TV00	E 321H23	22/90/108
7321HBG3TVT0	321H2322	108
7321HBG4UN00	E 321H15	24/90
7321HBG4UV00	E 321H25	22/90/108
7321HBG4UVT0	321H2522	108
7321KBG2SEW0	321K4103	80
7321KBG2SVMW	321K4156	66
7321KBG2SVW0	321K4106	66
7321KBG3TEW0	321K4303	80
7321KBG3TVMW	321K4356	66
7321KBG3TVW0	321K4306	66
7321KBG4TEW0	321K4503	80
7321KBG4TVMW	321K4556	66
7321KBG4TVW0	321K4506	66
7321KBG51EW0	321K4603	80
7321KBG51VMW	321K4656	66
7321KBG51VW0	321K4606	66
7321KBG62EW0	321K4703	80
7321KBG62VMW	321K4756	66
7321KBG62VW0	321K4706	66
73228BG3TTS0	322G8312	82
73228BG4UTS0	322G8512	82
73228BG52TS0	322G8612	82
73228BG64TS0	322G8712	82
73228BG75TS0	322G8812	82
73228BG87TS0	322G8912	82
7322BBG3TN00	-	58
7322BBG4TN00	-	58
7322BBG53N00	-	58
7322BBG64N00	-	60
7322BBG78N00	-	60
7322BBG88N00	-	60
7322BBG99N00	-	60
7322FBF3TN00	322F72	34/60/92
7322FBF3TV00	322F7206	34/92/110
7322GBG4UV00	322G7506	110
7322GBG53N00	322G36	32/58
7322GBG53NC0	322G3610	68
7322GBG53V00	322G3606	32
7322GBG64N00	322G37	32/60
7322GBG64NC0	322G3710	68
7322GBG64V00	322G3706	32
7322GBG76N00	322G38	32/60
7322GBG76NC0	322G3810	68
7322GBG76V00	322G3806	32
7322GBG88N00	322G39	32/60
7322GBG88NC0	322G3910	68
7322GBG88V00	322G3906	32
7322GBG99N00	322G40	32/60
7322GBG99NC0	322G4010	68
7322GBG99V00	322G4006	32
7322HBG2SN00	322H71	30/92
7322HBG2SV00	322H7106	30/90/108
7322HBG3TN00	322H73	32/92
7322HBG3TV00	322H7306	32/92/108
7322HBG4UN00	322H75	32/92
7322HBG4UV00	322H7506	32/92/110
7322KBG2SVW0	322K4106	32
7322KBG3TVW0	322K4306	32
7322KBG4TVW0	322K4506	32
7322KBG51VW0	322K4606	32
7322KBG62VW0	322K4706	32
7325KBG2SVW0	325K4106	34
7325KBG3TVW0	325K4306	34
7325KBG4TVW0	325K4506	34
7325KBG51VW0	325K4606	34
7325KBG62VW0	325K4706	34
7331BAG2KN00	331B02	150/178
7331BAG2KNL2	331B7480	150
7331BAG2KNM0	E 331B74	150
7331BAG2QN00	E 331B01	152
7331BAG4QN00	E 331B21	152
7331LAV4TN1D	E 331L21001D	156
7331LAV4TNM0	E 331L21	158
7332BAG2KN00	332B02	152/178
7332BAG2QN00	E 332B01	154
7332BAG4QN00	E 332B21	154
7341BAG2JNL8	341B3480	188
7341BAG2JNM0	341B3403	188
7341BAG2JNMR	341B34	188
7341BAG2KN00	341B02	198
7341BAG2PN00	E 341B01	198
7341BAG3PN00	E 341B11	200
7341BAG4TN00	E 341B21	212
7341FAS3JNM0	341F3403	190
7341FAS3JNMR	341F34	190

Parker Lucifer SA
Fluid Control Division Europe
CH-1227 Carouge-Genève

Tel: +45 63 12 83 00 | Email: ps@hymatik.com | www.hymatik.com | Hvidkaervej 27a, DK-5250 Odense SV, Denmark

global reference number - Valve reference number

Global valve ref.	Valve reference	Page
7341LAKBGN1D	341L95341D	270
7341LAKBGN90	341L9594	270
7341LAKBGNL2	341L9584	270
7341LAKBGNM0	341L9534	270
7341LAPBGPL2	341L9588	270
7341LAV4TN90	341L2190	216
7341LAV4TNM0	E 341L21	218
7341LDC1LNL8	341L0180	218
7341LDC1LNM8	E 341L01	218
7341LDC1LNMI	E 341L02	218
7341LMG2NNM0	E 341L1130	204/254
7341NAKBHN90	341N3190	260
7341NAKBJN1D	341N31001D	260
7341NAKBJNL2	341N3180	260
7341NAKBJNM0	341N31	260
7341NAKBJNM1	341N21	258
7341NAKBJP1D	341N31081D	260
7341NAKBJPM0	341N3108	260
7341NAKBPN1D	341N32001D	266
7341NAKBPN90	341N3290	266
7341NAKBPNL2	341N3280	266
7341NAKBPNM0	341N32	266
7341NAKBPNM1	341N22	264
7341NRKDJN00	U 341N3150	308
7341NRKDJN1D	U 341N31501D	308
7341NRKDJN92	U 341N3192	310
7341NRKDJN95	U 341N3195	310
7341NRKNNN00	U 341N3250	312
7341NRKNNN92	U 341N3292	312
7341NRKNNN95	U 341N3295	312
7341PAG1JN1D	341P21001D	240
7341PAG1JN90	341P2190	238
7341PAG1JNL2	341P2180	238
7341PAG1JNM0	341P21	238
7341PAG1JPM0	341P2108	238
7341PAG2PN1D	341P22001D	246
7341PAG2PN90	341P2290	244
7341PAG2PNL2	341P2280	244
7341PAG2PNM0	341P22	244
7341PRN2JN00	U 341P3150	296
7341PRN2JN92	U 341P3192	296
7341PRN2JN95	U 341P3195	298
7341PRN2JN9D	U 341P31951D	298
7341PRN3NN00	U 341P3250	300
7341PRN3NN92	U 341P3292	300
7341PRN3NN95	U 341P3295	300
7341PRN3NN9D	U 341P32951D	302
7345BAG2JNMR	345B34	192
7345BAG2PN00	345B04	200
7345BAG4TN00	345B24	212
7345FAS3JNMR	345F34	194
7345LAV4TNM0	345L21	218
7345LDC1LNM8	345L01	220
7345PAG1JNM0	345P21	242
7347LMG2NNM0	E 347L1130	208
7347NAKBHNM0	347N31	262
7347NAKBPNM0	347N32	268
7347NRKDHN92	U 347N3192	314
7347NRKDHNM0	U 347N3150	314
7347NRKNNN00	U 347N3250	314
7347PAG1HN90	347P2190	240
7347PAG1HNM0	347P21	240
7347PAG2PNM0	347P22	244
7347PRN2JN00	U 347P3150	304
7347PRN2JN95	U 347P3195	304
7347PRN3NN00	U 347P3250	304
7347PRN3NN95	U 347P3295	306
7441NAKBJPM0	441N3108	266
7441PAG1JPM0	441P2108	242
7441PRN3NN00	U 441P3250	302
7541LDC1LNR0	541L01	220
7541NAKBJN00	541N01	262
7541PAG1JP00	541P0108	244
7541PRN3NNM1	U 541P0250	302
7547LMG2NN00	547L11	210
-	121K6423	104
-	121M13	8/46
-	121M14	8/46
-	131F4490	136
-	131M14	124/226
-	131M15	124/226
-	131M74	142
-	131M7450	142
-	131M75	138
-	131M7550	138
-	131V5490	182
-	133X01	230
-	221J3301E	118
-	321G3790	26
-	321G3990	26
-	321G4090	28
-	321H1590	22
-	321K31	22/56
-	321K3106	22
-	321K33	22/56
-	321K3306	22
-	321K35	22/56
-	321K3506	22
-	321K36	24/56
-	321K3606	24
-	321K37	24/56
-	321K3706	24
-	331B7490	150
-	341B3490	188
-	341L04	218
-	341L05	218
-	341L11	202/250
-	341L1190	204/254
-	341L9101	196/248
-	341L9201	214
-	341L9504	270
-	341L9598	270
-	347L11	206/252
-	347L9101	198/254
-	347L9201	214

Parker Lucifer SA
Fluid Control Division Europe
CH-1227 Carouge-Genève

Tel: +45 63 12 83 00 | Email: ps@hymatik.com | www.hymatik.com | Hvidkaervej 27a, DK-5250 Odense SV, Denmark

Worldwide distribution
Europe

AUSTRIA
Interapp GmbH
Kolpingstrasse 19
A - 1232 WIEN
Tel (43) 1 616 23 71 Tx 111 235
Fax (43) 1 616 23 71 99

BELGIUM
Parker Hannifin SA-NV
Parc Industriel Sud, Zone II
Rue du Bosquet, 23
BE-1400 Nivelles, Belgique
Tel: 0032 67 280 900
Fax: 0032 67 280 999

C.G.E.S S.A.
Quai des Usines/Werkhuizenkaai 155B.19
BE - 1000 BRUXELLES/BRUSSEL
Tel (32) 2 242 39 79 - 242 37 20
Fax (32) 2 216 30 22

BULGARIA
Honeywell EOOD
14 Iskarsko Chaussee
BG - 1592 SOFIA
Tel (359) 2 79 40 27
Tx (865) 24 315
Fax (359) 2 79 40 90

CROATIA
PROTAL d.o.o.
Novotnijeva14
HR-10000 Zagreb
Tel: +38513092584
Fax: +38513092584

CZECHIA & SLOVAKIA
Parker Hannifin s.r.o.
Dopravaku 723
184 00 Praha 8 – D. Chabry
Tel (420) 2 830 85 221
Fax (420) 2 830 85 360

DENMARK
Granzow A/S
Kobenhavns Trykluft Selskab
Ejby industrivej 26
DK - 2600 GLOSTRUP
Tel (45) 43 20 26 00 Tx 33 450
Fax (45) 43 20 26 99
www.granzow.dk

FINLAND
Parker Hannifin Oy
Ylästöntie 16
FIN-01510 Vantaa
Tel. (358) 947 67 31
Fax.(358) 947 67 32 00

FRANCE
Parker Hannifin SA
Fluid Control Division Europe
Distribution France
Tel : (33) 0 825 07 63 22
Fax : (33) 0 825 07 11 08

GERMANY
Parker Hannifin GmbH
Fluid Control Division Europe
Vertrieb Deutschland
Tel.: +49 (0)6181 – 9543 186
Fax.: +49 (0)6181 – 9543 187

GREECE
Mantanovitch – Catsaros SA
80, Agiou Dimitriou Street.
GR-18545 Piraeus
Tel + 003010 322 61 09
Fax + 0003010 322 38 66

HUNGARY
Parker Hannifin Corporation
Hungarian Trade Representative Office
Vezér u. 156-158
H-1148 Budapest
Tel. (36-1) 252 8137, (36-1) 252 8147
Fax (36-1) 252 8129

ITALY
Parker Hannifin S.p.A.
Fluid Control Division Europe
Via E.Fermi, 5
IT-20060 Gessate (MI) - Italy
Tel. 003902-951251
Fax 003902-95382051

NETHERLAND
Parker Hannifin b.v.
Edisonstraat 1
NL-7575 AT Oldenzaal
Tel (31) (541) 585000
Fax (31) (541) 585459

Getronics Industrial Automation
Donauweg 10
Postbus 652
NL - 1000 AR-AMSTERDAM
Tel (31) 20 586 1534
Fax (31) 20 586 1927

Eriks n.v.
P.O. Box 280
NL - 1800 BK Alkmaar
Tel (31) 72 514 1911
Fax (31) 72 515 5645

NORWAY
Haakon Ellingsen A/S
Rudssletta 54
P.O. Box 184
N - 1351 RUD
Tel (47) 6715 1200
Fax (47) 6715 1201

POLAND
Parker Hannifin Sp.zo.o.
Parowcowa 8B
PL - 02-445 WARSAW
Tel (48) 22 8634942
Fax (48) 22 86344944

PORTUGAL
Contimetra Instrumentos Ind.
Rua Braamcamp 88-4° Dt°
P - 1297 LISBOA Codex
Tel (351) 21 386 05 00
Fax (351) 21 386 16 86

ROMANIA
Hidro Consulting Impex srl
Parker Hannifin Corp – Reprezentanta
Bld Ferdinand nr.27, Sector 2
Bucuresti 0001
Tel. ++(401) 252 13 82
Fax ++(401) 252 33 81

RUSSIA
Parker Hannifin Corporation
Representation Office
Trekhprudniy per. 9/1B/106
103001 Moscow
Tel. (095) 234 0054
Fax (095) 234 0528

SLOVENIA
Parker Hannifin Corporation
Vel. Bucna vas 7
8000 Novo mesto, Slovenia
Tel 00386 68 376650
Fax 00386 68 376651

SPAIN
Elion S.A.
Div. Control de Fluidos
Farell 5
ES - 0814 BARCELONA
Tel (34) 93 298 20 10
Fax (34) 93 431 41 33

SWEDEN
Axel Larsson Maskinaffär AB
Karlsbodavägen 14
P.O.Box 11052
SE - 161 11 BROMMA
Tel (46) 8 555 24 700
Fax (46) 8 555 24 790
www.axel-larsson.se

SWITZERLAND
Bachofen AG
Ackerstrasse 42
Postfach
CH - 8610 USTER
Tel (01) 944 11 11
Fax (01) 944.12.33
E-Mail: info@bachofen.ch
www.bachofen.ch

UNITED KINGDOM
Parker Hannifin Corporation
Climate & Industrial Controls -
Fluid Control Division Europe
Tel: + 44 (0) 1543 574200
Fax: + 44 (0) 1543 456171

UKRAINA
Parker Hannifin Corporation
Vul. Velyka.Vasylkivska 9/2, office 59
01004 Kiev, Ukraine
Tel 380 44 220 74 32
Fax 380 44 220 65 34

TURKEY
Hidroser Hidrolik – Pnömatik
Ekipmanlari San. Ve Tic. A.S.
5. Bölge SB: Bulvari No. 111
34900 Büyükçekmece / Istanbul
Tel. (0212)886 72 70
Fax (0212) 886 69 35

Parker Lucifer SA
Fluid Control Division Europe
CH-1227 Carouge-Genève

Tel: +45 63 12 83 00 | Email: ps@hymatik.com | www.hymatik.com | Hvidkaervej 27a, DK-5250 Odense SV, Denmark

Worldwide distribution
Africa, Middle East Far East and Overseas

ARGENTINA
Parker Hannifin Argentina SAIC
Stephenson 2711
1667 – Tortuguitas
Malvinas Argentinas
Buenos Aires
Tel: (54) (3327) 44-4129
Fax: (54) (3327) 44-4199

AUSTRALIA
Parker Hannifin Australia Pty Ltd
9, Carrington Road
CASTLE HILL, N.S.W. 2154
Australia
Tel: 0061 2 9634 7777
Fax: 0061 2 9842 5111

BRAZIL
Parker Hannifin Industria e Comercio Ltda
Av. Lucas Nogueira Garcez 2181
123300-000 Jacarei, SP
Brazil
Phone: (55) 12 354 5216
Fax: (55) 12 354 5262

CANADA
Parker Hannifin Canada
530, Kipling Avenue
Toronto, M8Z 5E6
Canada
Tel (1) 416 255 1585
Fax (1) 416 255 2107

CHINA REGION
Parker Hannifin Hong Kong Ltd.
8/F, Kin Yip Plaza
9 Cheung Yee Street
Cheung Sha Wan, Kowloon
Hong Kong
Tel: 852 2428 8008
Fax: 852 2480 4256

Parker Hannifin Beijing Office
Suite B2109, 21st. Floor, Hanwei Plaza
No. 7 Guanghua Road, Chaoyang District
Beijing 100004, P.R. China
Tel.: 86 - 10 - 6561 0520
Fax: 86 - 10 - 6561 0527

Parker Hannifin Shanghai Office
Rm 1101, Peregrine Plaza
1325 Huai Hai Road (M)
Shanghai 200031, China
Tel: 86 21 6445 9339
Fax: 86 21 6445 9717

INDIA
Parker Hannifin Corporation
701, Gateway Plaza
Hiranandani Gardens,
Powai, Mumbai - 400 076, India
Tel (91) 22 570 1671
Fax (91) 22 570 5880

JAPAN
Parker Hannifin Japan, Ltd.
Shirokanedai Building 2nd Floor
3-2-10, Shirokanedai,
Minato-ku, Tokyo 108-0071
Tel: +81 3 6408 3901
Fax: +81 3 5449 7202

KOREA
Parker Hannifn Korea Ltd.
902 Dae Heung Building
Kangnam-Ku
Seoul
Korea 135-080
Tel.: 82 – 31-280-3013
Fax: 82 – 31-281-9018

LG-Honeywell Co Ltd.
191 Hangangro-1 Ga, Hongsan-Gu
SEOUL 140 702 KOREA
Tel (82.2) 799 6010
Fax (82.2) 792 9014

MEDITERRANEAN AREA, MIDDLE EAST AND AFRICA
Parker Hannifin S.p.A.
Fluid Control Division Europe
Via E.Fermi, 5
20060 Gessate (MI) - Italy
Tel. 003902-951251
Fax 003902-95382051

MEXICO
Central - South
Parker Hannifin de Mexico SA DE CV
CIC Group Mexico
Antiguo Camino a San Lorenzo 338
Zona Industrial
Toluca, México CP 50010
Tel. Comm. 52 (722)2-722222 ext. 213
Fax. 52 (722)2-722168
North
Parker Hannifin de Mexico SA DE CV
CIC Group Mexico
Boulevard Stiva No. 350
Parque Industrial Stiva Aeropuerto
Apodaca, Nuevo León
Tel. Dir. 52 (81) 83 86 53 14
Tel. Comm. 52 (81) 83 86 41 97 al 99 ext.229
Fax. 52 (81) 83 86 42 02

NEW ZEALAND
Parker Hannifin New Zealand Ltd
103, Harris Road
East Tamaki
Private Bag 94420
Greenmount
Auckland, New Zealand
Tel: 0064 9 273 8944
Fax: 0064 9 373 8943

SINGAPORE & SOUTH EAST ASIA
(Thailand, Malaysia, Philipines, Indonesia)
Parker Hannifin Singapore Pte Ltd
No. 11, 4th. Chin Bee Road
Jurong Town
Singapore 619702
Republic of Singapore
Tel. 0065 261 5233
Fax 0065 265 5125

SOUTH AFRICA
Parker Hannifin (Africa) (Pty) Ltd.
Parker Place
10 Berne Avenue
Aeroport, Kempton Park
P.O. Box 1153
Kempton Park 1620
Republic of South Africa.
Tel: +27 (0)11-961 0700
Fax: +27 (0)11- 3927213

Parker Hannifin Taiwan Co. Ltd
No. 40, Wu Chiuan 3rd Rd
Wuku Industrial Park
Taipei County 248, Taiwan
Republic of China
Tel: 00886 2 2298 8987
Fax: 00886 2 2298 8982

USA
Parker Hannifin Corporation
Fluid Control Division
Skinner Valve
95 Edgewood Avenue. P.O. Box 1450
New Britain, Connecticut 06051
Tel (1) 860 827 2300 Tx 9-9203
Fax (1) 860 827 2384

VENEZUELA
Parker Hanifin Venezuela S.A.
Edf. Draza, PB 1, Esq. Calle
Miraiama Con Av. Principal
Boleita Norte
Account No. 687716
Caracas, Venezuela
Tel (58) 2 238 5422
Fax (58) 2 238 2272

Parker Lucifer SA
Fluid Control Division Europe
CH-1227 Carouge-Genève

NOTES

Parker Lucifer SA
Fluid Control Division Europe
CH-1227 Carouge-Genève

Parker Hannifin Corporation
6035 Parkland Blvd.
Cleveland, Ohio 44124-4141
Telephone: (216) 896-3000
Fax: (216) 896-4000
Web site: www.parker.com

Parker Hannifin Corporation

About Parker Hannifin Corporation

Parker Hannifin is a leading global motion-control company dedicated to delivering premier customer service. A Fortune 500 corporation listed on the New York Stock Exchange (PH), our components and systems comprise over 1,400 product lines that control motion in some 1,000 industrial and aerospace markets. Parker is the only manufacturer to offer its customers a choice of hydraulic, pneumatic, and electromechanical motion-control solutions. Our Company has the largest distribution network in its field, with over 7,500 distributors serving more than 400,000 customers worldwide.

Parker's Charter

To be a leading worldwide manufacturer of components and systems for the builders and users of durable goods. More specifically, we will design, market and manufacture products controlling motion, flow and pressure. We will achieve profitable growth through premier customer service.

Product Information

North American customers seeking product information, the location of a nearby distributor, or repair services will receive prompt attention by calling the Parker Product Information Center at our toll-free number: 1-800-C-PARKER (1-800-272-7537). In the UK, a similar service is available by calling 0500-103-203.

The Aerospace Group is a leader in the development, design, manufacture and servicing of control systems and components for aerospace and related high-technology markets, while achieving growth through premier customer service.





The Climate & Industrial Controls Group designs, manufactures and sells system controls and protectors to refrigeration and air-conditioning customers worldwide. The Group also provides solenoid valves, process control valves, and gerotors for a multitude of industrial applications.

The Fluid Connectors Group designs, manufactures and markets rigid and flexible connectors, and associated products used in pneumatic and fluid systems.





The Seal Group designs, manufactures and distributes industrial and commercial sealing devices and related products by providing superior quality and total customer satisfaction.

The Hydraulics Group designs, produces and markets a full spectrum of hydraulic components and systems to builders and users of industrial and mobile machinery and equipment.





The Filtration Group designs, manufactures and markets quality filtration and clarification products, providing customers with the best value, quality, technical support, and global availability.

The Automation Group is a leading supplier of pneumatic and electromechanical components and systems to automation customers worldwide.





The Instrumentation Group is a global leader in the design, manufacture and distribution of high-quality critical flow components for worldwide process instrumentation, ultra-high-purity, medical and analytical applications.

hymatik

Note: this publication constitutes no contract between us
and our customers and may be changed without notice.

Parker Lucifer SA
Fluid Control Division Europe
16, Ch. du Faubourg de Cruseille
CH-1227 Carouge - Geneva
Tel. +41 22 30 77 111 Fax +41 22 30 77 110
www.parker.com/lucifer

Catalogue 8930/GB
October 2003