



aerospace
climate control
electromechanical
filtration
fluid & gas handling
hydraulics
pneumatics
process control
sealing & shielding





Airline Accessories



Parker

ENGINEERING YOUR SUCCESS.

WARNING — USER RESPONSIBILITY

FAILURE OR IMPROPER SELECTION OR IMPROPER USE OF THE PRODUCTS DESCRIBED HEREIN OR RELATED ITEMS CAN CAUSE DEATH, PERSONAL INJURY AND PROPERTY DAMAGE.

- This document and other information from Parker-Hannifin Corporation, its subsidiaries and authorized distributors provide product or system options for further investigation by users having technical expertise.
- The user, through its own analysis and testing, is solely responsible for making the final selection of the system and components and assuring that all performance, endurance, maintenance, safety and warning requirements of the application are met. The user must analyze all aspects of the application, follow applicable industry standards, and follow the information concerning the product in the current product catalog and in any other materials provided from Parker or its subsidiaries or authorized distributors.
- To the extent that Parker or its subsidiaries or authorized distributors provide component or system options based upon data or specifications provided by the user, the user is responsible for determining that such data and specifications are suitable and sufficient for all applications and reasonably foreseeable uses of the components or systems.

Index

Description	Page nº
Quick exhaust valves P4Q	4
Quick exhaust valves SV	5
Non Return Valves VB	6 - 7
Shuttle Valves	8
Back Pressure Sensors	9 - 10
Speed Flow Control Valves	11
Pressure Switches	12 - 13
Exhaust Silencers	14 - 16
Strainers	17 - 18

- Increases piston speeds, super sensitive diaphragm
- Extremely low operating differential
- Virtually stiction free
- May be used as differential shuttle valve
- High temperature option



Operating information

Operating pressure:	0,2 to 10 bar
Operating temperature (Standard):	-10°C to +80°C
Operating temperature (High):	-10°C to +180°C
Body material:	Aluminium
Diaphragm material (Standard):	Nitrile
Diaphragm material (High):	Flurocarbon

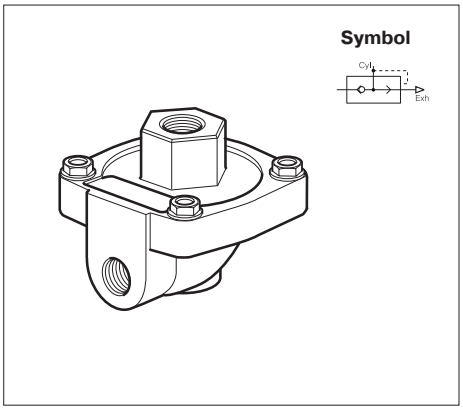

Standard version

Port Size	Cv Rating	Weight kg	Order Code
G1/4	2,3	0,20	**P4Q-BA12**
G3/8	3,6	0,18	**P4Q-BA13**
G1/2	6,6	0,50	**P4Q-CA14**
G3/4	7,3	0,44	**P4Q-CA16**

High temperature version

Port Size	Cv Rating	Weight kg	Order Code
G1/4	2,3	0,20	-
G3/8	3,6	0,18	**P4Q-BV13**
G1/2	6,6	0,50	**P4Q-CV14**
G3/4	7,3	0,44	**P4Q-CV16**

Dimensions (mm)

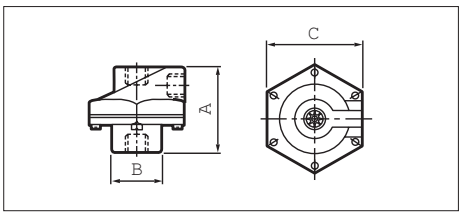

Port Size	A	B	C
G1/4	52	25	62
G3/8	52	25	62
G1/2	73	38	86
G3/4	73	38	86

Characteristics Pressures quoted as gauge pressure

Characteristics	Symbol	Unit	Description				
General features							
Type			Poppet valve				
Mounting			Directly in tubing				
Tube connection			Thread				
Port size			G1/8	G1/4	G3/8	G1/2	G3/4
Gewicht (Masse)		kg	0.086	0.147	0.150	0.314	0.450
Installation			In any position				
Ambient- and Medium temperature range	T_{min} T_{max}	°C °C	-18 +70	Note: When using below freezing point (0 °C) it is necessary to consult us			
Material							
– Housing			Brass nickel-plated				
– Membrane			Synthetic material				
Medium			Filtered compressed air				
Lubrication			Oil mist lubrication compatible with Buna N				
Pneumatische characteristics							
Nominal pressure	p_n	bar	6				
Operating pressure range	p_{min} p_{max}	bar bar	0.3 10				
Nominal flow 1 2	Q_N	l/min	680	1200	2300	3400	3200
Nominal flow 2 3	Q_N	l/min	1100	2100	4900	6100	8750

Dimensions (mm)

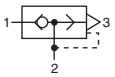

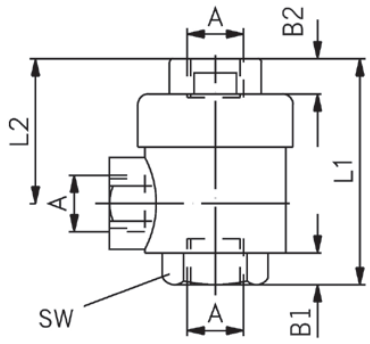



Dimensions (mm) and order instructions

Type	A	B1	B2	L1	L2	SW	Order Code
SV-06-2	G1/8	6.5	6.5	42.0	27	15	PD39152
SV-08-2	G1/4	9.5	9.0	53.0	35	19	PD39153
SV-10-2	G3/8	9.5	9.5	55.5	36	21	PD39154
SV-15-2	G1/2	13.5	13.0	72.0	43	26	PD39155
SV-20-2	G3/4	18.0	18.0	88.0	55	32	PD39156

Tel: +45 63 12 83 00 | Email: ps@hymatik.com | www.hymatik.com | Hvidkaervej 27a, DK-5250 Odense SV, Denmark

- Aluminium bodies
- Long life
- Low opening pressure
- Full flow in one direction only



Operating information

Operating pressure:	0,1 to 10 bar
Operating temperature:	-20°C to +70°C
Body material:	Anodised aluminium
Seal material	Nitrile

VB - Aluminium

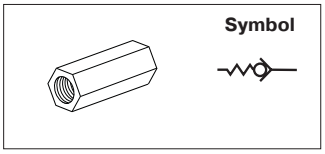

Port size	Weight kg	Order Code
G1/8	0,01	**VB12-Q-NQ-5**
G1/4	0,01	**VB22-Q-NQ-5**
G1/2	0,05	**VB42-Q-NQ-5**

Dimensions (mm)

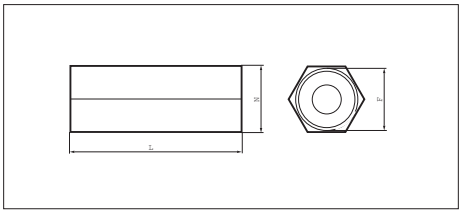

Order Code	F	L	N
VB12-Q-NQ-5	G1/8	31	14
VB22-Q-NQ-5	G1/4	40	17
VB42-Q-NQ-5	G1/2	59	27

PDE2566TCUK

Non return Valves

RV9

RV9 series check valves are designed for contiuous flow (not suitable for pulsating flow).

Suitable for:
– 100% oxygen
– natural gas
– vacuum



Characteristics Pressures quoted as gauge pressure

Characteristics	Symbol	Unit	Description					
General features								
Type			Spring loaded check valve					
Mounting			Directly in tubing					
Tube connection			Thread					
Port size			G3/8	G1/2	G3/4	G1	G11/4	G11/2
Weight (mass)		kg	0.18	0.19	0.27	0.49	0.74	0.98
Installation			In any position					
Ambient- and Medium temperature range	T_{min} T_{max}	°C °C	-20 +110 air		0 +90° water		-20 +60 gas	
			Note: When using below freezing point (0 °C) it is necessary to consult us					
Medium			Filtered compressed air, cold and warm water, various oils					
Lubrication			Oil mist lubrication compatible with Buna N					
Material			Housing: brass Valve head: stainless steel Seal: synthetic rubber					
Pneumatic characteristics								
Operating pressure range at +20°C	p_{max}	bar	25	25	25	25	18	18
Flow direction			In one direction					

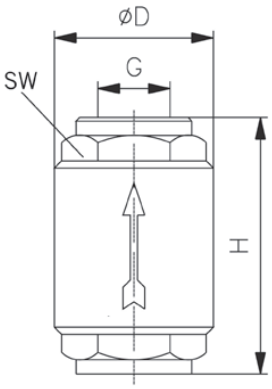

Dimensions (mm) and order instructions

Type *	G	ØD	H	SW	Order Code
RV9-10	G3/8	34.5	54	23	PD 36114
RV9-15	G1/2	34.5	57	27	PD 36335
RV9-20	G3/4	41.5	64	33	PD 36336
RV9-25	G1	48.0	75	40	PD 36337
RV9-32	G11/4	60.5	82	50	PD 36338
RV9-40	G11/2	71.0	93	55	PD 36339

* other sizes on request



PDE2566TCUK

Shuttle valves

- Allows two separate signals to be applied to the air pilot
- 0,6 bar differential, Viton seals as standard



Operating information

Operating pressure:	1,3 to 17 bar
Flow:	See table below
Operating temperature:	-10°C to +60°C
Body material M5 and G1/8:	Aluminium
Body material G1/4	Zinc
Shuttle ball material:	Plastic

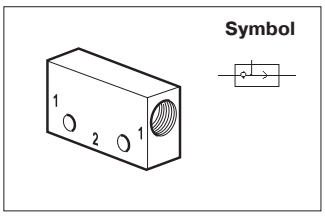

Port Size	Qmax input at 6 bar, l/min	Weight kg	Order Code
M5	36	0,040	**M33005**
G1/8	509	0,100	**B43005B**
G1/4	1076	0,172	**B53005A**

Dimensions (mm)

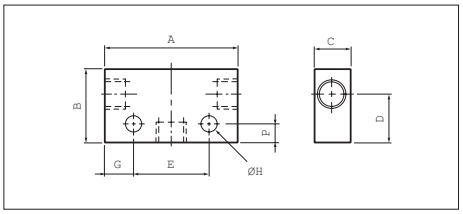

Port Size	A	B	C	D	E	F	G	H
M5	27,5	24	15	16,0	15	6	6,3	3,2
G1/8	44,0	24	15	16,0	25	6	9,5	4,5
G1/4	52,0	30	22	20,5	35	10	8,5	5,5

PDE2566TCUK

Back pressure sensors - Modular

PWS

- Detects stoppage of a cylinder due to a pressure drop in the exhaust chamber
- For direct mounting to cylinders
- Choice of pneumatic, electrical or electronic output
- Wide range of sizes



Operating information

Operating pressure:	0 to 10 bar
Permissible fluids:	Air or neutral gas 50micron or filtration, lubricated or not
Operating temperature:	-15°C to +60°C
Storage temperature:	-40°C to +70°C
No. of operations with dry air at 6 bar 20°C 1 Hz:	10 million
Maximum operating frequency:	10 Hz
Output characteristics:	Pneumatic: Flow at 6 bar 90l/mn
	Electrical: C/contact 2,5A/250V AC, 5W 48V DC
	Electronic: PNP N/C or N/O 10 to 30V 75 mA DC
Maximum connecting torque:	M5 = 1Nm; 1/8 = 8Nm; 1/4 = 12Nm; 3/8 = 30Nm; 1/2 = 35Nm
Body material:	Thermo plastic
Connection thread:	Brass

Dimensions and piloting pressures next page

Assembly

All back pressure sensors are a combination of two distinct parts:
a banjo socket + a plug-in sensor.

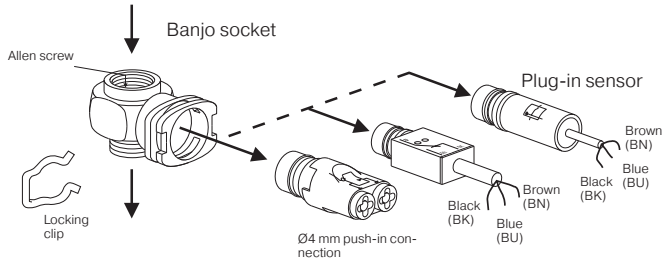

Connection

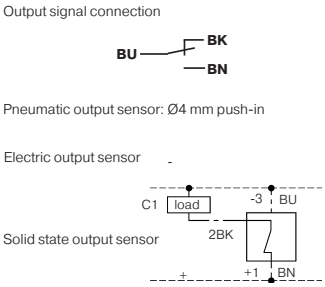

Banjo Sockets

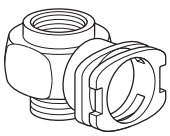

Thread Size for Cylinder Port	Female Thread	Tool Required	Weight Kg	Order Code
M5	M5	8mm flat spanner	0,04	**PWS-B155**
G1/8	G1/8	5mm Allen key	0,04	**PWS-B188**
G1/4	G1/4	8mm Allen key	0,05	**PWS-B199**
G3/8	G3/8	10mm Allen key	0,07	**PWS-B133**
G1/2	G1/2	12mm Allen key	0,11	**PWS-B122**

Plug-in Sensors

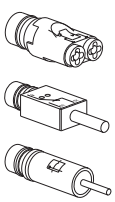

Sensing function	Output function	Output Connection	Output characteristics	Weight kg	Order Code
Exhaust back pressure decay	Pneumatic	Push-in Ø4mm	NO valve flow rate at 6 bar 90 l/mn	0,09	**PWS-P111**
	Electrical ~Ve = 3A	3 wires 0,5mm² length 2m	CO contact 12 to 230V ~ / 10VA* 12 to 48 VDC/5W*	0,08	**PWS-M1012**
	Solid state	3 wires 0,1mm² length 2m	PNP type NC 10/30VDC** 75 mA, NO	0,07 0,07	**PWS-E101** **PWS-E111**

* Suitable for low currents : 250 V ~ / 4 mA ; 24 VDC / 10 mA ** Including ripple

PDE2566TCUK

Back pressure sensors - Mono block

PWS

- Detects stoppage of a cylinder due to a pressure drop in the exhaust chamber
- Single unit design
- For direct mounting to cylinders
- Pneumatic output
- Wide range of sizes



Operating information

Operating pressure:	0 to 10 bar
Permissible fluids:	Air or neutral gas 50micron or filtration, lubricated or not
Operating temperature:	-15°C to +70°C
Storage temperature:	-20°C to +70°C
No. of operations with dry air at 6 bar 20°C 1 Hz:	10 million
Maximum operating frequency:	1 Hz
Output characteristics:	Flow @ 6 bar 90l/m
Maximum connecting torque:	M5 = 1Nm; 1/8 = 8Nm; 1/4 = 12Nm; 3/8 = 30Nm; 1/2 = 35Nm
Body material:	Zinc alloy / Thermo plastic
Connection thread:	Brass

Plug-in & Monoblock back pressure sensors	Pilot	Depilot
	operating pressure	operating pressure
	6bar	6bar
PWS-P111	4,4	0,4
PWS-M1012	1,5	0,6
PWS-E101 & E111	1,5	0,6
PWS-C	1,6 ±0,2	0,3

Back Pressure Sensor for Cylinder Mounting

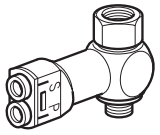

Symbol



Thread Cylinder Port	Thread Supply Port	Bore Ømm	Weight kg	Order Code
M5	M5	2	0,10	**PWS-C5145**
G1/8	G1/8	5	0,11	**PWS-C5148**
G1/4	G1/4	7	0,10	**PWS-C5149**
G3/8	G3/8	10	0,17	**PWS-C5143**
G1/2	G1/2	14	0,15	**PWS-C5142**

Back Pressure Sensors - Mono block - Dimensions (mm)

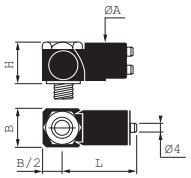

Order Code	ØA	B	H	L
PWS-CS145	19	11,0	16,0	42
PWS-CS148	22	16,5	29,0	40
PWS-CS149	22	23,5	26,0	43
PWS-CS143	22	23,5	36,5	43
PWS-CS142	22	32,0	29,5	48

Back Pressure Sensors - Modular - Dimensions (mm)

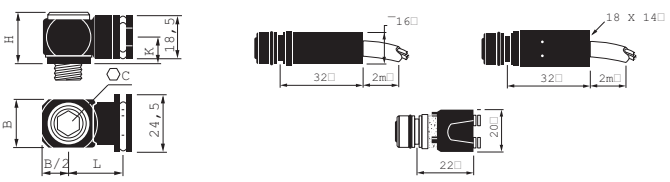

Order Code	C	B	H	K	L
PWS-B155	8	11	16,5	10	17
PWS-B188	5	16	20,0	10	20
PWS-B199	8	21	20,0	10	22
PWS-B133	10	28	22,0	12	25
PWS-B122	12	33	26,0	14	26

PDE2566TCUK

Speed flow control valves

VQB

- Integral mounting holes
- Screw driver adjustable
- Panel mounting option



Operating information

Working pressure	Max 10 bar
Working temperature	-20 °C to +70 °C

Flow Control Valves with By-pass

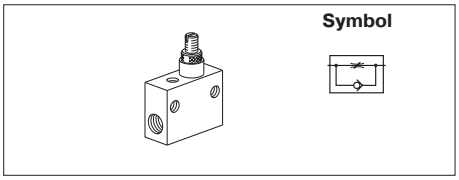

Thread	Number of turns	Qmax input at 6 bar, l/min	Weight kg	Order Code
G1/8	13	72	0,03	**VQB12-Q-0X-5***
G1/8	13	240	0,03	**VQB12-Q-0-5**
G1/4	13	1320	0,07	**VQB22-Q-0-5**
G1/2	13	3600	0,27	**VQB42-Q-0-5**

Flow Control Valves with By-directional Control

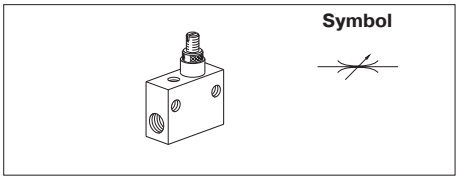

Thread	Number of turns	Qmax input at 6 bar, l/min	Weight kg	Order Code
G1/8	13	72	0,03	**VQB12-0X-5***
G1/8	13	240	0,03	**VQB12-0-5**
G1/4	13	1320	0,07	**VQB22-0-5**
G1/2	13	3600	0,26	**VQB42-0-5**

* Extra fine adjustment

Knob and nut for Panel Mounting

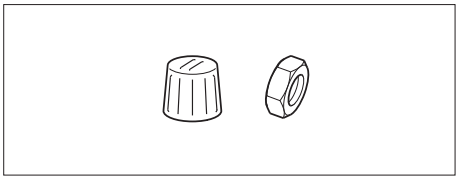

To Suit	Weight kg	Order Code
VQB12	0,008	**9128177212**
VQB22	0,014	**9128177222**
VQB42	0,037	**9128177242**

Flow Control Valves - Dimensions (mm)

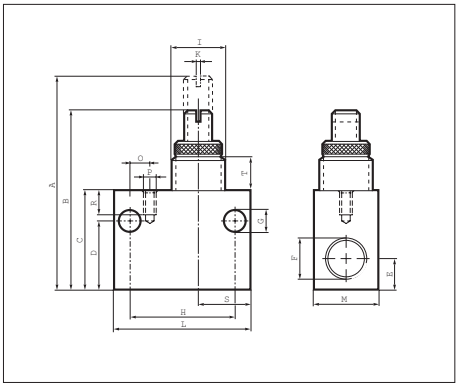

Order Code	A	B	C	D	E	F	G	H	I
VQB12-(Q)-0-5	49	42	22	15	6,5	G1/8	5,8	24	M12x1
VQB12-(Q)-0-5	49	42	22	15	6,5	G1/8	5,8	24	M12x1
VQB22-(Q)-0-5	64	53	30	21	8,5	G1/4	7,0	32	M16x1
VQB42-(Q)-0-5	99	85	50	36	16,5	G1/2	7,0	50	M24x1,5

Order Code	K	L	M	O	P	R	S	T
VQB12-(Q)-0-5	1,2	32	15	-	-	-	13,5	8,8
VQB12-(Q)-0-5	1,2	32	15	-	-	-	13,5	8,8
VQB22-(Q)-0-5	1,2	42	20	6,0	M4	7	16,0	10,0
VQB42-(Q)-0-5	1,8	62	30	19,5	M4	7	20,5	15,2

PDE2566TCUK

Pressure Switches



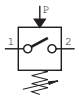

Make contact



Break contact

Switching function:
Make contact
– closes the circuit when the set pressure is reached
Break contact
– interrupts the circuit when the set pressure is reached

Characteristics Pressures quoted as gauge pressure

Characteristics	Symbol	Unit	Description
Type			Break contact or make contact – see table at the bottom
Setting range	$p_{min/max}$	bar	See table at the bottom
Safety pressure relief	p_{max}	bar	300
Port size			G1/8, G1/4
Weight (mass)		kg	0.090
Material			
– Housing			Passivated steel
– Diaphragm			Buna N
Medium and ambient temperature range	T_{max}	°C	+100
Switch back difference		%	Max. 5 – 15
Voltage	U	V	Max. 48
Current	I	A	0.5
Electrical connection			Plug contacts, plug
Degree of protection		IP	65 with plug
Switching frequency		s/min	Max. 200

Order instructions

Type	Port size A	Function	Setting range [bar]	Order Code
PR / 0.1-1 NC ST 1/4 48	G1/4	Break contact	0.1-1	KL3439
PR / 0.1-1 NO ST 1/4 48	G1/4	Make contact	0.1-1	KL3440
PR / 1-10 NC ST 1/8 48	G1/8	Break contact	1-10	KL3437
PR / 1-10 NC ST 1/4 48	G1/4	Break contact	1-10	KL3436
PR / 1-10 NO ST 1/8 48	G1/8	Make contact	1-10	KL3438
PR / 1-10 NO ST 1/4 48	G1/4	Make contact	1-10	KL3435

Dimensions (mm)

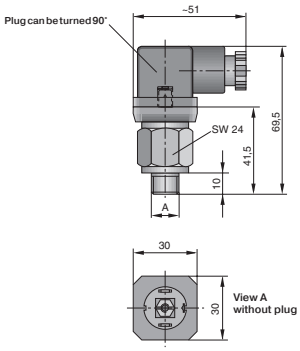

Pressure Switches





Make contact



Break contact

Switching function:
Make contact
– closes the circuit when the set pressure is reached
Break contact
– interrupts the circuit when the set pressure is reached

Characteristics Pressures quoted as gauge pressure

Characteristics	Symbol	Unit	Description
Type			Break contact oder Make contact – see table at the bottom
Setting range	$p_{min/max}$	bar	See table at the bottom
Safety pressure relief	p_{max}	bar	300
Port size			G1/8, G1/4
Weight (mass)		kg	0.075
Material			
– Housing			Passivated steel
– Diaphragm			Buna N
Mediums- und Ambient temperature range	T_{max}	°C	+100
Switch back difference		%	Max. 5 – 15
Voltage	U	V	Max. 48
Current	I	A	0.5
Electrical connection			Flat pin plug, protective cap
Degree of protection		IP	65 with protective cap
Switching frequency		s/min	200

Order instructions

Type	Port size A	Function	Setting range [bar]	Order Code
PR / 0.2-1 NO SR 1/4 48	G1/4	Make contact	0.2-1	KL3445
PR / 0.1-1 NC SR 1/4 48	G1/4	Break contact	0.1-1	KL3454
PR / 0.1-1 NO SR 1/4 48	G1/4	Make contact	0.1-1	KL3455
PR / 1-10 NC SR 1/8 48	G1/8	Break contact	1-10	KL3452
PR / 1-10 NC SR 1/4 48	G1/4	Break contact	1-10	KL3451
PR / 1-10 NO SR 1/8 48	G1/8	Make contact	1-10	KL3453
PR / 1-10 NO SR 1/4 48	G1/4	Make contact	1-10	KL3450

Dimensions (mm)

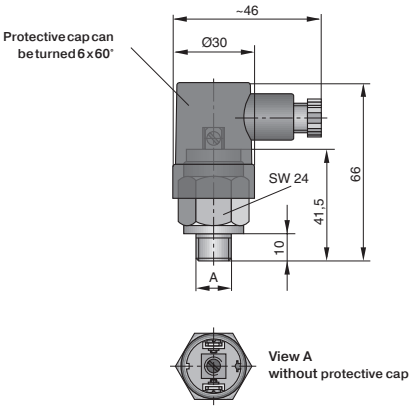

Tel: +45 63 12 83 00 | Email: ps@hymatik.com | www.hymatik.com | Hvidkaervej 27a, DK-5250 Odense SV, Denmark

PDE2566TCUK

Exhaust silencers

- Sintered metal
- All metal versions for heavy duty applications
- Versions with push-in connections
- High noise level reduction
- Low back pressure generation



Operating and additional information

Plastic	Working temperature:	-10°C to +80°C		
	Efficiency	92%		
Metal	Working temperature:	-10°C to +74°C	Working pressure	up to 17 bar

Push-in Series

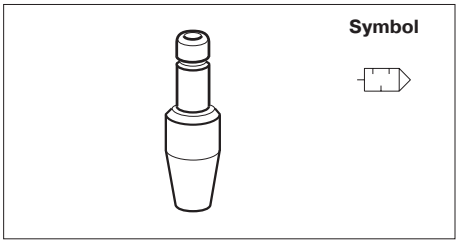

Port mm	Height on Push-in	Weight g	Order Code
4	20,0	0,040	**PXC-X14**
6	35,5	0,025	**PZC-S1006**
8	34,0	0,030	**PZC-S1008**

Exhaust silencers

Sintered Bronze Series

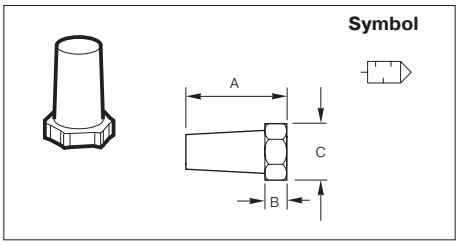

Port mm	A	Ø B	A/F C	Weight g	Order Code
G1/8	15	8	13	0,060	**9721900404**

Self Cleaning, 48 series

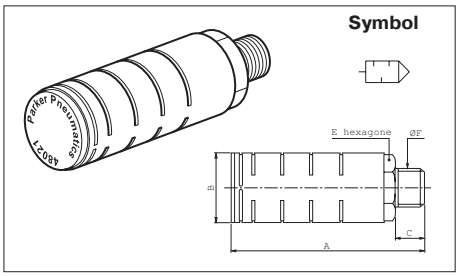

Port thread	A	Ø B	C	A/F E	Weight g	Order Code
1/8	52	16	8	12	0,010	**48021000**
1/4	53	22,5	10	17	0,018	**48041000**
3/8	78	32	12,7	24	0,042	**48061000**
1/2	78	32	14	24	0,042	**48081000**
3/4	12	39	16	33	0,082	**48121000**
1	120	39	20	33	0,082	**48161000**

ESB Series with BSPT(R) threads
ES with NTP threads

Heavy Duty Series

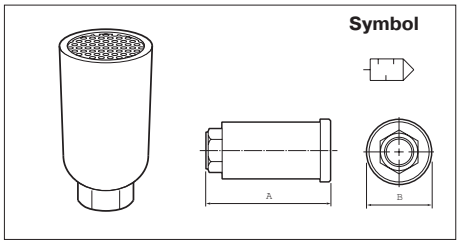

Port Female	A	Ø B	C	Weight g	Order Code
G3/8	83	37	-	0,124	**P6M-MA13**
G1/2	105	51	-	0,362	**P6M-MA14**
G3/4	143	73	-	0,670	**P6M-MA16**
G1	143	73	-	0.666	**P6M-MA18**

Stainless Steel Mufflers Series

Corrosion resistant mufflers for harsh environments

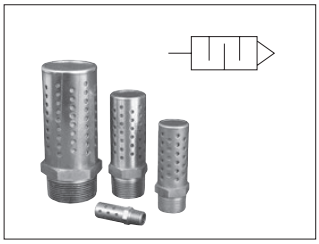

Port Size	Construction	Threads	Dimensions In. (mm) Width	Lenght	Order Code
1/4	Stainless Steel	Male. NPT	0.56 (14.2)	1.75 (44.5)	**5500A2004**
1/2	Stainless Steel	Male. NPT	0.87 (22.1)	2.75 (69.7)	**5500A4004**
1	Stainless Steel	Male. NPT	1.31 (33.3)	3.87 (98.3)	**5500A6004**
2	Nickel plated	Male. NPT	2.37 (60.2)	5.50 (139.7)	**5500A9004***

* Nickel plated

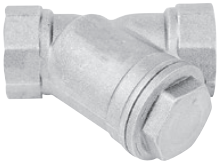

ES Series - Silencer

The silencer is designed to give superior performance in noise control with a minimum effect on air efficiency. "Trimline" design allows location in the tightest places without extra plumbing and fittings. Fits directly into the exhaust port of more than 90% of present commercial valves. Slotted body permits rapid discharge of air without undesirable back pressure. Unique nylon screen element resists dirt buildup or clogging.





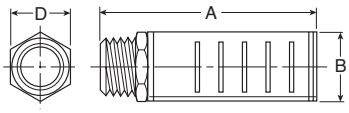

Operating information

Operating pressure: 250 psig (Air) max.

Operating temperature:* 0°F to 300°F

* Ambient temperatures below freezing require moisture-free air. Ambient temperatures below freezing and above 180° require lubricants especially selected for suitability at these temperatures. Pneumatic valves should be used with filtered and lubricated air.

Pipe Thread	Flow scfm @ 100 psig inlet	Dimensions			Order Codes NPTF	BSPT (R)
		A	B	D		
1/8"	115	1.85	0.81	0.63	ES12MC	ESB12MC
1/4"	129	1.85	0.81	0.63	ES25MC	ESB25MC
3/8"	219	3.31	1.26	1.00	ES37MC	ESB37MC
1/2"	549	3.31	1.26	1.00	ES50MC	ESB50MC
3/4"	893	4.56	2.01	1.62	ES75MC	ESB75MC
1"	1,013	4.56	2.01	1.62	ES100MC	ESB100MC
1-1/4"	1,486	5.69	2.88	-	ES125MC	ESB125MC
1-1/2"	1,580	5.69	2.88	-	ES150MC	ESB150MC

Dimensions in mm

Tel: +45 63 12 83 00 | Email: ps@hymatik.com | www.hymatik.com | Hvidkaervej 27a, DK-5250 Odense SV, Denmark

PDE2566TCUK

Strainers for tubings

SFS

Characteristics			Pressures quoted as gauge pressure						
Characteristics	**Symbol**	**Unit**	**Description**						
General features									
Type			Filter element for solid particles						
Port size			G1/4	G3/8	G1/2	G1	G11/4	G11/2	G2
Weight (mass)		kg	0.170	0.155	0.165	0.460	0.690	1.010	1.535
Pore size		µm	45						
Installation			horizontal, sieve facing dows						
Medium and ambient temperature	T_{min} T_{max}	°C °C	0 +150						
Material			Brass (Filter element: sinter bronze)						
Pneumatic characteristics									
Operating pressure range	p_{min} p_{max}	bar bar	–1 +16						
Nominal flow [1]	Q_N	l/min	1700	3700	7500	on request	on request	on request	on request
Recommended flow [1]	Q	l/min	783	1320	2570				

[1] at 6 bar and Δp = 0,2 bar

Dimensions in mm

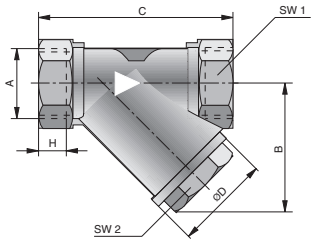

Operating principle:
When air flows through the filter element, any large
particles are retained.
The pore size for the sinter- bronze filter element is
45 µm

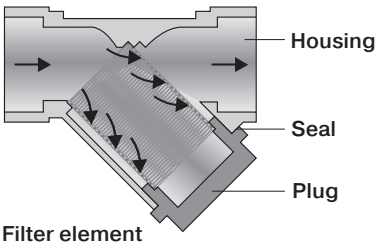

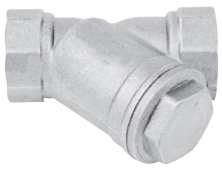

Strainers for tubings

Dimension (mm)

Di-men-sion	Port size (A)								
	G1/8	G1/4	G3/8	G1/2	G3/4	G1	G11/4	G11/2	G2
ØD	8	8	10	15	20	25	32	40	50
B	40	40	40	40	50	60	68	75	90
C	55	55	55	58	70	90	96	106	126
H	10.0	10.0	10.3	10.5	12.0	17.0	17.5	17.5	20
SW 1	21	21	21	25	31	38	49	55	68
SW 2	20	20	20	20	27	32	35	38	46

Order instructions

Port size	Strainers with sinter bronze filter element		Spare parts Sinter element (45 µm)	
	Type	Order Code	Type	Order Code
G1/4	SFS-1/4	KL 2001	SFSE-1/4	KL 2015
G3/8	SFS-3/8	KL 2002	SFSE-3/8	KL 2015
G1/2	SFS-1/2	KL 2003	SFSE-1/2	KL 2015
G3/4	SFS-3/4	KL 2004	SFSE-3/4	KL 2016
G1	SFS-1	KL 2005	SFSE-1	KL 2017
G11/4	SFS-1 1/4	KL 2006	SFSE-1 1/4	KL 2018
G11/2	SFS-1 1/2	KL 2008	SFSE-1 1/2	KL 2019
G2	SFS-2	KL 2008	SFSE-2	KL 2020

PDE2566UK 01/2023 www.parker.com

European Headquarters
La Tuilière 6, 1163 Etoy,
Switzerland
Tel: +41 21 821 85 00

Your authorized distributor

© 2022 Parker Hannifin Corporation. All rights reserved.