

Cylinder and Accumulator Division Europe

DISTRIBUTION CATALOGUE 2022

Parker

PTS
Parker Tracking System

ENGINEERING YOUR SUCCESS.

CADE

Cylinder and Accumulator Division Europe

Made in Europe - serving all markets and industries

Parker CADE UK
Sandycroft, (Chester)

Parker CADE France
Colombes

Parker CADE Italy
Arsago



Parker CADE Sweden
Falköping

Parker CADE Poland
Wroclaw

Parker CADE Germany
Cologne

www.parker/acde

Our product range - click for more detail:


Bladder Accumulators


Piston Accumulators


Diaphragm Accumulators


Pulsation Dampers


Attenuators


Gas Bottles


Accessories


Air-Oil Cooler



Water-Oil Cooler


QPM Pump


Industrial Hydraulic Cylinders


Mill-type Cylinders



Helical Actuators


Lightraulics®

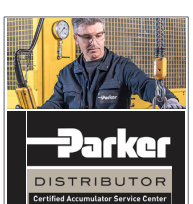

Service Center

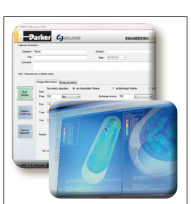
Services & Support

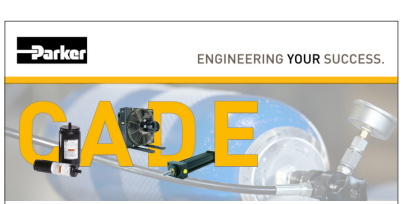

Distribution Programme 2022

Tel: +45 63 12 83 00 | Email: ps@hymatik.com | www.hymatik.com | Hvidkaervej 27a, DK-5250 Odense SV, Denmark

Contents

ACCUMULATORS		
Bladder Accumulator EHV Series	Gas Valve C & D	05
Bladder Accumulator EHV Series	Gas Valve B	06
Bladder Accumulator UK-Series	Gas Valve F	07
Bladder Accumulator Spare Parts		09
Bladder Kit		09
Accumulator Set		10
Global Bladder Accumulator		11
Accumulator Accessories	Clamps, Brackets, Charging Sets	12
Senso Node		13
✸ Safety Block, SB Series		14
✸ Crimped Piston Accumulators	275 & 350 bar	16
✸ Piston Accumulator EHP Series		18
Gas Bottles		20
Pressure Relief Valve		20
Accumulator Sizing Software		21
COOLERS		
Air-Oil Cooler with AC Motor, LAC Series		22
Air-Oil Cooler with DC Motor, LDC Series		24
Air-Oil Cooler with AC Motor & Pump, LOC Series		26
✸ Quiet DC Cooler, QDC 24 VDC Series		30
Quiet Air-Oil Cooler with AC Motor, QAC Series		32
Gerotor Pump, QPM3 Series		34
Cooler Sizing App		35
CYLINDERS		
Hydraulic Industrial Cylinder, HMIF Series		36
✸ My Parker		37

If you are using the electronic version of this catalogue this icon will take you back to this CONTENT page upon clicking.

Parker declares that all products featured in this catalogue conform to REACH and RoHS regulations.

REACH compliant

RoHS compliant

Tel: +45 63 12 83 00 | Email: ps@hymatik.com | www.hymatik.com | Hvidkaervej 27a, DK-5250 Odense SV, Denmark



VALVE TYPE C: NEW STANDARD FOR EHV/EBV BLADDER ACCUMULATORS*

SAFETY

SPACE SAVING

NO WEAKNESS

The new standard features an internal valve, thus

- no radial stress applied to valve
- no risk of disconnecting the gas valve when unscrewing the charging kit
- same length with protective cap; shorter valve means more space for charging kit connection
- avoiding fracture in case of shock
- charging adapter included in standard charging kit
- single adapter for controlling and refilling gas - fits the complete EHV and EBV range

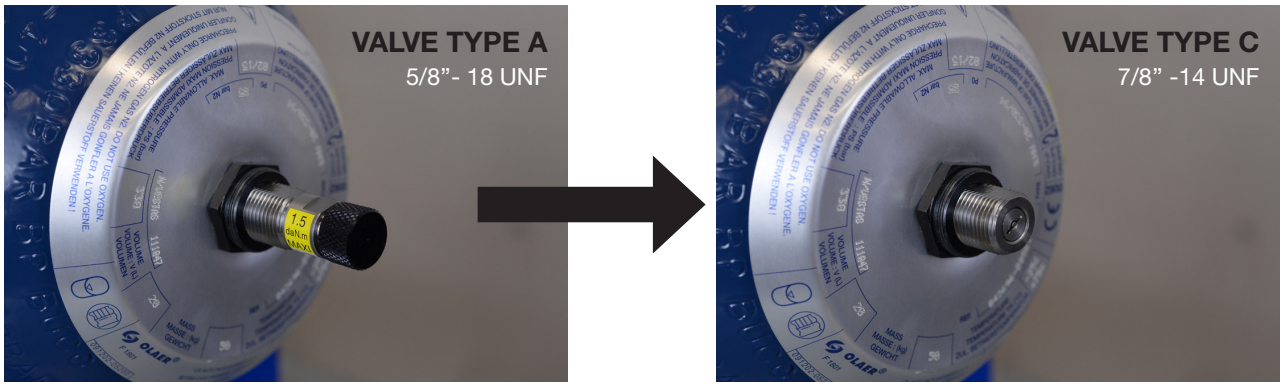

***All EHV (1L - 57L) and EBV (up to 200 L) bladder accumulators will be supplied with valve type C from now on.**

Bladder Accumulator EHV Series, C & D Valve

The EHV bladder accumulator series is designed for high pressure hydraulic systems.

- Standard version (Carbon Steel shell/NBR mix) compatible with mineral oils.
- According to PED 2014/68/EU, EN 14359, Fluid Group 2.

A wider range of products (material, pressure, design, regulation, connection and other options) and more technical information is available on parker.com

Part number	Type	Valve	Clamps	Support Bracket	Effective Gas volume Litres	Max. Working pressure (PS) bar	Admissible Accumulator Temperature min/max (°C)	Weight kg	Dimensions in mm			Seal O-ring
			Model (quantity) Part number	Model Part number					A max Height	øD	G	
10876301120	EHV 0.2-350/00-A20AD-200*	D	A56 (1) 20149203625		0,17	350	- 6/+80	2,5	268	58	G ½"	18x2
10876401125	EHV 0.5-350/00-A25BD-200*	D	E95 (1) 20250803648		0,6	350	- 20/+80	3	260	91	G ¾"	21,3x2,4
10845601125	EHV 1-350/00-A25BC-200*	C	E114 (1) 20251003648	CE 89 20151903620	1	350	- 20/+80	6	330	116	G ¾"	21,3x2,4
10998301125	EHV 1.6-350/90-A25BC-200	C	E114 (1) 20251003648	CE 89 20151903620	1,6	350	- 20/+80	8	442	116	G ¾"	21,3x2,4
10854701125	EHV 2.5-350/90-A25DC-200	C	E114 (2) 20251003648	CE 89 20151903620	2	350	- 20/+80	11	549	116	G 1 ¼"	36,2x3
10845401125	EHV 4-350/90-A25DC-200	C	E168 (1) 20251303648	CE108 20118703620	3,7	350	- 20/+80	15	434	170	G 1 ¼"	36,2x3
10861201125	EHV 5-350/90-A25DC-200	C	E114 (2) 20251003648	CE 89 20151903620	5	350	- 20/+80	17	898	116	G 1 ¼"	36,2x3
10857401125	EHV 6-350/90-A25DC-200	C	E168 (2) 20251303648	CE108 20118703620	6,0	350	- 20/+80	20	560	170	G 1 ¼"	36,2x3
10859701125	EHV 10-350/90-A25DC-200	C	E168 (2) 20251303648	CE108 20118703620	10	350	- 20/+80	31	825	170	G 1 ¼"	36,2x3
10837001125	EHV 10-330/90-A25GC-200	C	D226 (2) 20251503648	CE159A 20109003620	9,2	330	-20/+80	31	587	226	G2''	54x3
10867101125	EHV 12-330/90-A25GC-200	C	D226 (2) 20251503648	CE159A 20109003620	11	330	-20/+80	36	687	226	G2''	54x3
10837101125	EHV 20-330/90-A25GC-200	C	D226 (2) 20251503648	CE159A 20109003620	17,8	330	-20/+80	49	897	226	G2''	54x3
10837201125	EHV 24,5-330/90-A25GC-200	C	D226 (2) 20251503648	CE159A 20109003620	22,5	330	-20/+80	56	1032	226	G2''	54x3
10837301125	EHV 32-330/90-A25GC-200	C	D226 (2) 20251503648	CE159A 20109003620	32	330	-20/+80	81	1420	226	G2''	54x3
11076701125	EHV 50-330/90-A25GC-200	C	D226 (2) 20251503648	CE159A 20109003620	48,5	330	-20/+80	110	1936	226	G2''	54x3

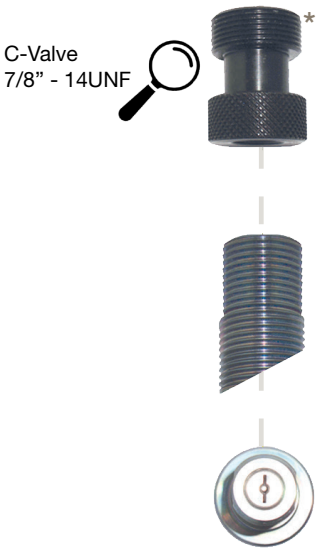

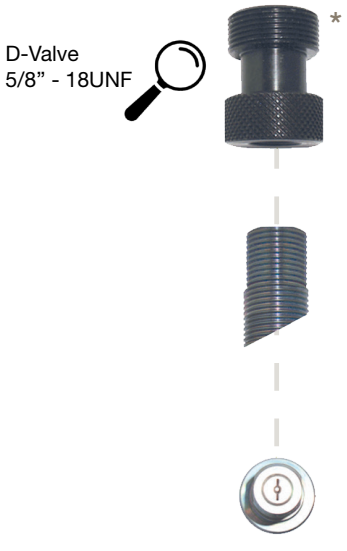

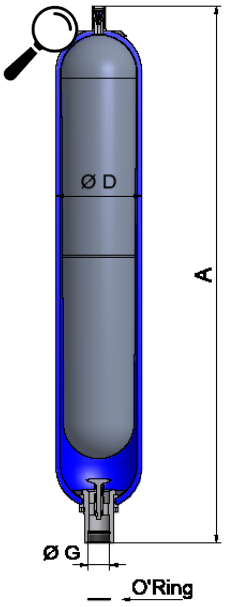

Tel: +45 63 12 83 00 | Email: ps@hymatik.com | www.hymatik.com | Hvidkaervej 27a, DK-5250 Odense SV, Denmark

Bladder Accumulator EHV Series, B gas valve

The EHV bladder accumulator is designed for high pressure hydraulic systems.
- Standard version (Carbon Steel shell/NBR mix) compatible with mineral oils.
- According to PED 2014/68/EU, EN 14359, Fluid Group 2.

A wider range of products (material, pressure, design, regulation, connection and other options) and more technical information is available on parker.com

Part number	Type	Valve	Clamps	Support Bracket	Effective Gas volume Litres	Max. Working pressure (PS) bar	Admissible Accumulator Temperature min/max (°C)	Weight kg	Dimensions in mm			Seal O-ring
			Model (quantity) Part number	Model Part number					A max Height	øD	G	
10866901125	EHV 1-350/00-A25BB-200*	B	E114 (1) 20251003648	CE 89 20151903620	1	350	- 20/+80	6	330	116	G ¾"	21,3x2,4
10866101125	EHV 4-350/90-A25DB-200	B	E168 (1) 20251303648	CE 108 20118703620	3,7	350	- 20/+80	15	434	170	G 1 ¼"	36,2x3
10865401125	EHV 10-330/90-A25GB-200	B	D226 (2) 20251503648	CE 159A 20109003620	9,2	330	-20/+80	31	587	226	G2''	54x3
10865501125	EHV 20-330/90-A25GB-200	B	D226 (2) 20251503648	CE 159A 20109003620	17,8	330	-20/+80	49	897	226	G2''	54x3
10865701125	EHV 32-330/90-A25GB-200	B	D226 (2) 20251503648	CE 159A 20109003620	32	330	-20/+80	81	1420	226	G2''	54x3
11076801125	EHV 50-330/90-A25GB-200	B	D226 (2) 20251503648	CE 159A 20109003620	48,5	330	-20/+80	110	1936	226	G2''	54x3

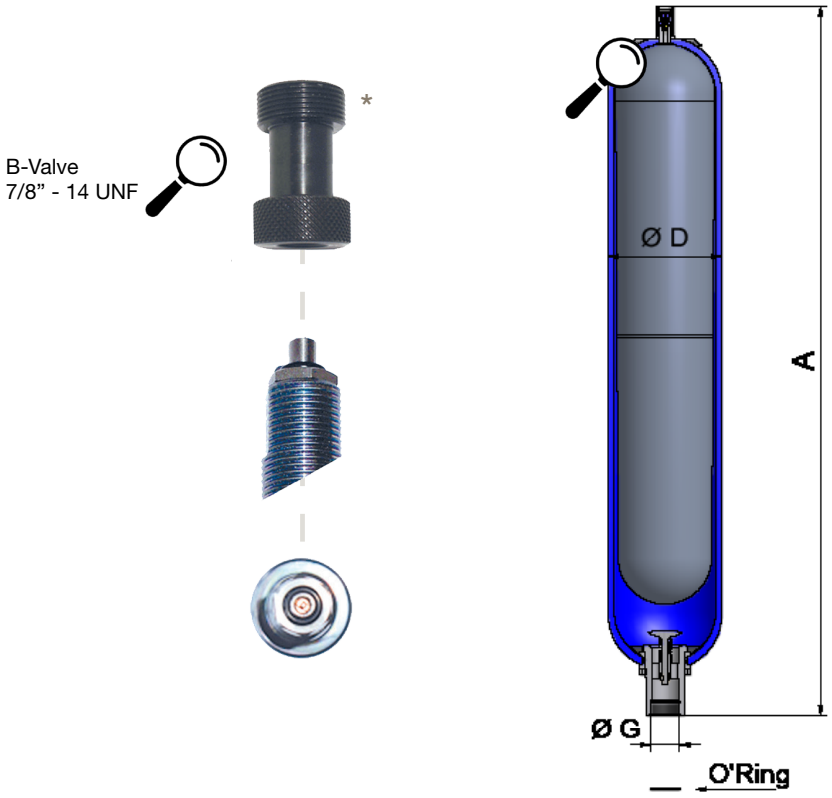

Tel: +45 63 12 83 00 | Email: ps@hymatik.com | www.hymatik.com | Hvidkaervej 27a, DK-5250 Odense SV, Denmark

Bladder Accumulator UK Series - F gas valve

- Standard version (Carbon Steel shell/NBR mix) compatible with mineral oils.
- According to PED 2014/68/EU, AD2000, Fluid Group 2
- Fluid Port Seal Arrangement - Bonded Seal Type

A wider range of products (material, pressure, design, regulation, connection and other options) and more technical information is available on parker.com

Part number	Valve	Clamps	Support Bracket	Effective Gas volume Litres	Max. Working pressure (PS) bar	Admissible Accumulator Temperature min/max (°C)	Weight kg	Dimensions in mm			Bonded Seal (BS Standard)
		Part number	Model Part number					A max Height	øD	G	
01100A-00-341	F**	10981	NA	1	345	-15°c to +80°C	5.7	292	115	G 3/4"	G 3/4"
0300A-00-341	F**	10981	NA	2.5	345	-15°c to +80°C	10	506	115	G 1"	G 1"
0400A-00-341	F	10982-DEE	10962-DEE	4	345	-15°c to +80°C	15.2	455	169	G 1 1/4"	G 1 1/4"
1000A-00-341	F	10983	10961	10	345	-15°c to +80°C	35	575	230	G 2"	G 2"
2000A-00-341	F	10983	10961	20	345	-15°c to +80°C	55	886	230	G 2"	G 2"
3700A-00-341	F	10983	10961	37	345	-15°c to +80°C	91	1407	230	G 2"	G 2"
5400A-00-341	F	10983	10961	54	345	-15°c to +80°C	130	1922	230	G 2"	G 2"

** Integrated gas valve

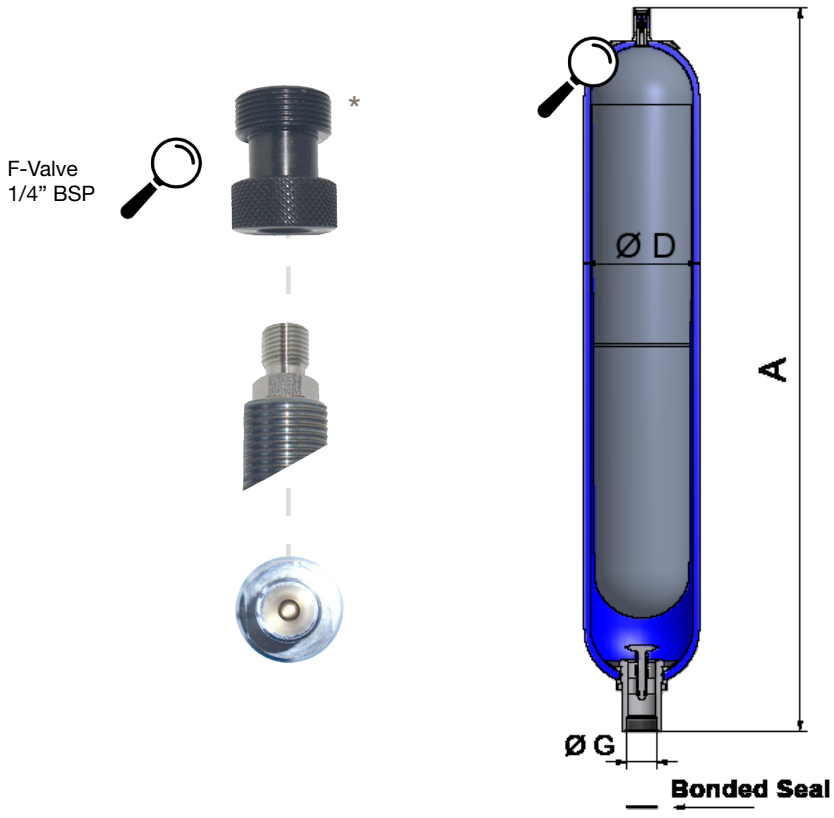





PTS MOBILE

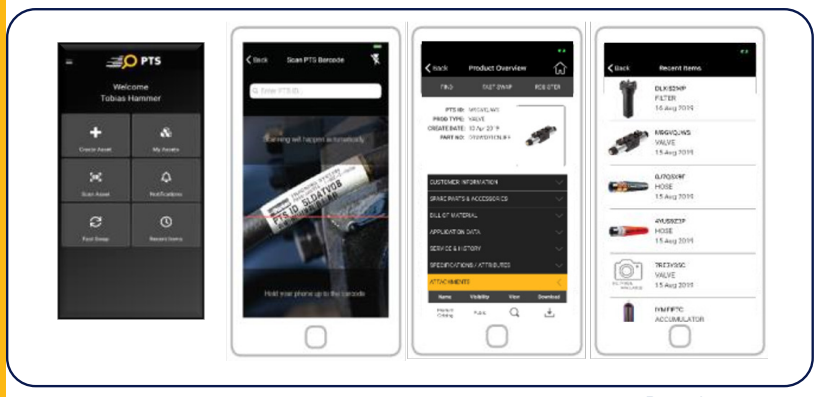

Home Page | Enter/Scan PTS | Product Details | Recent Items

Tel: +45 63 12 83 00 | Email: ps@hymatik.com | www.hymatik.com | Hvidkaervej 27a, DK-5250 Odense SV, Denmark

Spare Parts

Item	Spare parts
1	Spare parts kit
2	Valve nut
3	Gas valve assembly
3.1	Gas valve
3.2	Gas valve plug
4	Anti-extrusion ring
5	Fluid port seal
6	Back up seal ring

Item	Spare parts
7*	Spacer
8*	Locking nut
9	O-ring fluid port
10	Back up ring (depending on model)
11	Bladder

* These parts are not delivered in the spare parts kit (complete repair kit)

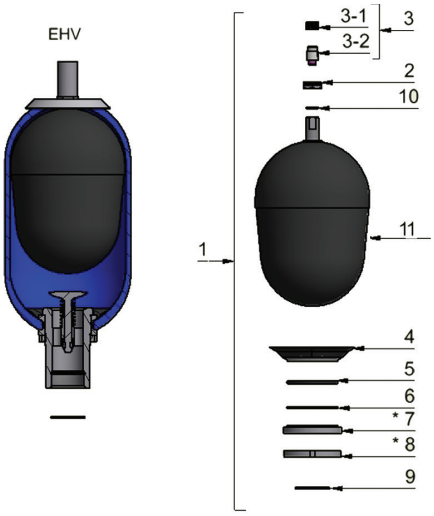

Bladder Kit

Parker Olaer offer genuine parts for the maintenance of hydraulic accumulators.

A wider range of products and more technical information is available on parker.com

Part Number	Type	Accumulator Volume	Ø Stem Valve	Gas Valve Type
19029700225	KIT EHV 1-350 DIA22 VALVE C	1 L	22 mm	C*
19029800225	KIT EHV 2.5-350 DIA22 VALVE C	2,5 L	22 mm	C*
19036600225	KIT EHV 4-350 DIA22 VALVE B	4 L	22 mm	B
19029900225	KIT EHV 4-350 DIA22 VALVE C	4 L	22 mm	C*
19030100225	KIT EHV 6-350 DIA 22 VALVE C	6 L	22 mm	C*
19030200225	KIT EHV 10-350 DIA22 VALVE C	10 L (long)	22 mm	C*
19028900225	KIT EHV 10-330 DIA22 VALVE C	10 L	22 mm	C*
19029000225	KIT EHV 20-330 DIA22 VALVE C	20 L	22 mm	C*
19036000225	KIT EHV 20-330 DIA22 VALVE B	20 L	22 mm	B
19029100225	KIT EHV 32-330 D22 VALVE C	32 L	22 mm	C*
19036100225	KIT EHV 32-330 DIA22 VALVE B	32 L	22 mm	B
19054100225	KIT EHV 50-330 DIA22 VALVE C	50 L	22 mm	C*
19040800225	KIT EHV 20-250/330 D50 VALVE A	20 L	50 mm	A
19041000225	KIT EHV 32-250/330 D50 VALVE A	32 L	50 mm	A
19029200225	KIT EHV 50-250-330 DIA50 Valve A	50 L	50 mm	A
01100A-00	BLADDER KIT 1.15L 1/4"	1 L	16 mm	F*
0300A-00	BLADDER KIT 2.5L 1/4"	2.5 L	16 mm	F*
0400A-00	BLADDER KIT 4.0 1/4"	4 L	22 mm	F
1000A-00	BLADDER KIT 10.0L 1/4"	10 L	22 mm	F
2000A-00	BLADDER KIT 20.0L 1/4"	20 L	22 mm	F
3700A-00	BLADDER KIT 37.0L 1/4"	37 L	22 mm	F
5400A-00	BLADDER KIT 54.0L 1/4"	54 L	50 mm	F

* Integrated gas valve

Tel: +45 63 12 83 00 | Email: ps@hymatik.com | www.hymatik.com | Hvidkaervej 27a, DK-5250 Odense SV, Denmark

Accumulator Set

Parker Olaer have developed an Accumulator Set which is easy to install and easy to order.
Based on standard accumulator products, according to PED2014/68/EU, EN 14359 Fluid Group 2
Temperature range -20°C to +80°C
Safety Block: Includes pressure relief valve sealed, CE marked by BV
More technical information for each product within the set is available on parker.com

Accumulator Set Part Number	Nominal Volume (V0)	Maximum Pressure (PS)	Accumulator	Clamps	Clamps Qty	Bracket	Safety block	Process connection
04323001125	2,5	350	10854701125	20251003648	1	20151903620	35128811Y02	3/4" BSP
04323101125	4	350	10845401125	20251303648	1	20118703620	35128811Y02	3/4" BSP
04323201125	6	350	10857401125	20251303648	1	20118703620	35128811Y02	3/4" BSP
04323301125	10	350	10859701125	20251303648	2	20118703620	35128811Y02	3/4" BSP
04323401125	10	330	10837001125	20251503648	1	20109003620	35128813J02	3/4" BSP
04323501125	10	330	10837001125	20251503648	1	20109003620	35129013J02	1"-1/4 SAE 6000
04323601125	20	330	10837101125	20251503648	2	20109003620	35129013J02	1"-1/4 SAE 6000
04323701125	32	330	10837301125	20251503648	2	20109003620	35129013J02	1"-1/4 SAE 6000
04323801125	50	330	11076701125	20251503648	2	20109003620	35129013J02	1"-1/4 SAE 6000

The accumulator set will be delivered in a single shipment | Accumulator pre charge at 150 Bar Nitrogen (P0) | Refer to catalogue for clamps quantity advice (additional clamps may be ordered seperately)

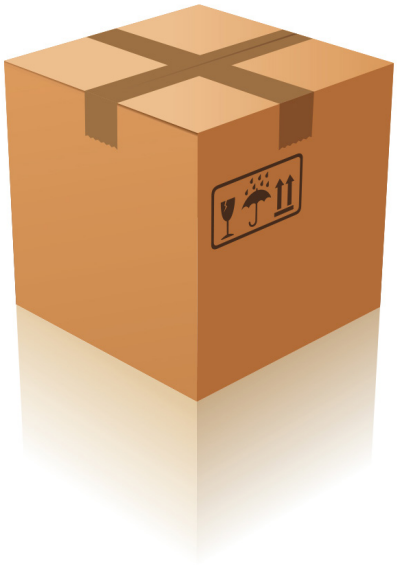

Set includes:
- **1 x Bladder Accumulator**
  (Pre-charged 150 bar)
- **Clamp(s)**
- **Bracket**
- **Safety Block**





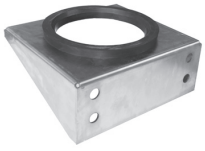



Tel: +45 63 12 83 00 | Email: ps@hymatik.com | www.hymatik.com | Hvidkaervej 27a, DK-5250 Odense SV, Denmark

Global Bladder Accumulator

The Parker Global Accumulator offers multi-international certification (SELO, ASME & CE) as well as improved technology and design.

- Certification CE 350 bar / ASME 3800 psi + GB 280 Mpa only for 32L and 50L (SELO)
- Carbon steel components / Mix 25 bladder
- Standard RAL5005 epoxy painting 30-50µm
- G2" "DA" fluidport (maximum flow rate = 1200 L/min) ; Gas valve B
- Standard RAL5005 epoxy painting 30-50µm
- No precharge
- English/German/Chinese name plate with double units (SI / USA)
- Name plate ready for PTS label (PTS label coming soon)
- Special packaging (box quantity - refer to table below)

More technical information is available on parker.com

Part Number	Description	Gas valve design	Effective Volume (Litres)	Pressure (PS)	DA fluid port connection	Box quantity
09504401125	EHV 10-350/94-A25HB-238	B	9,2	CE : 350 Bar ASME : 3800 psi (262 Bar) This volume is out of the SELO scope	DA G2"	9
09504601125	EHV 20-350/94-A25HB-238	B	17,8	CE : 350 Bar ASME : 3800 psi (262 Bar) This volume is out of the SELO scope	DA G2"	9
09504801125	EHV 32-350/AS-A25HB-238	B	32	CE : 350 Bar ASME : 3800 psi (262 Bar) SELO (according to GB/T-20663-2006) : 280 bar	DA G2"	6
09505001125	EHV 50-350/AS-A25HB-238	B	47,5	CE : 350 Bar ASME : 3800 psi (262 Bar) SELO (according to GB/T-20663-2006) : 280 bar	DA G2"	6

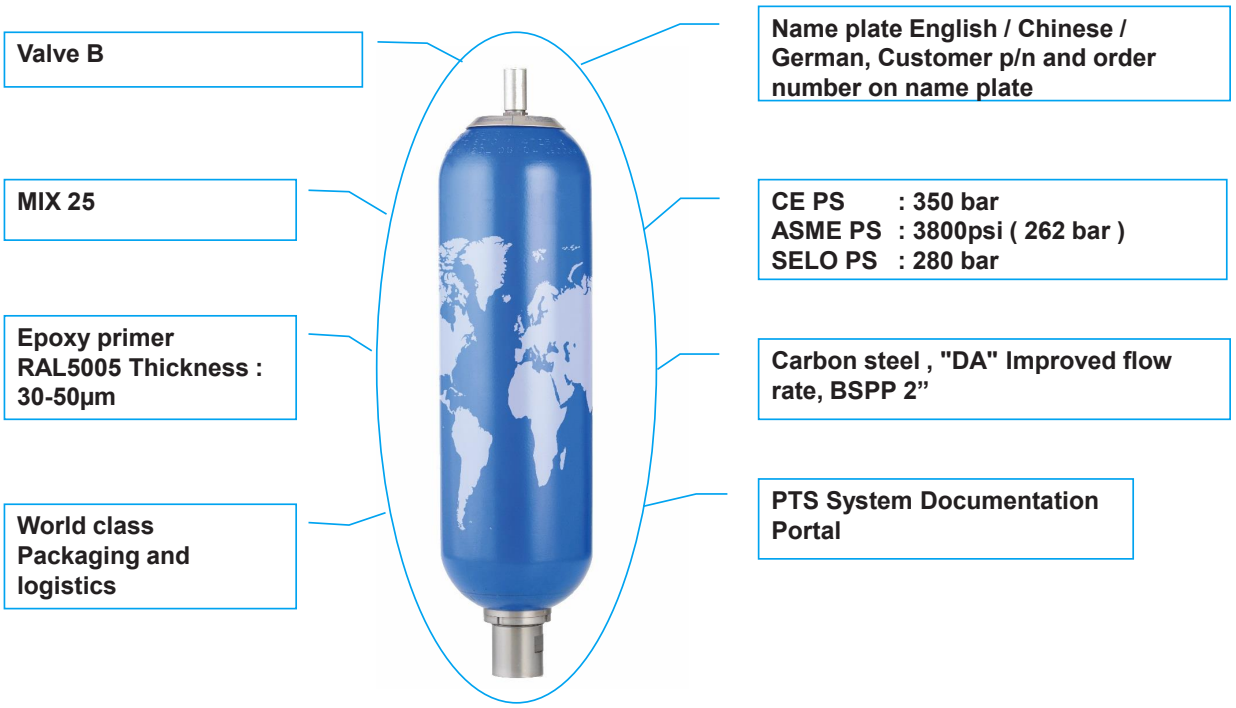

Tel: +45 63 12 83 00 | Email: ps@hymatik.com | www.hymatik.com | Hvidkaervej 27a, DK-5250 Odense SV, Denmark

Clamps

Parker Olaer Clamps are designed to allow quick and easy installation of hydraulic accumulators.
- Available in carbon and stainless steel.
- Steel with zinc plated protection, Rubber EPDM (48) or NBR (25)

A wider range of products and more technical information is available on parker.com

Part Number	Description	inlet diameter	Design
20149203625	A56	54-56	E
20250803648	E95	97-97	E
20250903648	E106	99-109	E
20251003648	E114	112-124	E
20251103648	E136	128-124	E
20251203648	E155	146-157	E
20259003648	E160	155-165	E
20251303648	E168	166-176	E
20251503648	D226	215-226	D

Design E



Design D



Brackets

Parker Olaer Brackets are designed to allow quick and easy installation of accumulators.
- Available in carbon and stainless steel
- Carbon steel zinc plated and NBR cushion ring

A wider range of products and more technical information is available on parker.com

Part Number	Description	Bladder Accumulator model
20151903620	CE89	1 to 5 liters
20118703620	CE108	4, 6 , 10 liters
20109003620	CE159A	10 to 50 liters

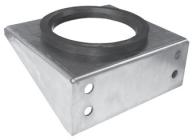

Charging Sets

The Parker Charging kit is an indispensable instrument for checking,
adjusting or filling nitrogen into most of the hydraulic accumulators available on the market.
For membrane accumulators no adaptor is required.
A wider range of products and more technical information is available on parker.com

VGU KIT



- VGU universal tester and pressuriser
- Set of accumulator adaptors
  (5/8", 7/8", 7/8" long, G1/4", 8V1)
- Pressure gauge (bar) 0 - 25 / 0 - 250
- Special nitrogen hose (length 2,5 m)
- Nitrogen connection according to country standard

Part Number	Description	Country	Pressure
20214122823	VGU/F.25/250.8.TS2.3	France	0-250
20214122833	VGU/F.25/250.8.TS3.3	Germany	0-250
20214122893	VGU/F.25/250.8.TS9.3	Netherlands	0-250

SC-VGU KIT



- VGU universal tester and pressuriser
- Set of accumulator adaptors
  7/8", 7/8" long, 5/8"UNF, 0.302"(8V1), G 1/4",
  M28x1.5, M16x200, M16x150, 3/4"BSP HEX
- Pressure gauge (bar): 0 - 6 / 0 - 25 / 0 - 250 / 0 - 400
- 1 Extender Hose for safe operation in tricky spaces
- Special nitrogen hose (length 2,5 m)
- 1 Gas Flow Limiter to control the initial pre-charge speed
- Nitrogen connection according to country standard

Part Number	Description	Country	Pressure
20270749929	SC-VGU.TM.9.TS2.9	French	0 - 400
20270749939	SC-VGU.TM.9.TS3.9	Germany	0 - 400
20270749989	SC-VGU.TM.9.TS8.9	Italy	0 - 400
20270749999	SC-VGU.TM.9.TS9.9	Netherlands	0 - 400

Tel: +45 63 12 83 00 | Email: ps@hymatik.com | www.hymatik.com | Hvidkaervej 27a, DK-5250 Odense SV, Denmark

SensoNODE Kit for Accumulators

A regular control of the nitrogen pressure allows a durable and efficient operation of the accumulator.
The new SensoNode sensor transmits nitrogen pressure / temperature information via a Bluetooth connection to a mobile device (tablet or smartphone) using Scout Mobile Parker application. The purpose of this equipment is to simplify the maintenance of the accumulators by allowing a frequent control of the nitrogen pressure while avoiding dangerous situations for the operator.

PRODUCT FEATURES

Accuracy: 1,5% of the total measuring scale
Temp range: -40°C to +85°C
Measurement cycles: > 1 million
Burst pressure: 3 x working pressure

SAFE

⇨Easy Maintenance
⇨Greater safety for operators

ECONOMIC

⇨Reduced maintenance time
⇨Free Application
⇨Sensor maintenance free

FLEXIBLE

⇨Easy installation on bladder accumulator
⇨Could equip existing or new units

RELIABLE

⇨Battery life time >1 year
⇨More efficient accumulator



Easily follow up on your product's performance via App.

Available for Android and IOS
VOICE OF THE MACHINE

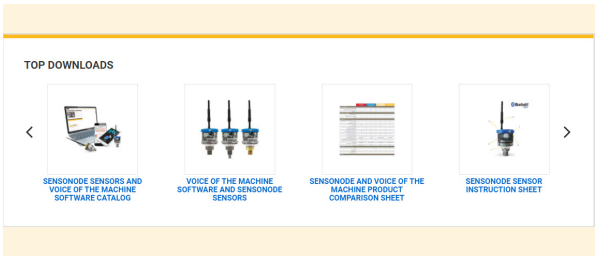

Part Number	Description	Pressur Range
11354000223	SENSONODE CHARGING SET 0-400 B	0-400 Bar

Visit our website for more useful tools and trainings about condition monitoring resources. LINK



INCLUDES

- SensoNODE
- Gas Valve and Accumulator Stem Valve Adaptor



Dimensions

Max Height: 175 mm
Ø: 45 mm + Valve 28 mm
Weight: 530 g

NEW

Safety Block SB Series

The new SB safety block for accumulator is engineered for industrial applications, protecting accumulators against pressure peaks according to PED 2014/68/EU including CE marked pressure relief valve.

- *Setted and sealed safety valve to protect against presssure peak*
- *Zinc plated for optimum corrosion resistance, conforms to* ISO 9227
- *Manual drain control or electrical drain control option*
- *Approved process for the settings of pressure relief valve*

INCL. ACCUMULATOR ADAPTOR

Part Number	Size	Pressure (Bar)	Drain Valve control	Accumulator Connection	Process Connection
SBR10TCM002350CNZ0	10	350	Manual	3/4"	G 1/2"
SBR10TCM001350CNZ0	10	350	Manual	1"-1/4	G 1/2"
SBR20TCM001350CNZ0	20	350	Manual	1"-1/4	G 1"
SBR20TCM003330CNZ0	20	330	Manual	2"	G 1"
SBR32FCM001350CNZ0	32	350	Manual	1"-1/4	1-1/4" SAE 6000
SBR32FCM003330CNZ0	32	330	Manual	2"	1-1/4" SAE 6000

size 10

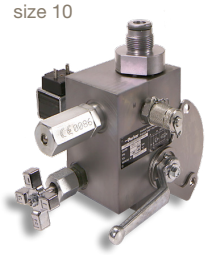

WITHOUT ACCUMULATOR ADAPTOR

Part Number	Size	Pressure (Bar)	Drain Valve control	Accumulator Connection	Process Connection
SBR10TCM000330CNZ0	10	330	Manual	Requires Adaptor	G 1/2"
SBR10TCE100330CNZ0	10	330	Electrical (24V DC)	Requires Adaptor	G 1/2"
SBR20TCM000330CNZ0	20	330	Manual	Requires Adaptor	G 1"
SBR20TCE100330CNZ0	20	330	Electrical (24V DC)	Requires Adaptor	G 1"
SBR32TCM000330CNZ0	32	330	Manual	Requires Adaptor	G 1"-1/2
SBR32TCE100330CNZ0	32	330	Electrical (24V DC)	Requires Adaptor	G 1"-1/2
SBR32FCM000330CNZ0	32	330	Manual	Requires Adaptor	1-1/4" SAE 6000
SBR32FCE100330CNZ0	32	330	Electrical (24V DC)	Requires Adaptor	1-1/4" SAE 6000

size 20

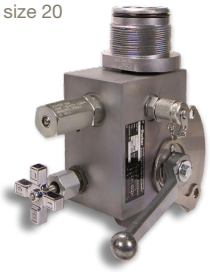

ADAPTORS

Part Number	Size	Safety block size	Sealing system
35183700223	Adaptor G 1/2"	10 & 20	Bonded seal
35183800223	Adaptor 3/4"	10 & 20	Bonded seal
35183200223	Adaptor 3/4"	10 & 20	O'Ring
35183300223	Adaptor 1"-1/4	10 & 20	O'Ring
35183400223	Adaptor 2"	10 & 20	O'Ring
35183500223	Flange Adaptor 1-1/4"	32	O'Ring
35183600223	Flange Adaptor 2"	32	O'Ring
35184400223	Flange Adaptor 2"	33	Bonded seal

size 32

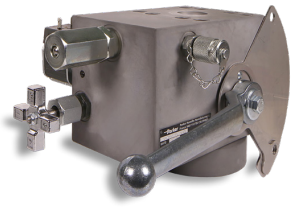

KEY FEATURES

- ✓ **Easy Designing**
- ✓ **Easy Engineering**
- ✓ **Easy Selection**
- ✓ **Easy Installation**
- ✓ **Easy Usage**
- ✓ **Easy Maintenance**

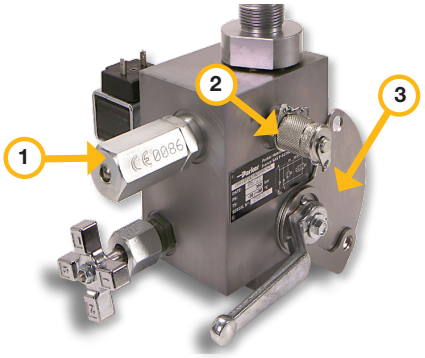

Unique Parker Features

1. Pressure Relief Valve
2. Pressure Test Point
3. Hex Head Screw



See Parker's cross reference tool on **parker.com** to find a SB replacement for all previous safety block series or competitor interchange.







VIEW CATALOGUE

Tel: +45 63 12 83 00 | Email: ps@hymatik.com | www.hymatik.com | Hvidkaervej 27a, DK-5250 Odense SV, Denmark

SAFE

· High compression ratio 8:1 · Low gas loss: 10x < than membrane accumulator
· No spontanous failure ·Sturdy design

EFFICIENT

· High flow rate - up to 4200l/min · Highly dynamic: smooth running & self-lubricating
· Dampens pulsation and pressure surges

FLEXIBLE

· Customised volume capacity · Space saving · Cost saving · Horizontal mounting option

RELIABLE

· Longevity · Proven across a wide range of applications



CRIMPED PISTON ACCUMULATORS

Part number	Effective gas Volume (Litres)	Max. Working Pressure (PS) bar	Weight (Kg)	Dimensions (mm)				
				A	C	øD	ø Bore (Nominal)	G (BSPP) Female
ACP05EA032E2KRB	0.32	275 Bar	2,2	253,2	225,8	60,5	50	1/2"
ACP05EA050E2KRB	0.5	275 Bar	2,7	340,1	312,42	60,5	50	1/2"
ACP08EA075E2KRB	0.75	275 Bar	6,3	290,1	259,3	90,4	80	1/2"
HCP10EA075E2KRD	0.75	350 Bar	10,9	239,5	208,8	120,09	100	1"
ACP10EA100E2KRB	1.0	275 Bar	11,5	263,9	233,2	120,09	100	1/2"
ACP10EA150E2KRB	1.5	275 Bar	13,2	330,7	300	120,09	100	1/2"
HCP10EA150E2KRD	1.5	350 Bar	13,2	330,7	300	120,09	100	1"
ACP10EA200E2KRB	2.0	275 Bar	14,8	391,4	360,7	120,09	100	1/2"
HCP10EA200E2KRD	2.0	350 Bar	14,8	391,4	360,7	120,09	100	1"
ACP15EA300E2KRD	3.0	275 Bar	25,9	370,6	324,1	174,6	150	1"
HCP15EA300E2KRD	3.0	350 Bar	25,9	370,6	324,1	174,6	150	1"

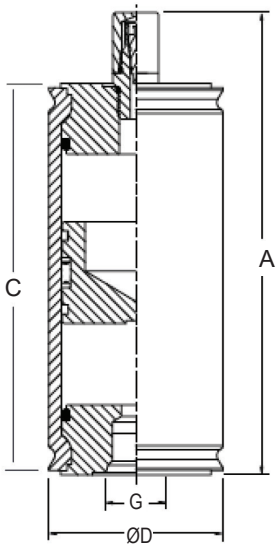

Tel: +45 63 12 83 00 | Email: ps@hymatik.com | www.hymatik.com | Hvidkaervej 27a, DK-5250 Odense SV, Denmark



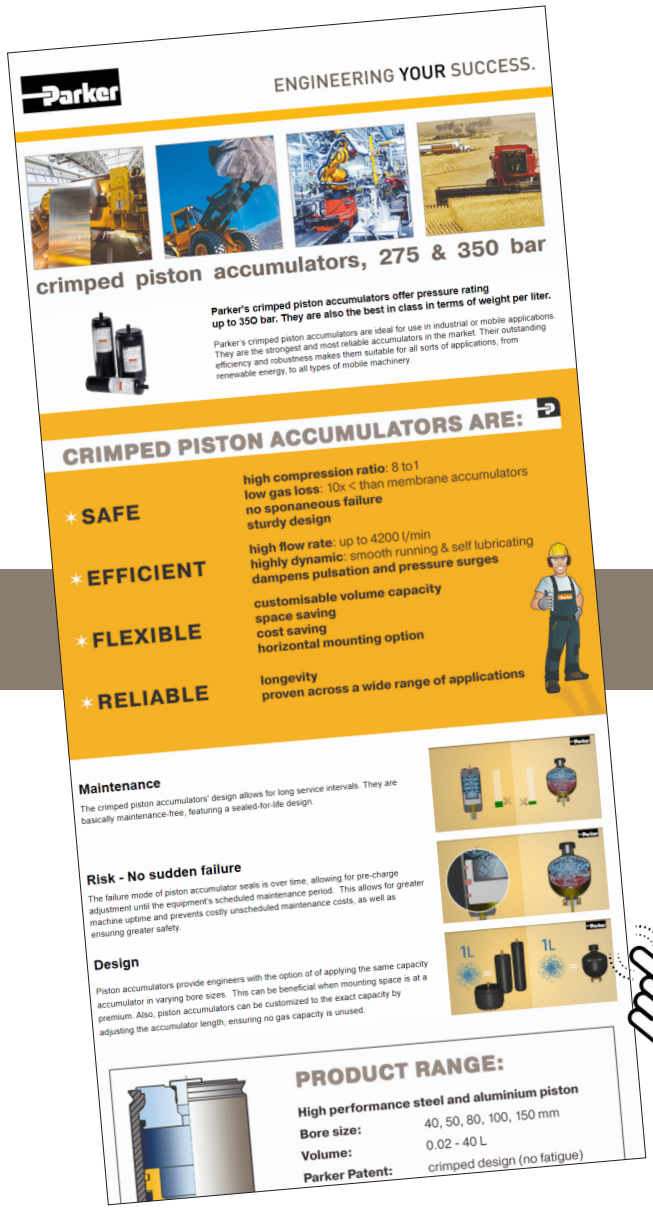

275 & 350 BAR

VIEW VIDEOS HERE

DISCOVER.PARKER.COM/CRIMPEDPISTONACCUMULATORS

NEW

NEW STANDARD PRODUCT RANGE

Piston Accumulator - EHP Series

The EHP piston accumulators are manufactured in Carbon Steel and are available in 3 different bore sizes conforming to PED 2014/68/EU and UK Safety Regulation 2016 No 1105.
Suitable for Industrial, Marine, Oil, Gas & Energy applications.



- Bore Sizes Ø: 200, 250, 350
- Pressure Rating: 250 bar or 350 bar
- Volume: upto 500 litres
- Design: EN14359 - European Standard
- Certification: According to PED 2014/68/EU with CE mark, and UK Safety Regulation 2016 No 1105 with CA mark
- Temperature: - 20 to 100°C
- Construction: Carbon steel cylinder & end caps, aluminium alloy piston
- Gas Port: 1/4“BSP Gas Valve (stainless steel)
- Gas End: Additional ports G1, G1/2, & G1/4 to ISO 1179-1 (for gas bottle and/or burst disc)
- Fluid Port: 2”SAE-6000lb flange face to ISO 6162-2 metric (SAE J518 code 62)
- Fluids: Mineral hydraulic oils (HL, HM, HV, HLP and HVLP to ISO 6743-4 / DIN 51524)
- Coating: Water based primer/cosmetic paint (RAL 9005 – black, semi-gloss)

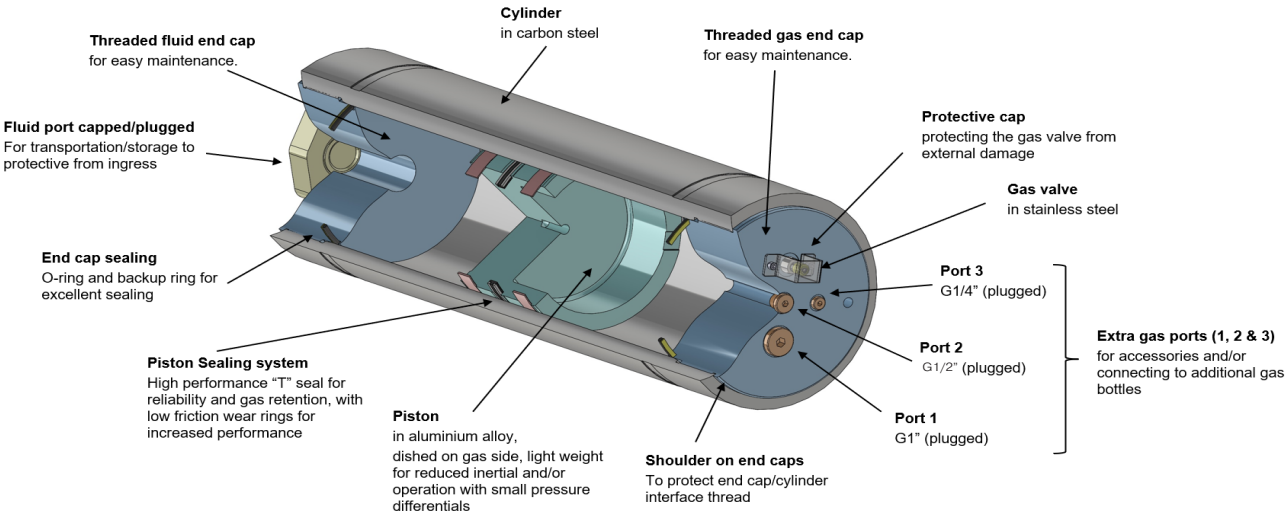

Type	Gas Valve	Clamps	Effective Gas volume Litres	Max. Working pressure (PS) bar	Admissible Accumulator Temperature min/max (°C)	Weight kg	Dimensions in mm			Seal O-ring	Gas Port Size		
		Model (quantity) Part number					A Height	ød (internal)	øD (external)		Port 1	Port 2	Port 3
EHP0500-250-200CSKCDTP	F	10983-D06 (x2)	50	250	- 20/+100	194	1883	200	230	2"-6000lb SAE	G1	G1/2	G1/4
EHP0500-350-200CSKCDTP	F	11069-1-D06 (x2)	50	350	- 20/+100	251	1883	200	240	2"-6000lb SAE	G1	G1/2	G1/4
EHP0600-250-200CSKCDTP	F	10983-D06 (x2)	60	250	- 20/+100	218	2201	200	230	2"-6000lb SAE	G1	G1/2	G1/4
EHP0600-350-200CSKCDTP	F	11069-1-D06 (x2)	60	350	- 20/+100	285	2201	200	240	2"-6000lb SAE	G1	G1/2	G1/4
EHP0800-250-200CSKCDTP	F	10983-D06 (x3)	80	250	- 20/+100	266	2838	200	230	2"-6000lb SAE	G1	G1/2	G1/4
EHP0800-350-200CSKCDTP	F	11069-1-D06 (x3)	80	350	- 20/+100	353	2838	200	240	2"-6000lb SAE	G1	G1/2	G1/4
EHP1000-250-250CSKCDTP	F	11068-D90 (x3)	100	250	- 20/+100	332	2381	250	280	2"-6000lb SAE	G1	G1/2	G1/4
EHP1000-350-250CSKCDTP	F	11110-D90 (x3)	100	350	- 20/+100	497	2381	250	300	2"-6000lb SAE	G1	G1/2	G1/4
EHP1200-250-250CSKCDTP	F	11068-D90 (x3)	120	250	- 20/+100	372	2796	250	280	2"-6000lb SAE	G1	G1/2	G1/4
EHP1200-350-250CSKCDTP	F	11110-D90 (x3)	120	350	- 20/+100	565	2796	250	300	2"-6000lb SAE	G1	G1/2	G1/4
EHP2000-250-350CSKCDTP	F	11133-D90 (x3)	200	250	- 20/+100	854	2440	350	406	2"-6000lb SAE	G1	G1/2	G1/4
EHP2000-350-350CSKCDTP	F	11135-D90 (x3)	200	350	- 20/+100	1162	2440	350	431	2"-6000lb SAE	G1	G1/2	G1/4

The complete standard range of more than 90 different part numbers is available on parker.com and PHconnect.

go to EHP range on parker.com

TARGET MARKETS

Industrial Die Casting / Plastic Injections / Presses / Steel Mills • **Power Gen** • **Oil & Gas** • **Hydro-Electric**

Tel: +45 63 12 83 00 | Email: ps@hymatik.com | www.hymatik.com | Hvidkaervej 27a, DK-5250 Odense SV, Denmark

Gas Bottles

Parker Gas Bottles store nitrogen under pressure and provide additional gas volume typically for accumulator systems. The BAWN Gas Bottles without neck are interchangeable and can easily replace an existing unit whilst also offering a cost effective solution for hydraulic systems.
Conforms to PED 2014/68/EU, EN 14359 and ASME VIII div1 App22. Fluid Group 2.

Part number	Description	Volume (L)	Pressure (bar)	Dimensions (mm)		Fluid port connection
				A	D	
83101030	BAWN 50.360-207 PED+U NO/NECK 1"1/2-3/4"GAS CIL.	50	360	1615	229	G3/4 & G1-1/2
83101040	BAWN 75.360-207 PED+U NO/NECK 1"1/2-3/4"GAS CIL.	75	360	2280	229	G3/4 & G1-1/2

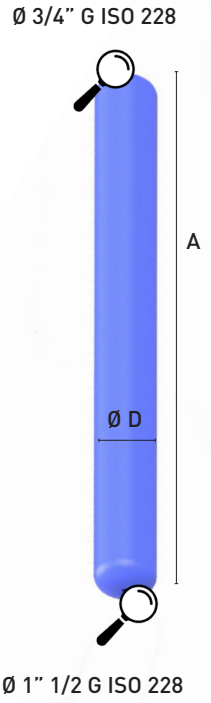

Pressure Relief Valve Block

Parker Olaer has developed a complete range of pressure relief valve blocks for all standard applications. This provides the minimal pressure protection required to protect an accumulator against excessive pressure. Pressure relief block delivered assembled; Pressure relief valve sealed delivered with EC certified by BV declaration of manufacturing conformity. A wider range of products and more technical information is available on parker.com

Part Number	Description	Size	Pressure (Bar)	Accumulator Connection
35170913502	SL 16/1/350CV	16	350	1"-1/4
35170913302	SL 16/1/330CV	16	330	1"-1/4
35170733302	SL 24/3/330CV	24	330	2"
35170732502	SL 24/3/250CV	24	250	2"
35170602502	SD 24/0/250CV	24	250	1/2"
35170603302	SD 24/0/330CV	24	330	1/2"

Image A



Image B



Tel: +45 63 12 83 00 | Email: ps@hymatik.com | www.hymatik.com | Hvidkaervej 27a, DK-5250 Odense SV, Denmark

How to size an accumulator

Accumulator Sizing Software

www.parker.com/acde

Parker Olaer has developed very sophisticated simulation software to optimise accumulator sizing recommendations.

Calculations are based on the real gas equation and real gases. The software allows for temperature and flow characteristics and has an intuitive Windows format that is easy to use!

The behaviour of accumulators used in applications such as pulsation dampening, surge arrestor, thermal expansion and energy storage can be simulated.

The latest version of the sizing software can be downloaded from our website.



Sizing Questionnaires

Customers can also complete a sizing questionnaire and send this to the local Parker Sales Office so that the most efficient accumulator can be sized for your application.

You can download the sizing questionnaires from our website or click on the links below if you are viewing a digital version of this document.

There are 4 questionnaires to select from:

1. Energy Storage
2. Thermal Expansion in a closed circuit
3. Surge Arrestor / Waterhammer
4. Pulsation Damper

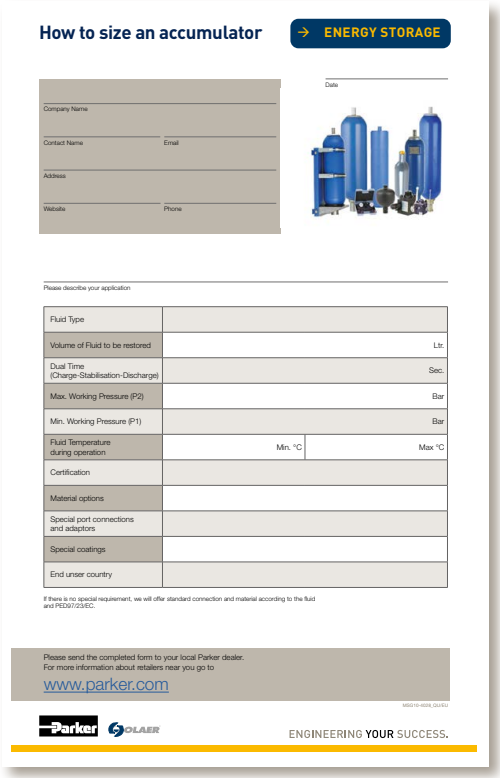

How to size an accumulator

→ ENERGY STORAGE

Company Name

Contact Name | Email

Address

Website | Phone

Date

Please describe your application

Fluid Type		
Volume of Fluid to be restored		Ltr.
Dual Time (Charge-Stabilisation-Discharge)		Sec.
Max. Working Pressure (P2)		Bar
Min. Working Pressure (P1)		Bar
Fluid Temperature during operation	Min. °C	Max °C
Certification		
Material options		
Special port connections and adaptors		
Special coatings		
End unser country		

If there is no special requirement, we will offer standard connection and material according to the fluid and PED97/23/EC.

Please send the completed form to your local Parker dealer.
For more information about retailers near you go to
www.parker.com

Parker OLAER ENGINEERING YOUR SUCCESS.

DOWNLOAD
sizing software

Air Oil Cooler with AC Motor, LAC Series

Suitable for most Industrial applications,
the LAC air oil cooler series offers an efficient and robust design and is available in a range of cooling capacities from 1kW to 300 kW.



PRODUCT BENEFITS

- ⇨ For industrial applications
- ⇨ Cooling capacity up to 300 kW
- ⇨ Robust construction
- ⇨ Low service and maintenance
- ⇨ Wide variety of specifications

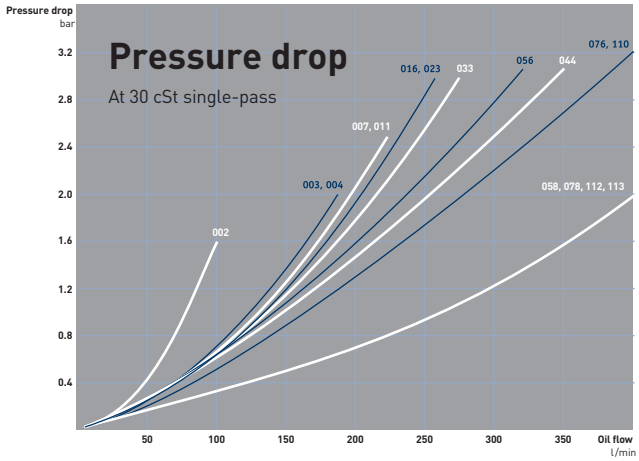

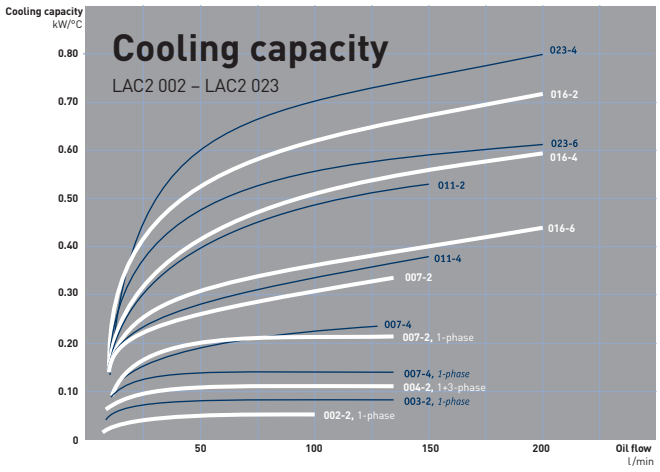

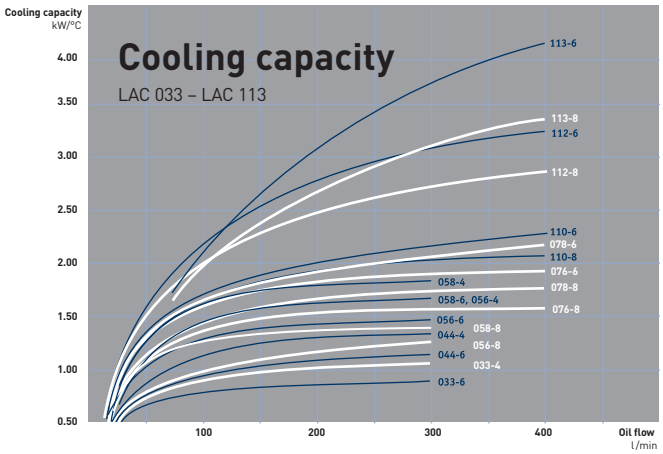

Cooling capacity tolerance ± 10% kW.

Tel: +45 63 12 83 00 | Email: ps@hymatik.com | www.hymatik.com | Hvidkaervej 27a, DK-5250 Odense SV, Denmark

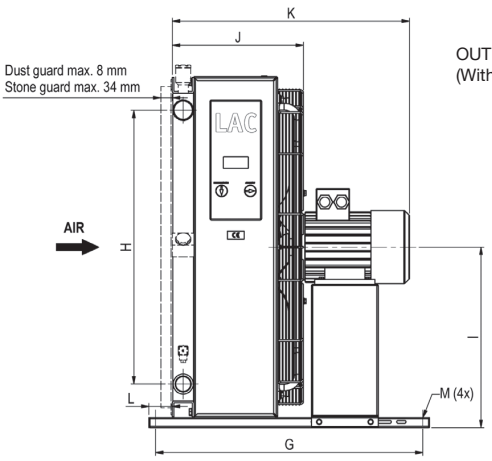

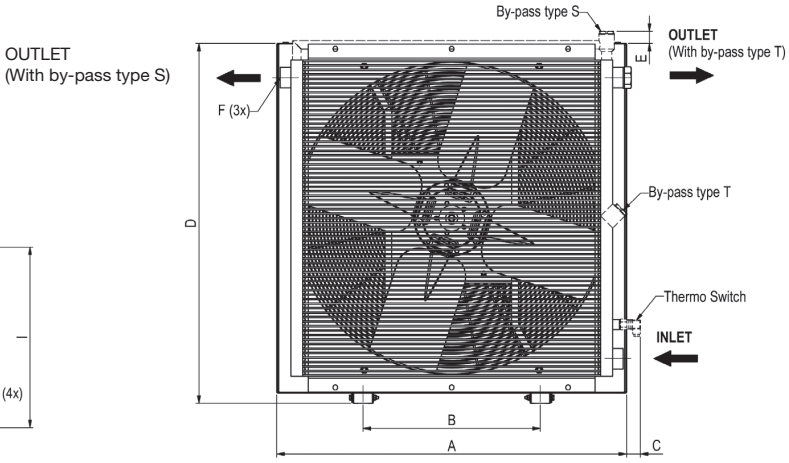

Part number	TYPE	Dimensions (mm)												
		A	B	C	D	E	F	G	H	I	J	K	L	Mø
LAC2-0042DB00000000S0JB0	LAC2-004-2-D-00-000-0-0	267	134	82	256	69	G1	148	90	131	165	222	28	9x14
LAC2-0042DB50000000S0JB0	LAC2-004-2-D-50-000-0-0	267	134	82	256	69	G1	148	90	131	165	222	28	9x14
LAC2-0074DC00000000S0JB0	LAC2-007-4-D-00-000-0-0	365	203	64	395	42	G1	510	160	213	225	429	50	9
LAC2-0074DC50000000S0JB0	LAC2-007-4-D-50-000-0-0	365	203	64	395	42	G1	510	160	213	225	429	50	9
LAC2-0074DC00S50200S0JB0	LAC2-007-4-D-00-S50-0-0	365	203	64	395	42	G1	510	160	213	225	429	50	9
LAC2-0074DC50S50200S0JB0	LAC2-007-4-D-50-S50-0-0	365	203	64	395	42	G1	510	160	213	225	429	50	9
LAC2-0114DC00000000S0JB0	LAC2-011-4-D-00-000-0-0	440	203	62	470	41	G1	510	230	250	249	453	50	9
LAC2-0114DC50000000S0JB0	LAC2-011-4-D-50-000-0-0	440	203	62	470	41	G1	510	230	250	249	453	50	9
LAC2-0114DC00S50200S0JB0	LAC2-011-4-D-00-S50-0-0	440	203	62	470	41	G1	510	230	250	249	453	50	9
LAC2-0114DC50S50200S0JB0	LAC2-011-4-D-50-S50-0-0	440	203	62	470	41	G1	510	230	250	249	453	50	9
LAC2-0164DC00000000S0JB0	LAC2-016-4-D-00-000-0-0	496	203	66	526	46	G1	510	230	278	272	479	50	9
LAC2-0164DC50000000S0JB0	LAC2-016-4-D-50-000-0-0	496	203	66	526	46	G1	510	230	278	272	479	50	9
LAC2-0164DC00S50200S0JB0	LAC2-016-4-D-00-S50-0-0	496	203	66	526	46	G1	510	230	278	272	479	50	9
LAC2-0164DC50S50200S0JB0	LAC2-016-4-D-50-S50-0-0	496	203	66	526	46	G1	510	230	278	272	479	50	9
LAC2-0234AC00000000S0JB0	LAC2-023-4-D-00-000-0-0	580	356	63	610	44	G1	510	305	320	287	511	50	9
LAC2-0234AC50000000S0JB0	LAC2-023-4-D-50-000-0-0	580	356	63	610	44	G1	510	305	320	287	511	50	9
LAC2-0234AC00S50200S0JB0	LAC2-023-4-D-00-S50-0-0	580	356	63	610	44	G1	510	305	320	287	511	50	9
LAC2-0234AC50S50200S0JB0	LAC2-023-4-D-50-S50-0-0	580	356	63	610	44	G1	510	305	320	287	511	50	9
LAC-0334AC00000000S0JB0	LAC-033-4-A-00-000-0-0	692	356	53	722	42	G1¼	510	406	376	318	618	50	9
LAC-0334AC50000000S0JB0	LAC-033-4-A-50-000-0-0	692	356	53	722	42	G1¼	510	406	376	318	618	50	9
LAC-0334AC00S50200S0JB0	LAC-033-4-A-00-S50-0-0	692	356	53	722	42	G1¼	510	406	376	318	618	50	9
LAC-0334AC50S50200S0JB0	LAC-033-4-A-50-S50-0-0	692	356	53	722	42	G1¼	510	406	376	318	618	50	9
LAC-0444AC00000000S0JB0	LAC-044-4-A-00-000-0-0	692	356	53	866	59	G1¼	510	584	448	343	643	50	9
LAC-0444AC50000000S0JB0	LAC-044-4-A-50-000-0-0	692	356	53	866	59	G1¼	510	584	448	343	643	50	9
LAC-0444AC00S50200S0JB0	LAC-044-4-A-00-S50-0-0	692	356	53	866	59	G1¼	510	584	448	343	643	50	9
LAC-0444AC50S50200S0JB0	LAC-044-4-A-50-S50-0-0	692	356	53	866	59	G1¼	510	584	448	343	643	50	9
LAC-0584AC00000000S0JB0	LAC-058-4-A-00-000-0-0	868	508	49	898	43	G2	510	584	464	388	688	30	9
LAC-0584AC50000000S0JB0	LAC-058-4-A-50-000-0-0	868	508	49	898	43	G2	510	584	464	388	688	30	9
LAC-0584AC00S50200S0JB0	LAC-058-4-A-00-S50-0-0	868	508	49	898	43	G2	510	584	464	388	688	30	9
LAC-0584AC50S50200S0JB0	LAC-058-4-A-50-S50-0-0	868	508	49	898	43	G2	510	584	464	388	688	30	9

Air Oil Cooler with DC Motor - LDC Series

The LDC air oil cooler series with 12 or 24V DC motor is optimized for use in the mobile industry and is available in a range of cooling capacities from 1kW to 30 kW.



PRODUCT BENEFITS

- ⇨ For mobile applications
- ⇨ Cooling capacity up to 30 kW
- ⇨ Robust construction
- ⇨ Low service and maintenance
- ⇨ Wide variety of specifications

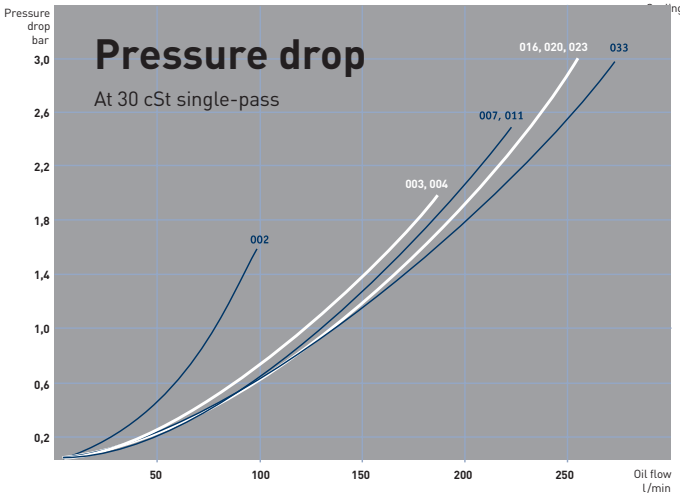

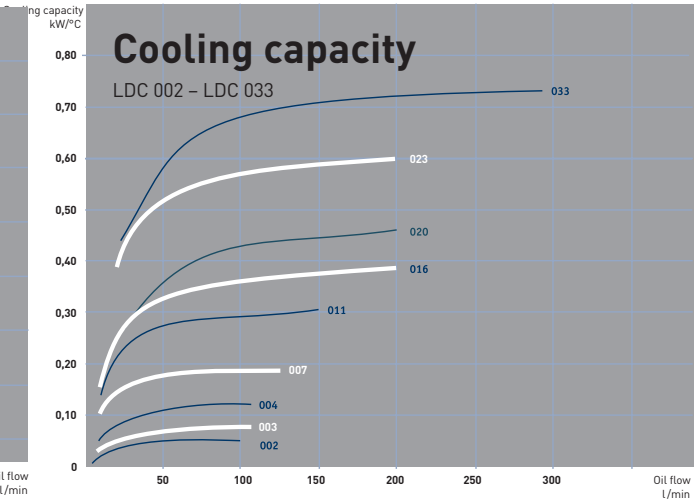

Tel: +45 63 12 83 00 | Email: ps@hymatik.com | www.hymatik.com | Hvidkaervej 27a, DK-5250 Odense SV, Denmark

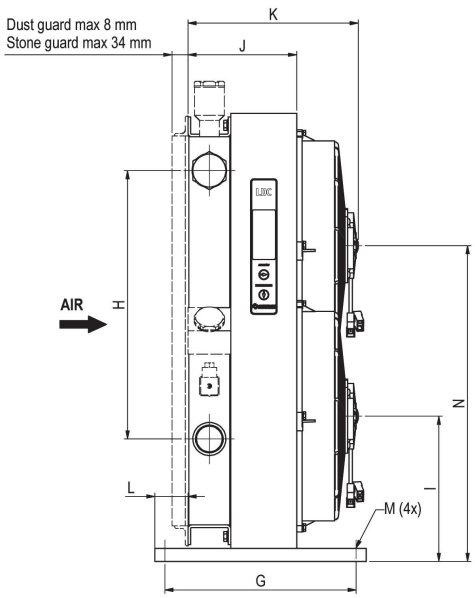

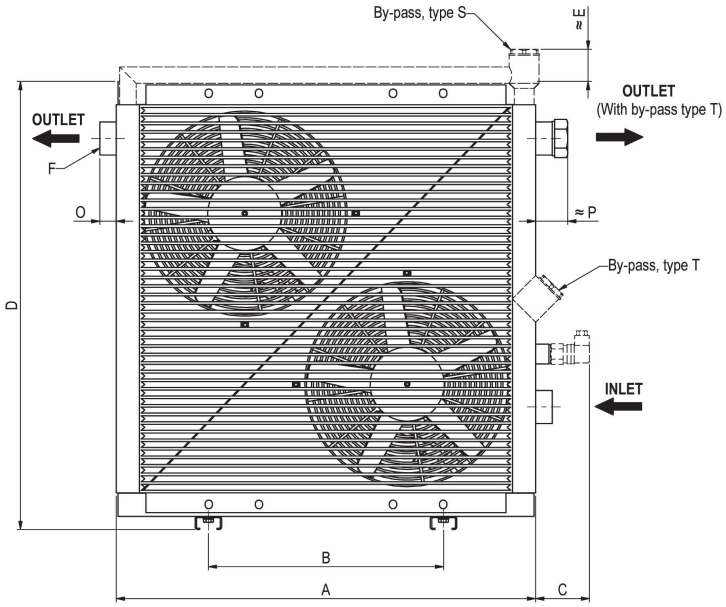

Part number	TYPE	Dimensions (mm)																Weight kg (approx)	LpA dB(A) 1m*
		A	B	C	D	E	F	G	H	I	J	K	L	Mø	N	O	P		
5837007007	LDC-007-B-0-00-000-0-0	330	203	82	345	54	G1	267	160	175	115	178	59	9	-	23	44	9	71
5837007002	LDC-007-B-0-50-000-0-0	330	203	82	345	54	G1	267	160	175	115	178	59	9	-	23	44	9	71
5837007034	LDC-007-B-0-00-S50-0-0	330	203	82	345	54	G1	267	160	175	115	178	59	9	-	23	44	9	71
5837007060	LDC-007-B-0-50-S50-0-0	330	203	82	345	54	G1	267	160	175	115	178	59	9	-	23	44	9	71
5827011025	LDC-011-B-0-00-000-0-0	400	360	82	396	65	G1	101	230	200	125	218	-	9x29	-	23	44	12	74
5827011002	LDC-011-B-0-50-000-0-0	400	360	82	396	65	G1	101	230	200	125	218	-	9x29	-	23	44	12	74
5827011020	LDC-011-B-0-00-S50-0-0	400	360	82	396	65	G1	101	230	200	125	218	-	9x29	-	23	44	12	74
5827011017	LDC-011-B-0-50-S50-0-0	400	360	82	396	65	G1	101	230	200	125	218	-	9x29	-	23	44	12	74
5827016012	LDC-016-B-0-00-000-0-0	464	416	82	466	63	G1	101	300	235	125	218	-	9x29	-	23	44	15	74
5827016002	LDC-016-B-0-50-000-0-0	464	416	82	466	63	G1	101	300	235	125	218	-	9x29	-	23	44	15	74
5827016023	LDC-016-B-0-00-S50-0-0	464	416	82	466	63	G1	101	300	235	125	218	-	9x29	-	23	44	15	74
5827016022	LDC-016-B-0-50-S50-0-0	464	416	82	466	63	G1	101	300	235	125	218	-	9x29	-	23	44	15	74
5827023012	LDC-023-B-0-00-000-0-0	615	356	46	635	26	G1	290	305	200	125	218	50	13	455	-	8	25	77
5827023002	LDC-023-B-0-50-000-0-0	615	356	46	635	26	G1	290	305	200	125	218	50	13	455	-	8	25	77
5827023004	LDC-023-B-0-00-S50-0-0	615	356	46	635	26	G1	290	305	200	125	218	50	13	455	-	8	25	77
5827023015	LDC-023-B-0-50-S50-0-0	615	356	46	635	26	G1	290	305	200	125	218	50	13	455	-	8	25	77
5827033008	LDC-033-B-0-00-000-0-0	635	356	82	678	59	G1¼	290	406	220	165	258	50	13	478	25	49	30	77
5827033002	LDC-033-B-0-50-000-0-0	635	356	82	678	59	G1¼	290	406	220	165	258	50	13	478	25	49	30	77
5827033011	LDC-033-B-0-00-S50-0-0	635	356	82	678	59	G1¼	290	406	220	165	258	50	13	478	25	49	30	77
5827033004	LDC-033-B-0-50-S50-0-0	635	356	82	678	59	G1¼	290	406	220	165	258	50	13	478	25	49	30	77

* = Noise level tolerance ± 3 dB(A)

Tolerance Cooling Capacity ± 10% kW.

Tel: +45 63 12 83 00 | Email: ps@hymatik.com | www.hymatik.com | Hvidkaervej 27a, DK-5250 Odense SV, Denmark

Air Oil Cooler with AC Motor & Pump - LOC Series

LOC cooler works as a closed cooling loop. The LOC Air Oil Cooling System with AC-motor and pump provides cooling up to 45kW. Its robust construction makes it suitable for most applications and environments.



PRODUCT BENEFITS

- ⇨ Suitable for most applications
- ⇨ Cooling capacity up to 45 kW
- ⇨ Robust construction
- ⇨ Low service and maintenance
- ⇨ Wide variety of specifications

TYPE	Nom. oil flow l/min	Cooling capacity kW at EDT 40 °C	Cooling capacity kW/°C	Acoustic pressure level LpA dB(A) 1m*	No. of poles/ Capacity kW	Weight kg (approx)
LOC3 007 - 4 - D - A	20	5.6	0.14	64	4-0.75	30
LOC3 007 - 4 - D - B	40	7.2	0.18	64	4-.075	30
LOC3 011 - 4 - D - A	20	9.2	0.23	70	4-0.75	34
LOC3 011 - 4 - D - B	40	10.4	0.26	70	4-0.75	34
LOC3 016 - 4 - D - A	20	11.2	0.28	74	4-1.50	45
LOC3 016 - 4 - D - B	40	15.6	0.39	74	4-1.50	45
LOC3 016 - 4 - D - C	60	18.0	0.45	74	4-1.50	45
LOC3 016 - 4 - D - D	80	19.6	0.49	74	4-1.50	45
LOC3 023 - 4 - D - B	40	21.2	0.53	77	4-1.50	53
LOC3 023 - 4 - D - C	60	24.4	0.61	77	4-2.20	62
LOC3 023 - 4 - D - D	80	26.8	0.67	77	4-2.20	62
LOC3 033 - 4 - A - B	40	28.8	0.72	85	4-3.00	76
LOC3 033 - 4 - A - C	60	32.0	0.80	85	4-3.00	76
LOC3 033 - 4 - A - D	80	34.8	0.87	85	4-3.00	76

*Electric motors specified are calculated for max. working pressure 6 bar at 125 cSt and 50 Hz, 4 bar at 125 cSt and 60 Hz.
If you require higher pressure, please contact us for a choice of motors with a higher output. **Noise level tolerance ± 3 dB(A).

Tel: +45 63 12 83 00 | Email: ps@hymatik.com | www.hymatik.com | Hvidkaervej 27a, DK-5250 Odense SV, Denmark

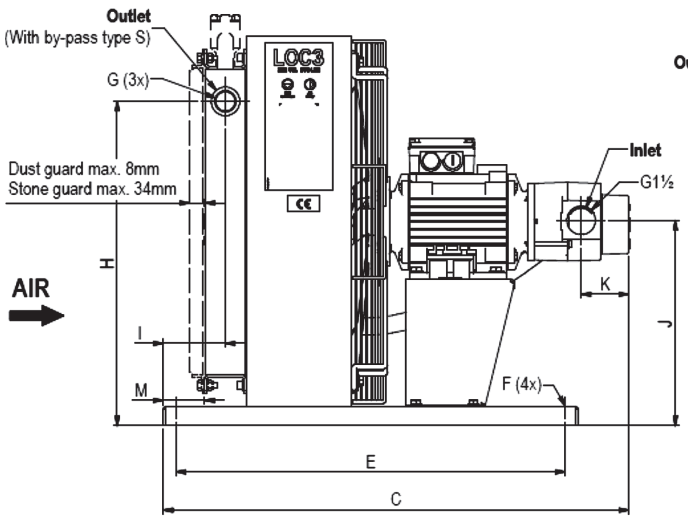

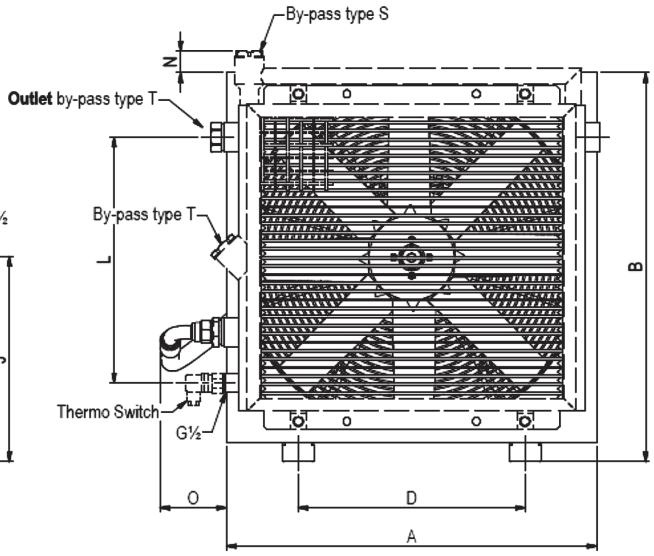

All dimensions are reference.
The design specification take presence at all time.

Part number	TYPE	Dimensions (mm)														
		A	B	C	D	E	F	G	H	I	J	K	L	M	N	O
5849007001	LOC3-007-4-D-A-0-00-000-0-00-0	365	395	602	203	510	Ø9	G1	292	83	214	62	80	50	45	105
5849007201	LOC3-007-4-D-B-0-00-000-0-00-0	365	395	615	203	510	Ø9	G1	292	83	214	74	80	50	45	105
5849011001	LOC3-011-4-D-A-0-00-000-0-00-0	440	470	626	203	510	Ø9	G1	366	83	252	62	175	50	41	103
5849011201	LOC3-011-4-D-B-0-00-000-0-00-0	440	470	639	203	510	Ø9	G1	366	83	252	74	175	50	41	103
5849016201	LOC3-016-4-D-B-0-00-000-0-00-0	365	395	680	203	510	Ø9	G1	292	83	214	100	80	50	45	105
5849016401	LOC3-016-4-D-C-0-00-000-0-00-0	496	526	712	203	510	Ø9	G1	427	83	280	87	300	50	46	107
5849016601	LOC3-016-4-D-D-0-00-000-0-00-0	496	526	725	203	510	Ø9	G1	427	83	280	100	300	50	46	107
5849023001	LOC3-023-4-D-B-0-00-000-0-00-0	580	610	729	356	610	Ø14	G1	509	98	322	74	385	65	44	104
5849023201	LOC3-023-4-D-C-0-00-000-0-00-0	580	610	770	356	610	Ø14	G1	509	98	322	87	385	65	44	104
5849023401	LOC3-023-4-D-D-0-00-000-0-00-0	580	610	783	356	610	Ø14	G1	509	98	322	100	385	65	44	104
5849033006	LOC3-033-4-A-B-0-00-000-0-00-0	692	722	785	356	610	Ø14	G1 1/4	619	103	378	74	326	70	38	99
5849033001	LOC3-033-4-A-C-0-00-000-0-00-0	692	722	798	356	610	Ø14	G1 1/4	619	103	378	87	326	70	38	99
5849033201	LOC3-033-4-A-D-0-00-000-0-00-0	692	722	810	356	610	Ø14	G1 1/4	619	103	378	100	326	70	38	99

NEW

QDC 24 V DC Series

The Parker QDC air water-glycol cooler series offers a unique cooling solution for the electrified, mobile market. Among the series' most outstanding features are:

- High power density:
  The QDC offer 2-3x higher power density than the LDC series.
- High efficiency:
  Integrated inverter controls the rotation speed with a standard PWM signal to reduce the power consumption to the minimum required RPM to dissipate the power out of the fluid.
- High noise reduction:
  The highly efficient design of the Parker heat exchanger turbulator together with the rotation speed control ensures quiet operation, suitable for operation even in noise emission reduced areas.
- This series can be fitted optionally with an IQAN controller, smart 24 VDC water-glycol pump, and a tank system. The maximum cooling capacity is 26 kW at 40°C, difference in temperature between ambient and cooler inlet, size 017
- The 24 VDC series features the same dimensions as the LDC series, yet offers improved matrixoptions. The brushless FAN drive comes with an integrated inverter for ideal efficiency.



Part number	Type	Total dimension (H x L x W)	Weight kg	LpA dB(A) 1m*
5827011186	QDC 007	345 x 335 x 208.5 mm	9	86
5847008001	QDC 008	345 x 335 x 238.5 mm	11.7	86
5827011182	QDC 011	396 x 400 x 210 mm	12	86
5827011182	QDC 011	396 x 400 x 210 mm	12	86
5847012001	QDC 012	396 x 400 x 240 mm	14.3	86
5827011185	QDC 016	464 x 466 x 210 mm	15	86
5847017001	QDC 017	464 x 466 x 240 mm	19.8	86

* = at 4750 RPM / Noise level tolerance ± 3 dB(A)

Sizes larger than QDC 017 are available on request.



go to catalogue on parker.com

OUR TECHNOLOGY

- **20-30% more efficient cooling matrix**
- **low noise fan and fan housing**
- **high performance fan drive with integrated inverter**
- **fan speed control from 1200 RPM to 4750 RPM**
- **air free fluid**

YOUR VALUE

- **50-60% less space and power consumption**
- **silent operation**
- **compact design - low space claim**

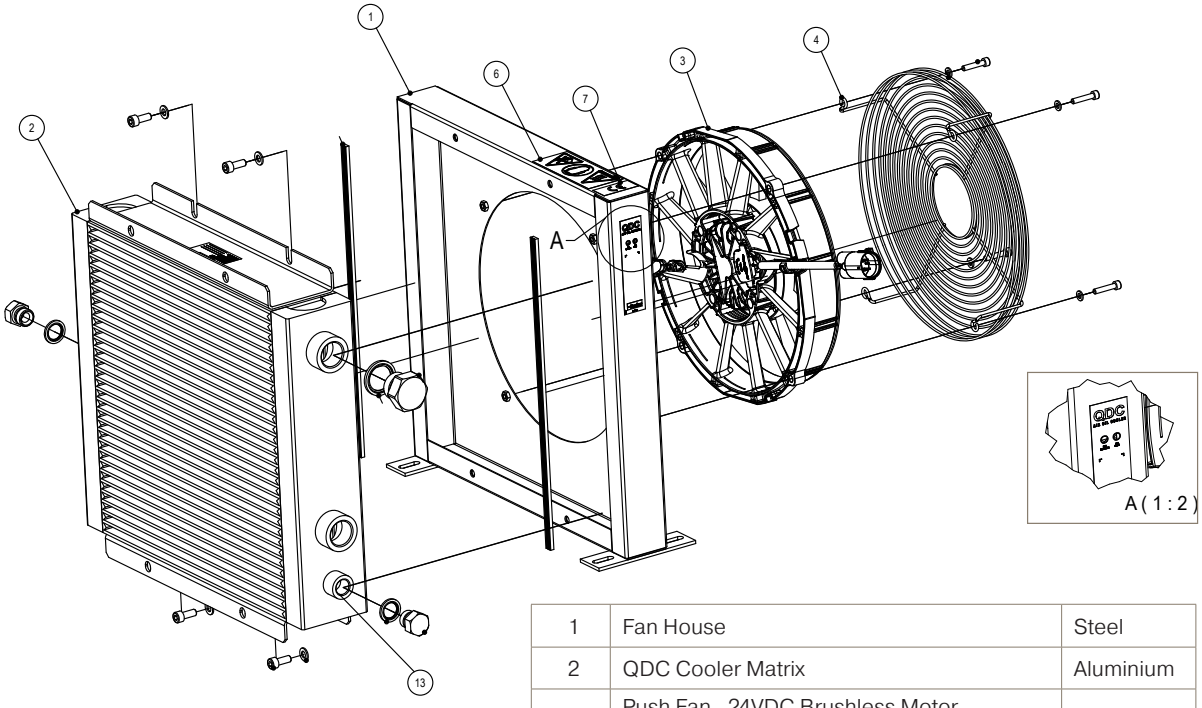

1	Fan House	Steel
2	QDC Cooler Matrix	Aluminium
3	Push Fan , 24VDC Brushless Motor with integrated Inverter	Steel
4	Finger Guard Brushless Ø305 mm	Steel
6	Label Kit	Plastic
7	Label CE 50 x 24 mm	Plastic
13	Additional fluid port on both sides	

QDC 007 to QDC 017 - Pressure Drop

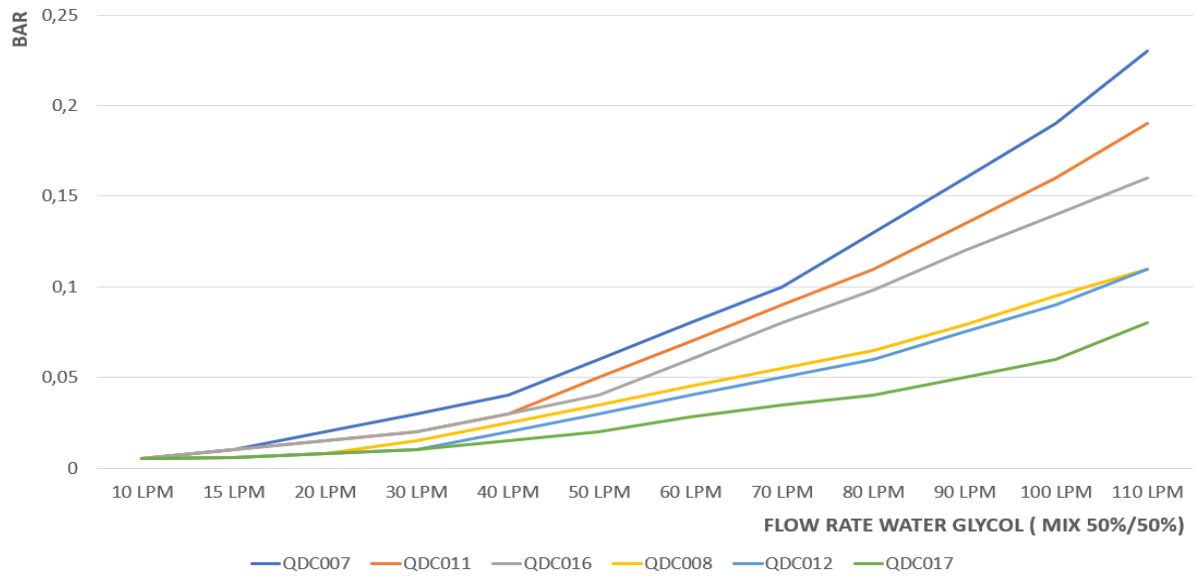

QDC 007 to QDC 017 - Cooling Capacity Water Glycol Mix 50% / 50%

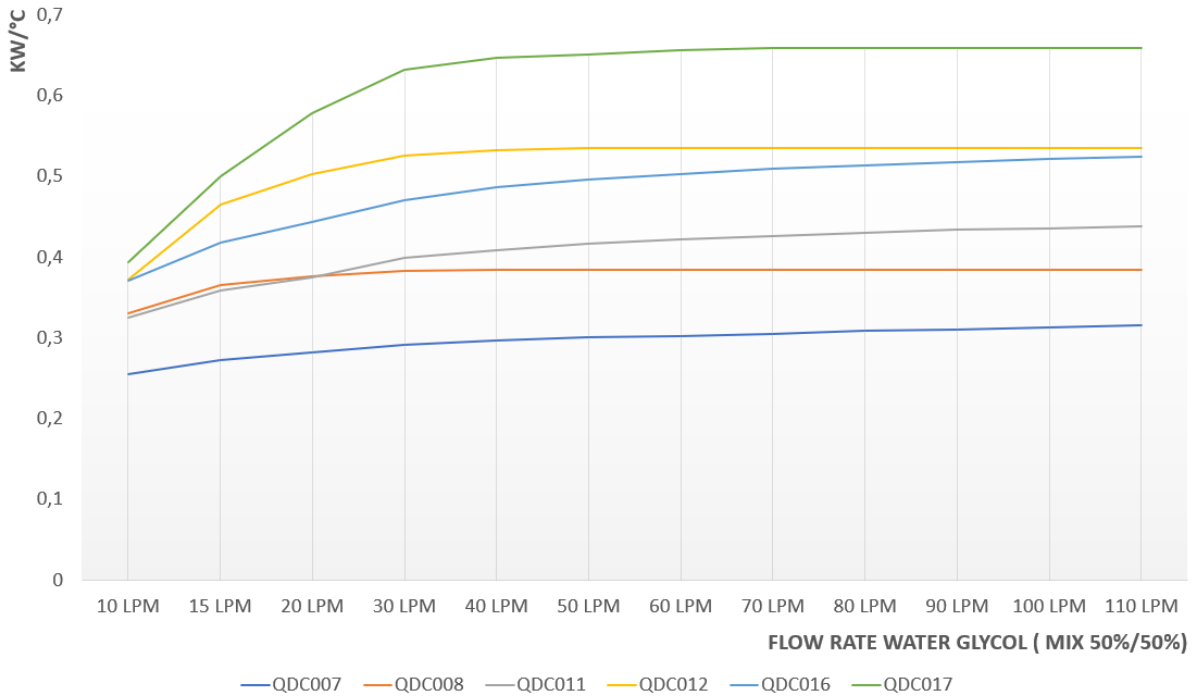

Cooler technology comparison at 44 kW cooling capacity

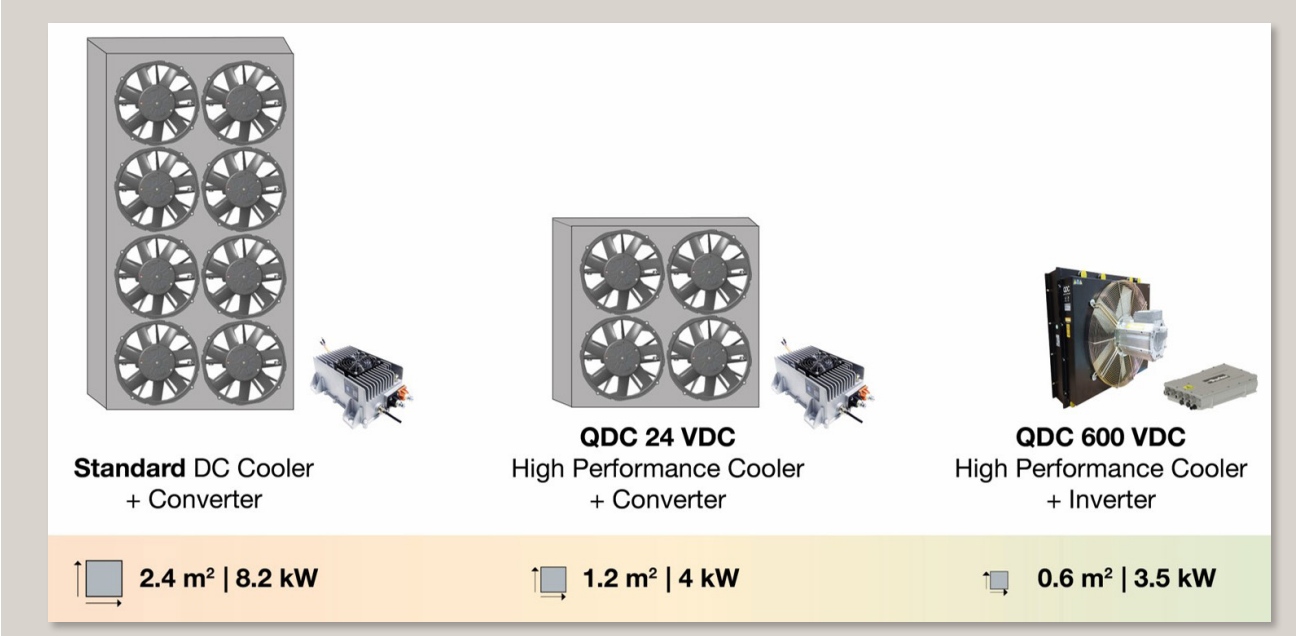

QDC 24 VDC performance overview

High Power 24VDC Brushless Fan Drive eMotor | Integrated Inverter | Push Fan Air Flow Technology
Option: RPM Control with IQAN | 1-3 Cooling Circle in a Single Matrix on Request

24 VDC High Power Single Matrix	@ Delta T 25°C*	@ Delta T 40°C*
QDC 007	7.8 kW	15.6 kW
QDC 008	9.6 kW	19.2 kW
QDC 011	10.5 kW	21 kW
QDC 012	13.4 kW	26.8 kW
QDC 016	12.7 kW	24.4 kW
QDC 017	16.4 kW	32.8 kW

QDC 600 V performance overview * available on request *

High Power 600VDC Brushless Fan Drive eMotor Air Cooled | Pull or Push Fan Air Flow Technology
HIGH Power Density | Option: GVI Inverter optimized for the QDC Range | 1-5 Cooling Circle in a Single Matrix
Voltage Range on Request 96-650VDC

600 VDC High Power Single Matrix	@ Delta T 25°C*	@ Delta T 40°C*
QDC 025	50 kW	80 kW
QDC 050	100 kW	160 kW
QDC 075	150 kW	240 kW
QDC 100	210 kW	340 kW

Tel: +45 63 12 83 00 | Email: ps@hymatik.com | www.hymatik.com | Hvidkaervej 27a, DK-5250 Odense SV, Denmark

Quiet Air Oil Cooler, QAC Series

The Quiet Air Oil Cooler (QAC) series is engineered for industrial applications, providing cooling capacity up to 160 kW and offers the lowest noise levels available on the market. This new air cooler range has an improved design which is optimized to significantly reduce noise levels making it more suitable for installation close to operatives and could help noise level regulations be met.



PRODUCT BENEFITS

- ⇨ Low noise (65 - 82 dB(A))
- ⇨ Cooling capacity up to 4.25 kW/°C
- ⇨ Robust construction
- ⇨ Low service and maintenance
- ⇨ Wide variety of specifications

Pressure Drop

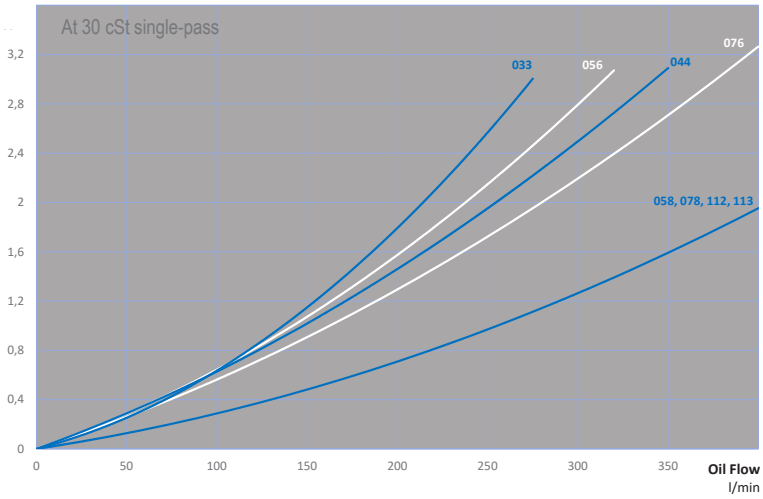

Cooling Capacity

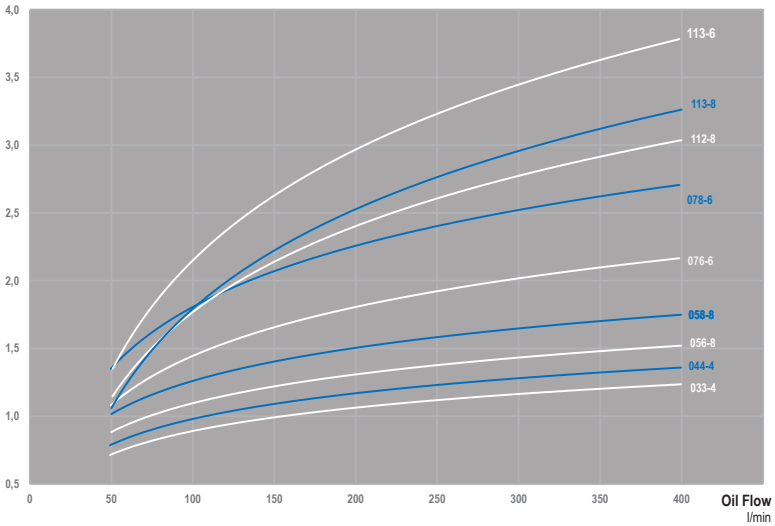

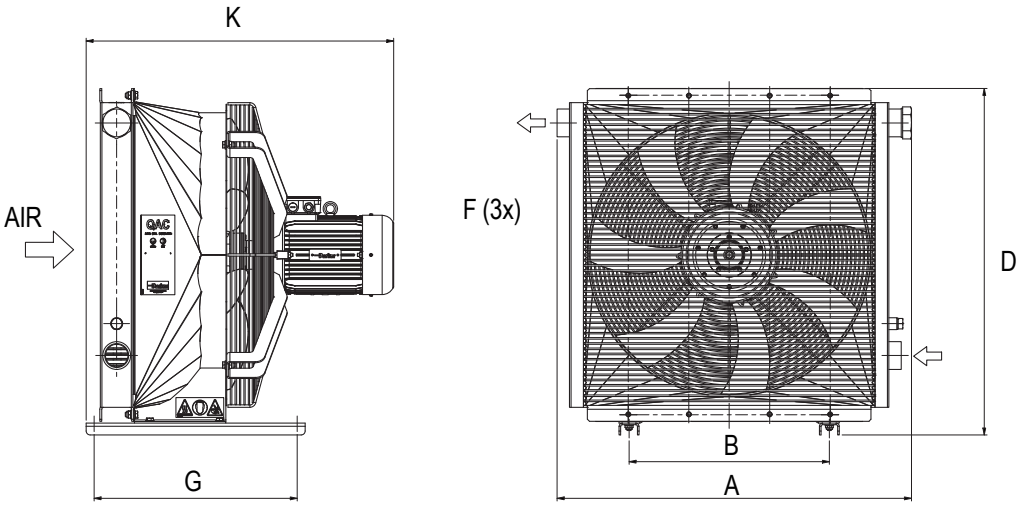

Part Number	Type	Size	Motor Type Asynchronous Motor	Motor Output (kW)	Maximum Cooling Capacity (kW/°C)	*Noise Level (dB(A))	A (mm)	B (mm)	D (mm)	F Port Size (inch)	G (mm)	K (mm)	Weight (kg)
5846033001	QAC0334AC00000000S0JB0	33	4-Pole / 50-60 Hz	0,75	1.2	77	709	356	688	G1 ¼	510	665	57
5846044001	QAC0444AC00000000S0JB0	44	4-Pole / 50-60 Hz	0,75	1.3	77	709	356	868	G1 ¼	510	665	63
5846056001	QAC0568AC00000000S0JB0	56	8-Pole / 50-60 Hz	0,75	1.6	65	876	508	870	G1 ¼	510	758	83
5846058001	QAC0588AC00000000S0JB0	58	8-Pole / 50-60 Hz	0,75	1.8	68	884	508	870	G2	510	770	95

Sound Pressure Level dB(A) measured according to ISO 3743-1.
Noise levels should be used as reference only. Noise values are affected by room properties like size, walls and surrounding equipment.

Tel: +45 63 12 83 00 | Email: ps@hymatik.com | www.hymatik.com | Hvidkaervej 27a, DK-5250 Odense SV, Denmark

Gerotor Pump, QPM3 Series

The Parker QPM3 Gerotor Pump is a low pressure pump for high efficiency.
Maximum pressure: 10 bar
Flow rate: from 10 l/min to 80l/min



PRODUCT BENEFITS

- ⇨ Low pulsation
- ⇨ Low noise level
- ⇨ High efficiency electrical motoro IE3
- ⇨ Flow rate from 10 to 80 l/min
- ⇨ Working pressure up to 10 bar

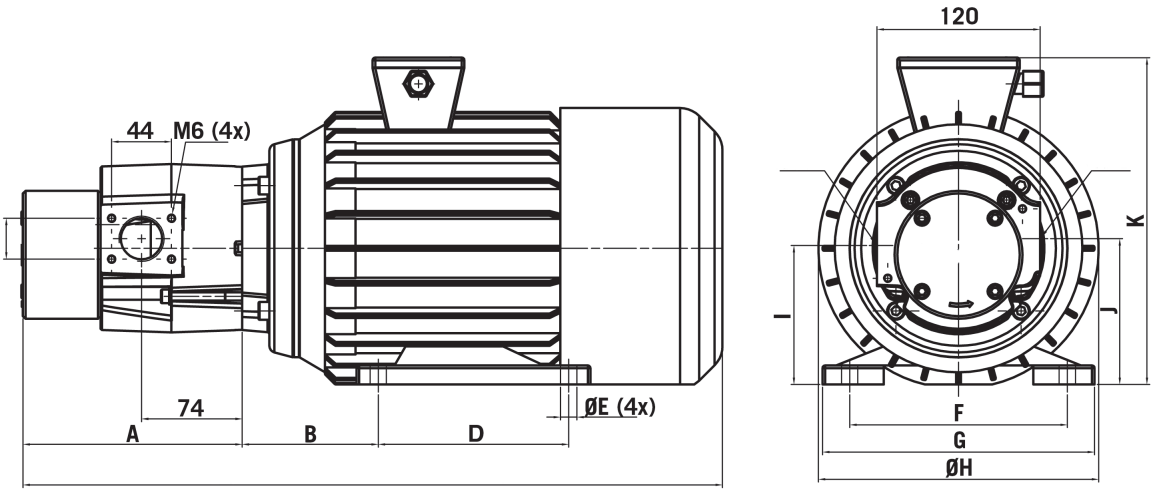

Part number	Description	Motor Power (kW)	Flow Rate (lpm)	Weight (kg)	Noise LpA dB(A) at 1m	Approx length C (mm) - may vary with motor supplier	Height K (mm)	Width H (mm)	Fixing point for feet F (mm)
58632001	QPM3 20-4-0,75 230/400-50	0,75	20	13	65	368	195	157	125
58632050	QPM3 20-4-1,5 230/400-50	1,5	20	21	66	443	220	185	140
58634001	QPM3 40-4-0,75 230/400-50	0,75	40	13	65	381	195	157	125
58634050	QPM3 40-4-1,5 230/400-50	1,5	40	21	66	456	220	185	140
58634080	QPM3 40-4-2,2 230/400-50	2,2	40	28	67	502	240	206	160
58634090	QPM3 40-4-3,0 230/400-50	3	40	28	67	502	240	206	160
58636001	QPM3 60-4-0,75 230/400-50	0,75	60	14	65	393	195	157	125
58636020	QPM3 60-4-1,5 230/400-50	1,5	60	22	66	468	220	185	140
58636050	QPM3 60-4-2,2 230/400-50	2,2	60	28	67	514	240	206	160
58636080	QPM3 60-4-3,0 230/400-50	3	60	28	67	514	240	206	160
58638001	QPM3 80-4-1,5 230/400-50	1,5	80	22	67	481	220	185	140
58638030	QPM3 80-4-2,2 230/400-50	2,2	80	28	67	527	240	206	160
58638061	QPM3 80-4-3,0 230/400-50	3	80	28	67	527	240	206	160

Tel: +45 63 12 83 00 | Email: ps@hymatik.com | www.hymatik.com | Hvidkaervej 27a, DK-5250 Odense SV, Denmark

How to size a cooler

More Cooling per €
with precise calculations and our engineers' support



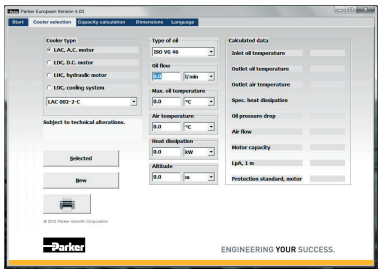

Optimal sizing produces efficient cooling. Correct sizing requires knowledge and experience. Our calculation program, combined with our engineers' support, gives you access to this very knowledge and experience. The result is more cooling per € invested. The user-friendly calculation program can be accessed on: https://divapps.parker.com/divapps/CADE/SSW/.

Valuable system review into the bargain
A more wide-ranging review of the hydraulic system is often a natural element of cooling calculations. Other potential system improvements can then be discussed – e.g. filtering, offline or online cooling, etc. Contact us for further guidance and information.

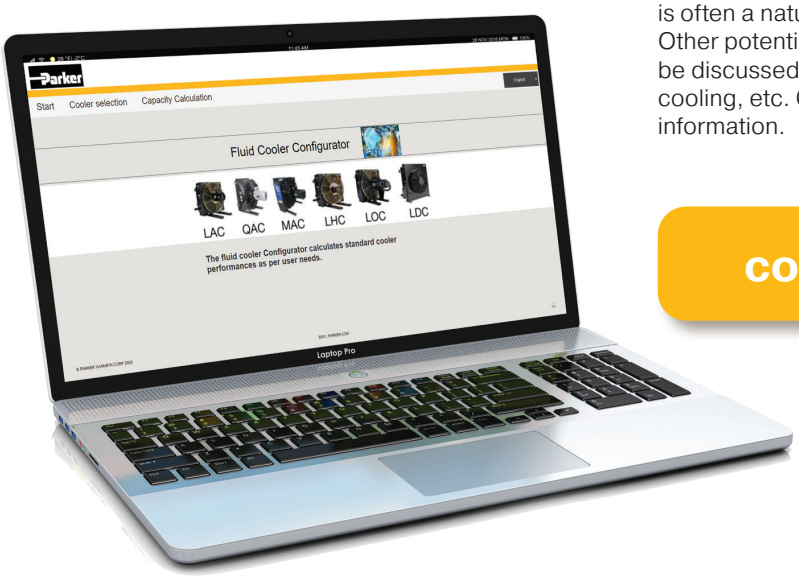

cooler sizing app

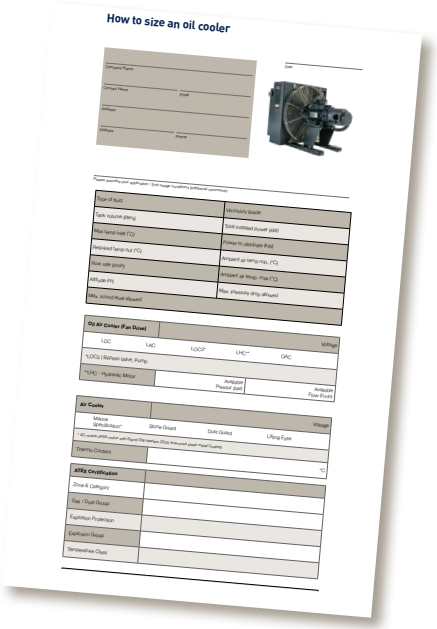

Sizing Questionnaires

Customers can complete a sizing questionnaire and send this to the local Parker Sales Office so that the most efficient cooler can be sized for your application.
You can download the sizing questionnaires from our website or click on the links below if you are viewing a digital version of this document. There are 2 questionnaires to select from:-

1. Air Oil Cooler Sizing

2. Water Oil Cooler Sizing

Tel: +45 63 12 83 00 | Email: ps@hymatik.com | www.hymatik.com | Hvidkaervej 27a, DK-5250 Odense SV, Denmark

Metric Hydraulic Cylinder, HMIF Series

Parker Series HMI Metric Hydraulic Cylinders, tie rod construction, are designed to meet the requirements of ISO 6020/2 (2006), 160 Bar Compact Series. HMI Series cylinders may be used for working pressures up to 210 Bar.



3 day despatch
Max qty-
3 units

Bore Ø	Rod Ø	Attributes
25	12	• 8 mounting styles ISO ME5 ME6 MS2 MP5 MT4 MX3 MX2 MX1 Paker JJ HH C SBd DD TB TC TD • Bore sizes 25 - 100 mm • Standard rod configurations • Maximum stroke up to 2000 mm • Standard ports • Seal groups 1 and 5 • Standard primer paint, RAL 9005 • Standard accessories to suit • Temperature ranges -20°C to +150°C depending on fluid and seal types • Working pressure up to 210 bar • Conforms to ISO 6020/2
	18	
32	14	
	22	
40	18	
	28	
50	22	
	36	
	28	
63	28	
	45	
	36	
80	36	
	56	
	45	
100	45	
	70	
	56	



Please use the e-configurator on parker.com to customise your HMIF cylinder.

Tel: +45 63 12 83 00 | Email: ps@hymatik.com | www.hymatik.com | Hvidkaervej 27a, DK-5250 Odense SV, Denmark

MyParker

One Stop Shop

A personalized, custom tailored experience between Parker and "you", making the information you want available when you want it

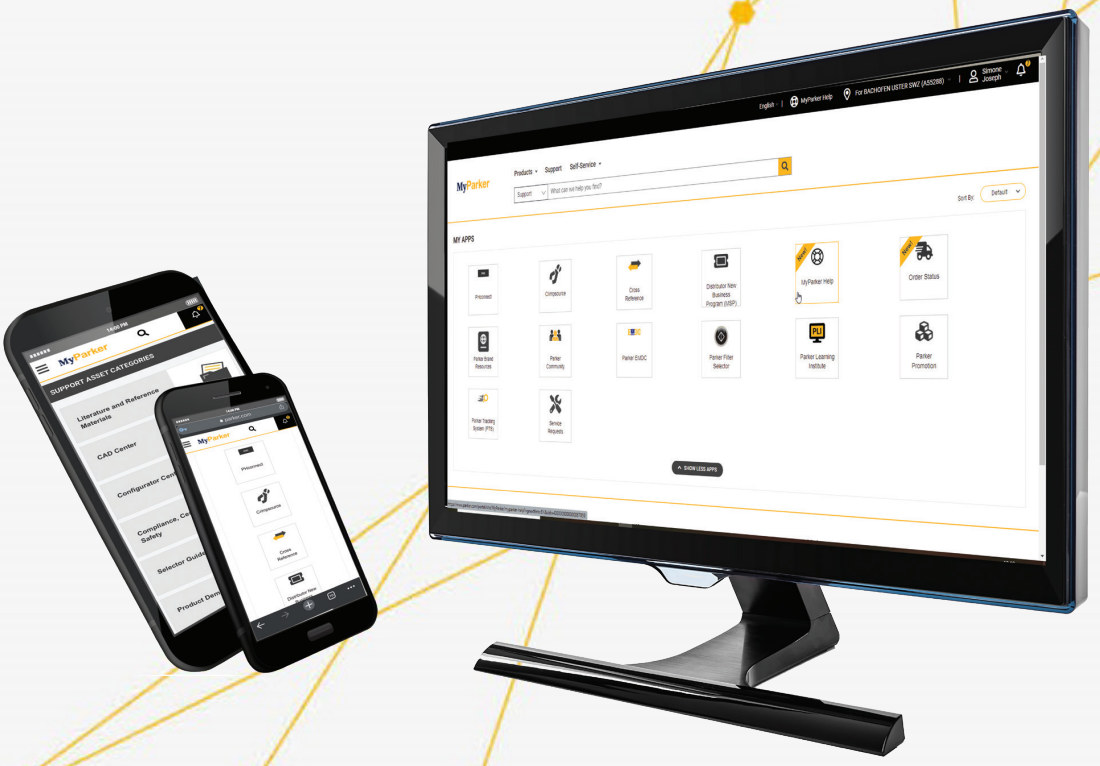

Customized access to your personal Parker documents:

- Service Requests
- Order Status
- PH connect
- Learning Institute
- Support Content
- Cross-Reference

What can we help you find?

my.parker.com

Tel: +45 63 12 83 00 | Email: ps@hymatik.com | www.hymatik.com | Hvidkaervej 27a, DK-5250 Odense SV, Denmark

The products described herein, including without limitation, product features, specifications, designs, availability and pricing, are subject to change by Parker Hannifin Corporation and its related companies at any time without notice.

© 2021 Parker Hannifin Corporation. All rights reserved.

Catalogue MSG10-4082/UK 12/2021-ZZ

EMEA Product Information Centre
Free phone: 00 800 27 27 5374
(from AT, BE, CH, CZ, DE, DK, EE, ES, FI, FR, IE, IL, IS, IT, LU, MT, NL, NO, PL, PT, RU, SE, SK, UK, ZA)

US Product Information Centre
Toll-free number: 1-800-27 27 537

www.parker.com

Your local authorized Parker distributor