IR4000 Series

Single Stage, General Purpose Pressure Regulator
Internally Threadless, Stainless Steel



Value Proposition:

The IR4000 Series regulator offers high pressure capability with an inlet pressure up to 4,000 psig. The large convoluted Hastelloy C-22® diaphragm provides stable pressure control over the operational range of the regulator.

Close tolerances and tight alignment of moving components minimize hysteresis and improve cycle life. Convoluted, Hastelloy C-22® diaphragm provides high corrosion resistance and increases cycle life.



Contact Information:

Parker Hannifin Corporation
Veriflo Division
250 Canal Blvd
Richmond, California 94804

phone 510 235 9590
fax 510 232 7396
veriflo.sales@parker.com

www.parker.com/veriflo
Mobile App: m.parker.com/veriflo

Product Features:

- Unique compression member loads the seal to the body without requiring a threaded nozzle or additional seals
- Internally threadless design reduces particle generation. Low internal volume reduces purge times.
- Cleaned for O_2 service is standard
- Positive upward and downward stops increase cycle life by preventing over stroking of the diaphragm
- Selection of seat materials for media compatibility and temperature applications
- Express Service Program available noted in *green italic print*

Parker Veriflo

ENGINEERING YOUR SUCCESS.

IR4000 SERIES

Flow Curves

Additional flow curves available upon request

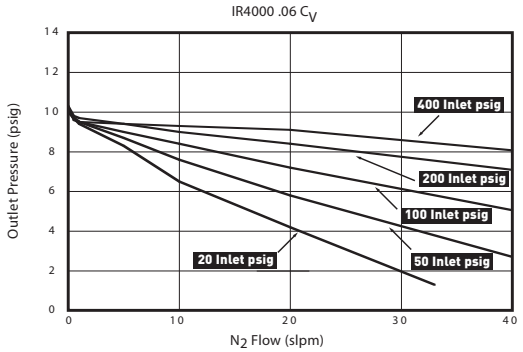

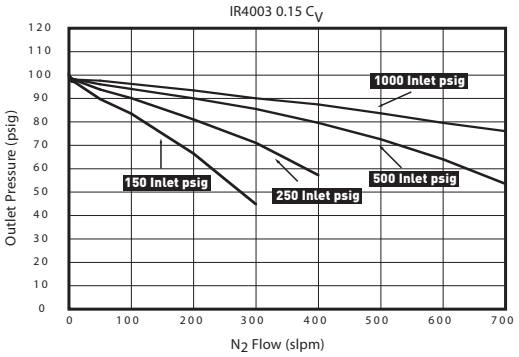

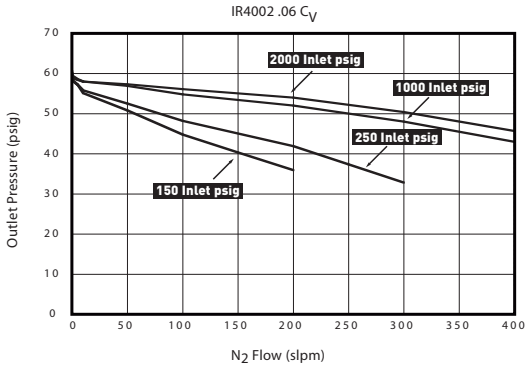

RANGE TABLE			
Basic Model	Max Inlet PSIG		
	0.06 C_V	**0.02 C_V**	**0.15 C_V**
IR4000	400	400	400
IR4001	4000	4000	1250
IR4002	4000	4000	1250
IR4003	4000	4000	4000*
IR4004	4000	4000	1250
IR4005	4000	4000	1250
IR4015	4000	4000	4000*

* 4000 PSIG max inlet pressure for PCTFE seats only (HP option).
1250 PSIG max inlet pressure for PEEK and Vespel seats.

When setting the delivery pressure, ensure that the maximum outlet pressure of the regulator is not exceeded for any operating condition including increases in delivery pressure due to flow shutoff and supply pressure effect. Supply pressure effect will result in a significant rise in outlet pressure as the inlet pressure decreases.

The stop settings will be adjusted to accommodate typical inlet and outlet pressure ranges. Please contact the factory if specific stop settings are required.

Refer to the Safety Guide 25000194 and the Pressure Regulators Installation and Operation Guide 25000169 for more information.

Dimensional Drawing

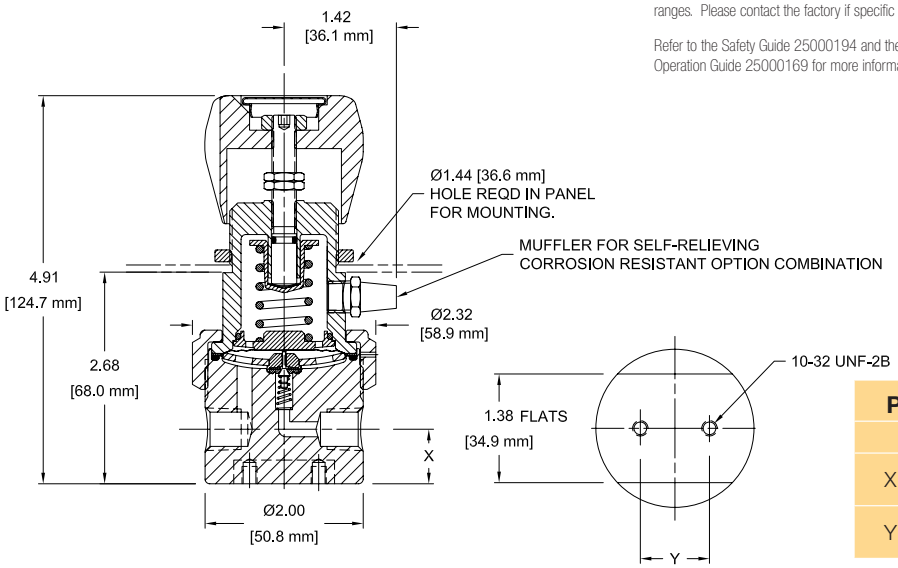

PORT MOUNTING		
	A	B (Std)
X	0.69 (17.5mm)	0.75 (19.1mm)
Y	0.88 (22.2mm)	0.75 (19.1mm)

Safety Guide and Installation and Operating Instructions available at
www.parker.com/veriflo

IR4000 SERIES

Ordering Information

Build an IR4000 Series regulator by replacing the numbered symbols with an option from the corresponding tables below.

Color Explanations: Black = Standard Lead Time Configurations
Blue = Extended Lead Time Configurations
Green Italic = Express Service Program (ESP)

For an explanation of Ordering options please reference literature 25000275 at www.parker.com/veriflo

	1	2	3	4	5	6	7	8	9	10	11
Sample:	IR40	02	S		K	4P	01	30	4	B	R	580
Finished Order:	IR4002SK4P01304BR580											

1 Basic Series

Range	Outlet Gauge
00 = 0 - 10 psig	*0 - 30 psig*
01 = 1 - 30 psig	*0 - 60 psig*
02 = 2 - 60 psig	*0 - 100 psig*
03 = 3 - 100 psig	*0 - 200 psig*
15 = 5 - 150 psig	*0 - 200 psig*
04 = 10 - 250 psig	*0 - 400 psig*
05 = 20 - 500 psig	*0 - 600 psig*

2 Body Material (1)

S = 316L Stainless Steel
H = Hastelloy C-22® *SST gauges*
M = Monel® *SST gauges*
A = 316L Annealed, ≤22HRC

3 Flow Capacity

= 0.06 C_V Standard
1 = 0.02 C_V
2 = 0.15 C_V

4 Seat Material

K = PCTFE
P = PEEK™
V = Vespel®

5 Porting

2P = 2 Ports No X required for gauges, inlet & outlet ports only
3P = 3 Ports One X for gauge port
4P = 4 Ports Two X's for gauge ports
4PB = 4 Ports One X for gauge port
5P = 5 Ports Two X's for gauge ports
See Regulator Porting Guide for additional options and port layouts

Note: Ports may be plugged for NPT threaded product.

6 Outlet Gauge

Outlet Gauge	Basic Series
03 = 0 - 30 psig	*IR4000*
OL = 0 - 60 psig	*IR4001*
01 = 0 - 100 psig	*IR4002*
2 = 0 - 200 psig	*IR4003*
4 = 0 - 400 psig	*IR4004*
6 = 0 - 600 psig	*IR4005*
X = No Gauge	

Additional ranges available upon request

7 Inlet Gauge

X = No Gauge
30 = 3000 psig Standard
4 = 400 psig with the 10 psig range
20 = 2000 psig with the 0.15 Cv option
40 = 4000 psig
Additional ranges available upon request

8 Port Style

2 = 1/8" NPT Female
4 = 1/4" NPT Female
6 = 3/8" NPT Female
4T = 1/4" A-LOK®
6T = 3/8" A-LOK®
All Gauge ports are 1/4" NPT Female

9 Port Mounting

A = 0.69 (17.5mm) port height w/0.88 (22.2mm) mounting
B = 0.75 (19.1mm) port height w/0.75 (19.1mm) mounting
Standard

10 Optional Features

This section can have multiple options

B = True Ported Body *No plugs*
C = Corrosion Resistant External *Stainless Steel Cap*
D = Dome Loaded *Not available with G or M options*
G = Tamper Proof *Not available with D or M options*
M = Metal Knob *(Black) Not available with D or G options. Required for temperatures above 150° F*
L = PTFE Backup O-Ring *PCTFE and PEEK™ Seats Only*
R = Relief Valve 4PB and 5P Only
S = Self Relieving *Temperature rating -40°F to 150°F (-40°C to 66°C)*
V = Outlet Valve NV17SS44MF
T = Hastelloy Trim *Includes carrier and back-up washer. Option is for Stainless Steel body - Hastelloy® trim is std with Hastelloy® and Monel® bodies*
HP = 4000 psig Max Inlet Pressure *For .15 C_V IR4003 and IR4015 with PCTFE seats only*

Note: Panel Mount Option:
Order Panel Nut Ring p/n: 41900363 as a separate line item.
Vent Muffler Option:
Order Vent Muffler p/n: 46600581 as a separate line item.

Vent Muffler is standard for the Self-Relieving(S), Corrosion Resistant(C) option combination.

11 CGA#

320, 330, 350, 510, 580, 590 or 660
Do not exceed the rated pressure of the CGA connection.

NOTE:

(1) Option recommendations for H_2S-containing fluids

Body option "H" (Hastelloy C-22®) and "A" (316L annealed, ≤22HRC) utilize materials for critical wetted parts that are compliant with NACE® standard MR0175/ISO 15156-3:2003/Cor.2:2005(E), *Petroleum and natural gas industries – Materials for use in H_2S-containing environments in oil and gas production, Part 3: Cracking-resistant CRAs (corrosion-resistant alloys) and other alloys.* These wetted materials are resistant to cracking in H_2S - containing fluids, but are not necessarily immune to cracking under all service conditions. The user should consult MR0175/ISO 15156 for further guidance. The user should consult Instrumentation Product Division Catalog 4230/4233 for A-Lok Tube Fitting application recommendations. It is the user's responsibility to select materials suitable for the intended service.

The following options and accessories are not recommended for H_2S-containing fluids:

- Pressure gauges
- S – Self Relieving
- R - Relief valve
- V – Outlet Valve NOVAS44MF
- CGA connections

IR4000 Series

Specifications

Materials of Construction	
Wetted	**See Note (1) on Page 3**
Body Options	316L Stainless Steel (std), Hastelloy C-22® or Monel® (*Hastelloy® Trim is std with Hastelloy® and Monel® bodies)*
Compression Member	Inconel 625®
Diaphragm	Hastelloy C-22®
Poppet	Hastelloy C-276®
Poppet Spring	Inconel X750®
Seat Options	PCTFE (std), Vespel® or PEEK™
Carrier Options	316L Stainless Steel (std) or Hastelloy C-22®
Washer Back-up Options	316 Stainless Steel (std) or Hastelloy C-276®
O-ring Back-up Options	FKM (std) or PTFE
Inlet Screen / Filter	316 Stainless Steel (std) (60µm mesh screen, 10µm Filter) Hastelloy® (on Hastelloy®, Monel® bodies)
Self Relieving Seat	PEEK™
Non-wetted	
Cap Options	Nickel Plated Brass (std) or Stainless Steel
Nut	Stainless Steel
Knob Options	ABS (std) (ambient temp) or Aluminum

Functional Performance	
Design	
Burst Pressure	12,000 psig (828 barg)
Proof Pressure	6,000 psig (414 barg)
Flow Capacity	
C_V Options	C_V 0.06 (std), C_V 0.02, C_V 0.15
Leak Rate	
Internal	Bubble Tight
External	Bubble Tight
Supply Pressure Effect	*Based upon C_V Option*
0.02 C_V	0.23 psig/100 psig (0.016 barg/7 barg)
0.06 C_V	0.6 psig/100 psig (0.04 barg/7 barg)
0.15 C_V	1.5 psig/100 psig (0.1 barg/7 barg)
Internal Volume	4.0 cc without fittings
Approx. Weight	1.5 lbs. (0.7 kg)
Operating Conditions	
Maximum Inlet	Refer to Range Table for specific information
Outlet Options	0-10 psig (.7 barg), 1-30 psig (2 barg), 2-60 psig (4 barg), 3-100 psig (7 barg), 5-150 psig (10 barg), 10-250 psig (17 barg), 20-500 psig (35 barg)
Temperature	Metal Knob required for temperatures above 150°F
PCTFE	-40°F to 150°F (-40°C to 66°C)
PEEK™	-40°F to 275°F (-40°C to 135°C)
Vespel®	-40°F to 500°F (-40°C to 260°C)
Self Relieving Option	-40°F to 150°F (-40°C to 66°C)

For additional information on materials of construction, functional performance and operating conditions, see Regulator Technical Bulletin.

A-LOK® is a registered trademark of Parker Hannifin Corporation
Hastelloy C-22® and Hastelloy C-276® are registered trademarks of Haynes International, Inc.
PEEK™ is a trademark of Victrex plc.
Inconel® and Monel® are registered trademarks of Special Metals Corporation.
Vespel® is a registered trademark of DuPont Performance Elastomers L.L.C.

OFFER OF SALE:

The items described in this document are hereby offered for sale by Parker-Hannifin Corporation, its subsidiaries or its authorized distributors. This offer and its acceptance are governed by the provisions stated in the detailed "Offer of Sale" elsewhere in this document or available at www.parker.com/veriflo

WARNING USER RESPONSIBILITY

FAILURE OR IMPROPER SELECTION OR IMPROPER USE OF THE PRODUCTS DESCRIBED HEREIN OR RELATED ITEMS CAN CAUSE DEATH, PERSONAL INJURY AND PROPERTY DAMAGE. THIS DOCUMENT IS FOR REFERENCE ONLY. PLEASE CONSULT FACTORY FOR LATEST PRODUCT DRAWINGS AND SPECIFICATIONS

This document and other information from Parker-Hannifin Corporation, its subsidiaries and authorized distributors provide product or system options for further investigation by users having technical expertise.

The user, through its own analysis and testing, is solely responsible for making the final selection of the system and components and assuring that all performance, endurance, maintenance, safety and warning requirements of the application are met. The user must analyze all aspects of the application, follow applicable industry standards, and follow the information concerning the product in the current product catalog and in any other materials provided from Parker or its subsidiaries or authorized distributors.

To the extent that Parker or its subsidiaries or authorized distributors provide component or system options based upon data or specifications provided by the user, the user is responsible for determining that such data and specifications are suitable and sufficient for all applications and reasonably foreseeable uses of the components or systems.

The products described herein, including without limitation, product features, specifications, designs, availability and pricing are subject to change by Parker Hannifin Corp and it's subsidiaries at any time without notice.

Proposition 65 Warning: This product contains chemicals known to the state of California to cause cancer or birth defects or other reproductive harm.

© 2009 Parker Hannifin Corporation

Use mobile device to scan this QR Code.

LitPN: 25000226 Rev: N Date of Issue 03/2013

Parker Veriflo

ENGINEERING YOUR SUCCESS.