

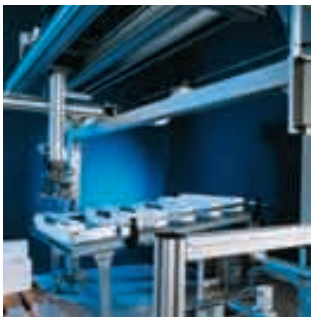

aerospace
climate control
electromechanical
filtration
fluid & gas handling
hydraulics
pneumatics
process control
sealing & shielding





B Series Valves

High Flow Inline, Manifold Mounted, Solenoid & Pilot Operated

G1/8 and G1/4 Body ported

Catalogue PDE2582TCUK-ca. Edition July 09



Parker

ENGINEERING YOUR SUCCESS.

Compact installation dimensions - flexible installation



Compact dimensions, direct body porting and integral mounting holes are all features of the B series valve range. Valves may be mounted singly or on compact modular manifolds that can be extended to accomodate changes in the machine control system.

Manifold mounting



IEM stackable manifold system is designed to give maximum flexibility to system designers. Individual manifold bases stack together to form lightweight custom length manifold that can easily be modified to accommodate changes to system requirements.

High reliability

Valves easily comply with the requirements for component reliability in accordance with EU Machinery Directive standards EN292-2 and EN983.

A wide range of solenoid valves

Solenoid operated versions of the B3 & B4 valves are fitted with interface to accept the 15mm wide solenoid and Form C / ISO 15217 connector. The valve has small installation dimensions, low energy consumption. The B5 is also available with the 22mm wide solenoid suitable for (EN175301-803 form B) connector.
The solenoid operators are available with or without manual overrides.

Different solenoid connector options

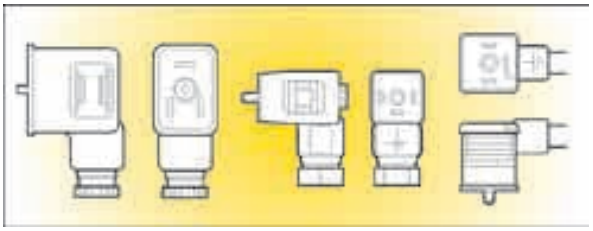

A large range of solenoid connectors are available with or without suppression, LED and rectifier and complete with moulded lead.

Maintenance

All B series valves have reliable function and long service life. Spare solenoid and repair kits are available.

WARNING

FAILURE OR IMPROPER SELECTION OR IMPROPER USE OF THE PRODUCTS AND/OR SYSTEMS DESCRIBED HEREIN OR RELATED ITEMS CAN CAUSE DEATH, PERSONAL INJURY AND PROPERTY DAMAGE.
This document and other information from Parker Hannifin Corporation, its subsidiaries and authorized distributors provide product and/or system options for further investigation by users having technical expertise. It is important that you analyze all aspects of your application and review the information concerning the product or system in the current product catalog. Due to the variety of operating conditions and applications for these products or systems, the user, through its own analysis and testing, is solely responsible for making the final selection of the products and systems and assuring that all performance, safety and warning requirements of the application are met. The products described herein, including without limitation, product features, specifications, designs, availability and pricing, are subject to change by Parker Hannifin Corporation and its subsidiaries at any time without notice.

SALE CONDITIONS

The items described in this document are available for sale by Parker Hannifin Corporation, its subsidiaries or its authorized distributors. Any sale contract entered into by Parker will be governed by the provisions stated in Parker's standard terms and conditions of sale (copy available upon request).

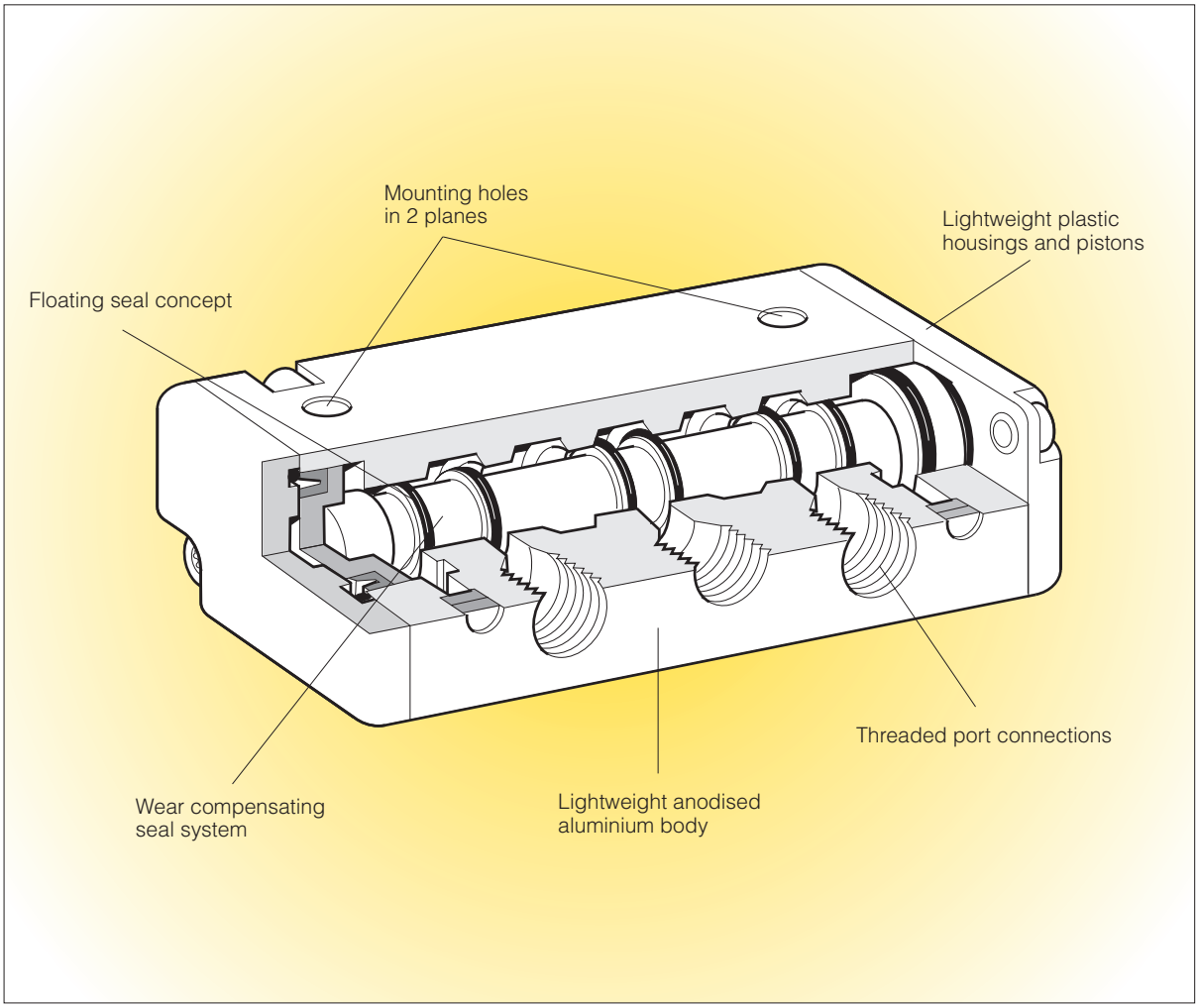

WCS
Wear Compensating System

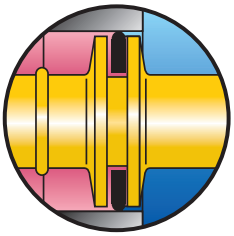

“Wear Compensating System”

The B series valves are fitted with dynamic bi-directional spool seals suitable for vacuum or pressures up to 10 bar. Under pressure radial expansion of the seal occurs to maintain sealing contact with the valve bore.

This sealing method reduces friction gives lower pilot pressures, fast response and less wear. Valves do not require lubrication in operation but they can also be installed in systems that are lubricated.

Flow Characteristics

Flow characteristics

Flow capacities in accordance with ISO6358
All pressures = effective pressure
The curves in the diagram below are typical only

Technical Data B3

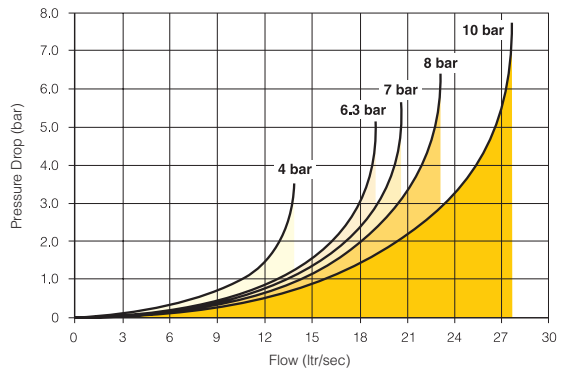

Port size	G1/8
Operating pressure.	Vacuum - 10 bar
Working temperature.	
Pneumatically operated valves.	-10°C to + 50°C
Solenoid operated valves.	-10°C to + 50°C
Response times:	
Single sol spring return	
Single sol air spring return	24/26ms
Double solenoid operated	13/15ms
Flow (acc. to ISO 6358)	c = 2.3
	b = 0.45
	Qn = 13 l/s
	Qmax = 16 l/s
	Cv = 0.75

Technical Data B4

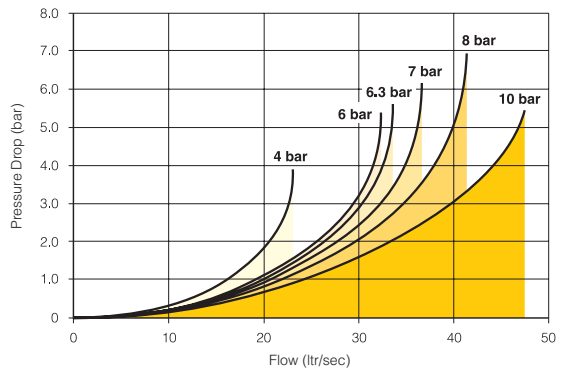

Port size	G1/4
Operating pressure.	Vacuum - 10 bar
Working temperature.	
Pneumatically operated valves.	-10°C to + 50°C
Solenoid operated valves.	-10°C to + 50°C
Response times:	
Single sol spring return	
Single sol air spring return	38/38ms
Double solenoid operated	23/24ms
Flow (acc. to ISO 6358)	c = 4.56
	b = 0.30
	Qn = 19.5 l/s
	Qmax = 32 l/s
	Cv = 1.2

Technical Data B5

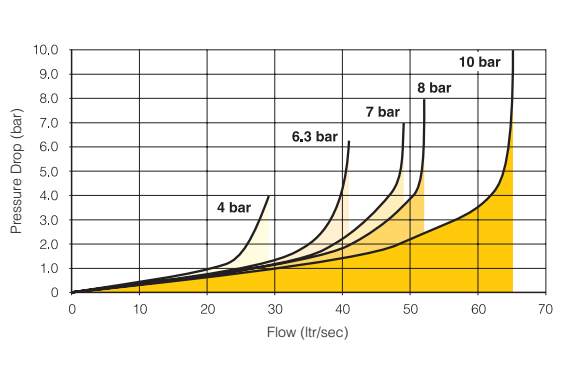

Port size	G1/4
Operating pressure.	Vacuum - 10 bar
Working temperature.	
Pneumatically operated valves.	-10°C to + 50°C
Solenoid operated valves.	-10°C to + 50°C
Response times:	
Single sol spring return	
Single sol air spring return	38/40ms
Double solenoid operated	16/18ms
Flow (acc. to ISO 6358)	Qn = 24 l/s
	Qmax = 37 l/s
	Cv = 1.4

Directional Control Valves B Series

B3 valve

Valve body	Anodised aluminium
End covers	Anodised aluminium or Reinforced thermoplastic
Spool	Aluminium + nitrile rubber
Piston	Acetal plastic/ Anodised aluminium
U-rings, O-rings	Nitrile rubber
End cover sealings	Nitrile rubber
End cover screws	Stainless steel
Springs	Dacromet® - processed steel, Stainless steel
Mounting screws for solenoid	Stainless steel

B3 Accessories

IEM manifold	Glass filled nylon
End plates	Anodised aluminium
Manifold connecting screws	Zinc plated steel

B4 valve

Valve body	Anodised aluminium
Spool	Acetal plastic/ Anodised aluminium
Piston	Acetal plastic /Anodised aluminium
Lining	Reinforced thermoplastic
End covers	Anodised aluminium
Sliding seals	Thermoplastic
U-rings, O-rings	Nitrile rubber
End cover sealings	Nitrile rubber
Push buttom for manual changeover	Acetal plastic
End cover screws	Stainless steel
Springs	Stainless steel
Mounting screws for solenoid	Zinc-plated steel

B4 Accessories

IEM manifold	Glass filled nylon
End plates	Anodised aluminium
Manifold connecting screws	Zinc plated steel

B5 valve

Valve body	Anodised aluminium
Spool	Aluminium + nitrile rubber
Piston	Brass
Lining	Brass
End covers	Anodised aluminium
Sliding seals	Thermoplastic
U-rings, O-rings	Nitrile rubber
End cover sealings	Nitrile rubber
End cover screws	Stainless steel
Springs	Stainless steel
Mounting screws for solenoid	Zinc plated steel

B5 Accessories

IEM manifold	Glass filled nylon
End plates	Anodised aluminium
Manifold connecting screws	Zinc plated steel

Metal Spool Valves

B3

- G1/8 ports, 3/2, 5/2 and 5/3 functions
- Inlet-exhaust manifold facility
- DIN rail mounting
- Integral mounting holes
- 1.2 watt solenoid actuators
- FormC/ISO15217 connector



Operating information

Working pressure	Vacuum - 10 bar	Flow (3/2) and (5/2) (acc. to ISO 6358)	C = 2,3
Working temperature;			b = 0,45
Pneumatically actuated	-10°C to +60°C		Qn = 13 l/s
Electrically actuated	-10°C to +50°C		Qmax = 16 l/s
			Cv = 0,6

B 3 | 2 | 5 | B | B | 5 | 49 | H

	Basic series
B3	Ported valve

	Port size
5	G1/8

Operator function		
3 Port		
G		3/2 N/C Single sol - air differential return
J		3/2 Double solenoid
K		3/2 N/C Remote air pilot - air differential return
M		3/2 Double remote air pilot
R		3/2 N/C Single sol - spring return
S		3/2 N/C Single sol - remote air pilot return
U		3/2 N/C Remote air pilot - spring return
5 Port		
1		5/2 Single sol - air differential return
2		5/2 Double solenoid
3		5/2 Remote air pilot - air differential return
4		5/2 Double remote air pilot
5		5/3 Double solenoid - all ports blocked (APB)
6		5/3 Double solenoid - cyl to exhaust ports (CE)
7		5/3 Double solenoid - press to cylinder ports (PC)
8		5/3 Double remote operated - all ports blocked (APB)
9		5/3 Double remote operated - (CE) ①
0		5/3 Double remote operated - (PC) ②
A		5/2 Single sol - remote air pilot return
P		5/2 Remote air pilot - spring return
T		5/2 Single sol - spring return

Shaded part numbers are standard

	Pilot source / Exh / Pilot exhaust
0	None (Air pilot only)
B	Port 1 / Vented / Side

	Solenoid overrides / Lights
0	None (Air pilot only)
B	Spring return, flush without light
C	Locking, flush without light
X	None (Solenoid valve less solenoid)

	Solenoid Enclosures
0	None (Air pilot only)
5	15mm connector
X	None

	Pilot operator / Coil voltage[1]
39	12V 50Hz
43	24V 50Hz
44	48V 50Hz
45	12V DC
49	24V DC
53	110V 50Hz
57	220V 50Hz
XX	Valve less solenoid operator

[1] Shaded part numbers are standard
Unshaded part numbers are available on request but will be subject to minimum order quantities
Otherwise order XX version and order solenoid separately.

Engineering level H

① Cyl to exhaust ports (CE)
② Press to cylinder ports (PC)

Tel: +45 63 12 83 00 | Email: ps@hymatik.com | www.hymatik.com | Hvidkaervej 27a, DK-5250 Odense SV, Denmark

Main data for Directional control valves, B3 Series

	Symbol	Actuator	Return	Signal pressure min, bar at 6 bar actua./return	Changeover time, ms at 6 bar actua./return	Weight Kg	Voltage	Order code	Qty
Pneumatically actuated 3/2 valves									
		Air	Differential air	1,4/-	16/17	0,07		**B3K5000XXH**	1
		Air	Spring return	3,0/-	20/18	0,07		**B3U5000XXH**	1
		Air	Air	1,4/-	2/2	0,08		**B3M5000XXH**	1
Pneumatically actuated 5/2 and 5/3 valves									
		Air	Differential air	1,4/-	16/17	0,09		**B335000XXH**	1
		Air	Spring return	3,0/-	20/18	0,09		**B3P5000XXH**	1
		Air	Air	1,4/1,4	2/2	0,10		**B345000XXH**	1
		Air Closed centre position	Air Self centring	3,0/3,0	12/12	0,10		**B385000XXH**	1
		Air Vented centre position	Air Self centring	3,0/3,0	12/12	0,10		**B395000XXH**	1
	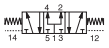	Air Pressurised centre position	Air Self centring	3,0/3,0	12/12	0,10		**B305000XXH**	1
Electrically actuated 3/2 valves									
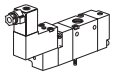		Electric	Differential air	1,4/-	12/14	0,12 0,08	24 VDC Less solenoid	**B3G5BB549H** **B3G5BXXXXH**	1 1
		Electric	Spring return	3,0/-	22/28	0,12 0,08	24 VDC Less solenoid	**B3R5BB549H** **B3R5BXXXXH**	1 1
		Electric	Air	1,4/1/4	9/3	0,13 0,09	24 VDC Less solenoid	**B3S5BB549H** **B3S5BXXXXH**	1 1
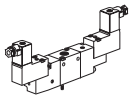		Electric	Electric	1,4/1/4	8/8	0,13 0,09	24 VDC Less solenoid	**B3J5BB549H** **B3J5BXXXXH**	1 1
Electrically actuated 5/2 valves									
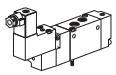		Electric Air	Differential Air	1,4/-	12/14	0,12 0,09	24 VDC Less solenoid	**B315BB549H** **B315BXXXXH**	1 1
		Electric	Spring return	3,0/-	22/28	0,12 0,09	24 VDC Less solenoid	**B3T5BB549H** **B3T5BXXXXH**	1 1
		Electric	Air	1,4/1/4	9/3	0,14 0,10	24 VDC Less solenoid	**B3A5BB549H** **B3A5BXXXXH**	1 1
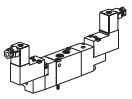		Electric	Electric	1,4/1/4	8/8	0,19 0,10	24 VDC Less solenoid	**B325BB549H** **B325BXXXXH**	1 1

Main data for Directional control valves, B3 Series

	Symbol	Actuator	Return	Signal pressure min, bar at 6 bar actua./return	Changeover time, ms at 6 bar actua./return	Weight Kg	Voltage	Order code	Qty
Electrically actuated 5/3 valves									
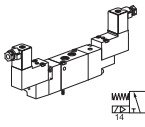	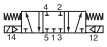	Electric Closed centre position	Electric Self centring	3,0/3,0	12/12	0,18 0,09	24 VDC Less solenoid	**B355BB549H** **B355BXXXXH**	1 1
		Electric Vented centre position	Electric Self centring	3,0/3,0	12/12	0,18 0,09	24 VDC Less solenoid	**B365BB549H** **B365BXXXXH**	1 1
	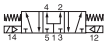	Electric Pressurised centre position	Electric Self centring	3,0/3,0	12/12	0,10 0,09	24 VDC Less solenoid	**B375BB549H** **B375BXXXXH**	1 1

Internal air supply to differential pilots and solenoids via port 1
Silencers and push-in fittings are shown on page 27.

Valves supplied with solenoid operators include standard P8C-D connector

Inlet Exhaust Manifolds for B3 series valves

Standard Base without Flow Controls

Each kit contains:
1 pcs Manifold Base
2 pcs Mounting screws and nuts
3 pcs Tie Rods
1 pcs Body-to-base Gasket and
1 pcs Base-to-Base Gasket

		Order code	Qty
Manifold Base Kit	3/2 =	PS2948F	1
	5/2 =	PS2917F	1

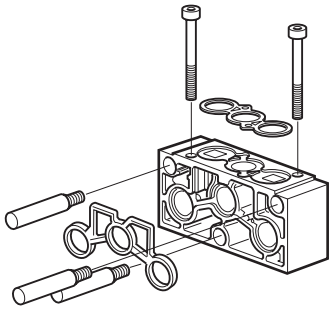

End plates

Standard End Plates may be used with either of above Manifold Bases

Each kit contains:
1 right and 1 left End Plate
3 pcs O-Rings
3 pcs Blanking Plugs
3 pcs Socket Head Cap Screws
3 pcs Flat Washers
3 pcs Lockwashers

		Order code	Qty
Manifold End plate kit	3/2 =	PS2951F	1
	5/2 =	PS2916F	1

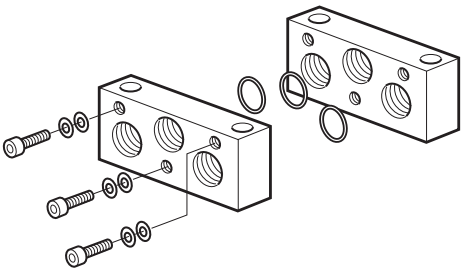

Isolator Plug Kit

Used to isolate the 1, 3 or 5 gallery between two Manifold Bases

Each kit contains:
3 pcs Isolator Plugs complete with O-rings.

	Order code	Qty
Isolator Plug Kit	PS2919F	1

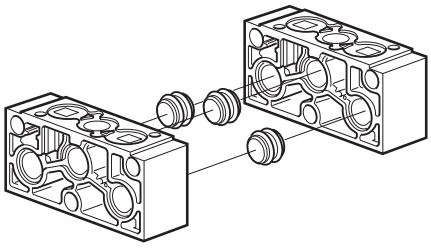

Manifold Blanking Plate

Each kit contains:
1 pcs Cover Plate
2 pcs Mounting Screws
1 pcs Gasket
Used to blank off unused stations.

		Order code	Qty
Manifold Blanking Plate	3/2 =	PS2968F	1
	5/2 =	PS2969F	1

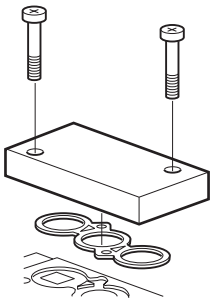

Dimensions, B3 Valve Series

3/2 Body ported
Single solenoid operated air spring return / spring return

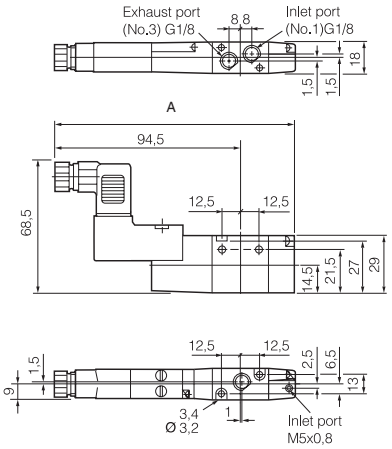

	Air differential return	Spring return
A	130,5	136,7

Double solenoid operated

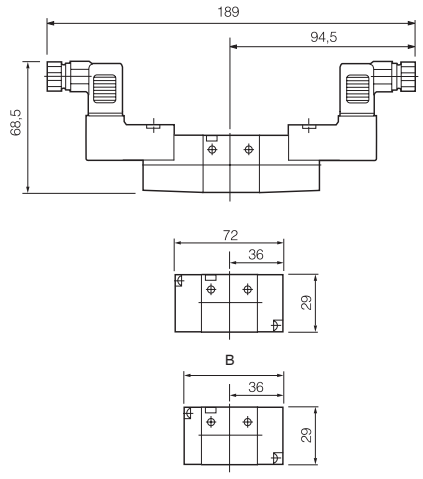

	Air differential return	Spring return
B	67,0	73,2

5/2 Body ported
Single solenoid operated air spring return / spring return

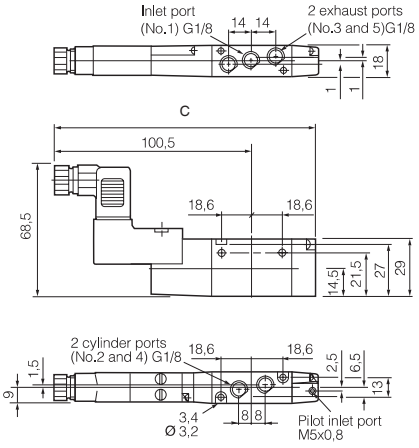

	Air differential return	Spring return
C	137,5	143,7

Double solenoid operated

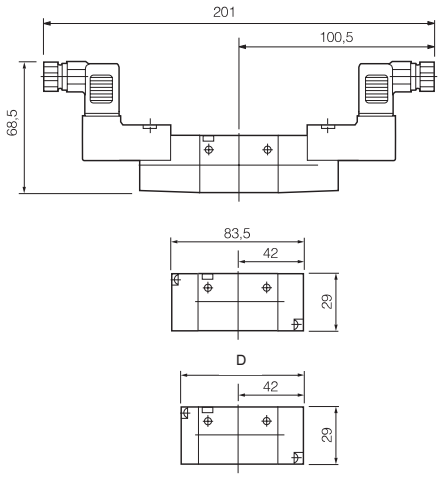

	Air differential return	Spring return
D	79,0	85,2

All dimensions in mm unless otherwise stated

Dimensions, B3 Valve Series

5/3 Body ported

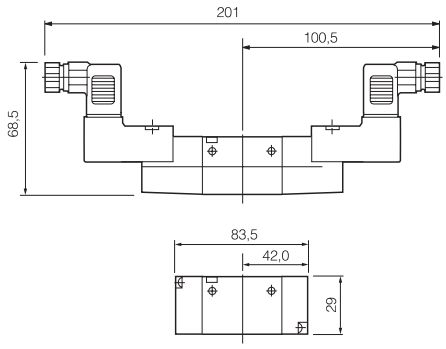

Manifolds - IEM Inlet Exhaust Manifold System

3/2 Inlet Exhaust Manifold
For B3 Body Ported Valves

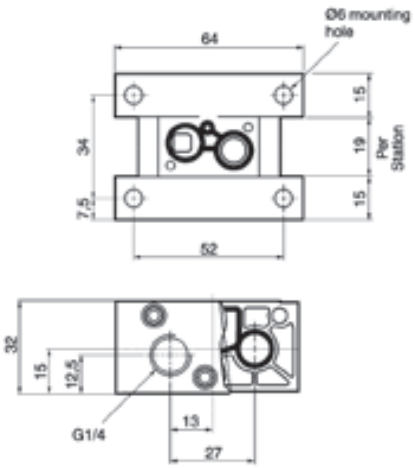

5/2 Inlet Exhaust Manifold
For B3 Body Ported Valves

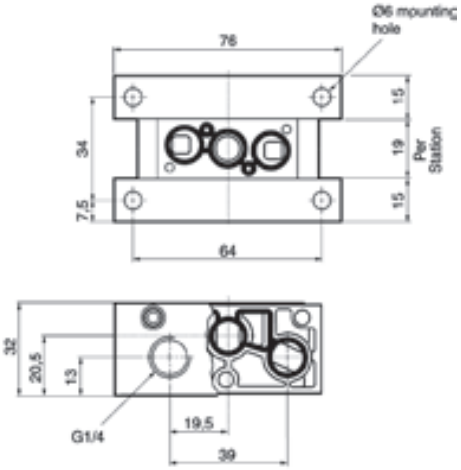

All dimensions in mm unless otherwise stated

Tel: +45 63 12 83 00 | Email: ps@hymatik.com | www.hymatik.com | Hvidkaervej 27a, DK-5250 Odense SV, Denmark

Metal Spool Valves

B4

- G1/4 ports, 3/2, 5/2 and 5/3 functions
- Inlet-exhaust manifold facility
- DIN rail mounting
- Integral mounting holes
- 1.2 watt solenoid actuators
- Form C / ISO 15217 connector



Operating information

Working pressure	Max 10 bar	Flow (3/2) and (5/2) (acc. to ISO 6358)	C = 4,56
Working temperature;			b = 0,30
Pneumatically actuated	-10°C to +60°C		Qn = 19,5 l/s
Electrically actuated	-10°C to +50°C		Cv = 1,2

B 4 — 2 — 6 — A — B — 5 — 49 — F

	Basic series
B4	Ported valve

	Port size
6	G1/4

Operator function		
3 Port		
G		3/2 N/C Single sol - air differential return
J		3/2 Double solenoid
K		3/2 N/C Remote air pilot - air differential return
M		3/2 Double remote air pilot
R		3/2 N/C Single sol - spring return
S		3/2 N/C Single sol - remote air pilot return
U		3/2 N/C Remote air pilot - spring return
5 Port		
1		5/2 Single sol - air differential return
2		5/2 Double solenoid
3		5/2 Remote air pilot - air differential return
4		5/2 Double remote air pilot
5		5/3 Double solenoid - all ports blocked (APB)
6		5/3 Double solenoid - cyl to exhaust ports (CE)
7		5/3 Double solenoid - press to cylinder ports (PC)
8		5/3 Double remote operated - all ports blocked (APB)
9		5/3 Double remote operated - (CE) ①
0		5/3 Double remote operated - (PC) ②
A		5/2 Single sol - remote air pilot return
P		5/2 Remote air pilot - spring return
T		5/2 Single sol - spring return

Shaded part numbers are standard

	Pilot source / Exh / Pilot exhaust
0	None (Air pilot only)
A	Port 1 / Tapped / Side

	Solenoid overrides / Lights
0	None (Air pilot only)
B	Spring return, flush without light
C	Locking, flush without light
X	None (Solenoid valve less solenoid)

	Solenoid Enclosures
0	None (Air pilot only)
5	15mm connector
X	None (Valve less 15mm solenoid)

	Pilot operator / Coil voltage[1]
39	12V 50Hz
43	24V 50Hz
44	48V 50Hz
45	12V DC
49	24V DC
53	110V 50Hz
57	220V 50Hz
XX	Valve less solenoid operator

[1] Shaded part numbers are standard
Unshaded part numbers are available on request but will be subject to minimum order quantities
Otherwise order XX version and order solenoid separately.

Engineering level F

① Cyl to exhaust ports (CE)
② Press to cylinder ports (PC)

Main data for Directional control valves, B4 Series

	Symbol	Actuator	Return	Signal pressure min, bar at 6 bar actua./return	Changeover time, ms at 6 bar actua./return	Weight Kg	Voltage	Order code	Qty
Pneumatically actuated 3/2 valves									
		Air	Differential air	1,5/-	34/45	0,163		**B4K6000XXF**	1
		Air	Spring return	3,0/-	32/48	0,16		**B4U6000XXF**	1
		Air	Air	1,5/1,5	15/17	0,177		**B4M6000XXF**	1
Pneumatically actuated 5/2 and 5/3 valves									
		Air	Differential air	1,5/-	34/45	0,184		**B436000XXF**	1
		Air	Spring return	3,0/-	32/48	0,19		**B4P6000XXF**	1
		Air	Air	1,5/1,5	15/17	0,198		**B446000XXF**	1
	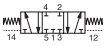	Air Closed centre position	Air Self centring	3,0/3,0	16/19	0,204		**B486000XXF**	1
	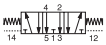	Air Vented centre position	Air Self centring	3,0/3,0	16/19	0,204		**B496000XXF**	1
	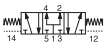	Air Pressurised centre position	Air Self centring	3,0/3,0	16/19	0,204		**B406000XXF**	1
Electrically actuated 3/2 valves									
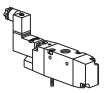		Electric	Differential air	1,5/-	34/45	0,206 0,157	24 VDC Less solenoid	**B4G6AB549F** **B4G6AXXXXF**	1 1
		Electric	Spring return	3,0/-	36/40	0,210 0,161	24 VDC Less solenoid	**B4R6AB549F** **B4R6AXXXXF**	1 1
		Electric	Air	1,5/1,5	15/17	0,220 0,170	24 VDC Less solenoid	**B4S6AB549F** **B4S6AXXXXF**	1 1
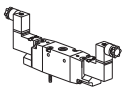		Electric	Electric	1,5/1/5	15/17	0,262 0,164	24 VDC Less solenoid	**B4J6AB549F** **B4J6AXXXXF**	1 1
Electrically actuated 5/2 valves									
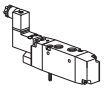		Electric Air	Differential Air	1,5/-	34/45	0,227 0,178	24 VDC Less solenoid	**B416AB549F** **B416AXXXXF**	1 1
		Electric Air	Spring return	3,0/-	36/40	0,227 0,178	24 VDC Less solenoid	**B4T6AB549F** **B4T6AXXXXF**	1 1
		Electric	Air	1,5/1/5	15/17	0,241 0,192	24 VDC Less solenoid	**B4A6AB549F** **B4A6AXXXXF**	1 1

Metal Spool Valves

	Symbol	Actuator	Return	Signal pressure min, bar at 6 bar actua./return	Changeover time, ms at 6 bar actua./return	Weight Kg	Voltage	Order code	Qty
Electrically actuated 52 and 5/3 valves									
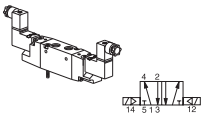		Electric	Electric	1,5/1,5	15/15	0,283 0,185	24 VDC Less solenoid	**B426AB549F** **B426AXXXXF**	1 1
	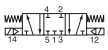	Electric Closed centre position	Electric Self centring	3,0/3,0	16/18	0,289 0,191	24 VDC Less solenoid	**B456AB549F** **B456AXXXXF**	1 1
	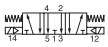	Electric Vented centre position	Electric Self centring	3,0/3,0	16/18	0,289 0,191	24 VDC Less solenoid	**B466AB549F** **B466AXXXXF**	1 1
		Electric Pressurised centre position	Electric Self centring	3,0/3,0	16/18	0,289 0,191	24 VDC Less solenoid	**B476AB549F** **B476AXXXXF**	1 1

Internal air supply to differential pilots and solenoids via port 1
Silencers and push-in fittings are shown on page 27.

Valves supplied with solenoid operators include standard P8C-D connector

Inlet Exhaust Manifolds for B4 series valves

Standard Base without Flow Controls

Each kit contains:
1 pcs Manifold Base
2 pcs Mounting screws and nuts
2 pcs Tie Rods
1 pcs Body-to-base Gasket and
1 pcs Base-to-Base Gasket

		Order code	Qty
Manifold Base Kit	**3/2 =**	**PS4548F**	1
	5/2 =	**PS4517F**	1

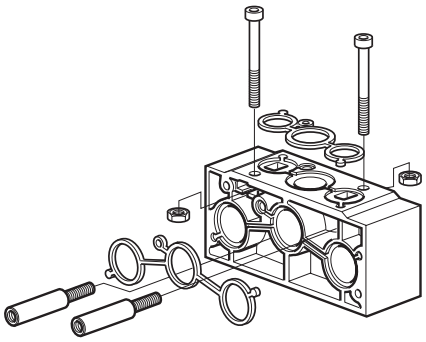

End plates

Standard End Plates may be used with either of above Manifold Bases

Each kit contains:
1 right and 1 left End Plate
3 pcs O-Rings
3 pcs Blanking Plugs
2 pcs Socket Head Cap Screws
2 pcs Flat Washers
2 pcs Lockwashers

	Port Size		Order code	Qty
Manifold End plate kit	3/8 BSP	**3/2 =**	**PS4551F**	1
	3/8 BSP	**5/2 =**	**PS4516F**	1

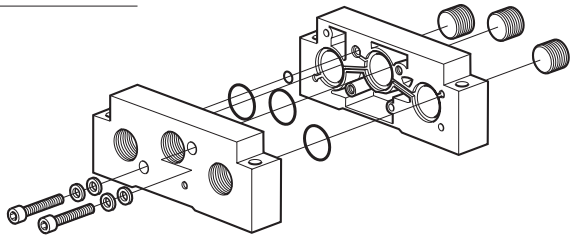

Isolator Plug Kit

Used to isolate the 1, 3 or 5 gallery between two Manifold Bases

Each kit contains:
3 pcs Isolator Plugs complete with O-rings

	Order code	Qty
Isolator Plug kit	**PS4519F**	1

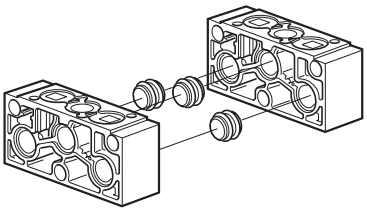

Manifold Blanking plate

Each kit contains:
1 pcs Cover Plate
2 pcs Mounting Screws
1 pcs Gasket
Used to blank off unused stations.

		Order code	Qty
Manifold Blanking plate	**3/2 =**	**PS4568F**	1
	5/2 =	**PS4569F**	1

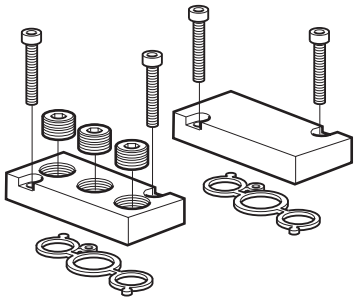

Dimensions, B4 Valve Series

3/2 Body ported
Single solenoid operated air spring return / spring return

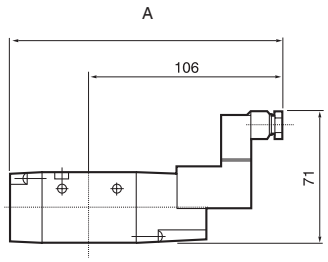

	Air differential return	Spring return
A	154,0	156,0

5/2 Body ported
Single solenoid operated air spring return / spring return

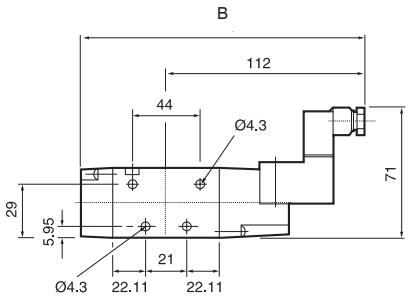

	Air differential return	Spring return
B	166,0	168,0

Single solenoid operated air pilot return

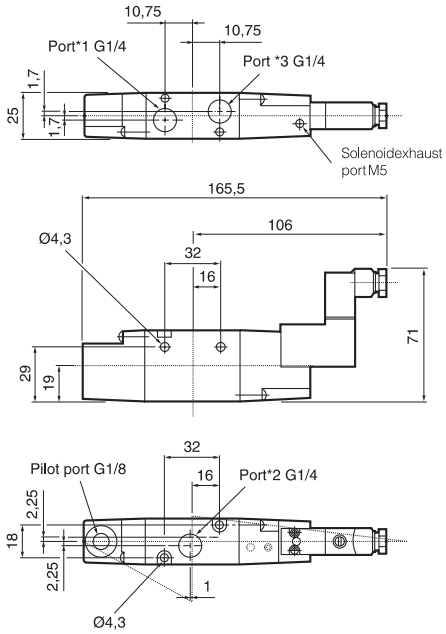

Single solenoid operated air pilot return

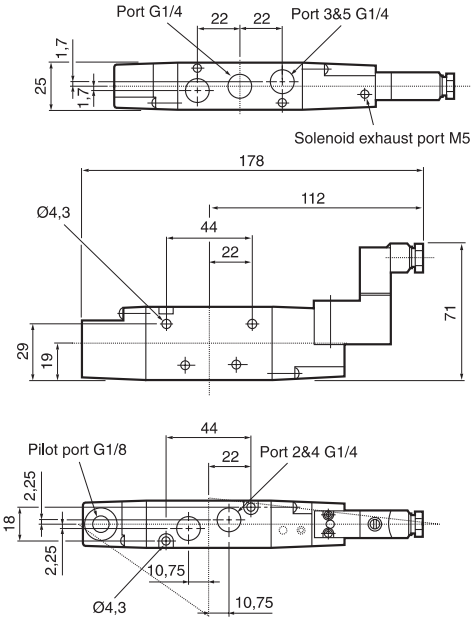

Double solenoid operated

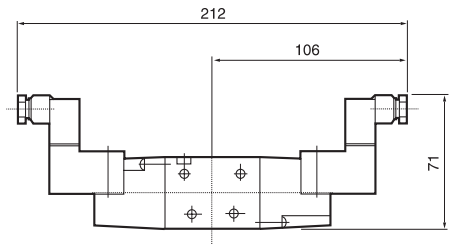

Double solenoid operated

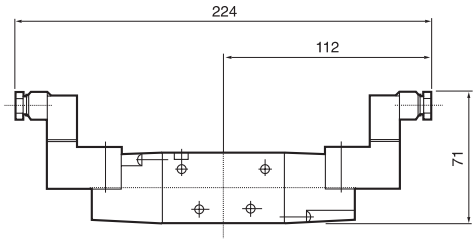

All dimensions in mm unless otherwise stated

Dimensions, B4 Valve Series

3/2 Body ported
Double air pilot operated

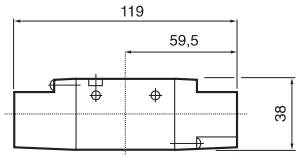

5/2 Body ported
Double air pilot operated

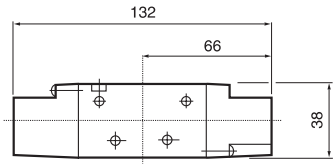

Air pilot operated air spring return / spring return

C

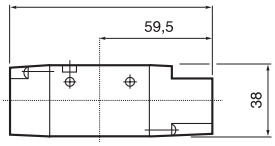

	Air differential return	Spring return
C	107,5	109,5

Air pilot operated air spring return / spring return

D

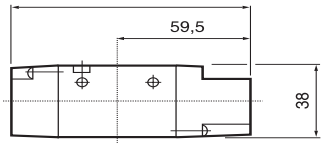

	Air differential return	Spring return
D	120,0	122,0

5/3 Body ported
Double air pilot return

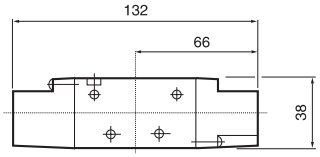

5/3 Body ported
Double solenoid operated

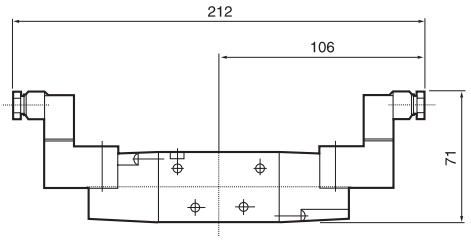

Manifolds - IEM Inlet Exhaust Manifold System

3/2 Inlet Exhaust Manifold
For B4 Body Ported Valves

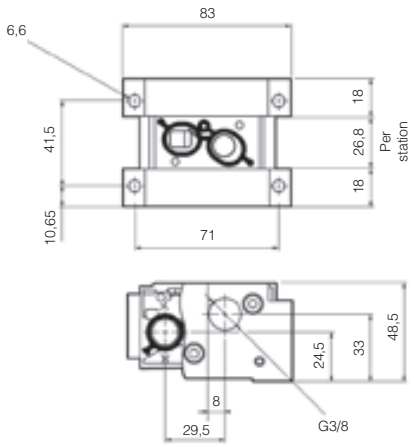

5/2 Inlet Exhaust Manifold
For B4 Body Ported Valves

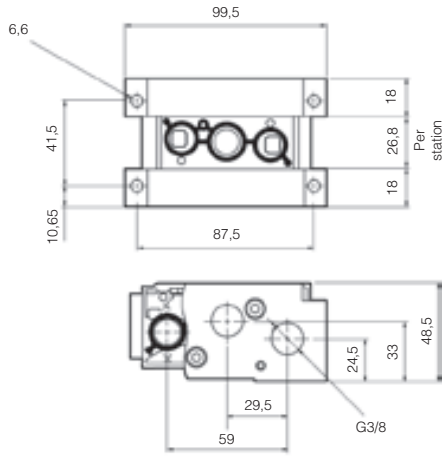

All dimensions in mm unless otherwise stated

Metal Spool Valves

B5

- G1/4 ports, 3/2, 5/2 and 5/3 functions
- Inlet-exhaust manifold facility
- Integral mounting holes
- 5 watt solenoid actuators
- EN175301-803 Industrial Form B connector



Operating information

Working pressure	Max 10 bar	Flow (3/2) and (5/2) (acc. to ISO 6358)	Qn = 24 l/s
Working temperature;			Q max = 37 l/s
Pneumatically actuated	-10°C to +60°C		Cv = 1,4
Electrically actuated	-10°C to +50°C		

B	5	2	6	B	C	B	49	C

	Basic series
B5	Ported valve

	Port size
6	G1/4

Pilot source / Pilot exhaust	
B	Port 1 / Vented / Side

Operator function		
3 Port		
J		3/2 Double solenoid
V		3/2 N/C Single solenoid - air return / spring assist
5 Port		
2		5/2 Double solenoid
5		5/3 Double solenoid - all ports blocked (APB)
6		5/3 Double solenoid - cyl to exhaust ports (CE)
7		5/3 Double solenoid - press to cylinder ports (PC)
E		5/2 Single solenoid - air return / spring assist

	Solenoid overrides / Lights
C	Locking, flush without light
X	None

	Solenoid Enclosures
B	22mm Industrial Form B
N	Valve less 22mm solenoid coil
X	None

	Pilot operator / Coil voltage[1]
43	24V 50Hz
45	12V DC
49	24V DC
53	110V 50Hz
57	220V 50Hz
XX	Valve less solenoid operator

[1] Shaded part numbers are standard
Unshaded part numbers are available on request but will be subject to minimum order quantities
Otherwise order XX version and order solenoid coil separately.

Shaded part numbers are standard

Engineering level C

Tel: +45 63 12 83 00 | Email: ps@hymatik.com | www.hymatik.com | Hvidkaervej 27a, DK-5250 Odense SV, Denmark

Main data for Directional control valves, B5 Series (G1/4 threaded ports)

Symbol	Actuator	Return	Signal pressure min, bar at 6 bar actua./return	Changeover time, ms at 6 bar actua./return	Weight Kg	Voltage	Order code	Qty
Electrically actuated 3/2 valves								
	Electric	Air/Spring Assisted	2,4/2,4	24/26		24 VDC Less solenoid coil	**B5V6BCB49C** **B5V6BCNXXC**	1 1
	Electric	Electric	1,5/1/5	15/17		24 VDC Less solenoid coil	**B5J6BCB49C** **B5J6BCNXXC**	1 1
Electrically actuated 5/2 valves								
	Electric	Air/Spring Assisted	2,4/2,4	24/26		24 VDC Less solenoid coil	**B5E6BCB49C** **B5E6BCNXXC**	1 1
Electrically actuated 5/2 valves								
	Electric	Electric	1,5/1,5	15/15	0,283 0,185	24 VDC Less solenoid	**B526BCB49C** **B526BCNXXC**	1 1
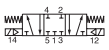	Electric Closed centre position	Electric Self centring	3,0/3,0	16/18	0,289 0,191	24 VDC Less solenoid	**B556BCB49C** **B556BCNXXC**	1 1
	Electric Vented centre position	Electric Self centring	3,0/3,0	16/18	0,289 0,191	24 VDC Less solenoid	**B566BCB49C** **B566BCNXXC**	1 1
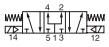	Electric Pressurised centre position	Electric Self centring	3,0/3,0	16/18	0,289 0,191	24 VDC Less solenoid	**B576BCB49C** **B576BCNXXC**	1 1

Order solenoid connectors separately, see page 25 for part numbers.

Internal air supply to differential pilots and solenoids via port 1
Silencers and push-in fittings are shown on page 27.

Inlet Exhaust Manifolds for B5 series valves

Standard Base without Flow Controls

Each kit contains:
1 pcs Manifold Base
2 pcs Mounting screws and nuts
2 pcs Tie Rods
1 pcs Body-to-base Gasket and
1 pcs Base-to-Base Gasket

	Order code	Qty
Manifold Base Kit	**PS2817P**	1

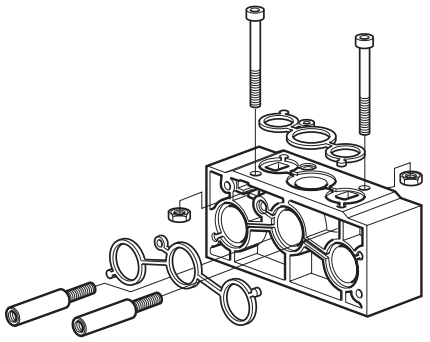

End plates

Standard End Plates may be used with either of above Manifold Bases

Each kit contains:
1 right and 1 left End Plate
3 pcs O-Rings
3 pcs Blanking Plugs
2 pcs Socket Head Cap Screws
2 pcs Flat Washers
2 pcs Lockwashers

	Port Size	Order code	Qty
Manifold End plate kit	G3/8	**PS2815P**	1

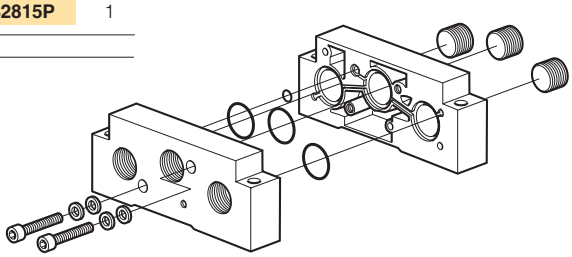

Isolator Plug Kit

Used to isolate the 1, 3 or 5 gallery between two Manifold Bases

Each kit contains:
3 pcs Isolator Plugs complete with O-rings

	Order code	Qty
Isolator Plug kit	**PS2819P**	1

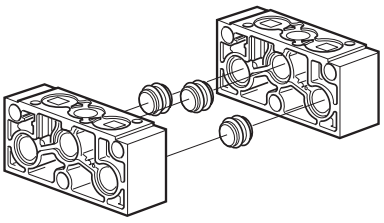

Manifold Blanking plate

Each kit contains:
1 pcs Cover Plate
2 pcs Mounting Screws
1 pcs Gasket
Used to blank off unused stations.

	Order code	Qty
Manifold Blanking plate	**PS2869P**	1

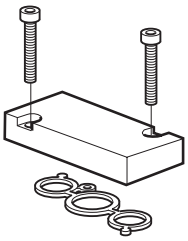

Dimensions, B5 Valve Series

3/2 Body ported
Single solenoid operated air spring return / spring return

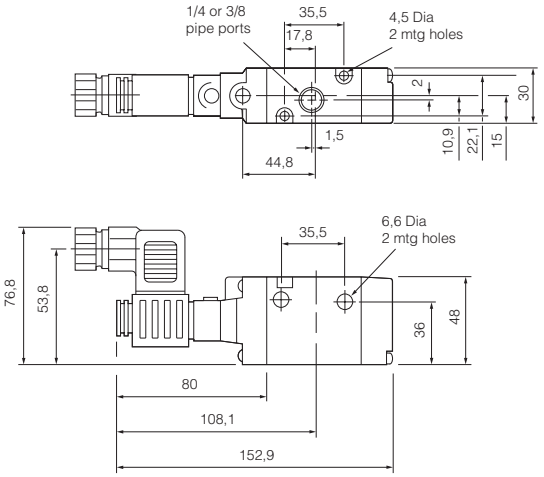

5/2 and 5/3 Body ported
Single solenoid operated air spring return / spring return

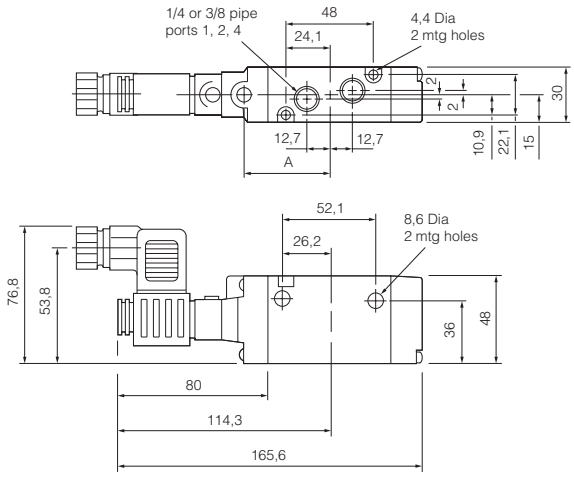

	2 Position	3 Position
A	51,1	62,7

Double solenoid operated

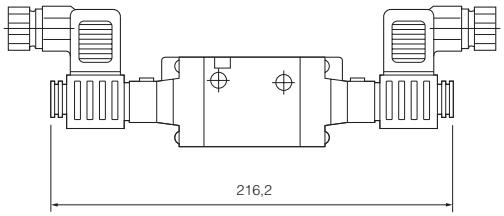

Double solenoid operated

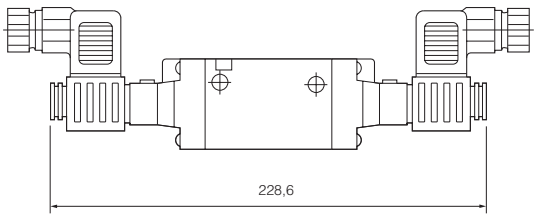

All dimensions in mm unless otherwise stated

Tel: +45 63 12 83 00 | Email: ps@hymatik.com | www.hymatik.com | Hvidkaervej 27a, DK-5250 Odense SV, Denmark

Manifolds - IEM Inlet Exhaust Manifold System

5/2 Inlet Exhaust Manifold
For B5 Body Ported Valves

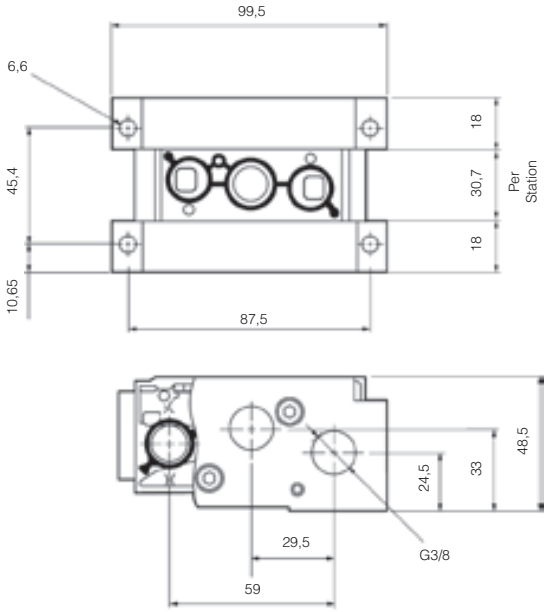

All dimensions in mm unless otherwise stated

Tel: +45 63 12 83 00 | Email: ps@hymatik.com | www.hymatik.com | Hvidkaervej 27a, DK-5250 Odense SV, Denmark

Solenoid Valve Options

Valve supplied without solenoids

B3 and B4 valves are designed to accept 15mm solenoid operator / connector CECC/EN 175301-803 Form C/ISO 15217. Solenoid operated valves may be ordered without the solenoid operator and connector by substituting XXXX in positions 6 to 9 of the part number. Example B3T5BXXXXH is part number for 5/2 Single solenoid operated spring return valve without solenoid operator and standard connector. See Fig 1.



Fig 1.

B5 valves are designed to accept 22mm solenoid operator/connector EN175301-803 Industrial Form B. Solenoid valves may be ordered without the coil and connector and are supplied with the solenoid operator fitted to the valve. See Fig 2.
Example B5E6BCNXXC is part number for 5/2 Single solenoid operated valve fitted with the solenoid operator having flush locking M/O without coils and connectors.



Fig 2.

15mm Solenoid Operators for B3 and B4 Valves

Electrical connection EN 175302-803 C/ISO15217 (Ex DIN 43650C)

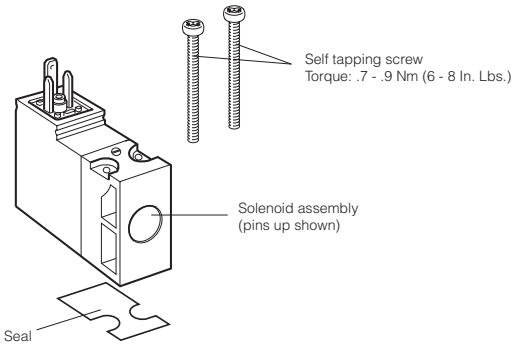

Solenoids 15mm NC, standard

(**Note!** Mounting screws included with basic valve)

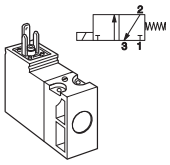

Voltage	Weight Kg	Order code Without manual override		Weight Kg	Order code Override, blue, non locking flush		Weight Kg	Order code Override, yellow, locking flush	
12 VDC	0,038	**P2E-KV32B0**	Ⓛ	0,038	**P2E-KV32B1**	Ⓛ	0,038	**P2E-KV32B2**	Ⓛ
24 VDC	0,038	**P2E-KV32C0**	Ⓛ	0,038	**P2E-KV32C1**	Ⓛ	0,038	**P2E-KV32C2**	Ⓛ
48 VDC	0,038	**P2E-KV32D0**	Ⓛ	0,038	**P2E-KV32D1**	Ⓛ	0,038	**P2E-KV32D2**	Ⓛ
24 VAC 50Hz	0,038	**P2E-KV31C0**	Ⓛ	0,038	**P2E-KV31C1**	Ⓛ	0,038	**P2E-KV31C2**	Ⓛ
48 VAC 50/60Hz	0,038	**P2E-KV34D0**	Ⓛ	0,038	**P2E-KV34D1**	Ⓛ	0,038	**P2E-KV34D2**	Ⓛ
115 VAC 50Hz 120 VAC 60Hz	0,038	**P2E-KV31F0**	Ⓛ	0,038	**P2E-KV31F1**	Ⓛ	0,038	**P2E-KV31F2**	Ⓛ
230 VAC 50Hz 240 VAC 60Hz	0,038	**P2E-KV31J0**	Ⓛ	0,038	**P2E-KV31J1**	Ⓛ	0,038	**P2E-KV31J2**	Ⓛ

Solenoid coils for B5 valves

Solenoid coils to suit 'N' enclosure type 22mm 3-Pin EN 175301-803 Industrial Form B

Coil Voltage	Order code	Weight (kg)
24 VAC	**P2FCB442**	0.093
12 VDC	**P2FCB445**	0.093
24 VDC	**P2FCB449**	0.093
110 VAC	**P2FCB453**	0.093
230 VAC	**P2FCB457**	0.093

Spare solenoid nuts

Valves with vented exhaust are fitted with diffuser plastic nut



	Order code
	P2FND

Solenoid Operator Kit for B5 valves

Each kit contains:
1 large 'O' ring for operator base
1 small 'O' ring for operator base
2 mounting screws

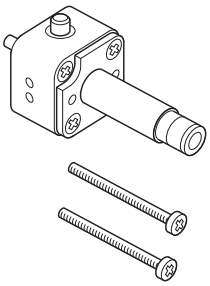

	Order code	Weight (kg)	Qty
Non locking m/o	**P2FP13N4D**	0.04	1
Locking m/o	**P2FP13N4C**	0.04	1

Solenoid Connectors / Cable Plugs EN175301-803

	Description	Order code 15mm Form C/ISO15217 Suitable for B3 & B4 valves	Order code 22mm Industrial Form B Suitable for B5 valves
With large headed screw suitable for mounting in inaccessible or recess position 	Standard IP65	**P8C-C**	
	24V DC LED and protection IP65	**P8C-C26C**	
	110V AC LED and protection IP65	**P8C-C21E**	
With standard screw 	Standard IP65 without flying lead	**P8C-D**	**3EV10V10**
	With LED and protection 24V AC/DC	**P8C-D26C**	**3EV10V20-24**
	With LED and protection 110V AC	**P8C-D21E**	**3EV10V20-110**
	With LED and protection 230V AC		**3EV10V20-230**
With cable 	Standard with 2m cable IP65	**P8L-C2**	
	Standard with 5m cable IP65	**P8L-C5**	
	24V AC/DC, 2m cable LED and protection IP65	**P8L-C226C**	
	24V AC/DC, 5m cable LED and protection IP65	**P8L-C526C**	**3EV10V20-24L5**
	24V AC/DC, 10m cable LED and protection IP65	**P8L-CA26C**	
	110V AC/DC, 2m cable LED and protection IP65	**P8L-C221E**	
	110V AC/DC, 5m cable LED and protection IP65	**P8L-C521E**	**3EV10V20-110L5**
	230V AC, 5m cable LED and protection IP65		**3EV10V20-230L5**

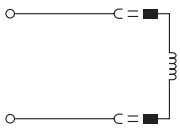

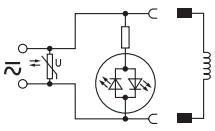

P8C-C
P8C-D
P8L-C2
P8L-C5
3EV10V10
3EV290V10

P8C-D26C	**P8L-C226C**
P8C-D21E	**P8L-C526C**
P8C-C26C	**P8L-CA26C**
P8C-C21E	**P8L-C221E**
	P8L-C521E
3EV10V20-24	**3EV10V20-24L5**
3EV10V20-110	**3EV10V20-110L5**
3EV10V20-230	**3EV10V20-230L5**

Cable Plug Dimensions (mm)

Solenoid valves P2E-•V...

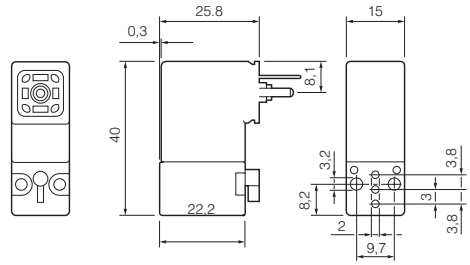

Cable plugs form C / ISO 15217 for B3 & B4 valves

P8C-C
P8C-C26C
P8C-C21E
P8C-D
P8C-D26C
P8C-D21E

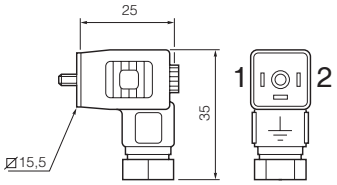

Cable plugs form C / ISO 15217 with cables for B3 & B4 valves

P8L-C2
P8LC5
P8L-C226C
P8L-C526C
P8L-CA26C
P8L-C221E
P8L-C521E

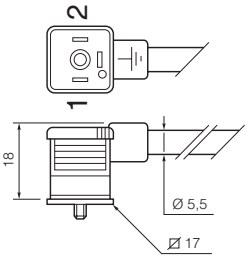

Cable plugs Form B for B5 valves

3EV10V10

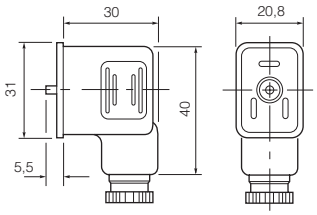

Accessories, Service and Replacement Parts

Silencers

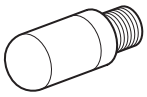

Port	Ordercode	Pack Qty
M5	P6M-PAC5	10
G1/8	P6M-PAB1	10
G1/4	P6M-PAB2	10

Fittings

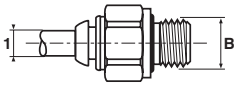

Male straight connectors - Parallel thread

Tube dia 1	Thread B	Ordercode	Box Qty
4	M5 x 0.8	F8PMB4M5	30
6	M5 x 0.8	F8PMB6M5	20
4	G1/8	F4PMB4-1/8	20
6	G1/8	F4PMB6-1/8	30
8	G1/8	F4PMB8-1/8	40
6	G1/4	F4PMB6-1/4	30
8	G1/4	F4PB8-1/4	30
10	G1/4	F4PB10-1/4	20
12	G1/4	F4PB12-1/4	10

Accessories, Services and Replacement Parts B Series

B3,B4 and B5 Spool/Body repair kits contain:

Spool
Spool seals
Lip seal – operator pistons
Gaskets
Spool springs
Grease packet

B3 series valves

3/2 solenoid and remote air pilot operated valves -Spool/Body Repair kit	**PS2971F**
5/2 solenoid and remote air pilot operated valves -Spool/Body Repair kit	**PS2901F**
5/3 APB solenoid and remote pilot operated valves - Spool/Body Repair kit	**PS2902F**

Manifold gasket kits

3/2 IEM Gasket kit (10 valve/manifold gaskets)	**PS2980F**
5/2 IEM Gasket kit (10 valve/manifold gaskets)	**PS2981F**

B4 series valves

3/2 solenoid and remote air pilot operated valves - Spool/Body Repair kit	**PS4571F**
5/2 solenoid and remote air pilot operated valves - Spool/Body Repair kit	**PS4501F**
5/3 solenoid and remote pilot operated valves – APB Spool/Body Repair kit	**PS4502F**
5/3 solenoid and remote pilot operated valves – CE Spool/Body repair kit	**PS4503F**
5/3 solenoid and remote pilot operated valves – PC Spool/Body repair kit	**PS4504F**

Manifold gasket Kits.

3/2 IEM Gasket Kit (10 valve/manifold gaskets)	**PS4580F**
5/2 IEM Gasket Kit (10 valve/manifold gaskets)	**PS4581F**

B5 series valves

3/2 solenoid and remote air pilot operated valves - Spool/Body Repair kit	**PS2871P**
5/2 solenoid and remote air pilot operated valves - Spool/Body Repair kit	**PS2801P**
5/3 solenoid and remote pilot operated valves – APB Spool/Body Repair kit	**PS2802P**
5/3 solenoid and remote pilot operated valves – CE Spool/Body repair kit	**PS 2803P**
5/3 solenoid and remote pilot operated valves – PC Spool/Body repair kit	**PS2804P**

Manifold gasket Kits.

3/2 & 5/2 IEM Gasket kit PS2884P (10 valve/manifold gaskets)	**PS2884P**

Solenoid coils for B5 valves

Solenoid coils to suit 'N' enclosure type 22mm 3-Pin Industrial Form B

Coil Voltage	Order code	Weight (kg)
24VAC	**P2FCB442**	0.093
12VDC	**P2FCB445**	0.093
24VDC	**P2FCB449**	0.093
110VAC	**P2FCB453**	0.093
230VAC	**P2FCB457**	0.093

Solenoid operator kit

Each kit contains:
1 Large 'O'ring for operator base
1 Small 'O' ring for operator base

	Order code	Qty
Non locking m/o	**P2FP13N4D**	1
Locking m/o	**P2FP13N4C**	1

Parker Worldwide

AE – UAE, Dubai
Tel: +971 4 8875600
parker.me@parker.com

AR – Argentina, Buenos Aires
Tel: +54 3327 44 4129

AT – Austria, Wiener Neustadt
Tel: +43 (0)2622 23501-0
parker.austria@parker.com

AT – Eastern Europe,
Wiener Neustadt
Tel: +43 (0)2622 23501 970
parker.easteurope@parker.com

AU – Australia, Castle Hill
Tel: +61 (0)2-9634 7777

AZ – Azerbaijan, Baku
Tel: +994 50 2233 458
parker.azerbaijan@parker.com

BE/LX – Belgium, Nivelles
Tel: +32 (0)67 280 900
parker.belgium@parker.com

BR – Brazil, Cachoeirinha RS
Tel: +55 51 3470 9144

BY – Belarus, Minsk
Tel: +375 17 209 9399
parker.belarus@parker.com

CA – Canada, Milton, Ontario
Tel: +1 905 693 3000

CH – Switzerland, Etoy
Tel: +41 (0) 21 821 02 30
parker.switzerland@parker.com

CN – China, Shanghai
Tel: +86 21 5031 2525

CZ – Czech Republic, Klecany
Tel: +420 284 083 111
parker.czechrepublic@parker.com

DE – Germany, Kaarst
Tel: +49 (0)2131 4016 0
parker.germany@parker.com

DK – Denmark, Ballerup
Tel: +45 43 56 04 00
parker.denmark@parker.com

ES – Spain, Madrid
Tel: +34 902 33 00 01
parker.spain@parker.com

FI – Finland, Vantaa
Tel: +358 (0)20 753 2500
parker.finland@parker.com

FR – France, Contamine s/Arve
Tel: +33 (0)4 50 25 80 25
parker.france@parker.com

GR – Greece, Athens
Tel: +30 210 933 6450
parker.greece@parker.com

HK – Hong Kong
Tel: +852 2428 8008

HU – Hungary, Budapest
Tel: +36 1 220 4155
parker.hungary@parker.com

IE – Ireland, Dublin
Tel: +353 (0)1 466 6370
parker.ireland@parker.com

IN – India, Mumbai
Tel: +91 22 6513 7081-85

IT – Italy, Corsico (MI)
Tel: +39 02 45 19 21
parker.italy@parker.com

JP – Japan, Fujisawa
Tel: +(81) 4 6635 3050

KR – South Korea, Seoul
Tel: +82 2 559 0400

KZ – Kazakhstan, Almaty
Tel: +7 7272 505 800
parker.easteurope@parker.com

LV – Latvia, Riga
Tel: +371 6 745 2601
parker.latvia@parker.com

MX – Mexico, Apodaca
Tel: +52 81 8156 6000

MY – Malaysia, Subang Jaya
Tel: +60 3 5638 1476

NL – The Netherlands,
Oldenzaal
Tel: +31 (0)541 585 000
parker.nl@parker.com

NO – Norway, Ski
Tel: +47 64 91 10 00
parker.norway@parker.com

NZ – New Zealand, Mt Wellington
Tel: +64 9 574 1744

PL – Poland, Warsaw
Tel: +48 (0)22 573 24 00
parker.poland@parker.com

PT – Portugal, Leca da Palmeira
Tel: +351 22 999 7360
parker.portugal@parker.com

RO – Romania, Bucharest
Tel: +40 21 252 1382
parker.romania@parker.com

RU – Russia, Moscow
Tel: +7 495 645-2156
parker.russia@parker.com

SE – Sweden, Spånga
Tel: +46 (0)8 59 79 50 00
parker.sweden@parker.com

SG – Singapore
Tel: +65 6887 6300

SK – Slovakia, Banská Bystrica
Tel: +421 484 162 252
parker.slovakia@parker.com

SL – Slovenia, Novo Mesto
Tel: +386 7 337 6650
parker.slovenia@parker.com

TH – Thailand, Bangkok
Tel: +662 717 8140

TR – Turkey, Istanbul
Tel: +90 216 4997081
parker.turkey@parker.com

TW – Taiwan, Taipei
Tel: +886 2 2298 8987

UA – Ukraine, Kiev
Tel +380 44 494 2731
parker.ukraine@parker.com

UK – United Kingdom,
Warwick
Tel: +44 (0)1926 317 878
parker.uk@parker.com

US – USA, Cleveland
Tel: +1 216 896 3000

VE – Venezuela, Caracas
Tel: +58 212 238 5422

ZA – South Africa,
Kempton Park
Tel: +27 (0)11 961 0700
parker.southafrica@parker.com

European Product Information Centre
Free phone: 00 800 27 27 5374
(from AT, BE, CH, CZ, DE, EE, ES, FI, FR, IE, IT, PT, SE, SK, UK)

© 2009 Parker Hannifin Corporation. All rights reserved.

Catalogue PDE2582TCUK-ca. Edition July 09

Parker Hannifin Ltd
Pneumatic Division Europe
The Collins Centre,
Lichfield South, Wall Island,
Birmingham Road, Lichfield.
WS14 0QP United Kingdom
Tel.: +44 (0) 1543 483800
Fax: +44 (0) 1543 483801
www.parker.com/euro_pneumatic

Your local authorized Parker distributor