hymatik

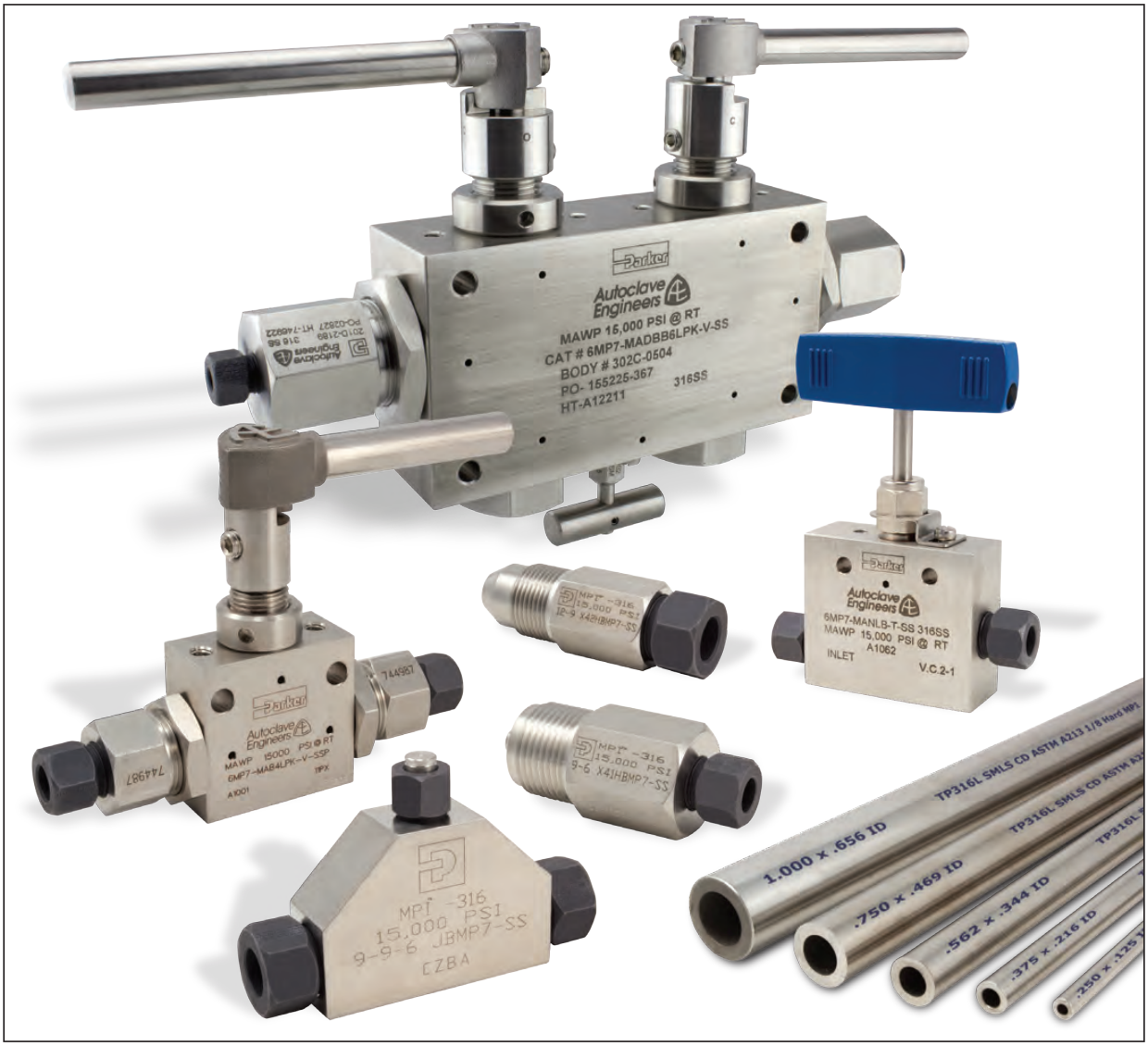

MPI™ Medium Pressure Products

Fittings, Adapters, and Valves
Pressures to 15,000 PSI

Catalog 4234-MA

January 2018

aerospace
climate control
electromechanical
filtration
fluid & gas handling
hydraulics
pneumatics
process control
sealing & shielding

Parker

ENGINEERING YOUR SUCCESS.

Tel: +45 63 12 83 00 | Email: ps@hymatik.com | www.hymatik.com | Hvidkaervej 27a, DK-5250 Odense SV, Denmark

MPI™ Medium Pressure Products

Table of Contents

Introduction 3

Visual Index 4

MPI™ Fittings

Typical Raw Materials 8
Tube End Dimension Data 8
How To Order 8
Tubing Selection Guide 9
Temperature Derating Factors 9
Maximum Allowable Working Pressure Tables 10
MPI™ 316/316L Stainless Steel Tubing (15,000 psi) 10
Cone & Thread Tubing 10
Instrumentation Grade Heavy Wall Tubing 10
Super Duplex MPI™ Tubing 11
Instrument Grade Nominal Wall 2507 Tubing 11

Medium Pressure Fittings

Medium Pressure Fittings 12

Medium Pressure Valves

MAN Series Needle Valves 35
Basic Repair Kits 37
How to Order MAN Series Needle Valves 37
Two Way Inline Valves 38
Two Way Angle Valves 38
Three Way/Two On-Pressure Valves 39
Three Way/One On-Pressure Valves 39
Three Way/Two Stem Manifold Style Valves 40
Two Way Angle Valves (Replaceable Seat) 40
MAN Series Actuators - Pneumatic, Piston Style 41
MAN Series Actuators - Electric Flow Regulating 46
MADBN Series Double Block & Bleed Needle Valve 48
MAGV Series Single Block & Bleed Gauge Valve 50
MABV Series Bleed Valve 51
MAB Series 2-Way Ball Valve 54
MAB Series 3-Way Ball Valve 56
How to Order MAB Series Ball Valves 53
MADBB Double Block and Bleed Ball Valves 58
How to Order MADBB Series Ball Valves 60
Ball Valves: MAB Series Actuators 61
MAF Series Dual Disc Inline Filters 70
MAFC Series Cup Style Inline Filter 71
MAC O-Ring and MACB Series Ball Style Check Valves 72
MARA Series Metal Seat Relief Valve (Factory Set) 73
MARSA Series Soft Seat Relief Valve (Factory Set) 75

Technical Information

Assembly Instructions 78
Gaugeability Instructions 78
Remake Instructions 78
Gap Gauge 78
MPI™ Hydraulic Preset Tools 79
Port Dimensions for Parker X44™ Adapter 81

Part Number Crossover Reference Chart 82

Offer of Sale and Warranty 90



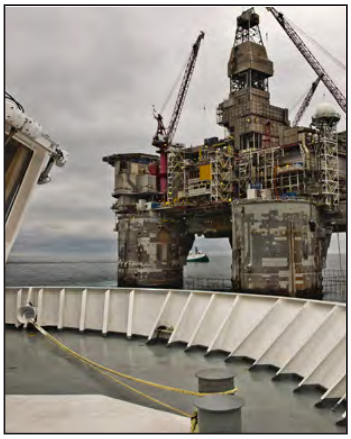

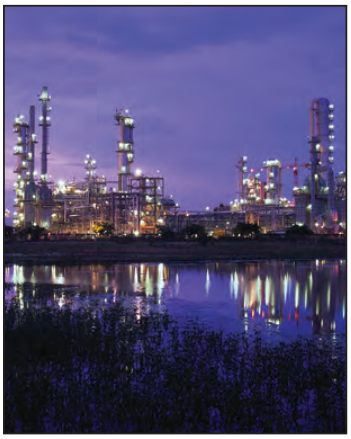

Note: Selections "**F**" for NPT Valves and "**MF**" for Medium Pressure Cone and Thread Valves are no longer included in the MPI catalog and can now be found in the Parker Autoclave Engineers Catalog: *P Series NPT Valve* and *SM Series Valve* brochures.

Tel: +45 63 12 83 00 | Email: ps@hymatik.com | www.hymatik.com | Hvidkaervej 27a, DK-5250 Odense SV, Denmark

Introduction

Parker Hannifin MPI™ connections are engineered and manufactured to be secure and gas-tight while being made manually (wrench turns) or hydraulically using a set tool. This connection has application throughout industry, including off-shore oil and gas exploration platforms, research labs, and other facilities that require operating pressures to 15,000 psi.

MPI™ Fittings are ideally suited to handle liquids, gases, or chemicals and can be used on a wide variety of tubing materials including: Instrument Grade thick-walled annealed 316 SS, 1/8th Hard (cold drawn) 316 SS MPI tubing, and 2507 Super Duplex MPI tubing. Every Parker MPI™ Fitting is supplied complete with both ferrules and compression gland nut, ready to install.

Advanced Features

Every MPI™ Fitting has the features shown below:

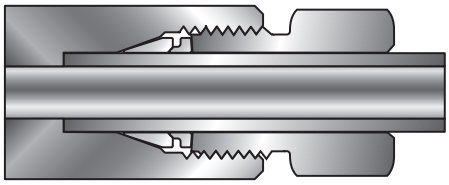

1. Front ferrule with corrosion-resistant Parker Suparcase® forms a seal between the tube, body and ferrule. It also provides a mechanical hold on the tube.
2. Back ferrule with corrosion-resistant Parker Suparcase® provides a strong mechanical hold on the tube.
3. Longer thread area for improved resistance to pressure and load on the ferrules.
4. Molybdenum disulfide-coated inverted nut helps prevent galling, provides easier assembly, and permits multiple remakes.
5. Long tube-support area improves resistance to vibration and line loads.

Materials and Identification

Standard MPI™ Fittings and Valves are made of Heat Code Traceable 316 SS or optional 2507 Super Duplex materials. Tubing and fitting materials should be selected based on compatibility with the fluid or gas media.

Part numbers for MPI™ Fittings use symbols that identify their style, size, and composition. 2507 material is easily identified by a groove in the gland nut hex.



MPI™ Fittings Pressure Ratings

The maximum pressure rating is marked on each fitting. MPI™ working pressures to be determined by selected tubing. Please see tables on pages 10 and 11 for specific working pressures.

- Size 4 (1/4") MPI™ – to 15,000 psi
- Size 6 (3.8") MPI™ – to 15,000 psi
- Size 8 (1/2") MPI™ – to 15,000 psi
- Size 9 (9/16") MPI™ – to 15,000 psi
- Size 12 (3/4") MPI™ – to 15,000 psi
- Size 16 (1") MPI™ – to 12,500 psi using 316 SS MPI tubing, 15,000 psi using MPI 2507 Super Duplex tubing with -**XF** Ferrule Option

Note: Tube and pipe thread sizes are designated by the number of sixteenths of an inch (1/4" tube = 4/16" or 4). See "How to Order" on page 8 for additional information.

Assembly

MPI™ Fittings are assembled with standard hand tools up to 3/4" size. 1-1/2 turns past finger tight is all that is needed, (3/4" and 1" sizes on 2507 Super Duplex tubing must be hydraulically set). All sizes can be preset with a Parker Hydraulic Preset Tool.

Dedication to Quality

Our resources and vast product line are available through our worldwide distribution network. For more information regarding our products and services, please contact your authorized Parker Instrumentation Distributor.



Tel: +45 63 12 83 00 | Email: ps@hymatik.com | www.hymatik.com | Hvidkaervej 27a, DK-5250 Odense SV, Denmark

MPI™ Medium Pressure Products

Visual Index

MPI™ Fittings



HBMP7
MPI™ Union Connector
Page 12



GBMP7
MPI™ to Female NPT Connector
Page12

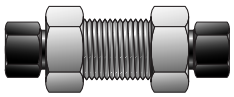

WBMP7
MPI™ Bulkhead Union Connector
Page 13

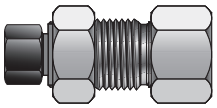

GH2BMP7
MPI™ Bulkhead to Female NPT
Page 13



EBMP7
MPI™ Union Elbow
Page 14



NBMP7
45° MPI™ Union Elbow
Page 14



JBMP7
MPI™ Union Tee
Page 15



OBMP7
MPI™ to NPT Female Branch Tee
Page16

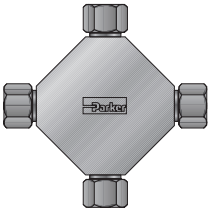

KBMP7
MPI™ Union Cross
Page 16

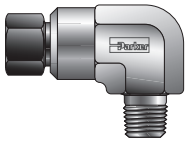

CBMP7
MPI™ to Male NPT Elbow
Page 17

MPI™ Fittings

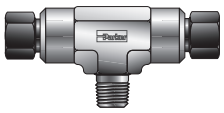

SBMP7
MPI™ to NPT Male Branch Tee
Page 17

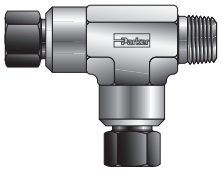

RBMP7
MPI™ to NPT Male Run Tee
Page 18



X42HBMP7
Medium Pressure to MPI™ Connector
Page 18



X41HBMP7
High Pressure to MPI™ Connector
Page 19



X44HBMP7
X44 Male by MPI™ Connector
Page 19



FBMP7
MPI™ Male Connector
Page 20



XHBMP7
37° Flare to MPI™ Connector
Page 20



MP7H2BX
37° Flare Bulkhead to MPI™ Connector
Page 21



MP7HBA
MPI™ to SAE Male O-ring Connector
Page 21

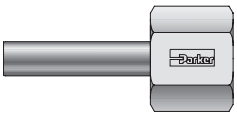

MF T7HG
MPI™ Tube Stub to Female NPT Pipe
Page 22



TRBMP7
MPI™ Tube Stub Reducer
Page 22

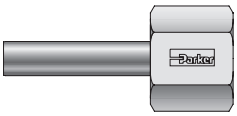

T7HG
MPI™ Tube Stub to Female NPT Pipe
Page 23

Tel: +45 63 12 83 00 | Email: ps@hymatik.com | www.hymatik.com | Hvidkaervej 27a, DK-5250 Odense SV, Denmark

Visual Index

MPI™ Fittings

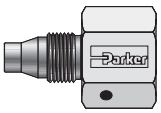

HF GM7
MPI™ Male End to High Pressure C&T Port
Page 24



GM7
MPI™ Male End to Female NPT
Page 24



T7HBT7
MPI™ Tube Port Connector
Page 25

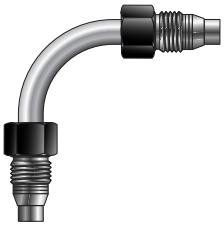

T7EBT7
MPI™ Tube Elbow
Page 26

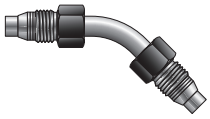

T7NBT7
45° MPI™ Tube Stub Elbow
Page 27



X42HT7
Medium Pressure to MPI™ Tube Stub
Page 28

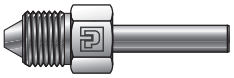

X41HT7
High Pressure to MPI™ Tube Stub
Page 28



X44HT7
X44 Male by MPI™ Tube Stub
Page 29

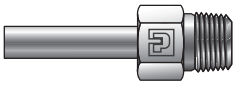

T7HF
MPI™ Tube Stub to Male NPT Pipe
Page 29

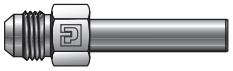

XHT7
37° Flare to MPI™ Tube Stub
Page 30

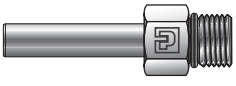

T7HOA
MPI™ Tube Stub to Male SAE O-ring
Page 30

MPI™ Fittings



M40HBMP7
Type “M” High Pressure Hose to MPI™ Connector
Page 31



M40HX44
Type “M” Male by X44 Male
Page 31

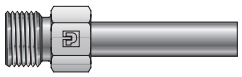

M40HT7
Type “M” High Pressure Hose Adapter to MPI™ Tube Stub
Page 32



MP7PC
MPI™ Port Connector
Page 32

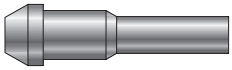

X47HT7
Medium Pressure Port Connector to MPI™ Tube Stub
Page 33



PNBMP7
MPI™ Cap
Page 33

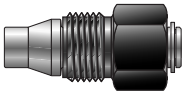

FNMP7
MPI™ Plug
Page 33

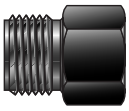

BMP7
MPI™ Nut
Page 34



MPBF
MPI™ Back Ferrule
Page 34



MPFF
MPI™ Front Ferrule
Page 34

Tel: +45 63 12 83 00 | Email: ps@hymatik.com | www.hymatik.com | Hvidkaervej 27a, DK-5250 Odense SV, Denmark

MPI™ Medium Pressure Products

Visual Index

MPI™ MAN Series Needle Valves (Replaces MPN Series Needle Valves)



MAN Series Two Way Inline Valves
Page 38



MAN Series Two Way Angle Valves
Page 38



MAN Series Three Way/Two On-Pressure Needle Valve
Page 39



MAN Series Three Way/ One On-Pressure Needle Valve
Page 39



MAN Series Three Way/Two Stem Manifold Needle Valve
Page 40

MPI™ Series Needle Valves & Actuators



MAN Series Two Way Angle Valves (Replaceable Seat)
Page 40



MAN Series Needle Valve Pneumatic Piston Actuators
Page 41

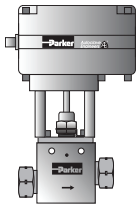

MAN Series Regulating Needle Valve Electric Flow Control Actuators
Page 46

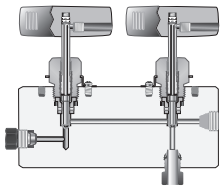

MADBN Series Double Block and Bleed Needle Valve
Page 48

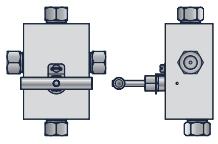

MAGV Series Single Block and Bleed Needle Valve
Page 50

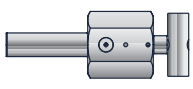

MABV Series Bleed Valves
Page 51

Visual Index

MPI™ MAB Series Ball Valves (Replaces MPB Series Ball Valves)

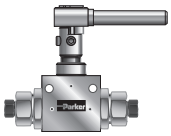

MAB Series
Two Way Ball Valves
Page 54



MAB Series
Three Way Ball Valves
Page 56

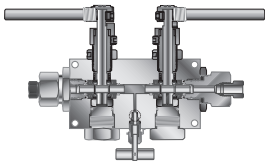

MADBB Series
Double Block & Bleed Ball Valve
Page 58

MPI™ Ball Valve Actuators



MAB Series Ball Valve Actuators
Pneumatic and Electric
Page 61

MPI™ Specialty Valves and Filters

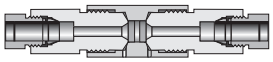

MAF Series
Dual Disc Line Filter
Page 70

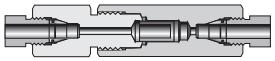

MAFC Series
Cup Line Filter
Page 71

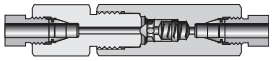

MAC & MACB Series
Ball Valve Check Valves
Page 72



MARA Series
Metal Seat Relief Valve
Page 73

MARSA Series
Soft Seat Relief Valve
Page 75

Visual Index

Technical Information



Gap Gauge
Page 78

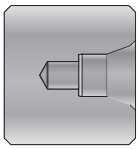

Hydraulic Preset Tools
316SS Tubing
Page 79

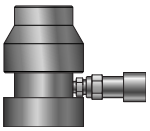

Hydraulic Preset Tools
2507 Tubing
Page 80

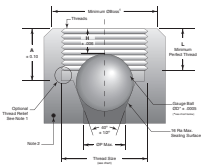

Port Dimensions: Parker X44
(Requires X44 Male Adapter to interface)
Page 81

Tel: +45 63 12 83 00 | Email: ps@hymatik.com | www.hymatik.com | Hvidkaervej 27a, DK-5250 Odense SV, Denmark

MPI™ Medium Pressure Products

Typical Raw Materials

Master Suffix	Basic Fitting Material	Straights	Shapes
-SS	Stainless Steel (Type 316)	ASME/ASTM SA/A-479 Type 316-SS ASTM A-276 Type 316 BS970 316-S31 DIN/EN 1.4401	ASME SA-182 316 BS970 316-S31 DIN/EN 1.4401
-2507	Super Duplex (Type 2507)	UNS S32750 ASME/ASTM SA/A-479 DIN/EN 1.4401	UNS S32750 ASME/ASTM SA/A-479 DIN/EN 1.4401

If additional information, including heat code traceability, is required, contact Parker Hannifin or your nearest MPI™ Fitting distributor.

Tube End Dimensional Data

Size No.	Inches						
	Tube O.D.	Straight Thread	C	D	E (orifice)	*L	W Hex
4	1/4	1/2 - 20	.50	1.34	.13	1.62	9/16
6	3/8	5/8 - 20	.63	1.58	.25	1.88	11/16
8	1/2	13/16 - 20	.69	1.85	.31	2.25	15/16
9	9/16	7/8 - 20	.75	1.91	.38	2.25	1
10	5/8	15/16-20	.75	2.02	.44	2.43	1 1/16
12	3/4	1 1/8 - 18	.88	2.26	.52	2.75	1 1/4
16	1	1 7/16 - 18	1.13	2.88	.69	3.38	1 1/2

***L** - Recommended Straight Length of Circular Un-bent tubing. Dimensions C and D are shown in the finger tight position. Dimensions in inches are for reference only, subject to change.

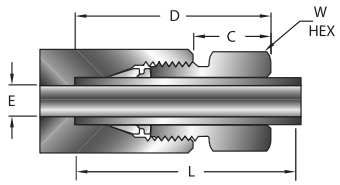

How To Order MPI™ Fittings

Dimensions in inches are for reference only, subject to change.

Parker MPI™ Fittings should be ordered using the part number as listed in this catalog.

Part numbers are developed as follows:

1. A combination of letters and numbers identifies the size and style of the fitting and the material used.
2. Tube and pipe thread sizes are designated by the number of sixteenths of an inch (1/4" tube = 4/16" or 4).

All standard MPI™ Fittings are manufactured from CW316 stainless steel as standard. 2507 Super Duplex Fittings and Valves can optionally be ordered by replacing "SS" ordering code with "2507".

Straights and Elbows: Specify MPI™ connection first or if inlet and outlet are both MPI™, specify largest connection size first.

Example:
Part number **4-4 HBMP7-SS** union made with 316 SS would have the specifications listed below.

4-4 HBMP7-SS



4	-	4	H	B	MP7	-	SS	- Options
1/4" Tube		1/4" Tube	Shape Designator, Union	Assembled with Nut and Ferrules	Medium Pressure Inverted		Stainless Steel	

Customer Requests: When special configurations are required, please contact your Parker Representative with application details for a custom quotation.

Tees:

Example:
Part number **9-6-6 JBMP7 -2507** union made from 2507 Super Duplex union would have the specifications listed below.

9-6-6 JBMP7-2507

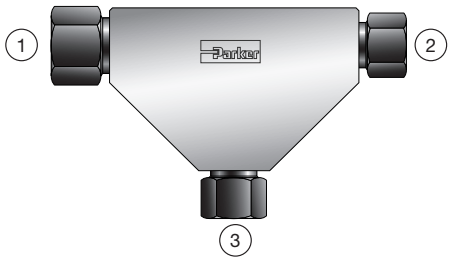

9	-	6	-	6	J	B	MP7	-	2507	- Options
9/16" Tube (1)		3/8" Tube (2)		3/8" Tube (3)	Shape Designate, Union Tee	Assembled with Nut and Ferrules	Medium Pressure Inverted		2507 Super Duplex	

To order "vented" (weep holes) MPI™ parts, add "**-VT**" to the end of the standard part number (e.g., 6-6 HBMP7-SS becomes 6-6 HBMP7-SS-VT).

Tel: +45 63 12 83 00 | Email: ps@hymatik.com | www.hymatik.com | Hvidkaervej 27a, DK-5250 Odense SV, Denmark

Tubing Selection Guide

Although Parker's MPI™ Fittings are engineered and manufactured to consistently provide high levels of reliability, no system's integrity is complete without considering the critical link: tubing.

This section is intended to help you properly select and order quality tubing, both annealed and medium-pressure cold drawn – 1/8 hard as well as 2507 Super Duplex materials.

Parker believes that proper tubing selection and installation are key to building leak-free, reliable tubing systems.

Parker's MPI™ Fittings have been designed to operate on a wide variety of "medium pressure" applications to 15,000 psi.

General Selection Criteria

The data tables in this section will help you select the tubing that best satisfies the flow (size) and material requirements of the application.

The most important consideration in the selection of suitable tubing for any application is the compatibility of the tubing materials with the media to be contained.

System Pressure

The system operating pressure is another important factor in determining the material strength and tubing wall thickness to be used.

In General, high pressure installations require strong materials such as Stainless Steel or Super Duplex to be employed. MPI™ tube fitting assemblies are limited to the lowest MAWP rated part in the fluid system - tubing, fitting or valve. "Periodic" testing of 1.5 times MAWP is allowed.

Temperature Derating Factors

Table 1 (top) indicates derating factors for both Annealed and 1/8th Hard (cold worked) 316SS and 317SS tubing. As indicated this material can be used from -425°F (-254°C) to 1000°F (538°C). **Table 1 (bottom)** indicates derating factors for our 2507 Super Duplex tubing which is designed for use from -50°F (-45°C) to 500°F (260°C).

Table 1	Temperature Derating Factors									
°F	-425º to 100º	200º	300º	400º	500º	600º	700º	800º	900º	1000º
°C	-254º to 538º	93º	149º	204º	260º	316º	371º	427º	482º	538º
1/8 Hard*	1.000	1.000	1.000	0.960	0.885	0.835	0.795	0.770	0.750	0.740
Annealed**	1.000	1.000	1.000	0.965	0.895	0.850	0.815	0.795	0.775	0.765

Super Duplex 2507	1.000	.90	.86	.82	.81	-	-	-	-	-

* Use with 1/8 Hard 316 tubing shown in Tables 2 (MPI) and 3 (C&T) on page 10.

** Use with Annealed 316 tubing shown in Table 4 on page 10.

The rating at temperature is the room temperature (RT) pressure rating listed in the catalog multiplied by the Derating Factor at temperature.
Example: 1/4" MPI™ fittings and tubing @ 800°F

Room Temperature Working Pressure
= **15,000** psi (as shown in Table 3)

800°F Temperature Derating Factor
= **.770** (1/8 Hard tube) (as shown above)

800°F Working Pressure
= 15,000 x .770 = 11,550 psi

Tel: +45 63 12 83 00 | Email: ps@hymatik.com | www.hymatik.com | Hvidkaervej 27a, DK-5250 Odense SV, Denmark

Parker MPI™ Medium Pressure Products

Maximum Allowable Working Pressure Tables

Tables 2, 3 and **4** list the maximum working pressure of various tubing sizes, according to material. Acceptable tubing diameters and wall thicknesses are those for which a rating is listed. O.D./I.D. combinations which do not have a pressure rating are not recommended for use with MPI™ Fittings.

MPI™ 316/317 Cold Drawn Stainless Steel Tubing

MPI™ tubing is marked "MPI" and is designed to provide optimum performance for MPI™ fittings. MPI™ tubing is nominal OD (± .003") 316 seamless stainless steel, cold drawn – 1/8 hard (cold drawn) tubing. Tensile strength is approximately 40% higher than annealed tubing.

Table 2 – 316 or 317 Stainless Steel (Seamless / Cold Drawn – 1/8 Hard for 15,000 psi MAWP applications)

Tube Size (in.)	Nominal OD (in.)	Nominal ID (in.)	Working Pressure (psi)	MPI™ Tube Part No.*
1/4	.250	.125	15,000	4-240 MPITube-SS-15K
3/8	.375	.219	15,000	6-240 MPITube-SS-15K
9/16	.562	.344	15,000	9-240 MPITube-SS-15K
3/4	.750	.469	15,000	12-240 MPITube-SS-15K
1	1.000	.656	12,500	16-240 MPITube-SS-12K

* To order 317 tube replace SS with 317

NOTES:
Sizes 3/4" & 1" MPI™ tubing require hydraulic presetting when used with MPI™ fittings.

Working pressures are calculated using an allowable stress of 35,000 psi for 1/8 hard 316 and 317 tubing with a minimum tensile strength of 105,000 psi.

Dimensions in inches are for reference only, subject to change.

316/316L Cold Drawn Stainless Steel Cone & Thread Tubing

Medium Pressure Cone & Thread (C&T) tubing is available as 1/8 hard 316 seamless stainless steel tubing and MPI™ is designed to work with existing C&T albeit to a pressure lower than marked on the tubing as C&T tubing is undersized by as much as .010" to fit the threading dies. MPI™ fittings work effectively with C&T tubing as listed below but **require hydraulic presetting** for optimum performance.

Table 3 – 316 Stainless Steel (Undersized OD, Seamless /Cold Drawn – 1/8 Hard)

Tube Size (in.)	Maximum OD (in.)	Nominal ID (in.)	Working Pressure (psi)	Parker Autoclave Part Number
1/4	.250	.109	12,500	MS15-092
3/8	.375	.203	12,500	MS15-093
9/16 (1)	.562	.312	12,500	MS15-085
9/16 (2)	.562	.359	10,000	MS15-097
3/4	.750	.516	10,000	MS15-098
1	1.000	.688	10,000	MS15-099

[1] Medium Pressure Tubing with .312" ID will be marked with 20,000 psi working pressure. Working pressure used with MPI fittings or valves is limited to pressure max in chart above.
[2] Medium Pressure Tubing with .359" ID will be marked with 15,000 psi working pressure. Working pressure used with MPI fittings or valves is limited to pressure max in chart above.

Instrumentation Grade Heavy Wall Tubing

Table 4 – 316 or 317 Stainless Steel (Seamless / Annealed)

Tube Size (in.)	Tube Wall Thickness (in.)								
	.065	.083	.095	.109	.120	.134	.156	.188	.220
	Working Pressure (psi)								
1/4	10,300	13,300	-	-	-	-	-	-	-
3/8	6,600	8,600	10,000	11,700	-	-	-	-	-
1/2	-	6,700	7,800	9,100	10,000	11,400	-	-	-
3/4	-	-	-	5,800	6,400	7,300	8,600	10,600	-
1	-	-	-	-	4,700	5,300	6,200	7,700	9,200

NOTE: Working pressures calculated using an allowable stress of 20,000 psi for annealed 316 stainless steel tubing with a nominal O.D. tolerance of ± .005".

Dimensions in inches are for reference only, subject to change.

Ordering Suggestion:
Fully annealed, high-quality type 316/316L stainless steel tubing ASTM A269 or A213, or equivalent. Hardness not to exceed 90 HRB. Tubing to be free of scratches, suitable for bending and flaring.

Tel: +45 63 12 83 00 | Email: ps@hymatik.com | www.hymatik.com | Hvidkaervej 27a, DK-5250 Odense SV, Denmark

MPI™ 2507 Super Duplex

Tubing is an engineered part of our total system "package" - the same as any of our components. Parker's 2507 MPI™ tubing is manufactured to a specialized and tightly controlled set of design specifications that make it different than that of standard "commercial" tubing. We have designed our products (Valves, Fittings, & Tubing) to work together as a complete system. Using Parker's MPI™ 2507 tubing in your system will gain you the following benefits:

- **Minimum PREN of 42**
  Offers an increased chloride corrosion resistance over standard ASTM A789 tube (PREN 38).
- **6% Greater Allowable Stress** [2]
  Allows the tube wall to be thinner without compromising pressure holding capability.
- **Up to 19% Weight Saving**
  Critical in offshore application where every pound counts. [3]
- **Optimized ID (inner diameter) with up to 43% Flow Area Increase** [2]
  Parker has maximized flow area and minimized pressure drop which allows for more consistent fluid dynamic calculations.[3]
- **Finite Tight Tolerance Tube** [2]
  Unlike standard ASTM A789 tubing where tolerance is based on percentage of wall thickness, Parker's MPI™ tubing offers a tolerance of ±0.003 regardless of size, for dimensional consistency from lot to lot.

Table 5 – MPI™ 2507 Seamless Tubing [1] For 15,000 psi Service

Tube Size (in.)	Nominal OD (in.)	Nominal ID (in.)	Working Pressure (psi)	MPI™ Tube Part No.
1/4	0.250	0.165	15,000	4-240 MPITUBE-2507-15K
3/8	0.375	0.250	15,000	6-240 MPITUBE-2507-15K
1/2	0.500	0.334	15,000	8-240 MPITUBE-2507-15K
3/4	0.750	0.500	15,000	12-240 MPITUBE-2507-15K
1	1.000	0.669	15,000	16-240 MPITUBE-2507-15K

[1] Customer should verify acceptable corrosion resistance for the combination of 316 fittings with 2507 tubing for their specific application (media and environment). Parker recommends matching fitting material to tube material.

[2] When compared to standard ASTM A789 tubing

[3] Based on 3/8 x .083" wall (.210" ID) tubing

NOTES:

Sizes 3/4" & 1" MPI™ 2507 tubing require hydraulic presetting when used with MPI™ fittings and also require -XF High Strength Ferrules.

Working pressures are calculated using an allowable stress of 41,000 psi for annealed 2507 Super Duplex tubing with a minimum tensile strength of 123,000 psi

Consult factory for pressure tables regarding other materials.

Dimensions in inches are for reference only, subject to change.

Instrument Grade Nominal Wall 2507 Tubing

Table 6 – MPI™ Fittings on Annealed 2507 Seamless Tubing [1,2,3]

Tube Size (in.)	Wall Thickness								
	0.035	0.049	0.065	0.083	0.095	0.109	0.120	0.134	0.156 [4]
	Working Pressure (psi)								
1/4	10,600	15,000	-	-	-	-	-	-	-
3/8	6,800	9,900	13,600 [4]	15,000 [4]	-	-	-	-	-
1/2	-	7,200	9,900	13,000 [4]	15,000 [4]	-	-	-	-
5/8	-	-	7,700	10,100 [4]	11,800 [4]	13,700 [4]	15,000 [4]	-	-
3/4	-	-	6,400	8,300	9,600 [4]	11,200 [4]	12,500 [4]	14,100 [4,5]	-
1	-	-	-	6,100	7,000	8,200 [4]	9,100 [4]	10,200 [4]	12,100 [4]

[1] Customer should verify acceptable corrosion resistance for the combination of 316 fittings with 2507 tubing for their specific application (media and environment). Parker recommends matching fitting material to tube material.

[2] Tubing per ASTM A789 or UNS S32750 material is recommended. Hardness not to exceed 32 HRC..

[3] ASME B31.3 allowable stress of 38,700 psi for UNS 32750 (A789) and tube wall thickness tolerance of ±10% used to calculate pressure ratings. Please contact factory for assistance in calculating pressure ratings for different parameters.

[4] Heavier wall 2507 (high lighted fields) may require additional preset pressure. Refer to page 80 for recommended 2507 tube preset pressures.

[5] 15,000 psi with a minimum wall thickness of 0.127"

[6] Size 10 MPI is only available for 2507 tube applications.

[7] 2507 Super Duplex size 12 & 16 MPI Fittings shall be ordered with the -XF high strength Ferrule Option.

Tel: +45 63 12 83 00 | Email: ps@hymatik.com | www.hymatik.com | Hvidkaervej 27a, DK-5250 Odense SV, Denmark

Parker MPI™ Medium Pressure Products

HBMP7

MPI™ Union Connector

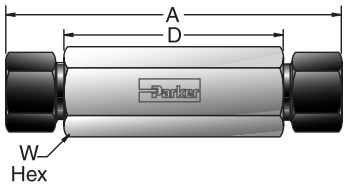

Parker Part No.	Inches				Working MAWP Pressure (PSIG)	-XF Option (PSIG)
	MPI™ Size	A	D	W Hex		
4-4 HBMP7*	1/4	2.88	1.88	5/8	15,000	-
6-4 HBMP7*	3/8 - 1/4	3.32	2.19	3/4	15,000	-
6-6 HBMP7*	3/8	3.44	2.19	3/4	15,000	-
8-4 HBMP7*	1/2 - 1/4	3.88	2.70	1	15,000	-
8-6 HBMP7*	1/2 - 3/8	4.01	2.70	1	15,000	-
8-8 HBMP7*	1/2	4.07	2.70	1	15,000	-
9-4 HBMP7*	9/16 - 1/4	3.95	2.70	1-1/16	15,000	-
9-6 HBMP7*	9/16 - 3/8	4.07	2.70	1-1/16	15,000	-
9-8 HBMP7*	9/16 - 1/2	4.13	2.70	1-1/16	15,000	-
9-9 HBMP7*	9/16	4.20	2.70	1-1/16	15,000	-
10-10 HBMP7*	5/8	4.42	2.92	1-3/16	15,000	-
12-6 HBMP7*	3/4 - 3/8	4.76	3.25	1-3/8	15,000	15,000
12-9 HBMP7*	3/4 - 9/16	5.15	3.51	1-3/8	15,000	15,000
12-12 HBMP7*	3/4	5.08	3.31	1-3/8	15,000	15,000
16-16 HBMP7*	1	6.52	4.25	1-3/4	12,500	15,000

* Add to the part number either **-SS** or **-2507** depending on selected material. (Example: **16-16 FBMP7-SS**)
Dimensions in inches are for reference only, subject to change.

GBMP7

MPI™ Female
NPT Connector

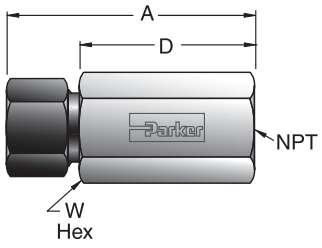

Parker Part No.	Inches					Working MAWP Pressure (PSIG)	-XF Option (PSIG)
	MPI™ Size	NPT Thread	A	D	W Hex		
4-2 GBMP7*	1/4	1/8 - 27	2.06	1.56	13/16	15,000	-
4-4 GBMP7*	1/4	1/4 - 18	2.25	1.75	1	15,000	-
4-6 GBMP7*	1/4	3/8 - 18	2.35	1.85	1-1/8	15,000	-
4-8 GBMP7*	1/4	1/2 - 14	2.58	2.08	1-3/8	15,000	-
6-2 GBMP7*	3/8	1/8 - 27	2.37	1.74	13/16	15,000	-
6-4 GBMP7*	3/8	1/4 - 18	2.56	1.93	1	15,000	-
6-6 GBMP7*	3/8	3/8 - 18	2.66	2.03	1-1/8	15,000	-
6-8 GBMP7*	3/8	1/2 - 14	2.87	2.24	1-3/8	15,000	-
8-4 GBMP7*	1/2	1/4 - 18	2.89	2.20	1	15,000	-
8-6 GBMP7*	1/2	3/8 - 18	2.99	2.30	1-1/8	15,000	-
8-8 GBMP7*	1/2	1/2 - 14	3.20	2.51	1-3/8	15,000	-
9-4 GBMP7*	9/16	1/4 - 18	2.68	2.18	1-3/8	15,000	-
9-6 GBMP7*	9/16	3/8 - 18	2.93	2.30	1-1/8	15,000	-
9-8 GBMP7*	9/16	1/2 - 14	3.26	2.51	1-3/8	15,000	-
10-8 GBMP7*	5/8	1/2 - 14	3.26	2.51	1-3/8	15,000	-
12-8 GBMP7*	3/4	1/2 - 14	3.70	2.82	1-3/8	15,000	15,000
16-4 GBMP7*	1	1/4 - 18	4.22	3.09	1-3/4	12,500	15,000
16-8 GBMP7*	1	1/2 - 14	4.47	3.34	1-3/4	12,500	15,000

* Add to the part number either **-SS** or **-2507** depending on selected material. (Example: **16-16 FBMP7-SS**)
Dimensions in inches are for reference only, subject to change.

Tel: +45 63 12 83 00 | Email: ps@hymatik.com | www.hymatik.com | Hvidkaervej 27a, DK-5250 Odense SV, Denmark

WBMP7

MPI™ Bulkhead Union Connector

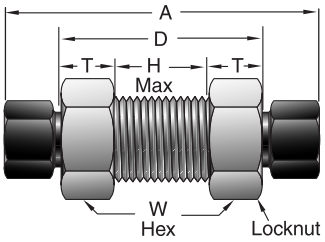

Parker Part No.	Inches MPI™ Size	A	D	H Max.	R** Thread	T	W Hex	Working MAWP Pressure (PSIG)	-XF Option (PSIG)
4-4 WBMP7*	1/4	2.88	1.88	.88	3/4 - 20	.50	1	15,000	-
6-6 WBMP7*	3/8	3.44	2.19	1.07	7/8 - 20	.56	1-1/8	15,000	-
8-8 WBMP7*	1/2	4.07	2.70	1.32	1-1/8 - 20	.69	1-3/8	10,000	-
8-9 WBMP7*	1/2 - 9/16	4.20	2.70	1.32	1-1/8 - 20	.69	1-3/8	10,000	-
9-8 WBMP7*	9/16 - 1/2	4.20	2.70	1.32	1-1/8 - 20	.69	1-3/8	15,000	-
9-9 WBMP7*	9/16	4.20	2.70	1.32	1-1/8 - 20	.69	1-3/8	15,000	-
12-12 WBMP7*	3/4	5.08	3.31	1.56	1-7/16 - 18	.88	1-7/8	15,000	15,000
16-16 WBMP7*	1	6.52	4.25	2.00	1-7/8 - 12	1.13	2-1/2	12,500	15,000

* Add to the part number either **-SS** or **-2507** depending on selected material. (Example: **16-16 FBMP7-SS**)
** Bulkhead hole approximately 1/64" (.015") larger than R Thread major diameter.
Dimensions in inches are for reference only, subject to change.

GH2BMP7

MPI™ Bulkhead to Female NPT Connector

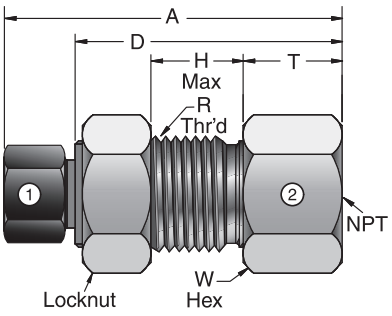

Parker Part No.	Inches MPI™ Size	NPT Thread	A	D	H Max.	R** Thread	T	W Hex	Working MAWP Pressure (PSIG)
4-4 GH2BMP7*	1/4	1/4 -18	2.38	1.88	.63	3/4 - 20	.75	1	15,000
6-8 GH2BMP7*	3/8	1/2 -14	3.13	2.50	.69	7/8 - 20	1.25	1-3/8	15,000
6-12 GH2BMP7*	3/8	3/4 -14	3.19	2.56	.69	7/8 - 20	1.31	1-1/2	10,000
8-12 GH2BMP7*	1/2	3/4 -14	3.50	2.81	.81	1-1/8 - 20	1.31	1-1/2	10,000
9-4 GH2BMP7*	9/16	1/4 -18	2.82	2.07	.70	1-1/8 - 20	.69	1-3/8	15,000

* Add to the part number either **-SS** or **-2507** depending on selected material. (Example: **16-16 FBMP7-SS**)
** Bulkhead hole approximately 1/64" (.015") larger than R Thread major diameter.
Dimensions in inches are for reference only, subject to change.

Parker MPI™ Medium Pressure Products

EBMP7

MPI™ Union Elbow

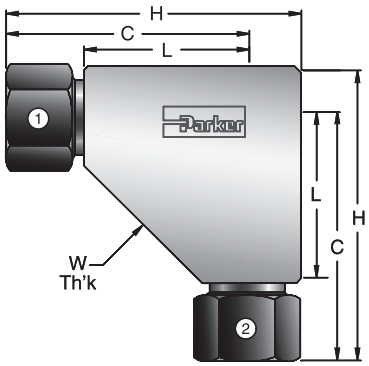

Parker Part No.	Inches MPI™ Size	C	H	L	W Th'k	Working MAWP Pressure (PSIG)	-XF Option (PSIG)
4-4 EBMP7*	1/4	1.53	1.88	1.03	5/8	15,000	-
6-6 EBMP7*	3/8	1.86	2.25	1.24	3/4	15,000	-
8-8 EBMP7*	1/2	2.22	2.81	1.54	1	15,000	-
9-9 EBMP7*	9/16	2.29	2.88	1.54	1	15,000	-
10-10 EBMP7*	5/8	2.46	3.09	1.71	1-3/16	15,000	-
12-12 EBMP7*	3/4	2.82	3.51	1.94	1-3/8	15,000	15,000
16-16 EBMP7*	1	3.63	4.51	2.50	1-3/4	12,500	15,000

* Add to the part number either **-SS** or **-2507** depending on selected material. (Example: **16-16 FBMP7-SS**)
Dimensions in inches are for reference only, subject to change.
* Sizes 12 and 16 utilize a square shaped body, all others use the triangular shaped body shown.

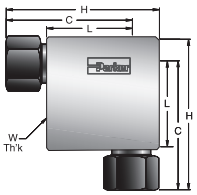

NBMP7

45° MPI™ Union Elbow

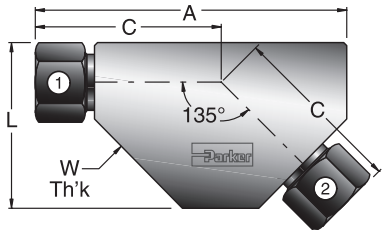

Parker Part No.	Inches MPI™ Size	A	C	L	W Th'k	Working MAWP Pressure (PSIG)	-XF Option (PSIG)
4-4 NBMP7*	1/4	2.56	1.50	1.38	5/8	15,000	-
6-6 NBMP7*	3/8	3.10	1.81	1.63	3/4	15,000	-
8-8 NBMP7*	1/2	3.76	2.18	2.13	1	15,000	-
9-9 NBMP7*	9/16	3.82	2.24	2.13	1	15,000	-
12-12 NBMP7*	3/4	4.76	2.82	2.63	1-3/8	15,000	15,000
16-16 NBMP7*	1	6.13	3.63	3.38	1-3/4	12,500	15,000

* Add to the part number either **-SS** or **-2507** depending on selected material. (Example: **16-16 FBMP7-SS**)
Dimensions in inches are for reference only, subject to change.
Note: Body shape may vary with size/configuration. Consult factory for size-specific drawing.

Tel: +45 63 12 83 00 | Email: ps@hymatik.com | www.hymatik.com | Hvidkaervej 27a, DK-5250 Odense SV, Denmark

JBMP7

MPI™ Union Tee

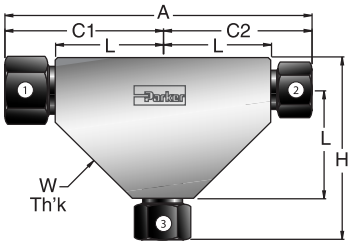

	Inches									Working MAWP Pressure (PSIG)	-XF Option (PSIG)
Parker Part No.	MPI™ Size #1	MPI™ Size #2	MPI™ Size #3	A	C1	C2	H	L	W Th'k		
4-4-4 JBMP7*	1/4	1/4	1/4	3.06	1.53	1.53	1.88	1.03	5/8	15,000	-
4-4-6 JBMP7*	1/4	1/4	3/8	3.47	1.74	1.74	2.25	1.24	3/4	15,000	-
6-4-4 JBMP7*	3/8	1/4	1/4	3.60	1.86	1.74	2.13	1.24	3/4	15,000	-
6-6-4 JBMP7*	3/8	3/8	1/4	3.72	1.86	1.86	2.13	1.24	3/4	15,000	-
6-6-6 JBMP7*	3/8	3/8	3/8	3.72	1.86	1.86	2.25	1.24	3/4	15,000	-
6-6-8 JBMP7*	3/8	3/8	1/2	4.32	2.16	2.16	2.81	1.54	1	15,000	-
6-6-9 JBMP7*	3/8	3/8	9/16	4.45	2.16	2.29	2.88	1.54	1	15,000	-
8-6-6 JBMP7*	1/2	3/8	3/8	4.38	2.22	2.16	2.75	1.54	1	15,000	-
8-8-6 JBMP7*	1/2	1/2	3/8	4.45	2.22	2.22	2.75	1.54	1	15,000	-
8-8-8 JBMP7*	1/2	1/2	1/2	4.45	2.22	2.22	2.81	1.54	1	15,000	-
9-6-4 JBMP7*	9/16	3/8	1/4	4.45	2.29	2.16	2.63	1.54	1	15,000	-
9-6-6 JBMP7*	9/16	3/8	1/4	4.45	2.29	2.16	2.75	1.54	1	15,000	-
9-9-4 JBMP7*	9/16	9/16	1/4	4.57	2.29	2.29	2.63	1.54	1	15,000	-
9-9-6 JBMP7*	9/16	9/16	3/8	4.57	2.29	2.29	2.75	1.54	1	15,000	-
9-9-9 JBMP7*	9/16	9/16	9/16	4.57	2.29	2.29	2.88	1.54	1	15,000	-
10-10-10 JBMP7*	5/8	5/8	5/8	5.00	2.50	2.50	3.10	1.75	1-3/16	15,000	-
12-12-9 JBMP7*	3/4	3/4	9/16	5.64	2.82	2.82	3.38	1.94	1-3/8	15,000	15,000
12-12-12 JBMP7*	3/4	3/4	3/4	5.64	2.82	2.82	3.51	1.94	1-3/8	15,000	15,000
16-16-9 JBMP7*	1	1	9/16	7.27	3.63	3.63	4.13	2.50	1-3/4	12,500	15,000
16-16-12 JBMP7*	1	1	3/4	7.27	3.63	3.63	4.26	2.50	1-3/4	12,500	15,000
16-16-16 JBMP7*	1	1	1	7.27	3.63	3.63	4.51	2.50	1-3/4	12,500	15,000

* Add to the part number either **-SS** or **-2507** depending on selected material. (Example: **16-16 FBMP7-SS**)
Dimensions in inches are for reference only, subject to change.
Note: Body shape may vary with size/configuration. Consult factory for size-specific drawing.

Tel: +45 63 12 83 00 | Email: ps@hymatik.com | www.hymatik.com | Hvidkaervej 27a, DK-5250 Odense SV, Denmark

MPI™ Medium Pressure Products

0BMP7

MPI™ to NPT
Female Branch Tee

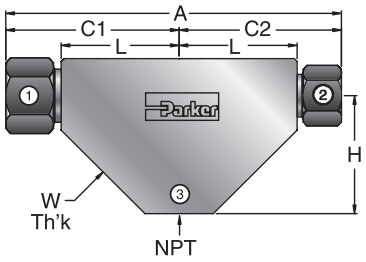

Parker Part No.	Inches								Working MAWP Pressure (PSIG)	-XF Option (PSIG)
	MPI™ Size #1	MPI™ Size #2	NPT Thread #3	A	C1	C2	H	W Th'k		
4-4-4 0BMP7*	1/4	1/4	1/4 - 18	3.47	1.74	1.74	1.24	3/4	15,000	-
6-6-4 0BMP7*	3/8	3/8	1/4 - 18	3.72	1.86	1.86	1.24	3/4	15,000	-
6-6-8 0BMP7*	3/8	3/8	1/2 - 14	3.88	1.94	1.94	1.54	1-3/8	15,000	-
8-8-8 0BMP7*	1/2	1/2	1/2 - 14	4.45	2.22	2.22	1.94	1-3/8	15,000	-
9-9-8 0BMP7*	9/16	9/16	1/2 - 14	4.57	2.29	2.29	1.94	1-3/8	15,000	-
12-12-8 0BMP7*	3/4	3/4	1/2 - 14	5.64	2.82	2.82	1.94	1-3/8	15,000	15,000
16-16-12 0BMP7*	1	1	3/4	7.26	3.63	3.63	2.5	1-3/4	10,000	10,000

* Add to the part number either **-SS** or **-2507** depending on selected material. (Example: **16-16 FBMP7-SS**)
Thickness of 2507 fittings may be greater than shown, contact factory for details if an issue
Dimensions in inches are for reference only, subject to change.
Note: Body shape may vary with size/configuration. Consult factory for size-specific drawing.

KBMP7

MPI™ Union Cross

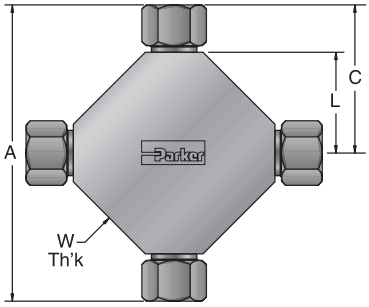

Parker Part No.	Inches					Working MAWP Pressure (PSIG)	-XF Option (PSIG)
	MPI™ Size	A	C	L	W Th'k		
4 KBMP7*	1/4	3.06	1.53	1.03	5/8	15,000	-
6 KBMP7*	3/8	3.72	1.86	1.24	3/4	15,000	-
8 KBMP7*	1/2	4.45	2.22	1.54	1	15,000	-
9 KBMP7*	9/16	4.57	2.29	1.54	1	15,000	-
10 KBMP7*	5/8	5.00	2.50	1.75	1-3/16	15,000	-
12 KBMP7*	3/4	5.64	2.82	1.94	1-3/8	15,000	15,000
16 KBMP7*	1	7.26	3.63	2.5	1-3/4	12,500	15,000

* Add to the part number either **-SS** or **-2507** depending on selected material. (Example: **16-16 FBMP7-SS**)
Thickness of 2507 fittings may be greater than shown, contact factory for details if an issue
Size 10 and 12 fitting bodies made from ASTM A479/UNS S20910
Dimensions in inches are for reference only, subject to change.
Note: Body shape may vary with size/configuration. Consult factory for size-specific drawing.

Tel: +45 63 12 83 00 | Email: ps@hymatik.com | www.hymatik.com | Hvidkaervej 27a, DK-5250 Odense SV, Denmark

MPI™ Medium Pressure Products

Parker

CBMP7

MPI™ to Male NPT Elbow

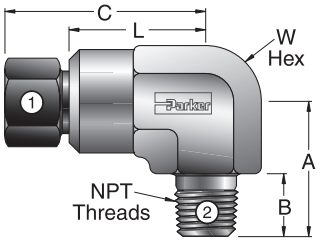

Parker Part No.	Inches							Working MAWP Pressure (PSIG)
	MPI™ Size	NPT Thread	A	B	C	L	W Th'k	
4-4 CBMP7-SS	1/4	1/4 - 18	1.13	.57	1.53	1.03	3/4	15,000
4-6 CBMP7-SS	1/4	3/8 - 18	1.13	.57	1.56	1.06	3/4	12,000
4-8 CBMP7-SS	1/4	1/2 - 18	1.41	.76	1.64	1.14	3/4	10,000
6-4 CBMP7-SS	3/8	1/4 - 18	1.23	.57	1.86	1.24	7/8	12,500
6-6 CBMP7-SS	3/8	3/8 - 18	1.23	.57	1.86	1.24	7/8	12,000
6-8 CBMP7-SS	3/8	1/2 - 14	1.41	.76	1.92	1.30	7/8	10,000

Dimensions in inches are for reference only, subject to change.
Sizes Limited due to forging size.
Not available in 2507 Material. If 316 SS Fitting is used with 2507 Tubing, Ferrules MUST be preset.
For 2507 fitting applications use an elbow and tube end adapter (EBMP7 & T7HF) in place of CBMP7.

SBMP7

MPI™ to
Male Branch NPT Tee

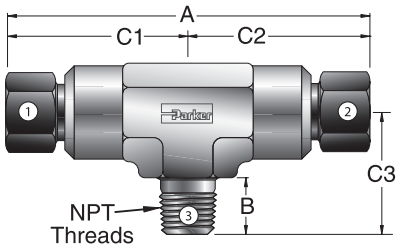

Parker Part No.	Inches									Working MAWP Pressure (PSIG)
	MPI™ Size #1	MPI™ Size #2	NPT Thread #3	A	C1	C2	C3	B	W Hex	
4-4-4 SBMP7-SS	1/4	1/4	1/4-18	3.25	1.63	1.63	1.13	.57	3/4	15,000
4-4-6 SBMP7-SS	1/4	1/4	3/8-18	3.25	1.63	1.63	1.13	.57	3/4	12,000
6-6-4 SBMP7-SS	3/8	3/8	1/4-18	3.72	1.86	1.86	1.23	.57	7/8	12,500
6-6-6 SBMP7-SS	3/8	3/8	3/8-18	3.72	1.86	1.86	1.23	.57	7/8	12,000

Dimensions in inches are for reference only, subject to change.
Sizes Limited due to forging size
Not available in 2507 Material.
If 316 SS Fitting is used with 2507 Tubing, Ferrules MUST be preset.
For 2507 fitting applications use a tee and tube end adapter (JBMP7 & T7HF) in place of SBMP7

Tel: +45 63 12 83 00 | Email: ps@hymatik.com | www.hymatik.com | Hvidkaervej 27a, DK-5250 Odense SV, Denmark

MPI™ Medium Pressure Products

RBMP7

MPI™ to
Male Run NPT Tee

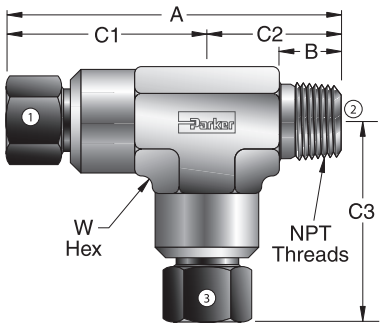

Parker Part No.	Inches									Working MAWP Pressure (PSIG)
	MPI™ Size #1	NPT Thread #2	MPI™ Size #3	A	C1	C2	C3	B	W Hex	
4-4-4 RBMP7-SS	1/4	1/4 - 18	1/4	2.76	1.63	1.13	1.63	.57	3/4	15,000
4-4-6 RBMP7-SS	1/4	1/4 - 18	3/8	2.85	1.63	1.23	1.86	.57	7/8	12,500
4-6-4 RBMP7-SS	1/4	3/8 - 18	1/4	2.76	1.63	1.13	1.63	.57	3/4	12,000
4-6-6 RBMP7-SS	1/4	3/8 - 18	3/8	2.85	1.63	1.23	1.86	.57	7/8	12,000
6-4-4 RBMP7-SS	3/8	1/4 - 18	1/4	3.09	1.86	1.23	1.63	.57	7/8	12,500
6-4-6 RBMP7-SS	3/8	1/4 - 18	3/8	3.09	1.86	1.23	1.86	.57	7/8	12,500
6-6-4 RBMP7-SS	3/8	3/8 - 18	1/4	3.09	1.86	1.23	1.63	.57	7/8	12,000
6-6-6 RBMP7-SS	3/8	3/8 - 18	3/8	3.09	1.86	1.23	1.86	.57	7/8	12,000

Dimensions in inches are for reference only, subject to change.
Sizes Limited due to forging size
Not available in 2507 Material.
If 316 SS Fitting is used with 2507 Tubing, Ferrules MUST be preset.
For 2507 fitting applications use a tee and tube end adapter (JBMP7 & T7HF) in place of RBMP7

X42HBMP7

Medium Pressure to
MPI™ Connector

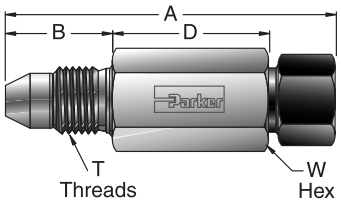

Parker Part No.	Inches							Working MAWP Pressure (PSIG)	-XF Option (PSIG)
	Medium Pressure Adapter	MPI™ Size	A	B	D	T Thread	W Hex		
4-4 X42HBMP7*	1/4	1/4	2.34	.81	1.03	7/16 - 20	5/8	15,000	-
4-6 X42HBMP7*	1/4	3/8	2.80	.81	1.37	7/16 - 20	3/4	15,000	-
4-9 X42HBMP7*	1/4	9/16	3.31	.81	1.75	7/16 - 20	1-1/16	15,000	-
6-4 X42HBMP7*	3/8	1/4	2.47	.94	1.03	9/16 - 18	3/4	15,000	-
6-6 X42HBMP7*	3/8	3/8	2.93	.94	1.37	9/16 - 18	3/4	15,000	-
6-8 X42HBMP7*	3/8	1/2	3.28	.94	1.65	9/16 - 18	1	15,000	-
6-9 X42HBMP7*	3/8	9/16	3.44	.94	1.75	9/16 - 18	1-1/16	15,000	-
9-4 X42HBMP7*	9/16	1/4	2.56	1.13	.93	13/16 - 16	7/8	15,000	-
9-6 X42HBMP7*	9/16	3/8	2.85	1.13	1.10	13/16 - 16	7/8	15,000	-
9-8 X42HBMP7*	9/16	1/2	3.16	1.13	1.35	13/16 - 16	1	15,000	-
9-9 X42HBMP7*	9/16	9/16	3.41	1.13	1.54	13/16 - 16	1-1/16	15,000	-
9-10 X42HBMP7*	9/16	5/8	3.54	1.13	1.66	13/16 - 16	1-3/16	15,000	-
9-12 X42HBMP7*	9/16	3/4	4.20	1.13	2.19	13/16 - 16	1-3/8	15,000	15,000
12-9 X42HBMP7*	3/4	9/16	3.55	1.31	1.35	3/4 - 14 NPS	1-1/16	15,000	-
12-12 X42HBMP7*	3/4	3/4	4.15	1.31	1.96	3/4 - 14 NPS	1-3/8	15,000	15,000
12-16 X42HBMP7*	3/4	1	5.27	1.31	2.83	3/4 - 14 NPS	1-3/4	12,500	15,000

Size	X42 Assemby Torque	Orifice I.D. (inches)
4	15 ft-lbf.	.109
6	25 ft-lbf.	.206
9	55 ft-lbf.	.360
12	75 ft-lbf.	.438

* Add to the part number either **-SS** or **-2507** depending on selected material. (Example: **16-16 FBMP7-SS**)
Dimensions in inches are for reference only, subject to change.

Tel: +45 63 12 83 00 | Email: ps@hymatik.com | www.hymatik.com | Hvidkaervej 27a, DK-5250 Odense SV, Denmark

MPI™ Medium Pressure Products

Parker

X41HBMP7

High Pressure to MPI™ Connector

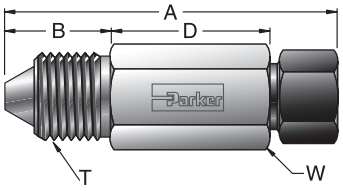

Sizes	X41 Assemby Torque	Orifice I.D. (inches)
4	25 ft-lbf.	.093
6	50 ft-lbf.	.156
9	75 ft-lbf.	.188

	Inches							Working MAWP Pressure (PSIG)	-XF Option (PSIG)
Parker Part No.	High Pressure Adapter	MPI™ Size	A	B	D.	T Thread	W Hex		
4-4 X41HBMP7*	1/4	1/4	2.25	.72	1.03	9/16 - 18	5/8	15,000	-
4-6 X41HBMP7*	1/4	3/8	2.71	.72	1.37	9/16 - 18	3/4	15,000	-
6-4 X41HBMP7*	3/8	1/4	2.52	.92	1.10	3/4 - 16	13/16	15,000	-
6-6 X41HBMP7*	3/8	3/8	2.92	.92	1.37	3/4 - 16	13/16	15,000	-
6-9 X41HBMP7*	3/8	9/16	3.37	.92	1.70	3/4 - 16	1-1/16	15,000	-
9-6 X41HBMP7*	9/16	3/8	3.12	1.13	1.37	1-1/8 - 12	1-3/16	15,000	-
9-9 X41HBMP7*	9/16	9/16	3.58	1.13	1.70	1-1/8 - 12	1-3/16	15,000	-
9-10 X41HBMP7*	9/16	5/8	3.69	1.13	1.81	1-1/8 - 12	1-3/16	15,000	-
9-12 X41HBMP7*	9/16	3/4	4.03	1.13	2.02	1-1/8 - 12	1-3/8	15,000	15,000

* Add to the part number either **-SS** or **-2507** depending on selected material. (Example: **16-16 FBMP7-SS**)
Dimensions in inches are for reference only, subject to change.

X44HBMP7

X44 Male by MPI™ Connector

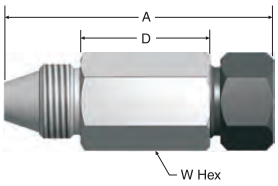

Sizes	X44 Assemby Torque
6	40 ft-lbf.
9	80 ft-lbf.
12	165 ft-lbf.

	Inches					Working MAWP Pressure (PSIG)	-XF Option (PSIG)
Parker Part No.	X44 Adapter	MPI™ Size	A	D	W Th'k		
6-6 X44HBMP7*	3/8	3/8	2.47	1.06	3/4	15,000	-
6-9 X44HBMP7*	3/8	9/16	3.16	1.64	1-1/16	15,000	-
6-12 X44HBMP7*	3/8	3/4	3.84	2.19	1-3/8	15,000	15,000
9-9 X44HBMP7*	9/16	9/16	3.20	1.54	1-1/16	15,000	-
9-12 X44HBMP7*	9/16	3/4	3.98	2.19	1-3/8	15,000	15,000
12-9 X44HBMP7*	3/4	9/16	3.15	1.35	1-1/4	15,000	-
12-12 X44HBMP7*	3/4	3/4	3.89	1.96	1-3/8	15,000	15,000
12-16 X44HBMP7*	3/4	1	5.01	2.83	1-3/4	12,500	15,000

* Add to the part number either **-SS** or **-2507** depending on selected material. (Example: **16-16 FBMP7-SS**)
Dimensions in inches are for reference only, subject to change.

Tel: +45 63 12 83 00 | Email: ps@hymatik.com | www.hymatik.com | Hvidkaervej 27a, DK-5250 Odense SV, Denmark

Parker MPI™ Medium Pressure Products

FBMP7

MPI™ to Male NPT Connector

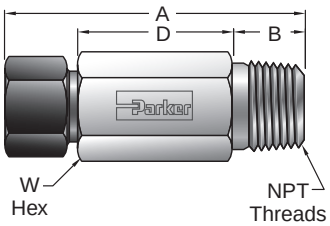

Parker Part No.	Inches						Working MAWP Pressure (PSIG)	-XF Option (PSIG)
	MPI™ Size	NPT Thread	A	B	D	W Hex		
4-2 FBMP7*	1/4	1/8 - 27	1.91	.38	1.03	5/8	15,000	-
4-4 FBMP7*	1/4	1/4 - 18	2.10	.57	1.03	5/8	15,000	-
4-6 FBMP7*	1/4	3/8 - 18	2.00	.57	.93	3/4	15,000	-
4-8 FBMP7*	1/4	1/2 - 14	2.17	.76	.91	7/8	15,000	-
6-4 FBMP7*	3/8	1/4 - 18	2.43	.57	1.24	3/4	15,000	-
6-6 FBMP7*	3/8	3/8 - 18	2.43	.57	1.24	3/4	15,000	-
6-8 FBMP7*	3/8	1/2 - 14	2.48	.76	1.10	7/8	15,000	-
8-6 FBMP7*	1/2	3/8 - 18	2.85	.57	1.60	1	15,000	-
8-8 FBMP7*	1/2	1/2 - 14	2.81	.76	1.37	1	15,000	-
9-6 FBMP7*	9/16	3/8 - 18	2.91	.57	1.59	1-1/16	15,000	-
9-8 FBMP7*	9/16	1/2 - 14	3.04	.76	1.53	1-1/16	15,000	-
10-8 FBMP7*	5/8	1/2 - 14	3.03	.76	1.52	1-3/16	15,000	-
12-8 FBMP7*	3/4	1/2 - 14	3.85	.76	2.21	1-3/8	15,000	15,000
12-12 FBMP7*	3/4	3/4 - 14	3.46	.76	1.82	1-3/8	10,000	10,000
16-12 FBMP7*	1	3/4 - 14	4.53	.76	2.64	1-3/4	10,000	10,000
16-16 FBMP7*	1	1 - 11.5	4.58	.95	2.50	1-3/4	10,000	10,000

* Add to the part number either **-SS** or **-2507** depending on selected material. (Example: **16-16 FBMP7-SS**)
Dimensions in inches are for reference only, subject to change.
2507 Super Duplex size 12 & 16 MPI Fittings shall be ordered with the **-XF** high strength Ferrule Option

XHBMP7

37° Flare to MPI™ Connector

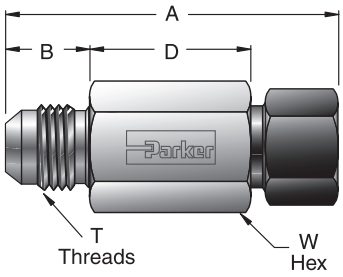

Parker Part No.	Inches							Working MAWP Pressure (PSIG)	-XF Option (PSIG)
	37º Flare Adapter	MPI™ Size	A	B	D	T Thread	W Hex		
4-4 XHBMP7*	1/4	1/4	2.08	.55	1.03	7/16 - 20	5/8	15,000	-
4-6 XHBMP7*	1/4	3/8	2.54	.55	1.37	7/16 - 20	3/4	15,000	-
4-8 XHBMP7*	1/4	1/2	2.90	.55	1.66	7/16 - 20	1	15,000	-
4-9 XHBMP7*	1/4	9/16	2.96	.55	1.66	7/16 - 20	1-1/16	15,000	-
4-10 XHBMP7*	1/4	5/8	3.14	.55	1.84	7/16 - 20	1-3/16	15,000	-
6-4 XHBMP7*	3/8	1/4	1.97	.56	.92	9/16 - 18	5/8	12,500	-
6-6 XHBMP7*	3/8	3/8	2.24	.56	1.06	9/16 - 18	3/4	12,500	-
6-8 XHBMP7*	3/8	1/2	2.90	.56	1.66	9/16 - 18	1	12,500	-
6-9 XHBMP7*	3/8	9/16	2.97	.56	1.66	9/16 - 18	1-1/16	12,500	-
8-6 XHBMP7*	1/2	3/8	2.34	.66	1.06	3/4 -16	3/16	12,500	-
8-8 XHBMP7*	1/2	1/2	2.69	.66	1.34	3/4 -16	1	12,500	-
8-9 XHBMP7*	1/2	9/16	2.77	.66	1.36	3/4 -16	1-1/16	12,500	-
8-10 XHBMP7*	1/2	5/8	3.13	.66	1.72	3/4 -16	1-3/16	12,500	-
8-12 XHBMP7*	1/2	3/4	3.38	.86	1.63	1-1/16 -12	1-3/8	12,500	12,500
16-16 XHBMP7*	1	1	4.23	.91	2.19	1-5/16 -12	1-3/4	7,200	7,200

* Add to the part number either **-SS** or **-2507** depending on selected material. (Example: **16-16 FBMP7-SS**)
Dimensions in inches are for reference only, subject to change.
2507 Super Duplex size 12 & 16 MPI Fittings shall be ordered with the **-XF** high strength Ferrule Option

Tel: +45 63 12 83 00 | Email: ps@hymatik.com | www.hymatik.com | Hvidkaervej 27a, DK-5250 Odense SV, Denmark

MP7H2BX

37° Flare Bulkhead to MPI™ Connector

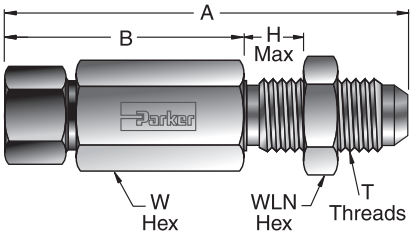

Parker Part No.	Inches								Working MAWP Pressure (PSIG)
	37º Flare Adapter	MPI™ Size	A	C	H Max.	T Thread	WLN Hex	W Hex	
4-4 MP7H2BX*	1/4	1/4	2.76	1.53	.40	7/16 - 20	11/16	5/8	15,000
6-6 MP7H2BX*	3/8	3/8	3.24	1.93	.48	9/16 - 18	13/16	3/4	12,500
8-8 MP7H2BX*	1/2	1/2	3.44	1.97	.50	3/4 - 16	1	1	12,500
9-8 MP7H2BX*	1/2	9/16	3.76	2.29	.50	3/4 - 16	1	1-1/16	12,500

* Add to the part number either **-SS** or **-2507** depending on selected material. (Example: **16-16 FBMP7-SS**)

* Bulkhead hole approximately 1/64" (.015") larger than thread major diameter.

Dimensions in inches are for reference only, subject to change.

MP7HBA

MPI™ to SAE Male O-Ring Connector

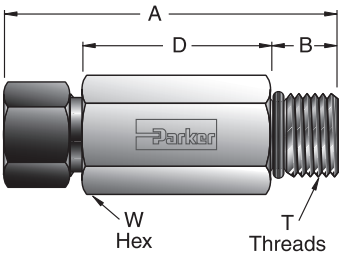

Parker Part No.	Inches							Working MAWP Pressure (PSIG)
	MPI™ Size	SAE** End	A	B	D	T Thread	W Hex	
4-4 MP7HBA*	1/4	1/4	1.90	.43	.97	7/16 - 20	5/8	12,500
4-6 MP7HBA*	1/4	3/8	1.94	.47	.97	9/16 - 18	11/16	12,500
4-8 MP7HBA*	1/4	1/2	1.97	.55	.91	3/4 - 16	7/8	12,500
6-4 MP7HBA*	3/8	1/4	2.41	.43	1.35	7/16 - 20	3/4	12,500
6-6 MP7HBA*	3/8	3/8	2.20	.47	1.10	9/16 - 18	3/4	12,500
6-8 MP7HBA*	3/8	1/2	2.23	.55	1.05	3/4 - 16	7/8	12,500
8-4 MP7HBA*	1/2	1/4	2.81	.43	1.69	7/16 - 20	1	12,500
8-6 MP7HBA*	1/2	3/8	2.82	.47	1.66	9/16 - 18	1	12,500
8-8 MP7HBA*	1/2	1/2	2.60	.55	1.36	3/4 - 16	1	12,500
9-6 MP7HBA*	9/16	3/8	2.89	.47	1.67	9/16 -18	1-1/16	12,500
9-8 MP7HBA*	9/16	1/2	2.89	.55	1.59	3/4 -16	1-1/16	12,500

* Add to the part number either **-SS** or **-2507** depending on selected material. (Example: **16-16 FBMP7-SS**)

**All male o-ring ends for MPI™ fittings are heavy duty and comply with SAE J1926/2. This end has maximum thread engagement for strength and requires the minimum full thread engagement specified in SAE J1926/1 for the female port.

Standard O-ring material is Nitrile #N0552-90.

Dimensions in inches are for reference only, subject to change.

Tel: +45 63 12 83 00 | Email: ps@hymatik.com | www.hymatik.com | Hvidkaervej 27a, DK-5250 Odense SV, Denmark

Parker MPI™ Medium Pressure Products

TRBMP7

MPI™ Tube Stub Reducer

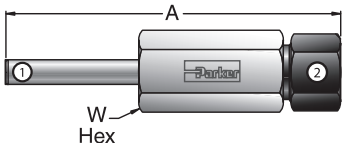

Parker Part No.	Inches				Working MAWP Pressure (PSIG)	-XF Option (PSIG)
	MPI™ Tube Stub #1	MPI™ Size #2	A	W Hex		
4-6 TRBMP7*	1/4	3/8	3.49	3/4	15,000	-
4-8 TRBMP7*	1/4	1/2	3.94	1	15,000	-
4-9 TRBMP7*	1/4	9/16	4.00	1-1/16	15,000	-
6-4 TRBMP7*	3/8	1/4	3.30	5/8	15,000	-
6-8 TRBMP7*	3/8	1/2	4.17	1	15,000	-
6-9 TRBMP7*	3/8	9/16	4.24	1-1/16	15,000	-
8-4 TRBMP7*	1/2	1/4	3.56	5/8	15,000	-
8-6 TRBMP7*	1/2	3/8	3.99	3/4	15,000	-
9-4 TRBMP7*	9/16	1/4	3.63	5/8	15,000	-
9-6 TRBMP7*	9/16	3/8	4.06	3/4	15,000	-
9-12 TRBMP7*	9/16	3/4	4.97	1-3/8	15,000	15,000
12-4 TRBMP7*	3/4	1/4	4.17	13/16	15,000	-
12-4 TRBMP7-2507-Z6-XF	3/4	1/4	4.17	13/16	NA	15,000
12-6 TRBMP7*	3/4	3/8	4.42	13/16	15,000	-
12-6 TRBMP7-2507-Z6-XF	3/4	3/8	4.42	13/16	NA	15,000
12-8 TRBMP7-2507-Z6-XF	3/4	1/2	4.76	1	NA	15,000
12-9 TRBMP7*	3/4	9/16	4.82	1-1/16	15,000	-
16-8 TRBMP7-2507-Z6-XF	1	1/2	4.96	11/16	NA	15,000
16-9 TRBMP7*	1	9/16	5.01	1-1/16	12,500	12,500
16-12 TRBMP7*-SS	1	3/4	5.38	1-3/8	12,500	15,000
16-12 TRBMP7-2507-Z6-XF	1	3/4	5.38	1-3/8	NA	15,000

* Add to the part number either **-SS** or **-2507** depending on selected material. (Example: **16-16 FBMP7-SS**)
Add "**-Z6**" to part number for part assembled with preset ferrules and nuts.
Sizes 12 & 16 come pre-assembled with **-XF** and **-Z6** Options
Dimensions in inches are for reference only, subject to change.

MF T7HG

MPI™ Tube Stub X
Medium Pressure Port

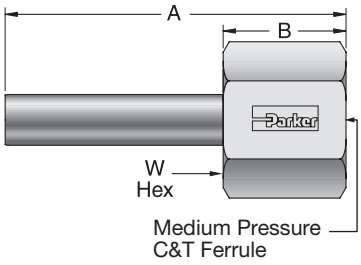

Parker Part No.	Inches					Working MAWP Pressure (PSIG)	-XF Option (PSIG)
	MPI™ Tube Stub	Medium Pressure C&T Port	A	B	W Hex		
9-9MF T7HG*	9/16	9/16	3.06	1.12	1	15,000	-
9-12MF T7HG*	9/16	3/4	3.57	1.63	1-3/8	15,000	-
12-9MF T7HG*-SS	3/4	9/16	3.41	1.12	1	15,000	15,000
16-9MF T7HG*-SS	1	9/16	4	1.12	1-1/16	12,500	12,500
12-9MF T7HG-2507-Z6-XF	3/4	9/16	3.41	1.12	18	NA	15,000
16-9MF T7HG-2507-Z6-XF	1	9/16	4	1.12	1-1/16	NA	15,000

* Add to the part number either **-SS** or **-2507** depending on selected material. (Example: **16-16 FBMP7-SS**)
Add "**-Z6**" to part number for part assembled with preset ferrules and nuts.
Dimensions in inches are for reference only, subject to change.

Tel: +45 63 12 83 00 | Email: ps@hymatik.com | www.hymatik.com | Hvidkaervej 27a, DK-5250 Odense SV, Denmark

MPI™ Medium Pressure Products

T7HG

MPI™ Tube Stub to Female NPT Pipe

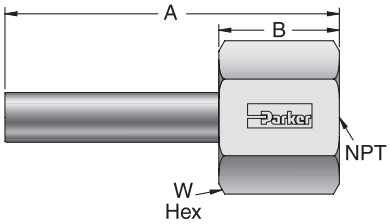

Parker Part No.	Inches						Working MAWP Pressure (PSIG)	-XF Option (PSIG)
	MPI™ Tube Stub	Female NPT End	A	B	NPT Thread	W Hex		
4-2 T7HG*	1/4	1/8	2.09	.72	1/8 - 27	13/16	15,000	-
4-4 T7HG*	1/4	1/4	2.28	.91	1/4 - 18	1	15,000	-
4-8 T7HG*	1/4	1/2	2.64	1.27	1/2 - 14	1-3/8	15,000	-
6-2 T7HG*	3/8	1/8	2.33	.72	1/8 - 27	13/16	15,000	-
6-4 T7HG*	3/8	1/4	2.52	.91	1/4 - 18	1	15,000	-
6-6 T7HG*	3/8	3/8	2.55	.94	3/8 - 18	1-1/8	15,000	-
6-8 T7HG*	3/8	1/2	2.88	1.27	1/2 - 14	1-3/8	15,000	-
8-2 T7HG*	1/2	1/8	2.60	.72	1/8 - 27	13/16	15,000	-
8-4 T7HG*	1/2	1/4	2.79	.91	1/4 - 18	1	15,000	-
8-6 T7HG*	1/2	3/8	2.82	.94	3/8 - 18	1-1/8	15,000	-
8-8 T7HG*	1/2	1/2	3.14	1.27	1/2 - 14	1-3/8	12,500	-
9-4 T7HG*	9/16	1/4	2.84	.91	1/4 - 18	1	15,000	-
9-6 T7HG*	9/16	3/8	2.88	.94	3/8 - 18	1-1/8	15,000	-
9-8 T7HG*	9/16	1/2	3.20	1.27	1/2 - 14	1-3/8	15,000	-
12-8 T7HG*-SS	3/4	1/2	3.55	1.27	1/2 - 14	1-3/8	15,000	-
12-8 T7HG-2507-Z6-XF	3/4	1/2	3.55	1.27	1/2 - 14	1-3/8	NA	15,000
12-12 T7HG*-SS	3/4	3/4	3.60	1.31	3/4 - 11 1/2	1-1/2	10,000	-
12-12 T7HG-2507-Z6-XF	3/4	3/4	3.60	1.31	3/4 - 11 1/2	1-1/2	NA	10,000
16-16 T7HG*-SS	1	1	4.38	1.50	1 - 11 1/2	1-7/8	10,000	-
16-16 T7HG-2507-Z6-XF	1	1	4.38	1.5	1 - 11 1/2	1-7/8	NA	10,000

* Add to the part number either **-SS** or **-2507** depending on selected material. (Example: **16-16 FBMP7-SS**)
Add "**-Z6**" to part number for part assembled with preset ferrules and nuts.
Dimensions in inches are for reference only, subject to change.

MPI™ Medium Pressure Products

HF GM7

MPI™ Male End to High Pressure C&T Port

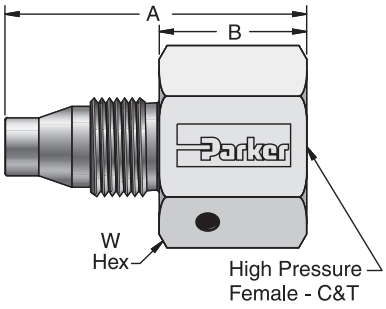

Parker Part No.	Inches						Working MAWP Pressure (PSIG)
	MPI™ Male Thread[1]	High Pressure C&T Port	A	B	C&T Thread	W Hex	
4-4HF GM7*	1/4	1/4	1.57	.69	9/16 - 18	3/4	15,000
6-4HF GM7*	3/8	1/4	1.68	.69	9/16 - 18	3/4	15,000
6-6HF GM7*	3/8	3/8	1.87	.88	3/4 - 16	1	15,000
8-4HF GM7*	1/2	1/4	1.89	.69	9/16 - 18	15/16	15,000
8-6HF GM7*	1/2	3/8	2.07	.88	3/4 - 16	1	15,000
9-4HF GM7*	9/16	1/4	1.89	.69	9/16 - 18	1	15,000
9-6HF GM7*	9/16	3/8	2.07	.88	3/4 - 16	1	15,000
12-4HF GM7*	3/4	1/4	2.17	.75	9/16 - 18	1-1/4	15,000
12-6HF GM7*	3/4	3/8	2.30	.88	3/4 - 16	1-1/4	15,000

* Add to the part number either **-SS** or **-2507** depending on selected material. (Example: **16-16 FBMP7-SS**)
[1]Assemble 1/4 to 1/2 turn from finger tight & lubricate threads & taper before each remake.
Dimensions in inches are for reference only, subject to change.

HP C&T Assemby Torque	Orifice (inches)
4=10 ft-lb.	.094
6=15 ft-lb.	.125
9=20 ft-lb.	.186

GM7

MPI™ Male End to Female NPT

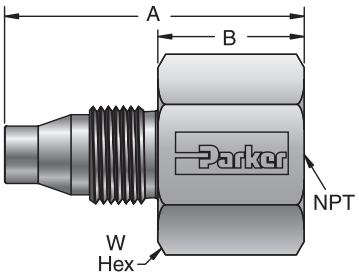

Parker Part No.	Inches						Working MAWP Pressure (PSIG)
	MPI™ Male Thread[1]	Female NPT End	A	B	NPT Thread	W Hex	
4-4 GM7*	1/4	1/4	1.73	.85	1/4 - 18	1	15,000
4-6 GM7*	1/4	3/8	1.83	.95	3/8 - 18	1-1/8	15,000
6-4 GM7*	3/8	1/4	1.84	.85	1/4 - 18	1	15,000
6-6 GM7*	3/8	3/8	1.94	.95	3/8 - 18	1-1/8	15,000
6-8 GM7*	3/8	1/2	2.17	1.17	1/2 - 14	1-3/8	15,000
8-4 GM7*	1/2	1/4	2.05	.85	1/4 - 18	1	15,000
8-6 GM7*	1/2	3/8	2.15	.95	3/8 - 18	1-1/8	15,000
8-8 GM7*	1/2	1/2	2.37	1.17	1/2 - 14	1-3/8	15,000
9-4 GM7*	9/16	1/4	2.05	.85	1/4 - 18	1	15,000
9-6 GM7*	9/16	3/8	2.15	.95	3/8 - 18	1-1/8	15,000
9-8 GM7*	9/16	1/2	2.37	1.17	1/2 - 14	1-3/8	15,000
12-4 GM7*	3/4	1/4	2.17	.75	1/4 - 18	1-1/4	15,000
12-6 GM7*	3/4	3/8	2.17	.75	3/8 - 18	1-1/4	15,000
12-8 GM7*	3/4	1/2	2.59	1.17	1/2 - 14	1-3/8	15,000

* Add to the part number either **-SS** or **-2507** depending on selected material. (Example: **16-16 FBMP7-SS**)
[1]Assemble 1/4 to 1/2 turn from finger tight & lubricate threads & taper before each remake.
Dimensions in inches are for reference only, subject to change.

Tel: +45 63 12 83 00 | Email: ps@hymatik.com | www.hymatik.com | Hvidkaervej 27a, DK-5250 Odense SV, Denmark

T7HBT7

MPI™ Tube Port Connector

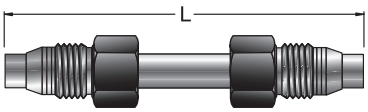

Parker Part No.	Inches		Working MAWP Pressure (PSIG)
	Tube Size	L	
*4 T7HBT7-SS	1/4	2.72	15,000
4 T7HBT7-SS 4.0	1/4	4.00	15,000
4 T7HBT7-SS 6.0	1/4	6.00	15,000
4 T7HBT7-SS7 8.0	1/4	8.00	15,000
4 T7HBT7-SS 10.0	1/4	10.00	15,000
4 T7HBT7-SS 12.0	1/4	12.00	15,000
*6 T7HBT7-SS	3/8	3.19	15,000
6 T7HBT7-SS 4.0	3/8	4.00	15,000
6 T7HBT7-SS 6.0	3/8	6.00	15,000
6 T7HBT7-SS 8.0	3/8	8.00	15,000
6 T7HBT7-SS 10.0	3/8	10.00	15,000
6 T7HBT7-SS 12.0	3/8	12.00	15,000
*9 T7HBT7-SS	9/16	3.85	15,000
9 T7HBT7-SS 6.0	9/16	6.00	15,000
9 T7HBT7-SS 8.0	9/16	8.00	15,000
9 T7HBT7-SS 10.0	9/16	10.00	15,000
9 T7HBT7-SS 12.0	9/16	12.00	15,000
*12 T7HBT7-SS	3/4	4.55	15,000
12 T7HBT7-SS 6.0	3/4	6.00	15,000
12 T7HBT7-SS 8.0	3/4	8.00	15,000
12 T7HBT7-SS 10.0	3/4	10.00	15,000
12 T7HBT7-SS 12.0	3/4	12.00	15,000

Assemble 1/2 turn from finger tight.

*Same Assembled Length as MP7PC.

Replace "SS" with "2507" for Super Duplex

Size 12 in 2507 is assembled with **-XF** Ferrules as standard

Dimensions in inches are for reference only, subject to change.

Tel: +45 63 12 83 00 | Email: ps@hymatik.com | www.hymatik.com | Hvidkaervej 27a, DK-5250 Odense SV, Denmark

MPI™ Medium Pressure Products

T7EBT7

MPI™ Tube Elbow

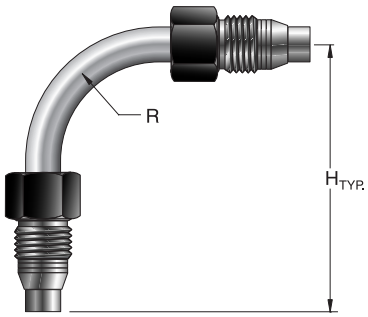

Parker Part No.	Inches			Working MAWP Pressure (PSIG)
	Tube Size	H	R	
4 T7EBT7-SS*	1/4	2.12	0.75	15,000
4 T7EBT7-SS 2.9*†	1/4	2.91	0.75	15,000
4 T7EBT7-SS 6.0*	1/4	6.00	0.75	15,000
4 T7EBT7-SS 8.0*	1/4	8.00	0.75	15,000
4 T7EBT7-SS 10.0*	1/4	10.00	0.75	15,000
4 T7EBT7-SS 12.0*	1/4	12.00	0.75	15,000
6 T7EBT7-SS*	3/8	2.88	1.25	15,000
6 T7EBT7-SS 3.5*†	3/8	3.47	1.25	15,000
6 T7EBT7-SS 6.0*	3/8	6.00	1.25	15,000
6 T7EBT7-SS 8.0*	3/8	8.00	1.25	15,000
6 T7EBT7-SS 10.0*	3/8	10.00	1.25	15,000
6 T7EBT7-SS 12.0*	3/8	12.00	1.25	15,000
9 T7EBT7-SS*†	9/16	4.22	2.00	15,000
9 T7EBT7-SS 6.0*	9/16	6.00	2.00	15,000
9 T7EBT7-SS 8.0*	9/16	8.00	2.00	15,000
9 T7EBT7-SS 10.0*	9/16	10.00	2.00	15,000
9 T7EBT7-SS 12.0*	9/16	12.00	2.00	15,000
12 T7EBT7-SS*	3/4	5.31	3.00	15,000
12 T7EBT7-SS 6.0*	3/4	6.00	3.00	15,000
12 T7EBT7-SS 8.0*	3/4	8.00	3.00	15,000
12 T7EBT7-SS 10.0*	3/4	10.00	3.00	15,000
12 T7EBT7-SS 12.0*	3/4	12.00	3.00	15,000

† Similar Assembled Lengths as EBMP7 with two (2) MP7PCs.
*** Replace "SS" with "2507" for Super Duplex**
Assemble 1/2 turn from finger tight.
Size 12 in 2507 is assembled with **-XF** Ferrules as standard.
Dimensions in inches are for reference only, subject to change.

Tel: +45 63 12 83 00 | Email: ps@hymatik.com | www.hymatik.com | Hvidkaervej 27a, DK-5250 Odense SV, Denmark

MPI™ Medium Pressure Products

Parker

T7NBT7

45° MPI™ Tube Stub Elbow

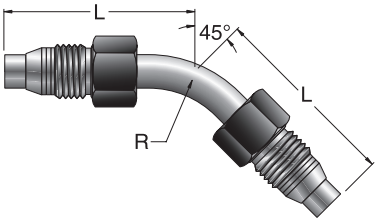

Parker Part No.	Inches			Working MAWP Pressure (PSIG)
	Tube Size	L	R	
4 T7NBT7-SS*	1/4	1.69	0.75	15,000
4 T7NBT7-SS 2.9*†	1/4	2.88	0.75	15,000
4 T7NBT7-SS 6.0*	1/4	6.00	0.75	15,000
4 T7NBT7-SS 8.0*	1/4	8.00	0.75	15,000
4 T7NBT7-SS 10.0*	1/4	10.00	0.75	15,000
4 T7NBT7-SS 12.0*	1/4	12.00	0.75	15,000
6 T7NBT7-SS*	3/8	2.14	1.25	15,000
6 T7NBT7-SS 3.4*†	3/8	3.42	1.25	15,000
6 T7NBT7-SS 6.0*	3/8	6.00	1.25	15,000
6 T7NBT7-SS 8.0*	3/8	8.00	1.25	15,000
6 T7NBT7-SS 10.0*	3/8	10.00	1.25	15,000
6 T7NBT7-SS 12.0*	3/8	12.00	1.25	15,000
9 T7NBT7-SS*	9/16	2.77	2.00	15,000
9 T7NBT7-SS 4.2*†	9/16	4.18	2.00	15,000
9 T7NBT7-SS 6.0*	9/16	6.00	2.00	15,000
9 T7NBT7-SS 8.0*	9/16	8.00	2.00	15,000
9 T7NBT7-SS 10.0*	9/16	10.00	2.00	15,000
9 T7NBT7-SS 12.0*	9/16	12.00	2.00	15,000
12 T7NBT7-SS*	3/4	3.55	3.00	15,000
12 T7NBT7-SS 5.1*	3/4	5.11	3.00	15,000
12 T7NBT7-SS 6.0*	3/4	6.00	3.00	15,000
12 T7NBT7-SS 8.0*	3/4	8.00	3.00	15,000
12 T7NBT7-SS 10.0*	3/4	10.00	3.00	15,000
12 T7NBT7-SS 12.0*	3/4	12.00	3.00	15,000

† Similar Assembled Lengths as NBMP7 with two (2) MP7PCs.
*** Replace "SS" with "2507" for Super Duplex**
Size 12 in 2507 is assembled with **-XF** Ferrules as standard
Assemble 1/2 turn from finger tight.
Dimensions in inches are for reference only, subject to change.

Parker MPI™ Medium Pressure Products

X42HT7

Medium Pressure to MPI™ Tube Stub

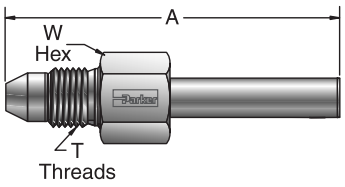

Size	X42 Assemby Torque	Orifice I.D. (inches)
4	20 ft-lbf.	.109
6	30 ft-lbf.	.206
9	55 ft-lbf.	.360
12	90 ft-lbf.	.438

	Inches					Working MAWP Pressure (PSIG)	-XF Option (PSIG)
Parker Part No.	Medium Pressure Adapter Size	MPI™ Tube Stub	A	T Thread	W Hex		
4-4 X42HT7*	1/4	1/4	2.68	7/16 - 20	5/8	15,000	-
4-6 X42HT7*	1/4	3/8	2.92	7/16 - 20	5/8	15,000	-
4-8 X42HT7*	1/4	1/2	3.18	7/16 - 20	5/8	15,000	-
4-9 X42HT7*	1/4	9/16	3.25	7/16 - 20	5/8	15,000	-
6-4 X42HT7*	3/8	1/4	2.94	9/16 - 18	3/4	15,000	-
6-6 X42HT7*	3/8	3/8	3.17	9/16 - 18	3/4	15,000	-
6-8 X42HT7*	3/8	1/2	3.44	9/16 - 18	3/4	15,000	-
6-9 X42HT7*	3/8	9/16	3.50	9/16 - 18	3/4	15,000	-
9-4 X42HT7*	9/16	1/4	3.25	13/16 - 16	7/8	15,000	-
9-6 X42HT7*	9/16	3/8	3.49	13/16 - 16	7/8	15,000	-
9-8 X42HT7*	9/16	1/2	3.75	13/16 - 16	7/8	15,000	-
9-9 X42HT7*	9/16	9/16	3.81	13/16 - 16	7/8	15,000	-
9-12 X42HT7-2507-Z6-XF	9/16	3/4	4.16	13/16 - 16	7/8	15,000	-
12-9 X42HT7*	3/4	9/16	4.00	3/4 - 14 NPS	1-1/8	15,000	-
12-12 X42HT7-2507-Z6-XF	3/4	3/4	4.35	3/4 - 14 NPS	1-1/8	15,000	15,000

* Add to the part number either **-SS** or **-2507** depending on selected material. (Example: **16-16 FBMP7-SS**)
Add "**-Z6**" to part number for part assembled with preset ferrules and nuts.
Dimensions in inches are for reference only, subject to change.

X41HT7

High Pressure to MPI™ Tube Stub

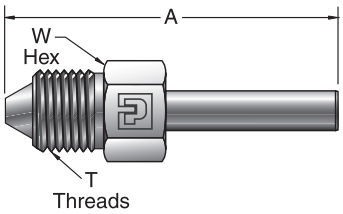

Size	X41 Assemby Torque	Orifice (inches)
4	10 ft-lbf.	.093
6	15 ft-lbf.	.156
9	20 ft-lbf.	.188

	Inches					Working MAWP Pressure (PSIG)
Parker Part No.	High Pressure Adapter Size	MPI™ Tube Stub	A	T Thread	W Hex	
4-4 X41HT7*	1/4	1/4	2.59	9/16 - 18	5/8	15,000
4-6 X41HT7*	1/4	3/8	2.83	9/16 - 18	5/8	15,000
4-8 X41HT7*	1/4	1/2	3.10	9/16 - 18	5/8	15,000
4-9 X41HT7*	1/4	9/16	3.16	9/16 - 18	5/8	15,000
6-4 X41HT7*	3/8	1/4	2.92	3/4 - 16	13/16	15,000
6-6 X41HT7*	3/8	3/8	3.16	3/4 - 16	13/16	15,000
6-8 X41HT7*	3/8	1/2	3.43	3/4 - 16	13/16	15,000
6-9 X41HT7*	3/8	9/16	3.49	3/4 - 16	13/16	15,000
9-4 X41HT7*	9/16	1/4	3.25	1-1/8 - 12	1-13/16	15,000
9-6 X41HT7*	9/16	3/8	3.49	1-1/8 - 12	1-13/16	15,000
9-8 X41HT7*	9/16	1/2	3.75	1-1/8 - 12	1-13/16	15,000
9-9 X41HT7*	9/16	9/16	3.82	1-1/8 - 12	1-13/16	15,000

* Add to the part number either **-SS** or **-2507** depending on selected material. (Example: **16-16 FBMP7-SS**)
Add "**-Z6**" to part number for part assembled with preset ferrules and nuts.
Dimensions in inches are for reference only, subject to change.

Tel: +45 63 12 83 00 | Email: ps@hymatik.com | www.hymatik.com | Hvidkaervej 27a, DK-5250 Odense SV, Denmark

MPI™ Medium Pressure Products

Parker

X44HT7

X44 Male by MPI™ Tube Stub

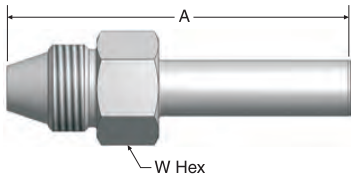

Note:
See page 81 for X44 port dimensions and assembly torque

Parker Part No.	Inches				Working MAWP Pressure (PSIG)	-XF Option (PSIG)
	X44 Adapter	MPI™ Size	A	W Th'k		
6-4 X44HT7*	3/8	1/4	2.65	11/16	15,000	-
6-6 X44HT7*	3/8	3/8	2.89	11/16	15,000	-
6-12 X44HT7*-SS	3/8	3/4	3.69	13/16	15,000	15,000
6-12 X44HT7-2507-Z6-XF	3/8	3/4	3.69	13/16	-	15,000
9-9 X44HT7*	9/16	9/16	3.60	1	15,000	-
9-12 X44HT7*-SS	9/16	3/4	3.95	1	15,000	-
9-12 X44HT7-2507-Z6-XF	9/16	3/4	3.95	1	-	15,000
12-9 X44HT7*	3/4	9/16	3.74	1-1/4	15,000	-
12-12 X44HT7*-SS	3/4	3/4	4.09	1-1/4	15,000	-
12-12 X44HT7-2507-Z6-XF	3/4	3/4	4.09	1-1/4	-	15,000

* Add to the part number either **-SS** or **-2507** depending on selected material. (Example: **16-16 FBMP7-SS**)
Dimensions in inches are for reference only, subject to change.

T7HF

MPI™ Tube Stub to Male NPT Pipe

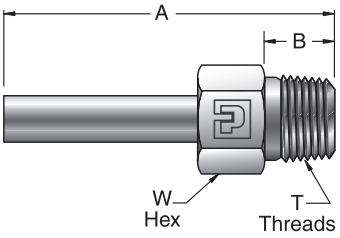

Parker Part No.	Inches						Working MAWP Pressure (PSIG)	-XF Option (PSIG)
	MPI™ Tube Stub	Male NPT End	A	B	NPT Thread	W Hex		
4-4 T7HF*	1/4	1/4	2.32	.57	1/4 - 18	5/8	15,000	-
4-6 T7HF*	1/4	3/8	2.44	.57	3/8 - 18	3/4	15,000	-
4-8 T7HF*	1/4	1/2	2.76	.76	1/2 - 14	7/8	15,000	-
6-4 T7HF*	3/8	1/4	2.56	.57	1/4 - 18	5/8	15,000	-
6-6 T7HF*	3/8	3/8	2.68	.57	3/8 - 18	3/4	15,000	-
6-8 T7HF*	3/8	1/2	2.99	.76	1/2 - 14	7/8	15,000	-
8-4 T7HF*	1/2	1/4	2.82	.57	1/4 - 18	5/8	15,000	-
8-6 T7HF*	1/2	3/8	2.95	.57	3/8 - 18	3/4	15,000	-
8-8 T7HF*	1/2	1/2	3.26	.76	1/2 - 14	7/8	15,000	-
9-4 T7HF*	9/16	1/4	2.88	.57	1/4 - 18	5/8	15,000	-
9-6 T7HF*	9/16	3/8	3.01	.57	3/8 - 18	3/4	15,000	-
9-8 T7HF*	9/16	1/2	3.32	.76	1/2 - 14	7/8	15,000	-
9-12 T7HF	9/16	3/4	3.43	.76	3/4 - 14	1-1/8	10,000	-
12-8 T7HF*-SS	3/4	1/2	3.67	.76	1/2 - 14	7/8	15,000	15,000
12-12 T7HF*-SS	3/4	3/4	3.80	.76	3/4 - 14	1-1/8	10,000	10,000
12-8 T7HF-2507-Z6-XF	3/4	1/2	3.67	.76	1/2 - 14	7/8	NA	15,000
12-12 T7HF-2507-Z6-XF	3/4	3/4	3.80	.76	3/4 - 14	1-1/8	NA	10,000
16-16 T7HF-SS	1	1	4.70	.95	1-11 1/2	1-3/8	10,000	10,000
16-16 T7HF-2507-Z6-XF	1	1	4.70	.95	1-11 1/2	1-3/8	NA	10,000

* Add to the part number either **-SS** or **-2507** depending on selected material. (Example: **16-16 FBMP7-SS**)
Add "**-Z6**" to part number for part assembled with preset ferrules and nuts.
Dimensions in inches are for reference only, subject to change.

Tel: +45 63 12 83 00 | Email: ps@hymatik.com | www.hymatik.com | Hvidkaervej 27a, DK-5250 Odense SV, Denmark

Parker MPI™ Medium Pressure Products

XHT7

37° Flare to MPI™ Tube Stub

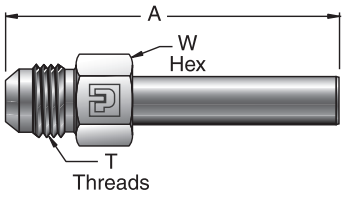

Parker Part No.	Inches					Working MAWP Pressure (PSIG)
	37º Flare Adapter Size	MPI™ Tube Stub	A	T Thread	W Hex	
4-4 XHT7*	1/4	1/4	2.24	7/16 - 20	1/2	15,000
4-6 XHT7*	1/4	3/8	2.47	7/16 - 20	1/2	15,000
6-4 XHT7*	3/8	1/4	2.37	9/16 - 18	5/8	12,500
6-6 XHT7*	3/8	3/8	2.60	9/16 - 18	5/8	12,500
6-8 XHT7*	3/8	1/2	2.87	9/16 - 18	5/8	12,500
6-9 XHT7*	3/8	9/16	2.93	9/16 - 18	5/8	12,500
8-6 XHT7*	1/2	3/8	2.77	3/4 - 16	13/16	12,500
8-8 XHT7*	1/2	1/2	3.04	3/4 - 16	13/16	12,500
8-9 XHT7*	1/2	9/16	3.10	3/4 - 16	13/16	12,500

* Add to the part number either **-SS** or **-2507** depending on selected material. (Example: **16-16 FBMP7-SS**)

Add "**-Z6**" to part number for part assembled with preset ferrules and nuts.
Dimensions in inches are for reference only, subject to change.

T7HOA

MPI™ Tube Stub to Male SAE O-ring

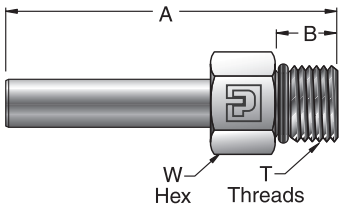

Parker Part No.	Inches						Working MAWP Pressure (PSIG)
	MPI™ Tube Stub	SAE Oring End	A	B	T Thread	W Hex	
4-4 T7HOA*	1/4	1/4	2.25	.43	7/16 - 20	9/16	12,500
4-6 T7HOA*	1/4	3/8	2.35	.47	9/16 - 18	11/16	12,500
4-8 T7HOA*	1/4	1/2	2.49	.55	3/4 - 16	7/8	12,500
6-4 T7HOA*	3/8	1/4	2.48	.43	7/16 - 20	9/16	12,500
6-6 T7HOA*	3/8	3/8	2.58	.47	9/16 - 18	11/16	12,500
6-8 T7HOA*	3/8	1/2	2.72	.55	3/4 - 16	7/8	12,500
8-4 T7HOA*	1/2	1/4	2.75	.43	7/16 - 20	9/16	12,500
8-6 T7HOA*	1/2	3/8	2.85	.47	9/16 - 18	11/16	12,500
8-8 T7HOA*	1/2	1/2	2.99	.55	3/4 - 16	7/8	12,500
9-4 T7HOA*	9/16	1/4	2.81	.43	7/16 - 20	5/8	12,500
9-6 T7HOA*	9/16	3/8	2.91	.47	9/16 - 18	11/16	12,500
9-8 T7HOA*	9/16	1/2	3.05	.55	3/4 - 16	7/8	12,500

* Add to the part number either **-SS** or **-2507** depending on selected material. (Example: **16-16 FBMP7-SS**)

** All male o-ring ends for MPI™ fittings are heavy duty and comply with SAE J1926-2. This end has maximum thread engagement for strength and requires the minimum full thread engagement specified in SAE J9126 for the female port. Standard O-ring material is Nitrile #N0552-90.

Add "**-Z6**" to part number for part assembled with preset ferrules and nuts.
Dimensions in inches are for reference only, subject to change.

M40HBMP7

Type “M” High Pressure Hose to MPI™ Connector

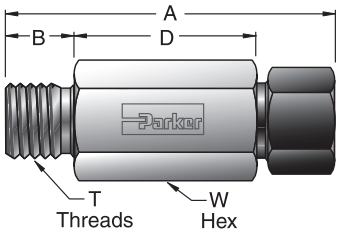

	Inches							Working MAWP Pressure (PSIG)	-XF Option (PSIG)
Parker Part No.	Hose** Adapter	MPI™ Size	A	B	D	T Thread	W Hex		
6-4 M40HBMP7*	-6	1/4	2.03	.50	1.03	9/16 - 18	5/8	15,000	-
6-6 M40HBMP7*	-6	3/8	2.45	.50	1.32	9/16 - 18	3/4	15,000	-
8-6 M40HBMP7*	-8	3/8	2.57	.63	1.32	3/4 - 16	13/16	15,000	-
8-8 M40HBMP7*	-8	1/2	2.90	.63	1.59	3/4 - 16	3/4 -16	15,000	-
8-9 M40HBMP7*	-8	9/16	2.97	.63	1.59	3/4 - 16	1-1/16	15,000	-
10-4 M40HBMP7*	-10	1/4	2.39	.75	1.14	7/8 - 14	15/16	15,000	-
10-6 M40HBMP7*	-10	3/8	2.72	.75	1.34	7/8 - 14	15/16	15,000	-
11-8 M40HBMP7*	-11	1/2	2.89	.63	1.58	1 - 12	1-1/16	15,000	-
11-9 M40HBMP7*	-11	9/16	2.95	.63	1.58	1 - 12	1-1/16	15,000	-
11-12 M40HBMP7*	-11	3/4	3.59	.63	2.08	1 -12	1-3/8	15,000	15,000
16-16 M40HBMP7*	-16	1	3.88	.63	2.13	1-5/16 -12	1-3/4	12,500	15,000

* Add to the part number either **-SS** or **-2507** depending on selected material. (Example: **16-16 FBMP7-SS**)
** Adapts to Type “M” Swivel Hose Connection.
Dimensions in inches are for reference only, subject to change.

M40HX44

Type “M” Male by X44 Male

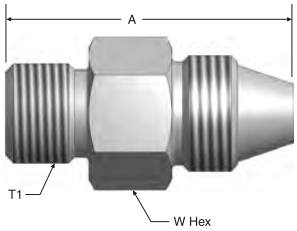

Note:
See page 81 for X44 port dimensions and assembly torque

	Inches					Working MAWP Pressure (PSIG)
Parker Part No.	Hose* Adapter	X44 Adapter	T1 “M” Thread	A	W Th’k	
6-6 M40HX44*	-6	3/8	9/16 - 18 UNF	1.77	11/16	15,000
6-9 M40HX44*	-6	9/16	9/16 - 18 UNF	1.79	1	15,000
6-12 M40HX44*	-6	3/4	9/16 - 18 UNF	2.06	1-1/4	15,000
8-9 M40HX44*	-8	9/16	3/4 - 16 UNF	1.99	1	15,000
8-12 M40HX44*	-8	3/4	3/4 - 16 UNF	2.18	1-1/4	15,000
11-9 M40HX44*	-11	9/16	1 - 12 UNF	2.04	1-1/16	15,000
11-12 M40HX44*	-11	3/4	1 - 12 UNF	2.18	1-1/4	15,000

* Add to the part number either **-SS** or **-2507** depending on selected material. (Example: **16-16 FBMP7-SS**)
Dimensions in inches are for reference only, subject to change.
Adapts to Type “M” Swivel Hose Connection

Tel: +45 63 12 83 00 | Email: ps@hymatik.com | www.hymatik.com | Hvidkaervej 27a, DK-5250 Odense SV, Denmark

Parker MPI™ Medium Pressure Products

M40HT7

Type "M" High Pressure Hose Adapter to MPI™ Tube Stub

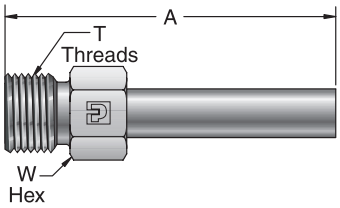

Parker Part No.	Inches					Working MAWP Pressure (PSIG)	-XF Option (PSIG)
	Hose* Adapter Size	MPI™ Tube Stub	A	T Thread	W Hex		
6-4 M40HT7*	-6	1/4	2.31	9/16 - 18	5/8	15,000	-
6-6 M40HT7*	-6	3/8	2.55	9/16 - 18	5/8	15,000	-
8-6 M40HT7*	-8	3/8	2.74	3/4 - 16	13/16	15,000	-
8-9 M40HT7*	-8	9/16	3.12	3/4 - 16	13/16	15,000	-
11-6 M40HT7*	-11	3/8	2.99	1 - 12	1-1/16	15,000	-
11-9 M40HT7*	-11	9/16	3.31	1 - 12	1-1/16	15,000	-
11-12 M40HT7*-SS	-11	3/4	3.66	1 - 12	1-1/16	15,000	-
11-12 M40HT7-2507-Z6-XF	-11	3/4	3.66	1 - 12	1-1/16	NA	15,000
16-12 M40HT7*-SS	-16	3/4	3.91	1-5/16 - 12	1-3/8	15,000	-
16-12 M40HT7-2507-Z6-XF	-16	3/4	3.91	1-5/16 - 12	1-3/8	NA	15,000
16-16 M40HT7*-SS	-16	1	4.51	1-5/16 - 12	1-3/8	12,500	-
16-16 M40HT7-2507-Z6-XF	-16	1	4.51	1-5/16 - 12	1-3/8	NA	15,000

* Add to the part number either **-SS** or **-2507** depending on selected material. (Example: **16-16 FBMP7-SS**)
Add "**-Z6**" to part number for part assembled with preset ferrules and nuts.
Sizes 12 & 16 come pre-assembled with **-XF** and **-Z6** Options
Adapts to Type "M" Swivel Hose Connection
Dimensions in inches are for reference only, subject to change.

MP7PC

MPI™ Port Connector

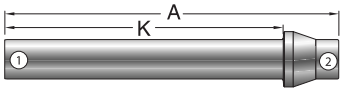

Parker Part No.	Inches				Working MAWP Pressure (PSIG)	-XF Option (PSIG)
	MPI™ Tube Stub #1	MPI™ Tube Stub #2[1]	A	K		
4-4 MP7PC*	1/4	1/4	2.69	2.23	15,000	-
4-6 MP7PC*	1/4	3/8	2.93	2.40	15,000	-
6-6 MP7PC*	3/8	3/8	3.17	2.64	15,000	-
6-8 MP7PC*	3/8	1/2	3.43	2.68	15,000	-
6-9 MP7PC*	3/8	9/16	3.50	2.75	15,000	-
8-8 MP7PC*	1/2	1/2	3.70	2.95	15,000	-
9-9 MP7PC*	9/16	9/16	3.82	3.07	15,000	-
9-12 MP7PC*	9/16	3/4	4.17	3.32	15,000	-
12-12 MP7PC*-SS	3/4	3/4	4.52	3.67	15,000	-
12-12 MP7PC-2507-Z6-XF	3/4	3/4	4.52	3.67	NA	15,000
12-16 MP7PC*-SS	3/4	1	5.12	4.07	12,500	-
12-16 MP7PC-2507-Z6-XF	3/4	1	5.12	4.07	12,500	15,000
16-16 MP7PC*-SS	1	1	5.74	4.70	12,500	-
16-16 MP7PC-2507-Z6-XF	1	1	5.74	4.70	NA	15,000

* Add to the part number either **-SS** or **-2507** depending on selected material. (Example: **16-16 FBMP7-SS**)
Add "**-Z6**" to part number for part assembled with preset ferrules and nuts.
[1] Assemble 1/4 to 1/2 turn from finger tight.
Dimensions in inches are for reference only, subject to change.

MPI™ Medium Pressure Products

Parker

X47HT7

Medium Pressure Port Connector to MPI™ Tube Stub

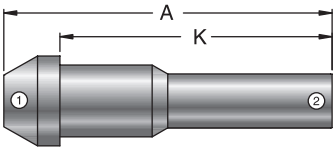

X47 Assemby Torque	Orifice (inches)
9=55 ft-lb.	.359
12=75 ft-lb.	.516
16=135 ft-lb.	.688

Parker Part No.	Inches				Working MAWP Pressure (PSIG)	-XF Option (PSIG)
	MP Port Connector #1	MPI™ Tube Stub #2	A	K		
9-6 X47HT7*	9/16	3/8	3.21	1.61	15,000	-
9-9 X47HT7*	9/16	9/16	3.53	3.03	15,000	-
12-9 X47HT7*	3/4	9/16	3.72	1.94	15,000	-
12-12 X47HT7*	3/4	3/4	4.07	3.44	15,000	-
16-9 X47HT7*	1	9/16	4.23	3.44	15,000	-
16-12 X47HT7*	1	3/4	4.57	3.79	15,000	15,000
16-16 X47HT7*	1	1	5.19	4.41	12,500	15,000

* Add to the part number either **-SS** or **-2507** depending on selected material. (Example: **16-16 FBMP7-SS**)
End # 1 must be used with a Medium Pressure Gland.
Add "**-Z6**" to part number for part assembled with preset ferrules and nuts.
Sizes 12 & 16 in 2507 come pre-assembled with **-XF** and **-Z6** Options
Dimensions in inches are for reference only, subject to change.

PNBMP7

MPI™ Cap

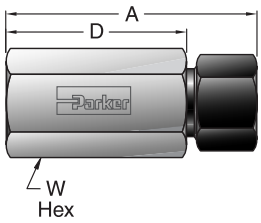

Parker Part No.	Inches				Working MAWP Pressure (PSIG)	-XF Option (PSIG)
	MPI™ Size	A	D	W Hex		
4 PNBMP7*	1/4	1.69	1.19	5/8	15,000	-
6 PNBMP7*	3/8	2.12	1.49	3/4	15,000	-
8 PNBMP7*	1/2	2.62	1.93	1	15,000	-
9 PNBMP7*	9/16	2.75	2.00	1-1/16	15,000	-
10 PNBMP7*	5/8	2.86	2.11	1-3/16	15,000	-
12 PNBMP7*	3/4	3.53	2.64	1-3/8	15,000	15,000
16 PNBMP7*	1	4.44	3.31	1-3/4	12,500	15,000

* Add to the part number either **-SS** or **-2507** depending on selected material. (Example: **16-16 FBMP7-SS**)
Dimensions in inches are for reference only, subject to change.

FNMP7

MPI™ Plug, Assembly

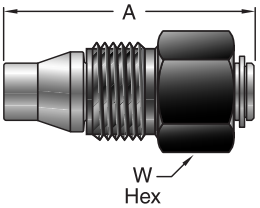

Parker Part No.	Inches			Working MAWP Pressure (PSIG)
	MPI™ Size	A	W Hex	
4 FNMP7*	1/4	1.41	9/16	15,000
6 FNMP7*	3/8	1.65	11/16	15,000
8 FNMP7*	1/2	1.94	15/16	15,000
9 FNMP7*	9/16	2.00	1	15,000
12 FNMP7*	3/4	2.35	1-1/4	15,000
16 FNMP7*	1	2.96	1-1/2	15,000

* Add to the part number either **-SS** or **-2507** depending on selected material. (Example: **16-16 FBMP7-SS**)
Assemble 1/4 to 1/2 turn from finger tight.
Dimensions in inches are for reference only, subject to change.
FNMP7 Replaces FNM7

MPI™ Medium Pressure Products

BMP7

MPI™ Nut

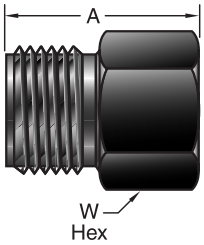

	Inches		
Parker Part No.	MPI™ Size	A	W Hex
4 BMP7*	1/4	0.81	9/16
6 BMP7*	3/8	0.92	11/16
8 BMP7*	1/2	0.97	15/16
9 BMP7*	9/16	1.03	1
10 BMP7*	5/8	1.13	1-1/16
12 BMP7*	3/4	1.34	1-1/4
16 BMP7*	1	1.74	1-1/2

* Add to the part number either **-SS** or **-2507** depending on selected material. (Example: **16-16 FBMP7-SS**)
Dimensions in inches are for reference only, subject to change.

MPFF*

MPI™ Front Ferrule

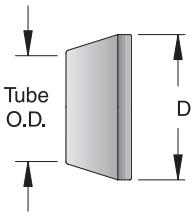

MPBF*

MPI™ Back Ferrule

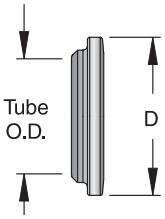

	Inches		
Parker Part No.	Tube O.D.	Ferrule Sets Per Holder *	MPFF and MPBF Ferrule O.D.
4 MPI-SS-Set	1/4	8	0.40
6 MPI-SS-Set	3/8	8	0.52
8 MPI-SS-Set	1/2	8	0.72
9 MPI-SS-Set	9/16	8	0.78
10 MPI-SS-Set	5/8	8	0.84
12 MPI-SS-Set	3/4	8	0.99
16 MPI-SS-Set	1	8	1.30
12 MPI-XF-Set	3/4	8	0.99
16 MPI-XF-Set	1	8	1.30

* Ferrules are sold in Sets and are shipped in Gang of 8 on a plastic holder.

Tel: +45 63 12 83 00 | Email: ps@hymatik.com | www.hymatik.com | Hvidkaervej 27a, DK-5250 Odense SV, Denmark

MAN Series Needle Valves with MPI™ Style Connections

Pressures to 15,000 psi (1034 bar)

Parker MAN series needle valves with MPI™ tube connections are designed for multi-turn control of liquid or gas media with regulation or shutoff options for pressures up to 15,000 psi. This Double Ferrule connection delivers fast, easy make-up and reliable bubble-tight performance in either liquid or gas service. Valves are built for MPI™ tube sizes from 1/4" to 1" and include five different body patterns providing many control options.

Features:

- Valve flow capabilities closely match associated tubing bore sizes
- CW 316 Stainless Steel Material is Standard, 2507 Annealed Super Duplex as option
- Rising stem/barstock body design
- Non-rotating stem prevents stem/seat galling
- Metal-to-metal seating achieves bubble-tight shut-off, longer stem/seat life in abrasive flow, greater durability for repeated on/off cycles, unmatched temperature performance and excellent corrosion resistance
- Temperature range from -423°F (-252°C) to 1000°F (538°C)
- Standard PTFE packing provides dependable stem and body sealing from -423°F to 450°F, additional options include PTFE/Glass (25%) for temperatures to 600°F and Graphite Yarn for temperatures to 1000°F
- Choice of Vee (shutoff) or Regulating Flow Stem Tips
- Replaceable Seat Option available with Right Angle 2-way body style
- Optional N-Dura Stem and Seat Coating or Stellite material option for severe service available



MAN Series Needle Valve with MPI Connections

Parker MPI™ Connection Benefits:

MPI™ Connections are designed for both liquids and gases. They can be used on MPI™ 1/8th Hard tubing, Autoclave Engineers Medium Pressure Tubing, or Thick Wall Instrumentation Tubing in both 316 SS and 2507 Super Duplex materials.

- **Suparcase® Technology** creates a Corrosion Resistant Ferrule set for a strong, mechanical hold
- **Double Ferrule** design is proven but not interchangeable with standard tube fittings
- **Longer Thread Engagement** improves resistance to pressure and load on ferrules
- **Molybdenum Disulfide Coated Gland Nut** prevents galling and makes assembly easier.



MAN Series Needle Valve Extreme Temperature shown with "**-VT**" (Vent) option

Tel: +45 63 12 83 00 | Email: ps@hymatik.com | www.hymatik.com | Hvidkaervej 27a, DK-5250 Odense SV, Denmark

Parker MPI™ Medium Pressure Products

MAN Series Medium Pressure Needle Valves

(Replaces MPN Series Valves)

Standard packing materials allow service temperatures from -100°F (-73°C) to 450°F (232°C), optional materials service from -423°F (-252°C) to 1000°F (538°C). Critical service design features include packing below the stem thread and the non-rotating stem design ensures longer life in rugged conditions. MPI™ valves are available in two materials, CW 316 SS and 2507 Super Duplex.

MPI™ Medium Pressure Valve Connection Designation

Valve Connection	Description	Drawing
MP7	Parker MPI™ (Medium Pressure Inverted) To 15,000 PSI	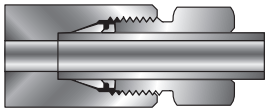

Selections "F" NPT Valves and "MF" Medium Pressure C&T Valves from previous MPI™ catalog are now supplied from the Parker Autoclave Engineers product catalogs: "P" Series and "20SM" Series Needle Valve brochures.

Material of Construction

Item#	Description	Material
1	Low Friction Packing Gland	Ampco 45
2	Panel Mount Option	316 SS
❸	Packing Washer	Ampco 45
❹	Bottom Washer	316 SS
5	Valve Body	316 SS
6	Pan Head Screw 10-24 x 1/4"	18-8 SS
❼	Metal to Metal Seating	316 SS
❽	Adjustable Packing	PTFE
9	One Piece Stem	316 SS
10	Locking Device	302 SS
11	Powder Coated Handle	316 SS
⓬	Stem Sleeve	304 SS
⓭	Hex Nuts	300 Series SS
⓮	Thrust Washer	17-4PH
●	Replaceable Seat (version only)	17-4PH

❶ Typical spare parts found in Repair Kit

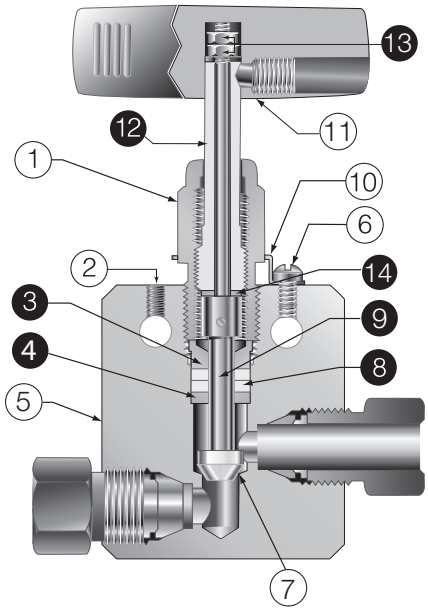

Inlet is typically under the seat (from left side in drawing above) however valve can be used bi-directionally. Inlet is shown to keep pressure trapped under seat in closed position (preferred).

Panel Hole Sizes

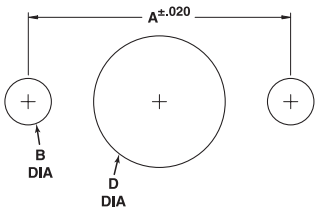

Needle Valve Panel Mount

	Inches			
Valve Size	A	B	Screw Size	D
4 & 6	1.25	.22	10 - 24	.75
8 & 9	1.375	.22	10 - 24	1.00
12	1.75	.22	10 - 24	1.12
16	2.50	.22	10 - 24	1.62

Two Way Inline Valves

Generalized Flow Coefficient Curves (C_V)

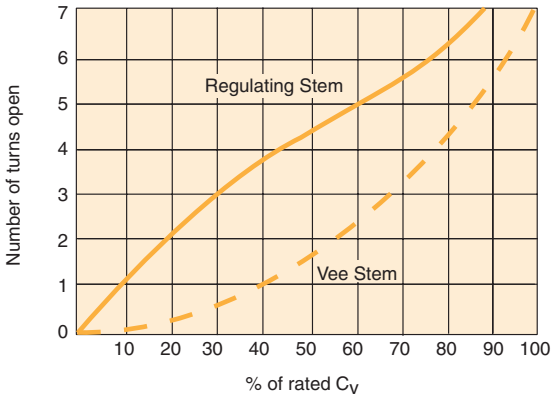

Basic Repair Kits (316 SS)

Pick Repair Kit by matching size ie; R4 = 1/4", and add packing/temp/material suffix if other than standard 316SS & PTFE (T)

Repair kits for LB, AB, XBI, XBO (V-Stem Versions)
R4MANB, R6MANB, R8MANB, R9MANB, R12MANB, R16MANB

Repair kits for LR, AR, XRI, XRO (Regulating-Stem Versions)
R4MANR, R6MANR, R8MANR, R9MANR, R12MANR, R16MANR

Repair kits for XBD 3-way 2-stem Valves (V-Stem versions)
R4MANXBD, R6MANXBD, R8MANXBD, R9MANXBD, R12MANXBD, R16MANXBD

Repair kits for XRD 3-way 2-stem Valves (Regulating-Stem versions)
R4MANXRD, R6MANXRD, R8MANXRD, R9MANXRD, R12MANXRD, R16MANXRD

Repair kits for ABR 2-way Replaceable Seat Valves (V-Stem versions)
R4MANABR, R6MANABR, R8MANABR, R9MANABR, R12MANABR, R16MANABR

Repair kits for ARR 2-way Replaceable Seat Valves (Regulating-Stem versions)
R4MANARR, R6MANARR, R8MANARR, R9MANARR, R12MANARR, R16MANARR

Consult your Parker representative for other material kit numbers, and pricing. Visit www.autoclave.com for product Operation manuals.

How to Order MAN Series Needle Valves

The correct part number is easily derived from the following example and ordering chart. The eight product characteristics required are coded as shown in the chart.

The following example describes an MAN Series needle valve with 1/4" MPI™ connections, 2 way angle flow path, blunt (VEE) stem, PTFE packing, a stainless steel body and the option for cryogenic trim materials

Typical part number example: **4MP7-MANAB-T-SS-LTB** (part number is created based on customer selection of product parameters, see below for example)

4	MP7	-	MAN	A	B	-	T	-	SS	-	LTB
Inlet/Outlet Connection Size	Connection Type		Valve Series	Valve Type	Stem Type		Packing Material		Body Material		Options
4 = 1/4" **6** = 3/8" **8** = 1/2" **9** = 9/16" **12** = 3/4" **16** = 1"	**MP7** = Parker MPI™		**MAN**	**L** = 2 Way Inline **A** = 2 Way Angle **X***I** = 3 Way, 2 Pressure Connections **X***D** = 3 Way, 2 Stem Connection **A***R** = 2 Way Angle (replaceable seat) **X***O** = 3 Way, 1 Pressure Connection (*** Insert Stem Type)	**B** = Blunt (Vee) **R** = Regulating		**T** = PTFE (Standard) **TG** = PTFE Glass (use with **HYG** option) **GY** = Graphite Yarn		**SS** = Stainless Steel **2507** = Super Duplex		**LTB** = Cryogenic (-100° to 0°F) **LT**= Low Temp. Ext. (-100 to -423°F) **HT**= High Temp. Ext. (800° to 1000°F) **PM**= Panel Mount **HYG**= Hydrogen/Helium Service **XF**= High Strength Ferrules (sizes 12 & 16 only) **LD**= Lockout Device (clamshell)

Extreme Temperature Options:

Standard valves using PTFE packing (code "T") may be operated from -100ºF (-73ºC) to 450ºF (232ºC). High and Cryogenic temperature packing and/or extended stuffing box are available for service from -423ºF (-252ºC) to 1000ºF (538ºC) by adding the following suffixes to catalog order number: (Note: Use code "T" packing with "LTB" and "LT" Cryogenic options)

-LTB = Standard valve with Cryogenic trim materials and PTFE packing to -100ºF (-73ºC)

-LT = Extended stuffing box valve with PTFE packing and Cryogenic trim materials to -423ºF (-252ºC) (adds 3.5" to overall height of valve) use when temperature is below -100ºF

-TG = Standard valve with PTFE-Glass packing from -100ºF (-73ºC) to 600ºF (316ºC)

-GY = Standard valve with Graphite Braided Yarn packing to 800ºF (427ºC). Use when selecting HT option.

(Note: 3/4" valve rated 8000 psi (552 bar) and 1" rated 6000 psi (412 bar) max with Graphite Yarn packing)

-HT = Extended stuffing box valve with Graphite Braided Yarn packing to 1000ºF (538ºC) (adds 3.5" to overall height of valve) use when temperature exceeds 800ºF

Tel: +45 63 12 83 00 | Email: ps@hymatik.com | www.hymatik.com | Hvidkaervej 27a, DK-5250 Odense SV, Denmark

MPI™ Medium Pressure Products

Two Way Inline Valves

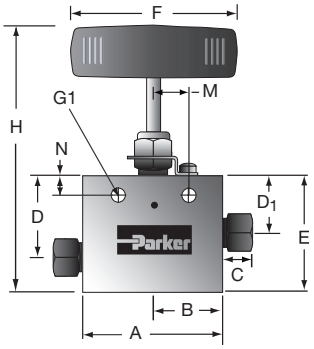

Notes:
G1 = Bracket mounting hole size
H = Dimension with stem in closed position
Panel Mount Template and drill sizes on Page 34

Rated Cv 2-Way (Inline)	
4MP7	0.31
6MP7	0.75
8MP7	1.3
9MP7	1.75
12MP7	2.8
16MP7	5.2

Parker Part No.	PSI	Connection	Inches												
			Orifice	A	B	C	D	D1	E	F	G1	H	M	N	Block Thick.
4MP7-MANLB-T-SS	15,000	1/4" MPI	.125	2.50	1.25	0.50	1.63	1.19	2.13	3.00	0.22	4.60	0.63	0.38	1.00
6MP7-MANLB-T-SS	15,000	3/8" MPI	.219	2.50	1.25	0.63	1.63	1.19	2.13	3.00	0.22	4.60	0.63	0.38	1.00
8MP7-MANLB-T-SS	15,000	1/2" MPI	.312	3.00	1.50	0.69	2.38	1.75	3.00	4.00	0.34	6.00	0.69	0.50	1.38
9MP7-MANLB-T-SS	15,000	9/16" MPI	.359	3.00	1.50	0.75	2.38	1.75	3.00	4.00	0.34	6.00	0.69	0.50	1.38
12MP7-MANLB-T-SS	15,000	3/4" MPI	.516	4.12	2.06	0.88	3.00	2.25	3.75	10.35	0.44	6.92	0.88	0.62	1.75
16MP7-MANLB-T-SS	12,500	1" MPI	.688	4.75	2.38	1.13	3.75	2.81	4.75	10.35	0.56	8.74	1.25	1.13	2.00

For 2507 Super Duplex option, replace **-SS** with **-2507** and use **-XF** ferrule sets for sizes 12 and 16
Dimensions in inches are for reference only, subject to change.

Two Way Angle Valves

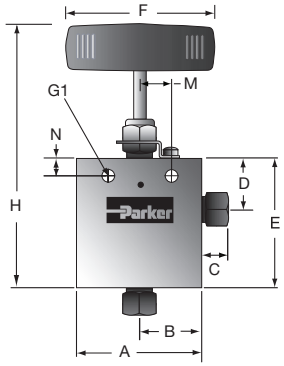

Notes:
G1 = Bracket mounting hole size
H = Dimension with stem in closed position
Panel Mount Template and drill sizes on Page 34

Rated Cv 2-Way (Angle)	
4MP7	0.47
6MP7	1.2
8MP7	1.95
9MP7	2.63
12MP7	4.2
16MP7	7.8

Parker Part No.	PSI	Connection	Inches											
			Orifice	A	B	C	D	E	F	G1	H	M	N	Block Thick.
4MP7-MANAB-T-SS	15,000	1/4" MPI	.125	2.50	1.25	0.50	1.19	2.57	3.00	0.22	5.00	0.63	0.38	1.00
6MP7-MANAB-T-SS	15,000	3/8" MPI	.219	2.50	1.25	0.63	1.19	2.57	3.00	0.22	5.00	5.00	0.38	1.00
8MP7-MANAB-T-SS	15,000	1/2" MPI	.312	3.00	1.50	0.69	1.75	3.58	4.00	0.34	6.60	0.69	0.50	1.38
9MP7-MANAB-T-SS	15,000	9/16" MPI	.359	3.00	1.50	0.75	1.75	3.58	4.00	0.34	6.60	0.69	0.50	1.38
12MP7-MANAB-T-SS	15,000	3/4" MPI	.516	4.12	2.06	0.88	2.25	4.25	10.35	0.44	7.42	0.88	0.62	1.75
16MP7-MANAB-T-SS	12,500	1" MPI	.688	4.75	2.38	1.13	2.81	5.44	10.35	0.56	9.43	1.25	1.13	2.00

For 2507 Super Duplex option, replace **-SS** with **-2507** and use **-XF** ferrule sets for sizes 12 and 16
Dimensions in inches are for reference only, subject to change.

Three Way/Two Pressure Connections

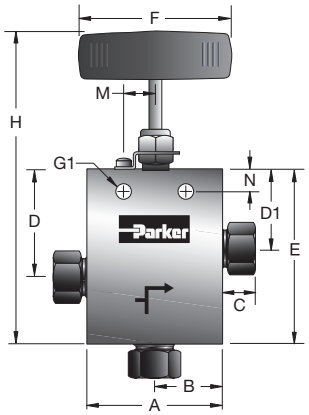

Notes:
G1 = Bracket mounting hole size
H = Dimension with stem in closed position
Panel Mount Template and drill sizes on Page 34

Rated Cv 3-Way/2 on Pressure (Angle)	
4MP7	0.47
6MP7	1.2
8MP7	1.95
9MP7	2.63
12MP7	4.2
16MP7	7.8

Parker Part No.	PSI	Connection	Inches												
			Orifice	A	B	C	D	D1	E	F	G1	H	M	N	Block Thick.
4MP7-MANXBI-T-SS	15,000	1/4" MPI	0.125	2.50	1.25	0.50	1.63	1.19	2.84	3.00	0.22	5.30	0.63	0.38	1.00
6MP7-MANXBI-T-SS	15,000	3/8" MPI	0.219	2.50	1.25	0.63	1.63	1.19	2.84	3.00	0.22	5.30	0.63	0.38	1.00
8MP7-MANXBI-T-SS	15,000	1/2" MPI	0.312	3.00	1.50	0.69	2.38	1.75	3.88	4.00	0.34	6.90	0.69	0.50	1.38
9MP7-MANXBI-T-SS	15,000	9/16" MPI	0.359	3.00	1.50	0.75	2.38	1.75	3.88	4.00	0.34	6.90	0.69	0.50	1.38
12MP7-MANXBI-T-SS	15,000	3/4" MPI	0.516	4.12	2.06	0.88	3.00	2.25	5.00	10.35	0.44	8.17	0.88	0.62	1.75
16MP7-MANXBI-T-SS	12,500	1" MPI	0.688	4.75	2.38	1.13	3.75	2.82	6.38	10.35	0.56	10.37	1.25	1.13	2.00

For 2507 Super Duplex option, replace **-SS** with **-2507** and use **-XF** ferrule sets for sizes 12 and 16
Dimensions in inches are for reference only, subject to change.

Three Way/One Pressure Connections

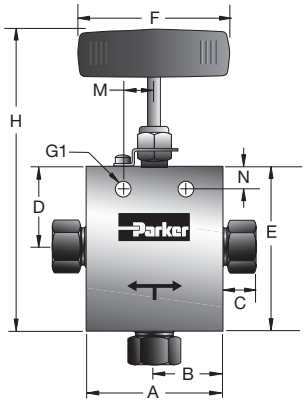

Notes:
G1 = Bracket mounting hole size
H = Dimension with stem in closed position
Panel Mount Template and drill sizes on Page 34

Rated Cv 3-Way/1 on Pressure (Angle)	
4MP7	0.47
6MP7	1.2
8MP7	1.95
9MP7	2.63
12MP7	4.28
16MP7	7.8

Parker Part No.	PSI	Connection	Inches											
			Orifice	A	B	C	D	E	F	G1	H	M	N	Block Thick.
4MP7-MANXBO-T-SS	15,000	1/4" MPI	0.125	2.50	1.25	0.50	1.19	2.57	3.00	0.22	5.00	0.63	0.38	1.00
6MP7-MANXBO-T-SS	15,000	3/8" MPI	0.219	2.50	1.25	0.63	1.19	2.57	3.00	0.22	5.00	5.00	0.38	1.00
8MP7-MANXBO-T-SS	15,000	1/2" MPI	0.312	3.00	1.50	0.69	1.75	3.63	4.00	0.34	6.60	0.69	0.50	1.38
9MP7-MANXBO-T-SS	15,000	9/16" MPI	0.359	3.00	1.50	0.75	1.75	3.63	4.00	0.34	6.60	0.69	0.50	1.38
12MP7-MANXBO-T-SS	15,000	3/4" MPI	0.516	4.12	2.06	0.88	2.25	4.25	10.35	0.44	7.42	0.88	0.62	1.75
16MP7-MANXBO-T-SS	12,500	1" MPI	0.688	4.75	2.38	1.13	2.81	5.44	10.35	0.56	9.43	1.25	1.13	2.00

For 2507 Super Duplex option, replace **-SS** with **-2507** and use **-XF** ferrule sets for sizes 12 and 16
Dimensions in inches are for reference only, subject to change.

Tel: +45 63 12 83 00 | Email: ps@hymatik.com | www.hymatik.com | Hvidkaervej 27a, DK-5250 Odense SV, Denmark

MPI™ Medium Pressure Products

Three Way/Two Stem Connections

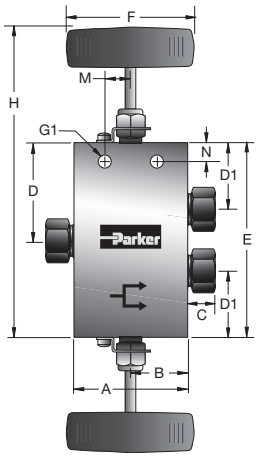

Notes:
G1 = Bracket mounting hole size
H = Dimension with stem in closed position
Panel Mount Template and drill sizes on Page 34

Rated Cv 3-Way/2 Stem Manifold (Inline)	
4MP7	0.31
6MP7	0.75
8MP7	1.3
9MP7	1.75
12MP7	2.8
16MP7	5.2

Parker Part No.	PSI	Connection	Inches													
			Orifice	A	B	C	D	D1	E	F	G1	H	M	N	Block Thick.
4MP7-MANXBD-T-SS	15,000	1/4" MPI	0.125	2.50	1.25	0.50	1.69	1.19	3.38	3.00	0.22	5.84	0.63	0.38	1.00
6MP7-MANXBD-T-SS	15,000	3/8" MPI	0.219	2.50	1.25	0.63	1.69	1.19	3.38	3.00	0.22	5.84	0.63	0.38	1.00
8MP7-MANXBD-T-SS	15,000	1/2" MPI	0.312	3.00	1.50	0.69	2.57	1.75	5.13	4.00	0.34	8.12	0.69	0.50	1.38
9MP7-MANXBD-T-SS	15,000	9/16" MPI	0.359	3.00	1.50	0.75	2.57	1.75	5.13	4.00	0.34	8.12	0.69	0.50	1.38
12MP7-MANXBD-T-SS	15,000	3/4" MPI	0.516	4.12	2.06	0.88	3.25	2.25	6.50	10.35	0.44	9.67	0.88	0.62	1.75
16MP7-MANXBD-T-SS	12,500	1" MPI	0.688	4.75	2.38	1.13	4.13	2.81	8.25	10.35	0.56	12.24	1.25	1.13	2.00

For 2507 Super Duplex option, replace **-SS** with **-2507** and use **-XF** ferrule sets for sizes 12 and 16. Dimensions in inches are for reference only, subject to change.

Two Way Angle Valves (Replaceable Seat)

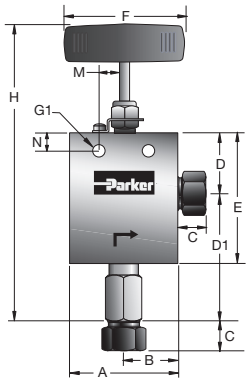

Notes:
G1 = Bracket mounting hole size
H = Dimension with stem in closed position
Panel Mount Template and drill sizes on Page 34

Rated Cv 2-Way Replaceable Seat (Angle)	
4MP7	0.47
6MP7	1.2
8MP7	1.95
9MP7	2.63
12MP7	4.2
16MP7	7.8

Parker Part No.	PSI	Connection	Inches													
			Orifice	A	B	C	D	D1	E	F	G1	H	M	N	Block Thick.
4MP7-MANABR-T-SS	15,000	1/4" MPI	0.125	2.50	1.25	0.50	1.19	2.32	2.25	3.00	0.22	5.94	0.63	0.38	1.00
6MP7-MANABR-T-SS	15,000	3/8" MPI	0.219	2.50	1.25	0.63	1.19	2.49	2.25	3.00	0.22	6.13	0.63	0.38	1.00
8MP7-MANABR-T-SS	15,000	1/2" MPI	0.312	3.00	1.50	0.69	1.63	3.18	3.12	4.00	0.34	7.80	0.69	0.50	1.38
9MP7-MANABR-T-SS	15,000	9/16" MPI	0.359	3.00	1.50	0.75	1.63	3.18	3.12	4.00	0.34	7.80	7.80	0.50	1.38
12MP7-MANABR-T-SS	15,000	3/4" MPI	0.516	4.12	2.06	0.88	2.25	3.88	4.25	10.35	0.44	9.30	0.88	0.62	1.75
16MP7-MANABR-T-SS	12,500	1" MPI	0.688	4.75	2.38	1.13	2.69	4.94	5.25	10.35	0.56	11.62	1.25	1.13	2.00

For 2507 Super Duplex option, replace **-SS** with **-2507** and use **-XF** ferrule sets for sizes 12 and 16. Dimensions in inches are for reference only, subject to change.

MAN Series Actuators - Pneumatic, Piston Style

The need to control process and vent valves from a remote location makes air operated (pneumatic) valves a vital component to many process applications.

All MAN Series needle valves with MPI™ connections are available with Fail Open (-FO) or Fail Closed (-FC) Piston Type Actuators. Four sizes of air actuators (Medium, Heavy, Extra Heavy-Single Stage, and Extra Heavy-Two Stage) are offered to meet the service requirements of Parker MAN Series Needle Valves. Both Fail Closed (normally closed) and Fail Open (normally open) designs have overlapping piston sizes to help meet efficiency or economical requirements.

Actuators are available for Outdoor Service. These operators provide corrosion resistant components and prevent the ingress of outside elements and moisture. Limit Switch position location and Solenoid activation are available upon request.

Features and Benefits

- Fail Open or Fail Close with spring return
- Piston actuator sizing incorporates maximum allowable air pressure of 100 psi
- Yoke design for separation of process and air pressure
- Stem Position Indicator is standard
- Anodized Aluminum Housing (for corrosion and wear resistance)
- -20°F (-29°C) to 200°F (93°C) ambient temperature range (for operation below 30°F (-1°C) dry air must be used and heat tracing is recommended)
- Remote actuation and position indication options available



Fail Open - C1S Actuator shown

Remote On-Off

Parker MAN series air-operated needle valves (FC – Fail Close or FO-Fail Open) can be controlled by a 3-way manual air valve or by a low pressure solenoid valve. These can be actuated manually or remotely depending on application requirements.

Parker's MAN series air-operated high pressure valves permit process control from a remotely located panel without the necessity of piping high pressure lines to the control panel. Safety is greatly increased and process "hysteresis" is reduced. Prudent selection of FC or FO valves, together with the automated valve, permit the system design to "Fail Safe" in either the closed or open condition in the event of loss of air pressure, electrical failure, or malfunction.

Where explosion proof conditions are a requirement, pneumatically actuated valves should be considered. Remote mounting of the solenoid valve removes the potential from the hazardous area.

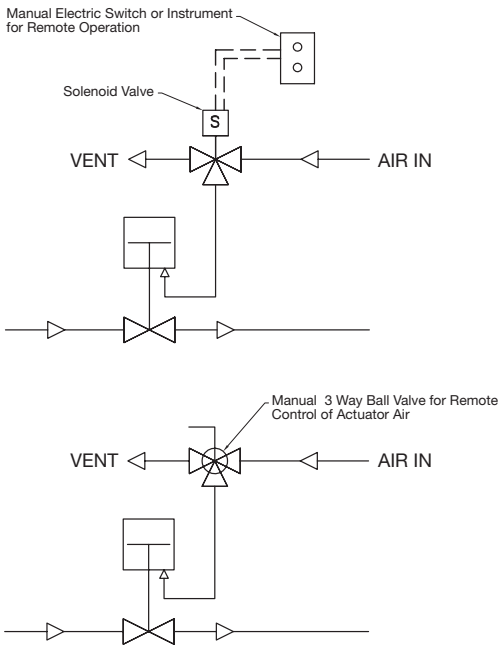

Tel: +45 63 12 83 00 | Email: ps@hymatik.com | www.hymatik.com | Hvidkaervej 27a, DK-5250 Odense SV, Denmark

MAN Series Actuators - Piston Style Actuators

Piston type air-operated valves offer a unique, reliable design providing for a long and dependable life. These valves are more compact than diaphragm valves and are appropriate for applications such as high-flow gas and liquid delivery systems to reactors and mixer/vaporizers.

Features and Benefits

- Fail-Open or Fail-Close with spring return
- Yoke design for separation of process and air pressure
- Ease of stem replacement
- Stem position indicator is standard
- High actuator cycle life
- 1/8" NPT air inlet connection standard except Extra Heavy Duty has 3/8" NPT

Air Operated Materials

Cylinder, Piston, Cover Plates, Spring Housing: Anodized aluminum (for corrosion and wear resistance).

Yoke: Painted Steel

Technical Data - Air Operator

- Maximum allowable working pressure: 100 psi (6.89 bar)
- Allowable piston temperature range: -20°F to 200°F (-29°C to 93°C), operating below 30ºF (-1.1ºC) with dry air only (heat trace may be needed for lower temperatures).
- Area of piston:
  Medium duty - 19.6 sq. in (126.5 sq. cm)
  Heavy duty - 39.2 sq. in (252.9 sq. cm)
  Extra Heavy duty single stage - 56 sq. in (361.3 sq. cm)
  Extra Heavy duty double stage - 112 sq. in (722.6 sq. cm)
- Approximate air usage/cycle @ 100 psi (6.89 bar):
  Medium duty - .04 SCF (.0011 SCM)
  Heavy duty - .08 SCF (.0022 SCM)
  Extra Heavy duty single stage - .33 SCF (.0095 SCM)
  Extra Heavy duty double stage - .67 SCF (.019 SCM)
- Life Cycle Tested to 100,000 cycles at 100 psi (6.89 bar) with no leakage or signs of wear or fatigue.

Note:
Fail Close = Air-to-Open
Fail Open = Air-to-Close

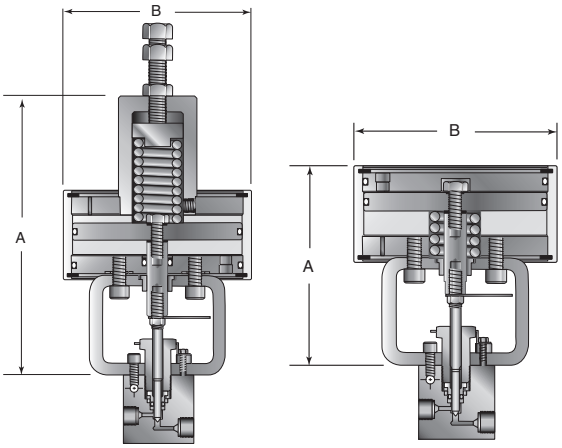

Fail Close Fail Open

NOTE: Air inlet for Fail Close operation is located in the back, opposite the front of valve. For other locations, consult factory. Holes supplied in yoke bracket for mounting.

Actuator Order Suffix				
Duty Rating	Type	Ordering Suffix	Dimensions: Inches/mm	
			A	B
Medium	Fail Close	O1S	8.3 (210)	5.7 (144)
	Fail Open	C1S	5.5 (139)	5.7 (144)
Heavy	Fail Close	O2S	10.2 (260)	5.7 (144)
	Fail Open	C2S	7.5 (190)	5.7 (144)
Extra Heavy Single Stage	Fail Close	HO1S	15.2 (385)	9.4 (240)
	Fail Open	HC1S	8.6 (218)	9.4 (240)
Extra Heavy Two Stage	Fail Close	HO2S	18.5 (470)	9.4 (240)
	Fail Open	HC2S	12.0 (303)	9.4 (240)

Outdoor Service Actuators		
Duty Rating	Type	Ordering Suffix
Medium	Fail Close	O1SOD
	Fail Open	C1SOD
Heavy	Fail Close	O2SOD
	Fail Open	C2SOD
Extra Heavy Single Stage	Fail Close	HO1SOD
	Fail Open	HC1SOD
Extra Heavy Two Stage	Fail Close	HO2SOD
	Fail Open	HC2SOD

Actuator Selection - Fail Open Type MAN Series Valves

Valve Series	Duty Rating	System Pressure KSI (bar)										
		1-3 (70-210)	4 (275)	6 (410)	8 (550)	10 (690)	12 (830)	14 (970)	15 (1035)	Max. Press. psi (bar)*	Stem Travel in (mm)	Flow C_V**
4MP7	Medium Duty C1S	40 (2.76)	40 (2.76)	40 (2.76)	40 (2.76)	50 (3.45)	60 (4.14)	70 (4.83)	80 (5.52)	15,000 (1035)	0.25 (6.35)	0.31
	Heavy Duty C2S	20 (1.38)	20 (1.38)	20 (1.38)	20 (1.38)	25 (1.72)	30 (2.07)	35 (2.41)	40 (2.76)			
6MP7	Medium Duty C1S	45 (3.10)	45 (3.10)	45 (3.10)	45 (3.10)	55 (3.79)	65 (4.48)	75 (5.17)	85 (5.86)	15,000 (1035)	0.25 (6.35)	0.75
	Heavy Duty C2S	25 (1.72)	25 (1.72)	25 (1.72)	25 (1.72)	30 (2.07)	35 (2.41)	40 (2.76)	45 (3.10)			
8MP7	Medium Duty C1S	60 (4.14)	60 (4.14)	65 (4.48)	80 (5.52)	100 (6.89)	-	-	-	10,700 (737)	0.38 (9.65)	1.30
	Heavy Duty C2S	30 (2.07)	30 (2.07)	30 (2.07)	40 (2.76)	50 (3.45)	55 (3.79)	60 (4.14)	70 (4.83)	15,000 (1035)		
	Extra Heavy Duty Single Stage HC1S	25 (1.72)	25 (1.72)	25 (1.72)	30 (2.07)	35 (2.41)	45 (3.10)	50 (3.45)	55 (3.79)	15,000 (1035)		
	Extra Heavy Duty Two Stage HC2S	15 (1.03)	15 (1.03)	15 (1.03)	15 (1.03)	20 (1.38)	20 (1.38)	25 (1.72)	25 (1.72)	15,000 (1035)		
9MP7	Medium Duty C1S	65 (4.48)	65 (4.48)	75 (5.17)	100 (6.89)	-	-	-	-	8,600 (593)	0.38 (9.65)	1.75
	Heavy Duty C2S	35 (2.41)	35 (2.41)	40 (2.76)	50 (3.45)	55 (3.79)	60 (4.14)	70 (4.83)	75 (5.17)	15,000 (1035)		
	Extra Heavy Duty Single Stage HC1S	30 (2.07)	30 (2.07)	30 (2.07)	35 (2.41)	45 (3.10)	50 (3.45)	55 (3.79)	60 (4.14)	15,000 (1035)		
	Extra Heavy Duty Two Stage HC2S	15 (1.03)	15 (1.03)	15 (1.03)	20 (1.38)	20 (1.38)	25 (1.72)	30 (2.07)	35 (2.41)	15,000 (1035)		
12MP7	Medium Duty C1S	90 (6.21)	100 (6.89)	-	-	-	-	-	-	4,800 (330)	0.44 (11.18)	2.80
	Heavy Duty C2S	45 (3.10)	45 (3.10)	60 (4.14)	80 (5.52)	100 (6.89)	-	-	-	10,000 (690)		
	Extra Heavy Duty Single Stage HC1S	35 (2.41)	35 (2.41)	50 (3.45)	60 (4.14)	70 (4.83)	80 (5.52)	95 (6.55)	100 (6.89)	15,000 (1035)		
	Extra Heavy Duty Two Stage HC2S	20 (1.38)	20 (1.38)	25 (1.72)	30 (2.07)	35 (2.41)	40 (2.76)	45 (3.10)	50 (3.45)	15,000 (1035)		
16MP7	Medium Duty C1S	100 (6.89)	-	-	-	-	-	-	-	2,800 (193)	0.56 (14.22)	5.20
	Heavy Duty C2S	60 (4.14)	70 (4.83)	100 (6.89)	-	-	-	-	-	6,300 (435)		
	Extra Heavy Duty Single Stage HC1S	45 (3.10)	50 (3.45)	70 (4.83)	95 (6.55)	-	-	-	-	8,500 (585)		
	Extra Heavy Duty Two Stage HC2S	25 (1.72)	25 (1.72)	35 (2.41)	45 (3.10)	55 (3.79)	65 (4.48)	-	-	12,500 (860)		

To select Needle Valve Actuator:

Example:

Need to know: Valve Model/Connection Size - **8MP7 Needle Valve**
Indoor or Outdoor Service - **Outdoor Servic**e
Maximum Operating Pressure: **Fluid - 12,000 psi**
Maximum Available Air Pressure - **60 psi**
Select Actuator Type (Fail Open or Fail Close) – **Fail Open Type**

Example: Using chart on page 41 (Fail Open Actuators), select **8MP7 Section**

Across top of chart, select **12 System Pressure** (12,000 psi max system pressure)
Go down that column to **8MP7 Section** to first row filled with number (air pressure)
First row with number is **55** – as your available **air pressure is 60 psi**, you do not have to go any further (if this number was more than 60, continue to next row)

This row (**Heavy Duty Actuator**) confirms that this actuator needs 55 psi to close the 8MP7 valve at 12,000 psi and you have 60 psi available.

Go to Ordering Suffix Charts on page 42 – find "**Heavy Duty**" Rating – "**Fail Open**" Select Suffix code = -C2SOD (OD = Outdoor) and add to Needle Valve Model Number.

Example: 8MP7-MANABR-T-SS-C2SOD

** C_V data is for 2-way straight valves.
For angle pattern, add approximately 50% to the C_V valve.

CAUTION: While testing has shown O-rings to provide satisfactory service life, both cyclic and shelf life may vary widely with differing service conditions, properties of reactants, pressure and temperature cycling and age of the O-ring, FREQUENT INSPECTIONS SHOULD BE MADE to detect any deterioration, and O-rings replaced as required.

*Maximum pressure rating is based on the lowest rating of any component. Actual working pressure may be determined by tubing pressure rating,if lower.

All dimensions for reference only and subject to change.
For prompt service, Parker Autoclave Engineers stocks select products. Consult your local representative.

Parker MPI™ Medium Pressure Products

Actuator Selection - Fail Close Type MAN Series Valves

Valve Series	Duty Rating		System Pressure KSI (bar)							Max. Press. psi (bar)	Flow Coefficient Cv**
			1-4 (70-275)	6 (410)	8 (550)	10 (690)	12 (830)	14 (970)	15 (1035)		
4MP7	Medium Duty 01S	Air Pressure psi (bar)	65 (4.48)	65 (4.48)	65 (4.48)	75 (5.17)	85 (5.86)	95 (6.55)	95 (6.55)	15,000 (1035)	0.31 to 0.22***
		Spring Pre-Compression in (mm)	0.19 (4.83)	0.19 (4.83)	0.19 (4.83)	0.25 (6.35)	0.31 (7.87)	0.38 (9.65)	0.44 (11.18)		
		Stem Travel in (mm)	0.25 (6.35)	0.25 (6.35)	0.25 (6.35)	0.25 (6.35)	0.25 (6.35)	0.25 (6.35)	0.19 (4.83)		
	Heavy Duty 02S	Air Pressure psi (bar)	35 (2.41)	35 (2.41)	35 (2.41)	40 (2.76)	45 (3.10)	50 (3.45)	50 (3.45)		
6MP7	Medium Duty 01S	Air Pressure psi (bar)	65 (4.48)	65 (4.48)	75 (5.17)	85 (5.86)	95 (6.55)	95 (6.55)	95 (6.55)	15,000 (1035)	0.75 to 0.57***
		Spring Pre-Compression in (mm)	0.19 (4.83)	0.19 (4.83)	0.25 (6.35)	0.31 (7.87)	0.38 (9.65)	0.44 (11.18)	0.50 (12.70)		
		Stem Travel in (mm)	0.25 (6.35)	0.25 (6.35)	0.25 (6.35)	0.25 (6.35)	0.25 (6.35)	0.19 (4.83)	0.12 (3.05)		
	Heavy Duty 02S	Air Pressure psi (bar)	35 (2.41)	35 (2.41)	40 (2.76)	45 (3.10)	50 (3.45)	50 (3.45)	50 (3.45)		
8MP7	Medium Duty 01S	Air Pressure psi (bar)	85 (5.86)	90 (6.21)	95 (6.55)	95 (6.55)	-	-	-	9,800 (675)	1.29 to 0.53***
		Spring Pre-Compression in (mm)	0.31 (7.87)	0.34 (8.64)	0.47 (11.94)	0.56 (14.22)	-	-	-		
		Stem Travel in (mm)	0.25 (6.35)	0.25 (6.35)	0.15 (3.81)	0.06 (1.52)	-	-	-		
	Heavy Duty 02S	Air Pressure psi (bar)	50 (3.45)	55 (3.79)	65 (4.48)	70 (4.83)	75 (5.17)	75 (5.17)	75 (5.17)	15,000 (1035)	1.29 to 0.53***
		Spring Pre-Compression in (mm)	0.19 (4.83)	0.22 (5.59)	0.28 (7.11)	0.34 (8.64)	0.44 (11.18)	0.50 (12.70)	0.56 (14.22)		
		Stem Travel in (mm)	0.25 (6.35)	0.25 (6.35)	0.25 (6.35)	0.25 (6.35)	0.19 (4.83)	0.12 (3.05)	0.06 (1.52)		
	Extra Heavy Duty Single Stage H01S	Air Pressure psi (bar)	40 (2.76)	40 (2.76)	50 (3.45)	55 (3.79)	60 (4.13)	65 (4.48)	70 (4.83)	15,000 (1035)	1.30
		Spring Pre-Compression in (mm)	0.25 (6.35)	0.28 (7.11)	0.38 (9.65)	0.47 (11.94)	0.56 (14.22)	0.66 (16.76)	0.75 (19.05)		
		Stem Travel in (mm)	0.38 (9.65)	0.38 (9.65)	0.38 (9.65)	0.38 (9.65)	0.38 (9.65)	0.38 (9.65)	0.38 (9.65)		
	Extra Heavy Duty Two Stage H02S	Air Pressure psi (bar)	30 (2.07)	35 (2.41)	35 (2.41)	40 (2.76)	40 (2.76)	45 (3.10)	50 (3.45)	15,000 (1035)	1.30
		Spring Pre-Compression in (mm)	0.13 (3.30)	0.16 (4.06)	0.19 (4.83)	0.25 (6.35)	0.28 (7.11)	0.34 (8.64)	0.38 (9.65)		
		Stem Travel in (mm)	0.38 (9.65)	0.38 (9.65)	0.38 (9.65)	0.38 (9.65)	0.38 (9.65)	0.38 (9.65)	0.38 (9.65)		

To select Needle Valve Actuator:

Example:

Need to know: Valve Model/Connection Size - **8MP7 Needle Valve**
Indoor or Outdoor Service - **Indoor Service**
Maximum Operating Pressure: Fluid - **12,000 psi**
Maximum Available Air Pressure - **60 psi**
Select Actuator Type (Fail Open or Fail Close) – **Fail Closed Type**

Example: Using chart on page 44 (Fail Close Actuators), select **8MP7 Section**

Across top of chart, select **12 System Pressure** (12,000 psi max system pressure)
Go down that column to **8MP7 Section** to first row filled with number (air pressure)
First row with number is 75 – as your available air pressure is 60 psi, you have to go further. Next actuator (extra Heavy Duty Single Stage) H01S needs 60 psi to close at this pressure.

This row (**Extra Heavy Duty Single Stage H01S Actuator**) confirms that this actuator needs 60 psi to close the 8MP7 valve at 12,000 psi and you have 60 psi available. Go to Ordering Suffix Charts on page 42 – find "**Extra Heavy Single Stage**" Duty Rating – "**Fail Closed**"
Select Suffix code = **-H01SOD (OD = Outdoor)** and add to Needle Valve Model Number.

Example: 8MP7-MANABR-T-SS-H01S

** C_V data is for 2-way straight valves.
For angle pattern, add approximately 50% to the C_V valve.

CAUTION: While testing has shown O-rings to provide satisfactory service life, both cyclic and shelf life may vary widely with differing service conditions, properties of reactants, pressure and temperature cycling and age of the O-ring, FREQUENT INSPECTIONS SHOULD BE MADE to detect any deterioration, and O-rings replaced as required.

*Maximum pressure rating is based on the lowest rating of any component. Actual working pressure may be determined by tubing pressure rating,if lower.

All dimensions for reference only and subject to change.
For prompt service, Parker Autoclave Engineers stocks select products. Consult your local representative.

Actuator Selection - Fail Close Type MAN Series Valves

Valve Series	Operator Duty		System Pressure KSI (bar)								
			1-4 (70-275)	6 (410)	8 (550)	10 (690)	12 (830)	14 (970)	15 (1035)	Max. Press. psi (bar)	Flow Coefficient Cv**
9MP7	Medium Duty 01S	Air Pressure psi (bar)	95 (6.55)	95 (6.55)	95 (6.55)	-	-	-	-	7,900 (545)	1.74 to 0.72***
		Spring Pre-Compression in (mm)	0.38 (9.65)	0.44 (11.18)	0.56 (14.22)	-	-	-	-		
		Stem Travel in (mm)	0.25 (6.35)	0.19 (4.83)	0.06 (1.52)	-	-	-	-		
	Heavy Duty 02S	Air Pressure psi (bar)	55 (3.79)	65 (4.48)	70 (4.83)	75 (5.17)	75 (5.17)	75 (5.17)	-	14,000 (965)	1.74 to 0.72***
		Spring Pre-Compression in (mm)	0.22 (5.59)	0.28 (7.11)	0.34 (8.64)	0.44 (11.18)	0.50 (12.70)	0.59 (14.99)	-		
		Stem Travel in (mm)	0.25 (6.35)	0.25 (6.35)	0.25 (6.35)	0.19 (4.83)	0.13 (3.30)	0.06 (1.52)	-		
	Extra Heavy Duty Single Stage H01S	Air Pressure psi (bar)	45 (3.10)	45 (3.10)	55 (3.79)	60 (4.13)	65 (4.48)	70 (4.83)	75 (5.17)	15,000 (1035)	1.75
		Spring Pre-Compression in (mm)	0.31 (7.87)	0.34 (8.64)	0.47 (11.94)	0.59 (14.99)	0.88 (22.35)	1.00 (25.40)	1.13 (28.70)		
		Stem Travel in (mm)	0.38 (9.65)	0.38 (9.65)	0.38 (9.65)	0.38 (9.65)	0.38 (9.65)	0.38 (9.65)	0.38 (9.65)		
	Extra Heavy Duty Two Stage H02S	Air Pressure psi (bar)	25 (1.72)	30 (2.07)	35 (2.41)	40 (2.76)	45 (3.10)	50 (3.45)	55 (3.79)	15,000 (1035)	1.75
		Spring Pre-Compression in (mm)	0.16 (4.06)	0.19 (4.83)	0.25 (6.35)	0.28 (7.11)	0.44 (11.18)	0.56 (14.22)	0.62 (15.74)		
		Stem Travel in (mm)	0.38 (9.65)	0.38 (9.65)	0.38 (9.65)	0.38 (9.65)	0.38 (9.65)	0.38 (9.65)	0.38 (9.65)		
12MP7	Extra Heavy Duty Single Stage H01S	Air Pressure psi (bar)	55 (3.79)	65 (4.48)	80 (5.52)	95 (6.55)	100 (6.89)	-	-	12,000 (827)	2.80
		Spring Pre-Compression in (mm)	0.44 (11.18)	0.63 (16.00)	0.84 (21.34)	1.06 (26.92)	1.44 (36.57)	-	-		
		Stem Travel in (mm)	0.44 (11.18)	0.44 (11.18)	0.44 (11.18)	0.44 (11.18)	0.62 (15.74)	-	-		
	Extra Heavy Duty Two Stage H02S	Air Pressure psi (bar)	40 (2.76)	50 (3.45)	55 (3.79)	60 (4.13)	65 (4.48)	70 (4.83)	70 (4.83)	15,000 (1035)	2.80
		Spring Pre-Compression in (mm)	0.22 (5.59)	0.31 (7.87)	0.44 (11.18)	0.53 (13.46)	0.81 (20.57)	0.84 (21.34)	0.94 (23.87)		
		Stem Travel in (mm)	0.44 (11.18)	0.44 (11.18)	0.44 (11.18)	0.44 (11.18)	0.44 (11.18)	0.44 (11.18)	0.44 (11.18)		
16MP7	Extra Heavy Duty Single Stage H01S	Air Pressure psi (bar)	75 (5.17)	100 (6.89)	-	-	-	-	-	6,500 (448)	5.20
		Spring Pre-Compression in (mm)	0.69 (17.53)	1.13 (28.70)	-	-	-	-	-		
		Stem Travel in (mm)	0.50 (12.70)	0.50 (12.70)	-	-	-	-	-		
	Extra Heavy Duty Two Stage H02S	Air Pressure psi (bar)	55 (3.79)	65 (4.48)	75 (5.17)	85 (5.86)	90 (6.20)	90 (6.20)	90 (6.20)	15,000 (1035)	5.20
		Spring Pre-Compression in (mm)	0.34 (8.64)	0.53 (13.46)	0.69 (17.53)	0.88 (22.35)	1.14 (28.95)	1.38 (35.05)	1.44 (36.57)		
		Stem Travel in (mm)	0.50 (12.70)	0.50 (12.70)	0.50 (12.70)	0.50 (12.70)	0.38 (9.65)	0.12 (3.04)	0.06 (1.52)		

* Maximum pressure rating is based on the lowest rating of any component. Actual working pressure may be determined by tubing pressure rating, if lower.

** C_V data is for 2-way straight valves. For angle pattern, add approximately 50% to the C_V valve.

*** C_V varies because of spring compression limitations. The flow coefficient range is given for the maximum stem travel (lowest system pressure) to minimum travel (highest system pressure).

CAUTION: While testing has shown O-rings to provide satisfactory service life, both cyclic and shelf life may vary widely with differing service conditions, properties of reactants, pressure and temperature cycling and age of the O-ring, FREQUENT INSPECTIONS SHOULD BE MADE to detect any deterioration, and O-rings replaced as required.

All dimensions for reference only and subject to change.
For prompt service, Parker Autoclave Engineers stocks select products. Consult your local representative.

Tel: +45 63 12 83 00 | Email: ps@hymatik.com | www.hymatik.com | Hvidkaervej 27a, DK-5250 Odense SV, Denmark

MPI™ Medium Pressure Products

MAN Series Actuators - Electric Flow Regulating (FRC)

There is an increasing need for remote control of many valves, including Needle multi-turn style valves. Until recently, this required a combination of both pneumatic and electric systems working in tandem, which is cumbersome and expensive to operate.

Parker Autoclave Engineers has developed an All-Electric Regulating/Full Closure actuator for use with the MPI™ (Medium Pressure Inverted (Gland)) connection style needle valves.

Available in Weather-Proof or Explosion-Proof versions, these actuators allow for remote control and feedback to digital control systems with just a 4-20mA signal.

Features and Benefits

- 24 VDC, 72 Watt Max Operation (5 wire)
- 4-20mA Remotely Powered Input Signal
- Internally Powered 4-20mA Output of Exact Position
- Oiled-For-Life Bearings (Bronze) and Gears (Sintered)
- Weather-Proof Aluminum Housing
- Explosion-Proof Cas Aluminum Anodized Nema 8/IP67 CSA Approved, Class 1 Div 1 Groups B, C, D
- Life Expectancy - 250,000 Cycles MTF



Electric Actuated Shut-Off/Flow Regulating

Generalized Flow Coefficient Curves (C_V)

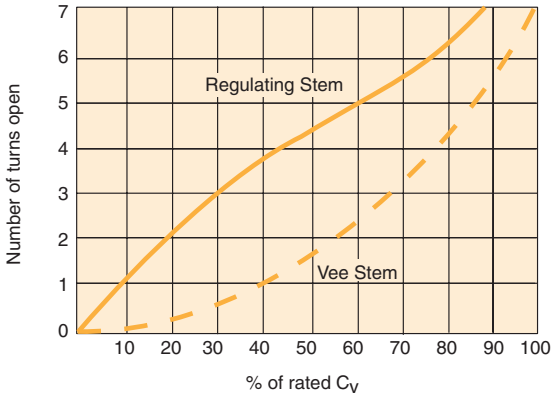



Explosion Proof Electric Actuated Shut-Off/Flow Regulating

MPI™ Medium Pressure Products

Parker

Dimensions:

Weather-Proof Version	Explosion-Proof Version
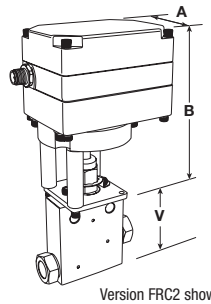 Version FRC2 shown	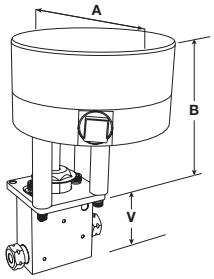 Version FRC1X shown

Version	A	B	V
Weather-Proof **FRC1**	3.0" (76.2 mm)	3.67" (93.2 mm)	See Valve Dimension of Body Style on Pages 38-40
Weather-Proof **FRC2** High Torque	3.0" (76.2 mm)	5.57" (141.4 mm)	
Explosion-Proof **FRC1X**	4.25" (107.9 mm)	4.35" (110.4 mm)	
Explosion-Proof **FRC2X** High Torque	4.25" (107.9 mm)	5.86" (148.8 mm)	

Electrical Specifications:

- Electrical Input: 24VDC only, 72 Watt maximum
- Control Input: 4-20mA
- Position Feedback: Independent 4-20mA
- Position Detection: Hall Sensors
- Motor: BLDC brushless DC motor

Position on Powerloss:

- Remembers Last Position
- Reseats Valve if Signal is Between 3.0 and 4.16mA

Mechanical Specifications:

- Standard Enclosure - EPD Coated NEMA 4/IP65 Equivalent
- Optional Anodized Aluminum Explosion-Proof Enclosure, Nema 8/IP67, CSA Approved for Class 1, Groups B, C, D /T6 Areas
- 500+ Positions per turn (+/- 0.25° Position Accuracy), 3243 Actuator Positions over Full Span
- Speed Range: 3 to 15 seconds/turn
- Operational Temperature -40°(-40°C) to 160°F(70°C), Valve Temperature not to exceed 600°F
- Actuator Life Expectancy: 250,000 cycles
- Gears and Bearings are Lifetime Lubricated
- 20 ft. cable included with 6 pin/5 wire connector (FRC1 and FRC2 only)

Ordering Guide:

Example Part Number:		**9MP7**	—	**MAN**		**ARR**	—	**T**	—	**SS**	—	**LBT**		**FRC1**
Ordering Parameters/Options:		Valve Size Connection Type		Valve Series		Valve Body/ Stem Type		Valve Packing (-100 to 600°F Options)		Valve Material		Valve Options		Electric Flow Regulating Actuator
Table Reference: (see below)		A		B		C		D		E		F		G

Example: **9MP7-MANARR-T-SS-LBT-FRC1** = 9/16" MPI, MAN Series Needle Valve, 2 Way Angle/Regulating Stem/Replaceable Seat, 316 Stainless Steel, Cryogenic, Indoor Weather-Proof Electric Actuator

A - Valve Size / Connection Type	
4MP7	1/4" MPI
6MP7	3/8" MPI
8MP7	1/2" MPI
9MP7	9/16" MPI

B - Valve Series	
MAN	MAN Series Needle Valves

C - Valve Body / Stem Type	
LR	2 Way Straight/Regulating Stem
AR	2 Way Angle/Regulating Stem
ARR	2 Way Angle/Regulating Stem/Replaceable Seat
XRD[1]	3 Way/Regulating/1 Inlet - 2 Stem Outlet

D - Valve Packing (-100 to 600°F Options)	
T	PTFE Packing: -100°F (-73°C) to 450°F (232°C)
TG[2]	PTFE/Glass (25%) Packing to 600°F (316°C)

E - Valve Material	
SS	316 Stainless Steel (Cold Worked)
2507	Super Duplex (Annealed)

F - Valve Options	
LBT	Cryogenic Applications to -100°F (-73°C)
HYG	Hydrogen/Helium Applications
XF	Extra Strength Ferrule Set for sizes 12 & 16 (2507 Super Duplex Tubing Only)

G - Electric Flow Regulating Actuator	
FRC1	Indoor/Weather-Proof
FRC2	Indoor/Weather-Proof (for 8MP7 or 9MP7 Only)
FRC1X	Explosion-Proof - Class 1, Div. 1, Groups B, C, and D
FRC2X	Explosion-Proof - Class 1, Div. 1, Groups B, C, and D (for 8MP7 or 9MP7 Only)
FRC1Xc	Explosion-Proof with Div 2 Explosion Proof Cable Option
FRC2Xc	Explosion-Proof with Div 2 Explosion Proof Cable Option (for 8MP7 or 9MP7 Only)

1- XRD option would require two actuators unless otherwise specified
2- Good ventilation is required when using Valve/Actuator at extended temperatures. Actuator internal temperature cannot exceed -40° to 160°F.

Tel: +45 63 12 83 00 | Email: ps@hymatik.com | www.hymatik.com | Hvidkaervej 27a, DK-5250 Odense SV, Denmark

Parker MPI™ Medium Pressure Products

MADBN Series Double Block and Bleed Needle Valves

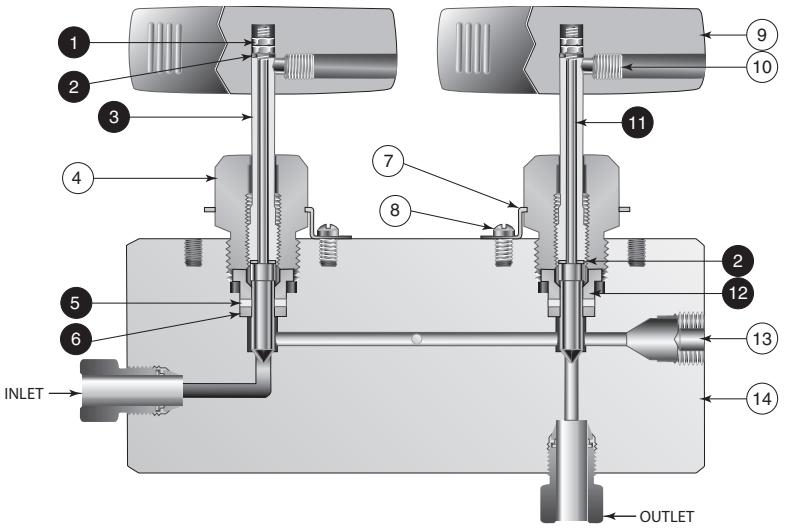

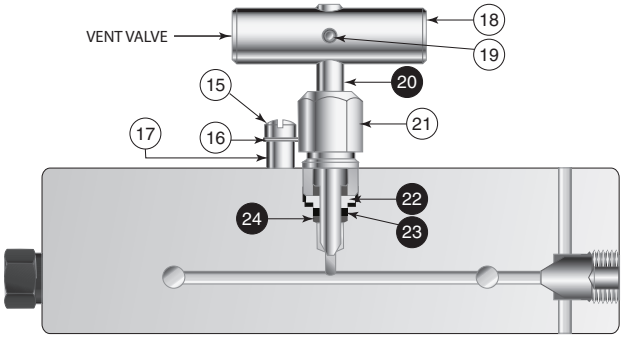

BOTTOM VIEW

Material of Construction

Item#	Description	Material
❶	Hex Nut	Stainless
❷	Thrust Washer	17-4PH
❸	Stem Sleeve	304 SS
4	Packing Gland	Ampco 45
❺	Packing	PTFE
❻	Bottom Washer	316 SS
7	Locking Device	302 SS
8	Pan Hd Screw 10-24 x 1/4"	18-8 SS
9	Handle	316 SS
10	Set Screw	Stainless
⓫	Stem	316 SS
⓬	Packing Washer	Ampco 45

Item#	Description	Material
13	Flush Plug	316 SS
14	Body	316 SS
15	Pan Head Screw M3.5x.6x10mm	Stainless
16	Locking Device	316 SS
17	Spacer	316 SS
18	Handle	316 SS
19	Spring Pin	18-8 SS
⓴	Stem	316 SS
21	Packing Gland	316 SS
㉒	Packing Washer	Ampco 45
㉓	Packing	PTFE
㉔	Bottom Washer	316 SS

❶ Typical spare parts found in Repair Kit

Tel: +45 63 12 83 00 | Email: ps@hymatik.com | www.hymatik.com | Hvidkaervej 27a, DK-5250 Odense SV, Denmark

MADBN Series Double Block and Bleed Needle Valves

Parker Part No.	Pressure psi (bar)	Connection	Orifice inch (mm)	Dimensions - inches (mm)														
				A	B	C	D	D1	E	F	G	H	M	N	O	P	Q	V
4MP7-MADBNLB-T-SS	15,000 (1034)	1/4" MPI	0.093 (2.36)	5.75 (146.05)	1.25 (31.75)	0.50 (12.70)	1.50 (38.10)	1.13 (28.70)	2.38 (60.45)	3.00 (76.20)	1.00 (25.40)	4.89 (124.21)	0.69 (17.53)	2.88 (73.15)	0.63 (16.00)	1.50 (38.10)	1.47 (37.34)	0.50 (12.70)
6MP7-MADBNLB-T-SS	15,000 (1034)	3/8" MPI	0.093 (2.36)	6.00 (152.40)	1.38 (35.05)	0.63 (16.00)	1.50 (38.10)	1.13 (28.70)	2.38 (60.45)	3.00 (76.20)	1.00 (25.40)	4.89 (124.21)	0.69 (17.53)	3.00 (76.20)	0.63 (16.00)	1.50 (38.10)	1.47 (37.34)	0.50 (12.70)
8MP7-MADBNLB-T-SS	15,000 (1034)	1/2" MPI	0.093 (2.36)	7.50 (190.50)	1.50 (38.10)	0.69 (17.53)	2.38 (60.45)	1.75 (44.45)	3.58 (90.93)	4.00 (101.60)	1.00 (25.40)	6.63 (168.40)	0.69 (17.53)	3.75 (95.25)	0.63 (16.00)	1.50 (38.10)	1.47 (37.34)	0.50 (12.70)
9MP7-MADBNLB-T-SS	15,000 (1034)	9/16" MPI	0.093 (2.36)	7.50 (190.50)	1.50 (38.10)	0.75 (19.05)	2.38 (60.45)	1.75 (44.45)	3.58 (90.93)	4.00 (101.60)	1.00 (25.40)	6.63 (168.40)	0.69 (17.53)	3.75 (95.25)	0.63 (16.00)	1.50 (38.10)	1.47 (37.34)	0.50 (12.70)

For 2507 Super Duplex option, replace **-SS** with **-2507**

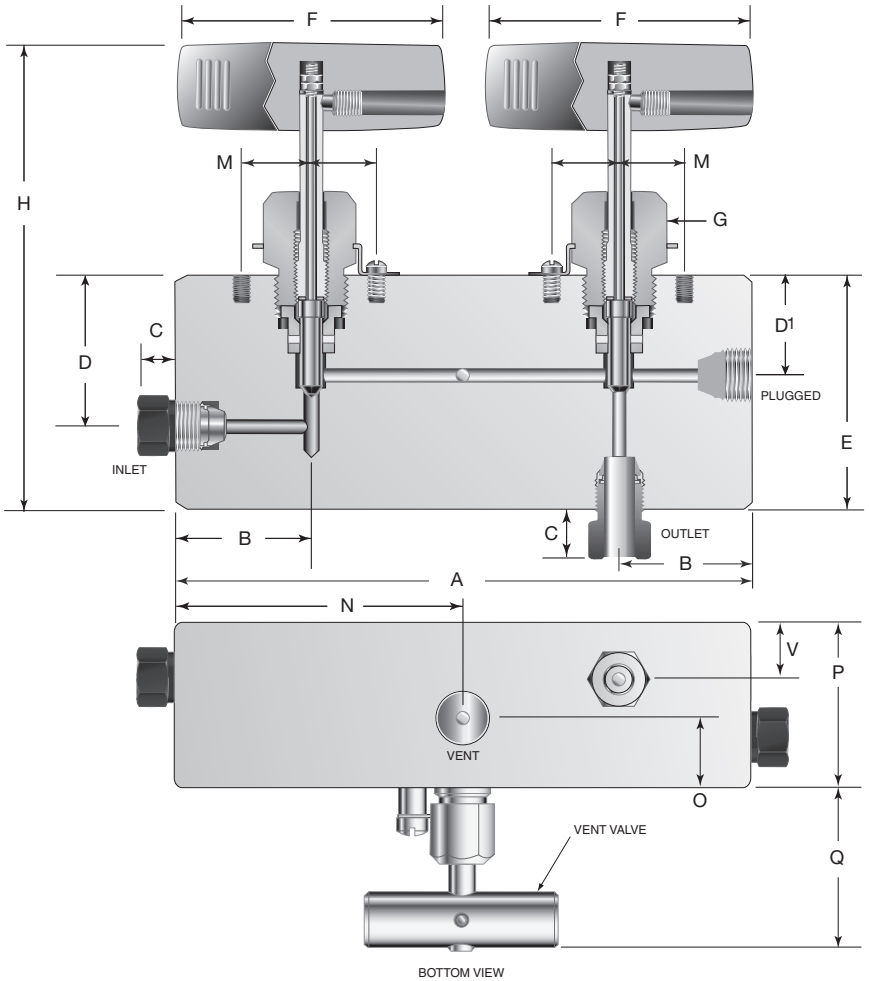

Notes:

G = Packing gland mounting hole drill size

H = Dimension with stem in closed position

All vent connections are 1/4" NPT

Tel: +45 63 12 83 00 | Email: ps@hymatik.com | www.hymatik.com | Hvidkaervej 27a, DK-5250 Odense SV, Denmark

MAGV Series Single Block and Bleed Gauge Valve

(Replaces MPGV Series Ball Valves)

Gauge valve and Bleed valve are designed to be used together. Bleed valve can be placed in any of the three possible outlet locations as desired.

Parker Part No.	Pressure psi (bar)	Connection	Orifice inch (mm)	Dimensions - inches (mm)									
				A	B	C	D	E	F	G	H	J	"K" Dia
6MP7-MAGV-T-SS	15,000 (1034)	3/8" MPI	0.125 (3.18)	3.63 (92.20)	2.50 (63.50)	1.25 (31.75)	1.39 (35.31)	1.25 (31.75)	0.50 (12.70)	0.94 (23.88)	0.25 (6.35)	0.25 (6.35)	0.28 (7.11)
8MP7-MAGV-T-SS	15,000 (1034)	1/2" MPI	0.125 (3.18)	4.70 (119.38)	3.00 (76.20)	1.50 (38.10)	1.88 (47.75)	1.75 (44.45)	0.65 (16.51)	0.94 (23.88)	0.38 (9.65)	0.38 (9.65)	0.28 (7.11)
9MP7-MAGV-T-SS	15,000 (1034)	9/16" MPI	0.125 (3.18)	4.70 (119.38)	3.00 (76.20)	1.50 (38.10)	1.88 (47.75)	1.75 (44.45)	0.65 (16.51)	0.94 (23.88)	0.38 (9.65)	0.38 (9.65)	0.28 (7.11)

For 2507 Super Duplex option, replace **-SS** with **-2507**

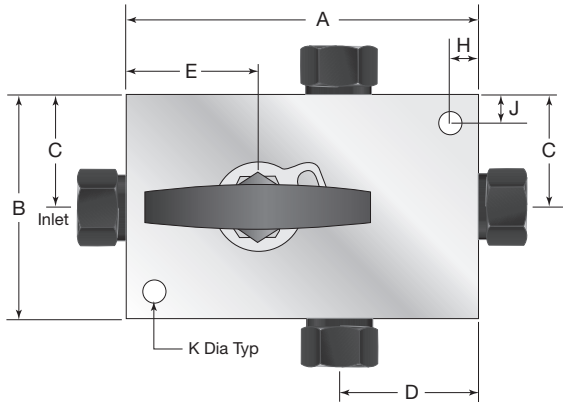

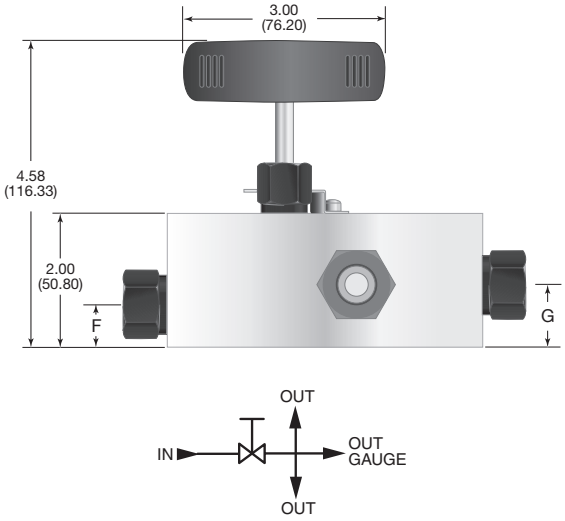

Material of Construction

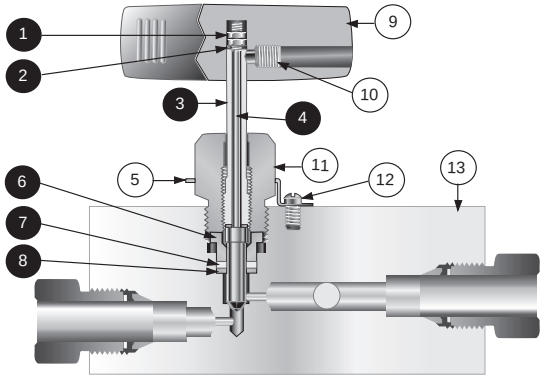

Item#	Description	Material
❶	Hex Nut	300 Series SS
❷	Thrust Washer	17-4PH
❸	Stem Sleeve	304 SS
❹	Stem	316 SS
5	Locking Device	302 SS
❻	Packing Washer	Ampco 45
❼	Packing	PTFE
❽	Bottom Washer	316 SS
9	Handle	316 SS
10	Pan Hd Screw 10-24 x 1/4"	300 Series SS
11	Packing Gland	Ampco 45
12	Screw	18-8 SS
13	Valve Body	316 SS

❶ Typical spare parts found in Repair Kit

Tel: +45 63 12 83 00 | Email: ps@hymatik.com | www.hymatik.com | Hvidkaervej 27a, DK-5250 Odense SV, Denmark

MABV Series Bleed Valves

(Replaces MPBV Series Ball Valves)

				Dimensions - inches (mm)		
Parker Part No.	Pressure psi (bar)	Connection	Orifice inch (mm)	A	B	C
6T7-MABV-V-SS	15,000 (1034)	3/8" Tube Stub	0.094 (2.39)	4.05 (102.87)	3.22 (81.79)	1.61 (40.89)
8T7-MABV-V-SS	15,000 (1034)	1/2" Tube Stub	0.094 (2.39)	4.50 (114.30)	3.68 (93.47)	1.88 (47.75)
9T7-MABV-V-SS	15,000 (1034)	9/16" Tube Stub	0.094 (2.39)	4.56 (115.82)	3.74 (95.00)	1.94 (49.28)

For 2507 Super Duplex option, replace **-SS** with **-2507**

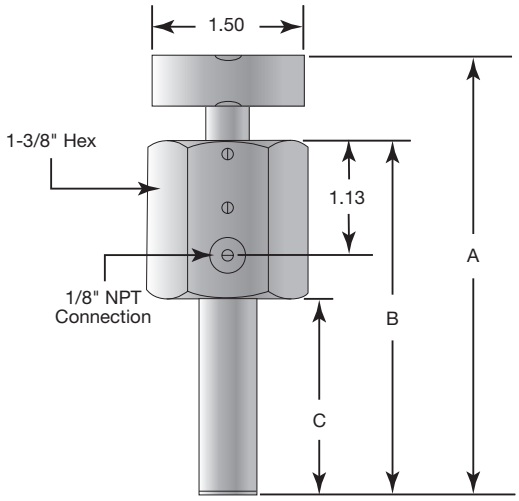



MAGV Series Gauge Valve with MABV Vent valve shown in one of three possible outlet locations.

Material of Construction

Item#	Qty	Description	Material
1	1	Handle	Aluminum
2	2	Spring Pin	18-8 SS
3	1	O-ring	Fluorocarbon Rubber
4	1	Body	316 SS
5	1	Hex Socket Set Screw	300 Series SS
6	1	Stem	316 SS

Note: No repair kit available, replace valve.

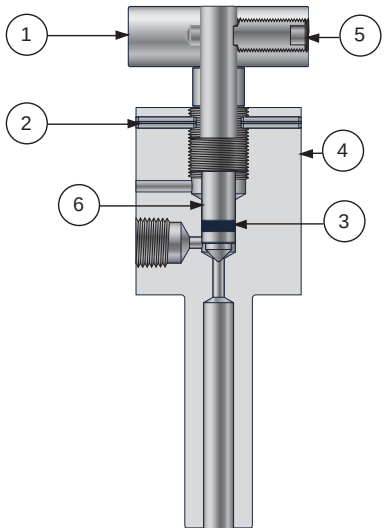

Tel: +45 63 12 83 00 | Email: ps@hymatik.com | www.hymatik.com | Hvidkaervej 27a, DK-5250 Odense SV, Denmark

MPI™ Medium Pressure Products

MAB Series Ball Valves with MPI™ Style Connections

Pressures to 15,000 psi (1034 bar)

Parker MAB series 2-way and 3-way ball valves are in a class by themselves… Our single trunnion style Ball/Stem does not allow the separation that is common to slotted ball type designs. Our PEEK™ ball seats are re-torqueable if necessary unlike other shoulder stop designs. Valve options include thru-bore sizes that are unmatched in flow capability.

When sizing ball valves, options permit selection of both the bore size AND the connection size to maximize your process conditions and reduce pressure drop. The MPI™ Double Ferrule connection delivers fast, easy make-up and reliable bubble-tight performance in either liquid or gas service.

MPI™ tube connection sizes from 1/4" to 1" can be mated to up to 3 different bore size valves. Ball Valves can be either electrically or pneumatically actuated. See pages 61-69 for a complete selection for any valve style/size

Features and Benefits

- One-piece trunnion style ball/stem design eliminates shear failure and reduces side loading found in two-piece designs
- Re-Torqueable PEEK™ Seat Glands for longer life
- CW 316 Stainless Steel Material is Standard, 2507 Annealed Super Duplex as option
- Full Port flow path minimizes pressure drop
- Low friction, pressure assisted graphite filled PTFE stem seal increases cycle life and reduces operating torque
- Temperature range from 0°F (-18°C) to 400°F (204°C) standard, to 500°F (260°F) as option
- Viton™ Fluoroelastomer/FKM o-rings are standard, see ordering chart for options
- 2-way Bi-Directional and and 3-Way (Switching or Diverter Styles) available



Pneumatic and Electric Actuators

Pneumatic ball valve actuators are found on pages 62-63 and are available for every bore/size option we offer (90° or 180° as needed). Our standard housing is corrosion resistant anodized aluminum and other materials are available. Position identification and NAMUR VDI/VDE 3845 and ISO 5211 mounting configuration for NAMUR solenoid valves, limit switches, or positioners is standard.

Electric actuators (pages 64-69) are available in Weatherproof or Explosionproof styles depending on location. Both varieties come standard with two (open/closed) position switches (SPDT) and additional switches can be added. Explosionproof version includes an external handwheel for manual operation. Most valves have 24VDC, 120VAC, or 220VAC options.

How to Order 2-way and 3-way MAB Series Ball Valves

When ordering Parker MPI™ Ball valves, consider first the bore size to verify that it is large enough for the flow rate needed, then choose the end connection. We have flow and pressure options not found anywhere else. The correct part number is easily derived from the following example and ordering chart. The ten product characteristics required are coded as shown in the chart.

The following example describes an MAB Series, three-way diverter ball valve with a .375" orifice, fluorocarbon rubber seals, 1/4" MPI™ medium pressure inverted connections on all ports, stainless steel body and the optional lock out device.

Typical part number example: **4MP7-MAB6XPKD-V-SSP-LD** (part number is created based on customer selection of product parameters, see below for example)

4	MP7	-	MAB	6	X	PK	D	-	V	-	SSP	-	LD
Inlet/Outlet Connection Size	Connection Type		Valve Series	Orifice Size	Valve Type	Seat Material	3 Way Valve Type		Seat Gland Seal Material		Body Material		Options
4 = 1/4" **6** = 3/8" **8** = 1/2" **9** = 9/16" **12** = 3/4" **16** = 1"	**MP7=** Parker MPI™		**MAB**	**3** = 3/16"[2] **4** = 1/4"[1] **6** = 3/8" **8** = 1/2" **12** = 3/4"[1]	**L=** 2 Way **X=** 3 Way	**PK=** PEEK	**Blank=** Selector **D=** Diverter		**V***=** Fluorocarbon Rubber **KZ**=** FFKM Highly Fluorinated Fluorocarbon Rubber **BN=** Nitrile Rubber **EPR=** Ethylene Propylene Rubber **C**=** PTFE U-Cup		**SSP=** Stainless Steel **2507=** Super Duplex		**LD=** Lock Out Device **XF=** High Strength Ferrules for 2507 SD sizes 12 & 16 only **Actuator Options** (see pages 61-69)
									** Limited size availability - see O-ring options below *** Standard o-ring material				

[1] Only Available with 2-Way Valves

[2] Only Available with 3-Way Valves

Note: Critical gas applications such as hydrogen or helium are not recommended. Consult factory with application details for assistance.

Options

Standard valve has Fluorocarbon Rubber o-rings [0 ºF (-18 ºC) to 400 ºF (204 ºC) maximum].

KZ - Standard valve with FFKM Highly Fluorinated Fluorocarbon Rubber o-rings [30°F to 500°F (0° to 260°C).
NOTE: Not available with 3/4" orifice 2-way valves

C - Standard valve with PTFE U-Cup Seal [0° to 500°F (-18° to 260°C)].
NOTE: Only available with 3/4" orifice 2-way valves

BN - Standard valve with Buna-N (Nitrile) Rubber o-rings [-20° to 250°F (-29° to 121°C)].

EPR - Standard valve with Ethylene Propylene Rubber o-rings [-20° to 250°F (-29° to 121°C).

LD - Standard valve with factory-installed lock out device.

Tel: +45 63 12 83 00 | Email: ps@hymatik.com | www.hymatik.com | Hvidkaervej 27a, DK-5250 Odense SV, Denmark

Parker MPI™ Medium Pressure Products

MAB Series Valves

(Replaces MPB Series Ball Valves)

Parker MAB series manual, pneumatic and electrically actuated two-way and three-way ball valves are designed for quarter and half-turn media shutoff or switching applications up to 15,000 psi. Our single-piece trunnion style ball design and re-torqueable seats make the MAB series ideal for severe service applications. The end connector design enables a variety of end connections and combinations for specific customer applications. Please see Parker Autoclave Engineers Ball Valve Literature for additional connection options.

2 Way Ball Valves

Orifice Size	Part Number	MAWP PSI	Connection	Inches			Repair Kits
				Minimum Valve Orifice	Cv	Overall Length	
1/4"	4MP7-MAB4LPK-V-SSP	15,000	1/4" MPI	0.125	0.25	4.19	R2B4S
	6MP7-MAB4LPK-V-SSP	15,000	3/8" MPI	0.250	1.51	4.19	
	8MP7-MAB4LPK-V-SSP	15,000	1/2" MPI	0.250	1.51	5.34	
	9MP7-MAB4LPK-V-SSP	15,000	9/16" MPI	0.250	1.51	5.34	
3/8"	8MP7-MAB6LPK-V-SSP	15,000	1/2" MPI	0.312	3.24	6.27	R2B6S
	9MP7-MAB6LPK-V-SSP	15,000	9/16" MPI	0.375	5.20	6.27	
1/2"	12MP7-MAB8LPK-V-SSP	15,000	3/4" MPI	0.500	10.20	10.85	R2B8S
	16MP7-MAB8LPK-V-SSP	12,500	1" MPI	0.500	10.20	10.85	
3/4"	12MP7-MAB12LPK-V-SSP	15,000	3/4" MPI	0.531	11.80	9.18	R2B12S
	16MP7-MAB12LPK-V-SSP	12,500	1" MPI	0.688	21.00	9.18	

For 2507 Super Duplex option, replace **-SS** with **-2507** and use **-XF** ferrule sets for sizes 12 and 16 and increase MAWP to 15,000 psi. Standard Repair Kits include Viton (Fluorocarbon rubber) orings - use MAB option codes for different material requirements. Dimensions in inches are for reference only, subject to change.
Note: Ball Valves are not recommended for critical gas applications such as Hydrogen, Helium, or other small molecular gases. Consult Factory for assistance.

Material of Construction

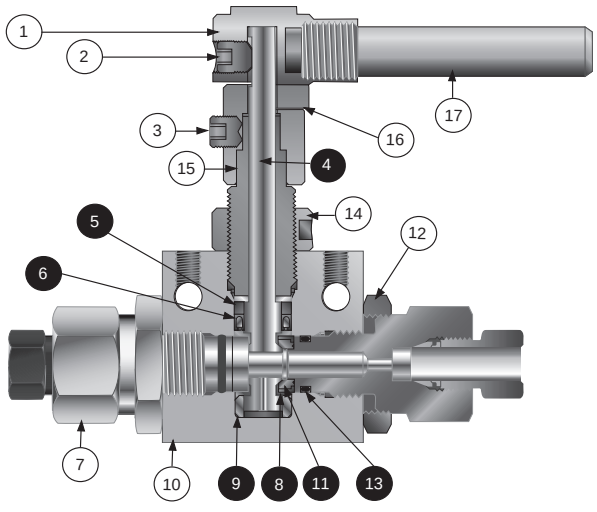

Item#	Description	Material
1	Handle Hub	316 SS
2	Set Screw	Stainless
3	Set Screw	Stainless
❹	One Piece Ball and Stem	316 SS
❺	Thrust Washer	Ampco 45
❻	Spring Energized Seal	Graphite/Carbon PTFE
7	Seat Gland	316 CW SS
❽	Seat Retainer	316 CW SS
❾	Bottom Bearing	PEEK
10	Body	316 SS
⓫	Seat	PEEK
12	Locknut	316 SS
⓭	O-ring	Viton
14	Locking Piece	316 SS
15	Packing Gland	316 CW SS
16	Stopping Device	316 SS
17	Handle	304 SS

❶ Typical spare parts found in Repair Kit

Dimensions

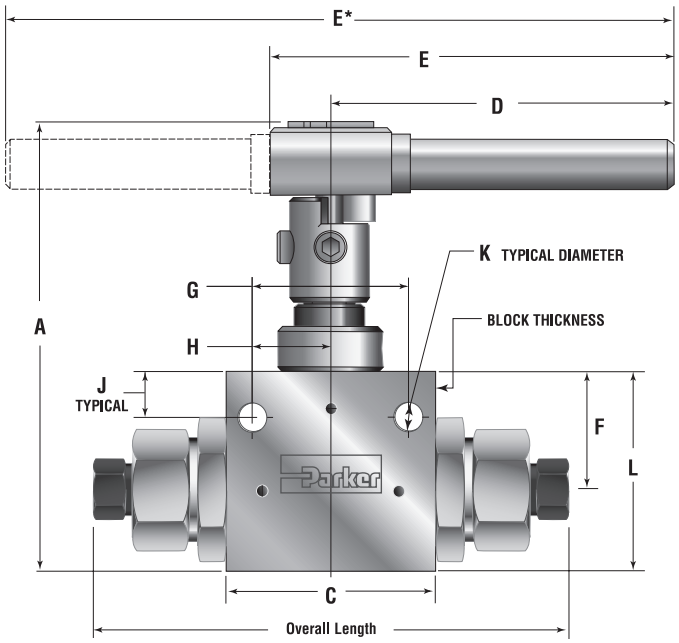

	Inches (mm)										
Orifice Size	A	C	D	E	F	G	H	J	K	L	Block Th'k
1/4"	4.33 (109.99)	2.00 (50.80)	3.37 (85.55)	3.83 (97.28)	1.13 (28.58)	1.50 (38.10)	0.75 (19.05)	0.44 (11.18)	0.28 (7.11)	1.91 (48.41)	1.00 (25.40)
3/8"	4.99 (126.75)	3.00 (76.20)	4.99 (126.75)	5.45 (138.43)	1.38 (34.92)	2.00 (50.80)	1.00 (25.40)	0.41 (10.31)	0.28 (7.11)	2.50 (63.50)	1.38 (34.92)
1/2"	6.43 (163.32)	4.13 (104.78)	5.12 (130.05)	10.24* (260.10)	1.76 (44.70)	3.00 (76.20)	1.50 (38.10)	0.50 (12.70)	0.28 (7.11)	3.55 (90.17)	1.75 (44.45)
3/4"	10.13 (257.30)	4.50 (114.30)	11.00 (279.40)	22.00* (558.80)	2.47 (62.70)	3.25 (82.60)	1.63 (41.40)	0.69 (17.50)	0.41 (10.40)	4.50 (114.30)	3.00 (76.20)

Dimensions in inches are for reference only, subject to change.

Panel Hole Sizes

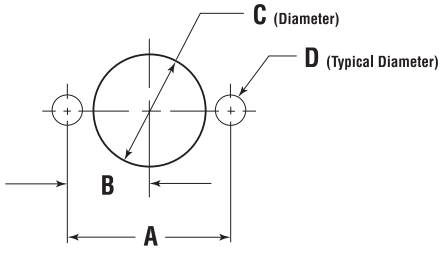

Orifice Size	Inches (mm)				Body Mounting
	A	B	C	D	
1/4"	1.50 (38.10)	0.75 (19.05)	1.06 (26.92)	0.28 (7.11)	1/4" - 20 Thread
3/8"	2.00 (50.80)	1.00 (25.40)	1.50 (38.10)	0.28 (7.11)	
1/2"	3.00 (76.20)	1.50 (38.10)	1.88 (47.63)	0.28 (7.11)	
3/4"	3.25 (82.60)	1.63 (41.40)	2.38 (60.30)	0.41 (10.40)	3/8" - 16 Thread

Dimensions in inches are for reference only, subject to change.

Tel: +45 63 12 83 00 | Email: ps@hymatik.com | www.hymatik.com | Hvidkaervej 27a, DK-5250 Odense SV, Denmark

Parker MPI™ Medium Pressure Products

3 Way Ball Valves

Orifice Size	Part Number 3 Way 90º Diverter	Part Number 3 Way 180º Selector	MAWP PSI	Connection	Inches					Repair Kit	
					Minimum Valve Orifice	Cv	Overall Length	A	M	Diverter	Selector
3/16"	4MP7-MAB3XPKD-V-SSP	4MP7-MAB3XPK-V-SSP	15,000	1/4" MPI	0.125	0.33	4.72	5.66	0.97	R3BD3S	R3B3S
	6MP7-MAB3XPKD-V-SSP	6MP7-MAB3XPK-V-SSP	15,000	3/8" MPI	0.188	0.50	4.72	5.66	0.97		
	8MP7-MAB3XPKD-V-SSP	8MP7-MAB3XPK-V-SSP	15,000	1/2" MPI	0.188	0.50	5.84	6.23	1.54		
	9MP7-MAB3XPKD-V-SSP	9MP7-MAB3XPK-V-SSP	15,000	9/16" MPI	0.188	0.50	5.84	6.23	1.54		
3/8"	6MP7-MAB6XPKD-V-SSP	6MP7-MAB6XPK-V-SSP	15,000	3/8" MPI	0.250	1.50	6.28	6.90	1.54	R3BD6S	R3B6S
	8MP7-MAB6XPKD-V-SSP	8MP7-MAB6XPK-V-SSP	15,000	1/2" MPI	0.312	2.00	6.28	6.90	1.54		
	9MP7-MAB6XPKD-V-SSP	9MP7-MAB6XPK-V-SSP	15,000	9/16" MPI	0.328	2.10	6.28	6.90	1.54		
1/2"	12MP7-MAB8XPKD-V-SSP	12MP7-MAB8XPK-V-SSP	10,000	3/4" MPI	0.500	4.40	10.85	8.35	2.22	R3BD8S	R3B8S
	16MP7-MAB8XPKD-V-SSP	16MP7-MAB8XPK-V-SSP	10,000	1" MPI	0.500	4.40	10.85	8.35	2.22		

For 2507 Super Duplex option, replace **-SS** with **-2507** and use **-XF** ferrule sets for sizes 12 and 16.
Standard Repair Kits include Viton (Fluorocarbon rubber) orings - use MAB option codes for different material requirements.
3/16" Side inlet pressure = 15,000 psi max, 3/8" Side inlet pressure = Not Recommended, 1/2" Side inlet pressure = 10,000 psi max
Note: Ball Valves are not recommended for critical gas applications such as Hydrogen, Helium, or other small molecular gases. Consult Factory for assistance.

Material of Construction

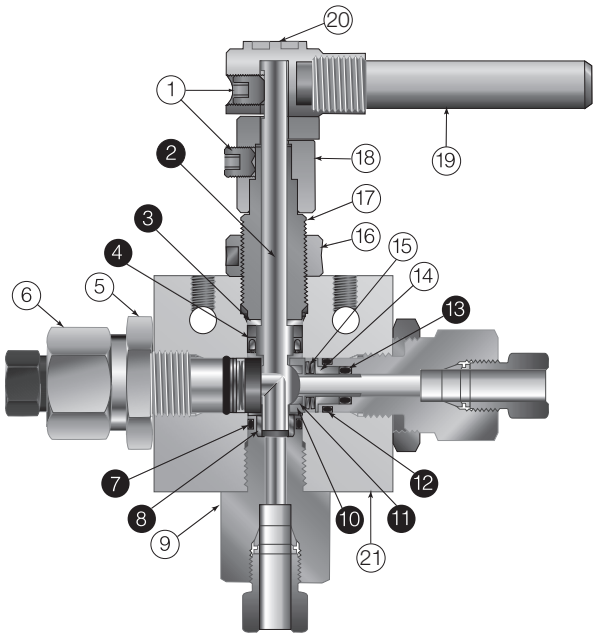

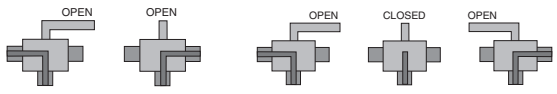

3-Way Diverter Valve 90° Turn

3-Way Ball Valve 180° Turn

Item#	Description	Material
1	Set Screw	Stainless
❷	One Piece Ball and Stem	316 SS
❸	Thrust Washer	Ampco 45
❹	Spring Energized Seal	Graphite/Carbon PTFE
5	Locknut	316 SS
6	Seat Gland	316 CW SS
❼	O-ring	Fluorocarbon Rubber
❽	Bearing	AMPCO 45
9	Bottom Gland	316 CW SS
❿	Seat Retainer	316 CW SS
⓫	Carbon Filled Peek Seats	Arlon 1260
⓬	O-ring	Fluorocarbon Rubber
⓭	O-ring	Fluorocarbon Rubber
14	Belleville Backup	316 CW SS
15	Belleville Washers	302 SS
16	Locking Piece	316 SS
17	Packing Gland	316 CW SS
18	Stopping Device	316 SS
19	Stainless Steel Handle	304 SS
20	Handle Hub	316 SS
21	Body	316 CW SS

❶ Typical spare parts found in Repair Kit

Dimensions

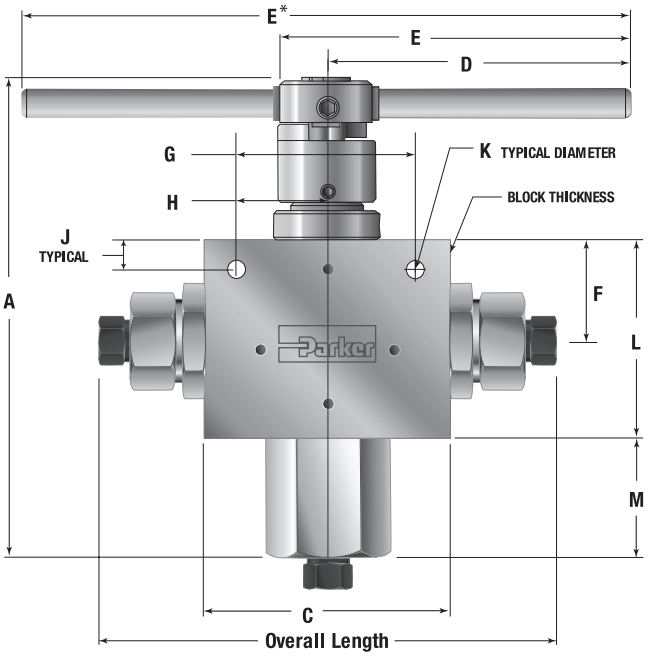

	Inches (mm)									
Orifice Size	C	D	E	F	G	H	J	K	L	Block Th'k
3/16"	2.50 (63.50)	3.37 (85.55)	3.90 (99.02)	1.12 (28.45)	1.50 (38.10)	0.75 (19.05)	0.43 (10.92)	0.28 (7.11)	2.26 (57.40)	1.00 (25.40)
3/8"	3.00 (76.20)	4.99 (126.82)	5.52 (140.32)	1.38 (34.93)	2.00 (50.80)	1.00 (25.40)	0.41 (10.31)	0.28 (7.11)	2.88 (73.03)	1.38 (34.92)
1/2"	4.13 (104.78)	5.09 (129.29)	10.18* (258.57)	1.66 (42.16)	3.00 (76.20)	1.50 (38.10)	0.50 (12.70)	0.28 (7.11)	3.34 (84.94)	1.75 (44.45)

Dimensions in inches are for reference only, subject to change.

Panel Hole Sizes

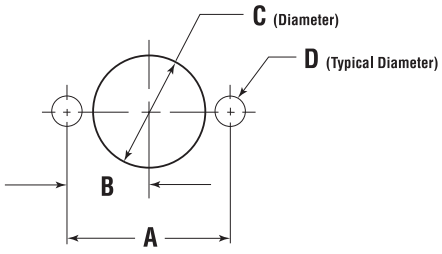

Orifice Size	Inches (mm)				Body Mounting
	A	B	C	D	
3/16"	1.50 (38.10)	0.75 (19.05)	1.06 (26.92)	0.28 (7.11)	1/4" - 20 Thread
3/8"	2.00 (50.80)	1.00 (25.40)	1.50 (38.10)	0.28 (7.11)	
1/2"	3.00 (76.20)	1.50 (38.10)	1.88 (47.63)	0.28 (7.11)	

Dimensions in inches are for reference only, subject to change.

Tel: +45 63 12 83 00 | Email: ps@hymatik.com | www.hymatik.com | Hvidkaervej 27a, DK-5250 Odense SV, Denmark

Parker MPI™ Medium Pressure Products

MADBB Double Block and Bleed Ball Valves

Orifice Size	Part Number	MAWP PSI	Connection	Inches Minimum Valve Orifice	C_V
3/8"	4MP7-MADBB6LPK-V-SS	15,000	1/4" MPI	0.125	.34
	6MP7-MADBB6LPK-V-SS	15,000	3/8" MPI	0.250	1.8
	8MP7-MADBB6LPK-V-SS	15,000	1/2" MPI	0.312	2.1
	9MP7-MADBB6LPK-V-SS	15,000	9/16" MPI	0.322	2.4
5/8"	12MP7-MADBB10LPK-V-SS	15,000	3/4" MPI	0.531	6.4
	16MP7-MADBB10LPK-V-SS	12,500	1" MPI	0.625	8.1

For 2507 Super Duplex option, replace **-SS** with **-2507** and use **-XF** ferrule sets for sizes 12 and 16 and increase MAWP to 15,000 psi.
Dimensions in inches are for reference only, subject to change. All vent connections are sized at 1/4 FNPT. Other vent connections are available upon request. Please consult your local representative.

Material of Construction

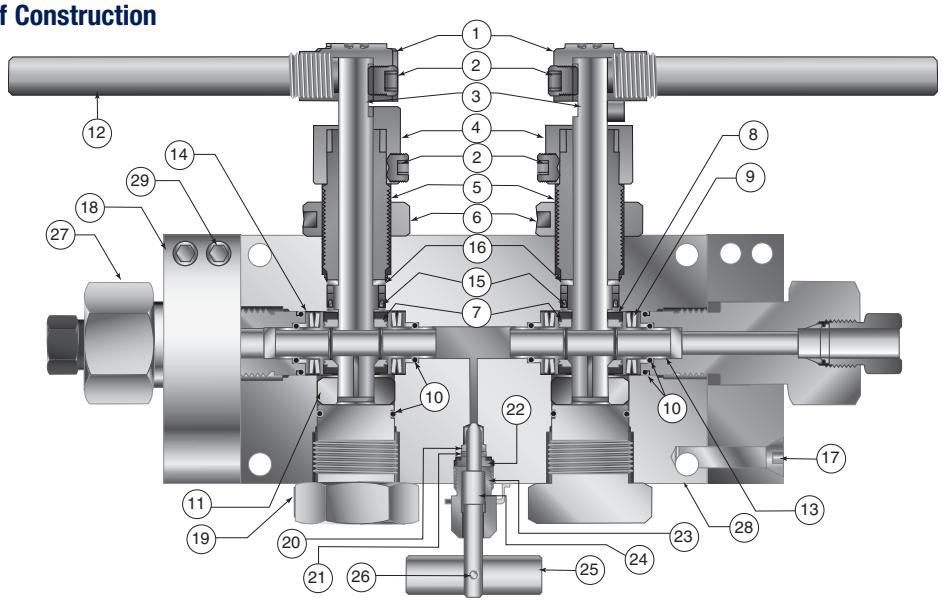

Item#	Description	Material
1	Handle Hub	316 SS
2	Set Screw	Stainless
3	One piece Ball and Stem	316 CW SS
4	Stopping Device	316 SS
5	Packing Gland	316 CW SS
6	Locking Piece	316 SS
7	Seat	Carbon Filled Peek
8	Seat Retainer	15-5 PH SS
9	Belleville Washer	17-7 PH
10	O-Ring	Viton
11	Bottom Bearing	Peek
12	Handle	304 SS
13	Stress Riser Backup	15-5 PH SS
14	Belleville Washer Backup	316 CW SS
15	Spring Energized Seal	Graphite/Carbon PTFE

Item#	Description	Material
16	Thrust Washer	Ampco 45
17	Screw	316 SS
18	Locking Device	316 SS
19	Bottom Gland	316 CW SS
20	Bottom Washer	316 SS
21	Packing	PTFE
22	Packing Washer	Ampco 45
23	Packing Gland	316 SS
24	Stem	316 SS
25	Handle	316 SS
26	Spring Pin	18-8 SS
27	Seat Gland	316 CW SS
28	Body	316 SS
29	Screw	316 SS

Note: MADBB Valves cannot be repaired in field and as such, no repair kits are identified

Dimensions

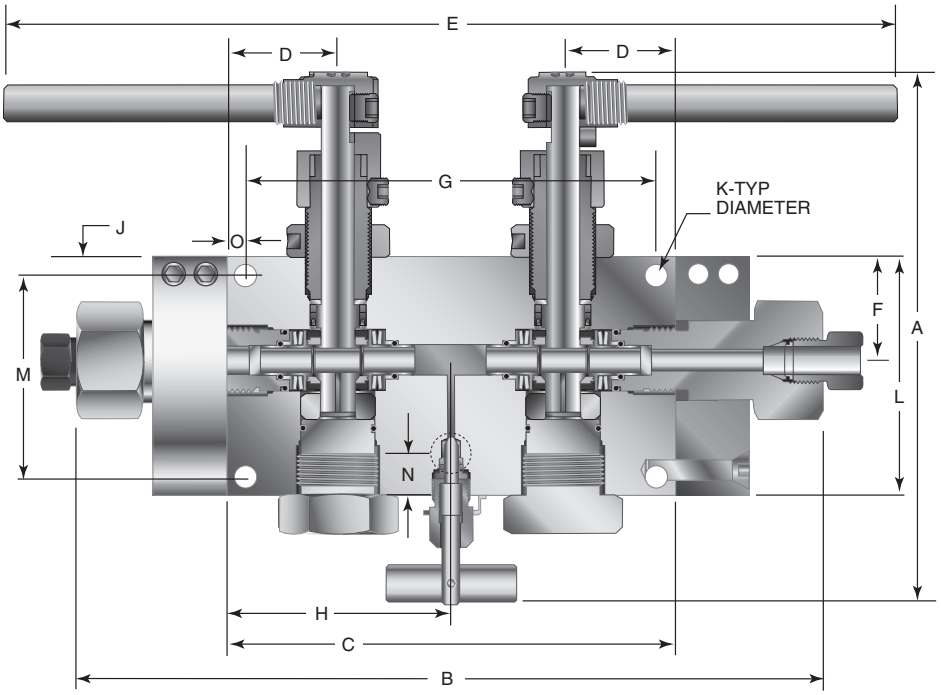

Orifice Size	Inches (mm)														
	A	B	C	D	E	F	G	H	J	K	L	M	N Vent Connection	O	Block Th'k
3/8"	7.14 (181.35)	11.17 (283.72)	6.00 (152.44)	1.50 (38.10)	12.98 (329.69)	1.38 (35.11)	5.00 (127.00)	3.00 (76.20)	0.41 (10.41)	0.28 (7.11)	3.19 (81.15)	2.38 (60.55)	0.65 (16.54)	0.50 (12.72)	1.75 (44.45)
5/8"	13.02 (330.71)	15.40 (391.16)	10.50 (266.70)	2.66 (67.67)	27.45 (697.23)	2.53 (64.36)	8.69 (220.73)	5.25 (133.35)	0.72 (18.32)	0.41 (10.41)	5.25 (133.35)	3.81 (96.93)	1.75 (44.45)	0.91 (23.11)	3.00 (76.20)

Dimensions in inches are for reference only, subject to change.

Panel Hole Sizes

DBB6 Panel Hole Size

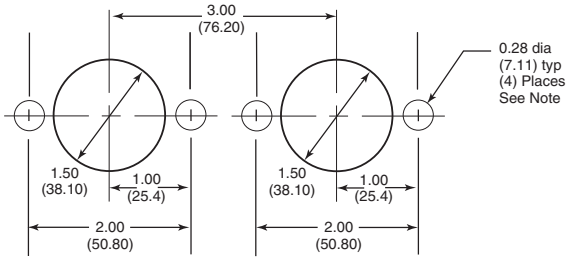

All dimensions are for reference only and are subject to change without notice.

Note: Body Top Mount 1/4-20 Thread

DBB10 Panel Hole Size

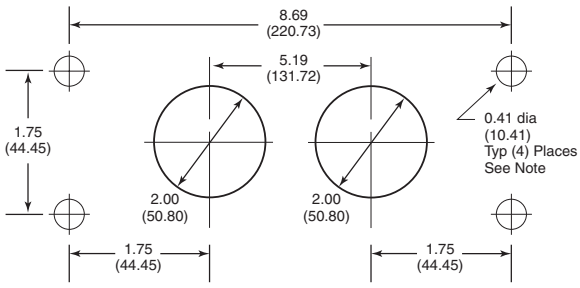

All dimensions are for reference only and are subject to change without notice.

Note: Body Top Mount 3/8-16 Thread

MPI™ Medium Pressure Products

How to Order MADBB Series Ball Valves

The correct part number is easily derived from the following example and ordering chart. The nine product characteristics required are coded as shown in the chart.

Typical part number example: **4MP7-MADBB6LPK-V-SS-LD** (part number is created based on customer selection of product parameters, see below for example)

4	MP7	-	MADBB	6	L	PK	-	V	-	SS	-	LD
Inlet/Outlet Connection Size	Connection Type		Valve Series	Orifice Size	Valve Type	Seat Material		Seal Material		Body Material		Options
4 = 1/4" **6** = 3/8" **8** = 1/2" **9** = 9/16" **12** = 3/4" **16** = 1"	**MP7=** Parker MPI™		**MADBB**	**6** = 3/8" **10** = 5/8"	**L=** 2 Way	**PK=** PEEK		**V***=** Fluorocarbon Rubber **KZ=** FFKM Highly Fluorinated Fluorocarbon Rubber **BN=** Nitrile Rubber **EPR=** Ethylene Propylene Rubber		**SS=** Stainless Steel **2507=** Super Duplex		**LD=** Lock Out Device **XF=** High Strength Ferrules for 2507 SD sizes 12 & 16 only
								*** Standard o-ring material				

Options

Standard valve has Fluorocarbon Rubber o-rings [0° to 400°F (-18° to 204°C)].

KZ - Standard valve with FFKM Highly Fluorinated Fluorocarbon Rubber o-rings [30° to 500°F (0° to 260°C)].

BN - Standard valve with Buna-N (Nitrile) Rubber o-rings [-20° to 250°F (-29° to 121°C).

EPR - Standard valve with Ethylene Propylene Rubber o-rings [-20° to 250°F (-29° to 121°C).

LD - Standard valve with factory-installed lock out device.

Tel: +45 63 12 83 00 | Email: ps@hymatik.com | www.hymatik.com | Hvidkaervej 27a, DK-5250 Odense SV, Denmark

Ball Valves: MAB Series Actuators

Pneumatic and Electric



Parker MAB Series ball valves can be supplied with either pneumatic or electric operators for automated or remote operation.

Pneumatic and electric operators can be supplied with a variety of features and options. Operators are sized for each valve series to provide reliable and trouble free operation. Listed below are the operator features and available options.

Features:

Pneumatic Operators

- Air-to-open/spring-to-close (FC)
- Air-to-close/spring-to-open (FO)
- Air-to-open and close (double acting) (AD)
- Limit switches or limit switches with visual indicators available
- High temperature option available.
- Stainless steel housing for corrosive applications available.
- Optional solenoid valve available
- Standard anodized aluminum housing
- Optional epoxy coated housing available

Electric Operators

- Interface with control systems for automated operation and monitoring
- 120 & 220 VAC, 50/60 Hz standard
- 24VDC
- ATEX Flameproof, Explosion Proof options available
- CE mark available

Applications:

- Laboratories
- Pilot Plants
- Test Stands
- Water Blasting Pumping Units
- Control Panels
- Chemical Research
- High Volume Chemical Injection Skids

Tel: +45 63 12 83 00 | Email: ps@hymatik.com | www.hymatik.com | Hvidkaervej 27a, DK-5250 Odense SV, Denmark

Ball Valves: MAB Series Actuators

Pneumatic

Air to Open/Spring to Close - Pneumatic Operated Ball Valves

Add the suffix **-FC**, or **-FO** to the appropriate valve catalog number for a complete valve assembly.

VALVE SERIES	Dimensions Data - inches (mm)										No Load Time OPEN/CLOSE Seconds/90°	Minimum Required Air Pressure
	A	B	C	D	E	F	G	H	I	J		
MAB4L-FC/FO	6.85 (173.99)	3.20 (81.28)	2.50 (63.50)	1.25 (31.75)	1.00 (25.40)	0.50 (12.70)	0.28 (7.11)	1.30 (33.02)	2.50 (63.50)	1.88 (47.75)	0.5	80 psi (5.51 bar)
MAB6L-FC/FO	7.28 (184.91)	3.86 (98.04)	3.00 (76.20)	1.50 (38.10)	1.50 (38.10)	0.75 (19.05)	0.34 (8.64)	1.59 (40.39)	3.00 (76.20)	2.10 (53.34)	1.0	80 psi (5.51 bar)
MAB8L-FC/FO	9.38 (238.25)	4.62 (117.35)	3.00 (76.20)	1.50 (38.10)	2.00 (50.80)	1.00 (25.40)	0.53 (13.46)	2.00 (50.80)	3.00 (76.20)	2.48 (62.99)	1.5	80 psi (5.51 bar)
MAB12L-FC/FO	17.30 (439.42)	8.00 (203.20)	5.00 (127.00)	2.50 (63.50)	3.25 (82.55)	1.63 (41.40)	0.53 (13.46)	3.54 (89.92)	5.00 (127.00)	3.57 (90.68)	3.0	80 psi (5.51 bar)
MAB3XD-FC/FO	6.85 (173.99)	3.20 (81.28)	2.50 (63.50)	1.25 (31.75)	1.00 (25.40)	0.50 (12.70)	0.28 (7.11)	1.30 (33.02)	2.50 (63.50)	1.88 (47.75)	0.5	80 psi (5.51 bar)
MAB6XD-FC/FO	7.28 (184.91)	3.86 (98.04)	3.00 (76.20)	1.50 (38.10)	1.50 (38.10)	0.75 (19.05)	0.34 (8.64)	1.59 (40.39)	3.00 (76.20)	2.10 (53.34)	1.0	80 psi (5.51 bar)
MAB8XD-FC/FO	9.38 (238.25)	4.62 (117.35)	3.00 (76.20)	1.50 (38.10)	2.00 (50.80)	1.00 (25.40)	0.53 (13.46)	2.00 (50.80)	3.00 (76.20)	2.48 (62.99)	1.5	80 psi (5.51 bar)

NOTE:

- Maximum allowable air pressure is 150 psi (10.34 bar)
- 1/4" NPT female air connection
- FC: Air to open/spring to close
- FO: Air to close/spring to open
- Actuators operating temperature: -10°F to 176°F (-23°C to 80°C)
- High temperature actuator option available, consult factory
- Stainless steel housing actuator models available, consult factory
- Actuators available with limit switches and visual indicators.
- Epoxy coated housing available.
- Solenoids available, direct or nipple mount.
- Corrosion resistant anodized aluminum housing.

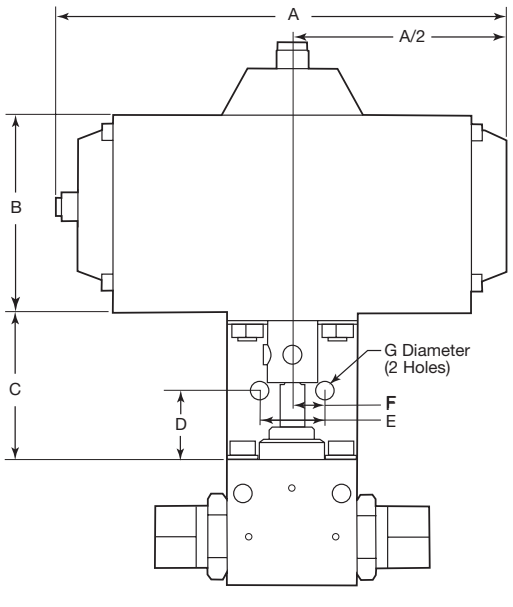

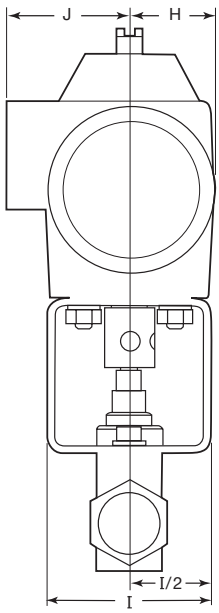

MPI™ Medium Pressure Valves

Ball Valves: MAB Series Actuators

Pneumatic

Air to Open and Close - Pneumatic Operated Ball Valves

Add the suffix **-AD** to the appropriate valve catalog number for a complete valve assembly.

VALVE SERIES	Dimensions Data - inches (mm)										No Load Time OPEN/CLOSE Seconds/90°	Minimum Required Air Pressure
	A	B	C	D	E	F	G	H	I	J		
MAB4L-AD	6.85 (173.99)	3.20 (81.28)	2.50 (63.50)	1.25 (31.75)	1.00 (25.40)	0.50 (12.70)	0.28 (7.11)	1.30 (33.02)	2.50 (63.50)	1.88 (47.75)	0.5	80 psi (5.51 bar)
MAB6L-AD	6.85 (173.99)	3.20 (81.28)	3.00 (76.20)	1.50 (38.10)	1.50 (38.10)	0.75 (19.05)	0.34 (8.64)	1.30 (33.02)	3.00 (76.20)	1.88 (47.75)	0.5	80 psi (5.51 bar)
MAB8L-AD	7.28 (184.91)	3.86 (98.04)	3.00 (76.20)	1.50 (38.10)	2.00 (50.80)	1.00 (25.40)	0.53 (13.46)	1.59 (40.39)	3.00 (76.20)	2.10 (53.34)	1.0	80 psi (5.51 bar)
MAB12L-AD	11.82 (300.23)	6.10 (154.94)	5.00 (127.00)	2.50 (63.50)	3.25 (82.55)	1.63 (41.40)	0.53 (13.46)	2.55 (64.77)	5.00 (127.00)	2.55 (64.77)	2.5	80 psi (5.51 bar)
MAB3X-AD	9.50 (241.30)	3.59 (91.19)	2.50 (63.50)	1.25 (31.75)	1.00 (25.40)	0.50 (12.70)	0.28 (7.11)	1.37 (34.80)	2.50 (63.50)	1.99 (50.55)	-	80 psi (5.51 bar)
MAB6X-AD	9.50 (241.30)	3.59 (91.19)	3.00 (76.20)	1.50 (38.10)	1.50 (38.10)	0.75 (19.05)	0.34 (8.64)	1.37 (34.80)	3.00 (76.20)	1.99 (50.55)	-	80 psi (5.51 bar)
MAB8X-AD	10.21 (259.33)	4.47 (113.54)	3.00 (76.20)	1.50 (38.10)	2.00 (50.80)	1.00 (25.40)	0.53 (13.46)	1.67 (42.42)	3.00 (76.20)	2.10 (53.34)	-	80 psi (5.51 bar)
MAB3XD-AD	6.85 (173.99)	3.20 (81.28)	2.50 (63.50)	1.25 (31.75)	1.00 (25.40)	0.50 (12.70)	0.28 (7.11)	1.30 (33.02)	2.50 (63.50)	1.88 (47.75)	0.5	80 psi (5.51 bar)
MAB6XD-AD	6.85 (173.99)	3.20 (81.28)	3.00 (76.20)	1.50 (38.10)	1.50 (38.10)	0.75 (19.05)	0.34 (8.64)	1.30 (33.02)	3.00 (76.20)	1.88 (47.75)	0.5	80 psi (5.51 bar)
MAB8XD-AD	7.28 (184.91)	3.86 (98.04)	3.00 (76.20)	1.50 (38.10)	2.00 (50.80)	1.00 (25.40)	0.53 (13.46)	1.59 (40.39)	3.00 (76.20)	2.10 (53.34)	1.0	80 psi (5.51 bar)

NOTE:

- Maximum allowable air pressure is 150 psi (10.34 bar)
- 1/4" NPT female air connection
- AD: Air to open/Air to close (double acting)
- Actuators available with limit switches and visual indicators.
- Actuators operating temperature: -10°F to 176°F (-23°C to 80°C)
- High temperature actuator option available, consult factory
- Stainless steel housing actuator models available, consult factory
- Epoxy coated housing available.
- Solenoids available, direct or nipple mount.
- Corrosion resistant anodized aluminum housing.

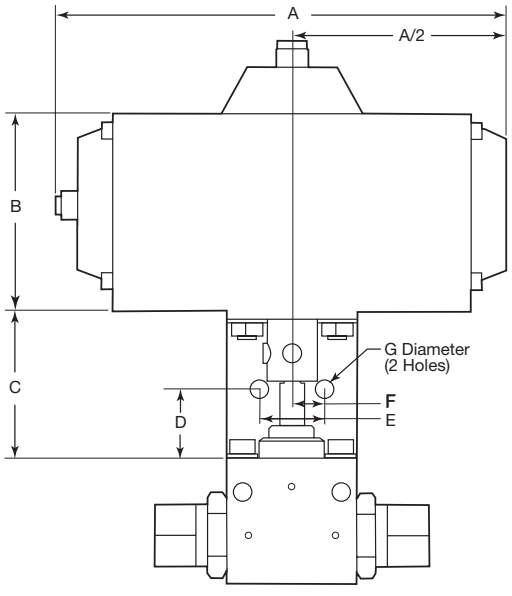

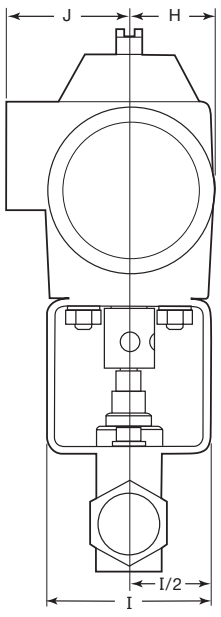

Ball Valves: MAB Series Actuators

Electric

3/16" to 3/8" - Electric Operated Ball Valves, Weather Proof NEMA 4x

Add the suffix **-E01**, **-E02** or **-E03** to the appropriate valve catalog number for a complete valve assembly.

VALVE SERIES	Dimensions Data - inches (mm)						No Load Time OPEN/CLOSE Seconds/90°	VOLTAGE
	A	B	C	D	E	F		
MAB4L-E01	2.50 (63.50)	1.25 (31.75)	1.00 (25.4)	0.50 (12.70)	0.28 (7.11)	2.50 (63.50)	3	120 VAC
MAB4L-E02							3	240 VAC
MAB4L-E03							3	24 VDC
MAB6L-E01	3.00 (76.2)	1.50 (38.1)	1.50 (38.1)	0.75 (19.05)	0.34 (8.64)	3.00 (76.2)	7	120 VAC
MAB6L-E02							7	240 VAC
MAB6L-E03							5	24 VDC
MAB3X-E01	2.50 (63.50)	1.25 (31.75)	1.00 (25.4)	0.50 (12.70)	0.28 (7.11)	2.50 (63.50)	3	120 VAC
MAB3X-E02							3	240 VAC
MAB6X-E01	3.00 (76.2)	1.50 (38.1)	1.50 (38.1)	0.75 (19.05)	0.34 (8.64)	3.00 (76.2)	7	120 VAC
MAB6X-E02							7	240 VAC
MAB3XD-E01	2.50 (63.50)	1.25 (31.75)	1.00 (25.4)	0.50 (12.70)	0.28 (7.11)	2.50 (63.50)	3	120 VAC
MAB3XD-E02							3	240 VAC
MAB3XD-E03							3	24 VDC
MAB6XD-E01	3.00 (76.2)	1.50 (38.1)	1.50 (38.1)	0.75 (19.05)	0.34 (8.64)	3.00 (76.2)	7	120 VAC
MAB6XD-E02							7	240 VAC
MAB6XD-E03							5	24 VDC

NOTE:
- E01:Electric 120 VAC
- E02:Electric 240 VAC
- E03:Electric 24 VDC
- Actuator operating temperature: 0ºF to 160ºF (-18ºC to 71ºC)
- Powder coated aluminum housing
- CE & CSA approved for NEMA 4 and 4x
- Manual override
- 1/2" NPT female conduit connection
- For other options consult factory

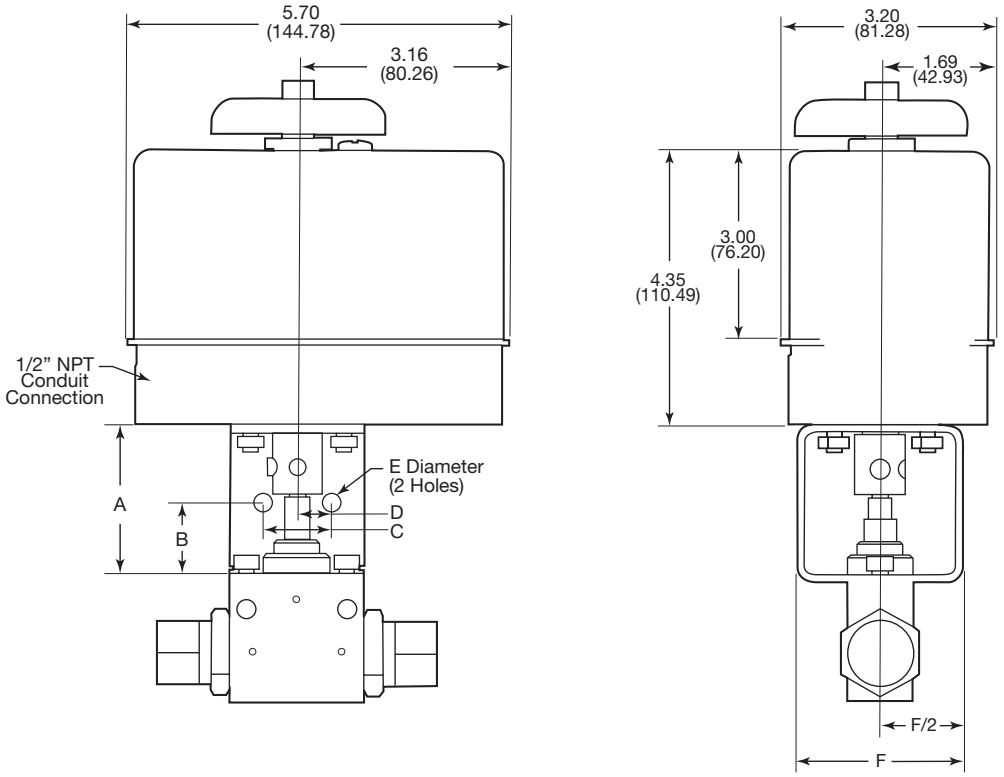

Tel: +45 63 12 83 00 | Email: ps@hymatik.com | www.hymatik.com | Hvidkaervej 27a, DK-5250 Odense SV, Denmark

Ball Valves: MAB Series Actuators

Electric

1/2" - Electric Operated Ball Valves, Weather Proof NEMA 4x

Add the suffix **-E01**, **-E02** or **-E03** to the appropriate valve catalog number for a complete valve assembly.

VALVE SERIES	Dimensions Data - inches (mm)						No Load Time OPEN/CLOSE Seconds/90°	VOLTAGE
	A	B	C	D	E	F		
MAB8L-E01	3.00 (76.2)	1.50 (38.1)	2.00 (50.8)	1.00 (25.40)	0.53 (13.46)	3.00 (76.2)	5	120 VAC
MAB8L-E02							5	240 VAC
MAB8L-E03							5	24 VDC
MAB8X-E01	3.00 (76.2)	1.50 (38.1)	2.00 (50.80)	1.00 (25.40)	0.53 (13.46)	3.00 (76.2)	5	120 VAC
MAB8X-E02							5	240 VAC
MAB8XD-E01	3.00 (76.2)	1.50 (38.1)	2.00 (50.80)	1.00 (25.40)	0.53 (13.46)	3.00 (76.2)	5	120 VAC
MAB8XD-E02							5	240 VAC
MAB8XD-E03							5	24 VDC

NOTE:
- E01:Electric 120 VAC
- E02:Electric 240 VAC
- E03:Electric 24 VDC
- Actuator operating temperature: 0ºF to 160ºF (-18ºC to 71ºC)
- Powder coated aluminum housing
- CE & CSA approved for NEMA 4 and 4x
- Manual override
- 1/2" NPT female conduit connection
- For other options consult factory

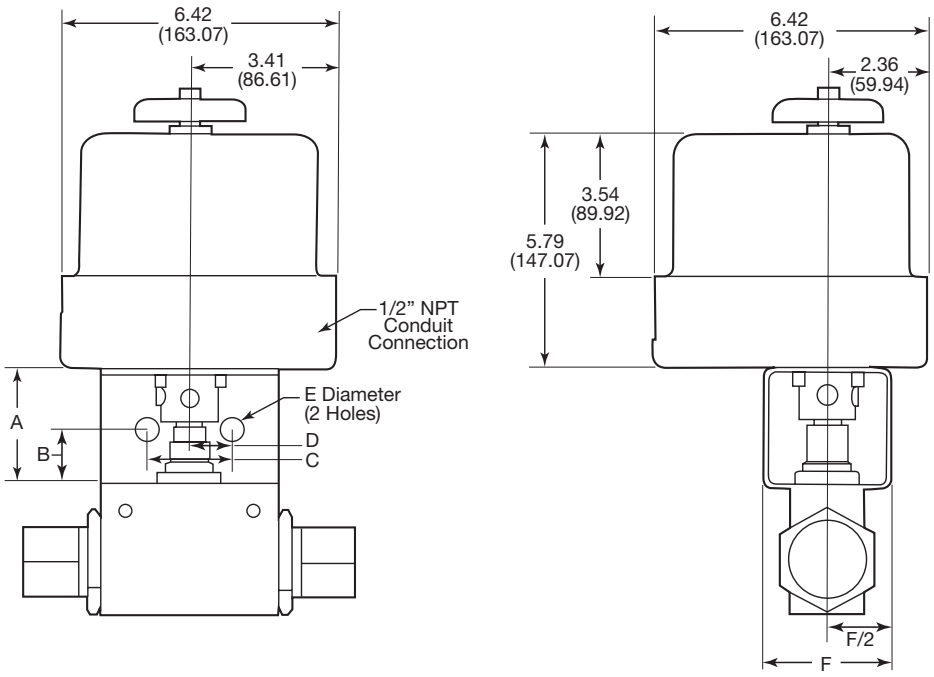

Tel: +45 63 12 83 00 | Email: ps@hymatik.com | www.hymatik.com | Hvidkaervej 27a, DK-5250 Odense SV, Denmark

Ball Valves: MAB Series Actuators

Electric

3/4" - Electric Operated Ball Valves, Weather Proof NEMA 4x

Add the suffix **-E01** or **-E02** to the appropriate valve catalog number for a complete valve assembly.

VALVE SERIES	Dimensions Data - inches (mm)						No Load Time OPEN/CLOSE Seconds/90°	VOLTAGE
	A	B	C	D	E	F		
MAB12L-E01	5.00 (127.00)	2.50 (63.50)	3.25 (82.55)	1.63 (41.40)	0.53 (13.46)	5.00 (127.00)	10	120 VAC
MAB12L-E02							10	240 VAC

NOTE:
- E01:Electric 120 VAC
- E02:Electric 240 VAC
- E03:Electric 24 VDC
- Actuator operating temperature: 0ºF to 160ºF (-18ºC to 71ºC)
- Powder coated aluminum housing
- CE & CSA approved for NEMA 4 and 4x
- Manual override
- 1/2" NPT female conduit connection
- For other options consult factory

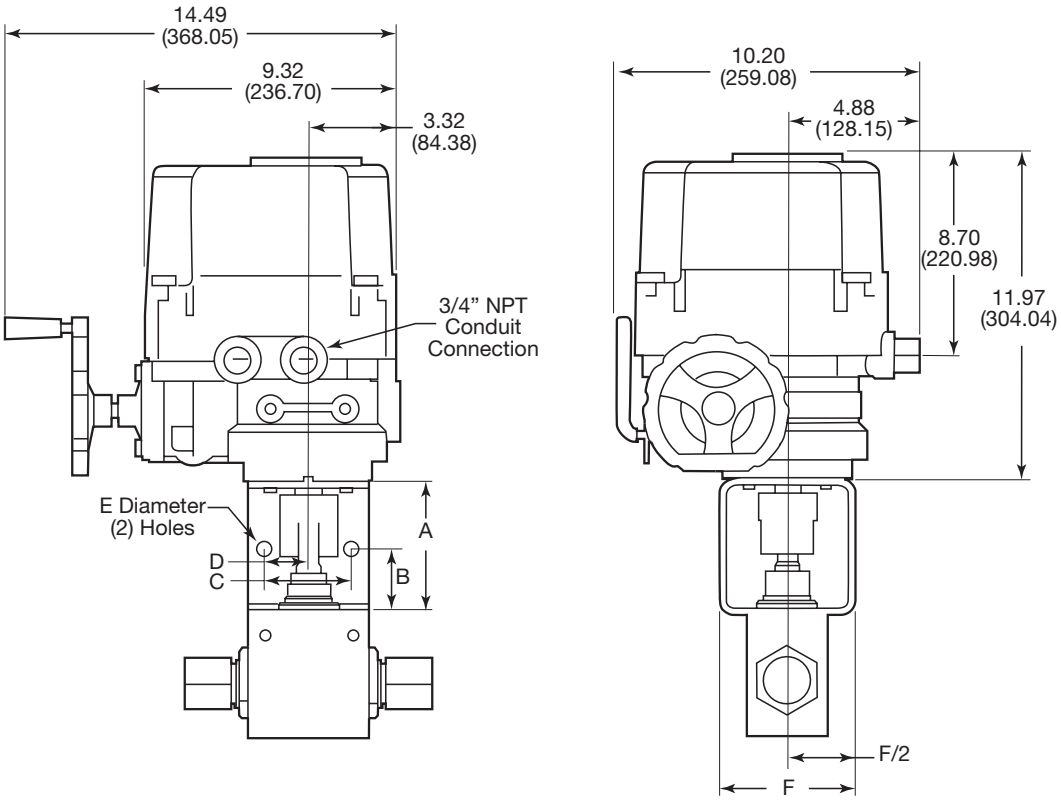

Tel: +45 63 12 83 00 | Email: ps@hymatik.com | www.hymatik.com | Hvidkaervej 27a, DK-5250 Odense SV, Denmark

Ball Valves: MAB Series Actuators

Electric

3/16" to 3/8" - Electric Explosion Proof Operated Ball Valves

Add the suffix **-E01X**, **-E02X** or **-E03X** to the appropriate valve catalog number for a complete valve assembly.

VALVE SERIES	Dimensions Data - inches (mm)						No Load Time OPEN/CLOSE Seconds/90°	VOLTAGE
	A	B	C	D	E	F		
MAB4L-E01X	3.00 (76.2)	1.50 (38.1)	1.00 (25.40)	0.50 (12.70)	0.28 (7.11)	3.00 (76.2)	7	120 VAC
MAB4L-E02X							7	240 VAC
MAB4L-E03X							7	24 VDC
MAB6L-E01X	3.00 (76.2)	1.50 (38.1)	1.50 (38.1)	0.75 (19.05)	0.34 (8.64)	3.00 (76.2)	7	120 VAC
MAB6L-E02X							7	240 VAC
MAB6L-E03X							7	24 VDC
MAB3XD-E01X	3.00 (76.2)	1.50 (38.1)	1.00 (25.40)	0.50 (12.70)	0.28 (7.11)	3.00 (76.2)	7	120 VAC
MAB3XD-E02X							7	240 VAC
MAB3XD-E03X							7	24 VDC
MAB6XD-E01X	3.00 (76.2)	1.50 (38.1)	1.50 (38.1)	0.75 (19.05)	0.34 (8.64)	3.00 (76.2)	7	120 VAC
MAB6XD-E02X							7	240 VAC
MAB6XD-E03X							7	24 VDC

NOTE:

- E01X:Electric 120 VAC
- E02X:Electric 240 VAC
- E03X:Electric 24 VDC
- Actuator operating temperature: -4ºF to 158ºF (-20ºC to 70ºC)
- Powder coated aluminum housing
- CE & CSA approved
- Manual override
- 3/4" NPT female conduit connection
- Explosion proof enclosure II 2 G, EEx-d IIB T4, IP67, ATEX Approved
- Designed to comply with NEMA 7 Explosion Proof
- Watertight enclosure (IP68 10M 72HR)
- For other options consult factory

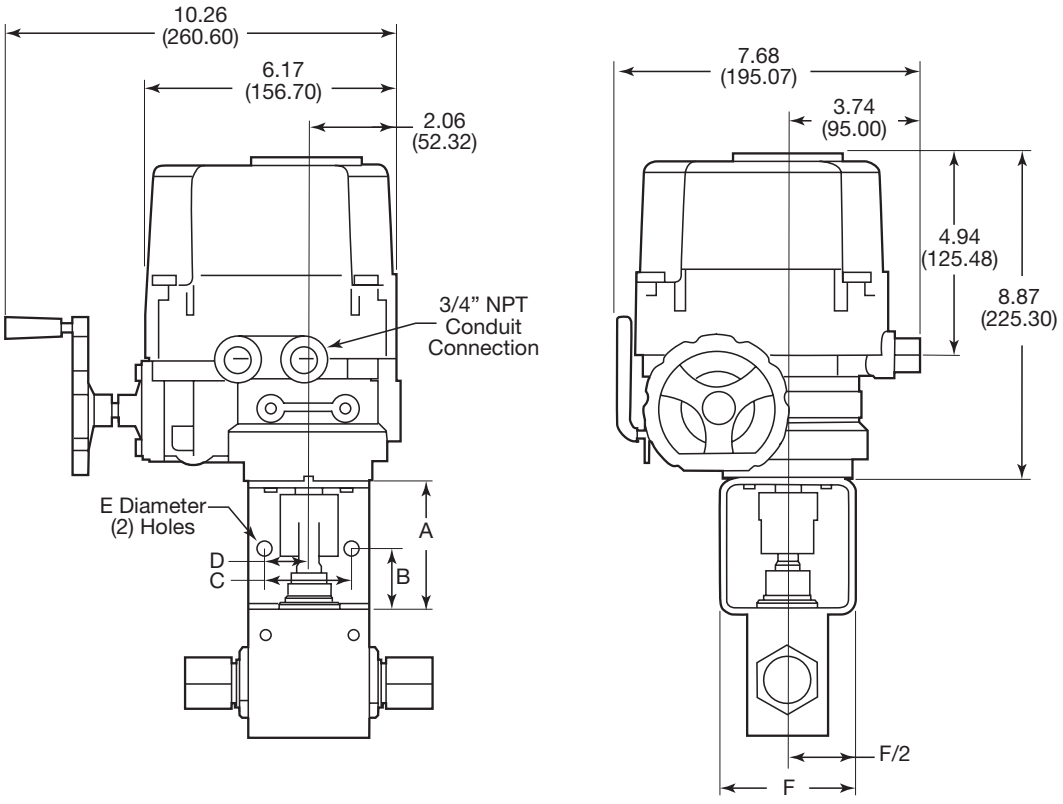

Tel: +45 63 12 83 00 | Email: ps@hymatik.com | www.hymatik.com | Hvidkaervej 27a, DK-5250 Odense SV, Denmark

Ball Valves: MAB Series Actuators

Electric

1/2" - Electric Explosion Proof Operated Ball Valves

Add the suffix **-E01X**, **-E02X** or **-E03X** to the appropriate valve catalog number for a complete valve assembly.

VALVE SERIES	Dimensions Data - inches (mm)						No Load Time OPEN/CLOSE Seconds/90°	VOLTAGE
	A	B	C	D	E	F		
MAB8L-E01X	3.00 (76.2)	1.50 (38.1)	2.00 (50.8)	1.00 (25.40)	0.56 (14.22)	3.00 (76.2)	7	120 VAC
MAB8L-E02X							7	240 VAC
MAB8L-E03X							7	24 VDC
MAB8XD-E01X	3.00 (76.2)	1.50 (38.1)	2.00 (50.80)	1.00 (25.40)	0.56 (14.22)	3.00 (76.2)	7	120 VAC
MAB8XD-E02X							7	240 VAC
MAB8XD-E03X							7	24 VDC

NOTE:
- E01X:Electric 120 VAC
- E02X:Electric 240 VAC
- E03X:Electric 24 VDC
- Actuator operating temperature: -4ºF to 158ºF (-20ºC to 70ºC)
- Powder coated aluminum housing
- CE & CSA approved
- Manual override
- 3/4" NPT female conduit connection
- Explosion proof enclosure II 2 G, EEx-d IIB T4, IP67, ATEX Approved
- Designed to comply with NEMA 7 Explosion Proof
- Watertight enclosure (IP68 10M 72HR)
- For other options consult factory

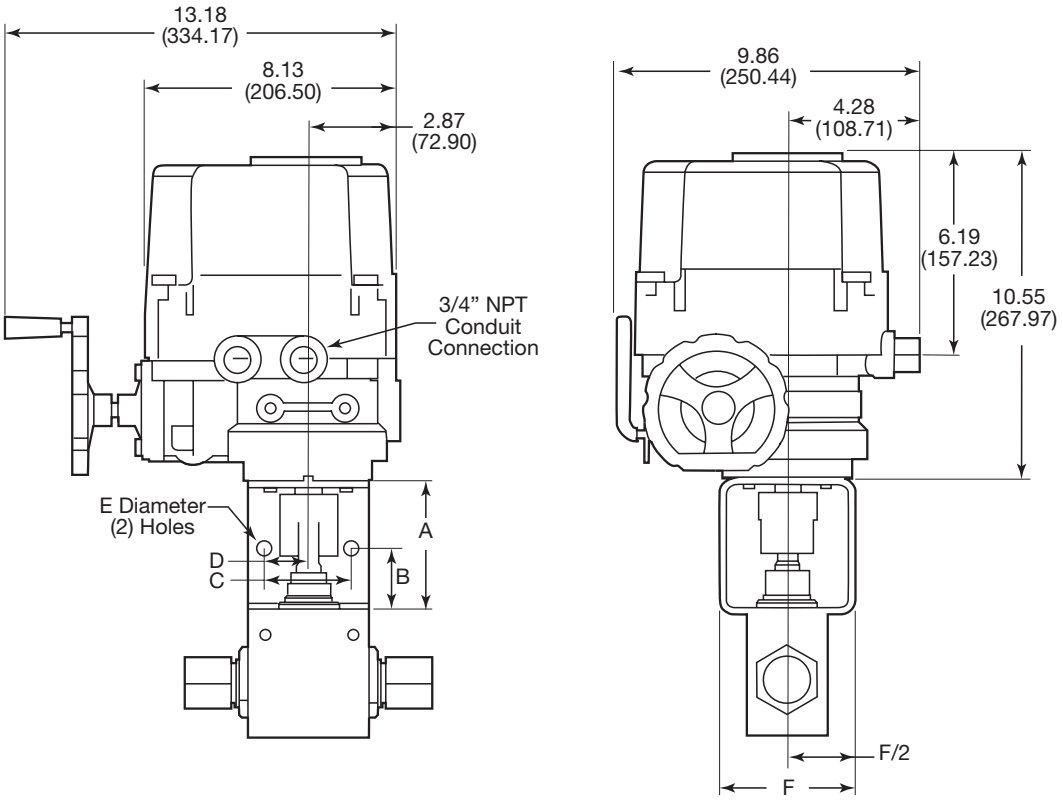

Tel: +45 63 12 83 00 | Email: ps@hymatik.com | www.hymatik.com | Hvidkaervej 27a, DK-5250 Odense SV, Denmark

Ball Valves: MAB Series Actuators

Electric

3/4" - Electric Explosion Proof Operated Ball Valves

Add the suffix **-E01X** or **-E02X** to the appropriate valve catalog number for a complete valve assembly.

VALVE SERIES	Dimensions Data - inches (mm)						No Load Time OPEN/CLOSE Seconds/90°	VOLTAGE
	A	B	C	D	E	F		
MAB12L-E01X	5.00 (127.00)	2.50 (63.50)	3.25 (82.55)	1.63 (41.40)	0.53 (13.46)	5.00 (127.00)	8.5	120 VAC
MAB12L-E02X							8.5	240 VAC

NOTE:
- E01X:Electric 120 VAC
- E02X:Electric 240 VAC
- Actuator operating temperature: -4ºF to 158ºF (-20ºC to 70ºC)
- Powder coated aluminum housing
- CE & CSA approved
- Manual override
- 3/4" NPT female conduit connection
- Explosion proof enclosure II 2 G, EEx-d IIB T4, IP67, ATEX Approved
- Designed to comply with NEMA 7 Explosion Proof
- Watertight enclosure (IP68 10M 72HR)
- For other options consult factory

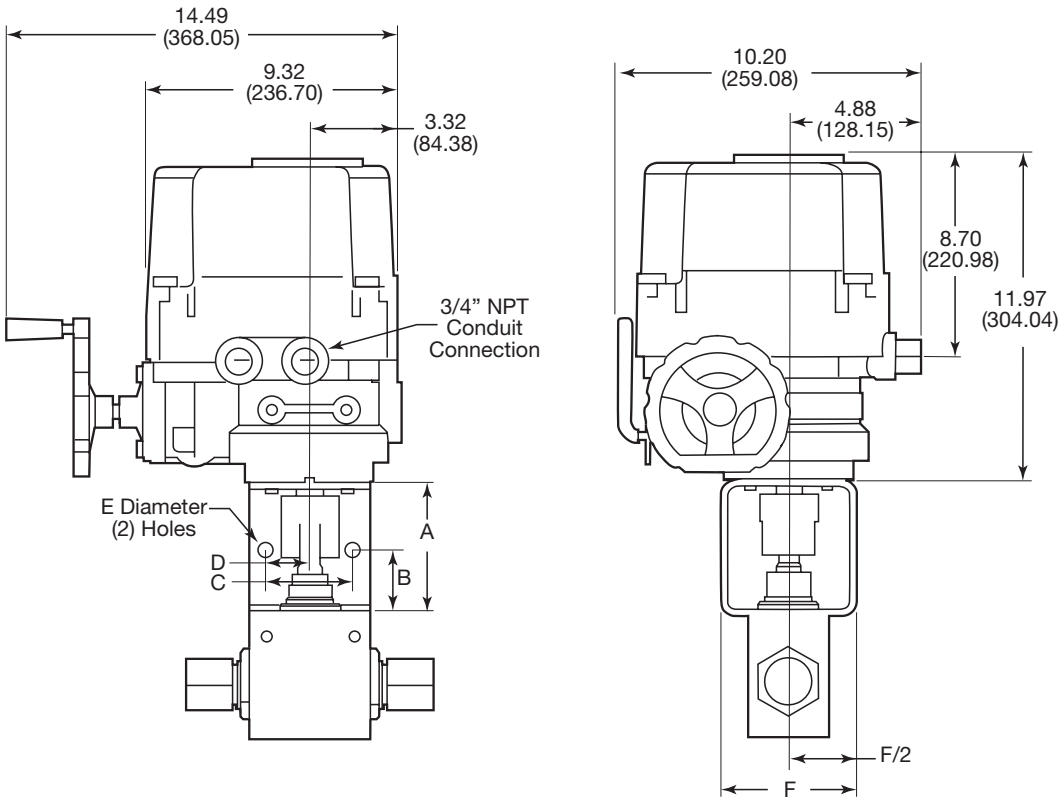

Tel: +45 63 12 83 00 | Email: ps@hymatik.com | www.hymatik.com | Hvidkaervej 27a, DK-5250 Odense SV, Denmark

MAF Series Dual Disc Line Filter

(Replaces MPF Series Filters)

Parker's MAF Series Dual-Disc Line Filters are utilized in numerous industrial, chemical processing, aerospace, nuclear and other applications. With the dual-disc design, large contaminant particles are trapped by the upstream filter element before they can reach and clog the smaller micron-size downstream element. Filter elements can be easily replaced.

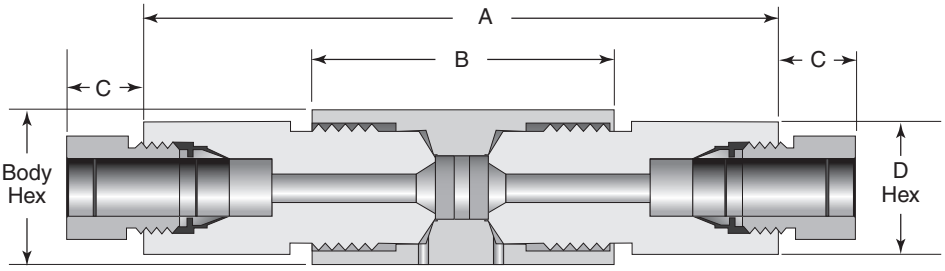

						Dimensions - inches (mm)				
Tubing	Parker Part No.**	Pressure psi (bar)	Orifice inch (mm)	Micron Size	Connection	A	B	C	D	Hex
1/2" O.D.	8MP7-MAFL-35/65-SS	15,000 (1034)	0.250 (6.35)	35/65	1/2" MPI	5.99 (152.15)	2.69 (68.33)	.69 (17.53)	1.19 (30.23)	1.38 (35.05)
	8MP7-MAFL-5/10-SS			5/10						
	8MP7-MAFL-10/35-SS			10/35						
9/16" O.D.	9MP7-MAFL-35/65-SS	15,000 (1034)	0.250 (6.35)	35/65	9/16" MPI	5.99 (152.15)	2.69 (68.33)	.75 (19.05)	1.19 (30.23)	1.38 (35.05)
	9MP7-MAFL-5/10-SS			5/10						
	9MP7-MAFL-10/35-SS			10/35						

**Filter elements downstream/upstream micron size 35/65 is standard.
For 2507 Super Duplex option, replace -SS with -2507 (does not change filter screen material which is 316 SS)

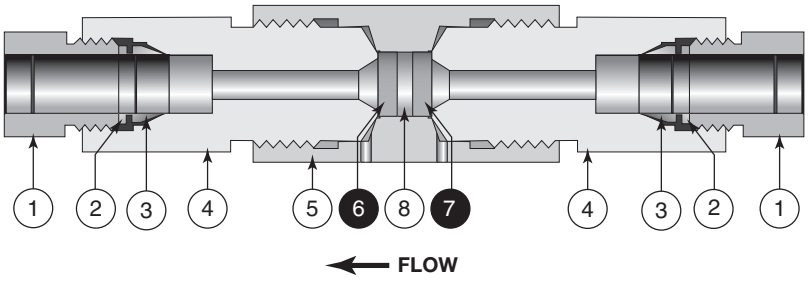

Item#	Part	Material
1	Nut	316 SS
2	Back Ferrule	316 SS
3	Front Ferrule	316 SS
4	Gland Nut	316 SS
5	Body	316 SS
❻	Dual Disc Line Filter 35 Microns*	316 L
❼	Dual Disc Line Filter 65 Microns*	316 L
8	Filter Gasket	316 SS

* Per Model Number
❶ Typical spare parts found in Repair Kit

Notes:

(1) All filters furnished complete with connection components unless otherwise specified. All dimensions for reference only and subject to change.

(2) Parker Autoclave Engineers disc filters are designed to filter small amounts of process particles. It is recommended that all fluids are thoroughly cleaned prior to entering the higher pressure system.

(3) 2507 Super Duplex filters may be supplied with four flats in place of standard hex.

(4) Pressure differential not to exceed 1,000 psi (69 bar) in a flowing condition.

(5) Larger micron size filter element is installed on the upstream (inlet) side.

Tel: +45 63 12 83 00 | Email: ps@hymatik.com | www.hymatik.com | Hvidkaervej 27a, DK-5250 Odense SV, Denmark

MAFC Series Cup Line Filter

Parker's MAFC Series high flow Cup Line Filters are recommended in high pressure systems requiring both high flow rates and maximum filter surface area. Widely used in the industrial and chemical processing fields, the cup design offers as much as six times the effective filter area as compared to disc-type units. In addition, the filter elements can be quickly and easily replaced.

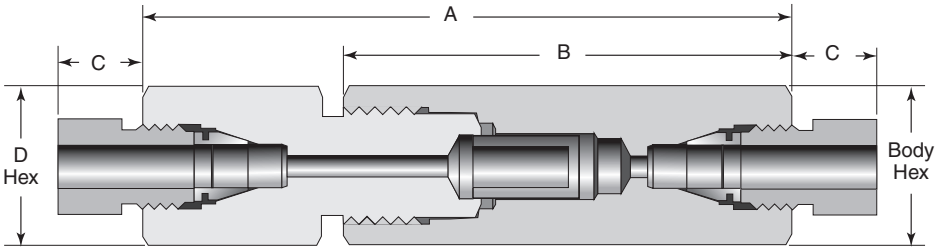

						Dimensions - inches (mm)				
Tubing	Parker Part No.**	Pressure psi (bar)	Orifice inch (mm)	Micron Size	Connection	A	B	C	D	Hex
1/4" O.D	4MP7-MAFCL-5-SS	15,000 (1034)	0.125 (3.18)	5	1/4" MPI	3.80 (96.52)	2.63 (66.80)	.50 (12.70)	0.81 (20.57)	0.81 (20.57)
	4MP7-MAFCL-35-SS			35						
	4MP7-MAFCL-65-SS			65						
3/8" O.D	6MP7-MAFCL-5-SS	15,000 (1034)	0.219 (5.56)	5	3/8" MPI	4.40 (111.76)	3.06 (77.72)	.63 (16.00)	0.94 (23.88)	1.00 (25.40)
	6MP7-MAFCL-35-SS			35						
	6MP7-MAFCL-65-SS			65						
1/2" O.D	8MP7-MAFCL-5-SS	15,000 (1034)	0.359 (9.12)	5	1/2" MPI	5.56 (141.48)	3.94 (100.08)	.69 (17.53)	1.19 (30.23)	1.38 (35.05)
	8MP7-MAFCL-35-SS			35						
	8MP7-MAFCL-65-SS			65						
9/16" O.D	9MP7-MAFCL-5-SS	15,000 (1034)	0.359 (9.12)	5	9/16" MPI	5.56 (141.48)	3.94 (100.08)	.75 (19.05)	1.19 (30.23)	1.38 (35.05)
	9MP7-MAFCL-35-SS			35						
	9MP7-MAFCL-65-SS			65						
3/4" O.D	12MP7-MAFCL-5-SS	15,000 (1034)	0.516 (13.11)	5	3/4" MPI	7.71 (195.83)	5.76 (146.30)	.88 (22.35)	1.88 (47.75)	Ø 2.12 (53.85)
	12MP7-MAFCL-35-SS			35						
	12MP7-MAFCL-65-SS			65						
1" O.D	16MP7-MAFCL-5-SS	12,500 (861.85)	0.688 (17.48)	5	1" MPI	8.71 (221.23)	6.25 (158.75)	1.13 (28.70)	1.88 (47.75)	Ø 2.12 (53.85)
	16MP7-MAFCL-35-SS			35						
	16MP7-MAFCL-65-SS			65						

**Other micron sizes are available on special order
For 2507 Super Duplex option, replace -SS with -2507 and add -XF for sizes 12 & 16 (increases MAWP to 15,000 psi), (does not change filter screen material which is 316 L)

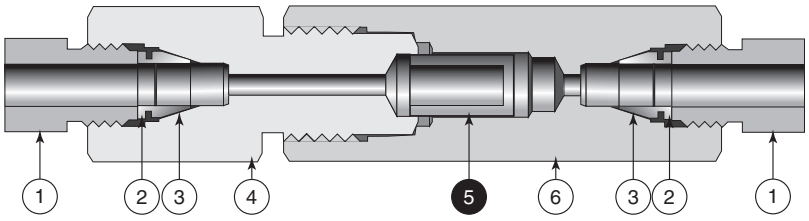

Material of Construction

Item#	Part	Material
1	Nut	316 SS
2	Back Ferrule	316 SS
3	Front Ferrule	316 SS
4	Gland Nut	316 SS
❺	Cup Filter	316 L
6	Body	316 SS
7	Spring (Not shown - only in 1" MPI)	302 SS

Notes:

(1) All filters furnished complete with connection components unless otherwise specified. All dimensions for reference only and subject to change.

(2) Parker Autoclave Engineers cup type filters are designed to filter small amounts of process particles. It is recommended that all fluids are thoroughly cleaned prior to entering the higher pressure system.

(3) 2507 Super Duplex filters may be supplied with four flats in place of standard hex.

(4) Pressure differential not to exceed 1,000 psi (69 bar) in a flowing condition.

❺ Typical spare parts found in Repair Kit

Tel: +45 63 12 83 00 | Email: ps@hymatik.com | www.hymatik.com | Hvidkaervej 27a, DK-5250 Odense SV, Denmark

MAC and MACB Check Valves

(Replaces MPC and MPCB Check Valves)

Parker's MACB series (Ball Check Valve) prevent reverse flow where leak-tight shut-off is not mandatory. When differential drops below cracking pressure, valve closes. With all-metal components, valve can be used up to 1000°F (538°C). Ball and poppet are an integral design to assure positive, in-line seating without "chatter". Poppet is designed essentially for axial flow with minimum pressure drop.

Parker's MAC series (O-Ring Check Valve) provides unidirectional flow and tight shut-off for liquids and gases with high reliability. When differential drops below cracking pressure*, valve shuts off. (Not for use as a Relief Valve)

*Cracking pressure: 20 psi (1.4 bar) +/-30%. For higher cracking pressures (up to 100 psi (6.7 bar) available with special order for O-ring style check valves only.

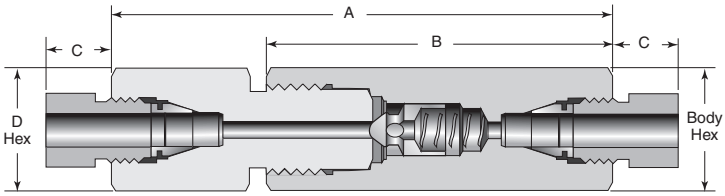

Tubing O.D.	Parker Ball Check Part No.	Parker O-Ring Check Part No.	Pressure psi (bar)	Connection	Orifice inch (mm)	Rated C_V	Dimensions - inches (mm) A	B	C	D	Hex	Repair Kits
1/4"	4MP7-MACBL-20-SS	4MP7-MACL-20-V-SS	15,000 (1034)	1/4" MPI	0.125 (3.18)	0.28	3.80 (96.52)	2.63 (66.80)	0.50 (12.70)	0.81 (20.57)	0.81 (20.57)	R4MAC R4MACB
3/8"	6MP7-MACBL-20-SS	6MP7-MACL-20-V-SS	15,000 (1034)	3/8" MPI	0.219 (5.56)	0.84	4.40 (111.76)	3.06 (77.72)	0.63 (16.00)	0.94 (23.88)	1.00 (25.40)	R6MAC R6MACB
1/2"	8MP7-MACBL-20-SS	8MP7-MACL-20-V-SS	15,000 (1034)	1/2" MPI	0.359 (9.12)	2.30	5.56 (141.22)	3.94 (100.08)	0.69 (17.53)	1.19 (30.23)	1.38 (35.05)	R8MAC R8MACB
9/16"	9MP7-MACBL-20-SS	9MP7-MACL-20-V-SS	15,000 (1034)	9/16" MPI	0.359 (9.12)	2.30	5.56 (141.22)	3.94 (100.08)	0.75 (19.05)	1.19 (30.23)	1.38 (35.05)	R9MAC R9MACB
3/4"	12MP7-MACBL-20-SS	12MP7-MACL-20-V-SS	15,000 (1034)	3/4" MPI	0.516 (13.11)	4.70	7.05 (179.07)	5.13 (130.30)	0.88 (22.35)	1.38 (35.05)	1.75 (44.45)	R12MAC R12MACB
1"	16MP7-MACBL-20-SS	16MP7-MACL-20-V-SS	12,500 (861.85)	1" MPI	0.688 (17.48)	7.40	8.71 (221.23)	6.25 (158.75)	1.13 (28.70)	1.88 (47.75)	Ø 2.12 (53.85)	R16MAC R16MACB

Minimum operating temperature for standard **BALL** check valves -110°F (-79°C). For low temperature option to -423°F (-252°C) add suffix-LT (Low temperature spring). Temperature range for standard Fluorocarbon Rubber O-RING check valves is 0°F to 400°F (-18°C to 204°C). For temperatures under 0°F to -423°F use PTFE o-ring (-TO). If under -110°F (-79°C) Low Temperature Spring must be used (-LT option). See *options below for additional o-ring material options.

For 2507 Super Duplex option, replace -SS with -2507 and add -XF for sizes 12 & 16 (increases MAWP to 15,000 psi.) For 2507 Repair kits, include -2507 as suffix.

Ball Check Valves

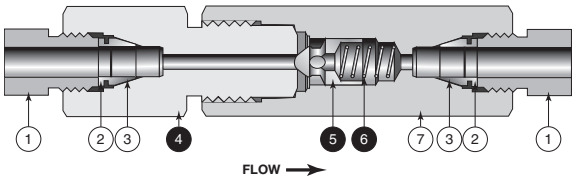

O-Ring Check Valves

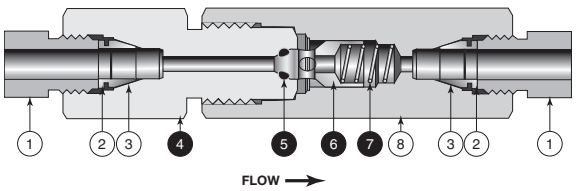

Material of Construction

Item#	Part	Material
1	Nut	316 SS
2	Back Ferrule	316 SS
3	Front Ferrule	316 SS
❹	Gland Nut	316 SS
❺	Poppet	316 SS
❻	Spring	302 SS
7	Body	316 SS

Item#	Part	Material
1	Nut	316 SS
2	Back Ferrule	316 SS
3	Front Ferrule	316 SS
❹	Gland Nut	316 SS
❺	O-Ring	Fluorocarbon Rubber*
❻	Poppet	316 SS
❼	Spring	302 SS
8	Body	316 SS
KZ*	FFKM Highly Fluorinated Fluorocarbon Rubber (o-ring optional material)	
BN*	Nitrile Rubber o-ring (-20° to 250°F)	
EPR*	Ethylene Propylene Rubber o-ring (-20° to 250°F)	
TO*	PTFE o-ring (-423° to 400°F)	

❶ Typical spare parts found in Repair Kit

Tel: +45 63 12 83 00 | Email: ps@hymatik.com | www.hymatik.com | Hvidkaervej 27a, DK-5250 Odense SV, Denmark

MARA Series Metal Seat Relief Valve (Factory Set)

(Replaces MPR Series Relief Valves)

Parker's MARA series (Metal Seat) relief valves provide reliable venting of gases or liquids for set pressures from 3,000 psi (206.8 bar) minimum to 15,000 psi (1034 bar). The standard temperature range for all models is -423ºF to 400ºF (-252ºC to 204ºC). A high temperature option to 750ºF (400ºC) is also available. These precision valves are designed for pressure gas systems, cryogenic systems, petrochemical applications and other special systems.

Capable of handling air, gases, steam, vapor and liquids, they are however, not recommended for steam boiler applications nor are they ASME code stampable. Relief valves are designed to open proportionally to increasing pressure. Therefore, they are not recommended for applications requiring immediate full valve flow at set pressure (such as decompositions, polymerizations, etc.). Full flow of relief valve is defined at 10% over set pressure. Relief valve accuracy = +/-3% of setpoint

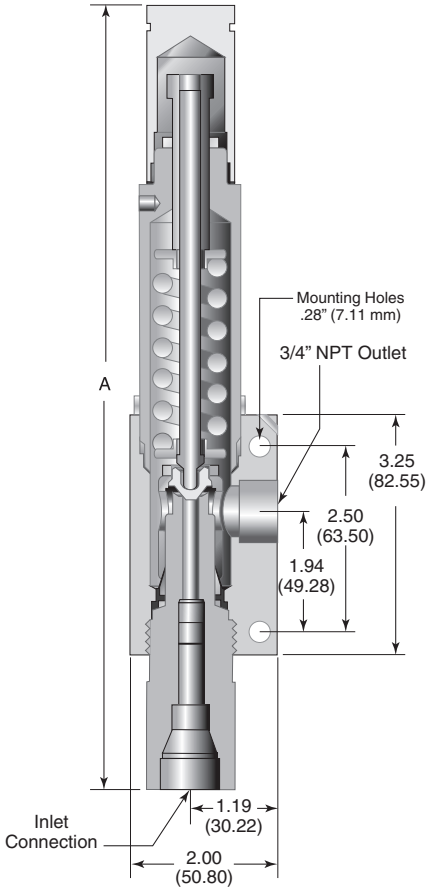

Hard Seat Part No.	Connection Size & Type		Orifice Diameter inches (mm)	Pressure Rating psi (bar) @ 100ºF (38ºC)			Dimension inches (mm)	Repair Kit
	Inlet Connection	Outlet Connection		Minimum Setting	Maximum Setting	Maximum Back Press.	A	
8MP712F-MARA-****-SS	1/2" MPI	3/4" FNPT	0.188 (4.78)	3,000 (206.84)	5,000 (345)	500 (34)	10.62 (270)	R8MARA-5K
				5,000 (344.74)	10,000 (689)			R8MARA-10K
				10,000 (689.46)	15,000 (1034)			R8MARA-15K
9MP712F-MARA-****-SS	9/16" MPI	3/4" FNPT	0.188 (4.78)	3,000 (206.84)	5,000 (345)	500 (34)	10.62 (270)	R9MARA-5K
				5,000 (344.74)	10,000 (689)			R9MARA-10K
				10,000 (689.46)	15,000 (1034)			R9MARA-15K

**** - Insert Set Pressure

For 2507 Super Duplex option, replace **-SS** with **-2507**. For 2507 Repair kits, include **-2507** as suffix.

Tel: +45 63 12 83 00 | Email: ps@hymatik.com | www.hymatik.com | Hvidkaervej 27a, DK-5250 Odense SV, Denmark

MARA Series Metal Seat Relief Valve (Factory Set)

(Replaces MPR Series Relief Valves)

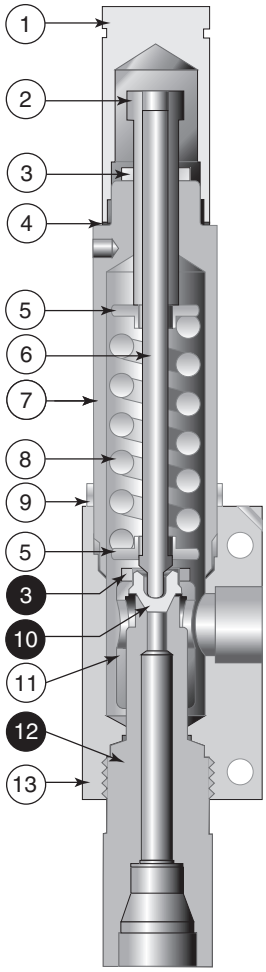

Material of Construction

Item#	Part	Material
1	Cap	316 SS
2	Adjusting Bolt	Nitronic 60
❸	Locknut	316 SS
4	Gasket	304 SS Annealed
5	Spring Washer	316 SS
6	Spindle	316 SS
7	Spring Cylinder	316 SS
8	Spring	316 SS
9	Locknut	316 SS
❿	Plug	316 SS
11	Plug Guide	Nitronic 60
⓬	Seat Gland	316 SS
13	Body	316 SS
14	Nameplate (Not Shown)	304 SS
15	Cable (Not Shown)	316 SS
16	Splicing Sleeve (Not Shown)	316 SS

❶ Typical spare parts found in Repair Kit

Caution:

1. Parker Relief Valves are preset and factory sealed. Warranty is voided if seal is broken by customer.
2. Maximum system operating pressure should not exceed 90% of relief valve set pressure. Pressures in excess of this value may cause weepage resulting in damage to plug and seat.
3. Care should be taken when locating a relief valve within a piping system to keep the relief valve as far from the pump as possible. Certain pumps create an end-of-stroke spike in pressure that is not detectable by common instrumentation. These spikes could cause premature failure of the relief valve.

Gas Flow Curves (SCFM of Nitrogen)

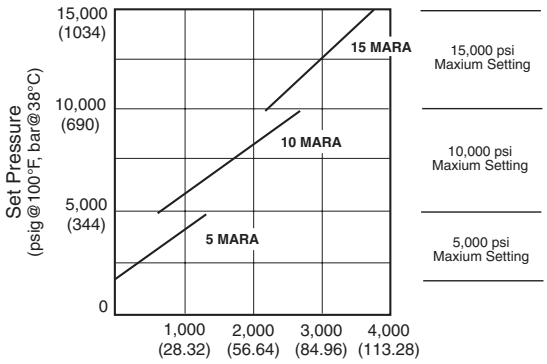

Liquid Flow Curves (Water)

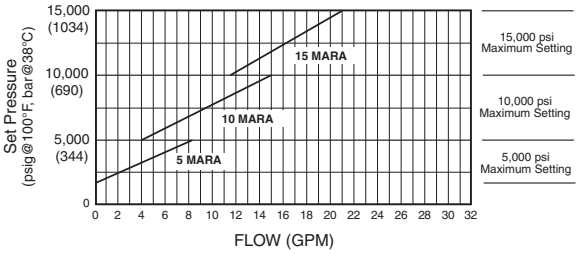

MARSA Soft Seat Relief Valve (Factory Set)

Parker's MARSA series (Soft Seat) relief valves utilize a soft seat design for reliable venting of gases at set pressures from 1,500 psi (103 bar) to 15,000 psi (1034 bar). The operating temperature range is -50ºF (-46ºC) to 400ºF (204ºF). The soft seat design provides bubble tight sealing, repeatable pop-off, and reseat. Additionally, soft seat valves provide a higher cycle life than metal seat relief valves.

These precision valves are designed for pressure gas systems, where zero leakage is critical. They are not recommended for liquid nitrogen or liquid carbon dioxide, which produce gas at cryogenic temperatures upon relief. Relief valves are designed to open proportionally to increasing pressure. Therefore, they are not recommended for applications requiring immediate full valve flow at set pressure (such as decompositions, polymerizations, etc.). Full flow of relief valve is defined at 10% over set pressure. Relief Valve Accuracy = +/-3% of Setpoint

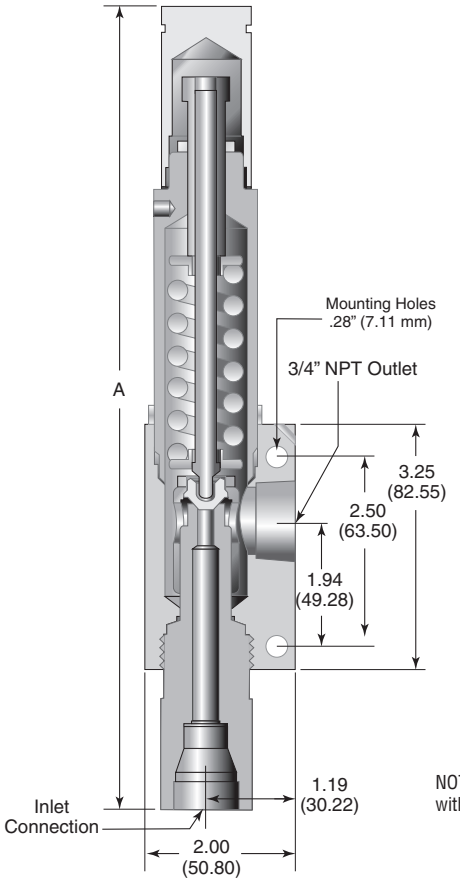

NOTE: The MARA (or MARSA) Relief valve is shown without included MPI Nut and Ferrules

Soft Seat Part No.	Connection Size & Type		Orifice Diameter inches (mm)	Pressure Rating psi (bar) @ 100ºF (38ºC)			Dimension inches (mm)	Repair Kit
	Inlet Connection	Outlet Connection		Minimum Setting	Maximum Setting	Maximum Back Press.	A	
8MP712F-MARSA-****-SS	1/2" MPI	3/4" FNPT	0.156 (3.96)	1,500 (103.42)	5,000 (345)	500 (34)	10.62 (270)	R8MARSA-5K
				5,000 (344.74)	10,000 (689)			R8MARSA-10K
				10,000 (689.46)	15,000 (1034)			R8MARSA-15K
9MP712F-MARSA-****-SS	9/16" MPI	3/4" FNPT	0.156 (3.96)	1,500 (103.42)	5,000 (345)	500 (34)	10.62 (270)	R9MARSA-5K
				5,000 (344.74)	10,000 (689)			R9MARSA-10K
				10,000 (689.46)	15,000 (1034)			R9MARSA-15K

**** - Insert Set Pressure

For 2507 Super Duplex option, replace **-SS** with **-2507**. For 2507 Repair kits, include **-2507** as suffix.

Tel: +45 63 12 83 00 | Email: ps@hymatik.com | www.hymatik.com | Hvidkaervej 27a, DK-5250 Odense SV, Denmark

MPI™ Medium Pressure Products

MARSA Soft Seat Relief Valve (Factory Set)

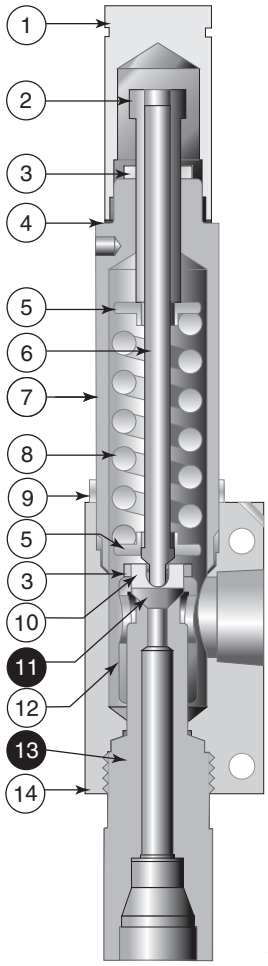

NOTE: The MARA (or MARSA) Relief valve is shown without included MPI Nut and Ferrules

Material of Construction

Item#	Part	Material
1	Cap	316 SS
2	Adjusting Bolt	Nitronic 60
3	Locknut	316 SS
4	Gasket	304 SS Annealed
5	Spring Washer	316 SS
6	Spindle	316 SS
7	Spring Cylinder	316 SS
8	Spring	316 SS
9	Locknut	316 SS
10	Plug Gland	316 SS
⓫	Soft Seat	Carbon-Filled Peek
12	Plug Guide	Nitronic 60
⓭	Seat Gland	316 SS
14	Body	316 SS
16	Nameplate (Not Shown)	304 SS
17	Cable (Not Shown)	316 SS
18	Splicing Sleeve (Not Shown)	316 SS

❶ Typical spare parts found in Repair Kit

Caution:

1. Parker Relief Valves are preset and factory sealed. Warranty is voided if seal is broken by customer.
2. Maximum system operating pressure should not exceed 90% of relief valve set pressure. Pressures in excess of this value may cause weepage resulting in damage to plug and seat.
3. Care should be taken when locating a relief valve within a piping system to keep the relief valve as far from the pump as possible. Certain pumps create an end-of-stroke spike in pressure that is not detectable by common instrumentation. These spikes could cause premature failure of the relief valve.

Gas Flow Curves (SCFM of Nitrogen)

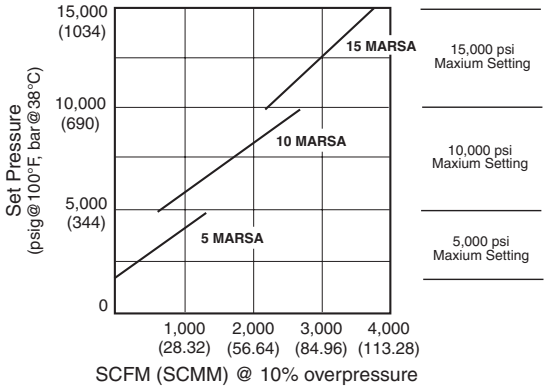

Liquid Flow Curves (Water)

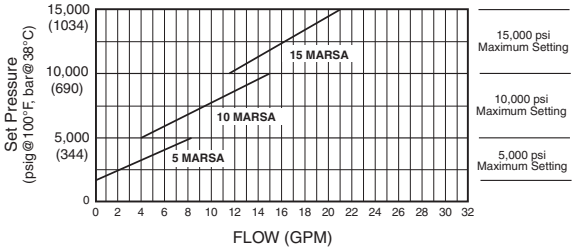

Technical Information

Tools and Installation Instruction

Please find following all instructions and tooling needed to install Parker MPI™ Fittings and Valves.

For your assistance, we have also included female port dimensions for the Parker X44 Adapter connection. This port configuration is rated for 15,000 psi when using material with at least 60,000 psi yield strength

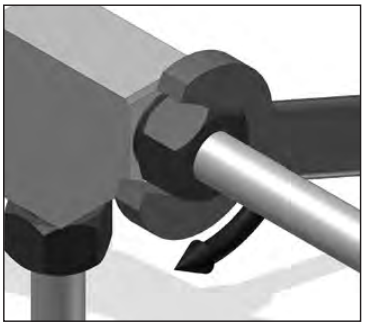

Overview:

- Assembly
- Gaugeability
- Remake
- Gap Gauge
- Hydraulic Preset Tools
- Port Dimensions



Gap Gauge

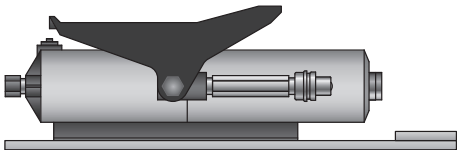

Parker Part No.
MPI AIR PUMP KIT

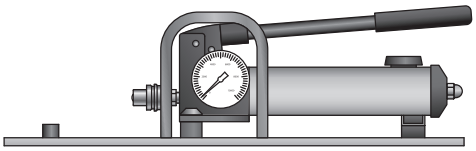

Parker Part No.
MPI HAND PUMP KIT

Tel: +45 63 12 83 00 | Email: ps@hymatik.com | www.hymatik.com | Hvidkaervej 27a, DK-5250 Odense SV, Denmark

MPI™ Medium Pressure Products

Parker MPI™ Fittings can be assembled by hand but hydraulic preset is recommended for 3/4" and required for 1" to insure proper markup (Required for 2507 Super Duplex Tubing along with using -XF ferrule sets on sizes 12 & 16).

Assembly

1. Parker MPI™ Fittings are sold completely assembled and ready for immediate use. Simply insert the tube as illustrated until it bottoms in the fitting body. (If the fitting is disassembled, note that the small tapered end of the ferrule(s) go into the fitting body.)

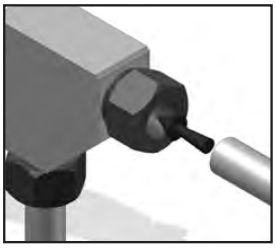

2. Turn the nut to the “finger-tight” position. Hold the fitting body with a second wrench to prevent the body from turning as you tighten the nut. For hand assembly, tighten the nut 1-1/2 turns. For 3/4" and 1" sizes, preset the nut and ferrules and then tighten the nut 1/2 turn only. See page 79 & 80 for more information on preset connections. Parker recommends that you mark the nut (using a scribe or ink) to help you count the turns.

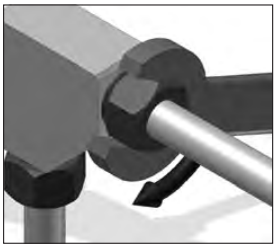

Gaugeability

Check the gap between the nut and the body hex with the end of the gauge by inserting the gauge (as shown) into the beveled gap between the nut and body hex. Gently turn the gauge (that is, it “twists out”). However, if the gauge slides into the beveled gap, (does not “twist out”) the fitting is not properly made up and you must check the entire assembly procedure.



Remake

For maximum number of remakes, mark the fitting and nut before disassembly. Before retightening, make sure the assembly has been inserted into the fitting until the ferrule seats in the fitting. Retighten the nut by hand. Rotate the nut with a wrench to the original position as indicated by the previous marks lining up. (A noticeable increase in mechanical resistance will be felt indicating the ferrule is being re-sprung into sealing position.)

Gap Gauge

This one handy gauge works for all MPI™ sizes. The end of the gauge checks the fitting gap after make-up.

Parker Part Number: **MPI GAP GAUGE**



Gap Gauge

MPI™ Hydraulic Preset Tools (316 Tubing)

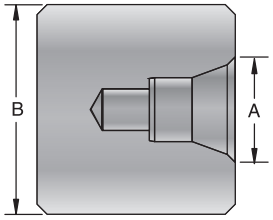

MPI™ Body Die

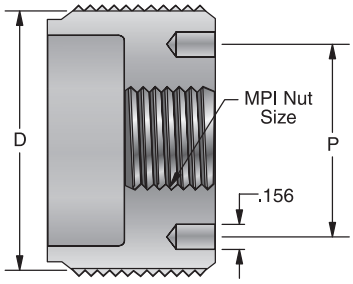

MPI™ Nut Die

316 Tubing

Body Dies and Nut Dies Used with the MPI™ Small Preset Assembly

MPI Small Preset Assembly		Inches					
Body Die Part No.	Nut Die Part No.	A	B	D	P	MPI™ Nut Size	Preset Pressure PSIG
4 MPI Body Die	4 MPI Nut Die	.50	1.25	1.62	1.20	4	3,200
6 MPI Body Die	6 MPI Nut Die	.63	1.25	1.62	1.20	6	4,000
8 MPI Body Die	8 MPI Nut Die	.82	1.25	1.62	1.20	8	6,800
9 MPI Body Die	9 MPI Nut Die	.88	.88	1.62	1.20	9	8,500

Dimensions in inches are for reference only, subject to change.

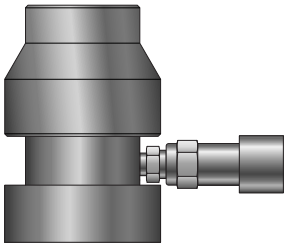

Parker Part No.
MPI SMALL Preset Assembly

Body Dies and Nut Dies Used with the MPI™ Large Preset Assembly

MPI Large Preset Assembly		Inches					Preset Pressure PSIG	-XF Preset Pressure (psi)
Body Die Part No.	Nut Die Part No.	A	B	D	P	MPI™ Nut Size		
*9 MPI Body Die	9 MPI Large Nut Die	.88	1.25	2.00	1.67	9	3,600	-
12 MPI Body Die	12 MPI Nut Die	1.13	1.75	2.00	1.67	12	5,200	6,000
16 MPI Body Die	16 MPI Nut Die	1.44	1.75	2.00	1.67	16	8,000	8,000

* Requires a 9 MPI Body Die Adapter
Dimensions in inches are for reference only, subject to change.

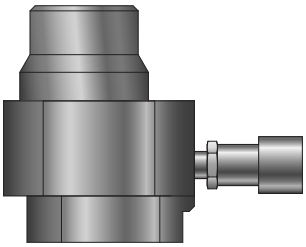

Parker Part No.
MPI LARGE Preset Assembly

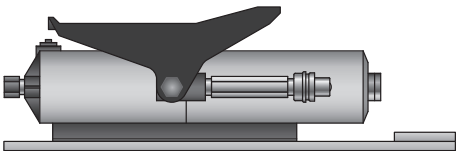

Parker Part No.
MPI AIR PUMP KIT

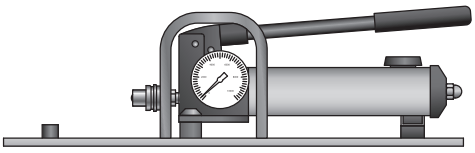

Parker Part No.
MPI HAND PUMP KIT

Note: One Pump Kit, Preset Assembly, Body Die and Nut Die are required for presetting. Pump Kits and Preset Assemblies can be interchanged but Body Dies and Nut Dies are for a specific Preset Assembly. Detailed operating instructions are included with each kit. Copies may also be obtained by contacting the Division.

Tel: +45 63 12 83 00 | Email: ps@hymatik.com | www.hymatik.com | Hvidkaervej 27a, DK-5250 Odense SV, Denmark

MPI™ Medium Pressure Products

MPI™ Hydraulic Preset Tools (2507 Tubing)

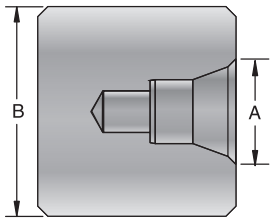

MPI™ Body Die

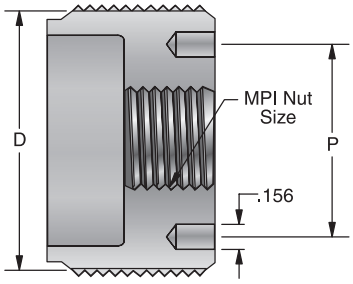

MPI™ Nut Die

2507 Tubing

Body Dies and Nut Dies Used with the MPI™ Small Preset Assembly

MPI Small Preset Assembly		Inches					
Body Die Part No.	Nut Die Part No.	A	B	D	P	MPI™ Nut Size	Preset Pressure PSIG
6 MPI Body Die	6 MPI Nut Die	.63	1.25	1.62	1.20	6	4,400
8 MPI Body Die	8 MPI Nut Die	.82	1.25	1.62	1.20	8	8,000

Dimensions in inches are for reference only, subject to change.

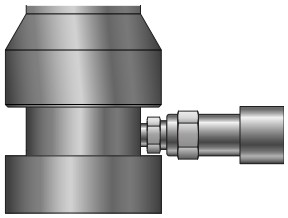

Parker Part No.
MPI SMALL Preset Assembly

Body Dies and Nut Dies Used with the MPI™ Large Preset Assembly

MPI Large Preset Assembly		Inches					Preset Pressure PSIG	-XF Preset Pressure (psi)
Body Die Part No.	Nut Die Part No.	A	B	D	P	MPI™ Nut Size		
10 MPI Body Die	10 MPI Large Nut Die						4,400	-
12 MPI Body Die*	12 MPI Nut Die	1.13	1.75	2.00	1.67	12	5,600	6,000
16 MPI Body Die	16 MPI Nut Die	1.44	1.75	2.00	1.67	16	8,800	8,000

* Requires a 9 MPI Body Die Adapter
Dimensions in inches are for reference only, subject to change.

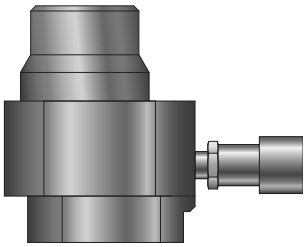

Parker Part No.
MPI LARGE Preset Assembly

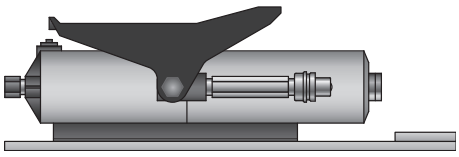

Parker Part No.
MPI AIR PUMP KIT

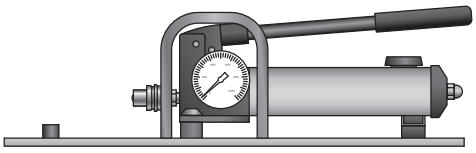

Parker Part No.
MPI HAND PUMP KIT

Note: One Pump Kit, Preset Assembly, Body Die and Nut Die are required for presetting. Pump Kits and Preset Assemblies can be interchanged but Body Dies and Nut Dies are for a specific Preset Assembly. Detailed operating instructions are included with each kit. Copies may also be obtained by contacting the Division.

Tel: +45 63 12 83 00 | Email: ps@hymatik.com | www.hymatik.com | Hvidkaervej 27a, DK-5250 Odense SV, Denmark

Port Dimensions for Parker X44™ Adapter

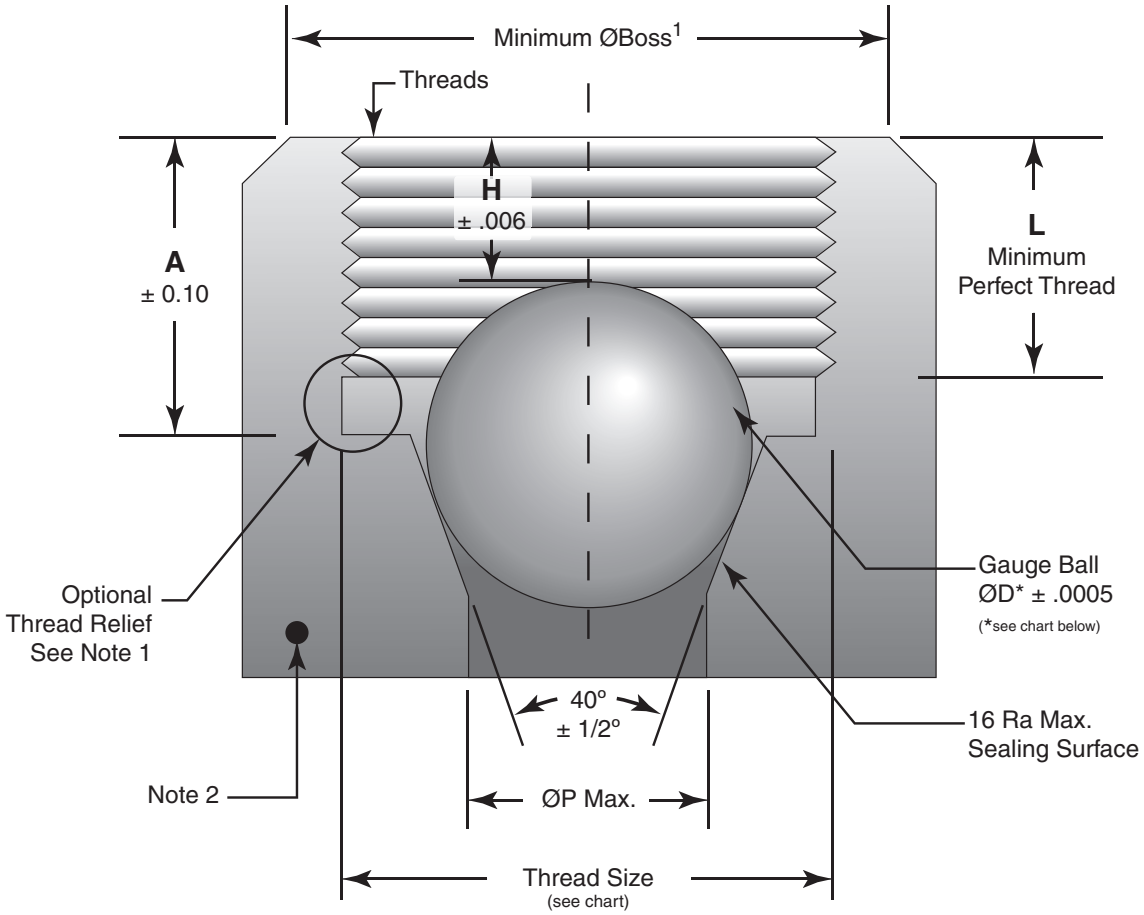

Port Dimensions for Parker X44™ Adapter									
Size	Threads	A	ØD*	H	L	ØP Max.	Min. ØBoss	Maximum Working Pressure PSI	Assembly Torque
6	5/8-18 UNF-2B	.516	.3750	.386	.409	.291	3/4	15,000	40 ft-lb
9	7/8-14 UNF-2B	.547	.6250	.222	.435	.385	1-1/16	15,000	80 ft-lb
12	1-1/8-12 UNF-2B	.680	.7500	.324	.549	.541	1-3/8	15,000	165 ft-lb

Note:

1. If produced with the optional thread relief, the minimum boss diameter shall be increased by 1/16”
2. 60,000 psi minimum yield strength required for port material.
3. ØP is the maximum thru hole. Drill size should be .010" smaller than diameter shown.
4. All dimensions are in inches unless otherwise specified.

Tel: +45 63 12 83 00 | Email: ps@hymatik.com | www.hymatik.com | Hvidkaervej 27a, DK-5250 Odense SV, Denmark

MPI™ Medium Pressure Products

Part Number Crossover Charts

The valves in this catalog differ from valves sold before July 2015 and while the new valves meet or exceed the prior valve design capabilities, the dimensions are different and as such, new part numbering was needed.

The charts following will indicate where in this catalog or in what additional brochure the replacement information can be found.

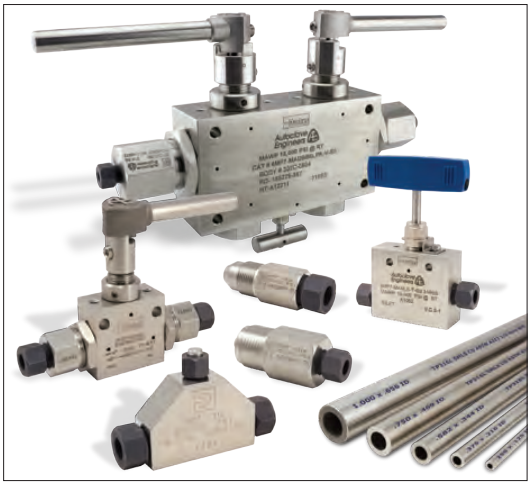

Tel: +45 63 12 83 00 | Email: ps@hymatik.com | www.hymatik.com | Hvidkaervej 27a, DK-5250 Odense SV, Denmark

Part Number Crossover Reference Chart

MPI Part Numbers Sold Prior to July 2015 (includes Catalog 4234)	New Part Number	Additional Catalog Needed
2F-MAB3XPK-BN-SSP	3B3S15P2-BO	PAE Ball Valve
2F-MAB3XPKD-BN-SSP	3BD3S15P2-BO	PAE Ball Valve
2F-MAB3XPKD-EPR-SSP	3BD3S15P2-EPR	PAE Ball Valve
2F-MAB3XPKD-KZ-SSP	3BD3S15P2-HT	PAE Ball Valve
2F-MAB3XPKD-V-SSP	3BD3S15P2	PAE Ball Valve
2F-MAB3XPK-EPR-SSP	3B3S15P2-EPR	PAE Ball Valve
2F-MAB3XPK-KZ-SSP	3B3S15P2-HT	PAE Ball Valve
2F-MAB3XPK-V-SSP	3B3S15P2	PAE Ball Valve
2F-MAB4LPK-BN-SSP	2B4S15P2-BO	PAE Ball Valve
2F-MAB4LPK-EPR-SSP	2B4S15P2-EPR	PAE Ball Valve
2F-MAB4LPK-KZ-SSP	2B4S15P2-HT	PAE Ball Valve
2F-MAB4LPK-V-SSP	2B4S15P2	PAE Ball Valve
2F-MANAB-T-SS	15P2002	PAE P Series Needle Valve
2F-MANLB-T-SS	15P2001	PAE P Series Needle Valve
2F-MANLR-T-SS	15P2011	PAE P Series Needle Valve
2F-MPBLPK-BN-SSP	2B4S15P2-BO	PAE Ball Valve
2F-MPBLPK-EPR-SSP	2B4S15P2-EPR	PAE Ball Valve
2F-MPBLPK-KZ-SSP	2B4S15P2-HT	PAE Ball Valve
2F-MPBLPK-V-SSP	2B4S15P2	PAE Ball Valve
2F-MPBXPK-BN-SSP	3B3S15P2-BO	PAE Ball Valve
2F-MPBXPKD-BN-SSP	3BD3S15P2-BO	PAE Ball Valve
2F-MPBXPKD-EPR-SSP	3BD3S15P2-EPR	PAE Ball Valve
2F-MPBXPKD-KZ-SSP	3BD3S15P2-HT	PAE Ball Valve
2F-MPBXPKD-V-SSP	3BD3S15P2	PAE Ball Valve
2F-MPBXPK-EPR-SSP	3B3S15P2-EPR	PAE Ball Valve
2F-MPBXPK-KZ-SSP	3B3S15P2-HT	PAE Ball Valve
2F-MPBXPK-V-SSP	3B3S15P2	PAE Ball Valve
2F-MPNAB-T-SS	15P2002	PAE P Series Needle Valve
2F-MPNAR-T-SS	15P2012	PAE P Series Needle Valve
2F-MPNLB-T-SS	15P2001	PAE P Series Needle Valve
2F-MPNLR-T-SS	15P2011	PAE P Series Needle Valve
4F8F-MARA-10000-SS	10PRVP4072	PAE P Series Relief Valve
4F8F-MARA-15000-SS	15PRVP4072	PAE P Series Relief Valve
4F8F-MPRA-10000-SS	10PRVP4072	PAE P Series Relief Valve
4F8F-MPRA-15000-SS	15PRVP4072	PAE P Series Relief Valve
4F-MAB3XPK-BN-SSP	3B3S15P4-BO	PAE Ball Valve NPT Conn.
4F-MAB3XPKD-BN-SSP	3BD3S15P4-BO	PAE Ball Valve NPT Conn.
4F-MAB3XPKD-EPR-SSP	3BD3S15P4-EPR	PAE Ball Valve NPT Conn.
4F-MAB3XPKD-KZ-SSP	3BD3S15P4-HT	PAE Ball Valve NPT Conn.
4F-MAB3XPKD-V-SSP	3BD3S15P4	PAE Ball Valve NPT Conn.
4F-MAB3XPK-EPR-SSP	3B3S15P4-EPR	PAE Ball Valve NPT Conn.
4F-MAB3XPK-KZ-SSP	3B3S15P4-HT	PAE Ball Valve NPT Conn.
4F-MAB3XPK-V-SSP	3B3S15P4	PAE Ball Valve NPT Conn.
4F-MAB4LPK-BN-SSP	2B4S15P4-BO	PAE Ball Valve NPT Conn.
4F-MAB4LPK-EPR-SSP	2B4S15P4-EPR	PAE Ball Valve NPT Conn.
4F-MAB4LPK-KZ-SSP	2B4S15P4-HT	PAE Ball Valve NPT Conn.
4F-MAB4LPK-V-SSP	2B4S15P4	PAE Ball Valve NPT Conn.
4F-MAB6LPK-BN-SSP	2B6S15P4-BO	PAE Ball Valve NPT Conn.
4F-MAB6LPK-EPR-SSP	2B6S15P4-EPR	PAE Ball Valve NPT Conn.
4F-MAB6LPK-KZ-SSP	2B6S15P4-HT	PAE Ball Valve NPT Conn.
4F-MAB6LPK-V-SSP	2B6S15P4	PAE Ball Valve NPT Conn.
4F-MAB6XPK-BN-SSP	3B6S15P4-BO	PAE Ball Valve NPT Conn.
4F-MAB6XPKD-BN-SSP	3BD6S15P4-BO	PAE Ball Valve NPT Conn.
4F-MAB6XPKD-EPR-SSP	3BD6S15P4-EPR	PAE Ball Valve NPT Conn.
4F-MAB6XPKD-KZ-SSP	3BD6S15P4-HT	PAE Ball Valve NPT Conn.
4F-MAB6XPKD-V-SSP	3BD6S15P4	PAE Ball Valve NPT Conn.
4F-MAB6XPK-EPR-SSP	3B6S15P4-EPR	PAE Ball Valve NPT Conn.
4F-MAB6XPK-KZ-SSP	3B6S15P4-HT	PAE Ball Valve NPT Conn.
4F-MAB6XPK-V-SSP	3B6S15P4	PAE Ball Valve NPT Conn.
4F-MACBL-20-SS	CPB4400	PAE P Series Fitting/Tubing
4F-MACL-20-V-SS	CPO4400	PAE P Series Fitting/Tubing
4F-MADBB6LPK-BN-SS	6DB15P4P4-BO	PAE Ball Valve NPT Conn.
4F-MADBB6LPK-EPR-SS	6DB15P4P4-EPR	PAE Ball Valve NPT Conn.
4F-MADBB6LPK-KZ-SS	6DB15P4P4-HT	PAE Ball Valve NPT Conn.
4F-MADBB6LPK-V-SS	6DB15P4P4	PAE Ball Valve NPT Conn.
4F-MANAB-T-SS	15P4072	PAE P Series Needle Valve
4F-MANAB-T-SS-LTB	15P4072-B	PAE P Series Needle Valve
4F-MANAR-T-SS	15P4082	PAE P Series Needle Valve
4F-MANAR-T-SS-LTB	15P4082-B	PAE P Series Needle Valve
4F-MANLB-T-SS	15P4071	PAE P Series Needle Valve

MPI Part Numbers Sold Prior to July 2015 (includes Catalog 4234)	New Part Number	Additional Catalog Needed
4F-MANLB-T-SS-LTB	15P4071-B	PAE P Series Needle Valve
4F-MANLR-T-SS	15P4081	PAE P Series Needle Valve
4F-MANLR-T-SS-LTB	15P4081-B	PAE P Series Needle Valve
4F-MANXBD-T-SS	15P4075	PAE P Series Needle Valve
4F-MANXBD-T-SS-LTB	15P4075-B	PAE P Series Needle Valve
4F-MANXBI-T-SS	15P4073	PAE P Series Needle Valve
4F-MANXBI-T-SS-LTB	15P4073-B	PAE P Series Needle Valve
4F-MANXBO-T-SS	15P4074	PAE P Series Needle Valve
4F-MANXBO-T-SS-LTB	15P4074-B	PAE P Series Needle Valve
4F-MANXRD-T-SS	15P4085	PAE P Series Needle Valve
4F-MANXRD-T-SS-LTB	15P4085-B	PAE P Series Needle Valve
4F-MANXRI-T-SS	15P4083	PAE P Series Needle Valve
4F-MANXRI-T-SS-LTB	15P4083-B	PAE P Series Needle Valve
4F-MANXRO-T-SS	15P4084	PAE P Series Needle Valve
4F-MANXRO-T-SS-LTB	15P4084-B	PAE P Series Needle Valve
4F-MPBLPK-BN-SSP	2B4S15P4-BO	PAE Ball Valve NPT Conn.
4F-MPBLPK-EPR-SSP	2B4S15P4-EPR	PAE Ball Valve NPT Conn.
4F-MPBLPKH-BN-SSP	2B6S15P4-BO	PAE Ball Valve NPT Conn.
4F-MPBLPKH-EPR-SSP	2B6S15P4-EPR	PAE Ball Valve NPT Conn.
4F-MPBLPKH-KZ-SSP	2B6S15P4-HT	PAE Ball Valve NPT Conn.
4F-MPBLPKH-V-SSP	2B6S15P4	PAE Ball Valve NPT Conn.
4F-MPBLPK-KZ-SSP	2B4S15P4-HT	PAE Ball Valve NPT Conn.
4F-MPBLPK-V-SSP	2B4S15P4	PAE Ball Valve NPT Conn.
4F-MPBXPK-BN-SSP	3B3S15P4-BO	PAE Ball Valve NPT Conn.
4F-MPBXPKD-BN-SSP	3BD3S15P4-BO	PAE Ball Valve NPT Conn.
4F-MPBXPKD-EPR-SSP	3BD3S15P4-EPR	PAE Ball Valve NPT Conn.
4F-MPBXPKDH-BN-SSP	3BD6S15P4-BO	PAE Ball Valve NPT Conn.
4F-MPBXPKDH-EPR-SSP	3BD6S15P4-EPR	PAE Ball Valve NPT Conn.
4F-MPBXPKDH-KZ-SSP	3BD6S15P4-HT	PAE Ball Valve NPT Conn.
4F-MPBXPKDH-V-SSP	3BD6S15P4	PAE Ball Valve NPT Conn.
4F-MPBXPKD-KZ-SSP	3BD3S15P4-HT	PAE Ball Valve NPT Conn.
4F-MPBXPKD-V-SSP	3BD3S15P4	PAE Ball Valve NPT Conn.
4F-MPBXPK-EPR-SSP	3B3S15P4-EPR	PAE Ball Valve NPT Conn.
4F-MPBXPKH-BN-SSP	3B6S15P4-BO	PAE Ball Valve NPT Conn.
4F-MPBXPKH-EPR-SSP	3B6S15P4-EPR	PAE Ball Valve NPT Conn.
4F-MPBXPKH-KZ-SSP	3B6S15P4-HT	PAE Ball Valve NPT Conn.
4F-MPBXPKH-V-SSP	3B6S15P4	PAE Ball Valve NPT Conn.
4F-MPBXPK-KZ-SSP	3B3S15P4-HT	PAE Ball Valve NPT Conn.
4F-MPBXPK-V-SSP	3B3S15P4	PAE Ball Valve NPT Conn.
4F-MPCBL-5-SS	CPB4400	PAE P Series Fitting/Tubing
4F-MPCL-5-V-SS	CPO4400	PAE P Series Fitting/Tubing
4F-MPNAB-T-SS	15P4072	PAE P Series Needle Valve
4F-MPNAB-T-SS-LTB	15P4072-B	PAE P Series Needle Valve
4F-MPNAR-T-SS	15P4082	PAE P Series Needle Valve
4F-MPNAR-T-SS-LTB	15P4082-B	PAE P Series Needle Valve
4F-MPNLB-T-SS	15P4071	PAE P Series Needle Valve
4F-MPNLB-T-SS-LTB	15P4071-B	PAE P Series Needle Valve
4F-MPNLR-T-SS	15P4081	PAE P Series Needle Valve
4F-MPNLR-T-SS-LTB	15P4081-B	PAE P Series Needle Valve
4F-MPNXBD-T-SS	15P4075	PAE P Series Needle Valve
4F-MPNXBD-T-SS-LTB	15P4075-B	PAE P Series Needle Valve
4F-MPNXBI-T-SS	15P4073	PAE P Series Needle Valve
4F-MPNXBI-T-SS-LTB	15P4073-B	PAE P Series Needle Valve
4F-MPNXBO-T-SS	15P4074	PAE P Series Needle Valve
4F-MPNXBO-T-SS-LTB	15P4074-B	PAE P Series Needle Valve
4F-MPNXRD-T-SS	15P4085	PAE P Series Needle Valve
4F-MPNXRD-T-SS-LTB	15P4085-B	PAE P Series Needle Valve
4F-MPNXRI-T-SS	15P4083	PAE P Series Needle Valve
4F-MPNXRI-T-SS-LTB	15P4083-B	PAE P Series Needle Valve
4F-MPNXRO-T-SS	15P4084	PAE P Series Needle Valve
4F-MPNXRO-T-SS-LTB	15P4084-B	PAE P Series Needle Valve
4MP7-MANLB-G-SS-HT	4MP7-MANLB-GY-SS-HT	Pages 35-47
4MP7-MPBLPK-BN-SSP	4MP7-MAB4LPK-BN-SSP	Pages 52-69
4MP7-MPBLPK-BN-SSP-LD	4MP7-MAB4LPK-BN-SSP-LD	Pages 52-69
4MP7-MPBLPK-EPR-SSP	4MP7-MAB4LPK-EPR-SSP	Pages 52-69
4MP7-MPBLPK-EPR-SSP-LD	4MP7-MAB4LPK-EPR-SSP-LD	Pages 52-69
4MP7-MPBLPK-KZ-SSP	4MP7-MAB4LPK-KZ-SSP	Pages 52-69
4MP7-MPBLPK-KZ-SSP-LD	4MP7-MAB4LPK-KZ-SSP-LD	Pages 52-69
4MP7-MPBLPK-V-SSP	4MP7-MAB4LPK-V-SSP	Pages 52-69
4MP7-MPBLPK-V-SSP-LD	4MP7-MAB4LPK-V-SSP-LD	Pages 52-69

Tel: +45 63 12 83 00 | Email: ps@hymatik.com | www.hymatik.com | Hvidkaervej 27a, DK-5250 Odense SV, Denmark

Parker MPI™ Medium Pressure Products

MPI Part Numbers Sold Prior to July 2015 (includes Catalog 4234)	New Part Number	Additional Catalog Needed
4MP7-MPBXPK-BN-SSP	4MP7-MAB3XPK-BN-SSP	Pages 52-69
4MP7-MPBXPKD-BN-SSP	4MP7-MAB3XPKD-BN-SSP	Pages 52-69
4MP7-MPBXPKD-EPR-SSP	4MP7-MAB3XPKD-EPR-SSP	Pages 52-69
4MP7-MPBXPKD-KZ-SSP	4MP7-MAB3XPKD-KZ-SSP	Pages 52-69
4MP7-MPBXPKD-V-SSP	4MP7-MAB3XPKD-V-SSP	Pages 52-69
4MP7-MPBXPK-EPR-SSP	4MP7-MAB3XPK-EPR-SSP	Pages 52-69
4MP7-MPBXPK-KZ-SSP	4MP7-MAB3XPK-KZ-SSP	Pages 52-69
4MP7-MPBXPK-V-SSP	4MP7-MAB3XPK-V-SSP	Pages 52-69
4MP7-MPCBL-5-SS	See 4MP7-MACBL-20-SS	Pages 72
4MP7-MPCL-5-KZ-SS	See 4MP7-MACL-20-KZ-SS	Pages 72
4MP7-MPCL-5-V-SS	See 4MP7-MACL-20-V-SS	Pages 72
4MP7-MPFL-0.5-SS	4MP7-MAFL-0.5-SS	Pages 70-71
4MP7-MPFL-100-SS	4MP7-MAFCL-100-SS	Pages 70-71
4MP7-MPFL-10-SS	4MP7-MAFCL-10-SS	Pages 70-71
4MP7-MPFL-2-SS	4MP7-MAFCL-2-SS	Pages 70-71
4MP7-MPFL-35-SS	4MP7-MAFCL-35-SS	Pages 70-71
4MP7-MPFL-5-SS	4MP7-MAFCL-5-SS	Pages 70-71
4MP7-MPFL-65-SS	4MP7-MAFCL-65-SS	Pages 70-71
4MP7-MPNAB-G-SS-HT	4MP7-MANAB-GY-SS-HT	Pages 35-47
4MP7-MPNABR-G-SS-HT	4MP7-MANABR-GY-SS-HT	Pages 35-47
4MP7-MPNABR-T-SS	4MP7-MANABR-T-SS	Pages 35-47
4MP7-MPNAB-T-SS	4MP7-MANAB-T-SS	Pages 35-47
4MP7-MPNAR-G-SS-HT	4MP7-MANAR-GY-SS-HT	Pages 35-47
4MP7-MPNARR-G-SS-HT	4MP7-MANARR-GY-SS-HT	Pages 35-47
4MP7-MPNARR-T-SS	4MP7-MANARR-T-SS	Pages 35-47
4MP7-MPNAR-T-SS	4MP7-MANAR-T-SS	Pages 35-47
4MP7-MPNLB-G-SS-HT	4MP7-MANLB-GY-SS-HT	Pages 35-47
4MP7-MPNLB-T-SS	4MP7-MANLB-T-SS	Pages 35-47
4MP7-MPNLB-T-SS-HYD	4MP7-MANLB-T-SS	Pages 35-47
4MP7-MPNLR-G-SS-HT	4MP7-MANLR-GY-SS-HT	Pages 35-47
4MP7-MPNLR-T-SS	4MP7-MANLR-T-SS	Pages 35-47
4MP7-MPNXBD-G-SS-HT	4MP7-MANXBD-GY-SS-HT	Pages 35-47
4MP7-MPNXBD-T-SS	4MP7-MANXBD-T-SS	Pages 35-47
4MP7-MPNXBI-G-SS-HT	4MP7-MANXBI-GY-SS-HT	Pages 35-47
4MP7-MPNXBI-T-SS	4MP7-MANXBI-T-SS	Pages 35-47
4MP7-MPNXBO-G-SS-HT	4MP7-MANXBO-GY-SS-HT	Pages 35-47
4MP7-MPNXBO-T-SS	4MP7-MANXBO-T-SS	Pages 35-47
4MP7-MPNXRD-G-SS-HT	4MP7-MANXRD-GY-SS-HT	Pages 35-47
4MP7-MPNXRD-T-SS	4MP7-MANXRD-T-SS	Pages 35-47
4MP7-MPNXRI-G-SS-HT	4MP7-MANXRI-GY-SS-HT	Pages 35-47
4MP7-MPNXRI-T-SS	4MP7-MANXRI-T-SS	Pages 35-47
4MP7-MPNXRO-G-SS-HT	4MP7-MANXRO-GY-SS-HT	Pages 35-47
4MP7-MPNXRO-T-SS	4MP7-MANXRO-T-SS	Pages 35-47
6F-MAB3XPK-BN-SSP	3B3S15P6-BO	PAE Ball Valve NPT Conn.
6F-MAB3XPKD-BN-SSP	3BD3S15P6-BO	PAE Ball Valve NPT Conn.
6F-MAB3XPKD-EPR-SSP	3BD3S15P6-EPR	PAE Ball Valve NPT Conn.
6F-MAB3XPKD-KZ-SSP	3BD3S15P6-HT	PAE Ball Valve NPT Conn.
6F-MAB3XPKD-V-SSP	3BD3S15P6	PAE Ball Valve NPT Conn.
6F-MAB3XPK-EPR-SSP	3B3S15P6-EPR	PAE Ball Valve NPT Conn.
6F-MAB3XPK-KZ-SSP	3B3S15P6-HT	PAE Ball Valve NPT Conn.
6F-MAB3XPK-V-SSP	3B3S15P6	PAE Ball Valve NPT Conn.
6F-MAB4LPK-BN-SSP	2B4S15P6-BO	PAE Ball Valve NPT Conn.
6F-MAB4LPK-EPR-SSP	2B4S15P6-EPR	PAE Ball Valve NPT Conn.
6F-MAB4LPK-KZ-SSP	2B4S15P6-HT	PAE Ball Valve NPT Conn.
6F-MAB4LPK-V-SSP	2B4S15P6	PAE Ball Valve NPT Conn.
6F-MAB6LPK-BN-SSP	2B6S15P6-BO	PAE Ball Valve NPT Conn.
6F-MAB6LPK-EPR-SSP	2B6S15P6-EPR	PAE Ball Valve NPT Conn.
6F-MAB6LPK-KZ-SSP	2B6S15P6-HT	PAE Ball Valve NPT Conn.
6F-MAB6LPK-V-SSP	2B6S15P6	PAE Ball Valve NPT Conn.
6F-MAB6XPK-BN-SSP	3B6S15P6-BO	PAE Ball Valve NPT Conn.
6F-MAB6XPKD-BN-SSP	3BD6S15P6-BO	PAE Ball Valve NPT Conn.
6F-MAB6XPKD-EPR-SSP	3BD6S15P6-EPR	PAE Ball Valve NPT Conn.
6F-MAB6XPKD-KZ-SSP	3BD6S15P6-HT	PAE Ball Valve NPT Conn.
6F-MAB6XPKD-V-SSP	3BD6S15P6	PAE Ball Valve NPT Conn.
6F-MAB6XPK-EPR-SSP	3B6S15P6-EPR	PAE Ball Valve NPT Conn.
6F-MAB6XPK-KZ-SSP	3B6S15P6-HT	PAE Ball Valve NPT Conn.
6F-MAB6XPK-V-SSP	3B6S15P6	PAE Ball Valve NPT Conn.
6F-MACBL-20-SS	CPB6600	PAE P Series Fitting/Tubing
6F-MACL-20-V-SS	CPO6600	PAE P Series Fitting/Tubing
6F-MADBB6LPK-BN-SS	6DB15P6P4-BO	PAE Ball Valve NPT Conn.
6F-MADBB6LPK-EPR-SS	6DB15P6P4-EPR	PAE Ball Valve NPT Conn.
6F-MADBB6LPK-KZ-SS	6DB15P6P4-HT	PAE Ball Valve NPT Conn.
6F-MADBB6LPK-V-SS	6DB15P6P4	PAE Ball Valve NPT Conn.
6F-MANAB-T-SS	15P6072	PAE P Series Needle Valve
6F-MANAR-T-SS	15P6082	PAE P Series Needle Valve

MPI Part Numbers Sold Prior to July 2015 (includes Catalog 4234)	New Part Number	Additional Catalog Needed
6F-MANLB-T-SS	15P6071	PAE P Series Needle Valve
6F-MANLR-T-SS	15P6081	PAE P Series Needle Valve
6F-MANXBD-T-SS	15P6075	PAE P Series Needle Valve
6F-MANXBI-T-SS	15P6073	PAE P Series Needle Valve
6F-MANXBO-T-SS	15P6074	PAE P Series Needle Valve
6F-MANXRD-T-SS	15P6085	PAE P Series Needle Valve
6F-MANXRI-T-SS	15P6083	PAE P Series Needle Valve
6F-MANXRO-T-SS	15P6084	PAE P Series Needle Valve
6F-MPBLPK-BN-SSP	2B4S15P6-BO	PAE Ball Valve NPT Conn.
6F-MPBLPK-EPR-SSP	2B4S15P6-EPR	PAE Ball Valve NPT Conn.
6F-MPBLPKH-BN-SSP	2B6S15P6-BO	PAE Ball Valve NPT Conn.
6F-MPBLPKH-EPR-SSP	2B6S15P6-EPR	PAE Ball Valve NPT Conn.
6F-MPBLPKH-KZ-SSP	2B6S15P6-HT	PAE Ball Valve NPT Conn.
6F-MPBLPKH-V-SSP	2B6S15P6	PAE Ball Valve NPT Conn.
6F-MPBLPK-KZ-SSP	2B4S15P6-HT	PAE Ball Valve NPT Conn.
6F-MPBLPK-V-SSP	2B4S15P6	PAE Ball Valve NPT Conn.
6F-MPBXPK-BN-SSP	3B3S15P6-BO	PAE Ball Valve NPT Conn.
6F-MPBXPKD-BN-SSP	3BD3S15P6-BO	PAE Ball Valve NPT Conn.
6F-MPBXPKD-EPR-SSP	3BD3S15P6-EPR	PAE Ball Valve NPT Conn.
6F-MPBXPKDH-BN-SSP	3BD6S15P6-BO	PAE Ball Valve NPT Conn.
6F-MPBXPKDH-EPR-SSP	3BD6S15P6-EPR	PAE Ball Valve NPT Conn.
6F-MPBXPKDH-KZ-SSP	3BD6S15P6-HT	PAE Ball Valve NPT Conn.
6F-MPBXPKDH-V-SSP	3BD6S15P6	PAE Ball Valve NPT Conn.
6F-MPBXPKD-KZ-SSP	3BD3S15P6-HT	PAE Ball Valve NPT Conn.
6F-MPBXPKD-V-SSP	3BD3S15P6	PAE Ball Valve NPT Conn.
6F-MPBXPK-EPR-SSP	3B3S15P6-EPR	PAE Ball Valve NPT Conn.
6F-MPBXPKH-BN-SSP	3B6S15P6-BO	PAE Ball Valve NPT Conn.
6F-MPBXPKH-EPR-SSP	3B6S15P6-EPR	PAE Ball Valve NPT Conn.
6F-MPBXPKH-KZ-SSP	3B6S15P6-HT	PAE Ball Valve NPT Conn.
6F-MPBXPKH-V-SSP	3B6S15P6	PAE Ball Valve NPT Conn.
6F-MPBXPK-KZ-SSP	3B3S15P6-HT	PAE Ball Valve NPT Conn.
6F-MPBXPK-V-SSP	3B3S15P6	PAE Ball Valve NPT Conn.
6F-MPCBL-5-SS	CPB6600	PAE P Series Fitting/Tubing
6F-MPCL-5-V-SS	CPO6600	PAE P Series Fitting/Tubing
6F-MPNAB-T-SS	15P6072	PAE P Series Needle Valve
6F-MPNAR-T-SS	15P6082	PAE P Series Needle Valve
6F-MPNLB-T-SS	15P6071	PAE P Series Needle Valve
6F-MPNLR-T-SS	15P6081	PAE P Series Needle Valve
6F-MPNXBD-T-SS	15P6075	PAE P Series Needle Valve
6F-MPNXBI-T-SS	15P6073	PAE P Series Needle Valve
6F-MPNXBO-T-SS	15P6074	PAE P Series Needle Valve
6F-MPNXRD-T-SS	15P6085	PAE P Series Needle Valve
6F-MPNXRI-T-SS	15P6083	PAE P Series Needle Valve
6F-MPNXRO-T-SS	15P6084	PAE P Series Needle Valve
6MP7-MPBLPK-BN-SSP	6MP7-MAB4LPK-BN-SSP	Pages 52-69
6MP7-MPBLPK-BN-SSP-LD	6MP7-MAB4LPK-BN-SSP-LD	Pages 52-69
6MP7-MPBLPK-EPR-SSP	6MP7-MAB4LPK-EPR-SSP	Pages 52-69
6MP7-MPBLPK-EPR-SSP-LD	6MP7-MAB4LPK-EPR-SSP-LD	Pages 52-69
6MP7-MPBLPKH-V-SSP	6MP7-MAB6LPK-V-SSP	Pages 52-69
6MP7-MPBLPK-KZ-SSP	6MP7-MAB4LPK-KZ-SSP	Pages 52-69
6MP7-MPBLPK-KZ-SSP-LD	6MP7-MAB4LPK-KZ-SSP-LD	Pages 52-69
6MP7-MPBLPK-V-SSP	6MP7-MAB4LPK-V-SSP	Pages 52-69
6MP7-MPBLPK-V-SSP-HYD	6MP7-MAB4LPK-V-SSP	Pages 52-69
6MP7-MPBLPK-V-SSP-LD	6MP7-MAB4LPK-V-SSP-LD	Pages 52-69
6MP7-MPBXPK-BN-SSP	6MP7-MAB3XPK-BN-SSP	Pages 52-69
6MP7-MPBXPK-BN-SSP-LD	6MP7-MAB3XPK-BN-SSP-LD	Pages 52-69
6MP7-MPBXPKD-BN-SSP	6MP7-MAB3XPKD-BN-SSP	Pages 52-69
6MP7-MPBXPKD-EPR-SSP	6MP7-MAB3XPKD-EPR-SSP	Pages 52-69
6MP7-MPBXPKDH-BN-SSP	6MP7-MAB6XPKD-BN-SSP	Pages 52-69
6MP7-MPBXPKDH-EPR-SSP	6MP7-MAB6XPKD-EPR-SSP	Pages 52-69
6MP7-MPBXPKDH-KZ-SSP	6MP7-MAB6XPKD-KZ-SSP	Pages 52-69
6MP7-MPBXPKDH-V-SSP	6MP7-MAB6XPKD-V-SSP	Pages 52-69
6MP7-MPBXPKD-KZ-SSP	6MP7-MAB3XPKD-KZ-SSP	Pages 52-69
6MP7-MPBXPKD-V-SSP	6MP7-MAB3XPKD-V-SSP	Pages 52-69
6MP7-MPBXPK-EPR-SSP	6MP7-MAB3XPK-EPR-SSP	Pages 52-69
6MP7-MPBXPKH-BN-SSP	6MP7-MAB6XPK-BN-SSP	Pages 52-69
6MP7-MPBXPKH-BN-SSP-LD	6MP7-MAB6XPK-BN-SSP-LD	Pages 52-69
6MP7-MPBXPKH-EPR-SSP	6MP7-MAB6XPK-EPR-SSP	Pages 52-69
6MP7-MPBXPKH-EPR-SSP-LD	6MP7-MAB6XPK-EPR-SSP-LD	Pages 52-69
6MP7-MPBXPKH-KZ-SSP	6MP7-MAB6XPK-KZ-SSP	Pages 52-69
6MP7-MPBXPKH-KZ-SSP-LD	6MP7-MAB6XPK-KZ-SSP-LD	Pages 52-69
6MP7-MPBXPKH-V-SSP	6MP7-MAB6XPK-V-SSP	Pages 52-69
6MP7-MPBXPKH-V-SSP-LD	6MP7-MAB6XPK-V-SSP-LD	Pages 52-69
6MP7-MPBXPK-KZ-SSP	6MP7-MAB3XPK-KZ-SSP	Pages 52-69
6MP7-MPBXPK-KZ-SSP-LD	6MP7-MAB3XPK-KZ-SSP-LD	Pages 52-69

Part Number Crossover Chart

MPI™ Medium Pressure Products

Parker

MPI Part Numbers Sold Prior to July 2015 (includes Catalog 4234)	New Part Number	Additional Catalog Needed
6MP7-MPBXPK-V-SSP	6MP7-MAB3XPK-V-SSP	Pages 52-69
6MP7-MPCBL-5-SS	See 6MP7-MACBL-20-SS	Page 72
6MP7-MPCL-5-BN-SS	See 6MP7-MACL-20-BN-SS	Page 72
6MP7-MPCL-5-V-SS	See 6MP7-MACL-20-V-SS	Page 72
6MP7-MPFL-100-SS	6MP7-MAFCL-100-SS	Pages 70-71
6MP7-MPFL-35-SS	6MP7-MAFCL-35-SS	Pages 70-71
6MP7-MPFL-40-SS	See 6MP7-MAFCL-35-SS	Pages 70-71
6MP7-MPFL-5-SS	6MP7-MAFCL-5-SS	Pages 70-71
6MP7-MPFL-65-SS	6MP7-MAFCL-65-SS	Pages 70-71
6MP7-MPGV-V-SS	6MP7-MAGV-T-SS	Page 50
6MP7-MPNAB-G-SS-HT	6MP7-MANAB-GY-SS-HT	Pages 35-47
6MP7-MPNABR-G-SS-HT	6MP7-MANABR-GY-SS-HT	Pages 35-47
6MP7-MPNABR-T-SS	6MP7-MANABR-T-SS	Pages 35-47
6MP7-MPNAB-T-SS	6MP7-MANAB-T-SS	Pages 35-47
6MP7-MPNAR-G-SS-HT	6MP7-MANAR-GY-SS-HT	Pages 35-47
6MP7-MPNARR-G-SS-HT	6MP7-MANARR-GY-SS-HT	Pages 35-47
6MP7-MPNARR-T-SS	6MP7-MANARR-T-SS	Pages 35-47
6MP7-MPNAR-T-SS	6MP7-MANAR-T-SS	Pages 35-47
6MP7-MPNLB-G-SS-HT	6MP7-MANLB-GY-SS-HT	Pages 35-47
6MP7-MPNLB-T-SS	6MP7-MANLB-T-SS	Pages 35-47
6MP7-MPNLR-G-SS-HT	6MP7-MANLR-GY-SS-HT	Pages 35-47
6MP7-MPNLR-T-SS	6MP7-MANLR-T-SS	Pages 35-47
6MP7-MPNXBD-G-SS-HT	6MP7-MANXBD-GY-SS-HT	Pages 35-47
6MP7-MPNXBD-T-SS	6MP7-MANXBD-T-SS	Pages 35-47
6MP7-MPNXBI-G-SS-HT	6MP7-MANXBI-GY-SS-HT	Pages 35-47
6MP7-MPNXBI-T-SS	6MP7-MANXBI-T-SS	Pages 35-47
6MP7-MPNXBO-G-SS-HT	6MP7-MANXBO-GY-SS-HT	Pages 35-47
6MP7-MPNXBO-T-SS	6MP7-MANXBO-T-SS	Pages 35-47
6MP7-MPNXRD-G-SS-HT	6MP7-MANXRD-GY-SS-HT	Pages 35-47
6MP7-MPNXRD-T-SS	6MP7-MANXRD-T-SS	Pages 35-47
6MP7-MPNXRI-G-SS-HT	6MP7-MANXRI-GY-SS-HT	Pages 35-47
6MP7-MPNXRI-T-SS	6MP7-MANXRI-T-SS	Pages 35-47
6MP7-MPNXRO-G-SS-HT	6MP7-MANXRO-GY-SS-HT	Pages 35-47
6MP7-MPNXRO-T-SS	6MP7-MANXRO-T-SS	Pages 35-47
6T7-MPBV-V-SS	6T7-MABV-V-SS	Page 57
8F-MAB12LPK-BN-SSP	2B12S15P8-BO	PAE Ball Valve NPT Conn.
8F-MAB12LPK-EPR-SSP	2B12S15P8-EPR	PAE Ball Valve NPT Conn.
8F-MAB12LPK-KZ-SSP	2B12S15P8-C	PAE Ball Valve NPT Conn.
8F-MAB12LPK-V-SSP	2B12S15P8	PAE Ball Valve NPT Conn.
8F-MAB3XPK-BN-SSP	3B3S15P8-BO	PAE Ball Valve NPT Conn.
8F-MAB3XPKD-BN-SSP	3BD3S15P8-BO	PAE Ball Valve NPT Conn.
8F-MAB3XPKD-EPR-SSP	3BD3S15P8-EPR	PAE Ball Valve NPT Conn.
8F-MAB3XPKD-KZ-SSP	3BD3S15P8-HT	PAE Ball Valve NPT Conn.
8F-MAB3XPKD-V-SSP	3BD3S15P8	PAE Ball Valve NPT Conn.
8F-MAB3XPK-EPR-SSP	3B3S15P8-EPR	PAE Ball Valve NPT Conn.
8F-MAB3XPK-KZ-SSP	3B3S15P8-HT	PAE Ball Valve NPT Conn.
8F-MAB3XPK-V-SSP	3B3S15P8	PAE Ball Valve NPT Conn.
8F-MAB4LPK-BN-SSP	2B4S15P8-BO	PAE Ball Valve NPT Conn.
8F-MAB4LPK-EPR-SSP	2B4S15P8-EPR	PAE Ball Valve NPT Conn.
8F-MAB4LPK-KZ-SSP	2B4S15P8-HT	PAE Ball Valve NPT Conn.
8F-MAB4LPK-V-SSP	2B4S15P8	PAE Ball Valve NPT Conn.
8F-MAB6LPK-BN-SSP	2B6S15P8-BO	PAE Ball Valve NPT Conn.
8F-MAB6LPK-EPR-SSP	2B6S15P8-EPR	PAE Ball Valve NPT Conn.
8F-MAB6LPK-KZ-SSP	2B6S15P8-HT	PAE Ball Valve NPT Conn.
8F-MAB6LPK-V-SSP	2B6S15P8	PAE Ball Valve NPT Conn.
8F-MAB6XPK-BN-SSP	3B6S15P8-BO	PAE Ball Valve NPT Conn.
8F-MAB6XPKD-BN-SSP	3BD6S15P8-BO	PAE Ball Valve NPT Conn.
8F-MAB6XPKD-EPR-SSP	3BD6S15P8-EPR	PAE Ball Valve NPT Conn.
8F-MAB6XPKD-KZ-SSP	3BD6S15P8-HT	PAE Ball Valve NPT Conn.
8F-MAB6XPKD-V-SSP	3BD6S15P8	PAE Ball Valve NPT Conn.
8F-MAB6XPK-EPR-SSP	3B6S15P8-EPR	PAE Ball Valve NPT Conn.
8F-MAB6XPK-KZ-SSP	3B6S15P8-HT	PAE Ball Valve NPT Conn.
8F-MAB6XPK-V-SSP	3B6S15P8	PAE Ball Valve NPT Conn.
8F-MAB8LPK-BN-SSP	2B8S15P8-BO	PAE Ball Valve NPT Conn.
8F-MAB8LPK-EPR-SSP	2B8S15P8-EPR	PAE Ball Valve NPT Conn.
8F-MAB8LPK-KZ-SSP	2B8S15P8-HT	PAE Ball Valve NPT Conn.
8F-MAB8LPK-V-SSP	2B8S15P8	PAE Ball Valve NPT Conn.
8F-MACBL-20-SS	CPB8800	PAE P Series Fitting/Tubing
8F-MACL-20-V-SS	CPO8800	PAE P Series Fitting/ Tubing
8F-MADBB6LPK-BN-SS	6DB15P8P4-BO	PAE Ball Valve NPT Conn.
8F-MADBB6LPK-EPR-SS	6DB15P8P4-EPR	PAE Ball Valve NPT Conn.
8F-MADBB6LPK-KZ-SS	6DB15P8P4-HT	PAE Ball Valve NPT Conn.
8F-MADBB6LPK-V-SS	6DB15P8P4	PAE Ball Valve NPT Conn.
8F-MANAB-T-SS	15P8072	PAE P Series Needle Valve
8F-MANAR-T-SS	15P8082	PAE P Series Needle Valve

MPI Part Numbers Sold Prior to July 2015 (includes Catalog 4234)	New Part Number	Additional Catalog Needed
8F-MANLB-T-SS	15P8071	PAE P Series Needle Valve
8F-MANLR-T-SS	15P8081	PAE P Series Needle Valve
8F-MANXBD-T-SS	15P8075	PAE P Series Needle Valve
8F-MANXBI-T-SS	15P8073	PAE P Series Needle Valve
8F-MANXBO-T-SS	15P8074	PAE P Series Needle Valve
8F-MANXRD-T-SS	15P8085	PAE P Series Needle Valve
8F-MANXRI-T-SS	15P8083	PAE P Series Needle Valve
8F-MANXRO-T-SS	15P8084	PAE P Series Needle Valve
8F-MPBLPK-BN-SSP	2B4S15P8-BO	PAE Ball Valve NPT Conn.
8F-MPBLPK-EPR-SSP	2B4S15P8-EPR	PAE Ball Valve NPT Conn.
8F-MPBLPKH-BN-SSP	2B6S15P8-BO	PAE Ball Valve NPT Conn.
8F-MPBLPKH-EPR-SSP	2B6S15P8-EPR	PAE Ball Valve NPT Conn.
8F-MPBLPKH-KZ-SSP	2B6S15P8-HT	PAE Ball Valve NPT Conn.
8F-MPBLPKH-V-SSP	2B6S15P8	PAE Ball Valve NPT Conn.
8F-MPBLPK-KZ-SSP	2B4S15P8-HT	PAE Ball Valve NPT Conn.
8F-MPBLPKUH-BN-SSP	2B8S15P8-BO	PAE Ball Valve NPT Conn.
8F-MPBLPKUH-EPR-SSP	2B8S15P8-EPR	PAE Ball Valve NPT Conn.
8F-MPBLPKUH-KZ-SSP	2B8S15P8-HT	PAE Ball Valve NPT Conn.
8F-MPBLPKUH-V-SSP	2B8S15P8	PAE Ball Valve NPT Conn.
8F-MPBLPK-V-SSP	2B4S15P8	PAE Ball Valve NPT Conn.
8F-MPBXPK-BN-SSP	3B3S15P8-BO	PAE Ball Valve NPT Conn.
8F-MPBXPKD-BN-SSP	3BD3S15P8-BO	PAE Ball Valve NPT Conn.
8F-MPBXPKD-EPR-SSP	3BD3S15P8-EPR	PAE Ball Valve NPT Conn.
8F-MPBXPKDH-BN-SSP	3BD6S15P8-BO	PAE Ball Valve NPT Conn.
8F-MPBXPKDH-EPR-SSP	3BD6S15P8-EPR	PAE Ball Valve NPT Conn.
8F-MPBXPKDH-KZ-SSP	3BD6S15P8-HT	PAE Ball Valve NPT Conn.
8F-MPBXPKDH-V-SSP	3BD6S15P8	PAE Ball Valve NPT Conn.
8F-MPBXPKD-KZ-SSP	3BD3S15P8-HT	PAE Ball Valve NPT Conn.
8F-MPBXPKD-V-SSP	3BD3S15P8	PAE Ball Valve NPT Conn.
8F-MPBXPK-EPR-SSP	3B3S15P8-EPR	PAE Ball Valve NPT Conn.
8F-MPBXPKH-BN-SSP	3B6S15P8-BO	PAE Ball Valve NPT Conn.
8F-MPBXPKH-EPR-SSP	3B6S15P8-EPR	PAE Ball Valve NPT Conn.
8F-MPBXPKH-KZ-SSP	3B6S15P8-HT	PAE Ball Valve NPT Conn.
8F-MPBXPKH-V-SSP	3B6S15P8	PAE Ball Valve NPT Conn.
8F-MPBXPK-KZ-SSP	3B3S15P8-HT	PAE Ball Valve NPT Conn.
8F-MPBXPK-V-SSP	3B3S15P8	PAE Ball Valve NPT Conn.
8F-MPCBL-5-SS	CPB8800	PAE P Series Fitting/Tubing
8F-MPCL-5-V-SS	CPO8800	PAE P Series Fitting/Tubing
8F-MPNAB-T-SS	15P8072	PAE P Series Needle Valve
8F-MPNAR-T-SS	15P8082	PAE P Series Needle Valve
8F-MPNLB-T-SS	15P8071	PAE P Series Needle Valve
8F-MPNLR-T-SS	15P8081	PAE P Series Needle Valve
8F-MPNXBD-T-SS	15P8075	PAE P Series Needle Valve
8F-MPNXBI-T-SS	15P8073	PAE P Series Needle Valve
8F-MPNXBO-T-SS	15P8074	PAE P Series Needle Valve
8F-MPNXRD-T-SS	15P8085	PAE P Series Needle Valve
8F-MPNXRI-T-SS	15P8083	PAE P Series Needle Valve
8F-MPNXRO-T-SS	15P8084	PAE P Series Needle Valve
8M8F-MARA-****-SS	5PRVP8072 W/ ADAPTER	PAE P Series Relief Valve
8M8F-MARA-****-SS	10PRVP8072 W/ ADAPTER	PAE P Series Relief Valve
8M8F-MARA-****-SS	15PRVP8072 W/ ADAPTER	PAE P Series Relief Valve
8M8F-MARSA-****-SS	5PRVS8072 W/ ADAPTER	PAE P Series Relief Valve
8M8F-MARSA-****-SS	10PRVS8072 W/ ADAPTER	PAE P Series Relief Valve
8M8F-MARSA-****-SS	15PRVS8072 W/ ADAPTER	PAE P Series Relief Valve
8M8F-MPRA-****-SS	5PRVP8072 W/ ADAPTER	PAE P Series Relief Valve
8M8F-MPRA-****-SS	10PRVP8072 W/ ADAPTER	PAE P Series Relief Valve
8M8F-MPRA-****-SS	15PRVP8072 W/ ADAPTER	PAE P Series Relief Valve
8MP78F-MARA-****-SS	8MP712F-MARA-****-SS	Pages 73-76
8MP78F-MARSA-****-SS	8MP712F-MARSA-****-SS	Pages 73-76
8MP78F-MPRA-****-SS	8MP712F-MARA-****-SS	Pages 73-76
8MP7-MPBLPK-BN-SSP	8MP7-MAB4LPK-BN-SSP	Pages 52-69
8MP7-MPBLPK-BN-SSP-LD	8MP7-MAB4LPK-BN-SSP-LD	Pages 52-69
8MP7-MPBLPK-EPR-SSP	8MP7-MAB4LPK-EPR-SSP	Pages 52-69
8MP7-MPBLPK-EPR-SSP-LD	8MP7-MAB4LPK-EPR-SSP-LD	Pages 52-69
8MP7-MPBLPKH-BN-SSP	8MP7-MAB6LPK-BN-SSP	Pages 52-69
8MP7-MPBLPKH-BN-SSP-LD	8MP7-MAB6LPK-BN-SSP-LD	Pages 52-69
8MP7-MPBLPKH-EPR-SSP	8MP7-MAB6LPK-EPR-SSP	Pages 52-69
8MP7-MPBLPKH-EPR-SSP-LD	8MP7-MAB6LPK-EPR-SSP-LD	Pages 52-69
8MP7-MPBLPKH-KZ-SSP	8MP7-MAB6LPK-KZ-SSP	Pages 52-69
8MP7-MPBLPKH-KZ-SSP-LD	8MP7-MAB6LPK-KZ-SSP-LD	Pages 52-69
8MP7-MPBLPKH-V-SSP	8MP7-MAB6LPK-V-SSP	Pages 52-69
8MP7-MPBLPKH-V-SSP-HYD	8MP7-MAB6LPK-V-SSP	Pages 52-69
8MP7-MPBLPKH-V-SSP-LD	8MP7-MAB6LPK-V-SSP-LD	Pages 52-69
8MP7-MPBLPK-KZ-SSP	8MP7-MAB4LPK-KZ-SSP	Pages 52-69
8MP7-MPBLPK-KZ-SSP-LD	8MP7-MAB4LPK-KZ-SSP-LD	Pages 52-69

Tel: +45 63 12 83 00 | Email: ps@hymatik.com | www.hymatik.com | Hvidkaervej 27a, DK-5250 Odense SV, Denmark

Parker MPI™ Medium Pressure Products

MPI Part Numbers Sold Prior to July 2015 (includes Catalog 4234)	New Part Number	Additional Catalog Needed
8MP7-MPBLPK-V-SSP	8MP7-MAB4LPK-V-SSP	Pages 52-69
8MP7-MPBLPK-V-SSP-LD	8MP7-MAB4LPK-V-SSP-LD	Pages 52-69
8MP7-MPBXPK-BN-SSP	8MP7-MAB3XPK-BN-SSP	Pages 52-69
8MP7-MPBXPKD-BN-SSP	8MP7-MAB3XPKD-BN-SSP	Pages 52-69
8MP7-MPBXPKD-EPR-SSP	8MP7-MAB3XPKD-EPR-SSP	Pages 52-69
8MP7-MPBXPKDH-BN-SSP	8MP7-MAB6XPKD-BN-SSP	Pages 52-69
8MP7-MPBXPKDH-EPR-SSP	8MP7-MAB6XPKD-EPR-SSP	Pages 52-69
8MP7-MPBXPKDH-KZ-SSP	8MP7-MAB6XPKD-KZ-SSP	Pages 52-69
8MP7-MPBXPKDH-V-SSP	8MP7-MAB6XPKD-V-SSP	Pages 52-69
8MP7-MPBXPKD-KZ-SSP	8MP7-MAB3XPKD-KZ-SSP	Pages 52-69
8MP7-MPBXPKD-V-SSP	8MP7-MAB3XPKD-V-SSP	Pages 52-69
8MP7-MPBXPK-EPR-SSP	8MP7-MAB3XPK-EPR-SSP	Pages 52-69
8MP7-MPBXPKH-BN-SSP	8MP7-MAB6XPK-BN-SSP	Pages 52-69
8MP7-MPBXPKH-BN-SSP-LD	8MP7-MAB6XPK-BN-SSP-LD	Pages 52-69
8MP7-MPBXPKH-EPR-SSP	8MP7-MAB6XPK-EPR-SSP	Pages 52-69
8MP7-MPBXPKH-EPR-SSP-LD	8MP7-MAB6XPK-EPR-SSP-LD	Pages 52-69
8MP7-MPBXPKH-KZ-SSP	8MP7-MAB6XPK-KZ-SSP	Pages 52-69
8MP7-MPBXPKH-KZ-SSP-LD	8MP7-MAB6XPK-KZ-SSP-LD	Pages 52-69
8MP7-MPBXPKH-V-SSP	8MP7-MAB6XPK-V-SSP	Pages 52-69
8MP7-MPBXPKH-V-SSP-LD	8MP7-MAB6XPK-V-SSP-LD	Pages 52-69
8MP7-MPBXPK-KZ-SSP	8MP7-MAB3XPK-KZ-SSP	Pages 52-69
8MP7-MPBXPK-V-SSP	8MP7-MAB3XPK-V-SSP	Pages 52-69
8MP7-MPCBL-25-SS	See 8MP7-MACBL-20-SS	Page 72
8MP7-MPCBL-5-SS	See 8MP7-MACBL-20-SS	Page 72
8MP7-MPCBL-80-SS	8MP7-MACBL-80-SS	Page 72
8MP7-MPCL-5-BN-SS	See 8MP7-MACL-20-BN-SS	Page 72
8MP7-MPCL-5-T-SS	See 8MP7-MACL-20-TO-SS	Page 72
8MP7-MPCL-5-V-SS	See 8MP7-MACL-20-V-SS	Page 72
8MP7-MPFL-100-SS	8MP7-MAFCL-100-SS	Page 50
8MP7-MPFL-10-SS	8MP7-MAFCL-10-SS	Pages 35-47
8MP7-MPFL-35-SS	8MP7-MAFCL-35-SS	Pages 35-47
8MP7-MPFL-40-SS	See 8MP7-MAFCL-35-SS	Pages 35-47
8MP7-MPFL-5-SS	8MP7-MAFCL-5-SS	Pages 35-47
8MP7-MPFL-65-SS	8MP7-MAFCL-65-SS	Pages 35-47
8MP7-MPGV-V-SS	8MP7-MAGV-T-SS	Pages 35-47
8MP7-MPNAB-G-SS-HT	8MP7-MANAB-GY-SS-HT	Pages 35-47
8MP7-MPNABR-G-SS-HT	8MP7-MANABR-GY-SS-HT	Pages 35-47
8MP7-MPNABR-T-SS	8MP7-MANABR-T-SS	Pages 35-47
8MP7-MPNAB-T-SS	8MP7-MANAB-T-SS	Pages 35-47
8MP7-MPNAR-G-SS-HT	8MP7-MANAR-GY-SS-HT	Pages 35-47
8MP7-MPNARR-G-SS-HT	8MP7-MANARR-GY-SS-HT	Pages 35-47
8MP7-MPNARR-T-SS	8MP7-MANARR-T-SS	Pages 35-47
8MP7-MPNAR-T-SS	8MP7-MANAR-T-SS	Pages 35-47
8MP7-MPNLB-G-SS-HT	8MP7-MANLB-GY-SS-HT	Pages 35-47
8MP7-MPNLB-T-SS	8MP7-MANLB-T-SS	Pages 35-47
8MP7-MPNLR-G-SS-HT	8MP7-MANLR-GY-SS-HT	Pages 35-47
8MP7-MPNLR-T-SS	8MP7-MANLR-T-SS	Pages 35-47
8MP7-MPNLR-T-SS-HYD	8MP7-MANLR-T-SS	Pages 35-47
8MP7-MPNXBD-G-SS-HT	8MP7-MANXBD-GY-SS-HT	Pages 35-47
8MP7-MPNXBD-T-SS	8MP7-MANXBD-T-SS	Pages 35-47
8MP7-MPNXBI-G-SS-HT	8MP7-MANXBI-GY-SS-HT	Pages 35-47
8MP7-MPNXBI-T-SS	8MP7-MANXBI-T-SS	Pages 35-47
8MP7-MPNXBO-EPR-SS	Not Available	Pages 35-47
8MP7-MPNXBO-G-SS-HT	8MP7-MANXBO-GY-SS-HT	Pages 35-47
8MP7-MPNXBO-T-SS	8MP7-MANXBO-T-SS	Pages 35-47
8MP7-MPNXRD-G-SS-HT	8MP7-MANXRD-GY-SS-HT	Pages 35-47
8MP7-MPNXRD-T-SS	8MP7-MANXRD-T-SS	Pages 35-47
8MP7-MPNXRI-G-SS-HT	8MP7-MANXRI-GY-SS-HT	Pages 35-47
8MP7-MPNXRI-T-SS	8MP7-MANXRI-T-SS	Pages 35-47
8MP7-MPNXRO-G-SS-HT	8MP7-MANXRO-GY-SS-HT	Pages 35-47
8MP7-MPNXRO-T-SS	8MP7-MANXRO-T-SS	Pages 35-47
8T7-MPBV-V-SS	8T7-MABV-V-SS	Page 51
9HF8F-MARA-****-SS	15RVP9072 W/ ADAPTER	PAE Relief Valve
9HF8F-MARA-****-SS	20RVP9072 W/ ADAPTER	PAE Relief Valve
9HF8F-MARSA-****-SS	20RVS9072 W/ ADAPTER	PAE Relief Valve
9HF8F-MPRA-****-SS	15RVP9072 W/ ADAPTER	PAE Relief Valve
9HF8F-MPRA-****-SS	20RVP9072 W/ ADAPTER	PAE Relief Valve
9HF-MPGV-V-SS	30GV9078	PAE Block and Bleed Valve
9HM-MPBV-V-SS	30BV9002	PAE Block and Bleed Valve
9MP78F-MARA-****-SS	9MP712F-MARA-****-SS	Pages 73-76
9MP78F-MARSA-****-SS	9MP712F-MARSA-****-SS	Pages 73-76
9MP78F-MPRA-****-SS	9MP712F-MARA-****-SS	Pages 73-76
9MP7-MANABH-T-SS	9MP7-MANAB-T-SS	Pages 35-47
9MP7-MANABH-T-SS-LTB	9MP7-MANAB-T-SS-LTB	Pages 35-47
9MP7-MANABRH-T-SS	9MP7-MANABR-T-SS	Pages 35-47

MPI Part Numbers Sold Prior to July 2015 (includes Catalog 4234)	New Part Number	Additional Catalog Needed
9MP7-MANABRH-T-SS-LTB	9MP7-MANABR-T-SS-LTB	Pages 35-47
9MP7-MANARH-T-SS	9MP7-MANAR-T-SS	Pages 35-47
9MP7-MANARH-T-SS-LTB	9MP7-MANAR-T-SS-LTB	Pages 35-47
9MP7-MANARRH-T-SS	9MP7-MANARR-T-SS	Pages 35-47
9MP7-MANARRH-T-SS-LTB	9MP7-MANARR-T-SS-LTB	Pages 35-47
9MP7-MANLBH-T-SS	9MP7-MANLB-T-SS	Pages 35-47
9MP7-MANLBH-T-SS-LTB	9MP7-MANLB-T-SS-LTB	Pages 35-47
9MP7-MANLRH-T-SS	9MP7-MANLR-T-SS	Pages 35-47
9MP7-MANLRH-T-SS-LTB	9MP7-MANLR-T-SS-LTB	Pages 35-47
9MP7-MANXBDH-T-SS	9MP7-MANXBD-T-SS	Pages 35-47
9MP7-MANXBDH-T-SS-LTB	9MP7-MANXBD-T-SS-LTB	Pages 35-47
9MP7-MANXBIH-T-SS	9MP7-MANXBI-T-SS	Pages 35-47
9MP7-MANXBIH-T-SS-LTB	9MP7-MANXBI-T-SS-LTB	Pages 35-47
9MP7-MANXBOH-T-SS	9MP7-MANXBO-T-SS	Pages 35-47
9MP7-MANXBOH-T-SS-LTB	9MP7-MANXBO-T-SS-LTB	Pages 35-47
9MP7-MANXRDH-T-SS	9MP7-MANXRD-T-SS	Pages 35-47
9MP7-MANXRDH-T-SS-LTB	9MP7-MANXRD-T-SS-LTB	Pages 35-47
9MP7-MANXRIH-T-SS	9MP7-MANXRI-T-SS	Pages 35-47
9MP7-MANXRIH-T-SS-LTB	9MP7-MANXRI-T-SS-LTB	Pages 35-47
9MP7-MANXROH-T-SS	9MP7-MANXRO-T-SS	Pages 35-47
9MP7-MANXROH-T-SS-LTB	9MP7-MANXRO-T-SS-LTB	Pages 35-47
9MP7-MPBLPK-BN-SSP	9MP7-MAB4LPK-BN-SSP	Pages 52-69
9MP7-MPBLPK-BN-SSP-LD	9MP7-MAB4LPK-BN-SSP-LD	Pages 52-69
9MP7-MPBLPK-EPR-SSP	9MP7-MAB4LPK-EPR-SSP	Pages 52-69
9MP7-MPBLPK-EPR-SSP-LD	9MP7-MAB4LPK-EPR-SSP-LD	Pages 52-69
9MP7-MPBLPKH-BN-SSP	9MP7-MAB6LPK-BN-SSP	Pages 52-69
9MP7-MPBLPKH-BN-SSP-LD	9MP7-MAB6LPK-BN-SSP-LD	Pages 52-69
9MP7-MPBLPKH-EPR-SSP	9MP7-MAB6LPK-EPR-SSP	Pages 52-69
9MP7-MPBLPKH-EPR-SSP-LD	9MP7-MAB6LPK-EPR-SSP-LD	Pages 52-69
9MP7-MPBLPKH-KZ-SSP	9MP7-MAB6LPK-KZ-SSP	Pages 52-69
9MP7-MPBLPKH-KZ-SSP-LD	9MP7-MAB6LPK-KZ-SSP-LD	Pages 52-69
9MP7-MPBLPKH-V-SSP	9MP7-MAB6LPK-V-SSP	Pages 52-69
9MP7-MPBLPKH-V-SSP-LD	9MP7-MAB6LPK-V-SSP-LD	Pages 52-69
9MP7-MPBLPK-KZ-SSP	9MP7-MAB4LPK-KZ-SSP	Pages 52-69
9MP7-MPBLPK-KZ-SSP-LD	9MP7-MAB4LPK-KZ-SSP-LD	Pages 52-69
9MP7-MPBLPK-V-SSP	9MP7-MAB4LPK-V-SSP	Pages 52-69
9MP7-MPBLPK-V-SSP-LD	9MP7-MAB4LPK-V-SSP-LD	Pages 52-69
9MP7-MPBXPK-BN-SSP	9MP7-MAB3XPK-BN-SSP	Pages 52-69
9MP7-MPBXPKD-BN-SSP	9MP7-MAB3XPKD-BN-SSP	Pages 52-69
9MP7-MPBXPKD-EPR-SSP	9MP7-MAB3XPKD-EPR-SSP	Pages 52-69
9MP7-MPBXPKDH-BN-SSP	9MP7-MAB6XPKD-BN-SSP	Pages 52-69
9MP7-MPBXPKDH-EPR-SSP	9MP7-MAB6XPKD-EPR-SSP	Pages 52-69
9MP7-MPBXPKDH-KZ-SSP	9MP7-MAB6XPKD-KZ-SSP	Pages 52-69
9MP7-MPBXPKDH-V-SSP	9MP7-MAB6XPKD-V-SSP	Pages 52-69
9MP7-MPBXPKDH-V-SSP-LD	9MP7-MAB6XPKD-V-SSP-LD	Pages 52-69
9MP7-MPBXPKD-KZ-SSP	9MP7-MAB3XPKD-KZ-SSP	Pages 52-69
9MP7-MPBXPKD-V-SSP	9MP7-MAB3XPKD-V-SSP	Pages 52-69
9MP7-MPBXPK-EPR-SSP	9MP7-MAB3XPK-EPR-SSP	Pages 52-69
9MP7-MPBXPKH-BN-SSP	9MP7-MAB6XPK-BN-SSP	Pages 52-69
9MP7-MPBXPKH-BN-SSP-LD	9MP7-MAB6XPK-BN-SSP-LD	Pages 52-69
9MP7-MPBXPKH-EPR-SSP	9MP7-MAB6XPK-EPR-SSP	Pages 52-69
9MP7-MPBXPKH-EPR-SSP-LD	9MP7-MAB6XPK-EPR-SSP-LD	Pages 52-69
9MP7-MPBXPKH-KZ-SSP	9MP7-MAB6XPK-KZ-SSP	Pages 52-69
9MP7-MPBXPKH-KZ-SSP-LD	9MP7-MAB6XPK-KZ-SSP-LD	Pages 52-69
9MP7-MPBXPKH-V-SSP	9MP7-MAB6XPK-V-SSP	Pages 52-69
9MP7-MPBXPKH-V-SSP-LD	9MP7-MAB6XPK-V-SSP-LD	Pages 52-69
9MP7-MPBXPK-KZ-SSP	9MP7-MAB3XPK-KZ-SSP	Pages 52-69
9MP7-MPBXPK-V-SSP	9MP7-MAB3XPK-V-SSP	Pages 52-69
9MP7-MPCBL-5-SS	See 9MP7-MACBL-20-SS	Page 72
9MP7-MPCL-5-BN-SS	See 9MP7-MACBL-20-SS	Page 72
9MP7-MPCL-5-V-SS	See 9MP7-MACL-20-BN-SS	Page 72
9MP7-MPFL-0.5-SS	9MP7-MAFCL-0.5-SS	Page 70-71
9MP7-MPFL-100-SS	9MP7-MAFCL-100-SS	Page 70-71
9MP7-MPFL-10-SS	9MP7-MAFCL-10-SS	Page 70-71
9MP7-MPFL-35-SS	9MP7-MAFCL-35-SS	Page 70-71
9MP7-MPFL-40-SS	See 9MP7-MAFCL-35-SS	Page 70-71
9MP7-MPFL-5-SS	9MP7-MAFCL-5-SS	Page 70-71
9MP7-MPFL-65-SS	9MP7-MAFCL-65-SS	Page 70-71
9MP7-MPGV-V-SS	9MP7-MAGV-T-SS	Page 50
9MP7-MPNAB-G-SS-HT	9MP7-MANAB-GY-SS-HT	Pages 35-47
9MP7-MPNABH-T-SS	9MP7-MANAB-T-SS	Pages 35-47
9MP7-MPNABH-T-SS-LTB	9MP7-MANAB-T-SS-LTB	Pages 35-47
9MP7-MPNABR-G-SS-HT	9MP7-MANABR-GY-SS-HT	Pages 35-47
9MP7-MPNABRH-T-SS	9MP7-MANABR-T-SS	Pages 35-47
9MP7-MPNABRH-T-SS-LTB	9MP7-MANABR-T-SS-LTB	Pages 35-47

Part Number Crossover Chart

MPI™ Medium Pressure Products

Parker

MPI Part Numbers Sold Prior to July 2015 (includes Catalog 4234)	New Part Number	Additional Catalog Needed
9MP7-MPNABR-T-SS	9MP7-MANABR-T-SS	Pages 35-47
9MP7-MPNABR-T-SS-LTB	9MP7-MANABR-T-SS-LTB	Pages 35-47
9MP7-MPNAB-T-SS	9MP7-MANAB-T-SS	Pages 35-47
9MP7-MPNAB-T-SS-LTB	9MP7-MANAB-T-SS-LTB	Pages 35-47
9MP7-MPNAR-G-SS-HT	9MP7-MANAR-GY-SS-HT	Pages 35-47
9MP7-MPNARH-T-SS	9MP7-MANAR-T-SS	Pages 35-47
9MP7-MPNARH-T-SS-LTB	9MP7-MANAR-T-SS-LTB	Pages 35-47
9MP7-MPNARR-G-SS-HT	9MP7-MANARR-GY-SS-HT	Pages 35-47
9MP7-MPNARRH-T-SS	9MP7-MANARR-T-SS	Pages 35-47
9MP7-MPNARRH-T-SS-LTB	9MP7-MANARR-T-SS-LTB	Pages 35-47
9MP7-MPNARR-T-SS	9MP7-MANARR-T-SS	Pages 35-47
9MP7-MPNARR-T-SS-LTB	9MP7-MANARR-T-SS-LTB	Pages 35-47
9MP7-MPNAR-T-SS	9MP7-MANAR-T-SS	Pages 35-47
9MP7-MPNAR-T-SS-LTB	9MP7-MANAR-T-SS-LTB	Pages 35-47
9MP7-MPNLB-G-SS-HT	9MP7-MANLB-GY-SS-HT	Pages 35-47
9MP7-MPNLBH-T-SS	9MP7-MANLB-T-SS	Pages 35-47
9MP7-MPNLBH-T-SS-LTB	9MP7-MANLB-T-SS-LTB	Pages 35-47
9MP7-MPNLB-T-SS	9MP7-MANLB-T-SS	Pages 35-47
9MP7-MPNLB-T-SS-LTB	9MP7-MANLB-T-SS-LTB	Pages 35-47
9MP7-MPNLR-G-SS-HT	9MP7-MANLR-GY-SS-HT	Pages 35-47
9MP7-MPNLRH-T-SS	9MP7-MANLR-T-SS	Pages 35-47
9MP7-MPNLRH-T-SS-LTB	9MP7-MANLR-T-SS-LTB	Pages 35-47
9MP7-MPNLR-T-SS	9MP7-MANLR-T-SS	Pages 35-47
9MP7-MPNLR-T-SS-LTB	9MP7-MANLR-T-SS-LTB	Pages 35-47
9MP7-MPNXBD-G-SS-HT	9MP7-MANXBD-GY-SS-HT	Pages 35-47
9MP7-MPNXBDH-T-SS	9MP7-MANXBD-T-SS	Pages 35-47
9MP7-MPNXBDH-T-SS-LTB	9MP7-MANXBD-T-SS-LTB	Pages 35-47
9MP7-MPNXBD-T-SS	9MP7-MANXBD-T-SS	Pages 35-47
9MP7-MPNXBD-T-SS-LTB	9MP7-MANXBD-T-SS-LTB	Pages 35-47
9MP7-MPNXBI-G-SS-HT	9MP7-MANXBI-GY-SS-HT	Pages 35-47
9MP7-MPNXBIH-T-SS	9MP7-MANXBI-T-SS	Pages 35-47
9MP7-MPNXBIH-T-SS-LTB	9MP7-MANXBI-T-SS-LTB	Pages 35-47
9MP7-MPNXBI-T-SS	9MP7-MANXBI-T-SS	Pages 35-47
9MP7-MPNXBI-T-SS-LTB	9MP7-MANXBI-T-SS-LTB	Pages 35-47
9MP7-MPNXBO-G-SS-HT	9MP7-MANXBO-GY-SS-HT	Pages 35-47
9MP7-MPNXBOH-T-SS	9MP7-MANXBO-T-SS	Pages 35-47
9MP7-MPNXBOH-T-SS-LTB	9MP7-MANXBO-T-SS-LTB	Pages 35-47
9MP7-MPNXBO-T-SS	9MP7-MANXBO-T-SS	Pages 35-47
9MP7-MPNXBO-T-SS-LTB	9MP7-MANXBO-T-SS-LTB	Pages 35-47
9MP7-MPNXRD-G-SS-HT	9MP7-MANXRD-GY-SS-HT	Pages 35-47
9MP7-MPNXRDH-T-SS	9MP7-MANXRD-T-SS	Pages 35-47
9MP7-MPNXRDH-T-SS-LTB	9MP7-MANXRD-T-SS-LTB	Pages 35-47
9MP7-MPNXRD-T-SS	9MP7-MANXRD-T-SS	Pages 35-47
9MP7-MPNXRD-T-SS-LTB	9MP7-MANXRD-T-SS-LTB	Pages 35-47
9MP7-MPNXRI-G-SS-HT	9MP7-MANXRI-GY-SS-HT	Pages 35-47
9MP7-MPNXRIH-T-SS	9MP7-MANXRI-T-SS	Pages 35-47
9MP7-MPNXRIH-T-SS-LTB	9MP7-MANXRI-T-SS-LTB	Pages 35-47
9MP7-MPNXRI-T-SS	9MP7-MANXRI-T-SS	Pages 35-47
9MP7-MPNXRI-T-SS-LTB	9MP7-MANXRI-T-SS-LTB	Pages 35-47
9MP7-MPNXRO-G-SS-HT	9MP7-MANXRO-GY-SS-HT	Pages 35-47
9MP7-MPNXROH-T-SS	9MP7-MANXRO-T-SS	Pages 35-47
9MP7-MPNXROH-T-SS-LTB	9MP7-MANXRO-T-SS-LTB	Pages 35-47
9MP7-MPNXRO-T-SS	9MP7-MANXRO-T-SS	Pages 35-47
9MP7-MPNXRO-T-SS-LTB	9MP7-MANXRO-T-SS-LTB	Pages 35-47
9T7-MPBV-V-SS	9T7-MABV-V-SS	Page 51
12F-MAB12LPK-BN-SSP	2B12S10P12-BO	PAE Ball Valve
12F-MAB12LPK-EPR-SSP	2B12S10P12-EPR	PAE Ball Valve
12F-MAB12LPK-KZ-SSP	2B12S10P12-C	PAE Ball Valve
12F-MAB12LPK-V-SSP	2B12S10P12	PAE Ball Valve
12F-MAB6LPK-BN-SSP	2B6S10P12-BO	PAE Ball Valve
12F-MAB6LPK-EPR-SSP	2B6S10P12-EPR	PAE Ball Valve
12F-MAB6LPK-KZ-SSP	2B6S10P12-HT	PAE Ball Valve
12F-MAB6LPK-V-SSP	2B6S10P12	PAE Ball Valve
12F-MAB8LPK-BN-SSP	2B8S10P12-BO	PAE Ball Valve
12F-MAB8LPK-EPR-SSP	2B8S10P12-EPR	PAE Ball Valve
12F-MAB8LPK-KZ-SSP	2B8S10P12-HT	PAE Ball Valve
12F-MAB8LPK-V-SSP	2B8S10P12	PAE Ball Valve
12F-MAB8XPK-BN-SSP	3B8S10P12-BO	PAE Ball Valve
12F-MAB8XPKD-BN-SSP	3BD8S10P12-BO	PAE Ball Valve
12F-MAB8XPKD-EPR-SSP	3BD8S10P12-EPR	PAE Ball Valve
12F-MAB8XPKD-KZ-SSP	3BD8S10P12-C	PAE Ball Valve
12F-MAB8XPKD-V-SSP	3BD8S10P12	PAE Ball Valve
12F-MAB8XPK-EPR-SSP	3B8S10P12-EPR	PAE Ball Valve
12F-MAB8XPK-KZ-SSP	3B8S10P12-C	PAE Ball Valve
12F-MAB8XPK-V-SSP	3B8S10P12	PAE Ball Valve

MPI Part Numbers Sold Prior to July 2015 (includes Catalog 4234)	New Part Number	Additional Catalog Needed
12F-MACBL-20-SS	CPB12	PAE P Series Fitting/Tubing
12F-MACL-20-V-SS	CPO12	PAE P Series Fitting/Tubing
12F-MADBB10LPK-BN-SS	10DB10P12P4-BO	PAE Ball Valve
12F-MADBB10LPK-C-SS	10DB10P12P4-C	PAE Ball Valve
12F-MADBB10LPK-EPR-SS	10DB10P12P4-EPR	PAE Ball Valve
12F-MADBB10LPK-V-SS	10DB10P12P4	PAE Ball Valve
12F-MADBB6LPK-BN-SS	6DB10P12P4-BO	PAE Ball Valve
12F-MADBB6LPK-EPR-SS	6DB10P12P4-EPR	PAE Ball Valve
12F-MADBB6LPK-KZ-SS	6DB10P12P4-HT	PAE Ball Valve
12F-MADBB6LPK-V-SS	6DB10P12P4	PAE Ball Valve
12F-MANAB-T-SS	10P12072	PAE P Series Needle Valve
12F-MANAR-T-SS	10P12082	PAE P Series Needle Valve
12F-MANLB-T-SS	10P12071	PAE P Series Needle Valve
12F-MANLR-T-SS	10P12081	PAE P Series Needle Valve
12F-MANXBD-T-SS	10P12075	PAE P Series Needle Valve
12F-MANXBI-T-SS	10P12073	PAE P Series Needle Valve
12F-MANXBO-T-SS	10P12074	PAE P Series Needle Valve
12F-MANXRD-T-SS	10P12085	PAE P Series Needle Valve
12F-MANXRI-T-SS	10P12083	PAE P Series Needle Valve
12F-MANXRO-T-SS	10P12084	PAE P Series Needle Valve
12F-MPBLPKH-BN-SSP	2B6S10P12-BO	PAE Ball Valve
12F-MPBLPKH-EPR-SSP	2B6S10P12-EPR	PAE Ball Valve
12F-MPBLPKH-KZ-SSP	2B6S10P12-HT	PAE Ball Valve
12F-MPBLPKH-V-SSP	2B6S10P12	PAE Ball Valve
12F-MPBLPKUH-BN-SSP	2B8S10P12-BO	PAE Ball Valve
12F-MPBLPKUH-EPR-SSP	2B8S10P12-EPR	PAE Ball Valve
12F-MPBLPKUH-KZ-SSP	2B8S10P12-HT	PAE Ball Valve
12F-MPBLPKUH-V-SSP	2B8S10P12	PAE Ball Valve
12F-MPBXPKDUH-BN-SSP	3BD8S10P12-BO	PAE Ball Valve
12F-MPBXPKDUH-EPR-SSP	3BD8S10P12-EPR	PAE Ball Valve
12F-MPBXPKDUH-KZ-SSP	3BD8S10P12-C	PAE Ball Valve
12F-MPBXPKDUH-V-SSP	3BD8S10P12	PAE Ball Valve
12F-MPBXPKUH-BN-SSP	3B8S10P12-BO	PAE Ball Valve
12F-MPBXPKUH-EPR-SSP	3B8S10P12-EPR	PAE Ball Valve
12F-MPBXPKUH-KZ-SSP	3B8S10P12-C	PAE Ball Valve
12F-MPBXPKUH-V-SSP	3B8S10P12	PAE Ball Valve
12F-MPCBL-5-SS	CPB12	PAE P Series Fitting/ Tubing
12F-MPCL-5-V-SS	CPO12	PAE P Series Fitting/Tubing
12F-MPNAB-T-SS	10P12072	PAE P Series Needle Valve
12F-MPNAR-T-SS	10P12082	PAE P Series Needle Valve
12F-MPNLB-T-SS	10P12071	PAE P Series Needle Valve
12F-MPNLR-T-SS	10P12081	PAE P Series Needle Valve
12F-MPNXBD-T-SS	10P12075	PAE P Series Needle Valve
12F-MPNXBI-T-SS	10P12073	PAE P Series Needle Valve
12F-MPNXBO-T-SS	10P12074	PAE P Series Needle Valve
12F-MPNXRD-T-SS	10P12085	PAE P Series Needle Valve
12F-MPNXRI-T-SS	10P12083	PAE P Series Needle Valve
12F-MPNXRO-T-SS	10P12084	PAE P Series Needle Valve
12MP7-MABLPKPUH-BN-SSP	12MP7-MAB8LPK-BN-SSP	Pages 52-67
12MP7-MABLPKPUH-BN-SSP-LD	12MP7-MAB8LPK-BN-SSP-LD	Pages 52-67
12MP7-MABLPKPUH-KZ-SSP	12MP7-MAB8LPK-KZ-SSP	Pages 52-67
12MP7-MANABH-T-SS	12MP7-MANAB-T-SS	Pages 35-47
12MP7-MANABH-T-SS-XF	12MP7-MANAB-T-SS-XF	Pages 35-47
12MP7-MANABRH-T-SS	12MP7-MANABR-T-SS	Pages 35-47
12MP7-MANABRH-T-SS-XF	12MP7-MANABR-T-SS-XF	Pages 35-47
12MP7-MANARH-T-SS	12MP7-MANAR-T-SS	Pages 35-47
12MP7-MANARH-T-SS-XF	12MP7-MANAR-T-SS-XF	Pages 35-47
12MP7-MANARRH-T-SS	12MP7-MANARR-T-SS	Pages 35-47
12MP7-MANARRH-T-SS-XF	12MP7-MANARR-T-SS-XF	Pages 35-47
12MP7-MANLBH-T-SS	12MP7-MANLB-T-SS	Pages 35-47
12MP7-MANLBH-T-SS	12MP7-MANLB-T-SS	Pages 35-47
12MP7-MANLBH-T-SS-XF	12MP7-MANLB-T-SS-XF	Pages 35-47
12MP7-MANLRH-T-SS	12MP7-MANLR-T-SS	Pages 35-47
12MP7-MANLRH-T-SS-XF	12MP7-MANLR-T-SS-XF	Pages 35-47
12MP7-MANXBDH-T-SS	12MP7-MANXBD-T-SS	Pages 35-47
12MP7-MANXBDH-T-SS-XF	12MP7-MANXBD-T-SS-XF	Pages 35-47
12MP7-MANXBIH-T-SS	12MP7-MANXBI-T-SS	Pages 35-47
12MP7-MANXBIH-T-SS-XF	12MP7-MANXBI-T-SS-XF	Pages 35-47
12MP7-MANXBOH-T-SS	12MP7-MANXBO-T-SS	Pages 35-47
12MP7-MANXBOH-T-SS-XF	12MP7-MANXBO-T-SS-XF	Pages 35-47
12MP7-MANXRDH-T-SS	12MP7-MANXRD-T-SS	Pages 35-47
12MP7-MANXRDH-T-SS-XF	12MP7-MANXRD-T-SS-XF	Pages 35-47
12MP7-MANXRIH-T-SS	12MP7-MANXRI-T-SS	Pages 35-47
12MP7-MANXRIH-T-SS-XF	12MP7-MANXRI-T-SS-XF	Pages 35-47
12MP7-MANXROH-T-SS	12MP7-MANXRO-T-SS	Pages 35-47

Parker MPI™ Medium Pressure Products

MPI Part Numbers Sold Prior to July 2015 (includes Catalog 4234)	New Part Number	Additional Catalog Needed
12MP7-MANXROH-T-SS-XF	12MP7-MANXRO-T-SS-XF	Pages 35-47
12MP7-MPBLPKH-BN-SSP	12MP7-MAB6LPK-BN-SSP	Pages 52-69
12MP7-MPBLPKH-BN-SSP-LD	12MP7-MAB6LPK-BN-SSP-LD	Pages 52-69
12MP7-MPBLPKH-EPR-SSP	12MP7-MAB6LPK-EPR-SSP	Pages 52-69
12MP7-MPBLPKH-EPR-SSP-LD	12MP7-MAB6LPK-EPR-SSP-LD	Pages 52-69
12MP7-MPBLPKH-KZ-SSP	12MP7-MAB6LPK-KZ-SSP	Pages 52-69
12MP7-MPBLPKH-KZ-SSP-LD	12MP7-MAB6LPK-KZ-SSP-LD	Pages 52-69
12MP7-MPBLPKH-V-SSP	12MP7-MAB6LPK-V-SSP	Pages 52-69
12MP7-MPBLPKH-V-SSP-LD	12MP7-MAB6LPK-V-SSP-LD	Pages 52-69
12MP7-MPBLPKUH-BN-SSP	12MP7-MAB8LPK-BN-SSP	Pages 52-69
12MP7-MPBLPKUH-BN-SSP-LD	12MP7-MAB8LPK-BN-SSP-LD	Pages 52-69
12MP7-MPBLPKUH-EPR-SSP	12MP7-MAB8LPK-EPR-SSP	Pages 52-69
12MP7-MPBLPKUH-EPR-SSP-LD	12MP7-MAB8LPK-EPR-SSP-LD	Pages 52-69
12MP7-MPBLPKUH-KZ-SSP	12MP7-MAB8LPK-KZ-SSP	Pages 52-69
12MP7-MPBLPKUH-KZ-SSP-LD	12MP7-MAB8LPK-KZ-SSP-LD	Pages 52-69
12MP7-MPBLPKUH-V-SSP	12MP7-MAB8LPK-V-SSP	Pages 52-69
12MP7-MPBLPKUH-V-SSP-LD	12MP7-MAB8LPK-V-SSP-LD	Pages 52-69
12MP7-MPBXPKDH-BN-SSP	12MP7-MAB6XPKD-BN-SSP	Pages 52-69
12MP7-MPBXPKDH-BN-SSP-LD	12MP7-MAB6XPKD-BN-SSP-LD	Pages 52-69
12MP7-MPBXPKDH-EPR-SSP	12MP7-MAB8XPKD-EPR-SSP	Pages 52-69
12MP7-MPBXPKDH-EPR-SSP-LD	12MP7-MAB8XPKD-EPR-SSP-LD	Pages 52-69
12MP7-MPBXPKDH-KZ-SSP	12MP7-MAB8XPKD-KZ-SSP	Pages 52-69
12MP7-MPBXPKDH-KZ-SSP-LD	12MP7-MAB8XPKD-KZ-SSP-LD	Pages 52-69
12MP7-MPBXPKDH-V-SSP	12MP7-MAB6XPKD-V-SSP	Pages 52-69
12MP7-MPBXPKDH-V-SSP-LD	12MP7-MAB6XPKD-V-SSP-LD	Pages 52-69
12MP7-MPBXPKDUH-BN-SSP	12MP7-MAB8XPKD-BN-SSP	Pages 52-69
12MP7-MPBXPKDUH-EPR-SSP	12MP7-MAB8XPKD-EPR-SSP	Pages 52-69
12MP7-MPBXPKDUH-KZ-SSP	12MP7-MAB8XPKD-C-SSP	Pages 52-69
12MP7-MPBXPKDUH-V-SSP	12MP7-MAB8XPKD-V-SSP	Pages 52-69
12MP7-MPBXPKH-BN-SSP	12MP7-MAB6XPKD-BN-SSP	Pages 52-69
12MP7-MPBXPKH-EPR-SSP	12MP7-MAB6XPKD-EPR-SSP	Pages 52-69
12MP7-MPBXPKH-KZ-SSP	12MP7-MAB6XPKD-HT-SSP	Pages 52-69
12MP7-MPBXPKH-V-SSP	12MP7-MAB6XPKD-V-SSP	Pages 52-69
12MP7-MPBXPKUH-BN-SSP	12MP7-MAB8XPK-BN-SSP	Pages 52-69
12MP7-MPBXPKUH-EPR-SSP	12MP7-MAB8XPK-EPR-SSP	Pages 52-69
12MP7-MPBXPKUH-KZ-SSP	12MP7-MAB8XPK-KZ-SSP	Pages 52-69
12MP7-MPBXPKUH-V-SSP	12MP7-MAB8XPK-V-SSP	Pages 52-69
12MP7-MPCBL-5-SS	See 12MP7-MACBL-20-SS	Page 72
12MP7-MPCBL-80-SS	12MP7-MACBL-80-SS	Page 72
12MP7-MPCL-5-BN-SS	See 12MP7-MACL-20-BN-SS	Page 72
12MP7-MPCL-5-EPR-SS	See 12MP7-MACL-20-EPR-SS	Page 72
12MP7-MPCL-5-KZ-SS	See 12MP7-MACL-20-KZ-SS	Page 72
12MP7-MPCL-5-T-SS	See 12MP7-MACL-20-TO-SS	Page 72
12MP7-MPCL-5-V-SS	See 12MP7-MACL-20-V-SS	Page 72
12MP7-MPCL-80-KZ-SS	12MP7-MACL-80-KZ-SS	Page 72
12MP7-MPCL-80-T-SS	12MP7-MACL-80-TO-SS	Page 72
12MP7-MPCL-80-V-SS	12MP7-MACL-80-V-SS	Page 72
12MP7-MPFL-35-SS	12MP7-MAFCL-35-SS	Pages 70-71
12MP7-MPFL-5-SS	12MP7-MAFCL-5-SS	Pages 70-71
12MP7-MPFL-65-SS	12MP7-MAFCL-65-SS	Pages 70-71
12MP7-MPNAB-G-SS-HT	12MP7-MANAB-GY-SS-HT	Pages 35-47
12MP7-MPNABH-T-SS	12MP7-MANAB-T-SS	Pages 35-47
12MP7-MPNABH-T-SS-XF	12MP7-MANAB-T-SS-XF	Pages 35-47
12MP7-MPNABR-G-SS-HT	12MP7-MANABR-GY-SS-HT	Pages 35-47
12MP7-MPNABRH-T-SS	12MP7-MANABR-T-SS	Pages 35-47
12MP7-MPNABRH-T-SS-XF	12MP7-MANABR-T-SS-XF	Pages 35-47
12MP7-MPNABR-T-SS	12MP7-MANABR-T-SS	Pages 35-47
12MP7-MPNABR-T-SS-XF	12MP7-MANABR-T-SS-XF	Pages 35-47
12MP7-MPNAB-T-SS	12MP7-MANAB-T-SS	Pages 35-47
12MP7-MPNAB-T-SS-XF	12MP7-MANAB-T-SS-XF	Pages 35-47
12MP7-MPNAR-G-SS-HT	12MP7-MANAR-GY-SS-HT	Pages 35-47
12MP7-MPNARH-T-SS	12MP7-MANAR-T-SS	Pages 35-47
12MP7-MPNARH-T-SS-XF	12MP7-MANAR-T-SS-XF	Pages 35-47
12MP7-MPNARR-G-SS-HT	12MP7-MANARR-GY-SS-HT	Pages 35-47
12MP7-MPNARRH-T-SS	12MP7-MANARR-T-SS	Pages 35-47
12MP7-MPNARRH-T-SS-XF	12MP7-MANARR-T-SS-XF	Pages 35-47
12MP7-MPNARR-T-SS	12MP7-MANARR-T-SS	Pages 35-47
12MP7-MPNARR-T-SS-XF	12MP7-MANARR-T-SS-XF	Pages 35-47
12MP7-MPNAR-T-SS	12MP7-MANAR-T-SS	Pages 35-47
12MP7-MPNAR-T-SS-XF	12MP7-MANAR-T-SS-XF	Pages 35-47
12MP7-MPNLB-G-SS-HT	12MP7-MANLB-GY-SS-HT	Pages 35-47
12MP7-MPNLBH-T-SS	12MP7-MANLB-T-SS	Pages 35-47
12MP7-MPNLBH-T-SS-XF	12MP7-MANLB-T-SS-XF	Pages 35-47
12MP7-MPNLB-T-SS	12MP7-MANLB-T-SS	Pages 35-47
12MP7-MPNLB-T-SS-LT	12MP7-MANLB-T-SS-LTB	Pages 35-47

MPI Part Numbers Sold Prior to July 2015 (includes Catalog 4234)	New Part Number	Additional Catalog Needed
12MP7-MPNLB-T-SS-XF	12MP7-MANLB-T-SS-XF	Pages 35-47
12MP7-MPNLR-G-SS-HT	12MP7-MANLR-GY-SS-HT	Pages 35-47
12MP7-MPNLRH-T-SS	12MP7-MANLR-T-SS	Pages 35-47
12MP7-MPNLRH-T-SS-XF	12MP7-MANLR-T-SS-XF	Pages 35-47
12MP7-MPNLR-T-SS	12MP7-MANLR-T-SS	Pages 35-47
12MP7-MPNLR-T-SS-XF	12MP7-MANLR-T-SS-XF	Pages 35-47
12MP7-MPNXBD-G-SS-HT	12MP7-MANXBD-GY-SS-HT	Pages 35-47
12MP7-MPNXBDH-T-SS	12MP7-MANXBD-T-SS	Pages 35-47
12MP7-MPNXBDH-T-SS-XF	12MP7-MANXBD-T-SS-XF	Pages 35-47
12MP7-MPNXBD-T-SS	12MP7-MANXBD-T-SS	Pages 35-47
12MP7-MPNXBD-T-SS-XF	12MP7-MANXBD-T-SS-XF	Pages 35-47
12MP7-MPNXBI-G-SS-HT	12MP7-MANXBI-GY-SS-HT	Pages 35-47
12MP7-MPNXBIH-T-SS	12MP7-MANXBI-T-SS	Pages 35-47
12MP7-MPNXBIH-T-SS-XF	12MP7-MANXBI-T-SS-XF	Pages 35-47
12MP7-MPNXBI-T-SS	12MP7-MANXBI-T-SS	Pages 35-47
12MP7-MPNXBI-T-SS-XF	12MP7-MANXBI-T-SS-XF	Pages 35-47
12MP7-MPNXBO-G-SS-HT	12MP7-MANXBO-GY-SS-HT	Pages 35-47
12MP7-MPNXBOH-T-SS	12MP7-MANXBO-T-SS	Pages 35-47
12MP7-MPNXBOH-T-SS-XF	12MP7-MANXBO-T-SS-XF	Pages 35-47
12MP7-MPNXBO-T-SS	12MP7-MANXBO-T-SS	Pages 35-47
12MP7-MPNXBO-T-SS-XF	12MP7-MANXBO-T-SS-XF	Pages 35-47
12MP7-MPNXRD-G-SS-HT	12MP7-MANXRD-GY-SS-HT	Pages 35-47
12MP7-MPNXRDH-T-SS	12MP7-MANXRD-T-SS	Pages 35-47
12MP7-MPNXRDH-T-SS-XF	12MP7-MANXRD-T-SS-XF	Pages 35-47
12MP7-MPNXRD-T-SS	12MP7-MANXRD-T-SS	Pages 35-47
12MP7-MPNXRD-T-SS-XF	12MP7-MANXRD-T-SS-XF	Pages 35-47
12MP7-MPNXRI-G-SS-HT	12MP7-MANXRI-GY-SS-HT	Pages 35-47
12MP7-MPNXRIH-T-SS	12MP7-MANXRI-T-SS	Pages 35-47
12MP7-MPNXRIH-T-SS-XF	12MP7-MANXRI-T-SS-XF	Pages 35-47
12MP7-MPNXRI-T-SS	12MP7-MANXRI-T-SS	Pages 35-47
12MP7-MPNXRI-T-SS-XF	12MP7-MANXRI-T-SS-XF	Pages 35-47
12MP7-MPNXRO-G-SS-HT	12MP7-MANXRO-GY-SS-HT	Pages 35-47
12MP7-MPNXROH-T-SS	12MP7-MANXRO-T-SS	Pages 35-47
12MP7-MPNXROH-T-SS-XF	12MP7-MANXRO-T-SS-XF	Pages 35-47
12MP7-MPNXRO-T-SS	12MP7-MANXRO-T-SS	Pages 35-47
12MP7-MPNXRO-T-SS-XF	12MP7-MANXRO-T-SS-XF	Pages 35-47
16F-MAB12LPK-BN-SSP	2B12S10P16-BO	PAE Ball Valve
16F-MAB12LPK-EPR-SSP	2B12S10P16-EPR	PAE Ball Valve
16F-MAB12LPK-KZ-SSP	2B12S10P16-C	PAE Ball Valve
16F-MAB12LPK-V-SSP	2B12S10P16	PAE Ball Valve
16F-MAB8LPK-BN-SSP	2B8S10P16-BO	PAE Ball Valve
16F-MAB8LPK-EPR-SSP	2B8S10P16-EPR	PAE Ball Valve
16F-MAB8LPK-KZ-SSP	2B8S10P16-HT	PAE Ball Valve
16F-MAB8LPK-V-SSP	2B8S10P16	PAE Ball Valve
16F-MAB8XPK-BN-SSP	3B8S10P16-BO	PAE Ball Valve
16F-MAB8XPKD-BN-SSP	3BD8S10P16-BO	PAE Ball Valve
16F-MAB8XPKD-EPR-SSP	3BD8S10P16-EPR	PAE Ball Valve
16F-MAB8XPKD-KZ-SSP	3BD8S10P16-C	PAE Ball Valve
16F-MAB8XPKD-V-SSP	3BD8S10P16	PAE Ball Valve
16F-MAB8XPK-EPR-SSP	3B8S10P16-EPR	PAE Ball Valve
16F-MAB8XPK-KZ-SSP	3B8S10P16-C	PAE Ball Valve
16F-MAB8XPK-V-SSP	3B8S10P16	PAE Ball Valve
16F-MACBL-20-SS	CPB16	PAE P Series Fitting/Tubing
16F-MACL-20-V-SS	CPO16	PAE P Series Fitting/Tubing
16F-MADBB10LPK-BN-SS	10DB10P16P4-BO	PAE Ball Valve
16F-MADBB10LPK-C-SS	10DB10P16P4-C	PAE Ball Valve
16F-MADBB10LPK-EPR-SS	10DB10P16P4-EPR	PAE Ball Valve
16F-MADBB10LPK-V-SS	10DB10P16P4	PAE Ball Valve
16F-MADBB6LPK-BN-SS	6DB10P16P4-BO	PAE Ball Valve
16F-MADBB6LPK-EPR-SS	6DB10P16P4-EPR	PAE Ball Valve
16F-MADBB6LPK-KZ-SS	6DB10P16P4-HT	PAE Ball Valve
16F-MADBB6LPK-V-SS	6DB10P16P4	PAE Ball Valve
16F-MANAB-T-SS	10P16072	PAE P Series Needle Valve
16F-MANAR-T-SS	10P16082	PAE P Series Needle Valve
16F-MANLB-T-SS	10P16071	PAE P Series Needle Valve
16F-MANLR-T-SS	10P16081	PAE P Series Needle Valve
16F-MANXBD-T-SS	10P16075	PAE P Series Needle Valve
16F-MANXBI-T-SS	10P16073	PAE P Series Needle Valve
16F-MANXBO-T-SS	10P16074	PAE P Series Needle Valve
16F-MANXRD-T-SS	10P16085	PAE P Series Needle Valve
16F-MANXRI-T-SS	10P16083	PAE P Series Needle Valve
16F-MANXRO-T-SS	10P16084	PAE P Series Needle Valve
16F-MPBLPKUH-BN-SSP	2B8S10P16-BO	PAE Ball Valve
16F-MPBLPKUH-EPR-SSP	2B8S10P16-EPR	PAE Ball Valve
16F-MPBLPKUH-KZ-SSP	2B8S10P16-HT	PAE Ball Valve

Part Number Crossover Chart

MPI™ Medium Pressure Products

Parker

MPI Part Numbers Sold Prior to July 2015 (includes Catalog 4234)	New Part Number	Additional Catalog Needed
16F-MPBLPKUH-V-SSP	2B8S10P16	PAE Ball Valve
16F-MPBXPKDUH-BN-SSP	3BD8S10P16-BO	PAE Ball Valve
16F-MPBXPKDUH-EPR-SSP	3BD8S10P16-EPR	PAE Ball Valve
16F-MPBXPKDUH-KZ-SSP	3BD8S10P16-C	PAE Ball Valve
16F-MPBXPKDUH-V-SSP	3BD8S10P16	PAE Ball Valve
16F-MPBXPKUH-BN-SSP	3B8S10P16-BO	PAE Ball Valve
16F-MPBXPKUH-EPR-SSP	3B8S10P16-EPR	PAE Ball Valve
16F-MPBXPKUH-KZ-SSP	3B8S10P16-C	PAE Ball Valve
16F-MPBXPKUH-V-SSP	3B8S10P16	PAE Ball Valve
16F-MPCBL-5-SS	CPB16	PAE P Series Fitting/Tubing
16F-MPCL-5-V-SS	CPO16	PAE P Series Fitting/Tubing
16F-MPNAB-T-SS	10P16072	PAE P Series Needle Valve
16F-MPNAR-T-SS	10P16082	PAE P Series Needle Valve
16F-MPNLB-T-SS	10P16071	PAE P Series Needle Valve
16F-MPNLR-T-SS	10P16081	PAE P Series Needle Valve
16F-MPNXBD-T-SS	10P16075	PAE P Series Needle Valve
16F-MPNXBI-T-SS	10P16073	PAE P Series Needle Valve
16F-MPNXBO-T-SS	10P16074	PAE P Series Needle Valve
16F-MPNXRD-T-SS	10P16085	PAE P Series Needle Valve
16F-MPNXRI-T-SS	10P16083	PAE P Series Needle Valve
16F-MPNXRO-T-SS	10P16084	PAE P Series Needle Valve
16MP7-MABLPKPUH-BN-SSP	16MP7-MAB8LPK-BN-SSP	Pages 52-69
16MP7-MABLPKPUH-KZ-SSP	16MP7-MAB8LPK-KZ-SSP	Pages 52-69
16MP7-MANABH-T-SS	16MP7-MANAB-T-SS	Pages 35-47
16MP7-MANABRH-T-SS	16MP7-MANABR-T-SS	Pages 35-47
16MP7-MANARH-T-SS	16MP7-MANAR-T-SS	Pages 35-47
16MP7-MANARRH-T-SS	16MP7-MANARR-T-SS	Pages 35-47
16MP7-MANLBH-T-SS	16MP7-MANLB-T-SS	Pages 35-47
16MP7-MANLRH-T-SS	16MP7-MANLR-T-SS	Pages 35-47
16MP7-MANXBDH-T-SS	16MP7-MANXBD-T-SS	Pages 35-47
16MP7-MANXBIH-T-SS	16MP7-MANXBI-T-SS	Pages 35-47
16MP7-MANXBOH-T-SS	16MP7-MANXBO-T-SS	Pages 35-47
16MP7-MANXRDH-T-SS	16MP7-MANXRD-T-SS	Pages 35-47
16MP7-MANXRIH-T-SS	16MP7-MANXRI-T-SS	Pages 35-47
16MP7-MANXROH-T-SS	16MP7-MANXRO-T-SS	Pages 35-47
16MP7-MPBLPKH-BN-SSP	USE 16MP7-MAB8LPK-BN-SSP	Pages 52-69
16MP7-MPBLPKH-EPR-SSP	USE 16MP7-MAB8LPK-EPR-SSP	Pages 52-69
16MP7-MPBLPKH-KZ-SSP	USE 16MP7-MAB8LPK-KZ-SSP	Pages 52-69
16MP7-MPBLPKH-V-SSP	USE 16MP7-MAB8LPK-V-SSP	Pages 52-69
16MP7-MPBLPKH-V-SSP-LD	USE 16MP7-MAB8LPK-BN-SSP-LD	Pages 52-69
16MP7-MPBLPKUH-BN-SSP	16MP7-MAB8LPK-BN-SSP	Pages 52-69
16MP7-MPBLPKUH-BN-SSP-LD	16MP7-MAB8LPK-BN-SSP-LD	Pages 52-69
16MP7-MPBLPKUH-EPR-SSP	16MP7-MAB8LPK-EPR-SSP	Pages 52-69
16MP7-MPBLPKUH-EPR-SSP-LD	16MP7-MAB8LPK-EPR-SSP-LD	Pages 52-69
16MP7-MPBLPKUH-KZ-SSP	16MP7-MAB8LPK-KZ-SSP	Pages 52-69
16MP7-MPBLPKUH-KZ-SSP-LD	16MP7-MAB8LPK-KZ-SSP-LD	Pages 52-69
16MP7-MPBLPKUH-V-SSP	16MP7-MAB8LPK-V-SSP	Pages 52-69
16MP7-MPBLPKUH-V-SSP-LD	16MP7-MAB8LPK-V-SSP-LD	Pages 52-69
16MP7-MPBXPKDH-BN-SSP	USE 16MP7-MAB8XPKD-BN-SSP	Pages 52-69
16MP7-MPBXPKDH-EPR-SSP	USE 16MP7-MAB8XPKD-EPR-SSP	Pages 52-69
16MP7-MPBXPKDH-KZ-SSP	USE 16MP7-MAB8XPKD-KZ-SSP	Pages 52-69
16MP7-MPBXPKDH-V-SSP	USE 16MP7-MAB8XPKD-V-SSP	Pages 52-69
16MP7-MPBXPKDUH-BN-SSP	16MP7-MAB8XPKD-BN-SSP	Pages 52-69
16MP7-MPBXPKDUH-EPR-SSP	16MP7-MAB8XPKD-EPR-SSP	Pages 52-69
16MP7-MPBXPKDUH-KZ-SSP	16MP7-MAB8XPKD-C-SSP	Pages 52-69
16MP7-MPBXPKDUH-V-SSP	16MP7-MAB8XPKD-V-SSP	Pages 52-69
16MP7-MPBXPKH-BN-SSP	USE 16MP7-MAB8XPK-BN-SSP	Pages 52-69
16MP7-MPBXPKH-EPR-SSP	USE 16MP7-MAB8XPK-EPR-SSP	Pages 52-69
16MP7-MPBXPKH-KZ-SSP	USE 16MP7-MAB8XPK-KZ-SSP	Pages 52-69
16MP7-MPBXPKH-V-SSP	USE 16MP7-MAB8XPK-V-SSP	Pages 52-69
16MP7-MPBXPKH-V-SSP-LD	USE 16MP7-MAB8XPK-V-SSP-LD	Pages 52-69
16MP7-MPBXPKUH-BN-SSP	16MP7-MAB8XPK-BN-SSP	Pages 52-69
16MP7-MPBXPKUH-EPR-SSP	16MP7-MAB8XPK-EPR-SSP	Pages 52-69
16MP7-MPBXPKUH-KZ-SSP	16MP7-MAB8XPK-C-SSP	Pages 52-69
16MP7-MPBXPKUH-V-SSP	16MP7-MAB8XPK-V-SSP	Pages 52-69
16MP7-MPCBL-5-SS	See 16MP7-MACBL-20-SS	Page 72
16MP7-MPCBL-80-SS	16MP7-MACBL-80-SS	Page 72
16MP7-MPCL-5-BN-SS	See 16MP7-MACL-20-BN-SS	Page 72
16MP7-MPCL-5-KZ-SS	See 16MP7-MACL-20-KZ-SS	Page 72
16MP7-MPCL-5-V-SS	See 16MP7-MACL-20-V-SS	Page 72
16MP7-MPCL-80-KZ-SS	16MP7-MACL-80-KZ-SS	Page 72
16MP7-MPFL-35-SS	16MP7-MAFCL-35-SS	Pages 70-71
16MP7-MPFL-5-SS	16MP7-MAFCL-5-SS	Pages 70-71
16MP7-MPFL-65-SS	16MP7-MAFCL-65-SS	Pages 70-71

MPI Part Numbers Sold Prior to July 2015 (includes Catalog 4234)	New Part Number	Additional Catalog Needed
16MP7-MPNAB-G-SS-HT	16MP7-MANAB-GY-SS-HT	Pages 35-47
16MP7-MPNABH-T-SS	16MP7-MANAB-T-SS	Pages 35-47
16MP7-MPNABR-G-SS-HT	16MP7-MANABR-GY-SS-HT	Pages 35-47
16MP7-MPNABRH-T-SS	16MP7-MANABR-T-SS	Pages 35-47
16MP7-MPNABR-T-SS	16MP7-MANABR-T-SS	Pages 35-47
16MP7-MPNAB-T-SS	16MP7-MANAB-T-SS	Pages 35-47
16MP7-MPNAR-G-SS-HT	16MP7-MANAR-GY-SS-HT	Pages 35-47
16MP7-MPNARH-T-SS	16MP7-MANAR-T-SS	Pages 35-47
16MP7-MPNARR-G-SS-HT	16MP7-MANARR-GY-SS-HT	Pages 35-47
16MP7-MPNARRH-T-SS	16MP7-MANARR-T-SS	Pages 35-47
16MP7-MPNARR-T-SS	16MP7-MANARR-T-SS	Pages 35-47
16MP7-MPNAR-T-SS	16MP7-MANAR-T-SS	Pages 35-47
16MP7-MPNLB-G-SS-HT	16MP7-MANLB-GY-SS-HT	Pages 35-47
16MP7-MPNLBH-T-SS	16MP7-MANLB-T-SS	Pages 35-47
16MP7-MPNLB-T-SS	16MP7-MANLB-T-SS	Pages 35-47
16MP7-MPNLR-G-SS-HT	16MP7-MANLR-GY-SS-HT	Pages 35-47
16MP7-MPNLRH-T-SS	16MP7-MANLR-T-SS	Pages 35-47
16MP7-MPNLR-T-SS	16MP7-MANLR-T-SS	Pages 35-47
16MP7-MPNXBD-G-SS-HT	16MP7-MANXBD-GY-SS-HT	Pages 35-47
16MP7-MPNXBDH-T-SS	16MP7-MANXBD-T-SS	Pages 35-47
16MP7-MPNXBD-T-SS	16MP7-MANXBD-T-SS	Pages 35-47
16MP7-MPNXBI-G-SS-HT	16MP7-MANXBI-GY-SS-HT	Pages 35-47
16MP7-MPNXBIH-T-SS	16MP7-MANXBI-T-SS	Pages 35-47
16MP7-MPNXBI-T-SS	16MP7-MANXBI-T-SS	Pages 35-47
16MP7-MPNXBO-G-SS-HT	16MP7-MANXBO-GY-SS-HT	Pages 35-47
16MP7-MPNXBOH-T-SS	16MP7-MANXBO-T-SS	Pages 35-47
16MP7-MPNXBO-T-SS	16MP7-MANXBO-T-SS	Pages 35-47
16MP7-MPNXRD-G-SS-HT	16MP7-MANXRD-GY-SS-HT	Pages 35-47
16MP7-MPNXRDH-T-SS	16MP7-MANXRD-T-SS	Pages 35-47
16MP7-MPNXRD-T-SS	16MP7-MANXRD-T-SS	Pages 35-47
16MP7-MPNXRI-G-SS-HT	16MP7-MANXRI-GY-SS-HT	Pages 35-47
16MP7-MPNXRIH-T-SS	16MP7-MANXRI-T-SS	Pages 35-47
16MP7-MPNXRI-T-SS	16MP7-MANXRI-T-SS	Pages 35-47
16MP7-MPNXRO-G-SS-HT	16MP7-MANXRO-GY-SS-HT	Pages 35-47
16MP7-MPNXROH-T-SS	16MP7-MANXRO-T-SS	Pages 35-47
16MP7-MPNXRO-T-SS	16MP7-MANXRO-T-SS	Pages 35-47

MPI™ Medium Pressure Products

Terms of Sale with Warranty Limitations

The items described in this document and other documents and descriptions provided by Parker Hannifin Corporation, its subsidiaries and its authorized distributors ("Seller") are hereby offered for sale at prices to be established by Seller. This offer and its acceptance by any customer ("Buyer") shall be governed by all of the following Terms and Conditions. Buyer's order for any item described in its document, when communicated to Seller verbally, or in writing, shall constitute acceptance of this offer. All goods or work described will be referred to as "Products".

1. Terms and Conditions. Seller's willingness to offer Products, or accept an order for Products, to or from Buyer is expressly conditioned on Buyer's assent to these Terms and Conditions and to the terms and conditions found on-line at www.parker.com/saleterms/. Seller objects to any contrary or additional term or condition of Buyer's order or any other document issued by Buyer.

2. Price Adjustments; Payments. Prices stated on the reverse side or preceding pages of this document are valid for 30 days. After 30 days, Seller may change prices to reflect any increase in its costs resulting from state, federal or local legislation, price increases from its suppliers, or any change in the rate, charge, or classification of any carrier. The prices stated on the reverse or preceding pages of this document do not include any sales, use, or other taxes unless so stated specifically. Unless otherwise specified by Seller, all prices are F.O.B. Seller's facility, and payment is due 30 days from the date of invoice. After 30 days, Buyer shall pay interest on any unpaid invoices at the rate of 1.5% per month or the maximum allowable rate under applicable law.

3. Delivery Dates; Title and Risk; Shipment. All delivery dates are approximate and Seller shall not be responsible for any damages resulting from any delay. Regardless of the manner of shipment, title to any products and risk of loss or damage shall pass to Buyer upon tender to the carrier at Seller's facility (i.e., when it's on the truck, it's yours). Unless otherwise stated, Seller may exercise its judgment in choosing the carrier and means of delivery. No deferment of shipment at Buyers' request beyond the respective dates indicated will be made except on terms that will indemnify, defend and hold Seller harmless against all loss and additional expense. Buyer shall be responsible for any additional shipping charges incurred by Seller due to Buyer's changes in shipping, product specifications or in accordance with Section 13, herein.

4. Warranty. Seller warrants that the Products sold hereunder shall be free from defects in material or workmanship for a period of twelve months from the date of delivery to Buyer or 2,000 hours of normal use, whichever occurs first. This warranty is made only to Buyer and does not extend to anyone to whom Products are sold after purchased from Seller. The prices charged for Seller's products are based upon the exclusive limited warranty stated above, and upon the following disclaimer: DISCLAIMER OF WARRANTY: THIS WARRANTY COMPRISES THE SOLE AND ENTIRE WARRANTY PERTAINING TO PRODUCTS PROVIDED HEREUNDER. SELLER DISCLAIMS ALL OTHER WARRANTIES, EXPRESS AND IMPLIED, INCLUDING MERCHANTABILITY AND FITNESS FOR A PARTICULAR PURPOSE.

5. Claims; Commencement of Actions. Buyer shall promptly inspect all Products upon delivery. No claims for shortages will be allowed unless reported to the Seller within 10 days of delivery. No other claims against Seller will be allowed unless asserted in writing within 60 days after delivery or, in the case of an alleged breach of warranty, within 30 days after the date within the warranty period on which the defect is or should have been discovered by Buyer. Any action based upon breach of this agreement or upon any other claim arising out of this sale (other than an action by Seller for any amount due to Seller from Buyer) must be commenced within thirteen months from the date of tender of delivery by Seller or, for a cause of action based upon an alleged breach of warranty, within thirteen months from the date within the warranty period on which the defect is or should have been discovered by Buyer.

6. LIMITATION OF LIABILITY. UPON NOTIFICATION, SELLER WILL, AT ITS OPTION, REPAIR OR REPLACE A DEFECTIVE PRODUCT, OR REFUND THE PURCHASE PRICE. IN NO EVENT SHALL SELLER BE LIABLE TO BUYER FOR ANY SPECIAL, INDIRECT, INCIDENTAL OR CONSEQUENTIAL DAMAGES ARISING OUT OF, OR AS THE RESULT OF, THE SALE, DELIVERY, NON-DELIVERY, SERVICING, USE OR LOSS OF USE OF THE PRODUCTS OR ANY PART THEREOF, OR FOR ANY CHARGES OR EXPENSES OF ANY NATURE INCURRED WITHOUT SELLER'S WRITTEN CONSENT, EVEN IF SELLER HAS BEEN NEGLIGENT, WHETHER IN CONTRACT, TORT OR OTHER LEGAL THEORY. IN NO EVENT SHALL SELLER'S LIABILITY UNDER ANY CLAIM MADE BY BUYER EXCEED THE PURCHASE PRICE OF THE PRODUCTS.

7. Contingencies. Seller shall not be liable for any default or delay in performance if caused by circumstances beyond the reasonable control of Seller.

8. User Responsibility. The user, through its own analysis and testing, is solely responsible for making the final selection of the system and Product and assuring that all performance, endurance, maintenance, safety and warning requirements of the application are met. The user must analyze all aspects of the application and follow applicable industry standards and Product information. If Seller provides Product or system options, the user is responsible for determining that such data and specifications are suitable and sufficient for all applications and reasonably foreseeable uses of the Products or systems.

9. Loss to Buyer's Property. Any designs, tools, patterns, materials, drawings, confidential information or equipment furnished by Buyer or any other items which become Buyer's property, may be considered obsolete and may be destroyed by Seller after two consecutive years have elapsed without Buyer placing an order for the items which are manufactured using such property. Seller shall not be responsible for any loss or damage to such property while it is in Seller's possession or control.

10. Special Tooling. A tooling charge may be imposed for any special tooling, including without limitation, dies, fixtures, molds and patterns, acquired to manufacture Products.

Tel: +45 63 12 83 00 | Email: ps@hymatik.com | www.hymatik.com | Hvidkaervej 27a, DK-5250 Odense SV, Denmark

Such special tooling shall be and remain Seller's property notwithstanding payment of any charges by Buyer. In no event will Buyer acquire any interest in apparatus belonging to Seller which is utilized in the manufacture of the Products, even if such apparatus has been specially converted or adapted for such manufacture and notwithstanding any charges paid by Buyer. Unless otherwise agreed, Seller shall have the right to alter, discard or otherwise dispose of any special tooling or other property in its sole discretion at any time.

11. Buyer's Obligation; Rights of Seller. To secure payment of all sums due or otherwise, Seller shall retain a security interest in the goods delivered and this agreement shall be deemed a Security Agreement under the Uniform Commercial Code. Buyer authorizes Seller as its attorney to execute and file on Buyer's behalf all documents Seller deems necessary to perfect its security interest. Seller shall have a security interest in, and lien upon, any property of Buyer in Seller's possession as security for the payment of any amounts owed to Seller by Buyer.

12. Improper use and Indemnity. Buyer shall indemnify, defend, and hold Seller harmless from any claim, liability, damages, lawsuits, and costs (including attorney fees), whether for personal injury, property damage, patent, trademark or copyright infringement or any other claim, brought by or incurred by Buyer, Buyer's employees, or any other person, arising out of: (a) improper selection, improper application or other misuse of Products purchased by Buyer from Seller; (b) any act or omission, negligent or otherwise, of Buyer; (c) Seller's use of patterns, plans, drawings, or specifications furnished by Buyer to manufacture Product; or (d) Buyer's failure to comply with these terms and conditions. Seller shall not indemnify Buyer under any circumstance except as otherwise provided.

13. Cancellations and Changes. Orders shall not be subject to cancellation or change by Buyer for any reason, except with Seller's written consent and upon terms that will indemnify, defend and hold Seller harmless against all direct, incidental and consequential loss or damage. Seller may change product features, specifications, designs and availability with notice to Buyer.

14. Limitation on Assignment. Buyer may not assign its rights or obligations under this agreement without the prior written consent of Seller.

15. Entire Agreement. This agreement contains the entire agreement between the Buyer and Seller and constitutes the final, complete and exclusive expression of the terms of the agreement. All prior or contemporaneous written or oral agreements or negotiations with respect to the subject matter are herein merged.

16. Waiver and Severability. Failure to enforce any provision of this agreement will not waive that provision nor will any such failure prejudice Seller's right to enforce that provision in the future. Invalidation of any provision of this agreement by legislation or other rule of law shall not invalidate any other provision herein. The remaining provisions of this agreement will remain in full force and effect.

17. Termination. This agreement may be terminated by Seller for any reason and at any time by giving Buyer thirty (30) days written notice of termination. In addition, Seller may by written notice immediately terminate this agreement for the following: (a) Buyer commits a breach of any provision of this agreement (b) the appointment of a trustee, receiver or custodian for all or any part of Buyer's property (c) the filing of a petition for relief in bankruptcy of the other Party on its own behalf, or by a third party (d) an assignment for the benefit of creditors, or (e) the dissolution or liquidation of the Buyer.

18. Governing Law. This agreement and the sale and delivery of all Products hereunder shall be deemed to have taken place in and shall be governed and construed in accordance with the laws of the State of Ohio, as applicable to contracts executed and wholly performed therein and without regard to conflicts of laws principles. Buyer irrevocably agrees and consents to the exclusive jurisdiction and venue of the courts of Cuyahoga County, Ohio with respect to any dispute, controversy or claim arising out of or relating to this agreement. Disputes between the parties shall not be settled by arbitration unless, after a dispute has arisen, both parties expressly agree in writing to arbitrate the dispute.

19. Indemnity for Infringement of Intellectual Property Rights. Seller shall have no liability for infringement of any patents, trademarks, copyrights, trade dress, trade secrets or similar rights except as provided in this Section. Seller will defend and indemnify Buyer against allegations of infringement of U.S. patents, U.S. trademarks, copyrights, trade dress and trade secrets ("Intellectual Property Rights"). Seller will defend at its expense and will pay the cost of any settlement or damages awarded in an action brought against Buyer based on an allegation that a Product sold pursuant to this Agreement infringes the Intellectual Property Rights of a third party. Seller's obligation to defend and indemnify Buyer is contingent on Buyer notifying Seller within ten (10) days after Buyer becomes aware of such allegations of infringement, and Seller having sole control over the defense of any allegations or actions including all negotiations for settlement or compromise. If a Product is subject to a claim that it infringes the Intellectual Property Rights of a third party, Seller may, at its sole expense and option, procure for Buyer the right to continue using the Product, replace or modify the Product so as to make it noninfringing, or offer to accept return of the Product and return the purchase price less a reasonable allowance for depreciation. Notwithstanding the foregoing, Seller shall have no liability for claims of infringement based on information provided by Buyer, or directed to Products delivered hereunder for which the designs are specified in whole or part by Buyer, or infringements resulting from the modification, combination or use in a system of any Product sold hereunder. The foregoing provisions of this Section shall constitute Seller's sole and exclusive liability and Buyer's sole and exclusive remedy for infringement of Intellectual Property Rights.

20. Taxes. Unless otherwise indicated, all prices and charges are exclusive of excise, sales, use, property, occupational or like taxes which may be imposed by any taxing authority upon the manufacture, sale or delivery of Products.

21. Equal Opportunity Clause. For the performance of government contracts and where dollar value of the Products exceed $10,000, the equal employment opportunity clauses in Executive Order 11246, VEVRAA, and 41 C.F.R. §§ 60-1.4(a), 60-741.5(a), and 60-250.4, are hereby incorporated.

Parker Worldwide

AE – UAE, Dubai
Tel: +971 4 8875600
parker.me@parker.com

AR – Argentina, Buenos Aires
Tel: +54 3327 44 4129
falecom@parker.com

AT – Austria, Wiener Neustadt
Tel: +43 (0)2622 23501-0
parker.austria@parker.com

AT – Eastern Europe, Wiener Neustadt
Tel: +43 (0)2622 23501 970
parker.easteurope@parker.com

AU – Australia, Dandenong
Tel: +61 (0)3 9768 5555
customer.service.au@parker.com

AZ – Azerbaijan, Baku
Tel: +994 50 2233 458
parker.azerbaijan@parker.com

BE/LX – Belgium, Nivelles
Tel: +32 (0)67 280 900
parker.belgium@parker.com

BR – Brazil, Sao Jose dos Campos
Tel: +55 12 4009 3504
falecom@parker.com

BY – Belarus, Minsk
Tel: +375 17 209 9399
parker.belarus@parker.com

CA – Canada, Grimsby, Ontario
Tel +1 905-945-2274
ipd_canada@parker.com

CH – Switzerland, Etoy
Tel: +41 (0) 21 821 02 30
parker.switzerland@parker.com

CL – Chile, Santiago
Tel: +56 (0) 2 2303 9640
falecom@parker.com

CN – China, Shanghai
Tel: +86 21 2899 5000
INGtechnical.china@parker.com

CZ – Czech Republic, Klecany
Tel: +420 284 083 111
parker.czechrepublic@parker.com

DE – Germany, Kaarst
Tel: +49 (0)2131 4016 0
parker.germany@parker.com

DK – Denmark, Ballerup
Tel: +45 43 56 04 00
parker.denmark@parker.com

ES – Spain, Madrid
Tel: +34 902 33 00 01
parker.spain@parker.com

FI – Finland, Vantaa
Tel: +358 (0)20 753 2500
parker.finland@parker.com

FR – France, Contamine s/Arve
Tel: +33 (0)4 50 25 80 25
parker.france@parker.com

GR – Greece, Athens
Tel: +30 210 933 6450
parker.greece@parker.com

HU – Hungary, Budapest
Tel: +36 1 220 4155
parker.hungary@parker.com

ID – Indonesia, Tangerang
Tel: +62 (0)21 7588 1906
parker.id@parker.com

IE – Ireland, Dublin
Tel: +353 (0)1 466 6370
parker.ireland@parker.com

IN – India, Mumbai
Tel: +91 22 6513 7081-85

IT – Italy, Corsico (MI)
Tel: +39 02 45 19 21
parker.italy@parker.com

JP – Japan, Tokyo
Tel: +(81) 3 6408 3900
infophj@parker.com

KR – South Korea, Seoul
Tel: +82 2 559 0400
parkerkr@parker.com

KZ – Kazakhstan, Almaty
Tel: +7 7272 505 800
parker.easteurope@parker.com

LV – Latvia, Riga
Tel: +371 6 745 2601
parker.latvia@parker.com

MX – Mexico, Toluca
Tel: +52 722 275 4200
contacto@parker.com

MY – Malaysia, Selangor
Tel: +603 784 90 800
parkermy@parker.com

NL – The Netherlands, Oldenzaal
Tel: +31 (0)541 585 000
parker.nl@parker.com

NO – Norway, Stavanger
Tel: +47 (0)51 826 300
parker.norway@parker.com

NZ – New Zealand, Mt Wellington
Tel: +64 9 574 1744

PL – Poland, Warsaw
Tel: +48 (0)22 573 24 00
parker.poland@parker.com

PT – Portugal, Leca da Palmeira
Tel: +351 22 999 7360
parker.portugal@parker.com

RO – Romania, Bucharest
Tel: +40 21 252 1382
parker.romania@parker.com

RU – Russia, Moscow
Tel: +7 495 645-2156
parker.russia@parker.com

SE – Sweden, Spånga
Tel: +46 (0)8 59 79 50 00
parker.sweden@parker.com

SG – Singapore,
Tel: +65 6887 6300
parkersg@parker.com

SK – Slovakia, Banská Bystrica
Tel: +421 484 162 252
parker.slovakia@parker.com

SL – Slovenia, Novo Mesto
Tel: +386 7 337 6650
parker.slovenia@parker.com

TH – Thailand, Bangkok
Tel: +66 2 186 7000
phthailand@parker.com

TR – Turkey, Istanbul
Tel: +90 216 4997081
parker.turkey@parker.com

TW – Taiwan, Taipei
Tel: +886 2 2298 8987
enquiry.taiwan@parker.com

UA – Ukraine, Kiev
Tel: +380 44 494 2731
parker.ukraine@parker.com

UK – United Kingdom, Warwick
Tel: +44 (0)1926 317878
parker.uk@parker.com

USA – IPD, Huntsville
Tel: +1 256 881 2040
ipdcct@parker.com

USA – Autoclave Engineers, Erie
Tel: +1 814 860 5700
ipdaecct@parker.com

VN – Vietnam, Hochi Minh City
Tel: +84 (0)8337 546 51
parker_viet@parker.com

ZA – South Africa, Kempton Park
Tel: +27 (0)11 961 0700
parker.southafrica@parker.com

WARNING

FAILURE, IMPROPER SELECTION OR IMPROPER USE OF THE PRODUCTS AND/OR SYSTEMS DESCRIBED HEREIN OR RELATED ITEMS CAN CAUSE DEATH, PERSONAL INJURY AND PROPERTY DAMAGE.

This document and other information from Parker Hannifin Corporation, its subsidiaries and authorized distributors provide product and/or system options for further investigation by users having technical expertise. It is important that you analyze all aspects of your application and review the information concerning the product or system in the current product catalog. Due to the variety of operating conditions and applications for these products or systems, the user, through its own analysis and testing, is solely responsible for making the final selection of the products and systems and assuring that all performance, safety and warning requirements of the application are met. The products described herein, including without limitation, product features, specifications, designs, availability and pricing, are subject to change by Parker Hannifin Corporation and its subsidiaries at any time without notice.

Offer of Sale

The items described in this document are available for sale by Parker Hannifin Corporation, its subsidiaries or its authorized distributors. Any sale contract entered by Parker will be governed by the provisions stated in Parker's standard terms and conditions of sale (copy available upon request).

© 2018 Parker Hannifin Corporation. All Rights Reserved.

Catalog 4234-MA January 2018

Parker Hannifin Corporation
Instrumentation Products Division
1005 A Cleaner Way
Huntsville, AL 35805
United States of America
phone 256 881 2040
fax 256 881 5072
www.parker.com/ipdus

Riverside Road, Pottington Business Park
Barnstaple, Devon, EX31 1NP
United Kingdom
phone +44 (0) 1271 313131
fax +44 (0) 1271 373636