



aerospace
climate control
electromechanical
filtration
fluid & gas handling
hydraulics
pneumatics
process control
sealing & shielding





VP04
Remote Control
Pneumatic Proportional Remote Control Valve



Parker

ENGINEERING YOUR SUCCESS.

Catalogue layout

This catalogue has been designed to give a brief overview of the VP04, and to make it easy for you to study and choose from the different options available, so that we may customize your remote control valve in accordance with your wishes. In addition to general information and basic technical data, the brochure therefore contains descriptions of the options available for the valve. Each function area is given as a subheading, e.g. **Connections**, followed by a brief description. This is followed by a series of coded options, e.g. **M, S, P** together with a brief description of what each code represents.

How to order your valve

To specify your valve, simply choose the options you require and enter the corresponding code into the appropriate box in the Order code on page 4.

When all the order code boxes are completed, please check the list on page 5 if it exists a part number for your code.

Should you require assistance completing the order code or if your code does not exist, please do not hesitate to contact your nearest Parker Hannifin representative.

The information from your order code is then entered into our computerized valve specification program, which initiates the assembly process and generates a unique product ID number that is subsequently stamped into the data plate on your valve, or if you have completed an order code this will be stamped into the plate. Your valve specifications remain on our database to facilitate subsequent re-ordering or servicing of your valve.

Early consultation with Parker Hannifin saves time and money

Our experienced engineers have in-depth knowledge of the different types of hydraulic system and the ways in which they work. They are at your disposal to offer qualified advice on the best system for the desired combination of functions, control characteristics and economic demands. By consulting Parker early in the project planning stage, you are assured of a comprehensive hydraulic system that gives your machine the best possible operating and control characteristics.

Conversion factors

1 kg	= 2.2046 lb
1 N	= 0.22481 lbf
1 bar	= 14.504 psi
1 l	= 0.21997 UK gallon
1 l	= 0.26417 US gallon
1 cm^3	= 0.061024 in^3
1 m	= 3.2808 feet
1 mm	= 0.03937 in
9/5 °C + 32 = °F	

Parker reserves the right to modify products without prior notice. Typical curves and diagrams are used in this catalogue. Even though the catalogue is revised and updated continuously, there is always the possibility of errors. For more detailed information about the products, please contact Parker Hannifin.

⚠ WARNING – USER RESPONSIBILITY

FAILURE OR IMPROPER SELECTION OR IMPROPER USE OF THE PRODUCTS DESCRIBED HEREIN OR RELATED ITEMS CAN CAUSE DEATH, PERSONAL INJURY AND PROPERTY DAMAGE.

This document and other information from Parker-Hannifin Corporation, its subsidiaries and authorized distributors provide product or system options for further investigation by users having technical expertise.

The user, through its own analysis and testing, is solely responsible for making the final selection of the system and components and assuring that all performance, endurance, maintenance, safety and warning requirements of the application are met. The user must analyze all aspects of the application, follow applicable industry standards, and follow the information concerning the product in the current product catalog and in any other materials provided from Parker or its subsidiaries or authorized distributors.

To the extent that Parker or its subsidiaries or authorized distributors provide component or system options based upon data or specifications provided by the user, the user is responsible for determining that such data and specifications are suitable and sufficient for all applications and reasonably foreseeable uses of the components or systems.

Offer of Sale

Please contact your Parker representation for a detailed ”Offer of Sale”.

Parker Hannifin
Mobile Controls Division Europe
Borås, Sweden

Tel: +45 63 12 83 00 | Email: ps@hymatik.com | www.hymatik.com | Hvidkaervej 27a, DK-5250 Odense SV, Denmark

List of contents

Page

Catalogue Information 2
Conversion factors 2
General Information 4
Order code 4-5
Technical Data 6
Electrical data 7
Breaking capacity 7
Connections 7
Weight 7
Control-pressure characteristic 7
Circuit 7
Control-pressure ports 8
Connection options 8
Lever options 8
Control-pressure options 9
Lever detent options 9
Dimensional drawings 10-11

Parker Hannifin
Mobile Controls Division Europe
Borås, Sweden

Tel: +45 63 12 83 00 | Email: ps@hymatik.com | www.hymatik.com | Hvidkaervej 27a, DK-5250 Odense SV, Denmark

General

The VP04 is a stackable, pneumatic control-pressure valve intended for the proportional, pneumatic remote control of directional valves, positioning cylinders etc. It can be supplied with a coordinate lever (joystick) or different linear levers.

Freedom in machine design

Good machine design is heavily dependent on the availability of flexible components and systems that can be combined in different ways to give optimum operating and control characteristics. Parker Hannifin control systems give you the freedom to design your machines the way you want them, since they themselves are designed to enable components such as directional valves and other control devices to be located ideally on the machine. This gives advantages in production too, since it greatly facilitates the building of machine subassemblies at different sites prior to collation for final assembly.

Moreover, the wide range of Parker Hannifin pneumatic, hydraulic and electric control devices enables optimum design of the machine-control station in terms of ergonomics. (Please see separate brochures for information about our hydraulic and electric remote-control systems.)

Safety

In spite of the sophistication of the final functions it may serve, the VP04 remote control valve is of robust and simple construction. This greatly facilitates training and servicing which, together with predictable control characteristics and great dependability, does much to improve the operational safety of the machine.

Design

The valve is made up of sections, each of which contains two 3-way pressure reducing valves (one per signal port). Up to 8 sections can be stacked together to give a total of 16 signal ports. The valve can be equipped with either one linear lever per section, or with a coordinate lever (joystick) when two sections are stacked to give four signal ports.

Essential characteristics

- Low, well adapted operating forces and short lever strokes give good operator comfort.
- Small dimensions enable simple, compact installation.
- Push-in couplings enable fast, simple connection.
- Low hysteresis ensures consistent pressure output value for a given lever stroke.
- Simple design makes the valve easy to service.
- Quality materials and great precision in manufacturing, assembly and testing assure you of a quality product with low internal leakage and long service life.
- Wide range of control devices and accessories gives great flexibility in system design.
- Total compatibility with Parker Hannifin directional valves gives predictable and harmonious system characteristics.

Order code

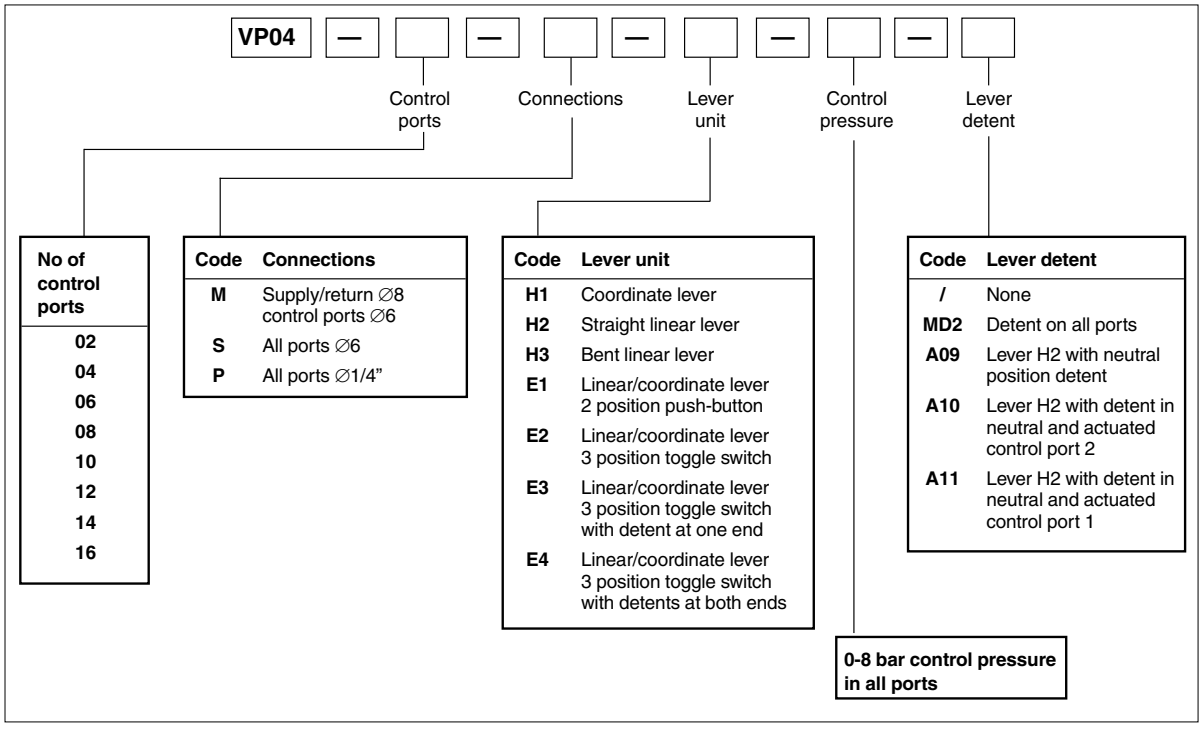

See page 8 – 9 for further description of different options.

Parker Hannifin
Mobile Controls Division Europe
Borås, Sweden

Tel: +45 63 12 83 00 | Email: ps@hymatik.com | www.hymatik.com | Hvidkaervej 27a, DK-5250 Odense SV, Denmark

How to order your valve

To specify your valve, simply choose the options you require and enter the corresponding code into the appropriate box in the Order code above.

When all the order code boxes are completed, please check the list below if it exists a part number for your code.

Should you require assistance completing the order code or if your code does not exist, please do not hesitate to contact your nearest Parker Hannifin representative.

VP04 Joystick

Code	Specification number	Part number
VP04-4-M-H1-8-/	VP04-4-3742	20079096
VP04-4-M-E1-8-/	VP04-4-3744	20079092
VP04-4-M-E2-8-/	VP04-0007	20004538
VP04-4-M-E3-8-/	VP04-4-3745	20079094
VP04-4-M-E4-8-/	VP04-4-3713	20078929
VP04-4-S-H1-8-/	VP04-4-3035	20075063
VP04-4-S-E1-8-/	VP04-4-3036	20079093
VP04-4-S-E2-8-/	VP04-4-3037	20079304
VP04-4-S-E3-8-/	VP04-4-3598	20078161
VP04-4-S-E4-8-/	VP04-4-3743	20079095
VP04-4-P-H1-8-/	VP04-0639	20012700
VP04-4-P-E1-8-/	VP04-4-3746	20079091
VP04-4-P-E2-8-/	VP04-4-2539	20070819
VP04-4-P-E3-8-/	VP04-4-3527	20077306
VP04-4-P-E4-8-/	VP04-4-3739	20079071

VP04 Linear lever

Code	Specification number	Part number
VP04-2-M-H2-8-/	VP04-0001	8234971607
VP04-2-M-H3-8-/	VP04-0585	20008037
VP04-2-M-E1-8-/	VP04-2-3451	20076974
VP04-2-M-E2-8-/	VP04-2-3747	20079090
VP04-2-M-E3-8-/	VP04-2-3748	20079089
VP04-2-M-E4-8-/	VP04-2-3712	20078930
VP04-2-M-A09-8-/	VP04-2-3871	20079750
VP04-2-M-H2-8-MD2	VP04-2-3724	20078973
VP04-2-M-E4-8-MD2	VP04-2-3714	20078941
VP04-2-S-H2-8-/	VP04-2-3032	20077533
VP04-2-S-H3-8-/	VP04-2-3033	20075936
VP04-2-S-E1-8-/	VP04-2-3073	20074877
VP04-2-S-E2-8-/	VP04-2-3388	20076728
VP04-2-S-E3-8-/	VP04-2-3577	20078093
VP04-2-S-E4-8-/	VP04-2-3771	20079305
VP04-2-S-A09-8-/	VP04-2-3721	20078950
VP04-2-S-A10-8-/	VP04-2-3034	20078925
VP04-2-S-H2-8-MD2	VP04-2-3720	20078951
VP04-2-P-X-8-/	VP04-0640	20012701
VP04-2-P-H2-8-/	VP04-2-3737	20079073
VP04-2-P-H3-8-/	VP04-0579	20007541
VP04-2-P-E1-8-/	VP04-2-3540	20077473
VP04-2-P-E2-8-/	VP04-2-3716	20078943
VP04-2-P-E3-8-/	VP04-2-3749	20079306
VP04-2-P-E4-8-/	VP04-2-3738	20079072
VP04-2-P-H2-8-MD2	VP04-2-3782	20079124
VP04-2-P-A09-8-/	VP04-2-3375	20077163
VP04-2-P-E1-8-MD2	VP04-2-3649	20078509
VP04-4-M-H2-8-/	VP04-4-3501	20079307
VP04-4-M-H3-8/	VP04-4-2745	20072188
VP04-4-S-H2-8-/	VP04-4-3251	20079308
VP04-4-S-H3-8/	VP04-4-3750	20079309
VP04-4-S-H2-8-MD2	VP04-4-3790	20079181
VP04-4-P-H2-8-/	VP04-4-2733	20079007
VP04-4-P-H3-8/	VP04-4-3751	20079310
VP04-6-M-H2-8-/	VP04-6-3752	20079583
VP04-6-M-H3-8-/	VP04-6-3753	20079584
VP04-6-S-H2-8-/	VP04-6-3754	20079585
VP04-6-S-H3-8-/	VP04-6-3755	20079586
VP04-6-S-H2-8-MD2	VP04-6-3791	20079180
VP04-6-P-H2-8-/	VP04-6-2536	20071515
VP04-6-P-H3-8-/	VP04-6-3756	20079587
VP04-8-M-H2-8-/	VP04-8-3502	20079588
VP04-8-M-H3-8-/	VP04-8-3757	20079589
VP04-8-S-H2-8-/	VP04-8-3758	20079590
VP04-8-S-H3-8-/	VP04-8-3759	20079591
VP04-8-S-H2-8-/-MD2	VP04-8-3792	20079179
VP04-8-P-H2-8-/	VP04-8-3760	20079592
VP04-8-P-H3-8-/	VP04-8-3333	20076474
VP04-10-M-H2-8-/	VP04-10-3761	20079593
VP04-10-M-H3-8-/	VP04-10-3762	20079594
VP04-10-S-H2-8-/	VP04-10-3536	20077385
VP04-10-S-H3-8-/	VP04-10-3763	20079595
VP04-10-P-H2-8-/	VP04-10-3764	20079596
VP04-10-P-H3-8-/	VP04-10-3765	20079597
VP04-12-M-H2-8-/	VP04-12-3185	20075705
VP04-12-M-H3-8-/	VP04-12-3766	20079598
VP04-12-S-H2-8-/	VP04-12-3767	20079599
VP04-12-S-H3-8-/	VP04-12-3768	20079600
VP04-12-S-H3-8-MD2	VP04-12-3245	20076001
VP04-12-P-H2-8-/	VP04-12-3769	20079601
VP04-12-P-H3-8-/	VP04-12-3770	20079602
VP04-14-M-H2-8-/	VP04-14-3772	20079603
VP04-14-M-H3-8-/	VP04-14-3773	20079604
VP04-14-S-H2-8-/	VP04-14-3774	20079605
VP04-14-S-H3-8-/	VP04-14-2793	20072465
VP04-14-P-H2-8-/	VP04-14-3775	20079606
VP04-14-P-H3-8-/	VP04-14-3776	20079607

Parker Hannifin
Mobile Controls Division Europe
Borås, Sweden

Tel: +45 63 12 83 00 | Email: ps@hymatik.com | www.hymatik.com | Hvidkaervej 27a, DK-5250 Odense SV, Denmark

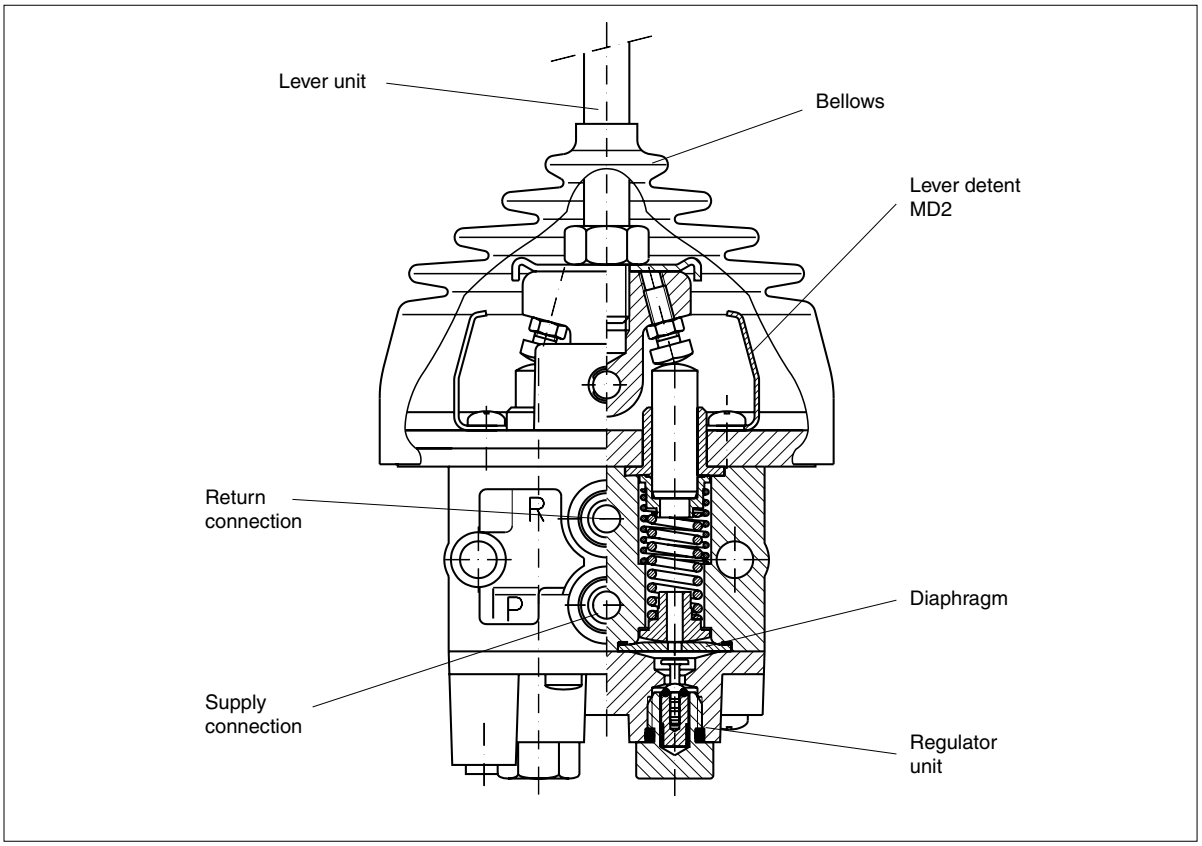

Pressure

Supply pressure (at least 2 bar higher than max. control pressure)	max. 10 bar (145 psi)
Control pressure	max. 8 bar (116 psi)

Volume rate of flow

Control flow at Δp = 6 bar (87 psi)	7 Nl/s (14.8 cfm free flow)

Hysteresis

Hysteresis	max. 1 bar (14.5 psi)

Temperature

Min. ambient temperature	-30 °C (86 °F) (assuming dry air or use of agent to reduce freezing-point).
Max. ambient temperature	+70 °C (158 °F)

Air quality

The air quality determines the service life of the valve.
See ISO 8573.

Filter

Filtration	max. 20 µm or better

Lever forces

Normal force for linear lever	
fully actuated	3.1 Nm (2.29 lbf·ft)
Normal force for coordinate lever	
one function fully actuated	3.9 Nm (2.88 lbf·ft)
two functions fully actuated	5.5 Nm (4.06 lbf·ft)

Warning

If the filtration demands are not met, the valve poppet can jam in the open position, with the result that the valve remains actuated. It is not possible to force back a jammed poppet mechanically.

Parker Hannifin
Mobile Controls Division Europe
Borås, Sweden

Tel: +45 63 12 83 00 | Email: ps@hymatik.com | www.hymatik.com | Hvidkaervej 27a, DK-5250 Odense SV, Denmark

Electrical data

Concerns switch in E-type levers.
Data given below is what is needed to obtain maximum service life. The values can be exceeded with retained function, but will result in a reduction in service life. In the event of inductive loading, a protective diode must be fitted.

Breaking capacity

DC, resistive loading	2A/24V
DC or AC, inductive loading	1A/24V

Connections

All connections are equipped with push-in connectors and are available for different pipe dimensions.

Signal ports are available with connections for ∅6 mm or ∅1/4" pipe. Supply and return ports are available with connections for ∅6 mm, ∅8 mm or ∅1/4" pipe.

Weight

The weight of the unit varies somewhat, depending on configuration.

Linear lever approx.	0.8 kg/section (1.76 lb)
Coordinate lever	approx. 1.7 kg (3.75 lb)

Control-pressure characteristic

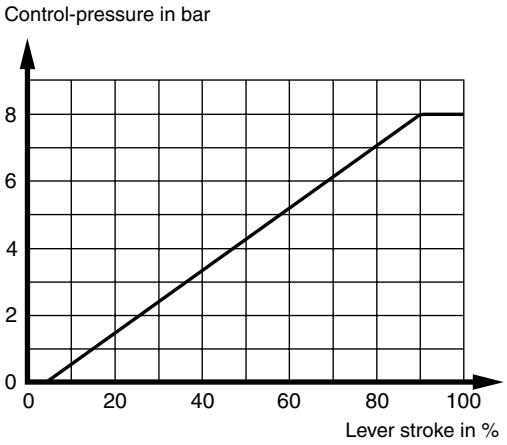

Diagram showing control-pressure characteristic of the VP04-valve. Valid for 8 - 10 bar supply pressure. If lower the curve will level out at obtained supply pressure.

Circuit

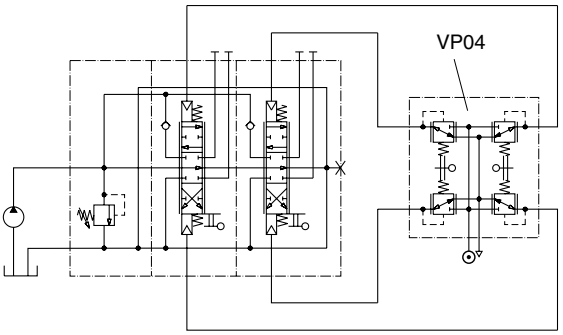

Circuit diagram showing two-section VP04 with two linear levers controlling one hydraulic directional valve with two spool sections.

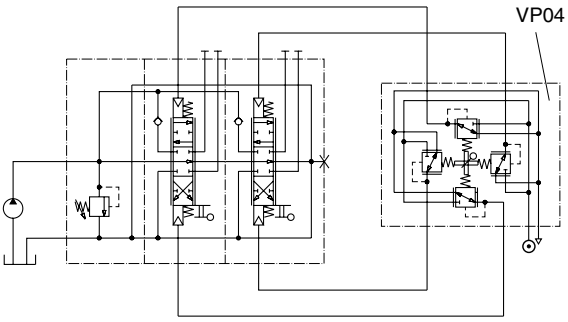

Circuit diagram showing two-section VPO4 with one coordinate lever (joystick) controlling one hydraulic directional valve with two spool sections.

Parker Hannifin
Mobile Controls Division Europe
Borås, Sweden

Tel: +45 63 12 83 00 | Email: ps@hymatik.com | www.hymatik.com | Hvidkaervej 27a, DK-5250 Odense SV, Denmark

Every valve is customized. The following options are used to configure a valve.

Control-pressure ports [1]

2-16 Each valve section contains two control-pressure ports. Two valve sections are needed for coordinate levers (joysticks), since they require 4 control-pressure ports.

Connection options [2]

M For ∅8 mm pipe in supply and return ports, and ∅6 mm pipe in the control-pressure ports.

S For ∅6 mm pipe in all ports.

P For ∅1/4" pipe in all ports.

Lever options [3]

Lever units are available in several different versions. For coordinate movements (4 control-pressure ports), the H1, E1, E2, E3 and E4 units can be used.

For linear movements (2 control-pressure ports), the H2, H3, E1, E2, E3 and E4 units can be used. Owing to the width of the lever unit, only E-levers can be used for valves containing two control-pressure ports. E-levers contain a switch that can be used for different external functions.

H1 Coordinate lever (joystick) with ball.

H2 Straight linear lever with ball.

H3 Bent linear lever with ball.

E1 Linear or coordinate lever (joystick) with 2-position push-button switch.

E2 Linear or coordinate lever (joystick) with 3-position, spring-centred toggle switch.

E3 Linear or coordinate lever (joystick) with 3-position toggle switch with detent at one end position.

E4 Linear or coordinate lever (joystick) with 3-position toggle switch with detents at both end positions.

A28 Linear lever with 5 instantaneous switches and the cable is equipped with a Deutsch connector DT04-6P.

E1

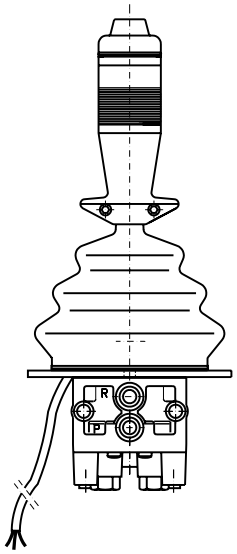

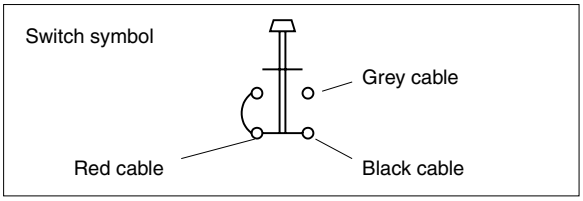

E2, E3, E4

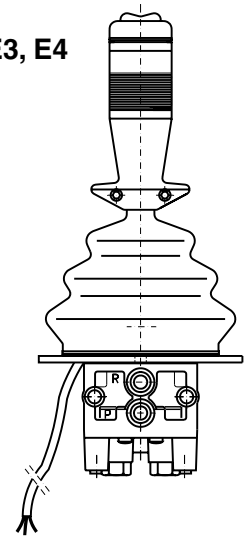

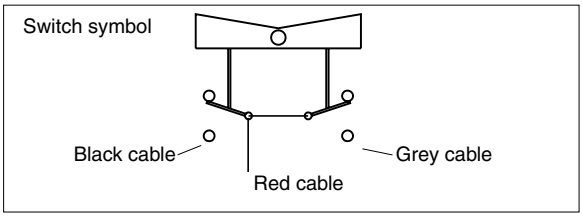

Parker Hannifin
Mobile Controls Division Europe
Borås, Sweden

Tel: +45 63 12 83 00 | Email: ps@hymatik.com | www.hymatik.com | Hvidkaervej 27a, DK-5250 Odense SV, Denmark

Control-pressure options [4]

The control-pressure curve is proportional to the lever stroke. For maximum signal pressure to be obtained, the supply pressure must be at least 2 bar higher than the maximum control pressure.

8 Max. actuation gives a 8 bar control-pressure signal.

A24 Max. actuation gives a 7 bar control-pressure signal.

Lever detent options [5]

MD2 Detent for linear levers that locks the lever in the fully actuated position. The lever is moved out of the detented position by pulling it to release the detent.

A09 Detent for H2 lever that locks the lever in the neutral position. To move the lever out of neutral, the detent must be disengaged by lifting with the fingers.

A10 Same as A09, but locks the lever in the neutral position and in one fully actuated position (port 2).

A11 Same as A09, but locks the lever in the neutral position and in one fully actuated position (port 1).

A28

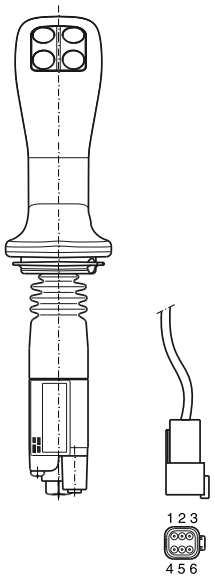

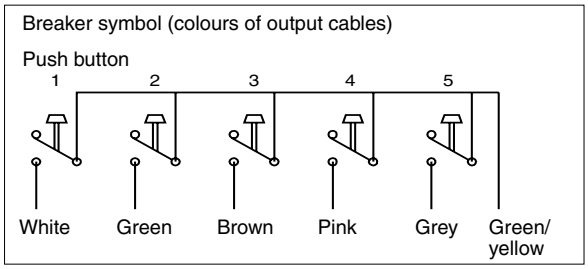

Parker Hannifin
Mobile Controls Division Europe
Borås, Sweden

Tel: +45 63 12 83 00 | Email: ps@hymatik.com | www.hymatik.com | Hvidkaervej 27a, DK-5250 Odense SV, Denmark

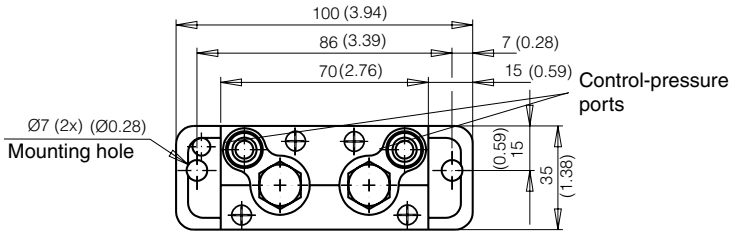

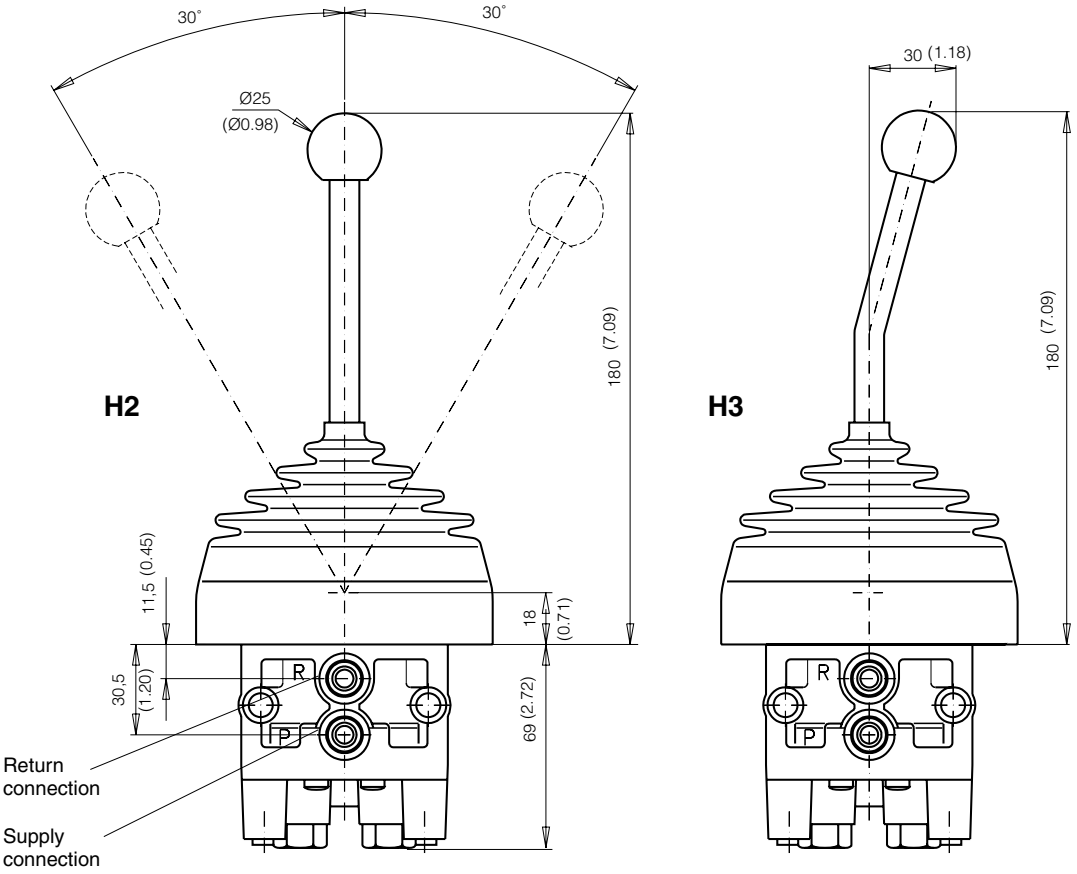

Parker Hannifin
Mobile Controls Division Europe
Borås, Sweden

Tel: +45 63 12 83 00 | Email: ps@hymatik.com | www.hymatik.com | Hvidkaervej 27a, DK-5250 Odense SV, Denmark

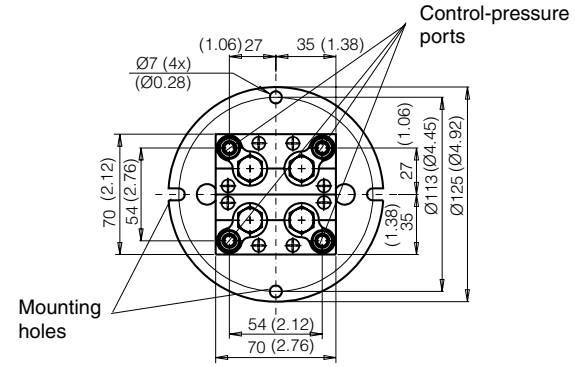

H1

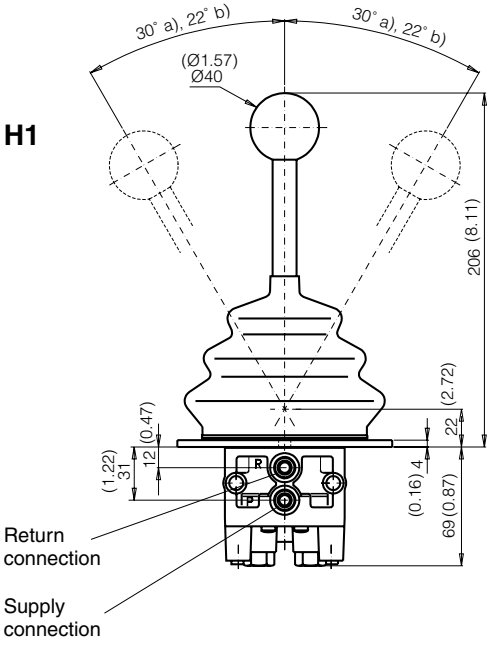

a) Applies to max. actuation of two function.
b) Applies to max. actuation of one functions.

E1

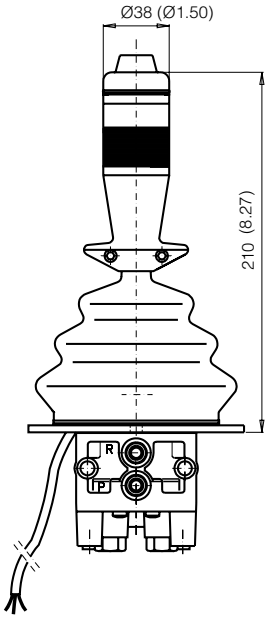

E2, E3, E4

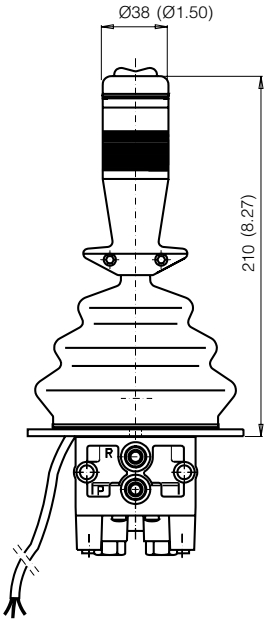

Parker Hannifin
Mobile Controls Division Europe
Borås, Sweden

Parker Worldwide

Europe, Middle East, Africa

AE – United Arab Emirates,
Dubai
Tel: +971 4 8127100
parker.me@parker.com

AT – Austria, Wiener Neustadt
Tel: +43 (0)2622 23501-0
parker.austria@parker.com

AT – Eastern Europe, Wiener Neustadt
Tel: +43 (0)2622 23501 900
parker.easteurope@parker.com

AZ – Azerbaijan, Baku
Tel: +994 50 2233 458
parker.azerbaijan@parker.com

BE/LU – Belgium, Nivelles
Tel: +32 (0)67 280 900
parker.belgium@parker.com

BY – Belarus, Minsk
Tel: +375 17 209 9399
parker.belarus@parker.com

CH – Switzerland, Etoy
Tel: +41 (0)21 821 87 00
parker.switzerland@parker.com

CZ – Czech Republic, Klecany
Tel: +420 284 083 111
parker.czechrepublic@parker.com

DE – Germany, Kaarst
Tel: +49 (0)2131 4016 0
parker.germany@parker.com

DK – Denmark, Ballerup
Tel: +45 43 56 04 00
parker.denmark@parker.com

ES – Spain, Madrid
Tel: +34 902 330 001
parker.spain@parker.com

FI – Finland, Vantaa
Tel: +358 (0)20 753 2500
parker.finland@parker.com

FR – France, Contamine s/Arve
Tel: +33 (0)4 50 25 80 25
parker.france@parker.com

GR – Greece, Athens
Tel: +30 210 933 6450
parker.greece@parker.com

HU – Hungary, Budapest
Tel: +36 1 220 4155
parker.hungary@parker.com

IE – Ireland, Dublin
Tel: +353 (0)1 466 6370
parker.ireland@parker.com

IT – Italy, Corsico (MI)
Tel: +39 02 45 19 21
parker.italy@parker.com

KZ – Kazakhstan, Almaty
Tel: +7 7272 505 800
parker.easteurope@parker.com

NL – The Netherlands, Oldenzaal
Tel: +31 (0)541 585 000
parker.nl@parker.com

NO – Norway, Asker
Tel: +47 66 75 34 00
parker.norway@parker.com

PL – Poland, Warsaw
Tel: +48 (0)22 573 24 00
parker.poland@parker.com

PT – Portugal, Leca da Palmeira
Tel: +351 22 999 7360
parker.portugal@parker.com

RO – Romania, Bucharest
Tel: +40 21 252 1382
parker.romania@parker.com

RU – Russia, Moscow
Tel: +7 495 645-2156
parker.russia@parker.com

SE – Sweden, Spånga
Tel: +46 (0)8 59 79 50 00
parker.sweden@parker.com

SK – Slovakia, Banská Bystrica
Tel: +421 484 162 252
parker.slovakia@parker.com

SL – Slovenia, Novo Mesto
Tel: +386 7 337 6650
parker.slovenia@parker.com

TR – Turkey, Istanbul
Tel: +90 216 4997081
parker.turkey@parker.com

UA – Ukraine, Kiev
Tel +380 44 494 2731
parker.ukraine@parker.com

UK – United Kingdom, Warwick
Tel: +44 (0)1926 317 878
parker.uk@parker.com

ZA – South Africa, Kempton Park
Tel: +27 (0)11 961 0700
parker.southafrica@parker.com

North America

CA – Canada, Milton, Ontario
Tel: +1 905 693 3000

US – USA, Cleveland
(industrial)
Tel: +1 216 896 3000

US – USA, Elk Grove Village
(mobile)
Tel: +1 847 258 6200

Asia Pacific

AU – Australia, Castle Hill
Tel: +61 (0)2-9634 7777

CN – China, Shanghai
Tel: +86 21 2899 5000

HK – Hong Kong
Tel: +852 2428 8008

IN – India, Mumbai
Tel: +91 22 6513 7081-85

JP – Japan, Fujisawa
Tel: +81 (0)4 6635 3050

KR – South Korea, Seoul
Tel: +82 2 559 0400

MY – Malaysia, Shah Alam
Tel: +60 3 7849 0800

NZ – New Zealand, Mt Wellington
Tel: +64 9 574 1744

SG – Singapore
Tel: +65 6887 6300

TH – Thailand, Bangkok
Tel: +662 717 8140

TW – Taiwan, Taipei
Tel: +886 2 2298 8987

South America

AR – Argentina, Buenos Aires
Tel: +54 3327 44 4129

BR – Brazil, Cachoeirinha RS
Tel: +55 51 3470 9144

CL – Chile, Santiago
Tel: +56 2 623 1216

MX – Mexico, Apodaca
Tel: +52 81 8156 6000

Ed. 2011-03-23

© 2011 Parker Hannifin Corporation. All rights reserved.

Catalogue HY17-8356/UK, POD, 04/2011, ZZ

EMEA Product Information Centre
Free phone: 00 800 27 27 5374
(from AT, BE, CH, CZ, DE, DK, EE, ES, FI, FR, IE, IL, IS, IT, LU, MT, NL, NO, PL, PT, RU, SE, SK, UK, ZA)

US Product Information Centre
Toll-free number: 1-800-27 27 537

www.parker.com

Your local authorized Parker distributor