hymatik





aerospace
climate control
electromechanical
filtration
fluid & gas handling
hydraulics
pneumatics
process control
sealing & shielding

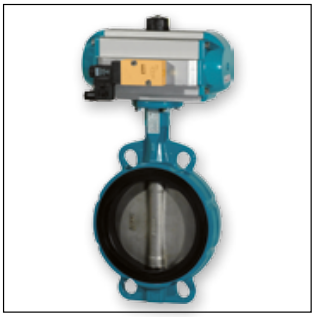

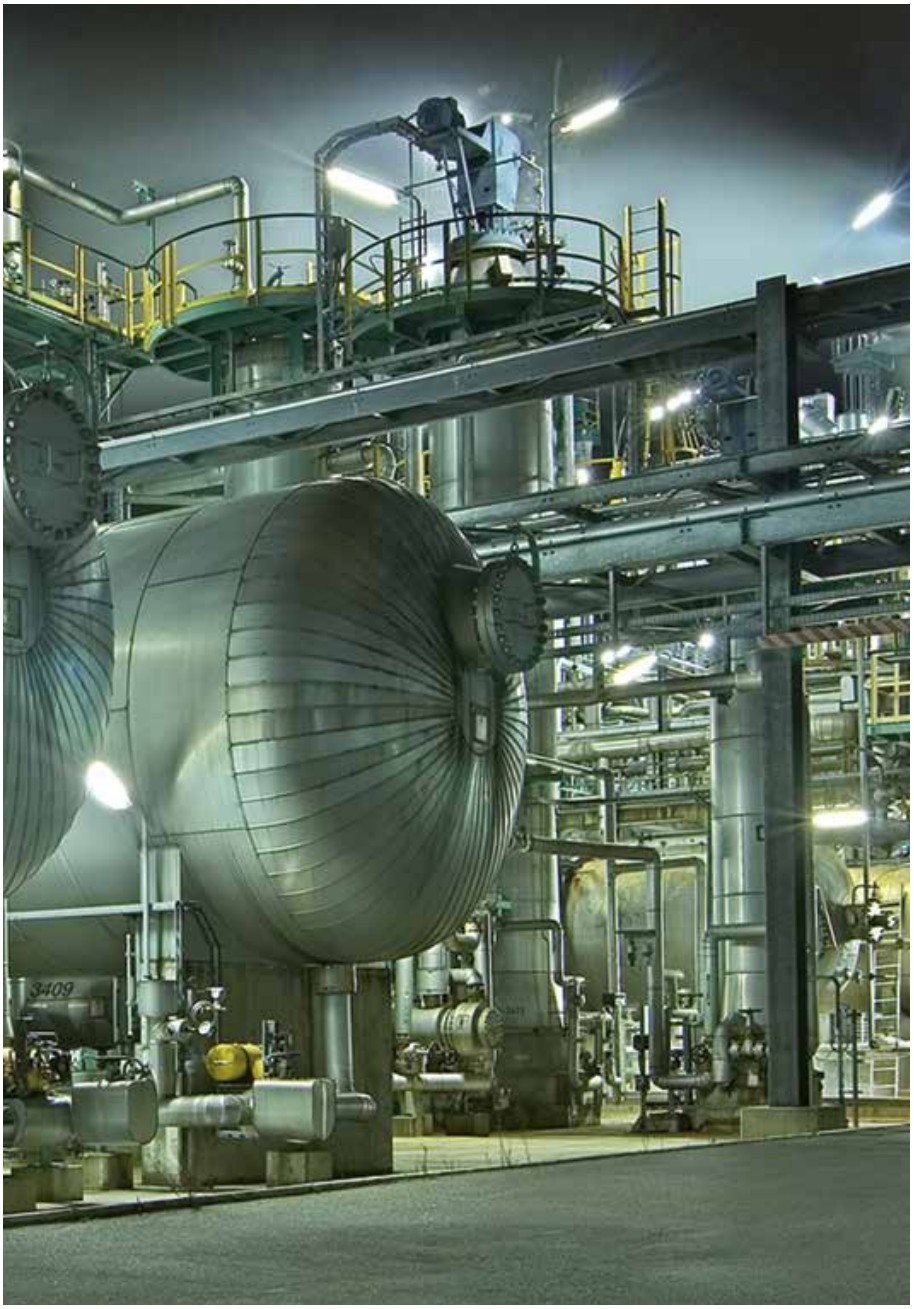

High Flow Valve Actuation Range

NAMUR Valves G1/4" & G1/2"
Piped Valves G1/4" & G1/2"
Banjo Valves G1/8" & G1/4"

for Control of Pneumatic Actuators



Parker

ENGINEERING YOUR SUCCESS.

Tel: +45 63 12 83 00 | Email: ps@hymatik.com | www.hymatik.com | Hvidkaervej 27a, DK-5250 Odense SV, Denmark

Market Description







Process industries
Chemical, Petrochemical industries
Oil & Gas
Water & Sewage
Pulp & Paper
Food & Beverage
Pharmaceutical industry
Powder Dosing-Transportation
Air Dryers

Description of Applications

Control of single or double acting pneumatic actuators, in safe or dangerous areas.

NAMUR Interfaces 1/4" & 1/2"

The interface design is conform to the NAMUR standard and to the VDI/VDE 3845 recommendations of the actuator industry. It allows a compact design of the actuator/valve unit. In case of a 3/2 function, the air of the actuator spring chamber also flows through the pilot valve (re-breather function). This prevents corrosion of the actuator springs.

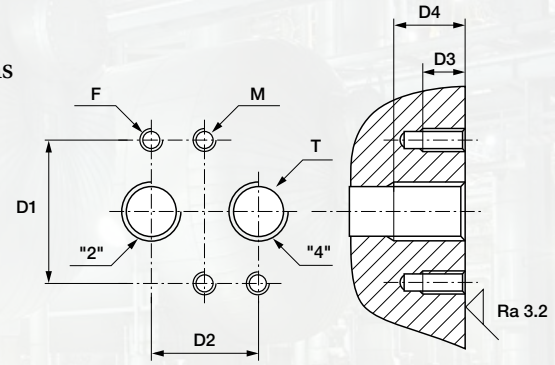

F	T	D1 mm	D2 mm	D3 mm	D4 min. mm	M mm
M5	1/4	32	24	8	12	M5
M6	1/2	45	40	10	16	M6

F: 2 mounting holes - **T:** 2 actuators control port - **M:** 2 holes for dowel pins

Tel: +45 63 12 83 00 | Email: ps@hymatik.com | www.hymatik.com | Hvidkaervej 27a, DK-5250 Odense SV, Denmark

Customer Value Proposition



- High flow: 1.250 l/min (1/4"), 3.000 l/min (1/2")
- Compact design
- Long life expectancy
- Coil Modularity: a large part of the range is compatible with different types of coils, ATEX, non ATEX and Low Power
- Fail safe standard
- Reduced inventory (3/2 & 5/2 functions with the same valve on 341Nx5 series)
- Mechanical part of the valve ATEX certified according standard EN 13463-1 & -5 (with maximum capability of zone 1-21)

General Information

Function:	3/2, 5/2, 3/2 <=> 5/2 and 5/3 valves.
Manual override:	Standard on all versions.
Design:	Nxx & Pxx Series: Solenoid operated spool valve with combined spring and air return & external air pressure operated versions. B0x Series: Solenoid direct acting valve with spring return.
Mounting:	Nxx Series: For direct mounting on NAMUR interface 1/4" & 1/2" Pxx Series: Piped valves G1/4" & G1/2" Bxx Series: Equipped with a banjo bolt G1/8" or G1/4"
Mounting position:	Indifferent.
Material specifications:	Aluminium body. Internal parts of stainless steel. Sealing material from NBR.
Range of admissible pressure drop:	Δp min. = see table. Δp max. = 10 bar.
Media:	Dry or lubricated air.
Fluid temperature:	-20°C to +50°C
Ambient temperature:	-20°C to +50°C
Electrical part:	N0x / P0x / Bxx series are compatible with coils 496131 / 496482 / 496637 N3x / P3x series are compatible with coils part of electrical group 2.0 (8/9W), including 481865 / 495870 / 495905 N3x90 series are compatible with coils from electrical group 6.0,7.0,8.0 including 495900,495910,483580.01. N3x96/97 series are compatible with coils from electrical group 6.0 & 8.0 including 482740, 496125, 495910, 495900.
Solenoid duty:	100% ED.
Voltage:	From 12 VDC to 48 VDC From 24 VAC to 230 VAC
Voltage tolerance:	See coil specification
Class of insulation material:	Class F or H
Standards:	Mechanical ATEX conform to EN 13463-1 & -5.

Tel: +45 63 12 83 00 | Email: ps@hymatik.com | www.hymatik.com | Hvidkaervej 27a, DK-5250 Odense SV, Denmark

NAMUR Valves G1/4" Series

Solenoid Operated Versions
N03-N05 Series

Port size	Orifice	Q_N	Admissible differential pressure (bar) maximum			Fluid Temperature		Seat disc	Reference number				Atex Zone	Consumption Power (Watt)		Weight (g)	Elect. Group	Dim. Ref.
									Valve		Housing	Coil						
G	mm	l/min	min	DC=	AC~	Min °C	Max °C		without man. over.	with man. over.				DC=	AC~			
3/2 Solenoid operated Combined spring & air return (monostable)																		
1/4	7	1250	2.5	10	10	-20	50	NBR		**331N03**	-	496131	-	3	3	300	1.2	1
1/4	7	1250	2.5	10	10	-20	50	NBR		**331N03**	-	496482	-	3	3	300	1.2	1
1/4	7	1250	2.5	10	10	-20	50	NBR		**331N03**	-	496637	2-22	3	3	300	1.2	1
5/2 Solenoid operated Combined spring & air return (monostable)																		
1/4	7	1250	2.5	10	10	-20	50	NBR		**341N03**	-	496131	-	3	3	300	1.2	2
1/4	7	1250	2.5	10	10	-20	50	NBR		**341N03**	-	496482	-	3	3	300	1.2	2
1/4	7	1250	2.5	10	10	-20	50	NBR		**341N03**	-	496637	2-22	3	3	300	1.2	2
3/2 <=> 5/2 with conversion plate - Solenoid operated Combined spring & air return (monostable)																		
1/4	7	1250	2.5	10	10	-20	50	NBR	**341N0502**	**341N05**	-	496131	-	3	3	310	1.2	3
1/4	7	1250	2.5	10	10	-20	50	NBR	**341N0502**	**341N05**	-	496482	-	3	3	310	1.2	3
1/4	7	1250	2.5	10	10	-20	50	NBR	**341N0502**	**341N05**	-	496637	2-22	3	3	310	1.2	3
5/2 Solenoid operated and return (bistable)																		
1/4	7	1250	2.5	10	10	-20	50	NBR		**347N03**	-	496131	-	3	3	430	1.2	4
1/4	7	1250	2.5	10	10	-20	50	NBR		**347N03**	-	496482	-	3	3	430	1.2	4
1/4	7	1250	2.5	10	10	-20	50	NBR		**347N03**	-	496637	2-22	3	3	430	1.2	4
5/3 W1 closed in center position Solenoid operated and return																		
1/4	7	1250	2.5	10	10	-20	50	NBR		**342N03**	-	496131	-	3	3	430	1.2	4
1/4	7	1250	2.5	10	10	-20	50	NBR		**342N03**	-	496482	-	3	3	430	1.2	4
1/4	7	1250	2.5	10	10	-20	50	NBR		**342N03**	-	496637	2-22	3	3	430	1.2	4
5/3 W3 exhausted in center position Solenoid operated and return																		
1/4	7	1250	2.5	10	10	-20	50	NBR		**343N03**	-	496131	-	3	3	430	1.2	4

Please consult the "How to Order" part at the end of each coil chapter.

Tel: +45 63 12 83 00 | Email: ps@hymatik.com | www.hymatik.com | Hvidkaervej 27a, DK-5250 Odense SV, Denmark

Dimensions Reference 1

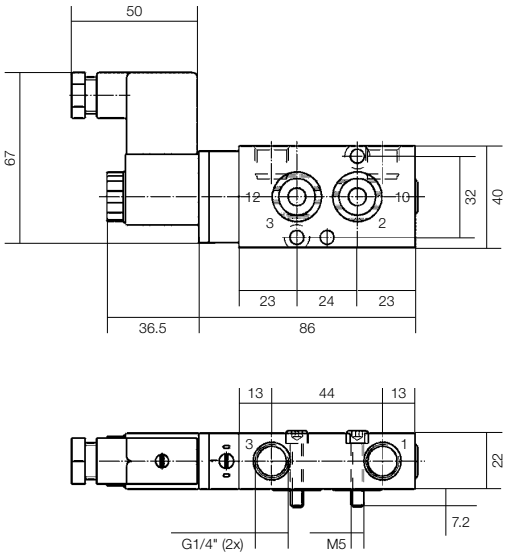

Dimensions Reference 2

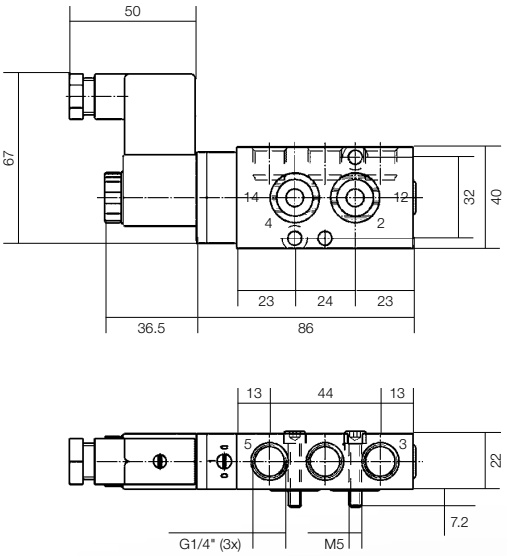

Dimensions Reference 3

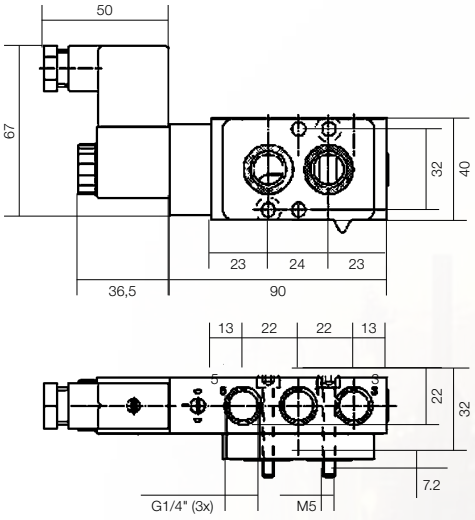

Dimensions Reference 4

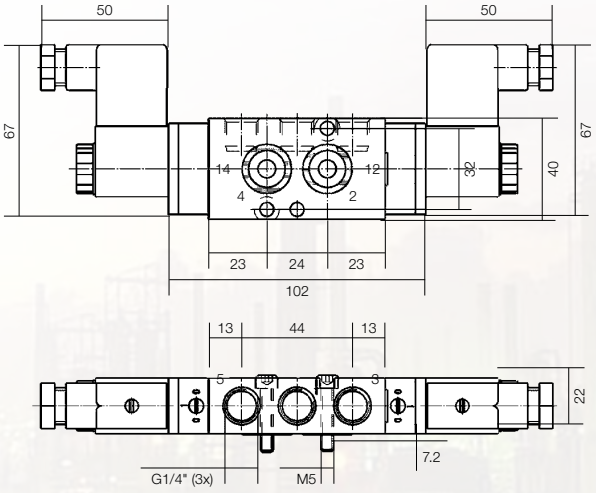

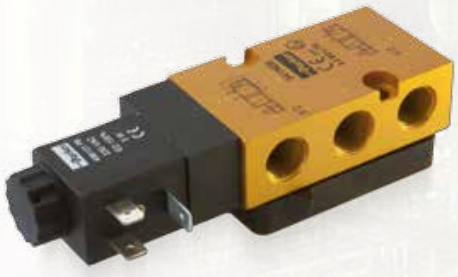

Tel: +45 63 12 83 00 | Email: ps@hymatik.com | www.hymatik.com | Hvidkaervej 27a, DK-5250 Odense SV, Denmark

NAMUR Valves G1/4" Series

Solenoid Operated Versions
N33-N35 Series

3/2 <=>5/2 with conversion plate - Solenoid operated
Combined spring & air return (monostable)

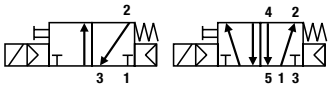

Port size	Orifice	Q_N	Admissible differential pressure (bar) maximum			Fluid Temperature		Seat disc	Reference number				Atex Zone	Consumption Power (Watt)		Weight (g)	Elect. Group	Dim. Ref.
									Valve		Housing	Coil						
G	mm	l/min	min	DC=	AC~	Min °C	Max °C		without man. over.	with man. over.				DC=	AC~			
1/4	7	1250	2.5	10	10	-20	50	NBR	**341N3502**	**341N35**	**2995**	481865	-	9	8	480	2.0	5
1/4	7	1250	2.5	10	10	-20	50	NBR	**341N3502**	**341N35**	**2995**	495870	2-22	9	8	500	2.0	5
1/4	7	1250	2.5	10	10	-20	50	NBR	**341N3502**	**341N35**	-	495905	1-21	8	8	740	2.0	-
1/4	7	1250	2.5	10	-	-20	50	NBR	**341N3590**		**-**	483580.01	1-21	0.5-3	-	560	7.0	5
1/4	7	1250	2.5	10	-	-20	50	NBR	**341N3590**		**-**	495910	1-21	0.3-3	-	920	8.0	-
1/4	7	1250	2.5	10	10	-20	50	NBR	**341N3590**		-	495900	1-21	2	2,5	920	6.0	-
1/4	7	1250	2.5	10	-	-20	50	NBR	**341N3596**	**341N3597**	**2995**	482740	-	1,6	-	480	6.0	5
1/4	7	1250	2.5	10	-	-20	50	NBR	**341N3596**	**341N3597**	**2995**	496125	2-22	1,6	-	500	6.0	5
1/4	7	1250	2.5	10	-	-20	50	NBR	**341N3596**	**341N3597**	**-**	495910	1-21	0.3-3	-	920	8.0	-
1/4	7	1250	2.5	10	10	-20	50	NBR	**341N3596**	**341N3597**	-	495900	1-21	2	2,5	920	6.0	-

5/2 Solenoid operated and return

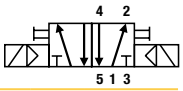

1/4	7	1250	2.5	10	10	-20	50	NBR		**347N33**	**2995**	481865	-	9	8	750	2.0	6
1/4	7	1250	2.5	10	10	-20	50	NBR		**347N33**	**2995**	495870	2-22	9	8	790	2.0	6
1/4	7	1250	2.5	10	10	-20	50	NBR		**347N33**	-	495905	1-21	8	8	1270	2.0	-
1/4	7	1250	2.5	10	-	-20	50	NBR	**347N3390**		**-**	483580.01	1-21	0.5-3	-	790	7.0	6
1/4	7	1250	2.5	10	-	-20	50	NBR	**347N3390**		**-**	495910	1-21	0.3-3	-	1420	8.0	-
1/4	7	1250	2.5	10	10	-20	50	NBR	**347N3390**		-	495900	1-21	2	2,5	1420	6.0	-
1/4	7	1250	2.5	10	-	-20	50	NBR	**347N3396**	**347N3397**	**2995**	482740	-	1,6	-	750	6.0	6
1/4	7	1250	2.5	10	-	-20	50	NBR	**347N3396**	**347N3397**	**2995**	496125	2-22	1,6	-	790	6.0	6
1/4	7	1250	2.5	10	-	-20	50	NBR	**347N3396**	**347N3397**	**-**	495910	1-21	0.3-3	-	1420	8.0	-
1/4	7	1250	2.5	10	10	-20	50	NBR	**347N3396**	**347N3397**	-	495900	1-21	2	2,5	1420	6.0	-

5/3 W1 Closed in center position
Solenoid operated and return

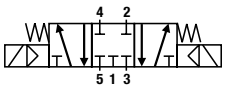

1/4	7	1250	2.5	10	10	-20	50	NBR		**342N33**	**2995**	481865	-	9	8	750	2.0	6
1/4	7	1250	2.5	10	10	-20	50	NBR		**342N33**	**2995**	495870	2-22	9	8	790	2.0	6
1/4	7	1250	2.5	10	10	-20	50	NBR		**342N33**	-	495905	1-21	8	8	1270	2.0	-
1/4	7	1250	2.5	10	-	-20	50	NBR	**342N3396**	**342N3397**	**2995**	482740	-	1,6	-	750	6.0	6
1/4	7	1250	2.5	10	-	-20	50	NBR	**342N3396**	**342N3397**	**2995**	496125	2-22	1,6	-	790	6.0	6
1/4	7	1250	2.5	10	-	-20	50	NBR	**342N3396**	**342N3397**	**-**	495910	1-21	0.3-3	-	1420	8.0	-
1/4	7	1250	2.5	10	10	-20	50	NBR	**342N3396**	**342N3397**	-	495900	1-21	2	2,5	1420	6.0	-

Please consult the "How to Order" part at the end of each coil chapter.

Tel: +45 63 12 83 00 | Email: ps@hymatik.com | www.hymatik.com | Hvidkaervej 27a, DK-5250 Odense SV, Denmark

Dimensions Reference 5

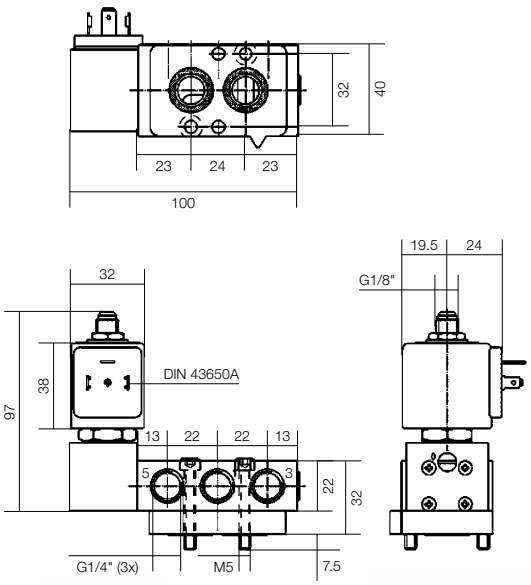

Dimensions Reference 6

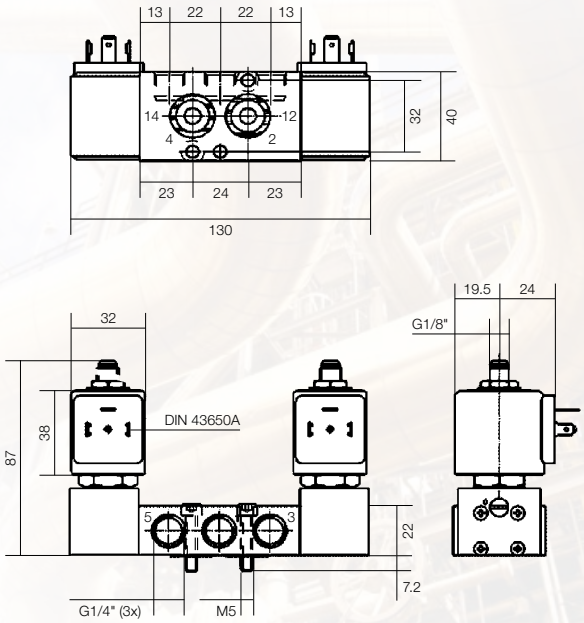

Tel: +45 63 12 83 00 | Email: ps@hymatik.com | www.hymatik.com | Hvidkaervej 27a, DK-5250 Odense SV, Denmark

NAMUR Valves G1/4" Series

External Pressure Air Operated Series
5xx N03 Series

Port size	Orifice	Q_N	Admissible differential pressure (bar) maximum			Fluid Temperature		Seat disc	Reference number			Consumption Power (Watt)		Weight (g)	Elect. Group	Dim. Ref.
G	mm	l/min	min	DC=	AC~	Min °C	Max °C		Valve without man. over.	Housing	Coil	DC=	AC~			
1/4	7	1250	2.5	10	10	-20	50	NBR	**531N03**	-	w/o	-	-	210	-	7

3/2 External pressure air operated
Combined spring & air return (monostable)
External pressure supply 2.5 to 10 bar

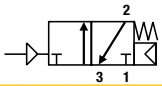

1/4	7	1250	2.5	10	10	-20	50	NBR	**541N03**	-	w/o	-	-	210	-	8

5/2 External pressure air operated
Combined spring & air return (monostable)
External pressure supply 2.5 to 10 bar

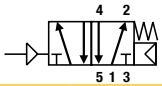

1/4	7	1250	2.5	10	10	-20	50	NBR	**547N03**	-	w/o	-	-	240	-	9

5/2 External pressure air operated
External pressure air return (bistable)
External pressure supply 2.5 to 10 bar

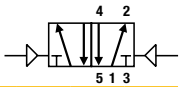

1/4	7	1250	2.5	10	10	-20	50	NBR	**542N03**	-	w/o	-	-	240	-	9

5/3 W1 closed in center position - External pressure air operated
External pressure air return
External pressure supply 2.5 to 10 bar

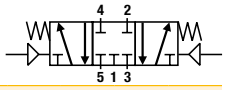

Dimensions Reference 7

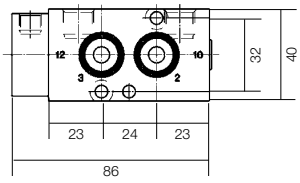

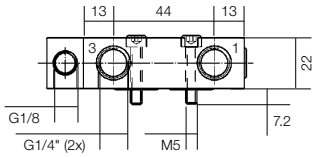

Dimensions Reference 8

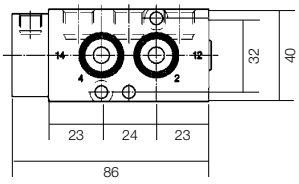

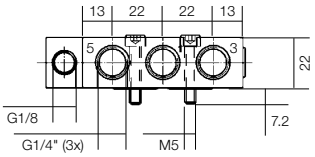

Dimensions Reference 9

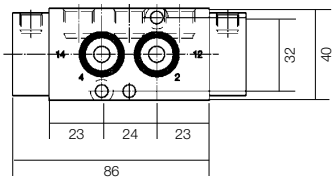

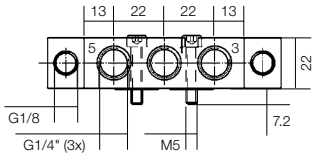

Please consult the "How to Order" part at the end of each coil chapter.

Tel: +45 63 12 83 00 | Email: ps@hymatik.com | www.hymatik.com | Hvidkaervej 27a, DK-5250 Odense SV, Denmark

NAMUR Valves G1/2" Series

Solenoid Operated Versions
N04 Versions

Port size	Orifice	Q_N	Admissible differential pressure (bar) maximum			Fluid Temperature		Seat disc	Reference number				Atex Zone	Consumption Power (Watt)		Weight (g)	Elect. Group	Dim. Ref.
						Min	Max		Valve		Housing	Coil						
									without man. over.	with man. over.								
G	mm	l/min	min	DC=	AC~	°C	°C							DC=	AC~			
3/2 Solenoid operated Combined spring & air return (monostable)																		
1/2	12	3000	2.5	10	10	-20	50	NBR	**331N0402**	**331N04**	-	496131	-	3	3	910	1.2	10
1/2	12	3000	2.5	10	10	-20	50	NBR	**331N0402**	**331N04**	-	496482	-	3	3	925	1.2	10
1/2	12	3000	2.5	10	10	-20	50	NBR	**331N0402**	**331N04**	-	496637	2-22	3	3	925	1.2	10
5/2 Solenoid operated Combined spring & air return (monostable)																		
1/2	12	3000	2.5	10	10	-20	50	NBR		**341N04**	-	496131	-	3	3	910	1.2	11
1/2	12	3000	2.5	10	10	-20	50	NBR		**341N04**	-	496482	-	3	3	925	1.2	11
1/2	12	3000	2.5	10	10	-20	50	NBR		**341N04**	-	496637	2-22	3	3	925	1.2	11
5/2 Solenoid operated and return (bistable)																		
1/2	12	3000	2.5	10	10	-20	50	NBR		**347N04**	-	496131	-	3	3	1240	1.2	12
1/2	12	3000	2.5	10	10	-20	50	NBR		**347N04**	-	496482	-	3	3	1255	1.2	12
1/2	12	3000	2.5	10	10	-20	50	NBR		**347N04**	-	496637	2-22	3	3	1255	1.2	12

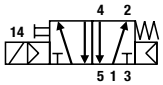

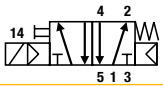



Dimensions Reference 10

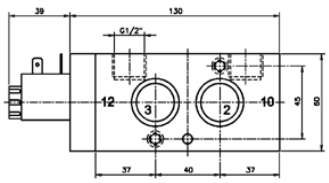

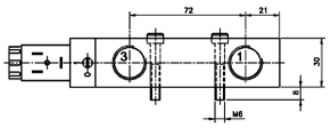

Dimensions Reference 11

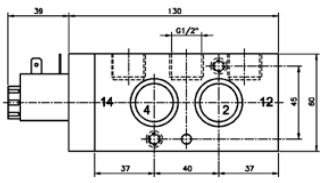

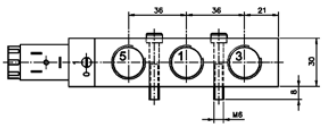

Dimensions Reference 12

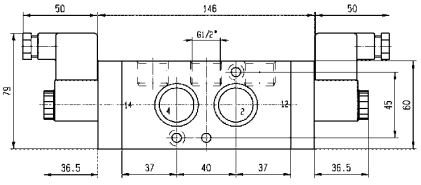

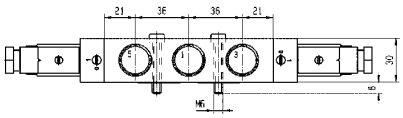

Please consult the "How to Order" part at the end of each coil chapter.

Tel: +45 63 12 83 00 | Email: ps@hymatik.com | www.hymatik.com | Hvidkaervej 27a, DK-5250 Odense SV, Denmark

NAMUR Valves G1/2" Series

Solenoid Operated Versions
N34 Series

Port size	Orifice	Q_N	Admissible differential pressure (bar) maximum			Fluid Temperature		Seat disc	Reference number				Atex Zone	Consumption Power (Watt)		Weight (g)	Elect. Group	Dim. Ref.
									Valve		Housing	Coil						
G	mm	l/min	min	DC=	AC~	Min °C	Max °C		without man. over.	with man. over.				DC=	AC~			

3/2 Solenoid operated
Combined spring & air return (monostable)

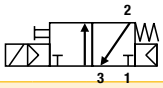

1/2	12	3000	2.5	10	10	-20	50	NBR	**331N3402**	**331N34**	**2995**	481865	-	9	8	810	2.0	13
1/2	12	3000	2.5	10	10	-20	50	NBR	**331N3402**	**331N34**	**2995**	495870	2-22	9	8	830	2.0	13
1/2	12	3000	2.5	10	10	-20	50	NBR	**331N3402**	**331N34**	-	495905	1-21	8	8	1150	2.0	-
1/2	12	3000	2.5	10	-	-20	50	NBR	**331N3496**	**331N3497**	**2995**	482740	-	1,6	-	810	6.0	13
1/2	12	3000	2.5	10	-	-20	50	NBR	**331N3496**	**331N3497**	**2995**	496125	2-22	1,6	-	830	6.0	13
1/2	12	3000	2.5	10	-	-20	50	NBR	**331N3496**	**331N3497**	**-**	495910	1-21	0.3-3	-	1150	8.0	-
1/2	12	3000	2.5	10	10	-20	50	NBR	**331N3496**	**331N3497**	-	495900	1-21	2	2,5	1150	6.0	-

5/2 Solenoid operated
Combined spring & air return (monostable)

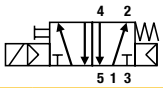

1/2	12	3000	2.5	10	10	-20	50	NBR		**341N34**	**2995**	481865	-	9	8	810	2.0	14
1/2	12	3000	2.5	10	10	-20	50	NBR		**341N34**	**2995**	495870	2-22	9	8	830	2.0	14
1/2	12	3000	2.5	10	10	-20	50	NBR		**341N34**	-	495905	1-21	8	8	1150	2.0	-
1/2	12	3000	2.5	10	-	-20	50	NBR	**341N3496**	**341N3497**	**2995**	482740	-	1,6	-	810	6.0	14
1/2	12	3000	2.5	10	-	-20	50	NBR	**341N3496**	**341N3497**	**2995**	496125	2-22	1,6	-	830	6.0	14
1/2	12	3000	2.5	10	-	-20	50	NBR	**341N3496**	**341N3497**	**-**	495910	1-21	0.3-3	-	1150	8.0	-
1/2	12	3000	2.5	10	10	-20	50	NBR	**341N3496**	**341N3497**	-	495900	1-21	2	2,5	1150	6.0	-

5/2 Solenoid operated and return (bistable)

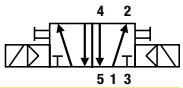

1/2	12	3000	2.5	10	10	-20	50	NBR		**347N34**	**2995**	481865	-	9	8	960	2.0	15
1/2	12	3000	2.5	10	10	-20	50	NBR		**347N34**	**2995**	495870	2-22	9	8	1000	2.0	15
1/2	12	3000	2.5	10	10	-20	50	NBR		**347N34**	-	495905	1-21	8	8	1640	2.0	-
1/2	12	3000	2.5	10	-	-20	50	NBR	**347N3496**	**347N3497**	**2995**	482740	-	1,6	-	960	6.0	15
1/2	12	3000	2.5	10	-	-20	50	NBR	**347N3496**	**347N3497**	**2995**	496125	2-22	1,6	-	1000	6.0	15
1/2	12	3000	2.5	10	-	-20	50	NBR	**347N3496**	**347N3497**	**-**	495910	1-21	0.3-3	-	1640	8.0	-
1/2	12	3000	2.5	10	10	-20	50	NBR	**347N3496**	**347N3497**	-	495900	1-21	2	2,5	1640	6.0	-

Dimensions Reference 13

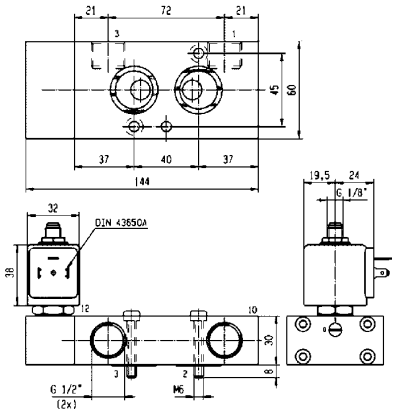

Dimensions Reference 14

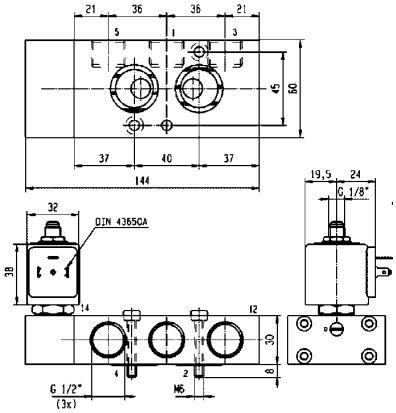

Dimensions Reference 15

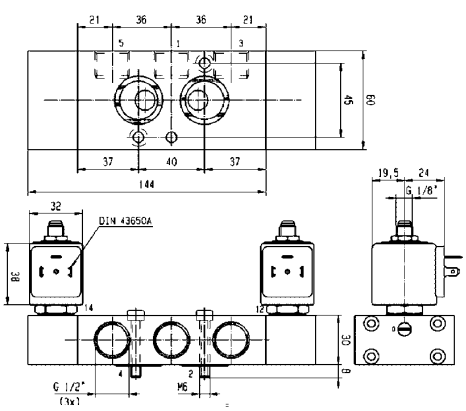

Please consult the "How to Order" part at the end of each coil chapter.

Tel: +45 63 12 83 00 | Email: ps@hymatik.com | www.hymatik.com | Hvidkaervej 27a, DK-5250 Odense SV, Denmark

NAMUR Valves G1/2" Series

External Pressure Air Operated Series
5 xx N04 Series

Port size	Orifice	Q_N	Admissible differential pressure (bar) maximum			Fluid Temperature		Seat disc	Reference number			Consumption Power (Watt)		Weight (g)	Elect. Group	Dim. Ref.
G	mm	l/min	min	DC=	AC~	Min °C	Max °C		Valve without man. override	Housing	Coil	DC=	AC~			
3/2 External pressure air operated Combined spring & air return (monostable) **External pressure supply 2.5 to 10 bar**																
1/2	12	3000	2.5	10	10	-20	50	NBR	**531N04**	-	w/o	-	-	620	-	16
5/2 External pressure air operated Combined spring & air return (monostable) **External pressure supply 2.5 to 10 bar**																
1/2	12	3000	2.5	10	10	-20	50	NBR	**541N04**	-	w/o	-	-	600	-	17

Dimensions Reference 16

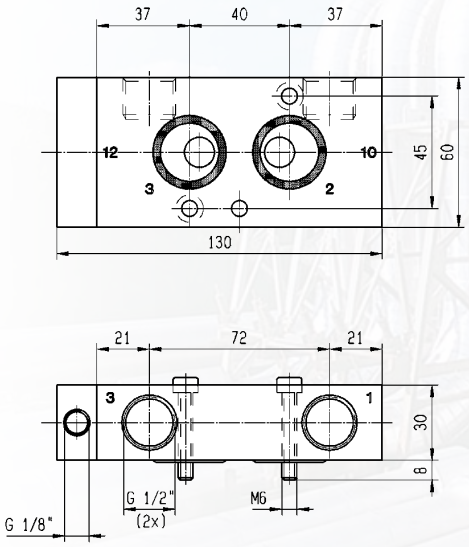

Dimensions Reference 17

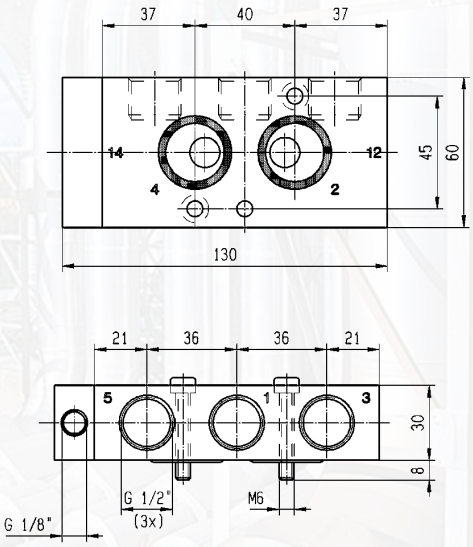

Please consult the "How to Order" part at the end of each coil chapter.

Tel: +45 63 12 83 00 | Email: ps@hymatik.com | www.hymatik.com | Hvidkaervej 27a, DK-5250 Odense SV, Denmark

Piped Valves - G1/4" Series

Solenoid Operated Versions
P03 Versions

Port size	Orifice	Q_N	Admissible differential pressure (bar) maximum			Fluid Temperature		Seat disc	Reference number			Atex Zone	Consumption Power (Watt)		Weight (g)	Elect. Group	Dim. Ref.
G	mm	l/min	min	DC=	AC~	Min °C	Max °C		Valve with man. over.	Housing	Coil		DC=	AC~			

5/2 Solenoid operated
Combined spring & air return (monostable)

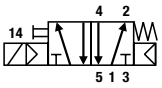

1/4	7	1250	2.5	10	10	-20	50	NBR	**341P03**	-	496131	-	3	3	250	1.2	18
1/4	7	1250	2.5	10	10	-20	50	NBR	**341P03**	-	496482	-	3	3	250	1.2	18
1/4	7	1250	2.5	10	10	-20	50	NBR	**341P03**	-	496637	2-22	3	3	250	1.2	18

5/2 Solenoid operated and return (bistable)



1/4	7	1250	2.5	10	10	-20	50	NBR	**347P03**	-	496131	-	3	3	350	1.2	19
1/4	7	1250	2.5	10	10	-20	50	NBR	**347P03**	-	496482	-	3	3	350	1.2	19
1/4	7	1250	2.5	10	10	-20	50	NBR	**347P03**	-	496637	2-22	3	3	350	1.2	19

Dimensions Reference 18

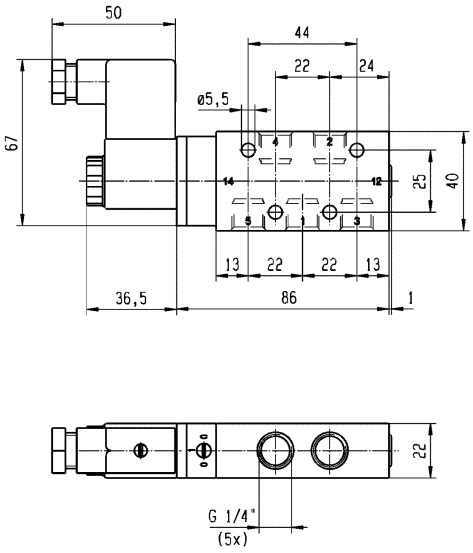

Dimensions Reference 19

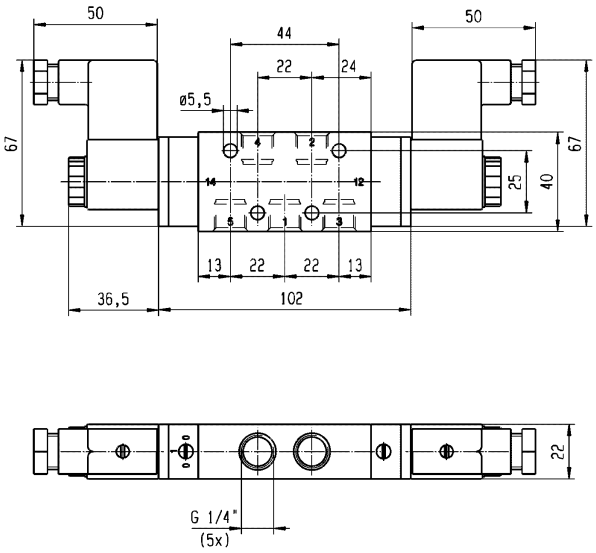

Please consult the "How to Order" part at the end of each coil chapter.

Tel: +45 63 12 83 00 | Email: ps@hymatik.com | www.hymatik.com | Hvidkaervej 27a, DK-5250 Odense SV, Denmark

Piped Valves - G1/4" Series

Solenoid Operated Versions
P33 Versions

Port size	Orifice	Q_N	Admissible differential pressure (bar) maximum			Fluid Temperature		Seat disc	Reference number				Atex Zone	Consumption Power (Watt)		Weight (g)	Elect. Group	Dim. Ref.
									Valve		Housing	Coil						
G	mm	l/min	min	DC=	AC~	Min °C	Max °C		without man. over.	with man. over.				DC=	AC~			

5/2 Solenoid operated
Combined spring & air return (monostable)

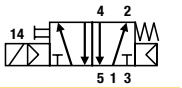

1/4	7	1250	2.5	10	10	-20	50	NBR		**341P33**	**2995**	481865	-	9	8	470	2.0	20
1/4	7	1250	2.5	10	10	-20	50	NBR		**341P33**	**2995**	495870	2-22	9	8	490	2.0	20
1/4	7	1250	2.5	10	10	-20	50	NBR		**341P33**	-	495905	1-21	8	8	810	2.0	-
1/4	7	1250	2.5	10	-	-20	50	NBR	**341P3396**	**341P3397**	**2995**	482740	-	1,6	-	470	6.0	20
1/4	7	1250	2.5	10	-	-20	50	NBR	**341P3396**	**341P3397**	**2995**	496125	2-22	1,6	-	490	6.0	20
1/4	7	1250	2.5	10	-	-20	50	NBR	**341P3396**	**341P3397**	**-**	495910	1-21	0.3-3	-	810	8.0	-
1/4	7	1250	2.5	10	10	-20	50	NBR	**341P3396**	**341P3397**	-	495900	1-21	2	2,5	810	6.0	-

5/2 Solenoid operated and return (bistable)



1/4	7	1250	2.5	10	10	-20	50	NBR		**347P33**	**2995**	481865	-	9	8	620	2.0	21
1/4	7	1250	2.5	10	10	-20	50	NBR		**347P33**	**2995**	495870	2-22	9	8	640	2.0	21
1/4	7	1250	2.5	10	10	-20	50	NBR		**347P33**	-	495905	1-21	8	8	960	2.0	-
1/4	7	1250	2.5	10	-	-20	50	NBR	**347P3396**	**347P3397**	**2995**	482740	-	1,6	-	620	6.0	21
1/4	7	1250	2.5	10	-	-20	50	NBR	**347P3396**	**347P3397**	**2995**	496125	2-22	1,6	-	640	6.0	21
1/4	7	1250	2.5	10	-	-20	50	NBR	**347P3396**	**347P3397**	**-**	495910	1-21	0.3-3	-	960	8.0	-
1/4	7	1250	2.5	10	10	-20	50	NBR	**347P3396**	**347P3397**	-	495900	1-21	2	2,5	960	6.0	-

Dimensions Reference 20

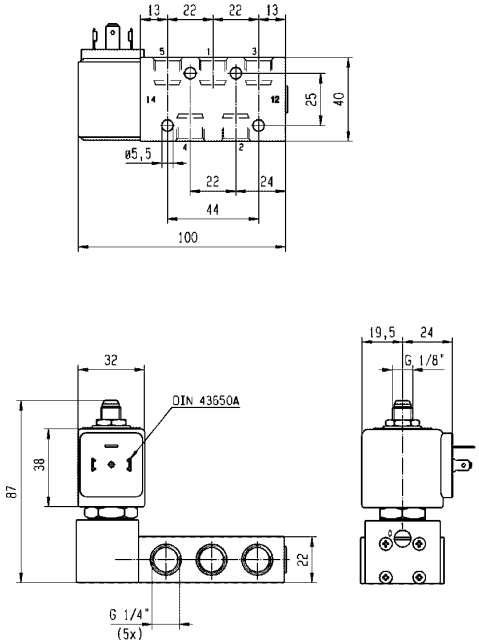

Dimensions Reference 21

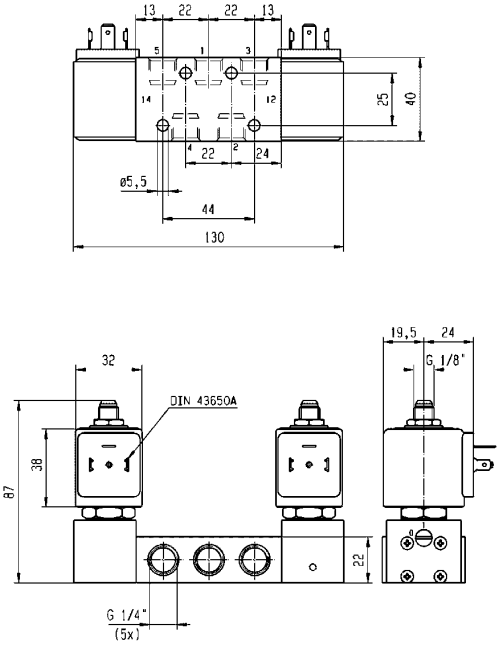

Please consult the "How to Order" part at the end of each coil chapter.

Tel: +45 63 12 83 00 | Email: ps@hymatik.com | www.hymatik.com | Hvidkaervej 27a, DK-5250 Odense SV, Denmark

Piped Valves - G1/2" Series

Solenoid Operated Versions
P04 Versions

Port size	Orifice	Q_N	Admissible differential pressure (bar) maximum			Fluid Temperature		Seat disc	Reference number			Atex Zone	Consumption Power (Watt)		Weight (g)	Elect. Group	Dim. Ref.
G	mm	l/min	min	DC=	AC~	Min °C	Max °C		Valve with man. over.	Housing	Coil		DC=	AC~			
5/2 Solenoid operated Combined spring & air return (monostable)																	
1/2	12	3000	2.5	10	10	-20	50	NBR	**341P04**	-	496131	-	3	3	670	1.2	22
1/2	12	3000	2.5	10	10	-20	50	NBR	**341P04**	-	496482	-	3	3	670	1.2	22
1/2	12	3000	2.5	10	10	-20	50	NBR	**341P04**	-	496637	2-22	3	3	670	1.2	22
5/2 Solenoid operated and return (bistable)																	
1/2	12	3000	2.5	10	10	-20	50	NBR	**347P04**	-	496131	-	3	3	840	1.2	23
1/2	12	3000	2.5	10	10	-20	50	NBR	**347P04**	-	496482	-	3	3	840	1.2	23
1/2	12	3000	2.5	10	10	-20	50	NBR	**347P04**	-	496637	2-22	3	3	840	1.2	23

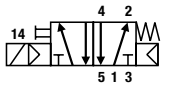



Dimensions Reference 22

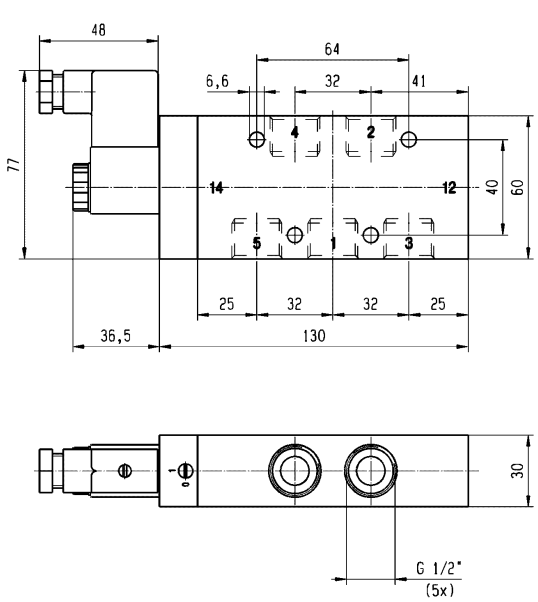

Dimensions Reference 23

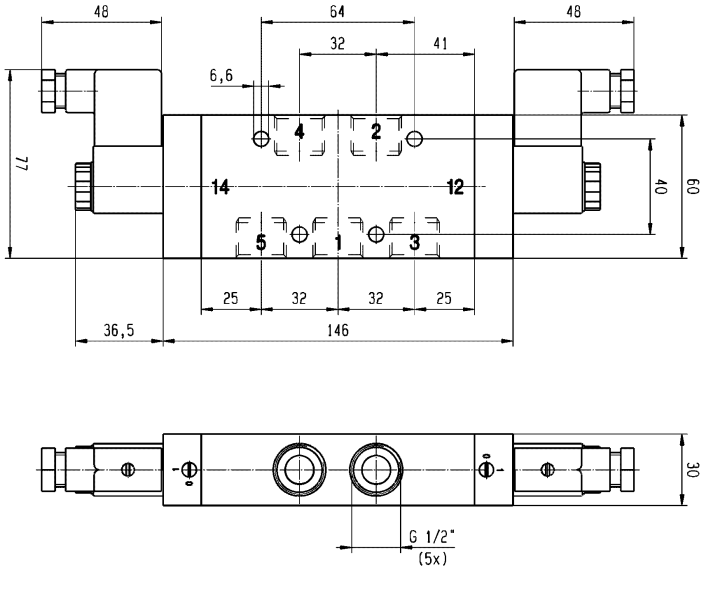

Please consult the "How to Order" part at the end of each coil chapter.

Tel: +45 63 12 83 00 | Email: ps@hymatik.com | www.hymatik.com | Hvidkaervej 27a, DK-5250 Odense SV, Denmark

Piped Valves - G1/2" Series

Solenoid Operated Versions
P34 Versions

Port size	Orifice	Q_N	Admissible differential pressure (bar) maximum			Fluid Temperature		Seat disc	Reference number				Atex Zone	Consumption Power (Watt)		Weight (g)	Elect. Group	Dim. Ref.
									Valve		Housing	Coil						
G	mm	l/min	min	DC=	AC~	Min °C	Max °C		without man. over.	with man. over.				DC=	AC~			

5/2 Solenoid operated
Combined spring & air return (monostable)

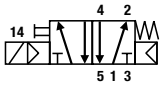

1/2	12	3000	2.5	10	10	-20	50	NBR		**341P34**	**2995**	481865	-	9	8	900	2.0	24
1/2	12	3000	2.5	10	10	-20	50	NBR		**341P34**	**2995**	495870	2-22	9	8	920	2.0	24
1/2	12	3000	2.5	10	10	-20	50	NBR		**341P34**	-	495905	1-21	8	8	1240	2.0	-
1/2	12	3000	2.5	10	-	-20	50	NBR	**341P3496**	**341P3497**	**2995**	482740	-	1,6	-	900	6.0	24
1/2	12	3000	2.5	10	-	-20	50	NBR	**341P3496**	**341P3497**	**2995**	496125	2-22	1,6	-	920	6.0	24
1/2	12	3000	2.5	10	-	-20	50	NBR	**341P3496**	**341P3497**	**-**	495910	1-21	0.3-3	-	1240	8.0	-
1/2	12	3000	2.5	10	10	-20	50	NBR	**341P3496**	**341P3497**	-	495900	1-21	2	2,5	1240	6.0	-

5/2 Solenoid operated and return (bistable)



1/2	12	3000	2.5	10	10	-20	50	NBR		**347P34**	**2995**	481865	-	9	8	1240	2.0	25
1/2	12	3000	2.5	10	10	-20	50	NBR		**347P34**	**2995**	495870	2-22	9	8	1280	2.0	25
1/2	12	3000	2.5	10	10	-20	50	NBR		**347P34**	-	495905	1-21	8	8	2080	2.0	-
1/2	12	3000	2.5	10	-	-20	50	NBR	**347P3496**	**347P3497**	**2995**	482740	-	1,6	-	1240	6.0	25
1/2	12	3000	2.5	10	-	-20	50	NBR	**347P3496**	**347P3497**	**2995**	496125	2-22	1,6	-	1280	6.0	25
1/2	12	3000	2.5	10	-	-20	50	NBR	**347P3496**	**347P3497**	**-**	495910	1-21	0.3-3	-	2080	8.0	-
1/2	12	3000	2.5	10	10	-20	50	NBR	**347P3496**	**347P3497**	-	495900	1-21	2	2,5	2080	6.0	-

Dimensions Reference 24

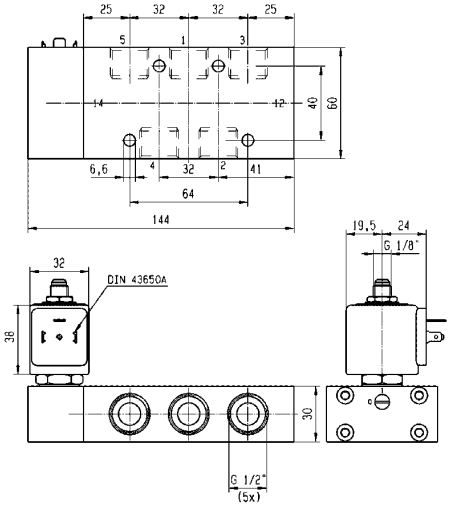

Dimensions Reference 25

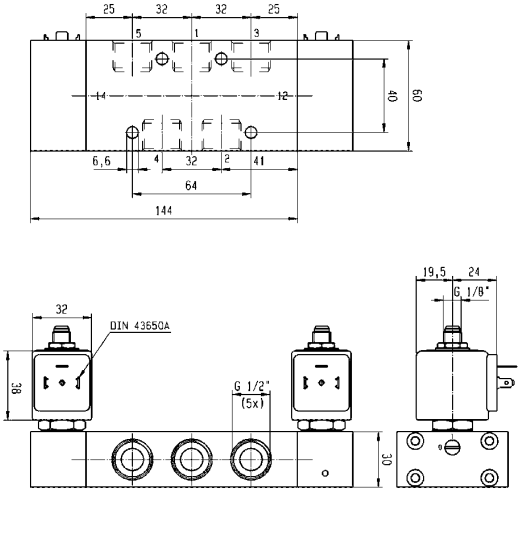

Please consult the "How to Order" part at the end of each coil chapter.

Tel: +45 63 12 83 00 | Email: ps@hymatik.com | www.hymatik.com | Hvidkaervej 27a, DK-5250 Odense SV, Denmark

Banjo Valves - G1/4” & G1/8” Series

Solenoid Operated Versions
B14-B04 Versions

Port size		Orifice	Q_N	Admissible differential pressure (bar) maximum			Fluid Temperature		Seat disc	Reference number			Atex Zone	Consumption Power (Watt)		Weight (g)	Elect. Group	Dim. Ref.
Banjo	G	mm	l/min	min	DC=	AC~	Min °C	Max °C		Valve with man. over.	Housing	Coil		DC	AC			

3/2 Solenoid operated - Spring return (monostable)

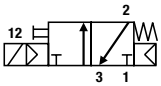

1/8	1/8	1.2	50	0	10	10	-20	50	NBR	**131B14**	-	496131	-	3	3	140	1.2	26
1/8	1/8	1.2	50	0	10	10	-20	50	NBR	**131B14**	-	496482	-	3	3	140	1.2	26
1/8	1/8	1.2	50	0	10	10	-20	50	NBR	**131B14**	-	496637	2-22	3	3	140	1.2	26

3/2 Solenoid operated - Spring return (monostable)

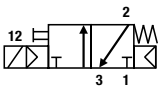

1/4	1/8	1.2	50	0	10	10	-20	50	NBR	**131B04**	-	496131	-	3	3	160	1.2	27
1/4	1/8	1.2	50	0	10	10	-20	50	NBR	**131B04**	-	496482	-	3	3	160	1.2	27
1/4	1/8	1.2	50	0	10	10	-20	50	NBR	**131B04**	-	496637	2-22	3	3	160	1.2	27

Dimensions Reference 26

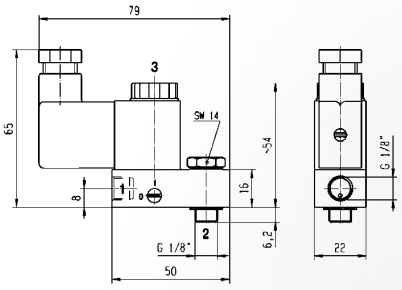

Dimensions Reference 27

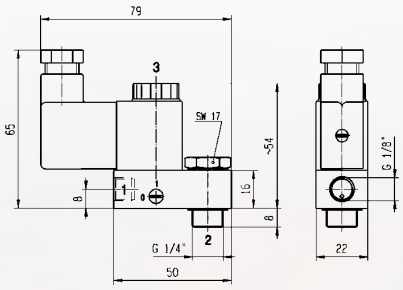

Please consult the "How to Order" part at the end of each coil chapter.

Tel: +45 63 12 83 00 | Email: ps@hymatik.com | www.hymatik.com | Hvidkaervej 27a, DK-5250 Odense SV, Denmark

Coils and Spare Parts Informations

COIL GROUP **1.2**

COMPACT COILS FOR N03 - N04 - N05 Series
DIN PLUG CONNECTION

This coil can be mounted with every Parker solenoid valves corresponding to the specified Coil Group. See column "Coil Group" within valve pages. This coil is designed for valves equipped with a miniature tube assembly. This is an encapsulated assembly comprising a coil, integral magnetic iron path.

The synthetic material encapsulation provides an effective compact housing, offering full protection against dust, oil, water, etc. Ease of mounting in confined space - offers shock and corrosion protection - simplifies conversion of existing equipment to other requirements, etc. Coil conforms to the IEC/CENELEC safety standards and complies with European low-voltage directive.
DIN plug connector to be ordered separately (see coil accessories section).



Specification			Double frequency			
Reference (without DIN Plug) **Reference (with DIN Plug)**			**496131** (Dim. Ref. 1) **496482** (Dim. Ref. 2)			
Coil group			**1.2**			
Degree of protection			**IP65** according to IEC / EN 60529 standards (with DIN plug).			
Class of insulation			F 155°C			
Electrical connection			The coil is connected with a 2 P + E plug according to EN 175301-803 type B.			
Ambient temperature			-20°C to +50°C The application is limited also by the temperature range of the valve.			
Elect. Power	**DC**	**Pn** (hot)	3 W			
		P (cold) 20°C	-			
	AC	**Pn** (holding)	5 VA (50Hz)			
		Attraction cold	8,5 VA (50Hz)			
Weight			60 g			
Voltages "Un"			**VAC/Hz**	**Code**	**VDC**	**Code**
-10% to +10% of the Un			24/50-60 110/50-60 230/50-60 48/50-60	P0 P2 P9 S4	24 V 48 V 110 V	C2 C4 C5

To Order a Coil choose Coil Ref + Voltage Code, example: **496131** for **24 VDC** = **496131C2**

"The housing kit is already included in the valve reference, it is not needed to order it separately."

Dimensions Reference 1

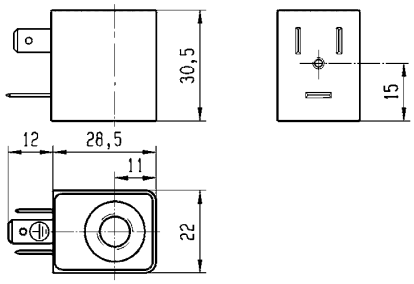

Dimensions Reference 2

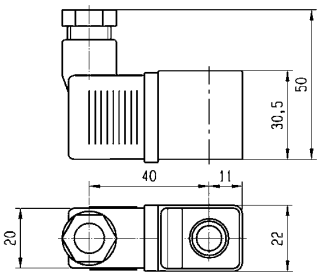

Tel: +45 63 12 83 00 | Email: ps@hymatik.com | www.hymatik.com | Hvidkaervej 27a, DK-5250 Odense SV, Denmark

Coils and Spare Parts Informations

ATEX Zone 22

COIL GROUP
1.2

COMPACT COILS FOR N03-N04-N05 Series
Non Sparking Protection - DIN PLUG

This coil can be mounted with every Parker ATEX solenoid valves corresponding to the specified Coil Group.
See column "Coil Group" within valve pages.

Application:
Control of solenoid valves in dangerous areas where explosion-proof protection is required.

Benefits:
The synthetic material encapsulation of the coil provides an effective compact housing, offering full protection against dust, oil, water, etc.
Small size for ease of mounting in confined spaces.



Specification			Double Frequency			
Reference			496637			
Certificate			ATEX			
Coil group			1.2			
Type of protection		Gas	Ex nAc nCc IIC T5			
		Dust	II 3 D - Ex tc IIIC - T 95°C			
Degree of protection			**IP65** (with plug) according to IEC/EN 60529			
Ambiant temperature			-20°C to +50°C The application is limited also by the temperature range of the valve.			
Insulation Class			F 155°C			
Elect. Power	DC	**Pn** (hot)	3 W			
		P (cold) 20°C	-			
	AC	**Pn** (holding)	5 VA (50Hz)			
		Attraction cold	8,5 VA (50Hz)			
Weight			75 g			
Voltages "Un"			VAC/Hz	Code	VDC	Code
-10% to +10% of the Un			24/50-60 110/50-60 230/50-60 48/50-60	P0 P2 P9 S4	24 V 48 V 110 V	C2 C4 C5

To Order a Coil choose Coil Ref + Voltage Code, example: **496637** for **24 VDC** = **496637C2**

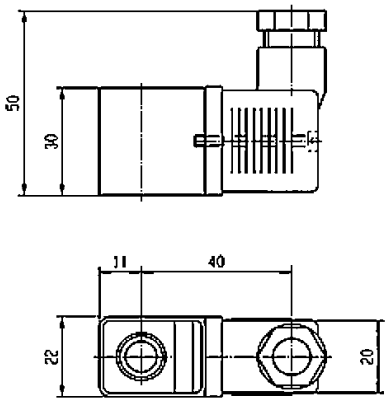

Tel: +45 63 12 83 00 | Email: ps@hymatik.com | www.hymatik.com | Hvidkaervej 27a, DK-5250 Odense SV, Denmark

COIL GROUP

2.0/2.1 COILS FOR N33-N34-N35 Series DIN PLUG CONNECTION

These coils can be mounted with every Parker solenoid valves corresponding to the specified Coil Group.
See column "Coil Group" within valve pages. This is an encapsulated assembly comprising a coil, integral magnetic iron path and snap-on plug connection.

The synthetic material encapsulation provides an effective compact housing, offering full protection against dust, oil, water, etc. Ease of mounting in confined space - offers shock and corrosion protection - simplifies conversion of existing equipment to other requirements, etc.

Coils conform to the IEC/CENELEC safety standards and complies with European low-voltage directive.



Specification			Standard				Double frequency	
Ref. (without DIN plug) Ref. (with DIN plug)			481865 482725				483510 482635	
Coil Group			2.0 / 2.1					
Degree of protection			**IP65** according to IEC / EN 60529 standards (with DIN plug).					
Class of insulation			F 155°C					
Electrical connection			The coil is connected with a 2 P + E plug according to EN 175301-803 type A					
Ambient temperature			-40°C to +50°C - The application is limited also by the temperature range of the valve.					
Elect. Power	DC	**Pn** (hot)	9 W				-	
		P (cold) 20°C	12 W				-	
	AC	**Pn** (holding)	8 W				9 W	
		Attraction cold	26 VA (9 W)				32 VA (10 W)	
Weight			130 g (without plug)					
Voltages "Un"			VAC/Hz	Code	VDC	Code	VAC/Hz	Code
-10% to +10% of the Un			24/50 48/50 110/50 220-230/50	A2 A4 A5 3D	24 48 110	C2 C4 C5	24/50, 24/60 48/50, 48/60 110-115/50, 120/60 220-240/50, 240/60	P0 S4 S5 S6

To Order a Coil choose Coil Ref + Voltage Code, example: **481865** for **24 VDC** = **481865C2**

These coils must be used with suitable housings, see example below:
The coil assembly kit **Ref. 2995** corresponds to the "housing" of Lucifer® valve numbering system (Valve - housing - coil - voltage). It is composed of a nameplate, a label giving details of the valve type, a round washer and a nut to ensure the fixing between 32 mm coil and the valve.



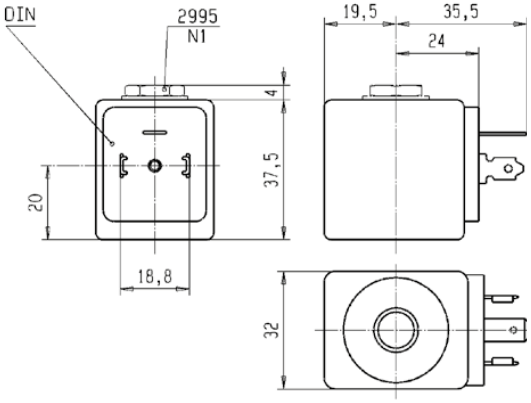

Safe Area

Coils and Spare Parts Informations

COIL GROUP **2.0/2.1**

COILS FOR N33-N34-N35 Series SCREW TERMINAL

These coils can be mounted with every Parker Solenoid Valves corresponding to the specified Coil Group.

See column "Coil Group" within valve pages. They can be mounted with all metal housings.

The coil winding is completely encapsulated in synthetic material. Easy mounting in confined spaces. Electrical connection with screw terminals for wire up to 1.5 mm².

Coils conform to the IEC/CENELEC safety standards and complies with European low-voltage directive.



Specification			Standard				Double Frequency	
Reference			481000				483520	
Coil Group			2.0 / 2.1					
Class of insulation			F 155°C					
Ambient temperature			-40°C to +50°C The application is limited also by the temperature range of the valve.					
Elect. Power	DC	Pn (hot)	8W				-	
		P (cold) 20°C	9W				-	
	AC	Pn (holding)	8W				9W	
		Attraction cold	32 VA (9 W)				36 VA (10 W)	
Weight			130 g				130 g	
Voltages "Un"			VAC/Hz	Code	VDC	Code	VAC/Hz	Code
-10% to +10% of the Un (-15 % to +5 % for double-frequency coil with voltage code S6 if 240 V/50/Hz is used).			24/50 48/50 110/50-115/50 220/50-230/50	A2 A4 0A 3D	24 48 110	C2 C4 C5	24/50-60 48/50-60 110-115/50-120/60 220-240/50-240/60	P0 S4 S5 S6

To Order a Coil choose Coil Ref + Voltage Code, example: **4828** for **24 VDC** = **481000C2**

These coils must be used with suitable housings, see examples below:

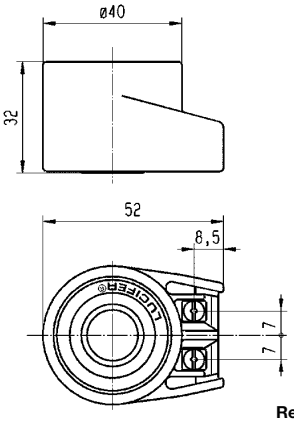



Ref. 4270 - Protection **IP 44** according to IEC / EN 60529 standard (with cable gland)



Ref. 4538 - Protection **IP 67** according to IEC / EN 60529 standard

Tel: +45 63 12 83 00 | Email: ps@hymatik.com | www.hymatik.com | Hvidkaervej 27a, DK-5250 Odense SV, Denmark

COIL GROUP

6.0

COILS FOR N339x-N349x-N359x Series
LOW POWER - DIN PLUG CONNECTION

These coils can be mounted with every Parker Solenoid Valves corresponding to the specified Coil Group.

See column "Coil Group" within valve pages. They can be mounted with all metal housings.

The synthetic material encapsulation provides an effective compact housing, offering full protection against dust, oil, water, etc.
Ease of mounting in confined space - offers shock and corrosion protection - simplifies conversion of existing equipment to other requirements, etc.
Coils conform to the IEC/CENELEC safety standards and complies with European low-voltage directive.



Specification			Miniwatt	
Reference (without DIN plug) Reference (with DIN plug)			**482740** **482745**	
Coil Group			**6.0**	
Degree of protection			**IP65** according to IEC / EN 60529 standards (with DIN plug).	
Class of insulation			F 155°C	
Electrical connection			The coil is connected with a 2 P + E plug according to EN 175301-803 type A	
Ambient temperature			-40°C to +50°C The application is limited also by the temperature range of the valve.	
Elect. Power	DC	**Pn** (hot)	1.6 W	
		P (cold) 20°C	2.1 W	
	AC	**Pn** (holding)	-	
		Attraction cold	-	
Weight			130 g (without plug)	
Voltages "Un"			**VDC**	**Code**
-10% to +10% of the Un			24 48 110	C2 C4 C5

To Order a Coil choose Coil Ref + Voltage Code, example: **482740** for **24 VDC** = **482740C2**

These coils must be used with suitable housings, see example below:
The coil assembly kit **Ref. 2995** corresponds to the "housing" of Lucifer® valve numbering system (Valve - housing - coil - voltage). It is composed of a nameplate, a label giving details of the valve type, a round washer and a nut to ensure the fixing between 32 mm coil and the valve.



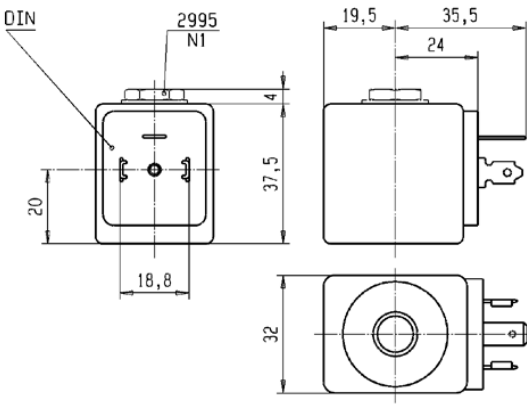

Coils and Spare Parts Informations

ATEX Zone 22

COIL GROUP **2.0/2.1**

COILS FOR N33-N34-N35 Series
Non Sparking Protection - DIN PLUG

These coils can be mounted with every Parker ATEX solenoid valves corresponding to the specified Coil Group. See column "Coil Group" within valve pages.

Application: Control of solenoid valves in dangerous areas where non sparking protection Ex nc AC IIC T3 to T4 is required.

Ease of mounting in confined space - offers shock and corrosion protection - simplifies conversion of existing equipment to other requirements, etc. Coils conforms to the IEC/CENELEC safety standards and complies with European low-voltage directive.

Small size for ease of mounting in confined spaces.



Reference			**495870**			
Certificate			**LCIE 05 ATEX 6003 X**			
Coil Group			**2.0 / 2.1**			
Type of protection		**Gas**	II 3 G - Ex nAc nCc IIC T3 to T4			
		Dust	II 3 D - Ex tc IIIC - T195°C to T130°C			
Degree of protection			IP65 (with plug) according to IEC/EN 60529			
Insulation Class			F (155°C)			
Duty cycle			100%			
Ambiant temperature			-40°C to +50°C The application is limited also by the temperature range of the valve.			
Elect. Power	**DC**	**Pn (hot)**	9 W			
		P (cold) 20°C	12 W			
	AC	**Pn** (holding)	8 W			
		Attraction cold	26 VA (9 W)			
Weight			150 g			
Voltages "Un" -10% to +10% of the Un			**VAC/Hz**	**Code**	**VDC**	**Code**
			24/50 48/50 110/50 220-230/50	A2 A4 A5 3D	24 48 110	C2 C4 C5

To Order a Coil choose Coil Ref + Voltage Code, example: **495870** for **24 VDC** = **495870C2**

These coils must be used with suitable housings, see example below:

The coil assembly kit **Ref. 2995** corresponds to the "housing" of Lucifer® valve numbering system (Valve - housing - coil - voltage).

It is composed of a nameplate, a label giving details of the valve type, a round washer and a nut to ensure the fixing between 32 mm coil and the valve.



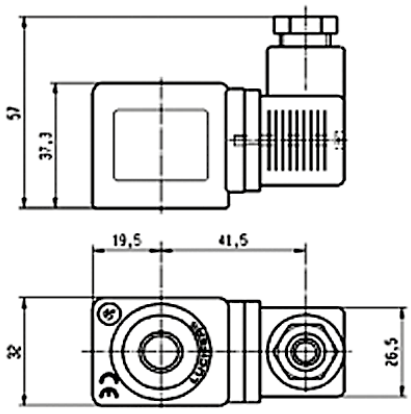

Tel: +45 63 12 83 00 | Email: ps@hymatik.com | www.hymatik.com | Hvidkaervej 27a, DK-5250 Odense SV, Denmark

COIL GROUP

6.0

COILS FOR N339x-N349x-N359x Series
Non Sparking Protection - LOW POWER

These coils can be mounted with every Parker ATEX solenoid valves corresponding to the specified Coil Group. See column "Coil Group" within valve pages.

Application: Control of solenoid valves in dangerous areas where non sparking protection Ex nAc nCc IIC T5/T6 is required.

Ease of mounting in confined space - offers shock and corrosion protection - simplifies conversion of existing equipment to other requirements, etc.

Benefits: The synthetic material encapsulation of the coil provides an effective compact housing, offering full protection against dust, oil, water, etc. Small size for ease of mounting in confined spaces.



Reference			**496125**	
Certificate			**LCIE 05 ATEX 6003 X**	
Coil group			**6.0**	
Type of protection		**Gas**	II 3 G - Ex nAc nCc IIC T5 to T6	
		Dust	II 3 D Ex tc IIIC T95°C to T80°C	
Degree of protection			**IP65** (with plug) according to IEC/EN 60529 Standards	
Insulation Class			F (155°C)	
Duty cycle			100%	
Ambiant temperature			-40°C to +65°C / 50°C The application is limited also by the temperature range of the valve.	
Elect. Power	**DC**	**Pn** (hot)	1.6 W	
		P (cold) 20°C	2.1 W	
	AC	**Pn** (holding)	-	
		Attraction cold	-	
Weight			150 g	
Voltages "Un"			**VDC**	**Code**
-10% to +10% of the Un			24	C2
			48	C4
			110	C5

To Order a Coil choose Coil Ref + Voltage Code, example: **496125** for **24 VDC** = **496125C2**

These coils must be used with suitable housings, see example below:

The coil assembly kit **Ref. 2995** corresponds to the "housing" of Lucifer® valve numbering system (Valve - housing - coil - voltage).

It is composed of a nameplate, a label giving details of the valve type, a round washer and a nut to ensure the fixing between 32 mm coil and the valve.



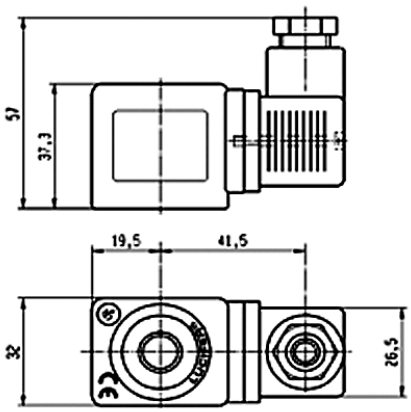

COIL GROUP

2.0/2.1

COILS FOR N33-N34-N35 Series
Flameproof & Encapsulated

These coils can be mounted with every Parker ATEX solenoid valves corresponding to the specified Coil Group.
See column "Coil Group" within valve pages.

Application: Control of solenoid valves in dangerous areas where Flameproof & Encapsulated protection Ex db mb IIC T4 is required.

Benefits: Rotatable 360° fibreglass-reinforced plastic housing (class H). Solenoid coil, rectifier (silicium diodes), fuses and varistor protection are completely encapsulated into the coil housing by epoxy resin for shock and corrosion protection. The plastic housing is delivered with M20 x 1.5 cable gland certified for use "db" protection. Small size for ease of mounting in confined space.



Reference			495905
Certificate			LCIE 03 ATEX 6451 X / 04 - IECEx LCI 06.0004 X
Coil Group			2.0 / 2.1
Type of protection		Gas	II 2 G - Ex db mb IIC T4
		Dust	II 2 D - Ex tb IIIC - T130°C
Degree of protection			IP67
Ambient temperature			-40°C to +65°C The application is limited also by the temperature range of the valve.
Class of insulation			H (180 °)
Electrical connection			Electric connection is done in the connection box on an easily accessible connector terminals. The introduction of the cable (Ø min 5 mm, Ømax. 11 mm, section max. 2.5 mm²) in the connection box passes by the built in M20 x 1.5 cable gland.
Elect. Power	DC	Pn (hot)	8 W
		P (cold) 20°C	9 W
	AC	Pn (holding)	8 W
		Attraction cold	9 W

Voltages "Un"	VAC/Hz	Code
-10% to +10% of Un for AC - 10 % to + 10 % for Un DC.	24/50 48/50 115/50 230/50	A2 A4 E5 F4

To Order a Coil choose Coil Ref + Voltage Code, example: **495905** for **24 VDC** = **495905C2**

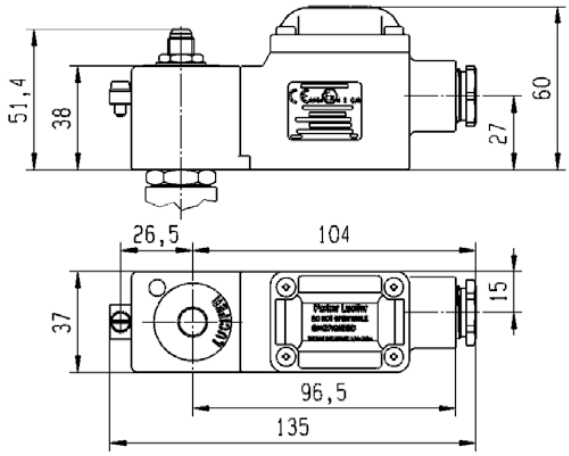

495905

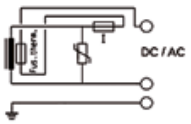

***495905.05**

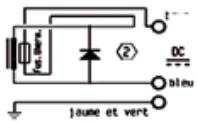

Tel: +45 63 12 83 00 | Email: ps@hymatik.com | www.hymatik.com | Hvidkaervej 27a, DK-5250 Odense SV, Denmark

Coils and Spare Parts Informations

COIL GROUP **6.0**

COILS FOR N339x-N349x-N359x Series
Flameproof & Encapsulated
LOW POWER

ATEX zone 1-21

This coil can be mounted with every Parker ATEX solenoid valves corresponding to the specified Coil Group.
See column "Coil Group" within valve pages.

Application: Control of solenoid valves in dangerous areas where Flameproof & Encapsulated protection Ex db mb IIC T4 to T6 is required.

Benefits: Rotatable 360° fibreglass-reinforced plastic housing (class H). Solenoid coil, rectifier (silicium diodes), fuses and varistor protection are completely encapsulated into the coil housing by epoxy resin for shock and corrosion protection. The plastic housing is delivered with M20 x 1.5 cable gland certified for use "db" protection. Small size for ease of mounting in confined space.



Reference			495900 (VAC)		495900 (VDC)	
Certificate			LCIE 03 ATEX 6451 X / 04- IECEx LCI 06.0004 X			
Coil Group			6.0			
Type of protection		Gas	II 2 G - Ex db mb IIC T4 / T5 / T6		II 2 G - Ex db mb IIC T4 / T5 / T6	
		Dust	II 2 D Ex tb IIIC - 130°C / 95°C / 80°C		II 2 D Ex tb IIIC - 130°C / 95°C / 80°C	
Degree of protection			IP67			
Ambient temperature			-40°C to +80°C / +55°C / +40°C The application is limited also by the temperature range of the valve.		-40°C to +80°C / +65°C / +55°C	
Class of insulation			H (180 °)			
Electrical connection			Electric connection is done in the connection box on an easily accessible connector terminals. The introduction of the cable (Ø min 5 mm, Ømax. 11 mm, section max. 2.5 mm²) in the connection box passes by the built in M20 x 1.5 cable gland			
Elect. Power	DC	Pn (hot)	-		2 W	
		P (cold) 20°C	-		2.5 W	
	AC	Pn (holding)	2.5 W		-	
		Attraction cold	3 W		-	
Voltages "Un"			VAC/Hz	Code	VDC	Code
-10% to +10% of Un for AC - 10 % to + 10 % for Un DC.			24/50 48/50 115/50 230/50	A2 A4 E5 F4	24 48 110	C2 C4 C5

To Order a Coil: Coil Ref + Voltage Code, example: 495900 for 24 VDC = **495900C2**

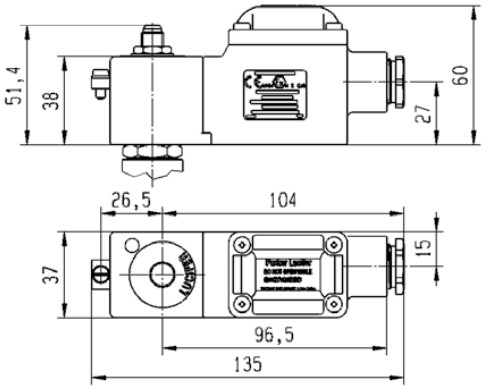

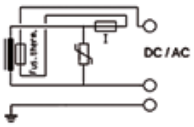

Tel: +45 63 12 83 00 | Email: ps@hymatik.com | www.hymatik.com | Hvidkaervej 27a, DK-5250 Odense SV, Denmark

ATEX zone 1-21

COIL GROUP

2.0/2.1

COILS FOR N33-N34-N35 Series
Increased Safety

This coil can be mounted with every Parker ATEX solenoid valves corresponding to the specified Coil Group.
See column "Coil Group" within valve pages.

Application: Control of solenoid valves in dangerous areas where explosion-proof protection Ex eb II T3 orT4 is required.

Benefits: Rotatable housing 360°, galvanized steel with internal and external screw terminals for earth connection.
Small size for ease of mounting in confined space. Simplifies conversion of existing equipment to hazardous area requirements.



Reference			483371				494040			
Certificate			LCIE 02 ATEX 6011 X				LCIE 02 ATEX 6013 X			
Coil Group			2.0 / 2.1							
Type of protection		Gas	II 2 G - Ex eb IIC T4				II 2 G - Ex eb IIC T3 / T4			
		Dust	II 2 D - Ex tb IIIC - T130°C				II 2 D - Ex tb IIIC - T195°C / T130 °C			
Degree of protection			IP67							
Ambiant temperature			-40°C to +65°C The application is limited also by the temperature range of the valve.				-40°C to +90°C / to +65°C			
Class of insulation			F 155°C				F (180°)			
Electrical connection			By special cable gland or M20 x 1.5 "Ex eb" on screw terminals for wires up to 1.5 mm². Cables with outside diameter 6.5 mm to 13.5 mm can be simply sealed using the ru bber gland with resilient sealing rings supplied.							
Elect. Power	DC	Pn (hot)	8 W				8 W			
		P (cold) 20°C	9 W				9 W			
	AC	Pn (holding)	8 W				8 W			
		Attraction cold	32 VA (9 W)				32 VA (9 W)			
Weight			320 g							
Voltages "Un"			VAC/Hz	Code	VDC	Code	VAC/Hz	Code	VDC	Code
-10% to +10% of the Un			24/50 48/50 110-115/50 220-230/50	A2 A4 OA 3D	24 48 110	C2 C4 C5	220-230/50	3D	24	C2

To Order a Coil choose Coil Ref + Voltage Code, example: **483371** for **24 VDC** = **483371C2**

Fuses:
Both electrical parts have to be connected in series with a safety fuse according to IEC 60127-3.

483371:

DC: 24 V, 400 mA - 48V, 250 mA - 110 V, 100 mA

AC 50HZ: 24 V, 630 mA - 48V, 315 mA - 110 V, 160 mA - 220/230 V, 80 mA

494040:

DC: 12 V, 400 mA - 24V, 200 mA - 48 V, 100 mA - 110V, 50 mA

AC 50HZ: 24 V, 250 mA - 48V, 125 mA - 110/115 V, 63 mA - 220/230 V, 32 mA

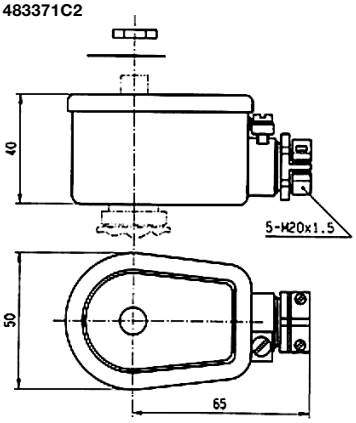

Tel: +45 63 12 83 00 | Email: ps@hymatik.com | www.hymatik.com | Hvidkaervej 27a, DK-5250 Odense SV, Denmark

COIL GROUP

8.0

COILS FOR N339x-N349x-N359x Series
Intrinsic Safety

These coils can be mounted with every Parker ATEX solenoid valves corresponding to the specified Coil Group. See column "Coil Group" within valve pages. These coils are Zone 0 capable but when used with an high flow valve that is zone 1 capable only, the assembly created is zone 1 capable.

Application: Control of solenoid valves in dangerous areas where explosion-proof protection Ex ia IIC T4 to T6 is required.

Benefits: Rotatable 360° fibreglass-reinforced plastic housing (Class H). Solenoid coil, rectifier (silicium diodes), fuses and varistor protection are completely encapsulated into the coil housing by epoxy resin for shock and corrosion protection.
Small size for ease of mounting in confined space.
Available only in 28 VDC (code: N7)



Reference			**495910**
Certificate			**LCIE 03 ATEX 6464 X - IECEx LCI 07.0006 X**
Coil Group			**8.0**
Type of protection		**Gas**	II 1 G - Ex ia IIB or IIC - T4 to T6
		Dust	II 1 D - Ex ta IIIC - T130°C to T80°C
Degree of protection			**IP67**
Ambiant temperature			-40°C to +65°C / +75°C / +80°C The application is limited also by the temperature range of the valve.
Electrical connection			Electric connection is done in the connection box on an easily accessible connector terminals. The introduction of the cable (Ø min 7 mm, Ømax. 11 mm, section max. 2.5 mm²) in the connection box passes by the built in M20 x 1.5 cable gland
Maximum supply voltage			28 VDC (N7) - 110 mA
Power	**DC**	**Minimum**	0.3 W (with 13 VDC)
		Maximum	1.2 W (with 24 VDC)
			Depending on applied voltage, IS barrier type and resistance of connected cable
Line check			4 mA or 5 VDC max
Coil resistance at 20°C **Impedance** **Apparent inductance** **Apparent capacitance**			Charge ~ 550 Ω - Holding ~ 500 Ω 0 mH 0 µF
Response time			2 - 3 s
Weight			500 g

To Order a Coil choose Coil Ref + Voltage Code, example: **495910** for **28 VDC** = **495910N7**

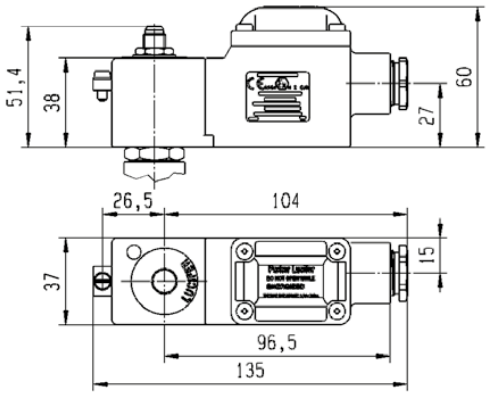

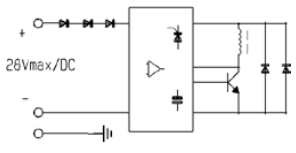

Tel: +45 63 12 83 00 | Email: ps@hymatik.com | www.hymatik.com | Hvidkaervej 27a, DK-5250 Odense SV, Denmark

Coils and Spare Parts Informations

COIL GROUP

7.0

COILS FOR N3390-N3590 Series
Intrinsic Safety

These coils can be mounted with every Parker ATEX solenoid valves corresponding to the specified Coil Group.
See column "Coil Group" within valve pages. These coils are Zone 0 capable but when used with an high flow valve that is zone 1 capable only, the assembly created is zone 1 capable.

Application: Control of solenoid valves in dangerous areas where explosion-proof protection Ex ia or ib IIC T6 is required.

Benefits: Fully encapsulated assembly comprising a coil, metal armature, three diodes circuit and DIN plug connection. The encapsulation provides an effective compact housing offering full protection against dust, oil, water, etc. Small size for ease of mounting in confined space.



Reference (without plug) (with plug)			**483580.01 483960.01**
Certificate			**LCIE 02 ATEX 6065 X - IECEx LCI 07.0025 X**
Coil Group			**7.0**
Type of protection		**Gas**	II 1 G - Ex ia IIC - T6
		Dust	II 1 D - Ex ta IIIC - T80°C
Degree of protection			IP65 with plug
Ambiant temperature			- 40°C à + 55°C The operating temperature of the valve/coil can be limited by that of the valve.
Class of insulation			F 155°C
Electrical connection			The coil is connected with a 2P + E plug according to EN 175301-803 type A Contact 1 is marked as the positive pole ⊕.
Maximum supply voltage			28 VDC (N7) - 110 mA The minimum operating voltage at maximum 60°C is 14 VDC.
Power	**DC**	**Minimum**	500 mW
		Maximum	3 W
			Depending on applied voltage, IS barrier type and resistance of connected cable
Coil resistance at 20°C Impedance Apparent inductance Apparent capacitance			340 Ω 340 Ω 0 mH 0 µF
Weight			160 g (with plug)

To Order a Coil choose Coil Ref + Voltage Code, example: **483580.01** for **28 VDC** = **483580.01N7**

These coils must be used with suitable housings, see example below:
The coil assembly kit **Ref. 2995** corresponds to the "housing" of Lucifer® valve numbering system (Valve - housing - coil - voltage). It is composed of a nameplate, a label giving details of the valve type, a round washer and a nut to ensure the fixing between 32 mm coil and the valve.

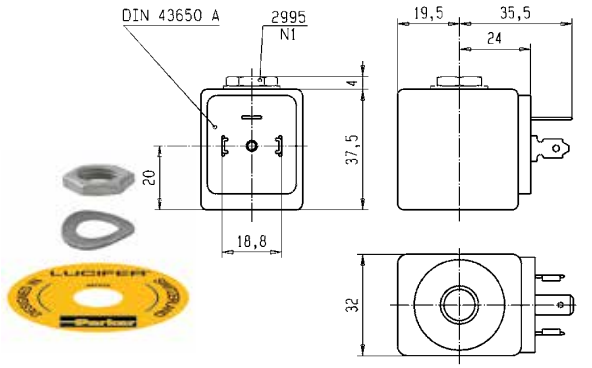

Important

The intrinsically safe supply circuit should have enough capacity in all environmental conditions to assure a **minimum operating current of 35 mA** through the coil.

The minimal holding current is 20 mA.

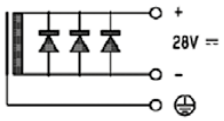

For the barrier compatibility see the corresponding table in appendix section.

Tel: +45 63 12 83 00 | Email: ps@hymatik.com | www.hymatik.com | Hvidkaervej 27a, DK-5250 Odense SV, Denmark

Spare Parts Mounting Kit and Accessories

Kit for G1/4" Models without conversion plate (N x 3 Series)



Kit includes the 2 mounting screws M5 x 25 A2, the dowel pin M5 x 10 A2, the 2 O-rings NBR 15 x 2.5
Order code: 496132

Kit for G1/4" Models with conversion plate (N x 5 Series)

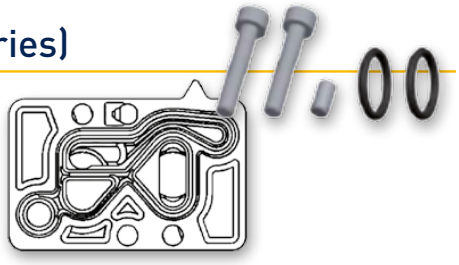

Kit includes the 2 mounting screws M5 x 35 A2, the dowel pin M5 x 20 A2, the conversion plate equipped with its seals
Order code: 496742 (equipped plate)
Order code: 496852 (screws + pin)

Kit for G1/2" Models (N x 4 Series)



Kit includes the 2 mounting screws M6 x 35 A2, the dowel pin M6 x 12 A2, the 2 O-rings NBR 24 x 3
Order code: 496133

Exhaust Flow Regulators



Material Body: Brass **Filter element:** Sintered bronze
Spring: Stainless Steel **Seal:** NBR

G1/8" **Order code: 496551** G1/4" **Order code: 496552** G1/2" **Order code: 496553**

Tel: +45 63 12 83 00 | Email: ps@hymatik.com | www.hymatik.com | Hvidkaervej 27a, DK-5250 Odense SV, Denmark

Connector DIN B



Connector DIN43650 AB Pg9 2P+E
Order code: 481043

Housing for 22 mm Coil



Plastic nut with O-ring
Order code: 3125

Connector DIN A



Connector DIN43650 AA Pg9 2P+E
Order code: 486586



WARNING - USER RESPONSIBILITY
FAILURE OR IMPROPER SELECTION OR IMPROPER USE OF THE PRODUCTS DESCRIBED HEREIN OR RELATED ITEMS CAN CAUSE DEATH, PERSONAL INJURY AND PROPERTY DAMAGE.

- This document and other information from Parker-Hannifin Corporation, its subsidiaries and authorized distributors provide product or system options for further investigation by users having technical expertise.
- The user, through its own analysis and testing, is solely responsible for making the final selection of the system and components and assuring that all performance, endurance, maintenance, safety and warning requirements of the application are met. The user must analyze all aspects of the application, follow applicable industry standards, and follow the information concerning the product in the current product catalog and in any other materials provided from Parker or its subsidiaries or authorized distributors.
- To the extent that Parker or its subsidiaries or authorized distributors provide component or system options based upon data or specifications provided by the user, the user is responsible for determining that such data and specifications are suitable and sufficient for all applications and reasonably foreseeable uses of the components or systems.

Parker's Motion & Control Technologies

At Parker, we're guided by a relentless drive to help our customers become more productive and achieve higher levels of profitability by engineering the best systems for their requirements. It means looking at customer applications from many angles to find new ways to create value. Whatever the motion and control technology need, Parker has the experience, breadth of product and global reach to consistently deliver. No company knows more about motion and control technology than Parker. For further info call 00800 27 27 5374



Aerospace

Key Markets

Aftermarket services
Commercial transports
Engines
General & business aviation
Helicopters
Launch vehicles
Military aircraft
Missiles
Power generation
Regional transports
Unmanned aerial vehicles

Key Products

Control systems & actuation products
Engine systems & components
Fluid conveyance systems & components
Fluid metering, delivery & atomization devices
Fuel systems & components
Fuel tank inerting systems
Hydraulic systems & components
Thermal management
Wheels & brakes



Climate Control

Key Markets

Agriculture
Air conditioning
Construction Machinery
Food & beverage
Industrial machinery
Life sciences
Oil & gas
Precision cooling
Process
Refrigeration
Transportation

Key Products

Accumulators
Advanced actuators
CO_2 controls
Electronic controllers
Filter driers
Hand shut-off valves
Heat exchangers
Hose & fittings
Pressure regulating valves
Refrigerant distributors
Safety relief valves
Smart pumps
Solenoid valves
Thermostatic expansion valves



Electromechanical

Key Markets

Aerospace
Factory automation
Life science & medical
Machine tools
Packaging machinery
Paper machinery
Plastics machinery & converting
Primary metals
Semiconductor & electronics
Textile
Wire & cable

Key Products

AC/DC drives & systems
Electric actuators, gantry robots & slides
Electrohydrostatic actuation systems
Electromechanical actuation systems
Human machine interface
Linear motors
Stepper motors, servo motors, drives & controls
Structural extrusions



Filtration

Key Markets

Aerospace
Food & beverage
Industrial plant & equipment
Life sciences
Marine
Mobile equipment
Oil & gas
Power generation & renewable energy
Process
Transportation
Water Purification

Key Products

Analytical gas generators
Compressed air filters & dryers
Engine air, coolant, fuel & oil filtration systems
Fluid condition monitoring systems
Hydraulic & lubrication filters
Hydrogen, nitrogen & zero air generators
Instrumentation filters
Membrane & fiber filters
Microfiltration
Sterile air filtration
Water desalination & purification filters & system



Fluid & Gas Handling

Key Markets

Aerial lift
Agriculture
Bulk chemical handling
Construction machinery
Food & beverage
Fuel & gas delivery
Industrial machinery
Life sciences
Marine
Mining
Mobile
Oil & gas
Renewable energy
Transportation

Key Products

Check valves
Connectors for low pressure fluid conveyance
Deep sea umbilicals
Diagnostic equipment
Hose couplings
Industrial hose
Mooring systems & power cables
PTFE hose & tubing
Quick couplings
Rubber & thermoplastic hose
Tube fittings & adapters
Tubing & plastic fittings



Hydraulics

Key Markets

Aerial lift
Agriculture
Alternative energy
Construction machinery
Forestry
Industrial machinery
Machine tools
Marine
Material handling
Mining
Oil & gas
Power generation
Refuse vehicles
Renewable energy
Truck hydraulics
Turf equipment

Key Products

Accumulators
Cartridge valves
Electrohydraulic actuators
Human machine interfaces
Hybrid drives
Hydraulic cylinders
Hydraulic motors & pumps
Hydraulic systems
Hydraulic valves & controls
Hydrostatic steering
Integrated hydraulic circuits
Power take-offs
Power units
Rotary actuators
Sensors



Pneumatics

Key Markets

Aerospace
Conveyor & material handling
Factory automation
Life science & medical
Machine tools
Packaging machinery
Transportation & automotive

Key Products

Air preparation
Brass fittings & valves
Manifolds
Pneumatic accessories
Pneumatic actuators & grippers
Pneumatic valves & controls
Quick disconnects
Rotary actuators
Rubber & thermoplastic hose & couplings
Structural extrusions
Thermoplastic tubing & fittings
Vacuum generators, cups & sensors



Process Control

Key Markets

Alternative fuels
Biopharmaceuticals
Chemical & refining
Food & beverage
Marine & shipbuilding
Medical & dental
Microelectronics
Nuclear Power
Offshore oil exploration
Oil & gas
Pharmaceuticals
Power generation
Pulp & paper
Steel
Water/wastewater

Key Products

Analytical Instruments
Analytical sample conditioning products & systems
Chemical injection fittings & valves
Fluoropolymer chemical delivery fittings, valves & pumps
High purity gas delivery fittings, valves, regulators & digital flow controllers
Industrial mass flow meters/ controllers
Permanent no-weld tube fittings
Precision industrial regulators & flow controllers
Process control double block & bleeds
Process control fittings, valves, regulators & manifold valves



Sealing & Shielding

Key Markets

Aerospace
Chemical processing
Consumer
Fluid power
General industrial
Information technology
Life sciences
Microelectronics
Military
Oil & gas
Power generation
Renewable energy
Telecommunications
Transportation

Key Products

Dynamic seals
Elastomeric o-rings
Electro-medical instrument design & assembly
EMI shielding
Extruded & precision-cut, fabricated elastomeric seals
High temperature metal seals
Homogeneous & inserted elastomeric shapes
Medical device fabrication & assembly
Metal & plastic retained composite seals
Shielded optical windows
Silicone tubing & extrusions
Thermal management
Vibration dampening

ENGINEERING YOUR SUCCESS.

Parker Worldwide

Europe, Middle East, Africa

AE - United Arab Emirates, Dubai
Tel: +971 4 8127100
parker.me@parker.com

AT - Austria, Wiener Neustadt
Tel: +43 (0)2622 23501-0
parker.austria@parker.com

AT - Eastern Europe, Wiener Neustadt
Tel: +43 (0)2622 23501 900
parker.easteurope@parker.com

AZ - Azerbaijan, Baku
Tel: +994 50 2233 458
parker.azerbaijan@parker.com

BE/LU - Belgium, Nivelles
Tel: +32 (0)67 280 900
parker.belgium@parker.com

BG - Bulgaria, Sofia
Tel: +359 2 980 1344
parker.bulgaria@parker.com

BY - Belarus, Minsk
Tel: +375 17 209 9399
parker.belarus@parker.com

CH - Switzerland, Etoy
Tel: +41 (0)21 821 87 00
parker.switzerland@parker.com

CZ - Czech Republic, Klecany
Tel: +420 284 083 111
parker.czechrepublic@parker.com

DE - Germany, Kaarst
Tel: +49 (0)2131 4016 0
parker.germany@parker.com

DK - Denmark, Ballerup
Tel: +45 43 56 04 00
parker.denmark@parker.com

ES - Spain, Madrid
Tel: +34 902 330 001
parker.spain@parker.com

FI - Finland, Vantaa
Tel: +358 (0)20 753 2500
parker.finland@parker.com

FR - France, Contamine s/Arve
Tel: +33 (0)4 50 25 80 25
parker.france@parker.com

GR - Greece, Athens
Tel: +30 210 933 6450
parker.greece@parker.com

HU - Hungary, Budaörs
Tel: +36 23 885 470
parker.hungary@parker.com

IE - Ireland, Dublin
Tel: +353 (0)1 466 6370
parker.ireland@parker.com

IT - Italy, Corsico (MI)
Tel: +39 02 45 19 21
parker.italy@parker.com

KZ - Kazakhstan, Almaty
Tel: +7 7273 561 000
parker.easteurope@parker.com

NL - The Netherlands, Oldenzaal
Tel: +31 (0)541 585 000
parker.nl@parker.com

NO - Norway, Asker
Tel: +47 66 75 34 00
parker.norway@parker.com

PL - Poland, Warsaw
Tel: +48 (0)22 573 24 00
parker.poland@parker.com

PT - Portugal, Leca da Palmeira
Tel: +351 22 999 7360
parker.portugal@parker.com

RO - Romania, Bucharest
Tel: +40 21 252 1382
parker.romania@parker.com

RU - Russia, Moscow
Tel: +7 495 645-2156
parker.russia@parker.com

SE - Sweden, Spånga
Tel: +46 (0)8 59 79 50 00
parker.sweden@parker.com

SK - Slovakia, Banská Bystrica
Tel: +421 484 162 252
parker.slovakia@parker.com

SL - Slovenia, Novo Mesto
Tel: +386 7 337 6650
parker.slovenia@parker.com

TR - Turkey, Istanbul
Tel: +90 216 4997081
parker.turkey@parker.com

UA - Ukraine, Kiev
Tel +380 44 494 2731
parker.ukraine@parker.com

UK - United Kingdom, Warwick
Tel: +44 (0)1926 317 878
parker.uk@parker.com

ZA - South Africa, Kempton Park
Tel: +27 (0)11 961 0700
parker.southafrica@parker.com

North America

CA - Canada, Milton, Ontario
Tel: +1 905 693 3000

US - USA, Cleveland
Tel: +1 216 896 3000

Asia Pacific

AU - Australia, Castle Hill
Tel: +61 (0)2-9634 7777

CN - China, Shanghai
Tel: +86 21 2899 5000

HK - Hong Kong
Tel: +852 2428 8008

IN - India, Mumbai
Tel: +91 22 6513 7081-85

JP - Japan, Tokyo
Tel: +81 (0)3 6408 3901

KR - South Korea, Seoul
Tel: +82 2 559 0400

MY - Malaysia, Shah Alam
Tel: +60 3 7849 0800

NZ - New Zealand, Mt Wellington
Tel: +64 9 574 1744

SG - Singapore
Tel: +65 6887 6300

TH - Thailand, Bangkok
Tel: +662 186 7000-99

TW - Taiwan, Taipei
Tel: +886 2 2298 8987

South America

AR - Argentina, Buenos Aires
Tel: +54 3327 44 4129

BR - Brazil, Sao Jose dos Campos
Tel: +55 800 727 5374

CL - Chile, Santiago
Tel: +56 2 623 1216

MX - Mexico, Apodaca
Tel: +52 81 8156 6000

Ed. 03 March 2014

© 2014 Parker Hannifin Corporation.
All rights reserved.

Catalogue 1101/UK - 06/2015

EMEA Product Information Centre
Free phone: 00 800 27 27 5374
(from AT, BE, CH, CZ, DE, DK, EE, ES, FI, FR, IE, IL, IS, IT, LU, MT, NL, NO, PL, PT, RU, SE, SK, UK, ZA)

US Product Information Centre
Toll-free number: 1-800-27 27 537

www.parker.com