

Ball and Plug Valves

Catalog 4121-BV

January 2019

aerospace
climate control
electromechanical
filtration
fluid & gas handling
hydraulics
pneumatics
process control
sealing & shielding

Parker

ENGINEERING YOUR SUCCESS.



B Series Ball Valve with 61 Series Pneumatic Actuator
(Part Number: 6Z-B6LJ2-SS-61AD)



SWB Series (Oval Handle option) Ball Valve
(Part Number: 8F-SWB8L-RT-T-SS-S)

Parker

Parker Hannifin Corporation
Instrumentation Products Division
Jacksonville, AL USA
http://www.parker.com/ipd

Table of Contents

Description ..... **Page**

B Series Ball Valves, 6,000 psi Maximum* **2**
- Two-Way 2
- Three-Way 4

B12 Series Ball Valves, 4,000 psi Maximum* **12**

PR Series Rotary Plug Valves, 3,000 psi Maximum* **14**

MB Series Ball Valves, 3,000 psi Maximum* **18**
- Two-Way In-Line 19
- Two-Way Angle 20
- Three-Way 21
- Four-Way 22
- Five-Way 22

SWB Series Ball Valves, 2,500 psi Maximum* **24**

HB Series Ball Valves, 10,000 psi Maximum* **30**

Pneumatic Actuators **36**
- 61 Model 37
- 62, 63, 64, 65, 66, 68, and 69 Models 37
- 90° Models (AC, AO and AD) 39
- 180° Models (ACX and ADX) 40

Electric Actuators **42**
- 70 Series 42
- 80 Series 44
- 90 Series 45

MAB Series Ball Valves, 20,000 psi Maximum* **50**
- Two-Way 50
- Three-Way 52

Available End Connections **64**

Offer of Sale 65

* Actual pressure rating will be determined by the valve configuration, such as body material, seat material, etc. Contact the factory for more information.

⚠ WARNING – USER RESPONSIBILITY

FAILURE OR IMPROPER SELECTION OR IMPROPER USE OF THE PRODUCTS DESCRIBED HEREIN OR RELATED ITEMS CAN CAUSE DEATH, PERSONAL INJURY AND PROPERTY DAMAGE.

This document and other information from Parker-Hannifin Corporation, its subsidiaries and authorized distributors provide product or system options for further investigation by users having technical expertise.

The user, through its own analysis and testing, is solely responsible for making the final selection of the system and components and assuring that all performance, endurance, maintenance, safety and warning requirements of the application are met. The user must analyze all aspects of the application, follow applicable industry standards, and follow the information concerning the product in the current product catalog and in any other materials provided from Parker or its subsidiaries or authorized distributors.

To the extent that Parker or its subsidiaries or authorized distributors provide component or system options based upon data or specifications provided by the user, the user is responsible for determining that such data and specifications are suitable and sufficient for all applications and reasonably foreseeable uses of the components or systems.

Offer of Sale

The items described in this document are hereby offered for sale by Parker-Hannifin Corporation, its subsidiaries or its authorized distributors. This offer and its acceptance are governed by the provisions stated in the detailed "Offer of Sale" elsewhere in this document or available at www.parker.com/ipdus.

© Copyright 2019 Parker Hannifin Corporation. All Rights Reserved.

Parker Hannifin Corporation
Instrumentation Products Division
Jacksonville, AL USA
http://www.parker.com/ipd

Tel: +45 63 12 83 00 | Email: ps@hymatik.com | www.hymatik.com | Hvidkaervej 27a, DK-5250 Odense SV, Denmark

Two-Way B Series Ball Valves

Introduction

Parker manually, pneumatically, and electrically actuated two-way B Series Ball Valves provide quick 1/4 turn on-off control of fluids utilized in process and instrumentation applications. A broad selection of valve body, seat, and seal materials provide a wide range of pressures and temperatures at which the valve may be used.

Features

- Free floating ball design provides seat wear compensation.
- Available in 316 stainless steel and brass construction. Monel® Alloy 400 and Hastelloy® C-276 construction available upon request.
- Micro-finished ball provides a positive seal.
- Straight through flow path for minimum pressure drop.
- Bi-directional flow.
- Wide variety of US Customary and SI ports.
- 90° actuation.
- Panel mountable.
- Adjustable PTFE stem seal can be maintained in-line.
- Handle indicates flow direction.
- Low operating torques.
- Positive handle stops.
- Color coded handles.
- Optional pneumatic and electric actuation.
- Optional live-loaded PTFE stem seals.
- Optional non-adjustable O-ring stem seals.
- Optional upstream and downstream drain models.
- Optional stainless steel and extended handles.

Specifications

Pressure Ratings:

Material	Pressure Rating	with PTFE Seats
316 Stainless Steel	6000 psig (414 bar)*	1500 psig (103 bar)
Brass	3000 psig (207 bar)	1500 psig (103 bar)
Monel® Alloy 400	3000 psig (207 bar)	1500 psig (103 bar)
Hastelloy® C-276	3000 psig (207 bar)	1500 psig (103 bar)

* B6 Series: 6000 psig rating or 4400 psig (303 bar) CWP
B8 Series: 6000 psig rating or 4000 psig (276 bar) CWP

Pressure Rating and Tubing Selection

For working pressures of A-LOK® and CPI™ tube connections, please see the Instrument Tubing Selection Guide (Bulletin 4200-TS), found in the Technical Section of the Parker Instrumentation Process Control Binder, or the Parker Instrument Fitting Installation Manual (Bulletin 4200-B4).

For working pressures of valves with external or internal pipe threads, please see Catalog 4260, Instrumentation Pipe Fittings.

Materials of Construction

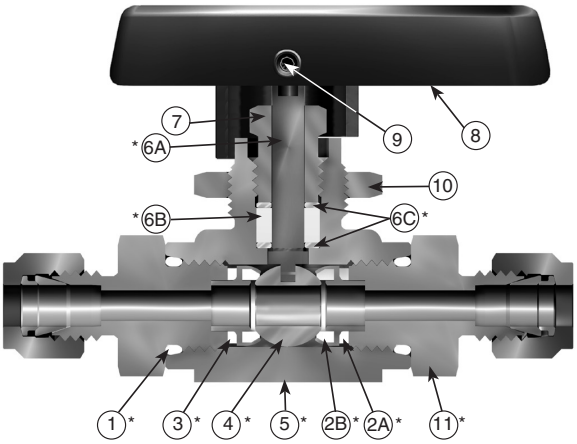

Model Shown: 6A-B6LJ-SSP

Materials of Construction

Item #	Part Description	Stainless Steel	Brass
*1	Connector O-Ring	PTFE**	
*2A	Seat Retainer	ASTM A 276 Type 316	ASTM B 16 Alloy C36000
*2B	Seat	PTFE, PCTFE, PEEK	
*3	Retainer Seal	PTFE**	
*4	Ball	316 Stainless Steel	
*5	Body	ASTM A 351 Grade CF3M	ASTM B 283 Alloy C37700
*6A	Stem	ASTM A 276 Type 316	
*6B	Stem Seal	PTFE**	
*6C	Stem Washer	316 Stainless Steel	
7	Packing Nut	ASTM A 479 Type 316	ASTM B 453 Alloy C34000
8	Handle	Nylon 6/6	
9	Handle Set Screw	Stainless Steel	
10	Panel Nut	316 Stainless Steel	
*11	End Connector	ASTM A 479 Type 316	ASTM B 16 Alloy C36000

* Wetted Parts.
** Optional stem seal and body seal materials are described in the How to Order section.
Lubrication: Perfluorinated Polyether.

Hastelloy® is a registered trademark of Haynes International.
Monel® Alloy 400 is a registered trademark of Special Metals Corporation.

Parker Hannifin Corporation
Instrumentation Products Division
Jacksonville, AL USA
http://www.parker.com/ipd

Dimensions & Flow Data

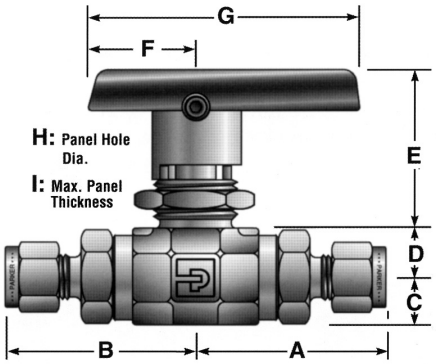

Model Shown:
4A-B6LJ-SSP

Port Size	Basic Part #	Flow Data: Orifice Inch	Orifice mm	Cv	X_T*	End Connections Port 1 Port 2	Dimensions Inches (mm): A†	B†	C	D	E	F	G	H	I
1A	B2L	0.052	1.3	0.06	0.45	1/16" A-LOK®	1.30 (33.0)	1.30 (33.0)	0.33 (8.4)	0.33 (8.4)	0.94 (23.9)	0.75 (19.1)	1.88 (47.8)	0.58 (14.7)	0.13 (3.3)
1Z						1/16" CPI™									
2A		0.093	2.4	0.21	0.47	1/8" A-LOK®	1.36 (34.5)	1.36 (34.5)							
2Z						1/8" CPI™									
2F		0.165	4.2	0.93	0.43	1/8" Female NPT	1.07 (27.2)	1.07 (27.2)							
2M		0.165	4.2	0.93	0.43	1/8" Male NPT	1.18 (30.0)	1.18 (30.0)							
4A		0.165	4.2	0.93	0.43	1/4" A-LOK®	1.48 (37.6)	1.48 (37.6)							
4Z						1/4" CPI™									
4M		0.165	4.2	0.93	0.43	1/4" Male NPT	1.35 (34.3)	1.35 (34.3)							
M3A		0.086	2.2	0.18	0.44	3mm A-LOK®	1.37 (34.8)	1.37 (34.8)							
M3Z						3mm CPI™									
4A	B6L	0.187	4.7	1.04	0.42	1/4" A-LOK®	1.74 (44.2)	1.74 (44.2)	0.42 (10.7)	0.47 (11.9)	1.53 (38.9)	1.00 (25.4)	2.50 (63.5)	0.77 (19.6)	0.25 (6.4)
4Z						1/4" CPI™									
4F		0.250	6.4	2.34	0.29	1/4" Female NPT	1.51 (38.4)	1.51 (38.4)							
4M		0.250	6.4	2.34	0.29	1/4" Male NPT	1.62 (41.1)	1.62 (41.1)							
4V		0.188	4.8	1.04	0.42	1/4" VacuSeal	1.75 (44.5)	1.75 (44.5)							
6A		0.250	6.4	2.34	0.29	3/8" A-LOK®	1.80 (45.7)	1.80 (45.7)							
6Z						3/8" CPI™									
6M		0.250	6.4	2.34	0.29	3/8" Male NPT	1.62 (41.1)	1.62 (41.1)							
M6A		0.187	4.7	1.04	0.42	6mm A-LOK®	1.75 (44.5)	1.75 (44.5)							
M6Z						6mm CPI™									
M8A		0.250	6.4	2.34	0.42	8mm A-LOK®	1.78 (45.2)	1.78 (45.2)							
M8Z						8mm CPI™									
M10A		0.250	6.4	2.34	0.42	10mm A-LOK®	1.81 (46.0)	1.81 (46.0)							
M10Z						10mm CPI™									
6F	B8L	0.406	10.3	6.42	0.37	3/8" Female NPT	1.95 (49.5)	1.95 (49.5)	0.69 (17.5)	0.70 (17.8)	1.74 (44.2)	1.50 (38.1)	4.00 (101.6)	0.90 (22.9)	0.38 (9.7)
8F		0.406	10.3	6.42	0.37	1/2" Female NPT	2.15 (54.6)	2.15 (54.6)							
8A		0.406	10.3	6.42	0.37	1/2" A-LOK®	2.34 (59.4)	2.34 (59.4)							
8Z						1/2" CPI™									
8M		0.406	10.3	6.42	0.37	1/2" Male NPT	2.22 (56.4)	2.22 (56.4)							
8V		0.406	10.3	6.42	0.37	1/2" VacuSeal	2.21 (56.1)	2.21 (56.1)							
12A		0.406	10.3	6.42	0.37	3/4" A-LOK®	2.33 (59.2)	2.33 (59.2)							
12Z						3/4" CPI™									
12F		0.406	10.3	6.42	0.37	3/4" Female NPT	2.25 (57.1)	2.25 (57.1)							
M12A		0.375	9.5	5.57	0.37	12mm A-LOK®	2.33 (59.2)	2.33 (59.2)							
M12Z						12mm CPI™									
M16A		0.406	10.3	6.42	0.37	16mm A-LOK®	2.33 (59.2)	2.33 (59.2)							
M16Z						16mm CPI™									

* Tested in accordance with ISA S75.02. Gas flow will be choked when $P_1 - P_2 / P_1 = x_T$.

† For CPI™ and A-LOK®, dimensions are measured with nuts in the finger tight position

Dimensions in inches/millimeters are for reference only, subject to change.

Parker Hannifin Corporation
Instrumentation Products Division
Jacksonville, AL USA
http://www.parker.com/ipd

Tel: +45 63 12 83 00 | Email: ps@hymatik.com | www.hymatik.com | Hvidkaervej 27a, DK-5250 Odense SV, Denmark

Three-Way B Series Ball Valves

Introduction

Parker manually, pneumatically, and electrically actuated three-way B Series Ball Valves may be used as diverting or selecting valves for fluids utilized in process and instrumentation applications. The standard three-way diverter valve is designed to accept media through the bottom port and direct it out of two outlet ports. When equipped with spring-loaded seats, the three-way valve may be used as a selector valve, alternately accepting media from either of two inlet sources (side ports) and directing it through a single outlet (bottom port).

Features

- Available in 316 stainless steel and brass construction. Monel® Alloy 400 and Hastelloy® C-276 construction available for Diverter Valves upon request.
- Micro-finished ball provides a positive seal.
- Wide variety of US Customary and SI ports.
- 180 degree actuation.
- Panel mountable.
- Adjustable PTFE stem seal can be maintained in-line.
- Handle indicates flow direction.
- Low operating torques.
- Positive handle stops.
- Color coded handles.
- Optional pneumatic and electric actuation.
- Optional live-loaded PTFE stem seals.
- Optional non-adjustable O-ring stem seals.
- Optional stainless steel and extended handles.

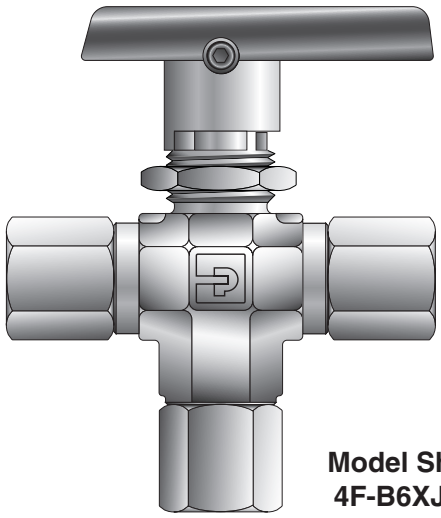

Model Shown:
4F-B6XJ2-BP

Diverter Valve Specifications

Pressure Ratings with bottom port as inlet:

Material	Pressure Rating	with PTFE Seats
316 Stainless Steel	6000 psig (414 bar)*	1500 psig (103 bar)
Brass	3000 psig (207 bar)	1500 psig (103 bar)
Monel® Alloy 400	3000 psig (207 bar)	1500 psig (103 bar)
Hastelloy® C-276	4000 psig (276 bar)	1500 psig (103 bar)

* B6 Series: 6000 psig rating or 4400 psig (303 bar) CWP
B8 Series: 6000 psig rating or 4000 psig (276 bar) CWP

Pressure Rating and Tubing Selection

For working pressures of A-LOK® and CPI™ tube connections,

Pressure Rating with side ports as inlet:

150 psig (10 bar)

Selector Valve Specifications

(Spring Loaded – B6 and B8 models only)

Pressure Rating with bottom port as inlet:

316 Stainless Steel..... 6000 psig (414 bar) CWP*
Brass .....3000 psig (207 bar) CWP

Pressure Rating with side ports as inlet:

316 Stainless Steel and Brass....3000 psig (207 bar) CWP

Pressure Rating and Tubing Selection

For working pressures of A-LOK® and CPI™ tube connections, please see the Instrument Tubing Selection Guide (Bulletin 4200-TS), found in the Technical Section of the Parker Instrumentation Process Control Binder, or the Parker Instrument Fitting Installation Manual (Bulletin 4200-B4).

For working pressures of valves with external or internal pipe threads, please see Catalog 4260, Instrumentation Pipe Fittings.

Parker Hannifin Corporation
Instrumentation Products Division
Jacksonville, AL USA
http://www.parker.com/ipd

Diverter Valve

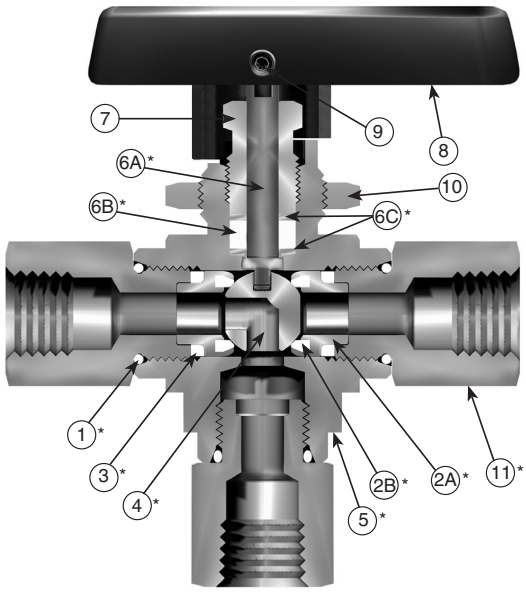

Model Shown: 4F-B6XJ-SSP

Selector Valve

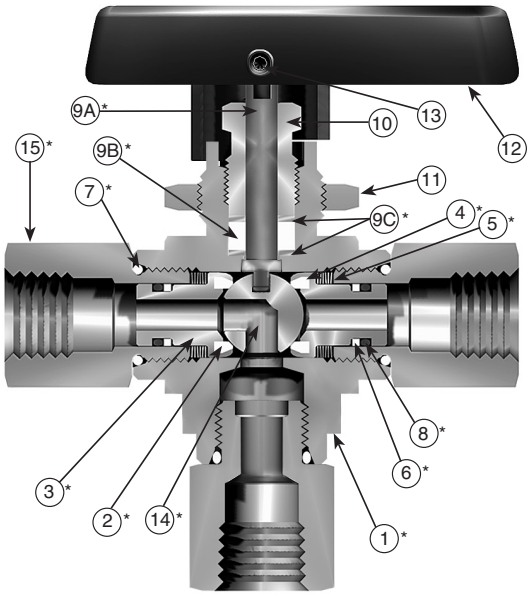

Model Shown: 4F-B6XS2-SSP

Materials of Construction

Item #	Part Description	Stainless Steel	Brass
*1	Connector O-Ring	PTFE**	
*2A	Seat Retainer	ASTM A 276 Type 316	ASTM B 16 Alloy C36000
*2B	Seat	PTFE, PCTFE, PEEK	
*3	Retainer Seal	PTFE**	
*4	Ball	316 Stainless Steel	
*5	Body	ASTM A 351 Grade CF3M	ASTM B 283 Alloy C37700
*6A	Stem	ASTM A 276 Type 316	
*6B	Stem Seal	PTFE**	
*6C	Stem Washer	316 Stainless Steel	
7	Packing Nut	ASTM A 479 Type 316	ASTM B 453 Alloy C34000
8	Handle	Nylon 6/6	
9	Handle Set Screw	Stainless Steel	
10	Panel Nut	316 Stainless Steel	
*11	End Connector	ASTM A 479 Type 316	ASTM B 16 Alloy C36000

* Wetted Parts.
** Optional stem seal and body seal materials are described in the How to Order section.
Lubrication: Perfluorinated Polyether.

Materials of Construction

Item #	Part Description	Stainless Steel	Brass
1	Body	ASTM A 351 Grade CF3M	ASTM B 283 Alloy C37700
*2	Seat	PTFE, PEEK	
*3	Seat Retainer	ASTM A 276 Type 316	
4	Spring	Stainless Steel	
*5	Seat Retainer Washer	316 Stainless Steel	
*6	Back-up Ring	PTFE	
*7	Connector O-Ring	PTFE**	
*8	Seat Retainer O-Ring	Fluorocarbon Rubber**	
*9A	Stem	ASTM A 276 Type 316	
*9B	Stem Seal	PTFE*	
*9C	Stem Washer	316 Stainless Steel***	
10	Packing Nut	ASTM A 479 Type 316	ASTM B 453 Alloy C34000
11	Panel Nut	316 Stainless Steel	
12	Handle	Nylon 6/6	
13	Handle Set Screw	Stainless Steel	
*14	Ball	316 Stainless Steel	
*15	End Connector	ASTM A 479 Type 316	ASTM B 16 Alloy C36000

* Wetted Parts.
** Optional stem seal and body seal materials are described in the How to Order section.
Lubrication: Perfluorinated Polyether.
***The lower stem washer material is PEEK for B8 Selector Valves.
Lubrication: Perfluorinated polyether.

Parker Hannifin Corporation
Instrumentation Products Division
Jacksonville, AL USA
http://www.parker.com/ipd

Tel: +45 63 12 83 00 | Email: ps@hymatik.com | www.hymatik.com | Hvidkaervej 27a, DK-5250 Odense SV, Denmark

Three-Way B Series Ball Valves

B

Dimensions & Flow Data

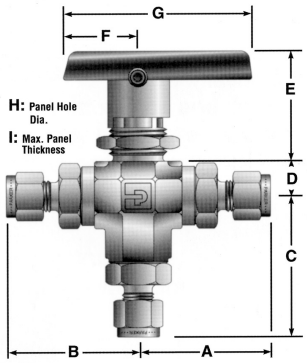

Model Shown:
4Z-B6XSPKR-V-SSP

Port Size	Basic Part #	Flow Data: Orifice Inch	Orifice mm	Cv	X_T*	End Connections: Port 1 / Port 2 / Port 3	Dimensions Inches (mm): A†	B†	C	D	E	F	G	H	I
1A	B2X	0.052	1.3	0.06	0.56	1/16" A-LOK®	1.30 (33.0)	1.30 (33.0)	1.39 (35.3)	0.33 (8.4)	0.94 (23.9)	0.75 (19.1)	1.88 (47.8)	0.58 (14.7)	0.13 (3.3)
1Z						1/16" CPI™									
2A		0.093	2.4	0.21	0.64	1/8" A-LOK®	1.36 (34.5)	1.36 (34.5)	1.45 (36.8)						
2Z						1/8" CPI™									
2F		0.165	4.2	0.63	0.59	1/8" Female NPT	1.07 (27.2)	1.07 (27.2)	1.15 (29.2)						
2M		0.165	4.2	0.63	0.59	1/8" Male NPT	1.18 (30.0)	1.18 (30.0)	1.26 (32.0)						
4A		0.165	4.2	0.63	0.59	1/4" A-LOK®	1.48 (37.6)	1.48 (37.6)	1.56 (39.6)						
4Z						1/4" CPI™									
4M		0.165	4.2	0.63	0.59	1/4" Male NPT	1.35 (34.3)	1.35 (34.3)	1.43 (36.3)						
M3A		0.086	2.2	0.18	0.63	3mm A-LOK®	1.37 (34.8)	1.37 (34.8)	1.45 (36.8)						
M3Z						3mm CPI™									
4A	B6X	0.187	4.7	0.70	0.69	1/4" A-LOK®	1.74 (44.2)	1.74 (44.2)	1.88 (47.8)	0.47 (11.9)	1.53 (38.9)	1.00 (25.4)	2.50 (63.5)	0.77 (19.6)	0.25 (6.4)
4Z						1/4" CPI™									
4F		0.196	5.0	0.87	0.74	1/4" Female NPT	1.51 (38.4)	1.51 (38.4)	1.65 (41.9)						
4M		0.196	5.0	0.87	0.74	1/4" Male NPT	1.62 (41.1)	1.62 (41.1)	1.76 (44.7)						
4V		0.188	4.8	0.70	0.69	1/4" VacuSeal	1.75 (35.1)	1.75 (35.1)	1.89 (37.1)						
6A		0.196	5.0	0.87	0.74	3/8" A-LOK®	1.80 (45.7)	1.80 (45.7)	1.94 (49.3)						
6Z						3/8" CPI™									
6M		0.196	5.0	0.87	0.74	3/8" Male NPT	1.62 (41.1)	1.62 (41.1)	1.76 (44.7)						
M6A		0.187	4.7	0.70	0.69	6mm A-LOK®	1.75 (44.5)	1.75 (44.5)	1.88 (47.8)						
M6Z						6mm CPI™									
M8A		0.196	5.0	0.87	0.74	8mm A-LOK®	1.78 (45.2)	1.78 (45.2)	1.91 (48.5)						
M8Z						8mm CPI™									
M10A		0.196	5.0	0.87	0.74	10mm A-LOK®	1.81 (46.0)	1.81 (46.0)	1.95 (49.5)						
M10Z						10mm CPI™									
6F	B8X	0.406	10.3	3.62	0.64	3/8" Female NPT	1.95 (49.5)	1.95 (49.5)	2.29 (58.2)	0.70 (17.8)	1.74 (44.2)	1.50 (38.1)	4.00 (101.6)	0.90 (22.9)	0.38 (9.7)
8A		0.406	10.3	3.62	0.64	1/2" A-LOK®	2.34 (59.4)	2.34 (59.4)	2.68 (68.1)						
8Z						1/2" CPI™									
8F		0.406	10.3	3.62	0.64	1/2" Female NPT	2.15 (54.6)	2.15 (54.6)	2.49 (63.2)						
8M		0.406	10.3	3.62	0.64	1/2" Male NPT	2.22 (56.4)	2.22 (56.4)	2.59 (65.8)						
8V		0.406	10.3	3.62	0.64	1/2" VacuSeal	2.21 (56.1)	2.21 (56.1)	2.55 (65.0)						
12A		0.406	10.3	3.62	0.64	3/4" A-LOK®	2.33 (59.2)	2.33 (59.2)	2.68 (68.1)						
12Z						3/4" CPI™									
12F		0.406	10.3	6.42	0.37	3/4" Female NPT	2.25 (57.1)	2.25 (57.1)	2.59 (65.8)						
M12A		0.375	9.5	3.46	0.62	12mm A-LOK®	2.33 (59.2)	2.33 (59.2)	2.67 (67.8)						
M12Z						12mm CPI™									
M16A		0.406	10.3	3.62	0.64	16mm A-LOK®	2.33 (56.9)	2.33 (56.9)	2.67 (65.5)						
M16Z						16mm CPI™									

* Tested in accordance with ISA S75.02. Gas flow will be choked when P_1- P_2 / P_1= x_T.
† For CPI™ and A-LOK®, dimensions are measured with nuts in the finger tight position

Dimensions in inches/millimeters are for reference only, subject to change.

Parker Hannifin Corporation
Instrumentation Products Division
Jacksonville, AL USA
http://www.parker.com/ipd

Pressure vs. Temperature

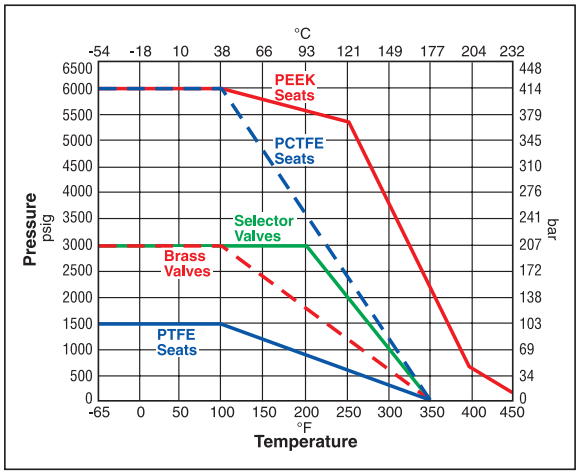

Note: To determine MPa, multiply bar by 0.1

Note: This Pressure versus Temperature chart reflects the maximum temperature range of indicated materials.

When combining seat and seal materials, the most restrictive temperature rating of the seats or seals becomes the limiting factor on valve temperature range.

Elastomeric stem packing and seals are recommended if the application subjects the valve to thermal cycling.

Please see pages 2 and 4 for maximum pressure ratings.

Temperature Ratings:

PTFE ..... -65°F to 350°F (-54°C to 177°C)
PCTFE..... -65°F to 350°F (-54°C to 177°C)
PEEK..... -65°F to 450°F (-54°C to 232°C)
Nitrile Rubber..... -40°F to 250°F (-40°C to 121°C)
Fluorocarbon Rubber..... -15°F to 450°F (-26°C to 232°C)
Ethylene Propylene Rubber.... -65°F to 300°F (-54°C to 149°C)
Highly Fluorinated
Fluorocarbon Rubber ..... -15°F to 200°F (-26°C to 93°C)

Flow Calculations with 1000 psig (69 bar) Inlet Pressure

Two-Way

Valve Series	Max. Cv	Pressure Drop ΔP		Water @ 60°F (16°C)		Air @ 60°F (16°C)	
		psig	bar	gpm	m³/hr	scfm	m³/hr
B2L	0.93	10	0.7	2.9	0.7	92.4	156.2
		50	3.5	6.6	1.5	200.3	338.3
		100	6.9	9.3	2.1	272.0	458.9
B6L	2.34	10	0.7	7.4	1.7	231.7	391.5
		50	3.5	16.5	3.8	494.2	834.7
		100	6.9	23.4	5.3	657.0	1107.9
B8L	6.42	10	0.7	20.3	4.6	637.1	1076.8
		50	3.5	45.4	10.3	1373.6	2320.3
		100	6.9	64.2	14.6	1852.3	3124.8

Three-Way

Valve Series	Max. Cv	Pressure Drop ΔP		Water @ 60°F (16°C)		Air @ 60°F (16°C)	
		psig	bar	gpm	m³/hr	scfm	m³/hr
B2X	0.63	10	0.7	2.0	0.5	62.7	106.0
		50	3.5	4.5	1.0	137.1	231.7
		100	6.9	6.3	1.4	188.4	317.9
B6X	0.87	10	0.7	2.8	0.6	86.7	146.6
		50	3.5	6.2	1.4	190.5	321.8
		100	6.9	8.7	2.0	263.2	444.4
B8X	3.62	10	0.7	11.5	2.6	360.6	609.5
		50	3.5	25.6	5.9	789.7	1343.5
		100	6.9	36.2	8.2	1087.4	1836.6

Parker Hannifin Corporation
Instrumentation Products Division
Jacksonville, AL USA
http://www.parker.com/ipd

Tel: +45 63 12 83 00 | Email: ps@hymatik.com | www.hymatik.com | Hvidkaervej 27a, DK-5250 Odense SV, Denmark

How to Order

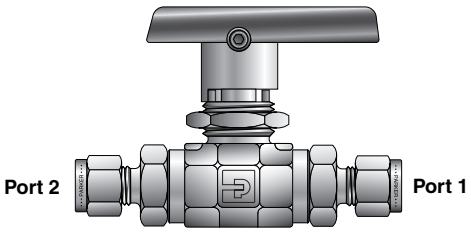

Model Shown: 6A-B6LJ2-SSP

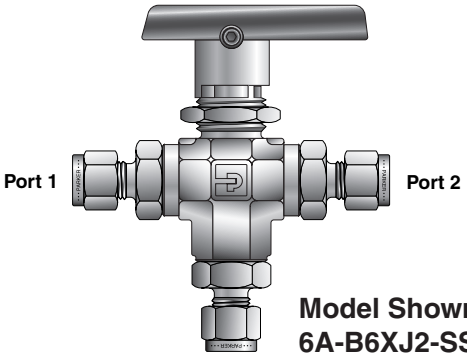

Model Shown: 6A-B6XJ2-SSP

Port 1	Port 2	Port 3	–	Valve Series	Seat Material	–	Seal Material	–	Body Material

Ports 1, 2 and 3		Valve Series	Seat Material		Seal Material		Body Material	
1A	1/16" A-LOK®	**B2L**	**J**	PTFE	**(Blank)**	PTFE	**SSP**	316 Stainless Steel
1Z	1/16" CPI™	**B2X**	**J2**	PCTFE	**V**	Fluorocarbon Rubber	**BP**	Brass
2A	1/8" A-LOK®				**EPR**	Ethylene Propylene Rubber	**MP**	Monel® Alloy 400
2Z	1/8" CPI™				**BN**	Nitrile Rubber	**HCP**	Hastelloy® C-276
2F	1/8" Female NPT				**KZ**	Highly Fluorinated Fluorocarbon Rubber		
2M	1/8" Male NPT				**LT**	Live-Loaded PTFE Packing with PTFE Seals		
4A	1/4" A-LOK®				**VLT**	Live-Loaded PTFE Packing with Fluoro carbon Rubber Seals		
4Z	1/4" CPI™				**EPRLT**	Live-Loaded PTFE Packing with Ethylene Propylene Rubber Seals		
4M	1/4" Male NPT				**BNLT**	Live-Loaded PTFE Packing with Nitrile Rubber Seals		
M3A	3mm A-LOK				**KZLT**	Live-Loaded PTFE Packing with Highly Flourinated Fluoro-carbon Rubber Seals		
M3Z	3mm CPI™							
4A	1/4" A-LOK®	**B6L**	**J**	PTFE				
4Z	1/4" CPI™	**B6X**	**J2**	PCTFE				
4F	1/4" Female NPT		**S2**	Spring-Loaded PCTFE				
4M	1/4" Male NPT		**PKR**	PTFE Lubricated PEEK				
4V	1/4" VacuSeal		**SPKR**	Spring-Loaded PTFE Lubricated PEEK				
6A	3/8" A-LOK®							
6Z	3/8" CPI™							
6M	3/8" Male NPT							
M6A	6mm A-LOK®							
M6Z	6mm CPI™							
M8A	8mm A-LOK®							
M8Z	8mm CPI™							
M10A	10mm A-LOK®							
M10Z	10mm CPI™							
6F	3/8" Female NPT	**B8L**	**J**	PTFE				
8A	1/2" A-LOK®	**B8X**	**J2**	PCTFE				
8Z	1/2" CPI™		**S2**	Spring-Loaded PCTFE				
8F	1/2" Female NPT		**PKR**	PTFE Lubricated PEEK				
8M	1/2" Male NPT		**SPKR**	Spring-Loaded PTFE Lubricated PEEK				
8V	1/2" VacuSeal							
12Z	3/4" CPI™							
12F	3/4" Female NPT							
M12A	12mm A-LOK®							
M12Z	12mm CPI™							
M16A	16mm A-LOK®							
M16Z	16mm CPI™							

Notes:
1. Panel Mounting Nut supplied with each valve. Various port combinations are available.
2. See How to order.
3. VacuSeal is not available in Brass.
4. 12F (3/4" Female NPT) not panel mountable.

See examples on page 9. See pages 10 and 11 for information about How to Order Options and Maintenance Kits.

How to Order (Continued)

Examples: Two-Way Valves

4Z	4F	–	B6L	J	–	BP
Port 1	Port 2		Valve Series	Seat Material	Seal Material	Body Material

Describes a B6L ball valve with a 1/4" CPI™ end connection for port 1 and a 1/4" female NPT end connection for port 2, PTFE seats, PTFE stem and body seals, brass construction, with a panel mounting nut.

8A	*	–	B8L	J	–	BN	–	SSP
Port 1	Port 2		Valve Series	Seat Material		Seal Material		Body Material

Describes a B8L ball valve with a 1/2" A-LOK® end connections for ports 1 and 2, PTFE seats, Nitrile rubber stem and body seals, stainless steel construction, with a panel mounting nut.
*** Note:** If ports 1 and 2 are the same, eliminate the port 2 designator.

M3A	*	–	B2L	J2	–	VLT	–	SSP
Port 1	Port 2		Valve Series	Seat Material		Seal Material		Body Material

Describes a B2L ball valve with 3mm A-LOK® end connections for ports 1 and 2, PCTFE seats, fluorocarbon rubber body seals, PCTFE packing, stainless steel construction, with a panel mounting nut.
*** Note:** If ports 1 and 2 are the same, eliminate the port 2 designator.

Examples: Three-Way Diverter Valves

4Z	4Z	4F	–	B6X	J2	–	V	–	BP
Port 1	Port 2	Port 3		Valve Series	Seat Material		Seal Material		Body Material

Describes a B6X ball valve with 1/4" CPI™ end connections for side ports 1 and 2, 1/4" female NPT end connection for bottom port 3, PCTFE seats, fluorocarbon rubber stem and body seals, brass construction, and a panel mounting nut.

2Z	*	*	–	B2X	J	–	SSP
Port 1	Port 2	Port 3		Valve Series	Seat Material	Seal Material	Body Material

Describes a B2X ball valve with 1/8" CPI™ end connections for ports 1, 2, and 3, PTFE seats, PTFE stem and body seals, stainless steel construction, and a panel mounting nut.
*** Note:** If ports 1, 2, and 3 are the same, eliminate the port 2 and port 3 designators.

Examples: Three-Way Selector Valves

4M	4M	4F	–	B6X	S2	–	EPR	–	SSP
Port 1	Port 2	Port 3		Valve Series	Seat Material		Seal Material		Body Material

Describes a B6X ball valve with 1/4" male NPT end connections for side ports 1 and 2, 1/4" female NPT end connection for bottom port 3, spring-loaded PCTFE seats, ethylene propylene rubber stem and body seals, stainless steel construction, and a panel mounting nut.

8A	*	*	–	B8X	S2	–	BNLT	–	SSP
Port 1	Port 2	Port 3		Valve Series	Seat Material		Seal Material		Body Material

Describes a B8X ball valve with 1/2" A-LOK® end connections for ports 1, 2, and 3, spring-loaded PCTFE seats, Nitrile rubber body seals, live loaded PTFE packing, stainless steel construction, and a panel mounting nut.
*** Note:** If ports 1, 2, and 3 are the same, eliminate the port 2 and port 3 designators.

Parker Hannifin Corporation
Instrumentation Products Division
Jacksonville, AL USA
http://www.parker.com/ipd

Tel: +45 63 12 83 00 | Email: ps@hymatik.com | www.hymatik.com | Hvidkaervej 27a, DK-5250 Odense SV, Denmark

Options

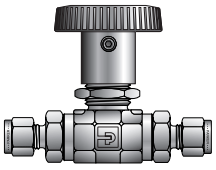

Round Handle

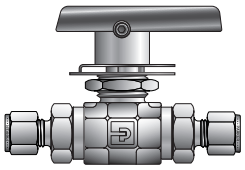

Lock-Out Handle

Actuator Options

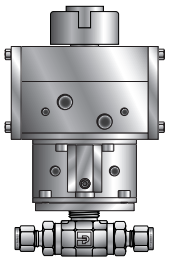

Double Acting (61AD)
Pneumatic Actuator

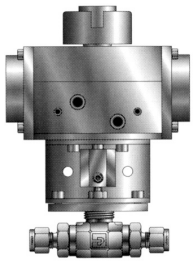

Spring Returns (61AC & AO)
Pneumatic Actuator



70, 80 & 90 Series
Electric Actuator

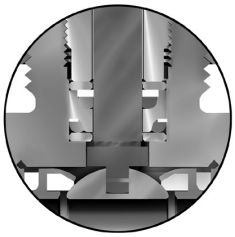

O-Ring Stem Seals

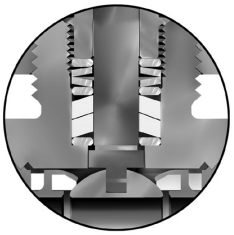

Live-Loaded Stem Seals

Two-Way Valve Upstream and Downstream Drain Options

For draining upstream or downstream media on two-way valves at pressures below 150 psig (10 bar), add the suffix **–VBU** (Vented Ball Upstream) or **–VBD** (Vented Ball Downstream). Example: 4Z-B6LJ-SSP-VBU. This option is also suitable to vent the ball cavity in vacuum applications. For pressures up to 3,000 psig (207 bar), select **S2** or **SPKR** spring-loaded seats and add the suffix **–VBU** (Vented Ball Upstream) or **–VBD** (Vented Ball Downstream). Example: 4Z-B6L**S2**-SSP-**VBU**

Note: VBD and VBU are ball cavity vents only.

Parker Hannifin Corporation
Instrumentation Products Division
Jacksonville, AL USA
http://www.parker.com/ipd

How to Order Options

	Examples
Pneumatic Actuators: For detailed actuator information, refer to the Pneumatic Actuators section of this catalog.	
For factory assembly, add the actuator part number as the suffix to the valve part number.	2F-B2XJ2-V-SSP-**61ACX-2**
For field installation, specify the actuator desired.	**61ACX-2**
The appropriate mounting hardware may be obtained by adding the valve series and actuator size to the prefix **MK-**.	**MK-B2X-61**
Electric Actuators: For detailed actuator information refer to the Electric Actuators section of this catalog.	
For factory assembly, add the actuator part number as the suffix to the valve part number.	8A-B8LPKR-BN-SS-**71A**
For field installation, specify the actuator desired.	**71A**
The appropriate mounting hardware may be obtained by adding the valve series and actuator series to the prefix MK-.	MK-**B8L-70**
Oxygen Cleaning: Add the suffix **-C3** to the end of the part number to receive valves cleaned and asembled for oxygen service in accordance with Parker Specification ES8003.	4A-B6LJ-EPR-SSP-**C3**

How to Order Maintenance Kits

Lock-Out Devices: For field installation, simply substitute the correct valve series number after LD.	**LD-B8L**
Metal Oval Handles: NOTE: Not available in size 2.	**B8-OVAL-SS-HANDLE-ASSY**
Colored Round Handle Kits: Series-Handle-Color. (Example consists of a green handle and handle screw.) **NOTE:** Round handles are not recommended for B8 valves with PEEK seats.	**B6-RD-HANDLE-GREEN**
Stainless Steel Handle Kits: Series-Handle-SS. (Example consists of a stainless steel handle and handle screw.)	**B8-HANDLE-SS**
Colored Lever Handle Kits: Series-Handle-Color. Black is standard. B = Blue, G = Green, R = Red (Example consists of a red handle and handle screw.)	**B6-HANDLE-RED**

Two-way Valve Seal Kits:

PTFE Stem Seal Kits: Kit-Valve Series and Seat Material-Body Material. (Consists of one PTFE stem seal, two stem seal washers, two encapsulated PTFE ball seats, two end connector PTFE seals, one assembly mandrel, maintenance instructions.)	**KIT-B2LJ-SS**
Elastomeric Stem Seal Kits: Kit-Valve Series and Seat Material-Elastomer Material-Body Material. (Consists of two stem seal Nitrile rubber O-rings, two PTFE back-up rings, two stem seal washers, two encapsulated PCTFE ball seats, two end connector Nitrile rubber O-ring seals, two seat retainer Nitrile rubber O-ring seals, stem glands and maintenance instructions.)	**KIT-B2LJ2-BN-SS**

Diverter Valve Seal Kits:

PTFE Stem Seal Kits: Kit-Valve Series and Seat Material-Body Material. (Consists of one PTFE stem seal, two stem seal washers, two encapsulated PEEK ball seats, three end connector PTFE seals, one assembly mandrel, maintenance instructions.)	**KIT-B6XPKR-SS**
Elastomeric Stem Seal Kits: Kit-Valve Series and Seat Material-Elastomer-Body Material. (Consists of two stem seal fluorocarbon rubber O-rings, two PTFE back-up rings, two stem seal washers, two encapsulated PTFE ball seats, three end connector fluorocarbon rubber O-ring seals, two seat retainer fluorocarbon rubber O-ring seals, stem glands and maintenance instructions.)	**KIT-B6XJ-V-SS**

Selector Valve Seal Kits:

PTFE Stem Seal Kits: Kit-Valve Series and Seat Material. (Consists of one PTFE stem seal, two stem seal washers, two encapsulated spring-loaded PCTFE ball seats, two seat retainer fluorocarbon rubber O-rings, three end connector PTFE seals, one assembly mandrel, maintenance instructions.)	**KIT-B6XS2-SS**
Elastomeric Stem Seal Kits: Kit-Valve Series and Seat Material-Elastomer. (Consists of two stem seal fluorocarbon rubber O-rings, two PTFE back-up rings, two stem seal washers, two encapsulated spring-loaded PEEK ball seat assemblies, three end connector fluorocarbon O-ring seals, two seat retainer fluorocarbon rubber O-rings, stem glands and maintenance instructions.)	**KIT-B6XSPKR-V-SS**

Live-loaded Seal Kits:

Kit-Valve Series and Seat Material-Seal Material-Body Material. (Consists of one live-loaded PTFE stem packing, two packing springs (B8 series valves have four springs), three packing washers, two PCTFE encapsulated ball seats, two Nitrile rubber end connector O-ring seals, two Nitrile rubber seat retainer O-ring seals, maintenance instructions.)	**KIT-B6LJ2-BNLT-SS**

Parker Hannifin Corporation
Instrumentation Products Division
Jacksonville, AL USA
http://www.parker.com/ipd

Tel: +45 63 12 83 00 | Email: ps@hymatik.com | www.hymatik.com | Hvidkaervej 27a, DK-5250 Odense SV, Denmark

B12 Series Ball Valves

Introduction

Parker's manually and pneumatically actuated two-way B12 Series Ball Valves provide quick 1/4 turn on-off control of fluids used in process and instrumentation applications.

Features

- Blow-out resistant stem
- Spring-loaded ball seats
- Bi-directional flow
- Stainless steel construction
- Micro-finished ball provides positive seal
- Handle indicates flow direction
- Color coded handles
- Low operating torques
- Optional pneumatic actuation
- 100% factory tested

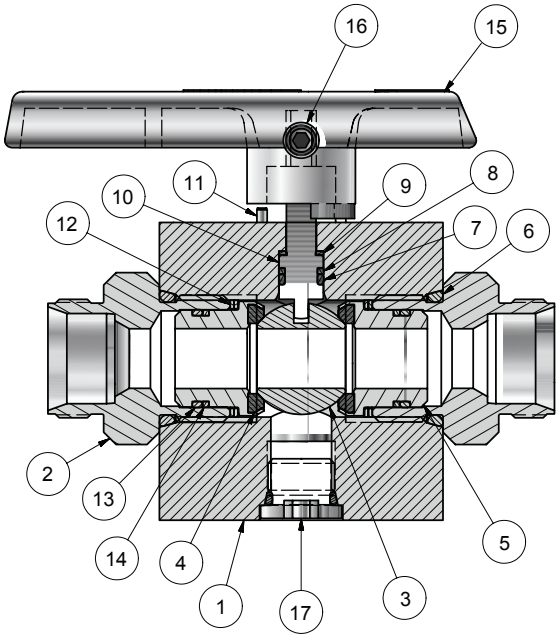

Specifications

Pressure Rating	4,000 psig (276 bar) CWP
Temperature Rating	-65°F to 350°F (-54°C to 177°C)
Orifice	0.50" (12.7mm)
Flow Coefficient	$C_V = 9.09$ $X_T = 0.32$

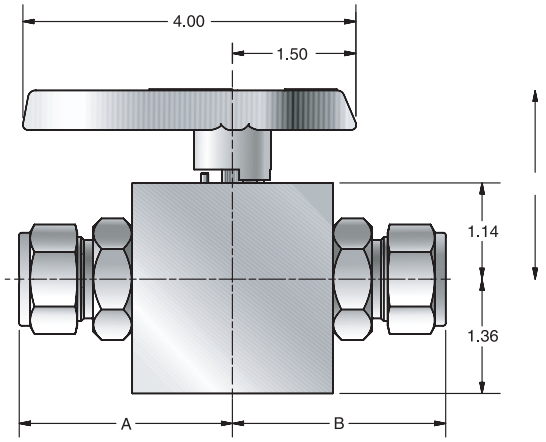

Dimensions

Port Size	Valve Series	End Connections		Dimensions Inch (mm)	
		Port 1	Port 2	A	B
12A	B12L	3/4" A-LOK®		25.3 (64.3)	25.3 (64.3)
12Z		3/4" CPI™			
12F		3/4" Female NPT		24.7 (62.7)	24.7 (62.7)
16A		1" A-LOK®			
16Z		1" CPI™		2.69 (68.3)	2.69 (68.3)
16F		1" Female NPT			

Dimensions in inches/millimeters are for reference only, subject to change.

Materials of Construction

Item #	Part	Material
	Body	ASTM A 479 Type 316
	End Connector	ASTM A 479 Type 316
	Ball	ASTM A 276 Type 316
	Seat	PCTFE
	Seat Retainer	ASTM A 276 Type 316
	Connector O-Ring	Optional Elastomers
	Stem O-Ring	Optional Elastomers
	Back-Up Ring (Stem)	PTFE
	Stem Washer	PEEK
	Stem	ASTM A 276 Type 316
	Handle Pin	ASTM A 479 Type 316
	Seat Spring	ASTM A 313 Type 631
	Seat Retainer O-Ring	Optional Elastomers
	Back-up Ring (Seat Retainer)	PTFE
	Handle	Nylon 6/6
	Handle Set Screw	316 Stainless Steel
	Plug	316 Stainless Steel

Lubrication: Perfluorinated Polyether

Parker Hannifin Corporation
Instrumentation Products Division
Jacksonville, AL USA
http://www.parker.com/ipd

Tel: +45 63 12 83 00 | Email: ps@hymatik.com | www.hymatik.com | Hvidkaervej 27a, DK-5250 Odense SV, Denmark

How to Order

The correct part number is easily derived from the following example and ordering chart. The six product characteristics required are coded as shown in the chart.

The example below describes a B12 Series, two-way, in-line pattern ball valve with 3/4" CPI™ compression end connections for ports 1 and 2, spring loaded PCTFE seats, fluorocarbon rubber seals, and stainless steel body construction.

Note: If ports 1 and 2 are the same, eliminate the port 2 designator.

Example: 12Z – B12LS2 – V – SS

Port 1*	Port 2*	Valve Series	Seat Material	Seal Material	Body Material
12Z	12Z	B12L	S2	V	SS

Ports 1 and 2		Valve Series	Seat Material		Seal Material		Body Material	
12F	3/4" Female NPT	**B12L**	**S2**	Spring-Loaded PCTFE	**BN**	Nitrile Rubber	**SS**	Stainless Steel
12A	3/4" A-LOK®				**V**	Fluorocarbon Rubber		
12Z	3/4" CPI™				**EPR**	Ethylene Propylene Rubber		
16F	1" Female NPT				**KZ**	Highly Fluorinated Fluorocarbon Rubber		
16A	1" A-LOK®							
16Z	1" CPI™							

* If ports 1 and 2 are the same, eliminate the port 2 designator.

Pressure vs. Temperature

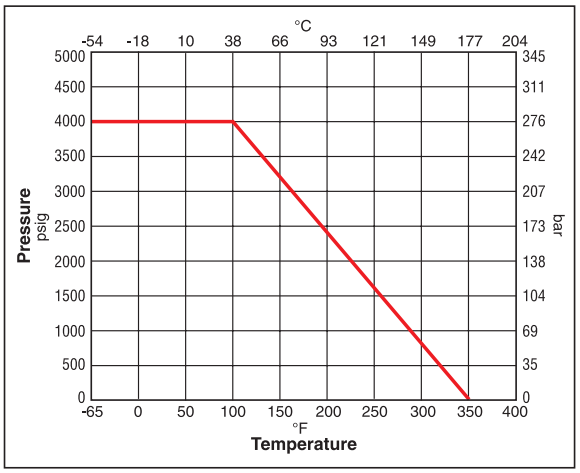

Parker Hannifin Corporation
Instrumentation Products Division
Jacksonville, AL USA
http://www.parker.com/ipd

Tel: +45 63 12 83 00 | Email: ps@hymatik.com | www.hymatik.com | Hvidkaervej 27a, DK-5250 Odense SV, Denmark

PR Series Rotary Plug Valves

Introduction

Parker PR Series Plug Valves provide positive leak tight shut-off, high flow capacity, and quick quarter-turn operation in a compact attractive package. The patented blow-out resistant seat design offers reliable sealing technology at all operating pressures. In addition to on-off actuation, the plug design allows forward flow throttling. A selection of valve seat and seal materials may be chosen for media compatibility and performance over a broad range of temperatures. The pressure balanced atmospheric seals are backed by PTFE rings to enhance their performance and increase cycle life.

Features

- Patented blow-out resistant seat design
- Pressures up to 3,000 psig (207 bar) CWP
- Quarter-turn operation
- Reliable simple design
- Straight-through flow
- Stainless steel and brass construction
- Nitrile, ethylene propylene, fluorocarbon, and highly fluorinated fluorocarbon rubber seats and seals
- PTFE back-up rings on atmospheric seals
- Low operating torque
- Minimum pressure drop
- Throttling capability
- Positive handle stops
- Color coded fracture resistant nylon handles with directional flow indication
- Easy to service
- 100% factory tested
- Options include lock-out devices, downstream venting, and both stainless steel and T-bar handles

Open



Closed

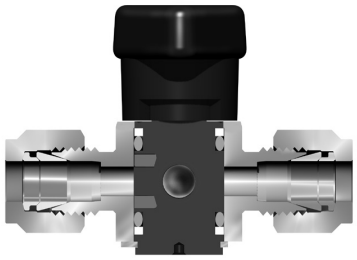

Model Shown: 4A-PR4-VT-SS

U.S. Patent 5,234,193

Specifications

Pressure Ratings:

Normal Flow Direction: 3000 psig (207 bar) CWP

Reverse Flow Direction: 150 psig (10 bar)

Downstream Vent Option: 150 psig (10 bar)

Parker Hannifin Corporation
Instrumentation Products Division
Jacksonville, AL USA
http://www.parker.com/ipd

Materials of Construction

Item #	Part Description	Stainless Steel	Brass
1	Body	ASTM A 479 Type 316	ASTM B 16 Alloy C36000
2	Plug*	ASTM A 479 Type 316	ASTM B 16 Alloy C36000
3	Seat**	Fluorocarbon Rubber	
4	O-Ring Seals**	Fluorocarbon Rubber	
5	Back-up Rings	PTFE	
6	Handle	Nylon 6/6	
7	Handle Pin	316 Stainless Steel	
8	Body Pin	316 Stainless Steel (not shown)	
9	Retaining Ring	316 Stainless Steel	

* Plugs are PTFE color coated – Stainless steel plugs are black; Brass plugs are brown.
** Optional Seat and O-ring seal materials are available.
Lubrication: Perfluorinated polyether

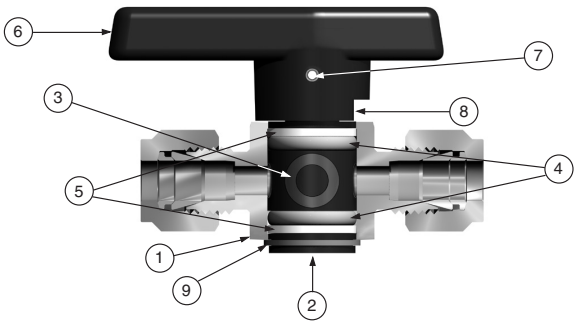

Model Shown: 4A-PR4-VT-SS

PR

Pressure vs. Temperature

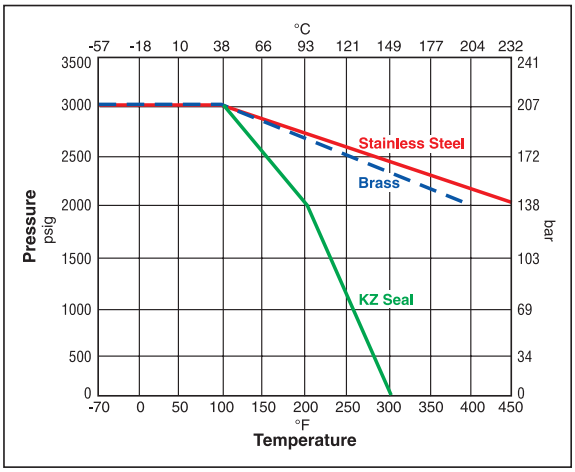

Note: To determine MPa, multiply bar by 0.1

Note: This Pressure versus Temperature chart reflects the maximum temperature range of indicated body materials.

The temperature rating of the elastomer seals become the limiting factor on temperature range.

Temperature Ratings

Material	Temperature Rating
Nitrile Rubber	-30°F to 225°F (-34°C to 107°C)
Fluorocarbon Rubber	-10°F to 450°F (-23°C to 232°C)
Highly Fluorinated Fluorocarbon Rubber	-10°F to 300°F (-23°C to 149°C)
Ethylene Propylene Rubber	-70°F to 275°F (-57°C to 135°C)

Flow Calculations with 1000 psig (69 bar) Inlet Pressure

Valve Series	Max. Cv	Pressure Drop ΔP		Water @ 60°F (16°C)		Air @ 60°F (16°C)	
		psig	bar	gpm	m³/hr	scfm	m³/hr
PR4	1.24	10	0.7	3.9	0.9	123.1	209.6
		50	3.4	8.8	2.0	265.9	446.3
		100	6.9	12.4	2.8	359.6	607.0
PR6	3.19	10	0.7	10.1	2.3	315.7	533.5
		50	3.4	22.6	5.1	672.3	1128.2
		100	6.9	31.9	7.2	891.6	1504.1



Kits

Plug Kits – Specify the combination of valve series, seal material, plug material, and handle color (if applicable).
Example: KIT-PR4-VT-SS-R. This kit consists of a PR4 stainless steel plug with fluorocarbon rubber seat and seal elastomers, PTFE back-up rings, red handle, and handle pin.

Seal Kits – Specify the combination of valve series and seal material.
Example: KIT-PR4-BN. This kit consists of a PR4 Nitrile rubber seat and seal elastomers and PTFE back-up rings.

Parker Hannifin Corporation
Instrumentation Products Division
Jacksonville, AL USA
http://www.parker.com/ipd

Tel: +45 63 12 83 00 | Email: ps@hymatik.com | www.hymatik.com | Hvidkaervej 27a, DK-5250 Odense SV, Denmark

PR Series Rotary Plug Valves

Flow Data / Dimensions

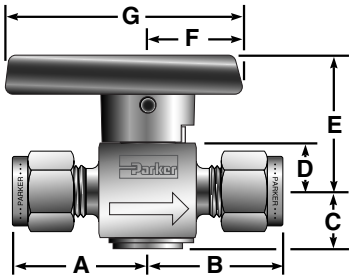

Model Shown: 4A-PR4-VT-B

Port Size	Basic Part #	Flow Data: Orifice Inch	Orifice mm	Cv	X_T *	End Connections Port 1 Port 2	Dimensions Inches (mm): A†	B†	C	D	E	F	G
2F	PR4	0.193	4.9	1.24	0.39	1/8" Female NPT	0.89 (22.6)	0.89 (22.6)	0.46 (11.7)	0.38 (9.7)	1.07 (27.2)	0.75 (19.1)	1.88 (47.8)
2M		0.172	4.4	1.02	0.39	1/8" Male NPT	0.77 (19.6)	0.77 (19.6)					
2A		0.093	2.4	0.22	0.48	1/8" A-LOK®	1.00 (25.4)	1.00 (25.4)					
2Z						1/8" CPI™							
4F		0.193	4.9	1.24	0.39	1/4" Female NPT	1.05 (26.7)	1.05 (26.7)					
4M		0.193	4.9	1.24	0.39	1/4" Male NPT	0.96 (24.4)	0.96 (24.4)					
4A		0.187	4.7	1.18	0.41	1/4" A-LOK®	1.09 (27.7)	1.09 (27.7)					
4Z						1/4" CPI™							
4V		0.187	4.7	1.18	0.41	1/4" VacuSeal	1.02 (25.9)	1.02 (25.9)					
6A		0.193	4.9	1.24	0.39	3/8" A-LOK®	1.14 (29.0)	1.14 (29.0)					
6Z						3/8" CPI™							
M6A		0.188	4.8	1.18	0.41	6mm A-LOK®	1.08 (27.4)	1.08 (27.4)					
M6Z						6mm CPI™							
4F	PR6	0.281	7.1	3.19	0.28	1/4" Female NPT	1.19 (30.2)	1.19 (30.2)	0.67 (17.0)	0.56 (14.2)	1.49 (37.8)	0.99 (25.1)	2.40 (61.0)
6A		0.281	7.1	3.19	0.28	3/8" A-LOK®	1.33 (33.8)	1.33 (33.8)					
6Z						3/8" CPI™							
8F		0.281	7.1	3.19	0.28	1/2" Female NPT	1.44 (36.6)	1.44 (36.6)					
8M		0.281	7.1	3.19	0.28	1/2" Male NPT	1.32 (33.5)	1.32 (33.5)					
8A		0.281	7.1	3.19	0.28	1/2" A-LOK®	1.44 (36.6)	1.44 (36.6)					
8Z						1/2" CPI™							
M8A		0.250	6.4	2.84	0.29	8mm A-LOK®	1.30 (33.0)	1.30 (33.0)					
M8Z						8mm CPI™							
M10A		0.281	7.1	3.19	0.28	10mm A-LOK®	1.34 (34.0)	1.34 (34.0)					
M10Z						10mm CPI™							
M12A		0.281	7.1	3.19	0.28	12mm A-LOK®	1.47 (37.3)	1.47 (37.3)					
M12Z						12mm CPI™							

* Tested in accordance with ISA S75.02. Gas flow will be choked when $P_1 - P_2 / P_1 = x_T$.
† For CPI™ and A-LOK®, dimensions are measured with nuts in the finger tight position.

Dimensions in inches/millimeters are for reference only, subject to change.

Parker Hannifin Corporation
Instrumentation Products Division
Jacksonville, AL USA
http://www.parker.com/ipd

How to Order

The correct part number is easily derived from the following example and ordering chart. The six product characteristics required are coded as shown in the chart.

*** Note:** If the inlet and outlet ports are the same, eliminate the outlet port designator.

The following example describes a PR Series rotary plug valve equipped with 1/4" CPI™ compression inlet and outlet ports, Nitrile seals, PTFE back-up rings, and stainless steel construction.

Example:

4Z	–	PR4	–	BNT	–	SS
Inlet Port* / Outlet Port*		Valve Series		Seal Material / Back-Up Rings		Body Material

Inlet and Outlet Ports*				Valve Series	Seal Material		Back-Up Rings		Body Material	
2A	1/8" A-LOK®	**6A**	3/8" A-LOK®	**PR4**	**V**	Fluorocarbon Rubber	**T**	PTFE	**SS**	Stainless Steel
2Z	1/8" CPI™	**6Z**	3/8" CPI™		**KZ**	Highly Fluorinated Fluorocarbon Rubber			**B**	Brass
2F	1/8" Female NPT	**M6A**	6mm A-LOK®		**EPR**	Ethylene Propylene Rubber				
2M	1/8" Male NPT	**M6Z**	6mm CPI™		**BN**	Nitrile Rubber				
4A	1/4" A-LOK®									
4Z	1/4" CPI™									
4F	1/4" Female NPT									
4M	1/4" Male NPT									
4V	1/4" VacuSeal									
4F	1/4" Female NPT	**M8A**	8mm A-LOK®	**PR6**	**V**	Fluorocarbon Rubber				
6A	3/8" A-LOK®	**M8Z**	8mm CPI™		**EPR**	Ethylene Propylene Rubber				
6Z	3/8" CPI™	**M10A**	10mm A-LOK®		**BN**	Nitrile Rubber				
8A	1/2" A-LOK®	**M10Z**	10mm CPI™							
8Z	1/2" CPI™	**M12A**	12mm A-LOK®							
8F	1/2" Female NPT	**M12Z**	12mm CPI™							
8M	1/2" Male NPT									

* If the inlet and outlet ports are the same, eliminate the outlet port designator.

Options

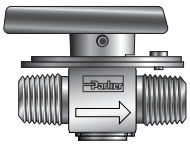

Lock-Out Device

Used to lock the handle from accidental rotation in either the opened or closed position. To order the device separately, specify **LD-PR4** or **LD-PR6**.

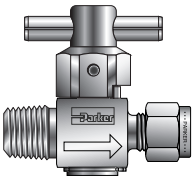

T-Bar Handle

An all metal bar stock design for higher strength and durability. Consists of a stainless steel pin and aluminum adapter. To order, add the suffix –**T** to the end of the part number.
Example and model shown: 4M4A-PR4-EPRT-SS-**T**.

Downstream Venting – As the valve is positioned from opened to closed, downstream pressure is released to atmosphere through a vent hole in the body and plug. The maximum recommended operating pressure for this option is 150 psig (10 bar). To order, insert **V** after PR in the model number. **Example:** 4A-PR**V**4-VT-B

Colored Handles – Black is the standard color. Add the designator corresponding to the correct handle color as a suffix to the part number: **B** – blue, **G** – green, **R** – red. **Example:** M6A-PR4-BNT-SS-**G**

Stainless Steel Directional Handles – A stainless steel handle with the same design configuration as the standard nylon handle is available for the PR4 series. Add the designator –**ST** as a suffix to the part number.
Example: 4Z-PR4-EPRT-SS-**ST**

Parker Hannifin Corporation
Instrumentation Products Division
Jacksonville, AL USA
http://www.parker.com/ipd

Tel: +45 63 12 83 00 | Email: ps@hymatik.com | www.hymatik.com | Hvidkaervej 27a, DK-5250 Odense SV, Denmark

MB Series Ball Valves

Introduction

Parker MB Series Ball Valves, with their rugged compact design, offer positive shut off or directional control of fluids in process, power and instrumentation applications. The unique one piece seat/packing design insures excellent sealing characteristics while accommodating a superior temperature range and cycle life.

These valves are available in two-way and three-way configurations, brass and stainless steel construction, with a wide variety of port connections. Also, all ports are suitable as inlets to full operating pressure of the valve.

Features

- One piece seat/packing design
- Broad temperature range
- Coated metal inserts
- One piece stem/ball
- Wide variety of US Customary and SI ports
- Panel mountable to 1/4" thickness
- Bi-directional flow
- Handle indicates direction of flow
- Full operating pressure at any port
- Positive handle stops
- Color coded handles
- 100% factory tested
- Vent option
- Manual, electric or pneumatic actuation
- Leak-tight center-off position on three-way valves

Specifications

Pressure Rating	3000 psig* (207 bar) CWP - MB6 2500 psig* (172 bar) CWP - MB2/MB4/MB8
Temperature Rating	-65°F to 300°F (-54°C to 149°C)
Orifice	.052" to .406" (1.3mm to 10.3mm)
C_V	.05 to 6.96
Body Materials	Stainless steel and brass
Body Configurations	two-way (in-line and angle) 3-way, 4-way and 5-way
Port Connections	Tube compression (CPI™ / A-LOK®) NPT (Male / Female) BSP, VacuSeal and UltraSeal
Port Size	1/16" to 3/4" and 3mm to 12mm
Seat/Packing	PFA-Perfluoroalkoxy

* Preset from factory to 1000 psig (69 bar) bubble tight service. To achieve higher pressures packing nut must be tightened with Packing Tool MB6X5. Additional details are in INI-243 Installation Instructions. Packing in vented MB Series Ball Valves is factory adjusted for the maximum valve pressure rating of 500 psig (34 bar).

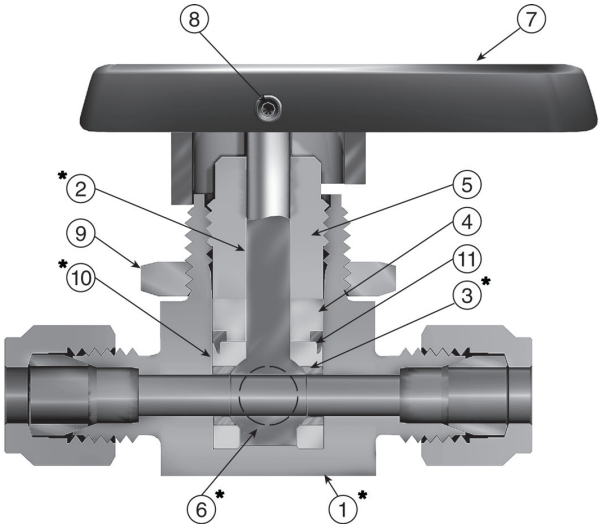

Materials of Construction

Item #	Part Description	Stainless Steel	Brass
1	Body	ASTM A 276 Type 316	ASTM B 16 Alloy C36000
2	Stem	ASTM A 276 Type 316	
3	Hollow Insert	316 Stainless Steel	
4	Packing Washer	ASTM B 16 Alloy C36000	
5	Packing Nut	ASTM A 479 Type 316	ASTM B 16 Alloy C36000
6	Solid Insert	316 Stainless Steel	
7	Handle	Nylon 6/6	
8	Set Screw	Stainless Steel	
9	Panel Nut	316 Stainless Steel**	
*10	Seat/Packing	Perfluoroalkoxy (PFA)	
11	Packing Ring	ASTM A 479 Type 316	

* Wetted Parts **Nickel Plated Brass for MB8
Lubrication: Perfluorinated polyether

Pressure vs. Temperature

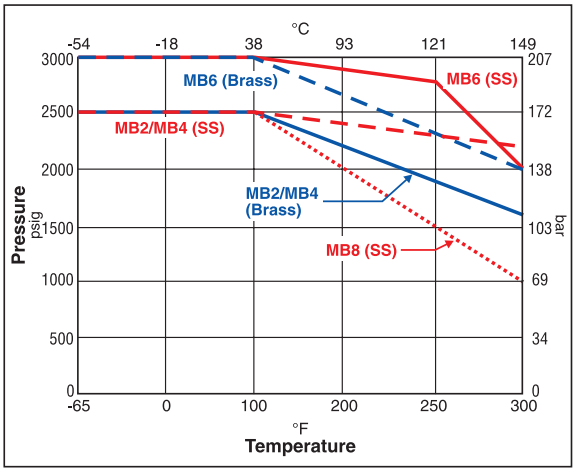

Note: To determine MPa, multiply bar by 0.1

Parker Hannifin Corporation
Instrumentation Products Division
Jacksonville, AL USA
http://www.parker.com/ipd

Two-Way In-Line Dimensions, Flow Data

Two-Way In-Line

Vented – In off position the downstream port vents to atmosphere through a hole in the side of the body.

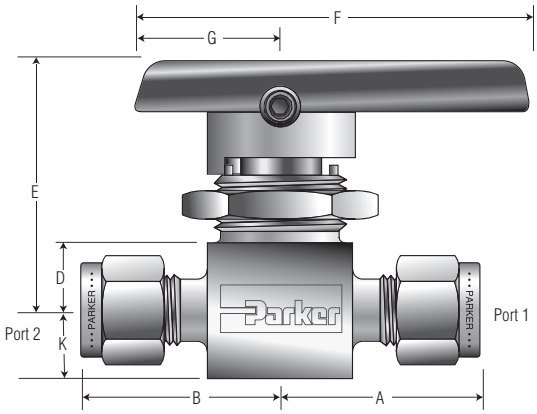

H - Maximum Panel Thickness
I - Panel Hole Diameter
J - Body Width

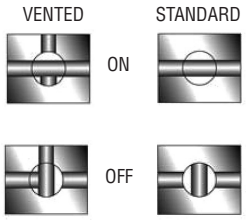

Model shown: 4A-MB6LPFA-SSP

MB

Port Size	Basic Part #	Flow Data: Orifice Inch	Orifice mm	Cv	X_T*	End Connections Port 1	Port 2	A†	B†	D	E	F	G	H	I	J	K
1Z	MB2L	0.052	1.3	0.03	0.46	1/16" CPI™		0.84 (21.3)	0.84 (21.3)	0.34 (8.6)	1.31 (33.3)	1.88 (47.8)	0.75 (19.1)	0.25 (6.4)	0.58 (14.7)	0.58 (14.7)	0.28 (7.1)
1A						1/16" A-LOK®											
2Z		0.093	2.4	0.20	0.42	1/8" CPI™		1.00 (25.4)	1.00 (25.4)								
2A						1/8" A-LOK®											
M3Z		0.086	2.2	0.17	0.43	3mm CPI™		1.00 (25.4)	1.00 (25.4)								
M3A						3mm A-LOK®											
2F	MB4L	0.125	3.2	0.44	0.34	1/8" Female NPT		0.81 (20.6)	0.81 (20.6)								
4Z						1/4" CPI™		1.12 (28.5)	1.12 (28.5)								
4A						1/4" A-LOK®											
M6Z						6mm CPI™		1.12 (28.5)	1.12 (28.5)								
M6A						6mm A-LOK®											
2Z	MB6L	0.093	2.4	0.18	0.55	1/8" CPI™		1.09 (27.7)	1.09 (27.7)	0.44 (11.2)	1.56 (39.6)	2.37 (60.2)	0.88 (22.4)	0.25 (6.4)	0.77 (19.6)	0.80 (20.3)	0.38 (9.7)
2A						1/8" A-LOK®											
2F		0.187	4.7	1.02	0.53	1/8" Female NPT		1.00 (25.4)	1.00 (25.4)								
4M						1/4" Male NPT		1.00 (25.4)	1.00 (25.4)								
4Z						1/4" CPI™		1.19 (30.2)	1.19 (30.2)								
4A						1/4" A-LOK®											
4F						1/4" Female NPT		1.03 (26.2)	1.03 (26.2)								
4M4Z						1/4" Male NPT	1/4" CPI™	1.00 (25.4)	1.19 (30.2)								
4M4A						1/4" Male NPT	1/4" A-LOK®										
4V						1/4" VacuSeal		1.03 (26.2)	1.03 (26.2)								
6Z						3/8" CPI™		1.31 (33.3)	1.31 (33.3)								
6A						3/8" A-LOK®											
M6Z						6mm CPI™		1.19 (30.2)	1.19 (30.2)								
M6A						6mm A-LOK®											
M8Z						8mm CPI™		1.22 (31.0)	1.22 (31.0)								
M8A						8mm A-LOK®											
8A	MB8L	0.406	10.3	10.7	0.16	1/2" A-LOK®		1.94 (49.3)	1.94 (49.3)	0.69 (17.5)	2.39 (60.7)	4.50 (114.3)	1.50 (38.1)	0.38 (9.7)	1.50 (38.1)	1.50 (38.1)	0.69 (17.5)
8Z						1/2" A-CPI™											
8F		0.406	10.3	6.1	0.20	1/2" FNPT		1.56 (39.6)	1.56 (39.6)								
12A		0.406	10.3	6.4	0.19	3/4" A-LOK®		1.94 (49.3)	1.94 (49.3)								
12Z						3/4" CPI™											
M12A		0.375	9.5	10.7	0.16	12mm A-LOK®		1.96 (49.8)	1.96 (49.8)								
M12Z						12mm CPI™											

* Tested in accordance with ISA S75.02. Gas flow will be choked when $P_1 - P_2 / P_1 = x_T$.
† For CPI™ and A-LOK®, dimensions are measured with nuts in the finger tight position.

Dimensions in inches/millimeters are for reference only, subject to change.

Parker Hannifin Corporation
Instrumentation Products Division
Jacksonville, AL USA
http://www.parker.com/ipd

Tel: +45 63 12 83 00 | Email: ps@hymatik.com | www.hymatik.com | Hvidkaervej 27a, DK-5250 Odense SV, Denmark

Two-Way Angle/Three-Way MB Series Ball Valves

Two-Way Angle and Three-Way Dimensions, Flow Data

Two-Way Angle

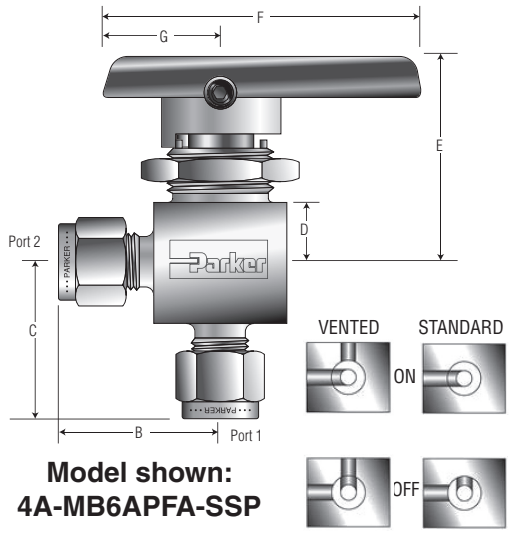

Model shown:
4A-MB6APFA-SSP

Three-Way

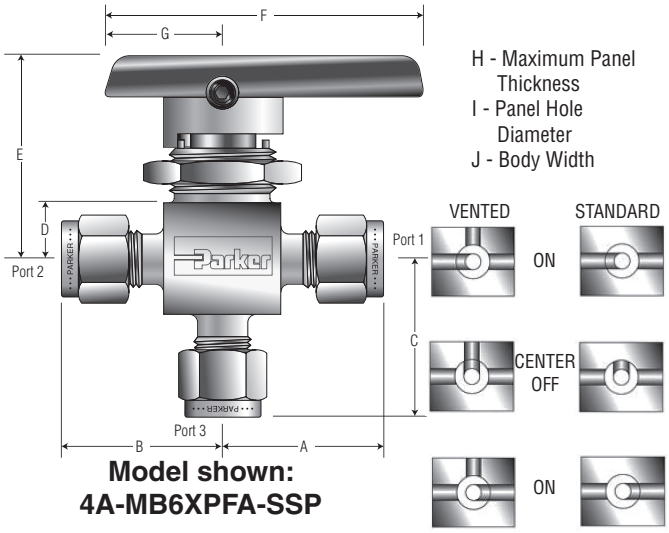

H - Maximum Panel Thickness
I - Panel Hole Diameter
J - Body Width

Model shown:
4A-MB6XPFA-SSP

Port Size	Basic Part #	Flow Data: Orifice Inch	Orifice mm	Cv	X_T*	End Connections: Port 1	Port 2	Port 3 ‡	Dimensions Inches (mm): A†	B†	C	C	E	F	G	H	I	J
1Z	MB2A MB2X	0.052	1.3	0.02	0.58	1/16" CPI™			0.84 (21.3)	0.84 (21.3)	0.81 (20.6)	0.34 (8.6)	1.31 (33.3)	1.88 (47.8)	0.75 (19.1)	0.25 (6.4)	0.58 (14.7)	0.58 (14.7)
1A						1/16" A-LOK®												
2Z		0.093	2.4	0.18	0.48	1/8" CPI™			1.00 (25.4)	1.00 (25.4)	0.97 (24.6)							
2A						1/8" A-LOK®												
M3Z		0.086	2.2	0.15	0.47	3mm CPI™			1.00 (25.4)	1.00 (25.4)	0.97 (24.6)							
M3A						3mm A-LOK®												
2F	MB4A MB4X	0.125	3.2	0.34	0.45	1/8" Female NPT			0.81 (20.6)	0.81 (20.6)	0.81 (20.6)	0.34	1.31	1.88	0.75	0.25	0.58	0.58
4Z						1/4" CPI™			1.12 (28.4)	1.12 (28.4)	1.12 (28.4)							
4A						1/4" A-LOK®												
M6Z						6mm CPI™			1.12 (28.4)	1.12 (28.4)	1.12 (28.4)							
M6A						6mm A-LOK®												
4Z	MB6A MB6X	0.187	4.7	0.70	0.58	1/4" CPI™			1.19 (30.2)	1.19 (30.2)	1.15 (29.2)	(8.6)	(33.3)	(47.8)	(19.1)	(6.4)	(14.7)	(14.7)
4A						1/4" A-LOK®												
4F						1/4" Female NPT			1.03 (26.2)	1.03 (26.2)	1.03 (26.2)							
4V						1/4" VacuSeal			1.03 (26.2)	1.03 (26.2)	1.03 (26.2)							
4Z4Z4M						1/4" CPI™	1/4" CPI™	1/4" Male NPT	1.19 (30.2)	1.19 (30.2)	1.03 (26.2)	0.44 (11.2)	1.56 (39.6)	2.37 (60.2)	0.88 (22.4)	0.25 (6.4)	0.77 (19.6)	0.80 (20.3)
4A4A4M						1/4" A-LOK®	1/4" A-LOK®	1/4" Male NPT										
6Z						3/8" CPI™			1.31 (33.3)	1.31 (33.3)	1.23 (31.2)							
6A						3/8" A-LOK®												
M6Z						6mm CPI™			1.19 (30.2)	1.19 (30.2)	1.15 (29.2)							
M6A						6mm A-LOK®												
M8Z						8mm CPI™			1.22 (31.0)	1.22 (31.0)	1.18 (30.0)							
M8A						8mm A-LOK®												
8A	MB8A MB8X	0.406	10.3	5.4	0.36	1/2" A-LOK®			1.75 (44.5)	1.75 (44.5)	1.75 (44.5)	0.69 (17.5)	2.39 (60.7)	4.50 (114.3)	1.50 (38.1)	0.38 (9.7)	1.50 (38.1)	1.50 (38.1)
8Z						1/2" A-CPI™												
8F		0.406	10.3	5.0	0.33	1/2 " Female NPT			1.56 (39.6)	1.56 (39.6)	1.56 (39.6)							
12A		0.406	10.3	4.9	0.39	3/4" A-LOK®			1.75 (44.5)	1.75 (44.5)	1.75 (44.5)							
12Z						3/4" CPI™												
M12A		0.375	9.5	5.6	0.37	12mm A-LOK®			1.75 (44.5)	1.75 (44.5)	1.75 (44.5)							
M12Z						12mm CPI™												

* Tested in accordance with ISA S75.02. Gas flow will be choked when $P_1 - P_2 / P_1 = x_T$.
‡ Not applicable for the two-way Angle pattern.
† For CPI™ and A-LOK®, dimensions are measured with nuts in the finger tight position.

Dimensions in inches/millimeters are for reference only, subject to change.

Parker Hannifin Corporation
Instrumentation Products Division
Jacksonville, AL USA
http://www.parker.com/ipd

How to Order Two-Way In-Line, Two-Way Angle and Three-Way Patterns

The correct part number is easily derived from the following example and ordering chart. The six product characteristics required are coded as shown in the chart.

The following example describes a MB Series, two-way, in-line pattern ball valve with 1/8" CPI™ compression end connections for ports 1 and 2 Inline

Example:

2Z	–	MB2LPFA	–	SSP
Port 1* / Port 2* / Port 3*	–	Valve Series / Seat Material	–	Body Material

Ports 1, 2 and 3*				Valve Series	Seat Material	Body Material	
1Z	1/16" CPI™	M3Z	3mm CPI™	MB2L	PFA Perfluoro alkoxy	SSP	Stainless Steel (Stainless Steel with Stainless Steel Panel Nut)
1A	1/16" A-LOK®	M3A	3mm A-LOK®	MB2A			
2Z	1/8" CPI™			MB2X			
2A	1/8" A-LOK®						
2F	1/8" Female NPT	M6Z	6mm CPI™	MB4L		BP	Brass (Brass with Stainless Steel Panel Nut) (Only available in MB 2, 4, 6)
4Z	1/4" CPI™	M6A	6mm A-LOK®	MB4A			
4A	1/4" A-LOK®			MB4X			
2Z	1/8" CPI™	6Z	3/8" CPI™	MB6L			
2A	1/8" A-LOK®	6A	3/8" A-LOK®	MB6A			
2F	1/8" Female NPT	M6Z	6mm CPI™	MB6X			
4Z	1/4" CPI™	M6A	6mm A-LOK®				
4A	1/4" A-LOK®	M8Z	8mm CPI™				
4F	1/4" Female NPT	M8A	8mm A-LOK®				
4M	1/4" Male NPT						
4V	1/4" VacuSeal						
8Z	1/2" CPI™	12Z	3/4" CPI™	MB8A			
8A	1/2" A-LOK®	12A	3/4" A-LOK®	MB8L			
8F	1/2" Female NPT	M12Z	12mm CPI™	MB8X			
		M12A	12mm A-LOK®				

* Valves with identical port connections for port 1 and port 2 require only one designator.

Lock-Out Device Option

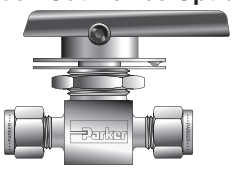

Oval Handle Option

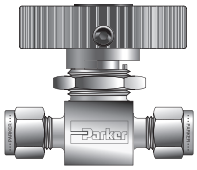

Pneumatic Actuator Option

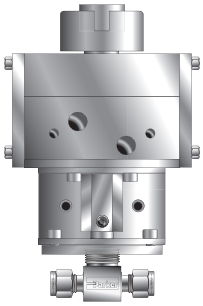

MB

How to Order Options (Two-Way, Angle, and Three-Way)

Lock-Out Devices – For field installation, simply substitute the correct valve series number in the following nomenclature: **LD-**valve series. **Example**: **LD-**MB6L

Colored Handles – **Example**: MB6-HANDLE-BLUE
NOTE: Not offered in MB8 series.

Stainless Steel Handles – **Example**: MB6-HANDLE-SS (MB6 series only)

Oval Handles – **Example**: MB6-OV-HANDLE-BLACK. If requesting a colored oval handle. **Example**: MB6-OV-HANDLE-RED
NOTE: MB6 series only.

Vented Valves – Add the designator **V** after the **MB** in the part number for the vent option. **Example**: 2Z-MB**V**2XPFA-SSP.

Oxygen Cleaning – Add the suffix **-C3** to the end of the part number to receive valves cleaned and assembled for oxygen service in accordance with Parker Specification ES8003. **Example**: 4A-MB4LPFA-SSP-**C3**

Pneumatic Actuators – For detailed actuator information, refer to the Pneumatic Actuators section of this catalog. For factory assembly, add the actuator part number as the suffix to the valve part number. **Example**: 4A-MB4LPFA-SSP-**61AC-2**. For field installation, specify the actuator desired. **Example**: **61AC-2**. The appropriate mounting hardware may be obtained by adding the valve series and actuator size to the prefix **MK-**. **Example**: **MK-**MB4L-61

Electric Actuators – For detailed actuator information, refer to the Electric Actuators section of this catalog. For factory assembly, add the actuator part number as the suffix to the valve part number. **Example**: M6A-MB6XPFA-SSP-**71C**. For field installation, specify the actuator desired. **Example**: **71C**. The appropriate mounting hardware may be obtained by adding the valve series and actuator series to the prefix **MK-**. **Example**: **MK-**MB6X-70

Parker Hannifin Corporation
Instrumentation Products Division
Jacksonville, AL USA
http://www.parker.com/ipd

Tel: +45 63 12 83 00 | Email: ps@hymatik.com | www.hymatik.com | Hvidkaervej 27a, DK-5250 Odense SV, Denmark

Four-Way and Five-Way MB Series Ball Valves

Dimensions, Flow Data

Four-Way

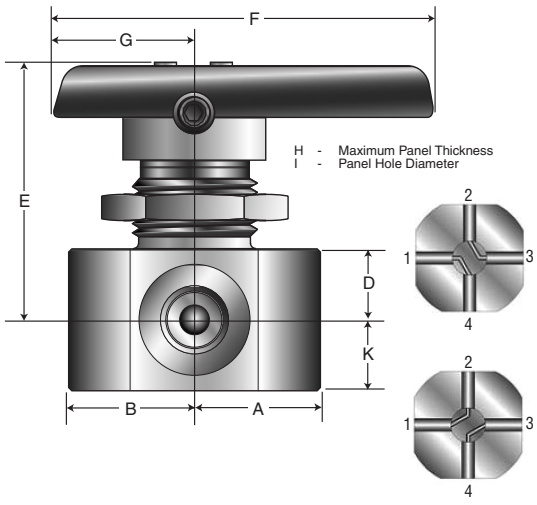

Five-Way

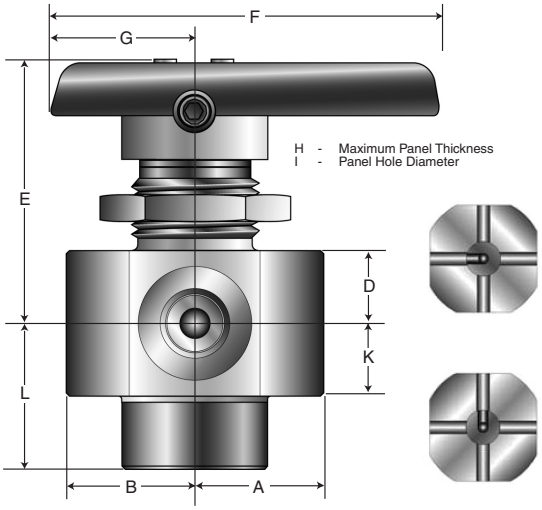

Port Size	Basic Part #	Flow Data: Orifice Inch	Flow Data: Orifice mm	Flow Data: Cv	Flow Data: X_T*	End Connections: Port 1 Port 2	Dimensions Inches (mm): A†	B†	D	E	F	G	H	I	K	L
2A7	MB6X4	0.063	1.6	0.17	0.16	1/8" Female A-LOK®	0.97 (24.6)	0.97 (24.6)	0.44 (11.2)	1.57 (39.9)	2.37 (60.2)	0.88 (22.4)	0.25 (6.4)	0.77 (19.6)	0.44 (11.2)	
2Z7						1/8" Female CPI™										
2F						1/8" Female NPT	0.78 (19.8)	0.78 (19.8)								
2A7	MB6X5	0.063	1.6	0.17	0.16	1/8" Inverted A-LOK®	0.97 (24.6)	0.97 (24.6)	0.44 (11.2)	1.57 (39.9)	2.37 (60.2)	0.88 (22.4)	0.25 (6.4)	0.77 (19.6)	0.44 (11.2)	0.97 (24.6)
2Z7						1/8" Inverted CPI™										
2F						1/8" Female NPT	0.78 (19.8)	0.78 (19.8)								0.88 (22.4)

* Tested in accordance with ISA S75.02. Gas flow will be choked when $P_1 - P_2 / P_1 = x_T$.
† For CPI™ and A-LOK®, dimensions are measured with nuts in the finger tight position.

Dimensions in inches/millimeters are for reference only, subject to change.

How to Order Four-Way and Five-Way Patterns

The correct part number is easily derived from the following example and ordering chart. The four product characteristics required are coded as shown in the chart.

The following example describes a MB-Series four-way pattern ball valve with 1/8" female CPI™ compression end connections for all ports, PFA seat and packing, stainless steel body construction, and a panel mounting nut.

Example:

2Z7 – MB6X4PFA – SSP

End Connection	Valve Series	Seat Material	Body Material
2F 1/8" Female NPT **2Z7** 1/8" CPI™ **2A7** 1/8" A-LOK®	**MB6X4** **MB6X5**	**PFA** Perfluoroalkoxy	**SSP** Stainless Steel (Stainless Steel with Stainless Steel Panel Nut)

Parker Hannifin Corporation
Instrumentation Products Division
Jacksonville, AL USA
http://www.parker.com/ipd

Notes

Parker Hannifin Corporation
Instrumentation Products Division
Jacksonville, AL USA
http://www.parker.com/ipd

Tel: +45 63 12 83 00 | Email: ps@hymatik.com | www.hymatik.com | Hvidkaervej 27a, DK-5250 Odense SV, Denmark

SWB Series Ball Valves

Introduction

Parker's three-piece SWB Series Ball Valves are durable valves that can handle the pressure and piping loads. The center section can swing out to quickly and easily replace seats, seals and the ball without major disruption to the piping system.

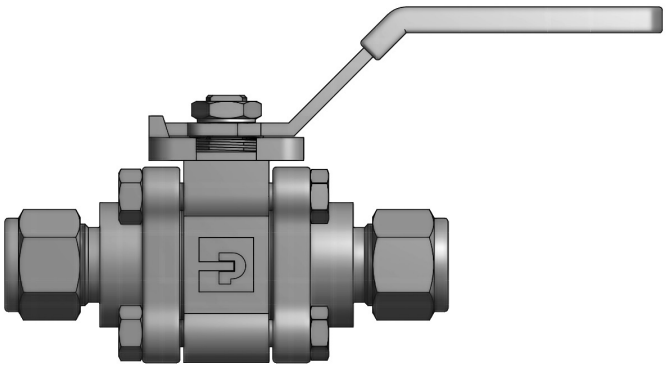

Model Shown: 8Z-SWB8L-RT-BN-SS

Features

- Ultra low internal volume
- Free floating ball design allows for seat wear compensation
- Self-compensating stem seal
- Spring-loaded seats
- Blow out resistant stem
- Fully enclosed body bolting
- Four bolt construction
- ISO-type actuator mounting design
- Pneumatic and electric actuation options
- 100% factory tested

Specifications

Body Materials	Stainless Steel
Seat Materials	Reinforced PTFE PEEK
Seal Materials	Nitrile Rubber Ethylene Propylene Rubber Fluorocarbon Rubber PTFE Grafoil®
Flow Data	C_V: 1.1 to 35.0
Pressure Ratings	2500 psig (172 bar) 1500 psig (103 bar) SWB16 with PEEK Seats
Temperature Ratings — Seats	
Reinforced PTFE Seats	-65°F to 450°F (-54°C to 232°C)
PEEK Seats	-65°F to 600°F (-54°C to 316°C)
Temperature Ratings — Seals	
Nitrile Rubber Seals	-40°F to 250°F (-40°C to 121°C)
Ethylene Propylene Rubber Seals	-65°F to 300°F (-54°C to 149°C)
Fluorocarbon Rubber Seals	-15°F to 400°F (-26°C to 204°C)
PTFE Seals	-65°F to 350°F (-54°C to 177°C)
Grafoil® Seals	-65°F to 600°F (-54°C to 316°C)

Parker Hannifin Corporation
Instrumentation Products Division
Jacksonville, AL USA
http://www.parker.com/ipd

Materials of Construction

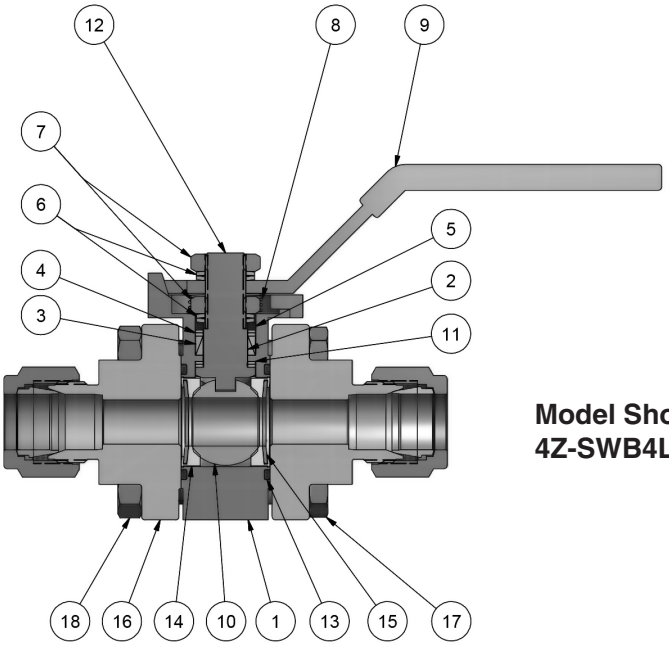

Model Shown:
4Z-SWB4L-RT-V-SS

Materials of Construction

Item #	Part	Qty	Material
1	Body	1	ASTM A 351 Grade CF3M
2	Lower Packing	1	PTFE[1]
3	Upper Packing	1	PTFE[1]
4	Packing Support	2	PEEK
5	Packing Gland	1	ASTM A 276 Type 304
6	Stem Spring	4[3]	ASTM A 666 Type 301
7	Stem Hex Nut	2	ASTM A 276 Type 304
8	Grounding Spring	1	ASTM A 276 Type 304
9	Handle Assembly	1	ASTM A 276 Type 304; Vinyl Covered
10	Ball	1	ASTM A 276 Type 316
11	Thrust Washer	2	PEEK
12	Stem	1	ASTM A 276 Type 316
13	Body Seal	2	Fluorocarbon Rubber[2]
14	Seat	2	Reinforced PTFE, PEEK[1]
15	Seat Spring[4]	2	ASTM A 666 Type 301
16	End Flanges	2	ASTM A 351 Grade CF3M
17	Body Bolts	4	ASTM A 193 Grade B8M Class 2
18	Body Bolt Nuts	4	ASTM A 194 Grade 8M

1 Optional Seat and Packing Seal materials are described in the How to Order section.
2 Optional Seal materials are described in the How To Order Section.
3 Size 8 SWB Series Ball Valves only require 3 Stem Springs.
4 PEEK seated SWB Series Ball Valves do not have Seat Springs.

Parker Hannifin Corporation
Instrumentation Products Division
Jacksonville, AL USA
http://www.parker.com/ipd

Tel: +45 63 12 83 00 | Email: ps@hymatik.com | www.hymatik.com | Hvidkaervej 27a, DK-5250 Odense SV, Denmark

Pressure vs. Temperature

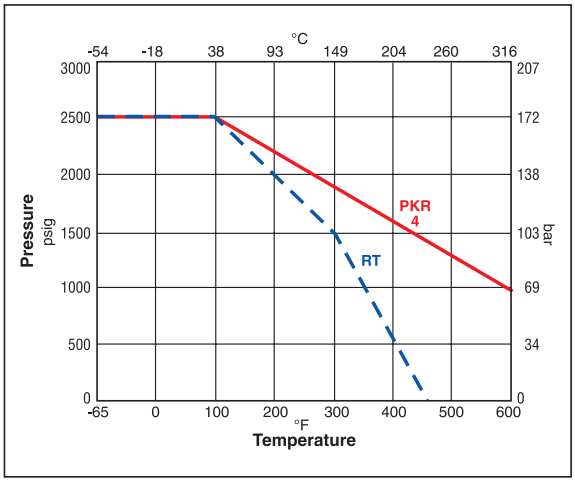

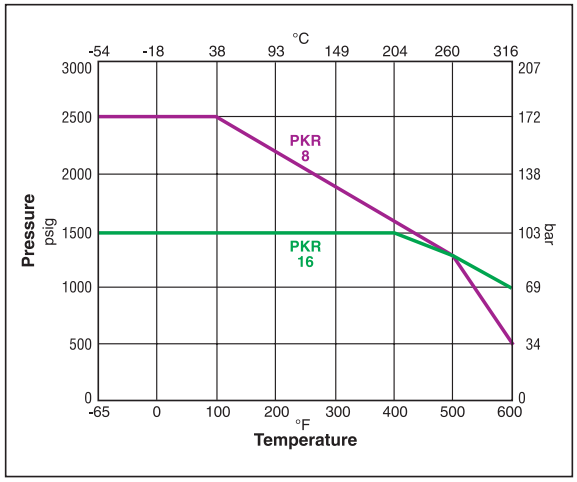

SWB

Note: This Pressure versus Temperature chart reflects the use of indicated seat materials in Stainless Steel valves without consideration of seal materials. When combining seat and seal materials, the most restrictive temperature rating of the seats or seals becomes the limiting factor on temperature range. Please refer to **page 24** for seal temperature ranges.

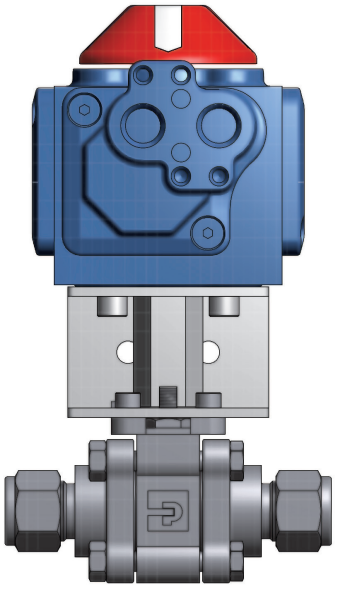

Pneumatic Actuated Model Shown:
8Z-SWB8L-RT-V-SS-51AD

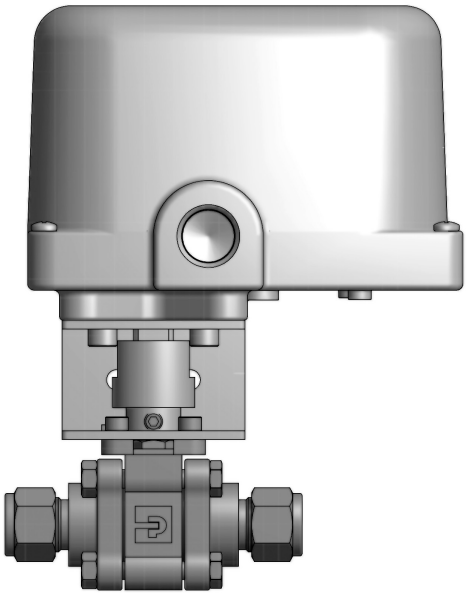

Electric Actuated Model Shown:
8A-SWB8L-RT-V-SS-71

Dimensions / Flow Data

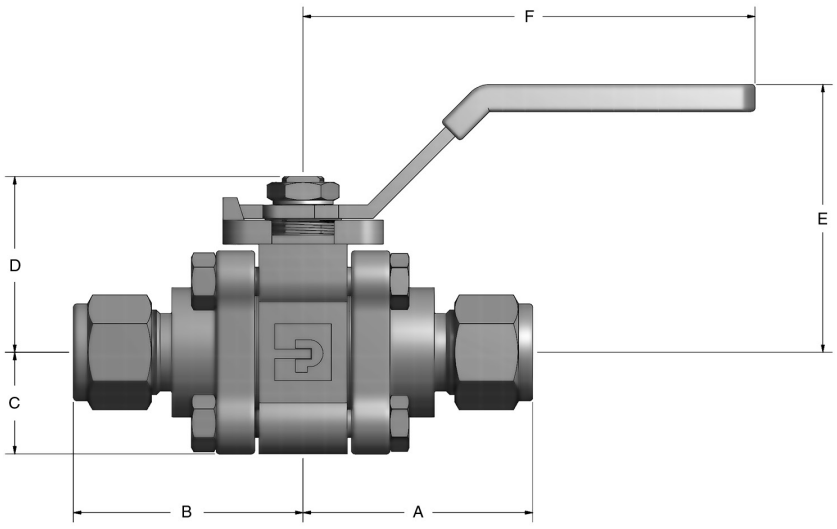

Basic Part Number	Flow Data				End Connections		Dimensions											
	Orifice		C_V	X_T*			A†		B†		C		D		E		F	
	Inch	mm			Port 1	Port 2	Inch	mm	Inch	mm	Inch	mm	Inch	mm	Inch	mm	Inch	mm
4Z-SWB4L	0.19	4.8	1.1	0.19	CPI™ Tube		1.59	40.4	1.59	40.4	0.68	17.3	1.28	32.5	2.00	50.8	3.00	76.2
4A-SWB4L					A-LOK® Tube													
4F-SWB4L	0.28	7.1	2.9	0.29	Female NPT		1.09	27.7	1.09	27.7								
6Z-SWB4L	0.28	7.1	4.5	0.19	CPI™ Tube		1.59	40.4	1.59	40.4								
6A-SWB4L					A-LOK® Tube													
6F-SWB8L	0.44	11.2	8.2	0.35	Female NPT		1.29	32.8	1.29	32.8	0.89	22.6	1.54	39.1	2.36	59.9	3.94	100.1
8Z-SWB8L	0.41	10.4	6.4	0.35	CPI™ Tube		2.03	51.6	2.03	51.6								
8A-SWB8L					A-LOK® Tube													
8F-SWB8L	0.44	11.2	8.2	0.26	Female NPT		1.29	32.8	1.29	32.8								
8W-SWB8L	0.41	10.4	6.4	0.35	Tube Socket Weld		1.29	32.8	1.29	32.8								
8PBW8-SWB8L	0.44	11.2	8.2	0.26	Pipe Buttweld (Schedule 80)		1.35	34.3	1.35	34.3								
8PSW-SWB12L	0.52	13.2	13.5	0.34	Pipe Socket Weld		1.35	34.3	1.35	34.3	1.06	26.9	1.81	46.0	2.59	65.8	3.94	100.1
12Z-SWB12L	0.56	14.2	14.7	0.28	CPI™ Tube		2.03	51.6	2.03	51.6								
12A-SWB12L					A-LOK® Tube													
12F-SWB12L	0.56	14.2	14.7	0.28	Female NPT		1.39	35.3	1.39	35.3								
12W-SWB12L	0.56	14.2	14.7	0.28	Tube Socket Weld		1.39	35.3	1.39	35.3								
12PBW8-SWB12L	0.56	14.2	14.7	0.28	Pipe Buttweld (Schedule 80)		1.37	34.8	1.37	34.8								
12PSW-SWB16L	0.88	22.4	35.0	0.29	Pipe Socket Weld		1.95	49.5	1.95	49.5	1.25	31.8	2.30	58.4	3.00	76.2	5.71	145.0
12Z-SWB16L	0.56	14.2	14.7	0.28	CPI™ Tube		2.50	63.5	2.50	63.5								
12A-SWB16L					A-LOK® Tube													
16Z-SWB16L	0.88	22.4	35.0	0.29	CPI™ Tube		2.68	68.1	2.68	68.1								
16A-SWB16L					A-LOK® Tube													
16F-SWB16L	0.88	22.4	35.0	0.29	Female NPT		1.79	45.5	1.79	45.5								
16W-SWB16L	0.88	22.4	35.0	0.29	Tube Socket Weld		1.79	45.5	1.79	45.5								
16PBW8-SWB16L	0.88	22.4	35.0	0.29	Pipe Buttweld (Schedule 80)		1.81	46.0	1.81	46.0								

* Tested in accordance with ISA S75.02. Gas flow will be choked when $P_1 - P_2 / P_1 = x_T$.
† For CPI™ and A-LOK®, dimensions are measured with nuts in the finger tight position.

Dimensions in inches/millimeters are for reference only, subject to change.

Parker Hannifin Corporation
Instrumentation Products Division
Jacksonville, AL USA
http://www.parker.com/ipd

Tel: +45 63 12 83 00 | Email: ps@hymatik.com | www.hymatik.com | Hvidkaervej 27a, DK-5250 Odense SV, Denmark

SWB Series Ball Valves

How to Order

The correct part number is easily derived from the following example and ordering chart. The four product characteristics required are coded as shown in the chart.

The example below describes a SWB8L Two-Way Ball Valve with 1/2" A-LOK® end connections for ports 1 and 2, reinforced PTFE seats, Nitrile rubber body seals, and stainless steel construction.

*** Note:** If ports 1 and 2 are the same, eliminate the port 2 designator.

Example:

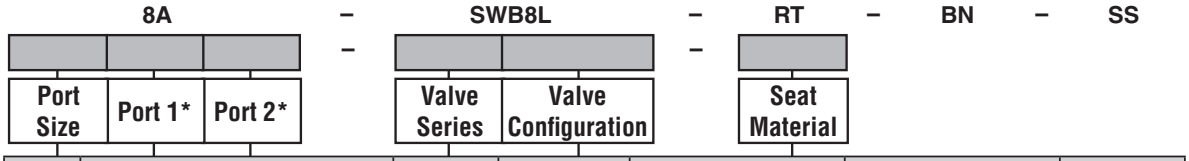

Port Size	Port 1* / Port 2*		Valve Series	Valve Configuration	Seat Material		Seal Material		Body Material	
4	Z	CPI™ Tube	SWB4	L 2-Way	PKR	Virgin PEEK[1]	T	PTFE	SS	Stainless Steel
6	A	A-LOK® Tube	SWB8		RT	Glass Reinforced PTFE	BN	Nitrile Rubber		
8	F	Female NPT	SWB12				EPR	Ethylene Propylene Rubber		
12	W	Tube Socket Weld	SWB16				V	Fluorocarbon Rubber		
16	PSW	Pipe Socket Weld					G	Grafoil® Gasket[1,2]		
	PBW8	Pipe Buttweld (Schedule 80)								

1 Not available in size 12.
2 Grafoil® Seals only available with PEEK Seats.
Note: Upper and Lower PTFE packing is replaced with PEEK when valves are ordered with PEEK Seats.

SWB

How to Order Options

	Examples
Lever Lock-Out Devices –	
Add the suffix -LD to the end of the part number to order directly on the valve.	4F-SWB8L-RT-V-SS-**LD**
For field installation, order part number as shown in the example.	SWB8/12-HANDLE-LOCKING
Oval Handles – Add the suffix -S to the end of the part number.	8A-SWB8L-RT-T-SS-**S**
Oval Handle Lock-Out Devices –	
Add the suffix -LD to the end of the part number to order directly on the valve.	6F-SWB8L-RT-V-SS-**S-LD**
For field installation, order part number as shown in the example.	SWB8/12-HANDLE-OVAL-LOCKING
Pneumatic Actuators – For detailed actuator information, refer to the Pneumatic Actuators section of this catalog.	
For factory assembly, add the actuator part number as the suffix to the valve part number.	8F-SWB8L-RT-BN-SS-**61AC-2**
For field installation, specify the the actuator desired.	**61AC-2**
The appropriate mounting hardware may be obtained by adding the valve series and actuator size to the prefix MK-.	**MK-**SWB8L-61
Electric Actuators – For detailed actuator information, refer to the Electric Actuators section of this catalog.	
For factory assembly, add the actuator part number as the suffix to the valve part number.	8A-SWB8L-RT-EPR-SS-**71A**
For field installation, specify the actuator desired.	71A
The appropriate mounting hardware may be obtained by adding the valve series and actuator series to the prefix MK-.	**MK-**SWB8L-70.

Grafoil® is a registered trademark of UCAR Carbon Technology Corporation

Parker Hannifin Corporation
Instrumentation Products Division
Jacksonville, AL USA
http://www.parker.com/ipd

Tel: +45 63 12 83 00 | Email: ps@hymatik.com | www.hymatik.com | Hvidkaervej 27a, DK-5250 Odense SV, Denmark

Parker Hannifin Corporation
Instrumentation Products Division
Jacksonville, AL USA
http://www.parker.com/ipd

Tel: +45 63 12 83 00 | Email: ps@hymatik.com | www.hymatik.com | Hvidkaervej 27a, DK-5250 Odense SV, Denmark

HB Series Ball Valves

Introduction

Parker High Pressure HB4 Series Ball Valves provide reliable shut-off or switching functions. The upper and lower trunnion bearings enhance the resistance of the trunnions against seizure, and increase the valve life in extreme applications. The compact and rugged design employs spring-loaded seats for high cycle life and low operating torques at pressures up to 10,000 psig (689 bar).

Features

- PEEK trunnion bearings for longer cycle life
- Two-way and three-way designs
- Compact FNPT version for tight work areas
- Blow-out resistant two-piece ball/stem
- Full operating pressure at any port
- Low operating torque
- Manual, electric or pneumatic actuation
- Panel mountable to 3/8" (9.6mm) thickness
- No packing to adjust
- Color coded fracture resistant handles
- Handle indicates direction of flow
- Positive handle stops
- Wide variety of US customary and SI ports
- Top of stem marked to indicate flow direction
- 100% factory tested
- Compact package
- Heat code traceability

Specifications

Pressure Rating	10,000 psig (689 bar) CWP with PEEK (PKR) Seats 6,000 psig (414 bar) CWP with PCTFE (K) Seats
Temp. Rating	-65˚F to 400˚F (-54˚C to 204˚C)
Body Materials	Stainless steel
Body Config.	Two-way and three-way
Port Connections	Tube compression (CPI™/A-LOK®) Short and long female NPT
Port Size	1/8" – 1/2" (6 mm to 12 mm)

Flow Data

	Two-Way HB4L	Three-Way HB4X
C_v	1.02	0.62
X_T	0.42	0.71
Orifice	0.188" (4.8mm)	0.188" (4.8mm)

Tested in accordance with ISA S75.02. Gas flow will be choked when $P_1 - P_2 / P_1 = x_T$.

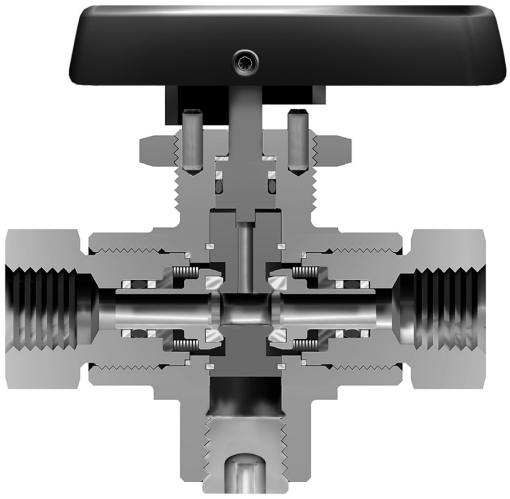

Two-Way HB4L Design

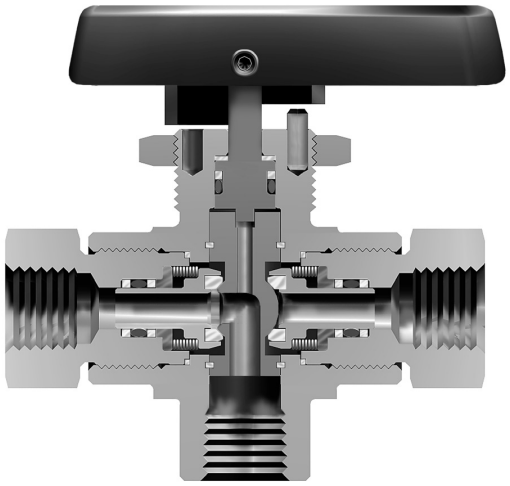

Three-Way HB4X Design

Parker Hannifin Corporation
Instrumentation Products Division
Jacksonville, AL USA
http://www.parker.com/ipd

Pressure vs. Temperature

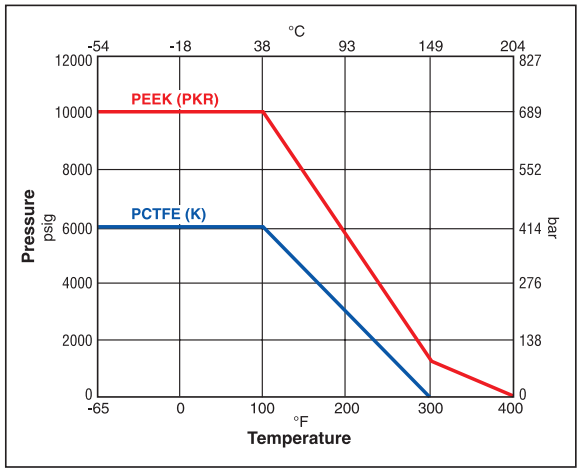

Note: To determine MPa, multiply bar by 0.1

This pressure versus temperature chart reflects the maximum temperature range of indicated materials.

When combining seat and seal materials, the most restrictive temperature rating of the seats or seals becomes the limiting factor on valve temperature range.

Temperature Ratings:

Nitrile (Nitrile) Rubber	40°F to 250°F (-40°C to 121°C)
Ethylene Propylene Rubber	-65°F to 300°F (-54°C to 149°C)
Fluorocarbon Rubber	-15°F to 400°F (-26°C to 204°C)

Flow Calculations, Two-Way HB4L

Inlet Pressure		Pressure Drop ΔP		Water @ 60°F (16°C)		Air @ 60°F (16°C)	
psig	bar	psig	bar	gpm	m3/hr	scfm	m3/hr
100	7	1	0.1	1.0	0.2	10.8	17.4
		10	0.7	3.2	0.7	32.0	50.7
		50	3.5	7.2	1.6	50.5	76.0
1000	69	10	0.7	3.2	0.7	101.3	171.3
		100	6.9	10.2	2.3	297.7	502.3
		500	34.5	22.8	5.2	446.7	749.6
3000	207	100	6.9	10.2	2.3	542.0	919.9
		1000	69.0	32.3	7.3	1297.0	2198.9
		1500	103.4	39.5	9.0	1327.2	2248.8
6000	414	1000	69.0	32.3	7.3	2158.5	3662.7
		2000	137.9	45.6	10.4	2188.5	4388.6
		3000	206.8	55.9	12.7	2647.9	4486.8
10000	689	1000	69.0	32.3	7.3	2954.3	5020.2
		2000	137.9	45.6	10.4	3818.4	6487.0
		3000	206.8	55.9	12.7	4236.2	7194.9

Flow Calculations, Three-way HB4X

Inlet Pressure		Pressure Drop ΔP		Water @ 60°F (16°C)		Air @ 60°F (16°C)	
psig	bar	psig	bar	gpm	m3/hr	scfm	m3/hr
100	7	1	0.1	0.6	0.1	6.6	10.6
		10	0.7	2.0	0.4	20.0	31.9
		50	3.5	4.4	1.0	37.1	57.4
1000	69	10	0.7	2.0	0.4	61.8	104.4
		100	6.9	6.2	1.4	187.2	316.1
		500	34.5	13.9	3.1	337.4	567.7
3000	207	100	6.9	6.2	1.4	333.1	565.4
		1000	69.0	19.6	4.5	903.4	1532.8
		1500	103.4	24.0	5.5	1004.4	1703.2
6000	414	1000	69.0	19.6	4.5	1393.5	2365.2
		2000	137.9	27.7	6.3	1803.8	3060.4
		3000	206.8	34.0	7.7	2004.9	3399.8
10000	689	1000	69.0	19.6	4.5	1858.9	3159.0
		2000	137.9	27.7	6.3	2499.6	4247.2
		3000	206.8	34.0	7.7	2903.0	4932.1

Parker Hannifin Corporation
Instrumentation Products Division
Jacksonville, AL USA
http://www.parker.com/ipd

Tel: +45 63 12 83 00 | Email: ps@hymatik.com | www.hymatik.com | Hvidkaervej 27a, DK-5250 Odense SV, Denmark

Dimensions, Pressure Data

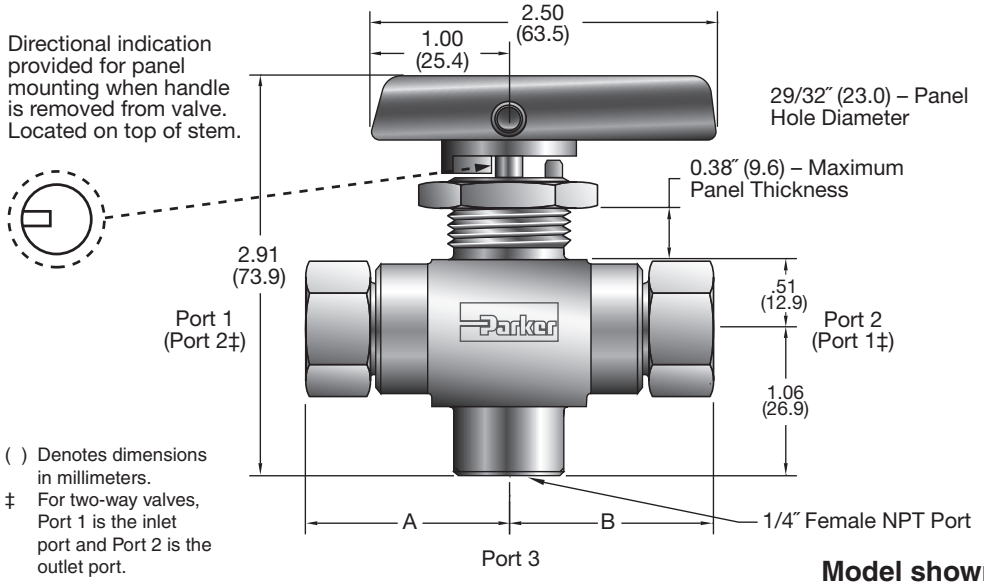

Model shown:
4F-HB4XPKR-SSP

HB

Basic Part Number*	Pressure Rating @100°F (38°C) psig	bar	End Connection Port 1 Port 2	Dimensions A‡ inch	A‡ mm	B‡ inch	B‡ mm
2F-HB4	10,000	689	1/8" Female NPT	1.47	37.3	1.47	37.3
4F-HB4**			1/4" Female NPT	1.47	37.3	1.47	37.3
4FL-HB4			1/4" Female NPT (Long)	1.97	50.0	1.97	50.0
4A-HB4			1/4" A-LOK® Compression	2.07	52.6	2.07	52.6
4Z-HB4			1/4" CPI™ Compression	2.07	52.6	2.07	52.6
M6A-HB4			6 mm A-LOK® Compression	2.07	52.6	2.07	52.6
M6Z-HB4			6 mm CPI™ Compression	2.07	52.6	2.07	52.6
6A-HB4	6,600†	455	3/8" A-LOK® Compression	2.19	55.6	2.19	55.6
6Z-HB4			3/8" CPI™ Compression	2.19	55.6	2.19	55.6
8A-HB4	6,300†	434	1/2" A-LOK® Compression	2.30	58.4	2.30	58.4
8Z-HB4			1/2" CPI™ Compression	2.30	58.4	2.30	58.4
M8A-HB4	7,975†	550	8 mm A-LOK® Compression	2.07	52.6	2.07	52.6
M8Z-HB4			8 mm CPI™ Compression	2.07	52.6	2.07	52.6
M10A-HB4	6,525†	450	10 mm A-LOK® Compression	2.19	55.6	2.19	55.6
M10Z-HB4			10 mm CPI™ Compression	2.19	55.6	2.19	55.6
M12A-HB4	6,162†	425	12 mm A-LOK® Compression	2.30	58.4	2.30	58.4
M12Z-HB4			12 mm CPI™ Compression	2.30	58.4	2.30	58.4

* Flow configurations are two-way (HB4L) and three-way (HB4X); Seat materials are PEEK (Polyetheretherketone) and PCTFE (Polychlorotrifluoroethylene).

Dimensions in inches/millimeters are for reference only, subject to change.

** Designed with shorter end-to-end dimensions than the 4FL model to save space.

† Reduced pressure rating is determined by the maximum rated pressure of the tubing as stated in the Parker Instrument Tubing Selection Guide Bulletin 4200-TS. The working pressure ratings are limited by the seat material (PCTFE – 6,000 psig (414 bar) maximum and PEEK – 10,000 psig (689 bar) maximum) and the temperature of the application.

†† For CPI™ and A-LOK®, dimensions are measured with nuts in the finger tight position.

Parker Hannifin Corporation
Instrumentation Products Division
Jacksonville, AL USA
http://www.parker.com/ipd

Tel: +45 63 12 83 00 | Email: ps@hymatik.com | www.hymatik.com | Hvidkaervej 27a, DK-5250 Odense SV, Denmark

Materials of Construction

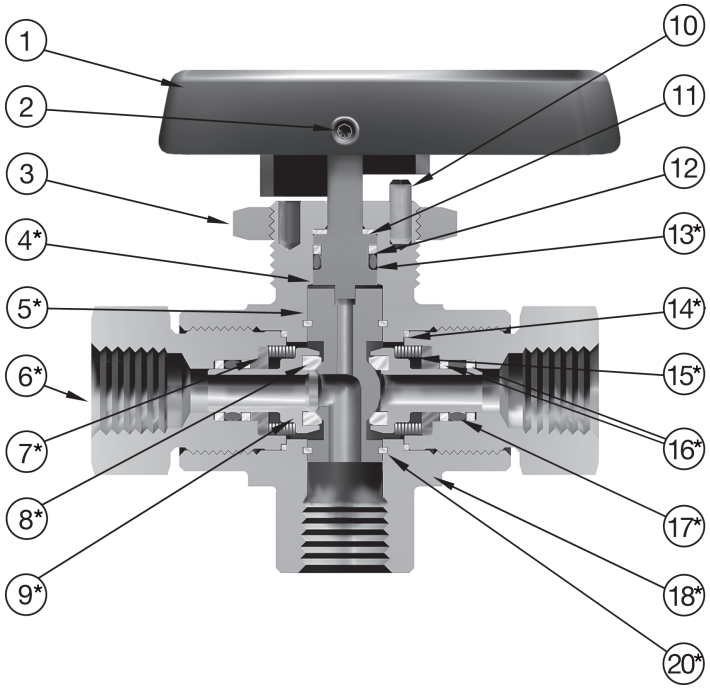

No.	Part Description	6,000 psi (414 bar)	10,000 psi (689 bar)
1	Handle/insert	Nylon 6/6/316 SS	Nylon 6/6/316 SS
2	Handle screw	Stainless steel	Stainless steel
3	Panel nut	316 Stainless steel	316 Stainless steel
4*	Stem	ASTM A 479 Type 316	ASTM A 479 Type 316
5*	Ball trunnion	ASTM A 479 Type 316	ASTM A 479 Type 316
6*	Port end connector	ASTM A 479 Type 316	ASTM A 479 Type 316
7*	Spring washer	ASTM A 479 Type 316	ASTM A 479 Type 316
8*	Seat	PCTFE	PEEK
9*	Seat retainer	ASTM A 276 Type 316	ASTM A 276 Type 316
10	Handle stop pins	302 Stainless steel	302 Stainless steel
11	Stem washer	PEEK	PEEK
12	Stem O-ring back-up	PTFE	PTFE
13*	Stem O-ring	Fluorocarbon rubber**	Fluorocarbon rubber**
14*	Connector end seal	PEEK	PEEK
15*	Spring	ASTM A 313 Type 631	ASTM A 313 Type 631
16*	Seat retainer O-ring back-up	PTFE	PTFE
17*	Seat retainer O-ring	Fluorocarbon rubber**	Fluorocarbon rubber**
18*	Valve body	ASTM A 276 Type 316	ASTM A 276 Type 316
19*	Pipe plug (Not shown/HB4L only)	316 Stainless steel	316 Stainless steel
20*	Trunnion bearing	PEEK	PEEK

* Wetted parts
** Optional elastomer seals available
Lubrication: Perfluorinated polyether

Parker Hannifin Corporation
Instrumentation Products Division
Jacksonville, AL USA
http://www.parker.com/ipd

Tel: +45 63 12 83 00 | Email: ps@hymatik.com | www.hymatik.com | Hvidkaervej 27a, DK-5250 Odense SV, Denmark

HB Series Ball Valves

How to Order

The correct part number is easily derived from the following example and ordering chart. The five product characteristics required are coded as shown in the chart.

Example below describes a HB4X, three-way ball valve with 1/4" CPI™ compression end connections for ports 1 and 2, PEEK seats and fluorocarbon rubber seals, stainless steel body construction, and a panel mounting nut. Port 3 is always a 1/4" Female NPT port.

Example 1: **4Z** – **HB4XPKR** – – **SSP**

Port 1& 2	–	Valve Series	Seat Material	–	Seal Material	–	Body Material

Port 1 & 2		Valve Series		Seat Material		Seal Material		Body Material	
2F	1/8" Female NPT	**HB4L**	2-way	**PKR**	PEEK – Polyetheretherketone	**Blank**	Fluoro-carbon Rubber	**SSP**	Stainless Steel with Panel Nut
4F	1/4" Female NPT	**HB4X**	3-way	**K**	PCTFE – Polychloro-trifluoroethylene	**BN**	Nitrile Rubber		
4FL	1/4" Female NPT (Long)					**EPR**	Ethylene Propylene Rubber		
4A	1/4" A-LOK® Compression								
4Z	1/4" CPI™ Compression								
4MP7	1/4" MPI™ Compression								
6A	3/8" A-LOK® Compression								
6Z	3/8" CPI™ Compression								
6MP7	3/8" MPI™ Compression								
8A	1/2" A-LOK® Compression								
8Z	1/2" CPI™ Compression								
M6A	6 mm A-LOK® Compression								
M6Z	6 mm CPI™ Compression								
M8A	8 mm A-LOK® Compression								
M8Z	8 mm CPI™ Compression								
M10A	10 mm A-LOK® Compression								
M10Z	10 mm CPI™ Compression								
M12A	12 mm A-LOK® Compression								
M12Z	12 mm CPI™ Compression								

Parker Hannifin Corporation
Instrumentation Products Division
Jacksonville, AL USA
http://www.parker.com/ipd

Actuator Options

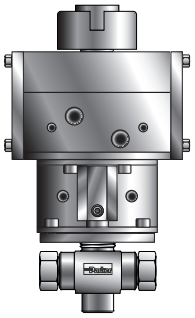

Double Acting (61AD) Pneumatic Actuator

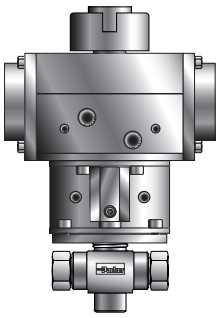

Spring Return (61AC & AO) Pneumatic Actuator

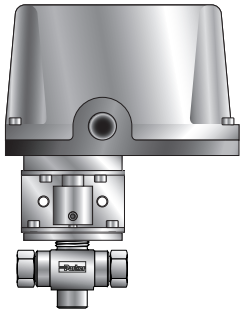

70, 80 & 90 Series Electric Actuator

How to Order Options

Oxygen Cleaning – Add the suffix **-C3** to the end of the part number to receive valves cleaned and assembled for oxygen service in accordance with Parker Specification ES8003.
Example: 4A-HB4LPKR-EPR-SSP-**C3**

Pneumatic Actuators – For detailed actuator information, refer to the Pneumatic Actuators section of this catalog. For factory assembly, add the actuator part number as the suffix to the valve part number.
Example: 4FL-HB4XK-SSP-**61ACX-2**

For field installation, specify the actuator desired. **Example: 61ACX-2**

The appropriate mounting hardware may be obtained by adding the valve series and actuator size to the prefix **MK-**. **Example: MK**-HB4X-61

Electric Actuators – For detailed actuator information, refer to the Electric Actuators section of this catalog. For factory assembly, add the actuator part number as the suffix to the valve part number.
Example: 6A-HB4XPKR-SSP-**71XA**

For field installation, specify the actuator desired **Example: 71XA**

The appropriate mounting hardware may be obtained by adding the valve series and actuator series to the prefix **MK-**. **Example: MK**-HB4X-70

How to Order Maintenance Kits

Lock-Out Devices

For field installation, simply substitute the correct valve series number after LD. **Example: LD**-HB4L

Handle Kits: HB4-Handle-Color (**Example:** HB4-HANDLE-RED) – Consists of a red handle and handle screw.

Two-way Seal Kits: KIT-HB4LPKR-SS or KIT-HB4LK-SS – Consists of a two-way trunnion, springs, stem washers, stem seal, back-up ring, end connector seals, seat springs, seat retainer seals, seat retainer back-up rings, and seat assemblies.

Three-way Seal Kits: KIT-HB4XPKR-SS or KIT-HB4XK-SS – Consists of a three-way trunnion, springs, stem washers and stem seal, back-up ring, end connector seals, seat springs, seat retainer seals, seat retainer back-up rings, and seat assemblies.

Parker Hannifin Corporation
Instrumentation Products Division
Jacksonville, AL USA
http://www.parker.com/ipd

Tel: +45 63 12 83 00 | Email: ps@hymatik.com | www.hymatik.com | Hvidkaervej 27a, DK-5250 Odense SV, Denmark

Pneumatic Actuators

Introduction

Parker 60 Series spring return (AC/AO) or double acting (AD) rack and pinion actuators are compact, simply designed devices that are quality engineered to provide high torque outputs and a high cycle, trouble-free life.

A compact, dual opposed rack and pinion design and guide band suspension combine to produce a symmetrically balanced, center mount actuator. In addition, the actuator has a short powerful stroke, rapid response, and fully concentric operating load capability which ensures optimum performance.

Features

- Three point suspension system uses carbon filled PTFE guide bands for piston alignment and rack support
- Dual opposed piston design uses air pressure on two pistons to deliver a balanced force to the pinion gear
- Patented balanced piston design results in even distribution of bearing loads and eliminates piston tilting
- Multiple spring concept permits actuator use at 40 to 120 psig (2.8 to 8.3 bar) air supply requirements
- Suitable for use with dry or lubricated air, non-corrosive gas, or light hydraulic oil
- Aluminum alloy body construction with two component polyurethane coating
- Manual override

Specifications

Operating Pressure

90° Models: 40 to 120 psig (2.8 to 8.3 bar) maximum
AC – Normally Closed Spring Return
AD – Double Acting
AO – Normally Open Spring Return
180° Models: 80 psig (5.5 bar) maximum
ACX – Spring Return
ADX – Double Acting

Temperature Range

-4°F to 175°F (-20°C to 79°C)

Optional high and low temperature ranges available

Options

- Solenoid valve
- Rotary limit switch with valve position indicator
- Breather block
- Dual mount actuator

Operation

Actuators are manufactured with an integral air manifold and internal porting. The air manifold is designed for direct mounting of solenoid valves. This eliminates the need for external tubing and simplifies installation. For applications not requiring a solenoid valve, the air manifold inlet ports are marked “A” and “B”. Air inlet port “A” will rotate the actuator counter-clockwise. Spring return actuators fail clockwise.

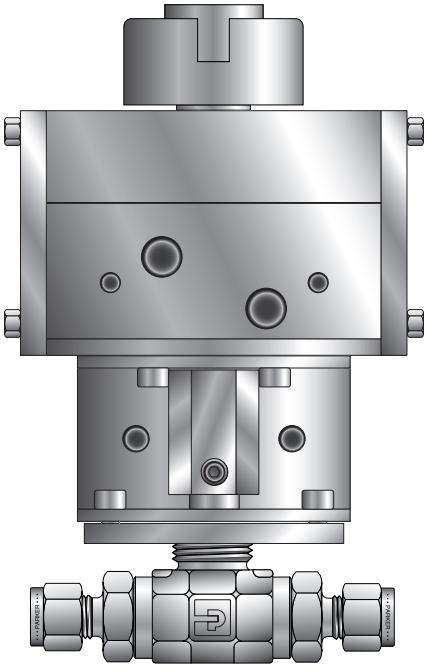

Model Shown: 4Z-B6LJ-V-SS-61AD

Parker Hannifin Corporation
Instrumentation Products Division
Jacksonville, AL USA
http://www.parker.com/ipd

Dimensional Data for 61 Model

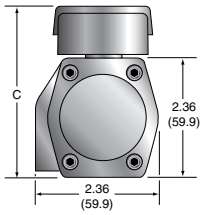

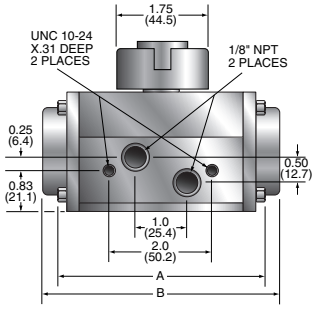

61 Actuator

( ) Denotes dimensions in millimeters

Dim	61AD		61AC/O		61ADX		61ACX	
	Inch	mm	Inch	mm	Inch	mm	Inch	mm
A	4.06	103.1	–	–	6.10	154.9	–	–
B	–	–	4.65	118.1	–	–	8.50	215.9
C1	3.38	85.9	3.38	85.9	3.38	85.9	3.38	85.9
C2	2.36	59.9	2.36	59.9	2.36	59.9	2.36	59.9

C1 – Single Mount, C2 – Dual Mount

Dimensions in inches/millimeters are for reference only, subject to change.

Dimensional Data for 62, 63, 64, 65, 66, 68 and 69 Models

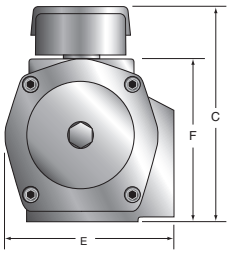

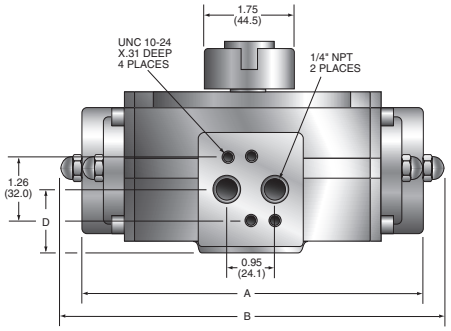

Model	A		B		C				D		E		F	
					Single Mount		Dual Mount							
	Inch	mm	Inch	mm	Inch	mm	Inch	mm	Inch	mm	Inch	mm	Inch	mm
62AD	6.26	159.0	–	–	4.17	105.9	3.15	80.0	1.26	32.0	2.91	73.9	3.15	80.0
62AC/O	–	–	6.77	172.0	4.17	105.9	3.15	80.0	1.26	32.0	2.91	73.9	3.15	80.0
63AD	7.09	180.1	–	–	4.68	118.9	3.86	98.0	1.32	33.5	3.39	86.1	3.66	93.0
63AC/O	–	–	8.03	204.0	4.68	118.9	3.86	98.0	1.32	33.5	3.39	86.1	3.66	93.0
ADX64	6.34	161.0	–	–	5.00	127.0	3.98	101.1	1.69	42.9	4.27	108.5	3.98	101.1
ACX64	–	–	7.17	182.1	5.00	127.0	3.98	101.1	1.69	42.9	4.27	108.5	3.98	101.1
65AD	7.83	198.9	–	–	5.15	130.8	4.13	104.9	1.54	39.1	3.86	98.0	4.13	104.9
65AC/O	–	–	9.8	248.9	5.15	130.8	4.13	104.9	1.54	39.1	3.86	98.0	4.13	104.9
66AD	8.7	221.0	–	–	5.67	144.0	4.65	118.1	1.59	40.4	4.25	108.0	4.65	118.1
66AC/O	–	–	10.51	267.0	5.67	144.0	4.65	118.1	1.59	40.4	4.25	108.0	4.65	118.1
69AD	11.14	283.0	–	–	6.65	168.9	5.63	143.0	1.99	50.5	5.04	128.0	5.63	143.0
69AC/O	–	–	14.17	359.9	6.65	168.9	5.63	143.0	1.99	50.5	5.04	128.0	5.63	143.0

Dimensions in inches/millimeters are for reference only, subject to change.

Pneu Act

Parker Hannifin Corporation
Instrumentation Products Division
Jacksonville, AL USA
http://www.parker.com/ipd

Tel: +45 63 12 83 00 | Email: ps@hymatik.com | www.hymatik.com | Hvidkaervej 27a, DK-5250 Odense SV, Denmark

Pneumatic Actuators

Valve Dimensional Data

Valve Series	A		B		C		D		E	
	Inch	mm	Inch	mm	Inch	mm	Inch	mm	Inch	mm
B2	2.23	56.6	1.61	40.9	0.80	20.3	0.75	19.1	1.50	38.1
B6	2.49	63.2								
B8	2.91	73.9								
MB2	2.33	59.2								
MB4	2.33	59.2								
MB6	2.48	63.0								
HB4	2.70	68.6								
SWB4	2.57	65.2	1.25	31.7	0.82	20.08				
SWB8	2.79	70.9								
SWB12	2.95	74.9								
SWB16	3.14	79.7								

Dimensions in inches/millimeters are for reference only, subject to change.

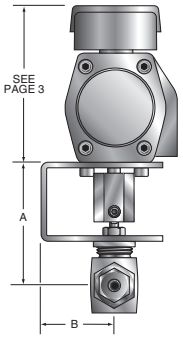

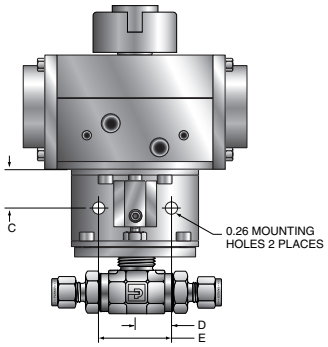

Model Shown:
4Z-B6LJ-V-SS-61AC-2

Recommended Actuators*

Valve Series	Double Acting AD	Spring Return AO	Spring Return AC
B2LJ	61AD	61AO-2	61AC-2
B2LJ2	61AD	61AO-2	61AC-2
B2XJ	61ADX	61ACX-2	61ACX-2
B2XJ2	61ADX	61ACX-2	61ACX-2
B6LJ	61AD	61AO-2	61AC-2
B6LJ2	61AD	61AO-2	61AC-2
B6LS2	61AD	61AO-2	61AC-2
B6LPKR	61AD	61AO-2	61AC-2
B6LSPKR	61AD	61AO-2	61AC-2
B6XJ	61ADX	61ACX-2	61ACX-2
B6XJ2	61ADX	61ACX-2	61ACX-2
B6XS2	61ADX	61ACX-2	61ACX-2
B6XPKR	61ADX	61ACX-2	61ACX-2
B6XSPKR	61ADX	61ACX-2	61ACX-2
B8LJ	61AD	61AO-2	61AC-2
B8LJ2	61AD	62AO-3	62AC-3
B8LS2	61AD	62AO-3	62AC-3
B8LPKR	61AD	62AO-3	62AC-3
B8LSPKR	61AD	62AO-3	62AC-3
B8XJ	61ADX	61ACX-2	61ACX-2
B8XJ2	61ADX	ACX64-3	ACX64-3
B8XS2	61ADX	ACX64-3	ACX64-3
B8XPKR	61ADX	ACX64-3	ACX64-3
B8XSPKR	61ADX	ACX64-3	ACX64-3
HB4LPKR	61AD	62AO-3	62AC-3
HB4LK	61AD	61AO-2	61AC-2
HB4XPKR	61ADX	ACX62-3	ACX62-3
HB4XK	61ADX	61ACX-2	61ACX-2
MB2A	61AD	61AO-2	61AC-2
MB2L	61AD	61AO-2	61AC-2
MB2X	61ADX	61ACX-2	61ACX-2
MB4A	61AD	61AO-2	61AC-2
MB4L	61AD	61AO-2	61AC-2
MB4X	61ADX	61ACX-2	61ACX-2
MB6A	61AD	61AO-2	61AC-2
MB6L	61AD	61AO-2	61AC-2
MB6X	61ADX	61ACX-2	61ACX-2
SWB4	61AD	61AO-2	61AC-2
SWB8	61AD	62AO-3	62AC-3
SWB12	61AD	62AO-3	62AC-3
SWB16	62AD	63AO-3	63AC-3

* With 60 psig (4.1 bar) actuation pressure.

Parker Hannifin Corporation
Instrumentation Products Division
Jacksonville, AL USA
http://www.parker.com/ipd

Tel: +45 63 12 83 00 | Email: ps@hymatik.com | www.hymatik.com | Hvidkaervej 27a, DK-5250 Odense SV, Denmark

90° Models (AC, AO, and AD)

Performance Characteristics

Series	Bore		Stroke		Weight				Operating Time	Air Consumption		Air Consumption	
					AD		AC/AO			in^3		cc	
	Inch	mm	Inch	mm	lb	kg	lb	kg	sec	Port A	Port B*	Port A	Port B*
61	1.8	45.7	0.5	12.7	1.3	0.6	1.5	0.7	0.4	3.1	3.7	50.8	60.7
62	2.2	55.9	0.6	15.2	2.9	1.3	3.7	1.7	0.5	6.1	6.7	100.0	109.8
63	2.8	71.1	0.7	17.8	4.0	1.8	5.3	2.4	0.7	9.8	13.4	160.7	219.7
65	3.1	78.7	0.9	22.1	5.3	2.4	7.9	3.6	1.1	20.1	22.0	329.5	360.7
66	3.6	91.4	1.0	25.4	6.8	3.1	10.1	4.6	1.2	21.4	29.9	350.8	490.2

*Double acting only

Dimensions in inches/millimeters are for reference only, subject to change.

AD Torques

Series	40 psig (2.8 bar)		60 psig (4.1 bar)		80 psig (5.5 bar)		100 psig (6.9 bar)	
	in-lb	Nm	in-lb	Nm	in-lb	Nm	in-lb	Nm
61	59	6.7	89	10.1	119	13.4	149	16.8
62	109	12.3	165	18.6	220	24.9	276	31.2
63	205	23.2	309	34.9	413	46.7	518	58.5
65	312	35.2	471	53.2	630	71.2	789	89.1
66	461	52.1	696	78.6	930	105.1	1165	131.6

AC and AO Torques

Series	Spring Set	Air Torque								Spring Torque	
		40 psig (2.8 bar)		60 psig (4.1 bar)		80 psig (5.5 bar)		100 psig (6.9 bar)			
		in-lb	Nm	in-lb	Nm	in-lb	Nm	in-lb	Nm	in-lb	Nm
61	2	–	–	23	2.6	55	6.2	87	9.8	41	4.6
62	2	44	5.0	103	11.6	162	18.3	220	24.9	39	4.4
	3	8	0.9	66	7.5	126	14.2	185	20.9	58	6.6
	4	–	–	31	3.5	90	10.2	149	16.8	78	8.8
	5	–	–	–	–	54	6.1	113	12.8	98	11.1
	6	–	–	–	–	18	2.0	77	8.7	117	13.2
63	2	82	9.3	193	21.8	304	34.3	413	46.7	74	8.4
	3	15	1.7	126	14.2	236	26.7	346	39.1	110	12.4
	4	–	–	58	6.6	169	19.1	279	31.5	146	16.5
	5	–	–	–	–	101	11.4	212	24.0	183	20.7
	6	–	–	–	–	34	3.8	144	16.3	220	24.9
65	2	117	13.2	285	32.2	453	51.2	622	70.3	117	13.2
	3	10	1.1	178	20.1	347	39.2	515	58.2	175	19.8
	4	–	–	72	8.1	240	27.1	408	46.1	234	26.4
	5	–	–	–	–	133	15.0	301	34.0	292	33.0
	6	–	–	–	–	26	2.9	195	22.0	351	39.7
66	2	192	21.7	441	49.8	690	78.0	939	106.1	161	18.2
	3	43	4.9	293	33.1	542	61.2	790	89.3	242	27.3
	4	–	–	143	16.2	392	44.3	641	72.4	323	36.5
	5	–	–	–	–	244	27.6	492	55.6	403	45.5
	6	–	–	–	–	95	10.7	344	38.9	484	54.7

Parker Hannifin Corporation
Instrumentation Products Division
Jacksonville, AL USA
http://www.parker.com/ipd

Tel: +45 63 12 83 00 | Email: ps@hymatik.com | www.hymatik.com | Hvidkaervej 27a, DK-5250 Odense SV, Denmark

180° Models (ACX and ADX)

Performance Characteristics

Series	Bore		Stroke		Weight AD		Weight AC		Operating Time	Air Consumption in³		Air Consumption cc	
	Inch	mm	Inch	mm	lb	kg	lb	kg	sec	Port A	Port B*	Port A	Port B*
61	1.8	45.7	1.0	25.4	1.9	0.9	2.4	1.1	0.8	4.5	5.7	73.8	93.4

*Double acting only

Dimensions in inches/millimeters are for reference only, subject to change.

ADX Torques

Series	40 psig (2.8 bar)		60 psig (4.1 bar)		80 psig (5.5 bar)	
	in-lb	Nm	in-lb	Nm	in-lb	Nm
61	59	6.7	89	10.1	119	13.4

ACX Torques

Series	Spring Set	Air Torque 40 psig (2.8 bar)		Air Torque 60 psig (4.1 bar)		Air Torque 80 psig (5.5 bar)		Spring Torque	
		in-lb	Nm	in-lb	Nm	in-lb	Nm	in-lb	Nm
61	2	–	–	25	2.8	57	6.4	39	4.4

How to Order Actuators

Factory Assembled

Add the actuator model designation as a suffix to the ball valve part number.
Example: 4Z-B6LJ2-SS-61AC-2. Describes a B6 ball valve with a normally closed actuator.

For Field Assembly

Simply specify the actuator.
Example: 65AC-3. Mounting bracket kits are required when mounting actuators to valves.

With Mounting Brackets

Specify the ball valve series and seat material followed by the actuator.
Examples: B6LJ-61AO-2, MB6XPFA-61ACX, SWB12LRT-62AC-3

Options

High Temperature Seals – Extends the high temperature from 175°F (79°C) to 250°F (121°C) and to 400°F (204°C) on special Series 62 and 63 90° models.

Low Temperature Seals – Extends the low temperature from –4°F (-20°C) to –40°F (-40°C).

Solenoid Valve (Single coil) – Mounts directly to the actuator inlet manifold. NEMA 4 or 7 housings with voltages of 24 VDC, 120 VAC, and 240 VAC. A manual override is standard.

Limit Switch – Rugged, fully enclosed unit contains two SPDT 1A-125VAC/1A-24VDC proximity switches operated by two independently adjustable cams on a rotating shaft coupled directly to the actuator auxiliary drive. Features a visual valve position indicator. Meets NEMA 4, 4X, 7, and 9 classifications for weather-resistant and hazardous locations.

Breather Block – A direct mount diverter module redirects instrument quality air to the spring chamber during the spring stroke (fail stroke) of AC and AO actuators. Ideal for corrosive, wet, or dusty environments. Also improves spring stroke speed and allows the solenoid valve to be mounted to it.

Dual Mount Actuator – Two valves may be actuated with a single actuator. Available with both valves open, both closed, or one open and one closed.

Note: Parker pneumatically actuated B Series Ball Valves should be ordered with elastometric stem packing and seals or the optional live-loaded PTFE packing. This reduces the need for any further packing adjustment after receipt from the factory.

How to Order Options

High Temperature Seals – Add the suffix **–HT** to the end of the part number for service up to 250°F (121°C). Add the suffix **–HT4** to the end of the part number for service up to 400°F (204°C). **NOTE:** The **–HT4** option is only available on series 62 and 63 90° models. **Example:** 2F-HB4LK-BN-SS-61AD**-HT**

Low Temperature Seals – Add the suffix **–LT** to the end of the part number.
Example: 4A-MB4LPFA-SS-61AC-2**-LT**

Accessories – Add one of the following suffixes to the end of the part number.
Example: 16F-SWB16L-RT-T-SS-63AC-3**-2D**

Suffix	Accessory
Single Option	
-1A	Breather Block
-1B	Solenoid Valve (NEMA 4, 120 VAC)
-1C	Solenoid Valve (NEMA 7, 120 VAC)
-1D	Solenoid Valve (NEMA 4, 24 VDC)
-1E	Solenoid Valve (NEMA 7, 24 VDC)
-1F	Solenoid Valve (NEMA 4, 240 VAC)
-1G	Solenoid Valve (NEMA 7, 240 VAC)
-4H	Limit Switch – Two SPDT switches with mounting kit
Double Option	
-2A	Breather Block, Solenoid Valve (NEMA 4, 120 VAC)
-2B	Breather Block, Solenoid Valve (NEMA 7, 120 VAC)
-2C	Breather Block, Solenoid Valve (NEMA 4, 24 VDC)
-2D	Breather Block, Solenoid Valve (NEMA 7, 24 VDC)
-2E	Breather Block, Solenoid Valve (NEMA 4, 240 VAC)
-2F	Breather Block, Solenoid Valve (NEMA 7, 240 VAC)
-5G	Limit Switch, Solenoid Valve (NEMA 4, 120 VAC)
-5H	Limit Switch, Solenoid Valve (NEMA 7, 120 VAC)
-5J	Limit Switch, Solenoid Valve (NEMA 4, 24 VDC)
-5K	Limit Switch, Solenoid Valve (NEMA 7, 24 VDC)
-5L	Limit Switch, Solenoid Valve (NEMA 4, 240 VAC)
-5M	Limit Switch, Solenoid Valve (NEMA 7, 240 VAC)
Triple Option	
-6A	Breather Block, Limit Switch, Solenoid Valve (NEMA 4, 120 VAC)
-6B	Breather Block, Limit Switch, Solenoid Valve (NEMA 7, 120 VAC)
-6C	Breather Block, Limit Switch, Solenoid Valve (NEMA 4, 24 VDC)
-6D	Breather Block, Limit Switch, Solenoid Valve (NEMA 7, 24 VDC)
-6E	Breather Block, Limit Switch, Solenoid Valve (NEMA 4, 240 VAC)
-6F	Breather Block, Limit Switch, Solenoid Valve (NEMA 7, 240 VAC)

Note: NEMA and voltage ratings apply only to Solenoid Valves.

Dual Mount Actuator – Add **–DVM** as a suffix to the end of the part number.
Example: 6A-B6LPKR-SS-61AC-2**-DVM**

With DVM dual mount valve options, the following are standard arrangements: Two-way valves are provided in their failed position (in their closed position with AD actuators). Three-way valves are provided as shown below. Contact the factory for details on other available options.

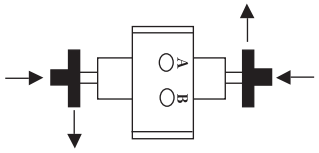

How to Order Mounting Bracket Kits

Add the valve series and actuator model designation as a suffix to **MK-**. **Example: MK**-MB4L-61
Describes a mounting kit for a MB Series ball valve with a 61 Series actuator.

Parker Hannifin Corporation
Instrumentation Products Division
Jacksonville, AL USA
http://www.parker.com/ipd

Tel: +45 63 12 83 00 | Email: ps@hymatik.com | www.hymatik.com | Hvidkaervej 27a, DK-5250 Odense SV, Denmark

Electric Actuators

Introduction

Parker 70, 80 and 90 Series Electric Actuators are designed for electric actuation of Parker's B Series, MB Series, HB Series, and SWB Series Ball Valves. They provide reliable, cost effective, remote valve actuation. The simplicity of design provides accessible and easy wiring installation. The convenience and accuracy of advanced modular electronics gives the user the ability to wire in accessories without all the hard wiring hassles. The master PC ("mother") board accepts plug-in modular ("daughter") boards to allow for a variety of accessory functions. Other than connecting a power source, there is no internal wiring to tangle with, ever. With a variety of accessories as well as superior actuator design, Parker's Ball Valves with the 70, 80 or 90 Series actuators are the obvious choice.

70 Series

Specifications

- Voltage: 24, 115 or 230 VAC (50/60 Hz); 12 or 24 VDC
- Torque: 150, 300, 600 in lb (17, 34, 68 N m)
- Enclosure: PVC composite
- Duty cycle: 25% (VAC models); 100% (VDC models)
- Actuator bolt pattern: ISO standard (5211)
- Conduit connection: 1/2" NPT
- Output shaft: Male, zinc plated steel
- Temperature limits (all models): 32°F to 150°F (0°C to 66°C); (-40°F [-40°C] minimum with heater and thermostat)

Features

- Single direction actuation
- PVC cover resists damage/UV radiation
- NEMA 4 (weatherproof), 4X (weatherproof with corrosion resistance)
- Hardened steel spur gear drive train provides consistent, long life performance
- Permanently lubricated gear train and bearings
- Low profile design/direct drive male output permit limited space installation
- Available for the B Series, MB Series, HB Series and SWB Series ball valves
- Available for two-way (90°) and three-way (180°) configurations
- Approximate weight: 6 lb (2.7 kg)
- Two Limit Switches: Single pole, double throw, rated for 1/3 HP, 10 amps @ 125/230 VAC, CSA certified

Options

- Additional limit switches and cams (specify up to 2)
- Heater and thermostat (For operation to -40°F [-40°C])

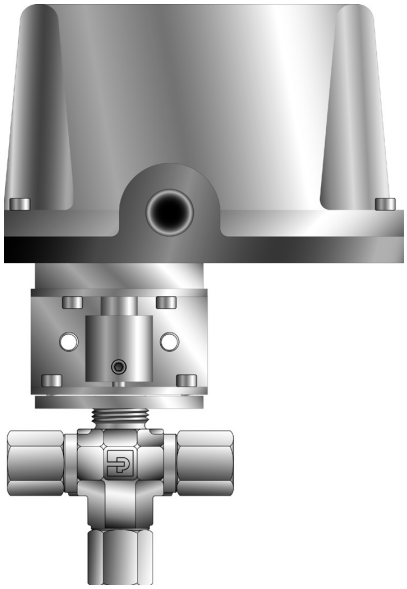

Model Shown:
4F-B6XJ-SS-71XA

70R Series

Specifications

- Same as 70 series

Features

- Bi-directional (reversing) actuation
- Position indicator

Options

- Same as 70 Series

Additional Options

- Additional limit switches and cams (specify up to 2)
- Valve position indication

Materials of Construction

Part	Material
Cover	Composite, PVC
Base	Diecast zinc alloy
Gear Train	Hardened steel
Output Shaft	Zinc plated steel
Finish	Powder coated epoxy

Parker Hannifin Corporation
Instrumentation Products Division
Jacksonville, AL USA
http://www.parker.com/ipd

70 Series Dimensional Data

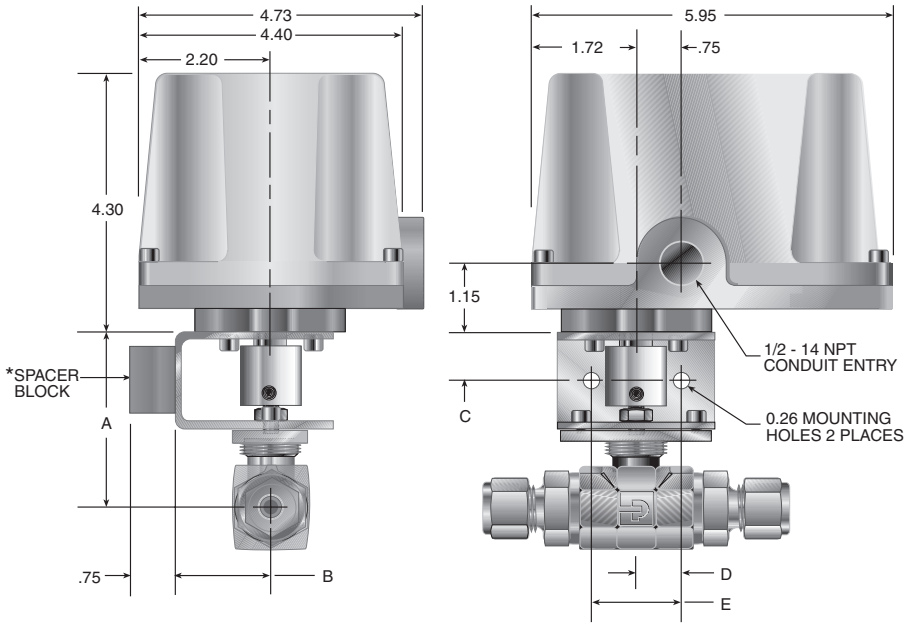

Valve Type	A		B		C		D		E	
	Inch	mm	Inch	mm	Inch	mm	Inch	mm	Inch	mm
B2	2.23	56.6	1.61	40.9	0.80	20.3	0.75	19.1	1.50	38.1
B6	2.49	63.2								
B8	2.91	73.9								
MB2	2.33	59.2								
MB4	2.33	59.2								
MB6	2.48	63.0								
HB4	2.70	68.6								
SWB4	2.57	64.3	1.25	31.7	0.82	20.8				
SWB8	2.79	70.9								
SWB12	2.95	74.9								
SWB16	3.14	79.8								

*Spacer block ordered separately, see page 48

Dimensions in inches/millimeters are for reference only, subject to change.

Actuator Model	Breakaway Torque in lb (N m)	Voltage	Duty Cycle	Cycle Time (sec)	Amps at Stall (Nominal)			Weight lb (kg)
					24 VAC	115 VAC	230 VAC	
71	150 (17.0)	24 VAC, 115 VAC or 230 VAC	25%	5	5.2	1.3	0.7	6 (2.7)
72	300 (34.0)			9	7.2	1.8	0.9	
73	600 (67.8)			16	7.2	1.3	0.7	

Actuator Model	Breakaway Torque in lb (N m)	Voltage	Duty Cycle	Cycle Time (sec)		Amps at Running Torque (Nominal)		Approx. Weight lb (kg)
				12 VDC	24 VDC	12 VDC	24 VDC	
72	300 (34.0)	24 VDC	100%	**	9	**	0.5	6 (2.7)
73	600 (67.8)	12 VDC or 24 VDC		16	16	1.3	0.5	

Note: Cycle times reflect 90° rotation. For 180° rotation, double the cycle time.
**12 VDC not available with this model.

Parker Hannifin Corporation
Instrumentation Products Division
Jacksonville, AL USA
http://www.parker.com/ipd

Elec Act

Tel: +45 63 12 83 00 | Email: ps@hymatik.com | www.hymatik.com | Hvidkaervej 27a, DK-5250 Odense SV, Denmark

Electric Actuators

80 Series

Specifications

- Voltage: 115 or 230 VAC (50/60 Hz)
- Torque: 150, 300, 600 in lb (17, 34, 68 Nm)
- Enclosure: Epoxy coated cast aluminum
- Duty cycle: 75%
- Actuator bolt pattern: ISO standard (5211)
- Conduit connection: 1/2" NPT (2 places)
- Output drive: ISO compatible female drive output
- Temperature limits (all models): 32°F to 150°F (0°C to 66°C); (-40°F [-40°C] minimum with heater and thermostat)

Features

- Bi-directional actuation
- Mother/daughter board, modular electronics technology
- Circuit board readily accepts plug-in connectors
- Variety of plug-in accessory boards are available
- Easy installation, no hard-wiring required
- NEMA 4 (weatherproof), 4X (weatherproof with corrosion resistance), NEMA 7 (explosion proof, gases) & 9 (explosion proof, dust) – Class I, Div. I, Groups C & D; Class II, Div. I, Groups E, F, and G; Class III
- Highly efficient spur gear power train
- Lubrication: Permanently lubricated gear train and bearings
- Manual override
- Visual position indicator
- Available for the B Series, MB Series, HB Series and SWB Series ball valves
- Available for two-way (90°) and three-way (180°) configurations
- Approximate weight: 17 lb (7.7 kg)
- CSA certified (Standard)
- Two Limit Switches: Single pole, double throw, rated for 1/3 HP, 10 amps @ 125/230 VAC, CSA certified

Options

- Additional limit switches and cams (specify up to 2)
- Heater and thermostat (For operation to -40°F [-40°C])
- CSA Certified

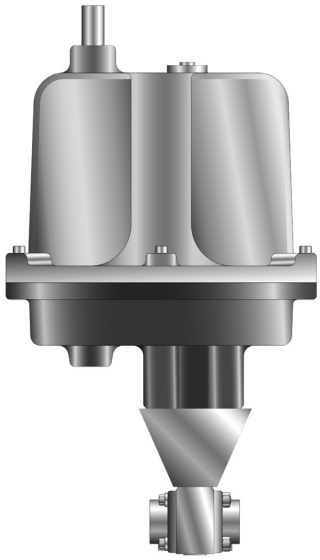

Model Shown:
8W-SWB8L-RT-V-SS-81CS2

Materials of Construction

Part	Material
Cover	Diecast aluminum alloy
Base	Diecast aluminum alloy
Gear Train	Hardened steel
Output Shaft	N/A
Finish	Powder coated epoxy

Testing

Actuator

All 70 and 80 Series Electric Actuators are factory tested for accurate cycle times and correct output signals at all applicable positions.

Valve

All valves are factory tested for internal and external leakage as described in their respective catalogs.

Valve / Actuator Assemblies

All valve/actuator assemblies are factory tested for proper valve actuation.

Parker Hannifin Corporation
Instrumentation Products Division
Jacksonville, AL USA
http://www.parker.com/ipd

90 Series

Specifications

- Voltage: Universal Power Board (230, 115, 24 VAC (50/60 Hz); 12 or 24 VDC)
- Torque: 150, 300, 600 in-lb (17, 34, 68 Nm)
- Enclosure: Epoxy coated cast aluminum
- Duty cycle: Continuous (After 1 hour duty cycle is reduced to 80%)
- Actuator bolt pattern: ISO standard (5211)
- Conduit connection: 3/4" NPT (3/4" to 1/2" reducing bushings included)
- Output drive: Square female drive output
- Temperature limits (all models): (-40°F [-40°C] minimum with heater and thermostat)

Features

- Bi-directional actuation
- Mother/daughter board, modular electronics technology
- Circuit board readily accepts plug-in connectors
- Variety of plug-in accessory boards built in
- Easy installation, no hard-wiring required
- Designed to meet NEMA 4 (weatherproof), 4X (weatherproof with corrosion resistance), NEMA 7 (explosion proof, gases) & 9 (explosion proof, dust) – Class I, Div. I, Group C&D; Class II, Div. I, Group E, F, & G; Class III
- Highly efficient spur gear power train
- Lubrication: Permanently lubricated gear train and bearings
- Position feedback and holding brake to prevent back-driving all models
- Visual position indicator
- Available for the B Series, MB Series, HB Series, and SWB Series ball valves
- Available for 2-way (90°) and 3-way (180°) configurations
- Approximate weight: 17 lb (7.7 kg); Model 94 weighs 31 lb (14.1 kg)
- CSA certified (Standard)
- Two limit switches: Single pole, double throw, rated for 1/2 HP, 15 amps @ 125 VAC, CSA certified
- Heater and thermostat (For operation to -40° F [-40° C])
- Back-up powered control Board

Materials of Construction

Part	Material
Cover	Diecast aluminum alloy
Base	Diecast aluminum alloy
Gear Train	Hardened steel
Output Shaft	N/A
Finish	Powder coated epoxy

Testing

Valve

All valves are factory tested for internal and external leakage as described in their respective catalogs.

Valve / Actuator Assemblies

All valve/actuator assemblies are factory tested for proper valve actuation.

Parker Hannifin Corporation
Instrumentation Products Division
Jacksonville, AL USA
http://www.parker.com/ipd

Tel: +45 63 12 83 00 | Email: ps@hymatik.com | www.hymatik.com | Hvidkaervej 27a, DK-5250 Odense SV, Denmark

80 and 90 Series Dimensional Data

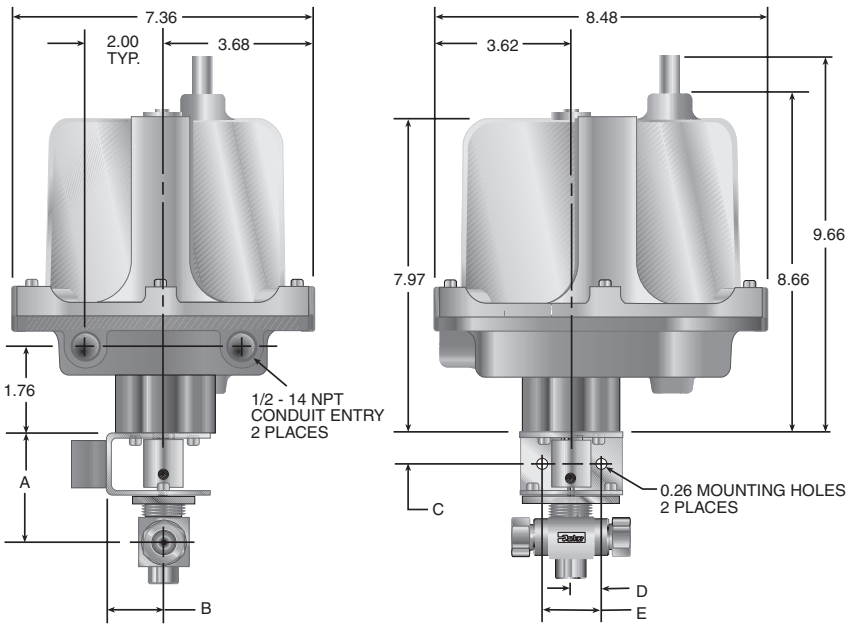

Valve Type	A		B		C		D		E	
	Inch	mm	Inch	mm	Inch	mm	Inch	mm	Inch	mm
B2	2.23	56.6	1.61	40.9	0.80	20.3	0.75	19.1	1.50	38.1
B6	2.49	63.2								
B8	2.91	73.9								
MB2	2.33	59.2								
MB4	2.33	59.2								
MB6	2.48	63.0								
HB4	2.70	68.6								
SWB4	2.57	64.3	1.25	31.7	0.82	20.8				
SWB8	2.79	70.9								
SWB12	2.95	74.9								
SWB16	3.14	79.8								

Dimensions in inches/millimeters are for reference only, subject to change.

Actuator Model	Breakaway Torque in lb (Nm)	115 or 230 VAC		
		Cycle Time (sec)	Duty Cycle	Amp** Draw (@115 VAC)
81	150 (17.0)	10	75%	0.3
82	300 (34.0)	15		
83	600 (67.8)	30		

Actuator Model	Breakaway Torque in lb (Nm)	24 VAC		
		Cycle Time (sec)	Duty Cycle	Amp** Draw (@115 VAC)
91	150 (17.0)	5	100%	1.5
92	300 (34.0)	10		
93	600 (67.8)	15		

Actuator Model	Breakaway Torque in lb (Nm)	12 VDC		
		Cycle Time (sec)	Duty Cycle	Amp** Draw (@115 VAC)
91	150 (17.0)	5	100%	1.9
92	300 (34.0)	10		
93	600 (67.8)	15		

Actuator Model	Breakaway Torque in lb (Nm)	24 VDC†		
		Cycle Time (sec)	Duty Cycle	Amp** Draw (@115 VAC)
91	150 (17.0)	3	100%	2.4
92	300 (34.0)	5		
93	600 (67.8)	8		

Note: Cycle times reflect 90° rotation. For 180° rotation, double the cycle time.
**Amps rated at full running torque. Amp draws shown are for 115 VAC and 12VDC only. For other voltages, consult the factory.
†24 VDC cycle time and amp draw are half of 12 VDC.

Duty Cycle: The percentage of time an electric actuator may operate in relation to the time it must rest. It equals "on time" divided by total elapsed time, multiplied by 100. For example, an actuator with a duty cycle of 25% and a cycle time of five seconds must rest for 15 seconds before operating again.

Elec Act

Parker Hannifin Corporation
Instrumentation Products Division
Jacksonville, AL USA
http://www.parker.com/ipd

Actuator Selection Tables

Valve Series	Flow Pattern	Seat Material	Suggested Actuator									
			70 Series					80 Series		90 Series		
			115 VAC	230 VAC	24 VAC	12 VDC	24 VDC	115 VAC	230 VAC	24 VAC	12 VDC	24 VDC
B Series	2-Way	All	71	71	71	73	72	81	81	91	91	91
B Series	3-Way	All	71X	71X	71X	73X	72X	81X	81X	91X	91X	91X
MB Series	2-Way	All	71	71	71	73	72	81	81	91	91	91
MB Series	3-Way	All	71X	71X	71X	73X	72X	81X	81X	91X	91X	91X
HB Series	2-Way	All	71	71	71	73	72	81	81	91	91	91
HB Series	3-Way	All	71X	71X	71X	73X	72X	81X	81X	91X	91X	91X
SWB4	2-Way	All	71	71	71	73	72	81	81	91	91	91
SWB8	2-Way	RT	71	71	71	73	72	81	81	91	91	91
SWB12	2-Way	RT	71	71	71	73	72	81	81	91	91	91
SWB16	2-Way	RT	71	71	71	73	72	81	81	91	91	91

How To Order Mounting Bracket Kits

Valve Series	Mounting Bracket Kit Part Numbers		
	70 Series	80 Series	90 Series
B2L	MK-B2L-70	MK-B2L-80	MK-B2L-90
B2X	MK-B2X-70	MK-B2X-80	MK-B2X-90
B6L	MK-B6L-70	MK-B6L-80	MK-B6L-90
B6X	MK-B6X-70	MK-B6X-80	MK-B6X-90
B8L	MK-B8L-70	MK-B8L-80	MK-B8L-90
B8X	MK-B8X-70	MK-B8X-80	MK-B8X-90
MB2L	MK-MB4L-70	MK-MB4L-80	MK-MB4L-90
MB2A	MK-MB4L-70	MK-MB4L-80	MK-MB4L-90
MB2X	MK-MB4X-70	MK-MB4X-80	MK-MB4X-90
MB4L	MK-MB4L-70	MK-MB4L-80	MK-MB4L-90
MB4A	MK-MB4L-70	MK-MB4L-80	MK-MB4L-90
MB4X	MK-MB4X-70	MK-MB4X-80	MK-MB4X-90
MB6L	MK-MB6L-70	MK-MB6L-80	MK-MB6L-90
MB6A	MK-MB6L-70	MK-MB6L-80	MK-MB6L-90
MB6X	MK-MB6X-70	MK-MB6X-80	MK-MB6X-90
HB4L	MK-HB4-70	MK-HB4-80	MK-HB4-90
HB4X	MK-HB4-70	MK-HB4-80	MK-HB4-90
SWB4L	MK-SWB4-70	MK-SWB4-80	MK-SWB4-90
SWB8L	MK-SWB8-70	MK-SWB8-80	MK-SWB8-90
SWB12L	MK-SWB12-70	MK-SWB12-80	MK-SWB12-90
SWB16L	MK-SWB16-70	MK-SWB16-80	MK-SWB16-90

Note: Mounting bracket kits include one mounting bracket, one nut plate, one coupling, six socket head cap screws, and two set screws.

If the bracket spacer block is required, order separately using the following nomenclature:

SPACER-ACT-.75

How To Order Actuators With Mounting Brackets: Specify the ball valve series and seat material followed by the actuator.

Examples: B6LJ-71C
MB6XPFA-71RX,
SWB12LRT-73CS1

Note: For the SWB Series, actuators can be down sized to fit the application. The actuator selection tables utilize valve combinations at full operating pressures.

Elec Act

How To Order Kits For Field Assembly

Kit Description	70 Series Part Number	80 Series Part Number	90 Series Part Number
Limit Switch (Two-Way Valve)	KIT-LSW-70-2WAY	KIT-LSW-80	KIT-LSW-90
Limit Switch (Three-Way Valve)	KIT-LSW-70-3WAY	KIT-LSW-80	KIT-LSW-90
Heater & Thermostat (115 VAC)*	KIT-HTR-70-115AC	KIT-HTR-80-115AC	KIT-HTR-90-115AC
Heater & Thermostat (230 VAC)*	KIT-HTR-70-230AC	KIT-HTR-80-230AC	KIT-HTR-90-230AC
Heater & Thermostat (24 VAC)*	KIT-HTR-70-24AC	KIT-HTR-80-24AC	KIT-HTR-90-24AC
Positioner (4-20mA, 115 VAC)	Not Available	KIT-POSITIONER-420-115AC	KIT-POSITIONER-420-115AC
Positioner (0-10 VDC, 115 VAC)	Not Available	KIT-POSITIONER-010-115AC	KIT-POSITIONER-010-115AC

*Heater and thermostat for DC voltages are factory installed only.

Parker Hannifin Corporation
Instrumentation Products Division
Jacksonville, AL USA
http://www.parker.com/ipd

Tel: +45 63 12 83 00 | Email: ps@hymatik.com | www.hymatik.com | Hvidkaervej 27a, DK-5250 Odense SV, Denmark

How to Order

Electric Actuators for Field Assembly

The correct part number is easily derived from the following example and ordering chart. The four product characteristics required are coded as shown in the chart.

Example 1, below, describes a Model 71, two-way electric actuator unit with a NEMA 4 and 4X rating, a 115 VAC motor with optional heater and thermostat.

Example 1: **71** – **T**

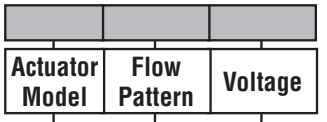

Actuator Model	Flow Pattern	Voltage	Options
71 72 73 71R 72R 73R	**Blank** 2-Way **X** 3-Way	**Blank** 115 VAC **A** 230 VAC **B** 24 VAC **C** 12 VDC **D** 24 VDC	**T** Heater and Thermostat **S#** Additional Limit Switch; # = number of limit switches required
81 82 83		**Blank** 115 VAC **A** 230 VAC	

NOTE: Mounting bracket kits are required when ordering actuators for field assembly.

Example 2, below, describes a Model 91, two-way electric actuator unit with universal power supply.

Example 2: **91UP**

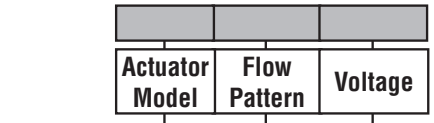

Actuator Model	Torque in-lb (Nm)	Flow Pattern	Voltage
91	150 (17.0)	**Blank** 2-Way	**UP** Universal Power Supply
92	300 (34.0)	**X** 3-Way	
93	600 (67.8)		

NOTE: Mounting bracket kits are required when ordering actuators for field assembly.

Elec Act

Parker Hannifin Corporation
Instrumentation Products Division
Jacksonville, AL USA
http://www.parker.com/ipd

How to Order (Continued)

Electric Actuators for Factory Assembly

The correct part number is easily derived from the following example and ordering chart. The five product characteristics required are coded as shown in the chart.

The example below describes a Model 81, three-way electric actuator unit with a NEMA 4, 4X, 7 and 9 rating, a 230 VAC motor and no options, mounted on a MB Series ball valve.

Example: 4Z-MB6XPFA-SS – 81XA

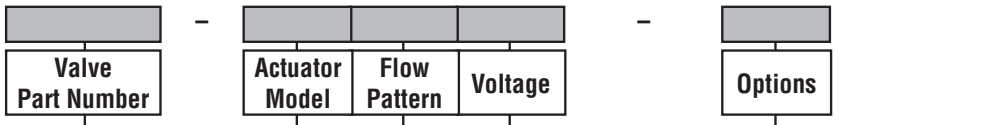

Valve Part Number	Actuator Model	Flow Pattern	Voltage	Options
See the "How to Order" section in the applicable valve series	**71** **72** **73** **71R** **72R** **73R**	**Blank** 2-Way **X** 3-Way	**Blank** 115 VAC **A** 230 VAC **B** 24 VAC **C** 12 VDC **D** 24 VDC	**T** Heater and Thermostat **S#** Additional Limit Switch; # = number of limit switches required
	81 **82** **83**		**Blank** 115 VAC **A** 230 VAC	

NOTE: Parker electrically actuated, B Series Ball Valves should be ordered with elastometric stem packing and seals or the optional live-loaded PTFE packing. This reduces the need for any further packing adjustment after receipt from the factory.

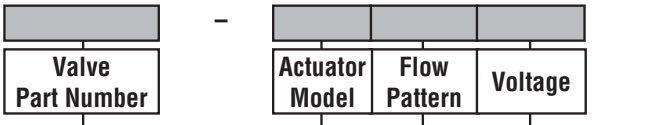

Valve Part Number	Actuator Model	Torque in-lb (Nm)	Flow Pattern	Voltage
See the "How to Order" section in the applicable valve series	**91** **92** **93**	150 (17.0) 300 (34.0) 600 (67.8)	**Blank** 2-Way **X** 3-Way	**UP** Universal Power Supply

NOTE: Mounting bracket kits are required when ordering actuators for field assembly.

Elec Act

Parker Hannifin Corporation
Instrumentation Products Division
Jacksonville, AL USA
http://www.parker.com/ipd

Tel: +45 63 12 83 00 | Email: ps@hymatik.com | www.hymatik.com | Hvidkaervej 27a, DK-5250 Odense SV, Denmark

MAB Series Valves (Replaces MPB Series Ball Valves)

Parker MAB series manual, pneumatic and electrically actuated two-way and three-way ball valves are designed for quarter and half-turn media shutoff or switching applications up to 15,000 psi. Our single-piece trunnion style ball design and re-torqueable seats make the MAB series ideal for severe service applications. The end connector design enables a variety of end connections and combinations for specific customer applications. Please see Parker Autoclave Engineers Ball Valve Literature for additional connection options.

2 Way Ball Valve

Orifice Size	Part Number	MAWP PSI	Connection	Inches			Repair Kits
				Minimum Valve Orifice	Cv	Overall Length	
1/4"	4MP7-MAB4LPK-V-SSP	15,000	1/4" MPI	0.125	0.25	4.19	R2B4S
	6MP7-MAB4LPK-V-SSP	15,000	3/8" MPI	0.250	1.51	4.19	
	8MP7-MAB4LPK-V-SSP	15,000	1/2" MPI	0.250	1.51	5.34	
	9MP7-MAB4LPK-V-SSP	15,000	9/16" MPI	0.250	1.51	5.34	
3/8"	8MP7-MAB6LPK-V-SSP	15,000	1/2" MPI	0.312	3.24	6.27	R2B6S
	9MP7-MAB6LPK-V-SSP	15,000	9/16" MPI	0.375	5.20	6.27	
1/2"	12MP7-MAB8LPK-V-SSP	15,000	3/4" MPI	0.500	10.20	10.85	R2B8S
	16MP7-MAB8LPK-V-SSP	12,500	1" MPI	0.500	10.20	10.85	
3/4"	12MP7-MAB12LPK-V-SSP	15,000	3/4" MPI	0.531	11.80	9.18	R2B12S
	16MP7-MAB12LPK-V-SSP	12,500	1" MPI	0.688	21.00	9.18	

For 2507 Super Duplex option, replace **-SS** with **-2507** and use **-XF** ferrule sets for sizes 12 and 16 and increase MAWP to 15,000 psi. Standard Repair Kits include Viton (Fluorocarbon rubber) orings - use MAB option codes for different material requirements. Dimensions in inches are for reference only, subject to change.
Note: Ball Valves are not recommended for critical gas applications such as Hydrogen, Helium, or other small molecular gases. Consult Factory for assistance.

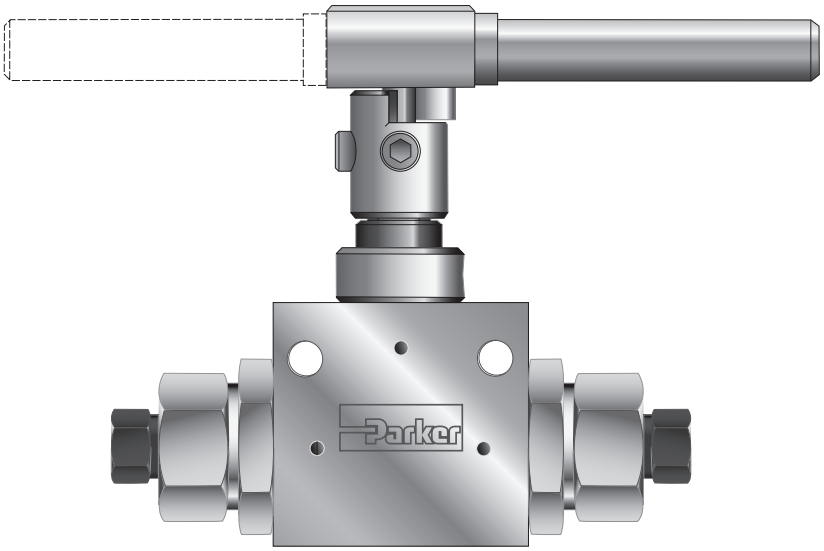

Dimensions

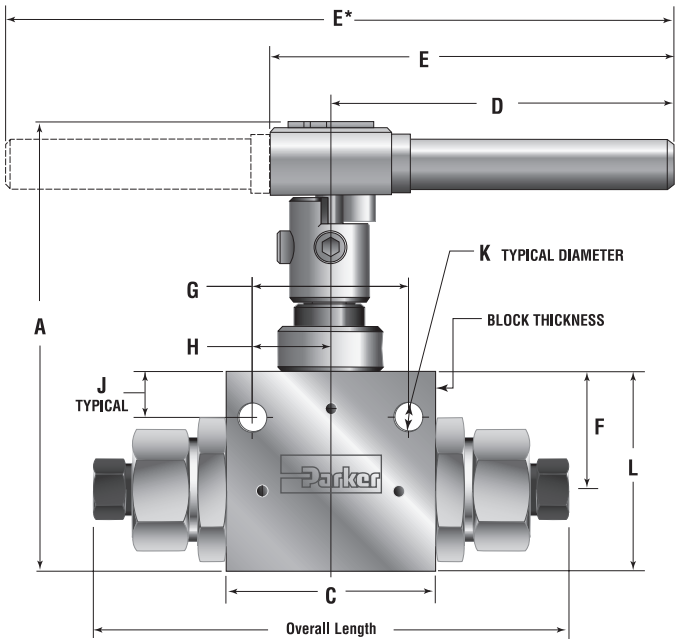

	Inches (mm)										
Orifice Size	A	C	D	E	F	G	H	J	K	L	Block Th'k
1/4"	4.33 (109.99)	2.00 (50.80)	3.37 (85.55)	3.83 (97.28)	1.13 (28.58)	1.50 (38.10)	0.75 (19.05)	0.44 (11.18)	0.28 (7.11)	1.91 (48.41)	1.00 (25.40)
3/8"	4.99 (126.75)	3.00 (76.20)	4.99 (126.75)	5.45 (138.43)	1.38 (34.92)	2.00 (50.80)	1.00 (25.40)	0.41 (10.31)	0.28 (7.11)	2.50 (63.50)	1.38 (34.92)
1/2"	6.43 (163.32)	4.13 (104.78)	5.12 (130.05)	10.24* (260.10)	1.76 (44.70)	3.00 (76.20)	1.50 (38.10)	0.50 (12.70)	0.28 (7.11)	3.55 (90.17)	1.75 (44.45)
3/4"	10.13 (257.30)	4.50 (114.30)	11.00 (279.40)	22.00* (558.80)	2.47 (62.70)	3.25 (82.60)	1.63 (41.40)	0.69 (17.50)	0.41 (10.40)	4.50 (114.30)	3.00 (76.20)

Dimensions in inches are for reference only, subject to change.

MAB

Panel Hole Size

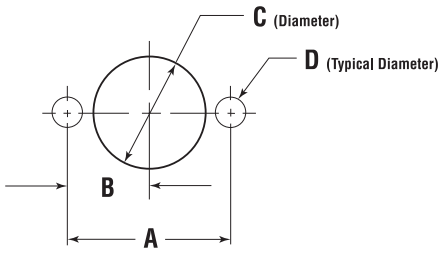

Orifice Size	Inches (mm)				Body Mounting
	A	B	C	D	
1/4"	1.50 (38.10)	0.75 (19.05)	1.06 (26.92)	0.28 (7.11)	1/4" - 20 Thread
3/8"	2.00 (50.80)	1.00 (25.40)	1.50 (38.10)	0.28 (7.11)	
1/2"	3.00 (76.20)	1.50 (38.10)	1.88 (47.63)	0.28 (7.11)	
3/4"	3.25 (82.60)	1.63 (41.40)	2.38 (60.30)	0.41 (10.40)	3/8" - 16 Thread

Dimensions in inches are for reference only, subject to change.

Parker Hannifin Corporation
Instrumentation Products Division
Jacksonville, AL USA
http://www.parker.com/ipd

Tel: +45 63 12 83 00 | Email: ps@hymatik.com | www.hymatik.com | Hvidkaervej 27a, DK-5250 Odense SV, Denmark

MAB Series Ball Valves

3 Way Ball Valve

Orifice Size	Part Number 3 Way 90º Diverter	Part Number 3 Way 180º Selector	MAWP PSI	Connection	Inches					Repair Kit	
					Minimum Valve Orifice	C_V	Overall Length	A	M	Diverter	Selector
3/16"	4MP7-MAB3XPKD-V-SSP	4MP7-MAB3XPK-V-SSP	15,000	1/4" MPI	0.125	0.33	4.72	5.66	0.97	R3BD3S	R3B3S
	6MP7-MAB3XPKD-V-SSP	6MP7-MAB3XPK-V-SSP	15,000	3/8" MPI	0.188	0.50	4.72	5.66	0.97		
	8MP7-MAB3XPKD-V-SSP	8MP7-MAB3XPK-V-SSP	15,000	1/2" MPI	0.188	0.50	5.84	6.23	1.54		
	9MP7-MAB3XPKD-V-SSP	9MP7-MAB3XPK-V-SSP	15,000	9/16" MPI	0.188	0.50	5.84	6.23	1.54		
3/8"	6MP7-MAB6XPKD-V-SSP	6MP7-MAB6XPK-V-SSP	15,000	3/8" MPI	0.250	1.50	6.28	6.90	1.54	R3BD6S	R3B6S
	8MP7-MAB6XPKD-V-SSP	8MP7-MAB6XPK-V-SSP	15,000	1/2" MPI	0.312	2.00	6.28	6.90	1.54		
	9MP7-MAB6XPKD-V-SSP	9MP7-MAB6XPK-V-SSP	15,000	9/16" MPI	0.328	2.10	6.28	6.90	1.54		
1/2"	12MP7-MAB8XPKD-V-SSP	12MP7-MAB8XPK-V-SSP	10,000	3/4" MPI	0.500	4.40	10.85	8.35	2.22	R3BD8S	R3B8S
	16MP7-MAB8XPKD-V-SSP	16MP7-MAB8XPK-V-SSP	10,000	1" MPI	0.500	4.40	10.85	8.35	2.22		

For 2507 Super Duplex option, replace **-SS** with **-2507** and use **-XF** ferrule sets for sizes 12 and 16.
Standard Repair Kits include Viton (Fluorocarbon rubber) orings - use MAB option codes for different material requirements.
3/16" Side inlet pressure = 15,000 psi max, 3/8" Side inlet pressure = Not Recommended, 1/2" Side inlet pressure = 10,000 psi max
Note: Ball Valves are not recommended for critical gas applications such as Hydrogen, Helium, or other small molecular gases. Consult Factory for assistance.

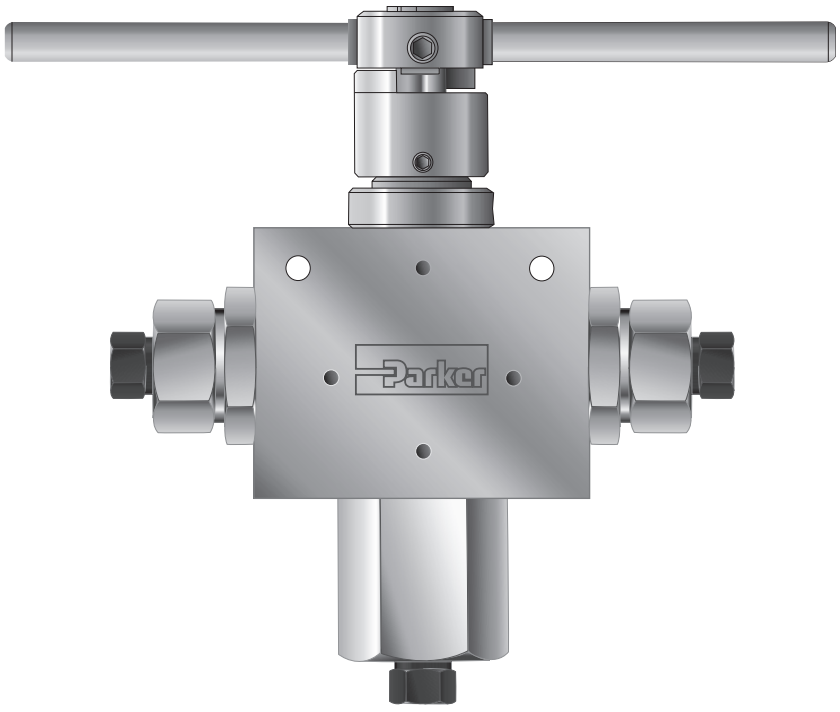

Parker Hannifin Corporation
Instrumentation Products Division
Jacksonville, AL USA
http://www.parker.com/ipd

Dimensions

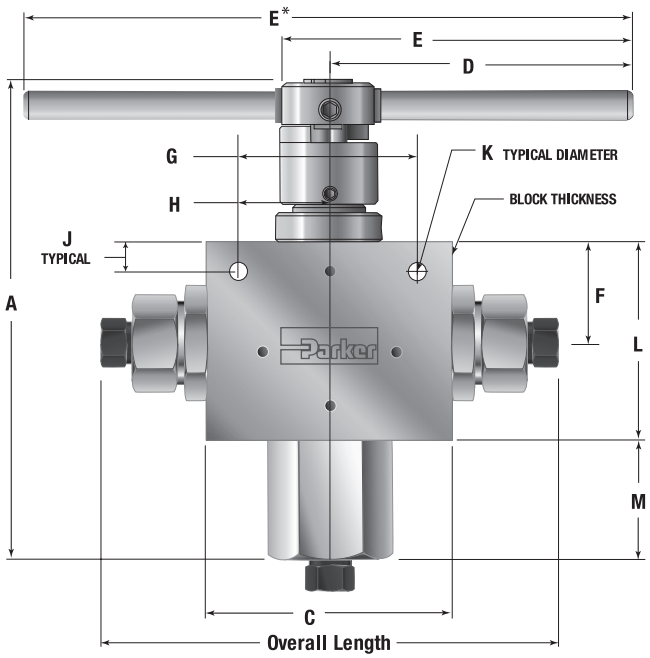

Orifice Size	Inches (mm)									
	C	D	E	F	G	H	J	K	L	Block Th'k
3/16"	2.50 (63.50)	3.37 (85.55)	3.90 (99.02)	1.12 (28.45)	1.50 (38.10)	0.75 (19.05)	0.43 (10.92)	0.28 (7.11)	2.26 (57.40)	1.00 (25.40)
3/8"	3.00 (76.20)	4.99 (126.82)	5.52 (140.32)	1.38 (34.93)	2.00 (50.80)	1.00 (25.40)	0.41 (10.31)	0.28 (7.11)	2.88 (73.03)	1.38 (34.92)
1/2"	4.13 (104.78)	5.09 (129.29)	10.18* (258.57)	1.66 (42.16)	3.00 (76.20)	1.50 (38.10)	0.50 (12.70)	0.28 (7.11)	3.34 (84.94)	1.75 (44.45)

Dimensions in inches are for reference only, subject to change.

MAB

Panel Hole Size

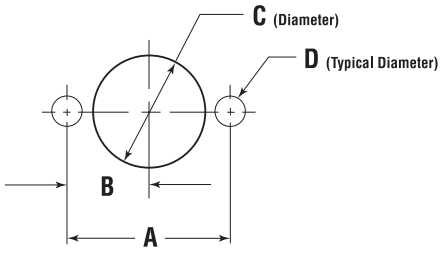

Orifice Size	Inches (mm)				Body Mounting
	A	B	C	D	
3/16"	1.50 (38.10)	0.75 (19.05)	1.06 (26.92)	0.28 (7.11)	1/4" - 20 Thread
3/8"	2.00 (50.80)	1.00 (25.40)	1.50 (38.10)	0.28 (7.11)	
1/2"	3.00 (76.20)	1.50 (38.10)	1.88 (47.63)	0.28 (7.11)	

Dimensions in inches are for reference only, subject to change.

Parker Hannifin Corporation
Instrumentation Products Division
Jacksonville, AL USA
http://www.parker.com/ipd

Tel: +45 63 12 83 00 | Email: ps@hymatik.com | www.hymatik.com | Hvidkaervej 27a, DK-5250 Odense SV, Denmark

MAB Series Ball Valves

Materials of Construction: 2 Way and 3 Way Valves

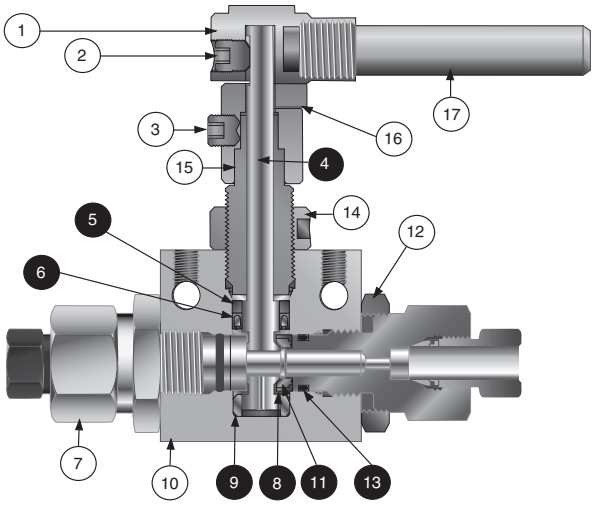

Item#	Description	Material
1	Handle Hub	316 SS
2	Set Screw	Stainless
3	Set Screw	Stainless
❹	One Piece Ball and Stem	316 SS
❺	Thrust Washer	Ampco 45
❻	Spring Energized Seal	Graphite/Carbon PTFE
7	Seat Gland	316 CW SS
❽	Seat Retainer	316 CW SS
❾	Bottom Bearing	PEEK
10	Body	316 SS
⓫	Seat	PEEK
12	Locknut	316 SS
⓭	O-ring	Viton
14	Locking Piece	316 SS
15	Packing Gland	316 CW SS
16	Stopping Device	316 SS
17	Handle	304 SS

❶ Typical spare parts found in Repair Kit

MAB

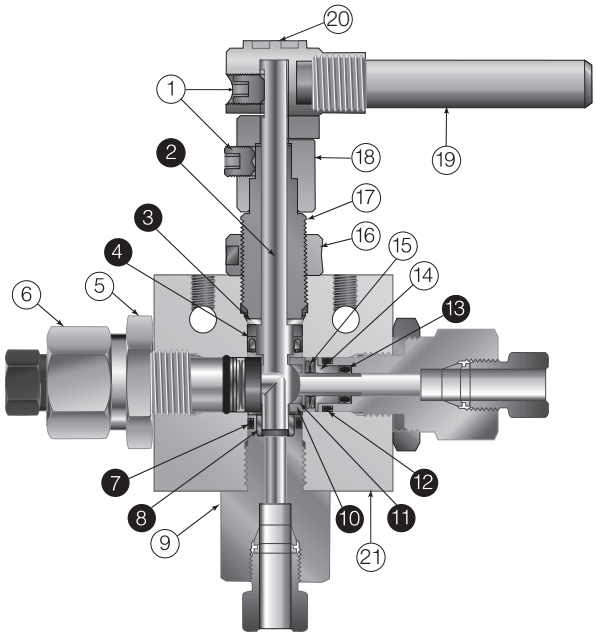

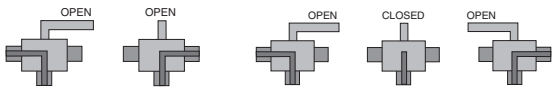

3-Way Diverter Valve
90° Turn

3-Way Ball Valve
180° Turn

Item#	Description	Material
1	Set Screw	Stainless
❷	One Piece Ball and Stem	316 SS
❸	Thrust Washer	Ampco 45
❹	Spring Energized Seal	Graphite/Carbon PTFE
5	Locknut	316 SS
6	Seat Gland	316 CW SS
❼	O-ring	Fluorocarbon Rubber
❽	Bearing	AMPCO 45
9	Bottom Gland	316 CW SS
❿	Seat Retainer	316 CW SS
⓫	Carbon Filled Peek Seats	Arlon 1260
⓬	O-ring	Fluorocarbon Rubber
⓭	O-ring	Fluorocarbon Rubber
14	Belleville Backup	316 CW SS
15	Belleville Washers	302 SS
16	Locking Piece	316 SS
17	Packing Gland	316 CW SS
18	Stopping Device	316 SS
19	Stainless Steel Handle	304 SS
20	Handle Hub	316 SS
21	Body	316 CW SS

❶ Typical spare parts found in Repair Kit

Parker Hannifin Corporation
Instrumentation Products Division
Jacksonville, AL USA
http://www.parker.com/ipd

How to Order 2-Way and 3-Way MAB Series Ball Valves

When ordering Parker MPI™ Ball valves, consider first the bore size to verify that it is large enough for the flow rate needed, then choose the end connection. We have flow and pressure options not found anywhere else. The correct part number is easily derived from the following example and ordering chart. The ten product characteristics required are coded as shown in the chart.

The following example describes an MAB Series, three-way diverter ball valve with a .375" orifice, fluorocarbon rubber seals, 1/4" MPI™ medium pressure inverted connections on all ports, stainless steel body and the optional lock out device.

Typical part number example: **4MP7-MAB6XPKD-V-SSP-LD** (part number is created based on customer selection of product parameters, see below for example)

4	MP7	-	MAB	6	X	PK	D	-	V	-	SSP	-	LD
Inlet/Outlet Connection Size	Connection Type		Valve Series	Orifice Size	Valve Type	Seat Material	3 Way Valve Type		Seat Gland Seal Material		Body Material		Options
4 = 1/4" **6** = 3/8**"** **8** = 1/2" **9** = 9/16" **12** = 3/4**"** **16** = 1"	**MP7=** Parker MPI™		**MAB**	**3** = 3/16"[2] **4** = 1/4"[1] **6** = 3/8" **8** = 1/2" **12** = 3/4"[1]	**L=** 2 Way **X=** 3 Way	**PK=** PEEK	**Blank=** Selector **D=** Diverter		**V***=** Fluorocarbon Rubber **KZ**=** FFKM Highly Fluorinated Fluorocarbon Rubber **BN=** Nitrile Rubber **EPR=** Ethylene Propylene Rubber **C**=** PTFE U-Cup		**SSP=** Stainless Steel **2507=** Super Duplex		**LD=** Lock Out Device **XF=** High Strength Ferrules for 2507 SD sizes 12 & 16 only **Actuator Options** (see pages 61-69)
									** Limited size availability - see O-ring options below *** Standard o-ring material				

[1] Only Available with 2-Way Valves

[2] Only Available with 3-Way Valves

Note: Critical gas applications such as hydrogen or helium are not recommended. Consult factory with application details for assistance.

MAB

Options

Standard valve has Fluorocarbon Rubber o-rings [0 ºF (-18 ºC) to 400 ºF (204 ºC) maximum].

KZ - Standard valve with FFKM Highly Fluorinated Fluorocarbon Rubber o-rings [30°F to 500°F (0° to 260°C).
NOTE: Not available with 3/4" orifice 2-way valves

C - Standard valve with PTFE U-Cup Seal [0° to 500°F (-18° to 260°C)].
NOTE: Only available with 3/4" orifice 2-way valves

BN - Standard valve with Buna-N (Nitrile) Rubber o-rings [-20° to 250°F (-29° to 121°C)].

EPR - Standard valve with Ethylene Propylene Rubber o-rings [-20° to 250°F (-29° to 121°C).

LD - Standard valve with factory-installed lock out device.

Parker Hannifin Corporation
Instrumentation Products Division
Jacksonville, AL USA
http://www.parker.com/ipd

Tel: +45 63 12 83 00 | Email: ps@hymatik.com | www.hymatik.com | Hvidkaervej 27a, DK-5250 Odense SV, Denmark

Ball Valves: MAB Series Actuators (Pneumatic)

Air to Open/Spring to Close - Pneumatic Operated Ball Valves

Add the suffix **-FC**, or **-FO** to the appropriate valve catalog number for a complete valve assembly.

VALVE SERIES	Dimensions Data - inches (mm)										No Load Time OPEN/CLOSE Seconds/90°	Minimum Required Air Pressure
	A	B	C	D	E	F	G	H	I	J		
MAB4L-FC/FO	6.85 (173.99)	3.20 (81.28)	2.50 (63.50)	1.25 (31.75)	1.00 (25.40)	0.50 (12.70)	0.28 (7.11)	1.30 (33.02)	2.50 (63.50)	1.88 (47.75)	0.5	80 psi (5.51 bar)
MAB6L-FC/FO	7.28 (184.91)	3.86 (98.04)	3.00 (76.20)	1.50 (38.10)	1.50 (38.10)	0.75 (19.05)	0.34 (8.64)	1.59 (40.39)	3.00 (76.20)	2.10 (53.34)	1.0	80 psi (5.51 bar)
MAB8L-FC/FO	9.38 (238.25)	4.62 (117.35)	3.00 (76.20)	1.50 (38.10)	2.00 (50.80)	1.00 (25.40)	0.53 (13.46)	2.00 (50.80)	3.00 (76.20)	2.48 (62.99)	1.5	80 psi (5.51 bar)
MAB12L-FC/FO	17.30 (439.42)	8.00 (203.20)	5.00 (127.00)	2.50 (63.50)	3.25 (82.55)	1.63 (41.40)	0.53 (13.46)	3.54 (89.92)	5.00 (127.00)	3.57 (90.68)	3.0	80 psi (5.51 bar)
MAB3XD-FC/FO	6.85 (173.99)	3.20 (81.28)	2.50 (63.50)	1.25 (31.75)	1.00 (25.40)	0.50 (12.70)	0.28 (7.11)	1.30 (33.02)	2.50 (63.50)	1.88 (47.75)	0.5	80 psi (5.51 bar)
MAB6XD-FC/FO	7.28 (184.91)	3.86 (98.04)	3.00 (76.20)	1.50 (38.10)	1.50 (38.10)	0.75 (19.05)	0.34 (8.64)	1.59 (40.39)	3.00 (76.20)	2.10 (53.34)	1.0	80 psi (5.51 bar)
MAB8XD-FC/FO	9.38 (238.25)	4.62 (117.35)	3.00 (76.20)	1.50 (38.10)	2.00 (50.80)	1.00 (25.40)	0.53 (13.46)	2.00 (50.80)	3.00 (76.20)	2.48 (62.99)	1.5	80 psi (5.51 bar)

NOTE:

- Maximum allowable air pressure is 150 psi (10.34 bar)
- 1/4" NPT female air connection
- FC: Air to open/spring to close
- FO: Air to close/spring to open
- Actuators operating temperature: -10°F to 176°F (-23°C to 80°C)
- High temperature actuator option available, consult factory
- Stainless steel housing actuator models available, consult factory
- Actuators available with limit switches and visual indicators.
- Epoxy coated housing available.
- Solenoids available, direct or nipple mount.
- Corrosion resistant anodized aluminum housing.

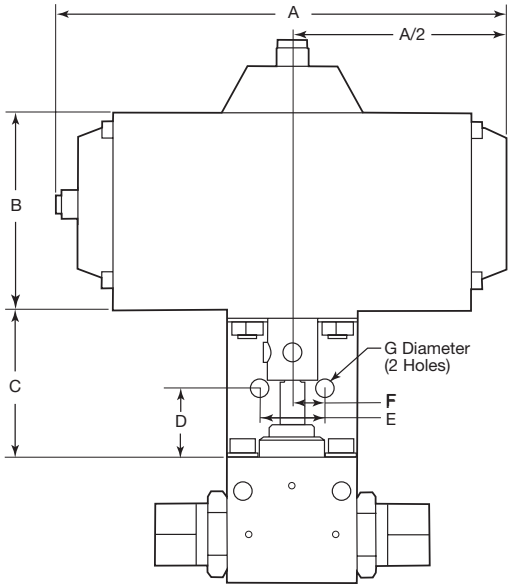

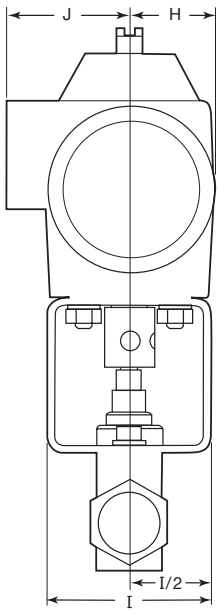

MAB

Parker Hannifin Corporation
Instrumentation Products Division
Jacksonville, AL USA
http://www.parker.com/ipd

Ball Valves: MAB Series Actuators (Pneumatic)

Air to Open and Close - Pneumatic Operated Ball Valves

Add the suffix **-AD** to the appropriate valve catalog number for a complete valve assembly.

VALVE SERIES	Dimensions Data - inches (mm)										No Load Time OPEN/CLOSE Seconds/90°	Minimum Required Air Pressure
	A	B	C	D	E	F	G	H	I	J		
MAB4L-AD	6.85 (173.99)	3.20 (81.28)	2.50 (63.50)	1.25 (31.75)	1.00 (25.40)	0.50 (12.70)	0.28 (7.11)	1.30 (33.02)	2.50 (63.50)	1.88 (47.75)	0.5	80 psi (5.51 bar)
MAB6L-AD	6.85 (173.99)	3.20 (81.28)	3.00 (76.20)	1.50 (38.10)	1.50 (38.10)	0.75 (19.05)	0.34 (8.64)	1.30 (33.02)	3.00 (76.20)	1.88 (47.75)	0.5	80 psi (5.51 bar)
MAB8L-AD	7.28 (184.91)	3.86 (98.04)	3.00 (76.20)	1.50 (38.10)	2.00 (50.80)	1.00 (25.40)	0.53 (13.46)	1.59 (40.39)	3.00 (76.20)	2.10 (53.34)	1.0	80 psi (5.51 bar)
MAB12L-AD	11.82 (300.23)	6.10 (154.94)	5.00 (127.00)	2.50 (63.50)	3.25 (82.55)	1.63 (41.40)	0.53 (13.46)	2.55 (64.77)	5.00 (127.00)	2.55 (64.77)	2.5	80 psi (5.51 bar)
MAB3X-AD	9.50 (241.30)	3.59 (91.19)	2.50 (63.50)	1.25 (31.75)	1.00 (25.40)	0.50 (12.70)	0.28 (7.11)	1.37 (34.80)	2.50 (63.50)	1.99 (50.55)	-	80 psi (5.51 bar)
MAB6X-AD	9.50 (241.30)	3.59 (91.19)	3.00 (76.20)	1.50 (38.10)	1.50 (38.10)	0.75 (19.05)	0.34 (8.64)	1.37 (34.80)	3.00 (76.20)	1.99 (50.55)	-	80 psi (5.51 bar)
MAB8X-AD	10.21 (259.33)	4.47 (113.54)	3.00 (76.20)	1.50 (38.10)	2.00 (50.80)	1.00 (25.40)	0.53 (13.46)	1.67 (42.42)	3.00 (76.20)	2.10 (53.34)	-	80 psi (5.51 bar)
MAB3XD-AD	6.85 (173.99)	3.20 (81.28)	2.50 (63.50)	1.25 (31.75)	1.00 (25.40)	0.50 (12.70)	0.28 (7.11)	1.30 (33.02)	2.50 (63.50)	1.88 (47.75)	0.5	80 psi (5.51 bar)
MAB6XD-AD	6.85 (173.99)	3.20 (81.28)	3.00 (76.20)	1.50 (38.10)	1.50 (38.10)	0.75 (19.05)	0.34 (8.64)	1.30 (33.02)	3.00 (76.20)	1.88 (47.75)	0.5	80 psi (5.51 bar)
MAB8XD-AD	7.28 (184.91)	3.86 (98.04)	3.00 (76.20)	1.50 (38.10)	2.00 (50.80)	1.00 (25.40)	0.53 (13.46)	1.59 (40.39)	3.00 (76.20)	2.10 (53.34)	1.0	80 psi (5.51 bar)

NOTE:

- Maximum allowable air pressure is 150 psi (10.34 bar)
- 1/4" NPT female air connection
- AD: Air to open/Air to close (double acting)
- Actuators available with limit switches and visual indicators.
- Actuators operating temperature: -10°F to 176°F (-23°C to 80°C)
- High temperature actuator option available, consult factory
- Stainless steel housing actuator models available, consult factory
- Epoxy coated housing available.
- Solenoids available, direct or nipple mount.
- Corrosion resistant anodized aluminum housing.

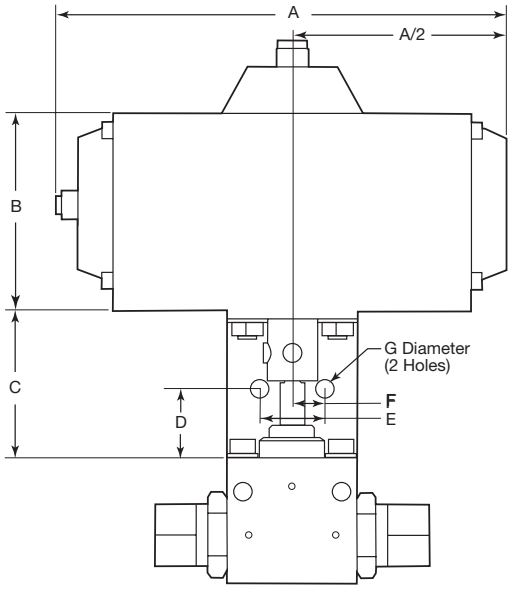

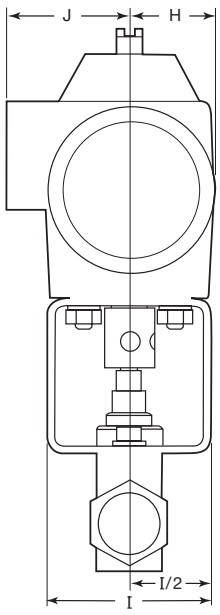

MAB

Parker Hannifin Corporation
Instrumentation Products Division
Jacksonville, AL USA
http://www.parker.com/ipd

Tel: +45 63 12 83 00 | Email: ps@hymatik.com | www.hymatik.com | Hvidkaervej 27a, DK-5250 Odense SV, Denmark

Ball Valves: MAB Series Actuators (Electric)

3/16" to 3/8" - Electric Operated Ball Valves, Weather Proof NEMA 4x

Add the suffix **-E01**, **-E02** or **-E03** to the appropriate valve catalog number for a complete valve assembly.

VALVE SERIES	Dimensions Data - inches (mm)						No Load Time OPEN/CLOSE Seconds/90°	VOLTAGE
	A	B	C	D	E	F		
MAB4L-E01	2.50 (63.50)	1.25 (31.75)	1.00 (25.4)	0.50 (12.70)	0.28 (7.11)	2.50 (63.50)	3	120 VAC
MAB4L-E02							3	240 VAC
MAB4L-E03							3	24 VDC
MAB6L-E01	3.00 (76.2)	1.50 (38.1)	1.50 (38.1)	0.75 (19.05)	0.34 (8.64)	3.00 (76.2)	7	120 VAC
MAB6L-E02							7	240 VAC
MAB6L-E03							5	24 VDC
MAB3X-E01	2.50 (63.50)	1.25 (31.75)	1.00 (25.4)	0.50 (12.70)	0.28 (7.11)	2.50 (63.50)	3	120 VAC
MAB3X-E02							3	240 VAC
MAB6X-E01	3.00 (76.2)	1.50 (38.1)	1.50 (38.1)	0.75 (19.05)	0.34 (8.64)	3.00 (76.2)	7	120 VAC
MAB6X-E02							7	240 VAC
MAB3XD-E01	2.50 (63.50)	1.25 (31.75)	1.00 (25.4)	0.50 (12.70)	0.28 (7.11)	2.50 (63.50)	3	120 VAC
MAB3XD-E02							3	240 VAC
MAB3XD-E03							3	24 VDC
MAB6XD-E01	3.00 (76.2)	1.50 (38.1)	1.50 (38.1)	0.75 (19.05)	0.34 (8.64)	3.00 (76.2)	7	120 VAC
MAB6XD-E02							7	240 VAC
MAB6XD-E03							5	24 VDC

NOTE:
- E01:Electric 120 VAC
- E02:Electric 240 VAC
- E03:Electric 24 VDC
- Actuator operating temperature: 0ºF to 160ºF (-18ºC to 71ºC)
- Powder coated aluminum housing
- CE & CSA approved for NEMA 4 and 4x
- Manual override
- 1/2" NPT female conduit connection
- For other options consult factory

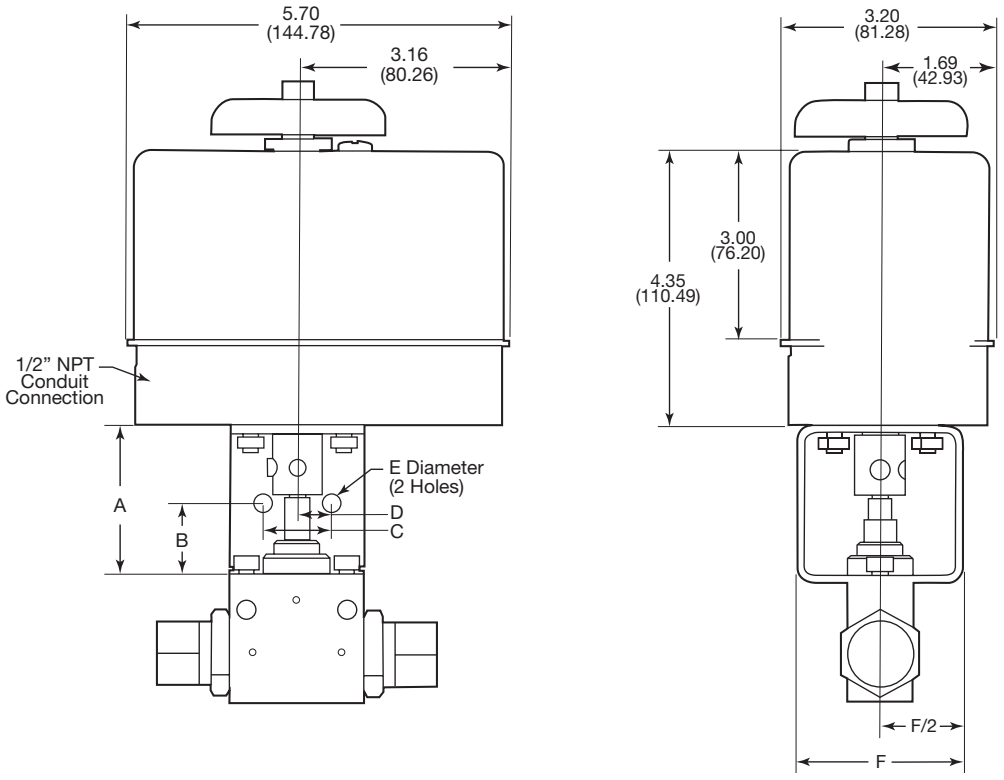

MAB

Parker Hannifin Corporation
Instrumentation Products Division
Jacksonville, AL USA
http://www.parker.com/ipd

Ball Valves: MAB Series Actuators (Electric)

1/2" - Electric Operated Ball Valves, Weather Proof NEMA 4x

Add the suffix **-E01**, **-E02** or **-E03** to the appropriate valve catalog number for a complete valve assembly.

VALVE SERIES	Dimensions Data - inches (mm)						No Load Time OPEN/CLOSE Seconds/90°	VOLTAGE
	A	B	C	D	E	F		
MAB8L-E01	3.00 (76.2)	1.50 (38.1)	2.00 (50.8)	1.00 (25.40)	0.53 (13.46)	3.00 (76.2)	5	120 VAC
MAB8L-E02							5	240 VAC
MAB8L-E03							5	24 VDC
MAB8X-E01	3.00 (76.2)	1.50 (38.1)	2.00 (50.80)	1.00 (25.40)	0.53 (13.46)	3.00 (76.2)	5	120 VAC
MAB8X-E02							5	240 VAC
MAB8XD-E01	3.00 (76.2)	1.50 (38.1)	2.00 (50.80)	1.00 (25.40)	0.53 (13.46)	3.00 (76.2)	5	120 VAC
MAB8XD-E02							5	240 VAC
MAB8XD-E03							5	24 VDC

NOTE:
- E01:Electric 120 VAC
- E02:Electric 240 VAC
- E03:Electric 24 VDC
- Actuator operating temperature: 0ºF to 160ºF (-18ºC to 71ºC)
- Powder coated aluminum housing
- CE & CSA approved for NEMA 4 and 4x
- Manual override
- 1/2" NPT female conduit connection
- For other options consult factory

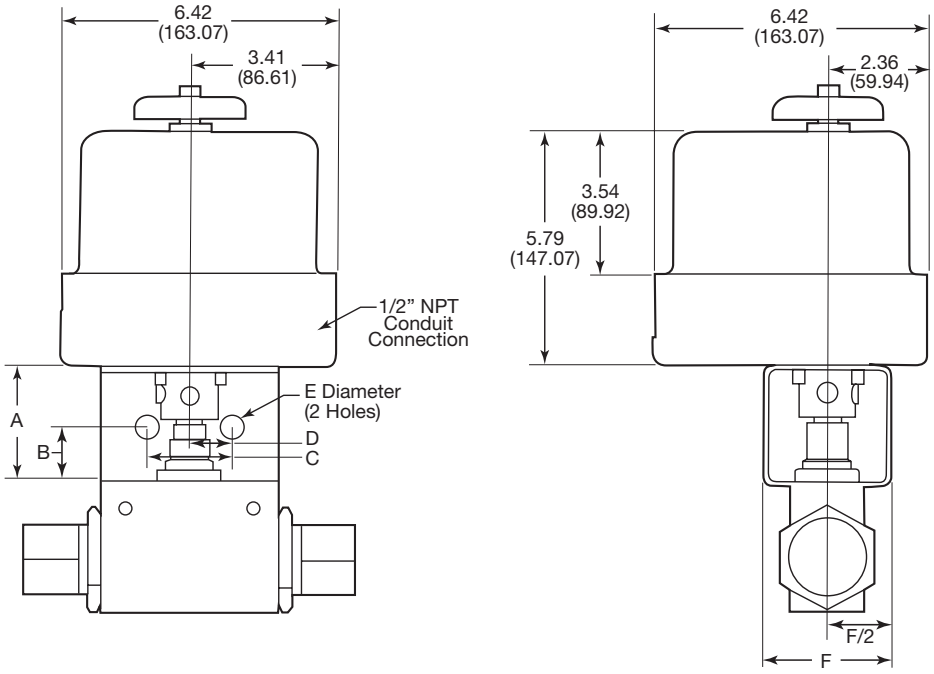

MAB

Parker Hannifin Corporation
Instrumentation Products Division
Jacksonville, AL USA
http://www.parker.com/ipd

Ball Valves: MAB Series Actuators (Electric)

3/4" - Electric Operated Ball Valves, Weather Proof NEMA 4x

Add the suffix **-E01** or **-E02** to the appropriate valve catalog number for a complete valve assembly.

VALVE SERIES	Dimensions Data - inches (mm)						No Load Time OPEN/CLOSE Seconds/90°	VOLTAGE
	A	B	C	D	E	F		
MAB12L-E01	5.00 (127.00)	2.50 (63.50)	3.25 (82.55)	1.63 (41.40)	0.53 (13.46)	5.00 (127.00)	10	120 VAC
MAB12L-E02							10	240 VAC

NOTE:
- E01:Electric 120 VAC
- E02:Electric 240 VAC
- E03:Electric 24 VDC
- Actuator operating temperature: 0ºF to 160ºF (-18ºC to 71ºC)
- Powder coated aluminum housing
- CE & CSA approved for NEMA 4 and 4x
- Manual override
- 1/2" NPT female conduit connection
- For other options consult factory

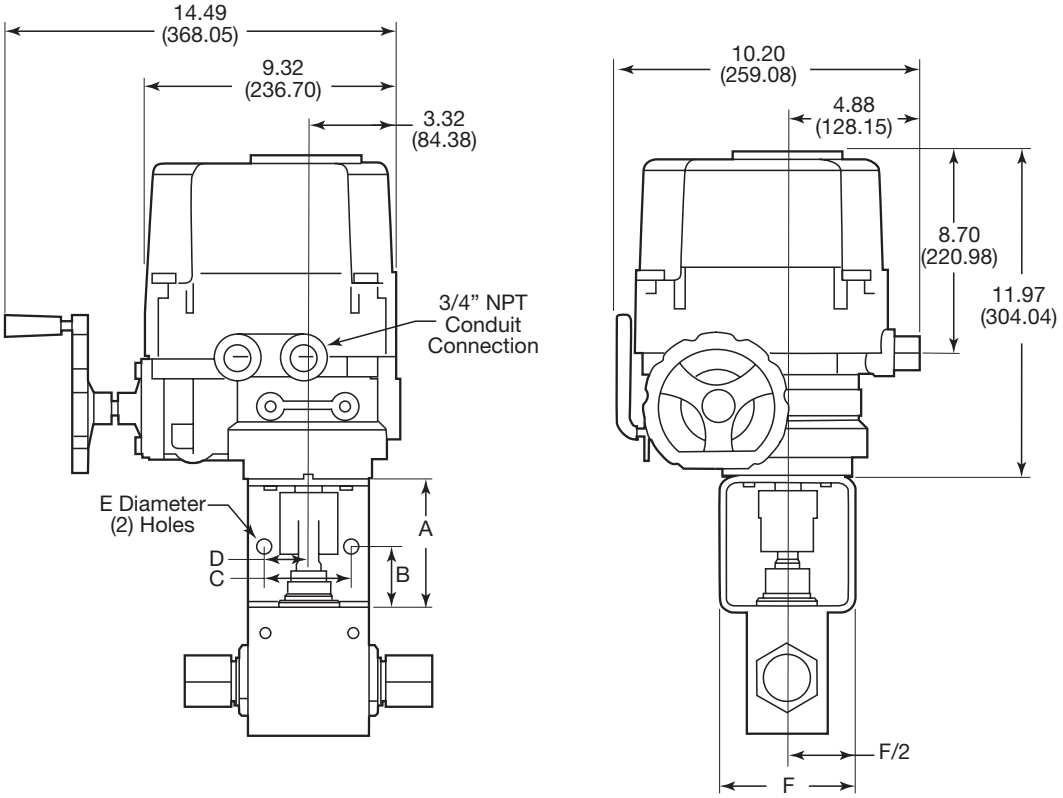

MAB

Parker Hannifin Corporation
Instrumentation Products Division
Jacksonville, AL USA
http://www.parker.com/ipd

Ball Valves: MAB Series Actuators (Electric)

3/16" to 3/8" - Electric Explosion Proof Operated Ball Valves

Add the suffix **-E01X**, **-E02X** or **-E03X** to the appropriate valve catalog number for a complete valve assembly.

VALVE SERIES	Dimensions Data - inches (mm)						No Load Time OPEN/CLOSE Seconds/90°	VOLTAGE
	A	B	C	D	E	F		
MAB4L-E01X	3.00 (76.2)	1.50 (38.1)	1.00 (25.40)	0.50 (12.70)	0.28 (7.11)	3.00 (76.2)	7	120 VAC
MAB4L-E02X							7	240 VAC
MAB4L-E03X							7	24 VDC
MAB6L-E01X	3.00 (76.2)	1.50 (38.1)	1.50 (38.1)	0.75 (19.05)	0.34 (8.64)	3.00 (76.2)	7	120 VAC
MAB6L-E02X							7	240 VAC
MAB6L-E03X							7	24 VDC
MAB3XD-E01X	3.00 (76.2)	1.50 (38.1)	1.00 (25.40)	0.50 (12.70)	0.28 (7.11)	3.00 (76.2)	7	120 VAC
MAB3XD-E02X							7	240 VAC
MAB3XD-E03X							7	24 VDC
MAB6XD-E01X	3.00 (76.2)	1.50 (38.1)	1.50 (38.1)	0.75 (19.05)	0.34 (8.64)	3.00 (76.2)	7	120 VAC
MAB6XD-E02X							7	240 VAC
MAB6XD-E03X							7	24 VDC

NOTE:
- E01X:Electric 120 VAC
- E02X:Electric 240 VAC
- E03X:Electric 24 VDC
- Actuator operating temperature: -4ºF to 158ºF (-20ºC to 70ºC)
- Powder coated aluminum housing
- CE & CSA approved
- Manual override
- 3/4" NPT female conduit connection
- Explosion proof enclosure II 2 G, EEx-d IIB T4, IP67, ATEX Approved
- Designed to comply with NEMA 7 Explosion Proof
- Watertight enclosure (IP68 10M 72HR)
- For other options consult factory

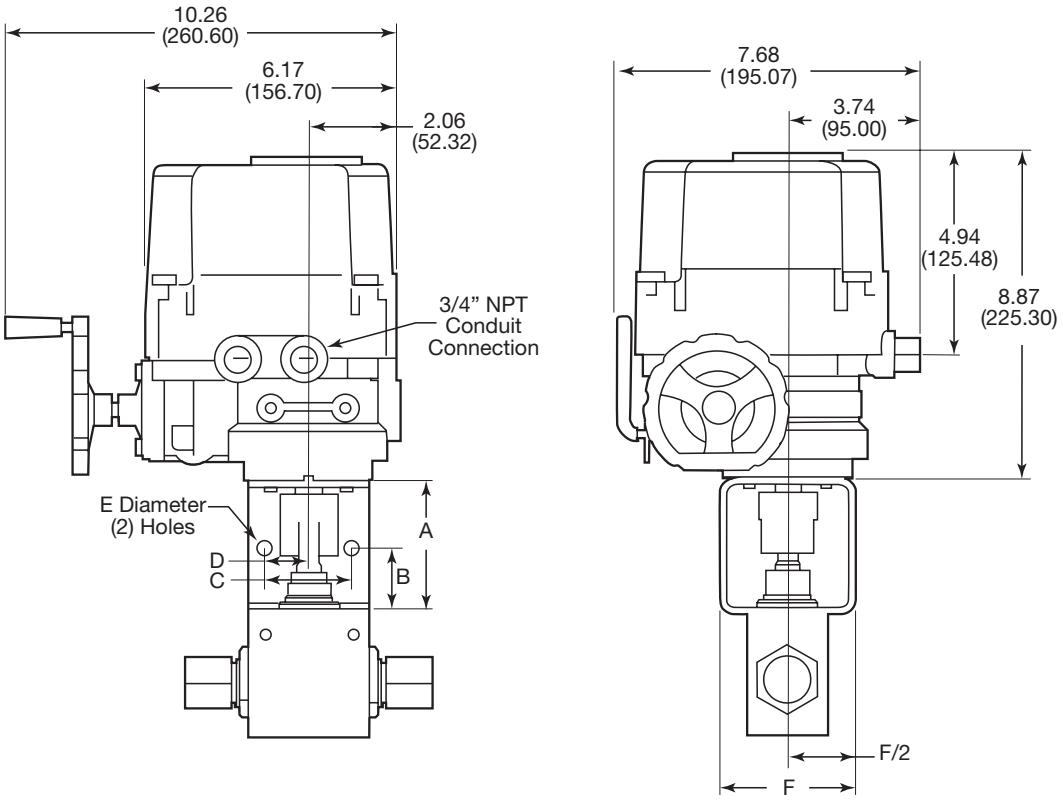

MAB

Parker Hannifin Corporation
Instrumentation Products Division
Jacksonville, AL USA
http://www.parker.com/ipd

Tel: +45 63 12 83 00 | Email: ps@hymatik.com | www.hymatik.com | Hvidkaervej 27a, DK-5250 Odense SV, Denmark

Ball Valves: MAB Series Actuators (Electric)

1/2" - Electric Explosion Proof Operated Ball Valves

Add the suffix **-E01X**, **-E02X** or **-E03X** to the appropriate valve catalog number for a complete valve assembly.

VALVE SERIES	Dimensions Data - inches (mm)						No Load Time OPEN/CLOSE Seconds/90°	VOLTAGE
	A	B	C	D	E	F		
MAB8L-E01X	3.00 (76.2)	1.50 (38.1)	2.00 (50.8)	1.00 (25.40)	0.56 (14.22)	3.00 (76.2)	7	120 VAC
MAB8L-E02X							7	240 VAC
MAB8L-E03X							7	24 VDC
MAB8XD-E01X	3.00 (76.2)	1.50 (38.1)	2.00 (50.80)	1.00 (25.40)	0.56 (14.22)	3.00 (76.2)	7	120 VAC
MAB8XD-E02X							7	240 VAC
MAB8XD-E03X							7	24 VDC

NOTE:
- E01X:Electric 120 VAC
- E02X:Electric 240 VAC
- E03X:Electric 24 VDC
- Actuator operating temperature: -4ºF to 158ºF (-20ºC to 70ºC)
- Powder coated aluminum housing
- CE & CSA approved
- Manual override
- 3/4" NPT female conduit connection
- Explosion proof enclosure II 2 G, EEx-d IIB T4, IP67, ATEX Approved
- Designed to comply with NEMA 7 Explosion Proof
- Watertight enclosure (IP68 10M 72HR)
- For other options consult factory

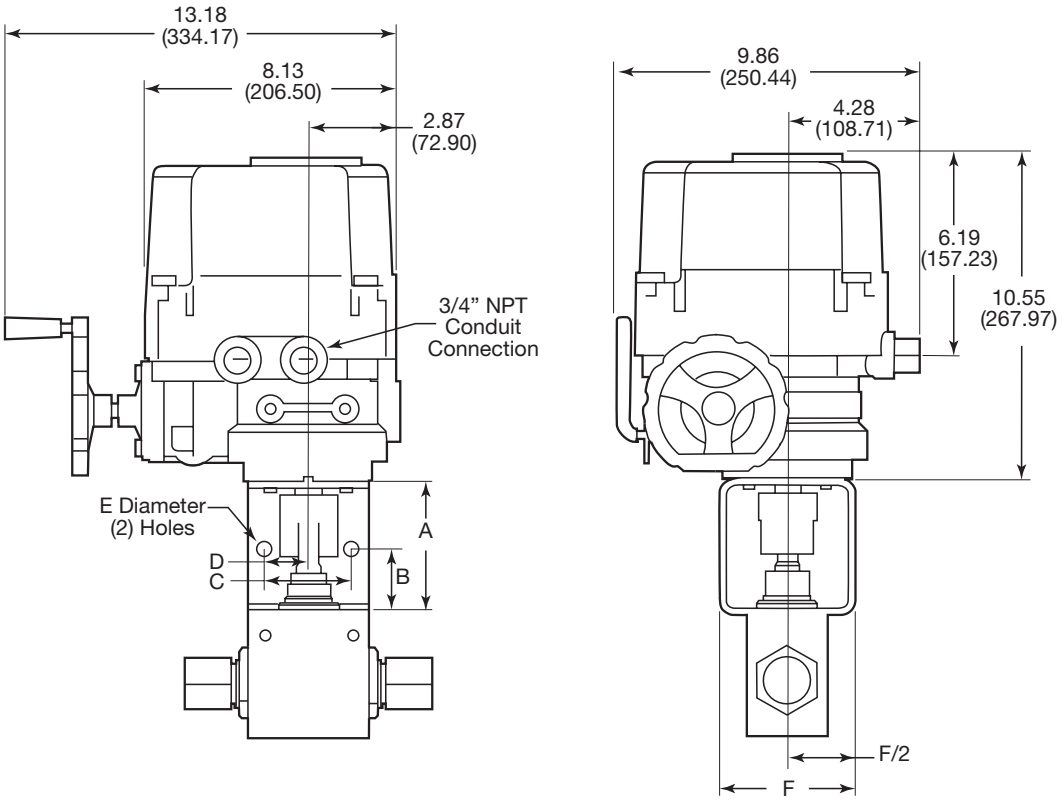

MAB

Parker Hannifin Corporation
Instrumentation Products Division
Jacksonville, AL USA
http://www.parker.com/ipd

Ball Valves: MAB Series Actuators (Electric)

3/4" - Electric Explosion Proof Operated Ball Valves

Add the suffix **-E01X** or **-E02X** to the appropriate valve catalog number for a complete valve assembly.

VALVE SERIES	Dimensions Data - inches (mm)						No Load Time OPEN/CLOSE Seconds/90º	VOLTAGE
	A	B	C	D	E	F		
MAB12L-E01X	5.00 (127.00)	2.50 (63.50)	3.25 (82.55)	1.63 (41.40)	0.53 (13.46)	5.00 (127.00)	8.5	120 VAC
MAB12L-E02X							8.5	240 VAC

NOTE:
- E01X:Electric 120 VAC
- E02X:Electric 240 VAC
- Actuator operating temperature: -4ºF to 158ºF (-20ºC to 70ºC)
- Powder coated aluminum housing
- CE & CSA approved
- Manual override
- 3/4" NPT female conduit connection
- Explosion proof enclosure II 2 G, EEx-d IIB T4, IP67, ATEX Approved
- Designed to comply with NEMA 7 Explosion Proof
- Watertight enclosure (IP68 10M 72HR)
- For other options consult factory

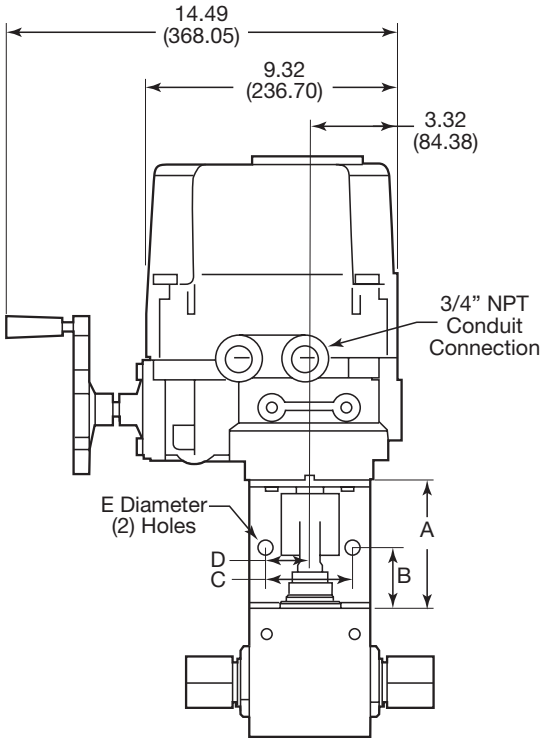

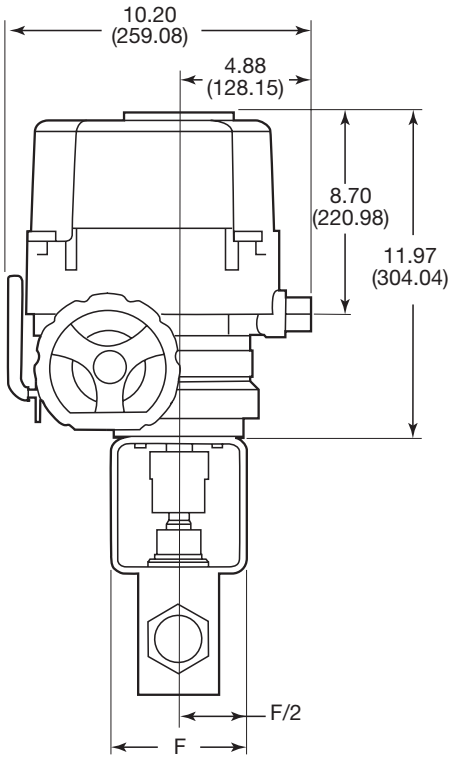

MAB

Parker Hannifin Corporation
Instrumentation Products Division
Jacksonville, AL USA
http://www.parker.com/ipd

Tel: +45 63 12 83 00 | Email: ps@hymatik.com | www.hymatik.com | Hvidkaervej 27a, DK-5250 Odense SV, Denmark

End Connections

Available End Connections

Standard End Connections

A - Two ferrule A-LOK® compression port



Z - Single ferrule CPI™ compression port

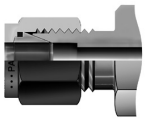

F - ANSI/ASME B1.20.1 internal pipe threads

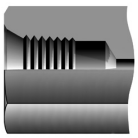

M - ANSI/ASME B1.20.1 external pipe threads



Non-Standard End Connections

Not available on all valve series. Please consult factory for availability.

V - VacuSeal face seal port



MP7 - Parker MPI™ (Medium Pressure Inverted) To 15,000 PSI

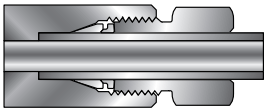

L - SAE J1453, Fitting – O-ring face seal – External thread with O-ring groove designed to seal with an elastomer against a sleeve



F5 - SAE J1926/2, Part 2: Heavy-duty (S Series) stud ends



G5 - SAE J1926/1, Part 1: Threaded port with O-ring seal in truncated housing

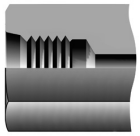

KF - British Standard BS 21 (ISO 7-1), Internal pipe threads



KM - British Standard BS 21 (ISO 7-1), External pipe threads



End Conn

Parker Hannifin Corporation
Instrumentation Products Division
Jacksonville, AL USA
http://www.parker.com/ipd

Offer of Sale

The items described in this document and other documents and descriptions provided by Parker Hannifin Corporation, its subsidiaries and its authorized distributors ("Seller") are hereby offered for sale at prices to be established by Seller. This offer and its acceptance by any customer ("Buyer") shall be governed by all of the following Terms and Conditions. Buyer's order for any item described in its document, when communicated to Seller verbally, or in writing, shall constitute acceptance of this offer. All goods, services or work described will be referred to as "Products".

1. Terms and Conditions. Seller's willingness to offer Products, or accept an order for Products, to or from Buyer is subject to these Terms and Conditions or any newer version of the terms and conditions found on-line at www.parker.com/saleterms/. Seller objects to any contrary or additional terms or conditions of Buyer's order or any other document issued by Buyer.

2. Price Adjustments; Payments. Prices stated on Seller's quote or other documentation offered by Seller are valid for 30 days, and do not include any sales, use, or other taxes unless specifically stated. Unless otherwise specified by Seller, all prices are F.C.A. Seller's facility (INCOTERMS 2010). Payment is subject to credit approval and is due 30 days from the date of invoice or such other term as required by Seller's Credit Department, after which Buyer shall pay interest on any unpaid invoices at the rate of 1.5% per month or the maximum allowable rate under applicable law.

3. Delivery Dates; Title and Risk; Shipment. All delivery dates are approximate and Seller shall not be responsible for any damages resulting from any delay. Regardless of the manner of shipment, title to any products and risk of loss or damage shall pass to Buyer upon placement of the products with the shipment carrier at Seller's facility. Unless otherwise stated, Seller may exercise its judgment in choosing the carrier and means of delivery. No deferment of shipment at Buyers' request beyond the respective dates indicated will be made except on terms that will indemnify, defend and hold Seller harmless against all loss and additional expense. Buyer shall be responsible for any additional shipping charges incurred by Seller due to Buyer's acts or omissions.

4. Warranty. Seller warrants that the Products sold hereunder shall be free from defects in material or workmanship for a period of twelve months from the date of delivery to Buyer or 2,000 hours of normal use, whichever occurs first. The prices charged for Seller's products are based upon the exclusive limited warranty stated above, and upon the following disclaimer: **DISCLAIMER OF WARRANTY: THIS WARRANTY COMPRISES THE SOLE AND ENTIRE WARRANTY PERTAINING TO PRODUCTS PROVIDED HEREUNDER. SELLER DISCLAIMS ALL OTHER WARRANTIES, EXPRESS AND IMPLIED, INCLUDING DESIGN, MERCHANTABILITY AND FITNESS FOR A PARTICULAR PURPOSE.**

5. Claims; Commencement of Actions. Buyer shall promptly inspect all Products upon delivery. No claims for shortages will be allowed unless reported to the Seller within 10 days of delivery. No other claims against Seller will be allowed unless asserted in writing within 30 days after delivery. Buyer shall notify Seller of any alleged breach of warranty within 30 days after the date the defect is or should have been discovered by Buyer. Any action based upon breach of this agreement or upon any other claim arising out of this sale (other than an action by Seller for an amount due on any invoice) must be commenced within 12 months from the date of the breach without regard to the date breach is discovered.

6. LIMITATION OF LIABILITY. UPON NOTIFICATION, SELLER WILL, AT ITS OPTION, REPAIR OR REPLACE A DEFECTIVE PRODUCT, OR REFUND THE PURCHASE PRICE. **IN NO EVENT SHALL SELLER BE LIABLE TO BUYER FOR ANY SPECIAL, INDIRECT, INCIDENTAL OR CONSEQUENTIAL DAMAGES ARISING OUT OF, OR AS THE RESULT OF, THE SALE, DELIVERY, NON-DELIVERY, SERVICING, USE OR LOSS OF USE OF THE PRODUCTS OR ANY PART THEREOF, OR FOR ANY CHARGES OR EXPENSES OF ANY NATURE INCURRED WITHOUT SELLER'S WRITTEN CONSENT, EVEN IF SELLER HAS BEEN NEGLIGENT, WHETHER IN CONTRACT, TORT OR OTHER LEGAL THEORY. IN NO EVENT SHALL SELLER'S LIABILITY UNDER ANY CLAIM MADE BY BUYER EXCEED THE PURCHASE PRICE OF THE PRODUCTS.**

7. User Responsibility. The user, through its own analysis and testing, is solely responsible for making the final selection of the system and Product and assuring that all performance, endurance, maintenance, safety and warning requirements of the application are met. The user must analyze all aspects of the application and follow applicable industry standards and Product information. If Seller provides Product or system options, the user is responsible for determining that such data and specifications are suitable and sufficient for all applications and reasonably foreseeable uses of the Products or systems.

8. Loss to Buyer's Property. Any designs, tools, patterns, materials, drawings, confidential information or equipment furnished by Buyer or any other items which become Buyer's property, will be considered obsolete and may be destroyed by Seller after two consecutive years have elapsed without Buyer ordering the items manufactured using such property. Seller shall not be responsible for any loss or damage to such property while it is in Seller's possession or control.

9. Special Tooling. A tooling charge may be imposed for any special tooling, including without limitation, dies, fixtures, molds and patterns, acquired to manufacture Products. Such special tooling shall be and remain Seller's property notwithstanding payment of any charges by Buyer. In no event will Buyer acquire any interest in apparatus belonging to Seller which is utilized in the manufacture of the Products, even if such apparatus has been specially converted or adapted for such manufacture and notwithstanding any charges paid by Buyer. Unless otherwise agreed, Seller shall have the right to alter, discard or otherwise dispose of any special tooling or other property in its sole discretion at any time.

10. Buyer's Obligation; Rights of Seller. To secure payment of all sums due or otherwise, Seller shall retain a security interest in the goods delivered and this agreement shall be deemed a Security Agreement under the Uniform Commercial Code. Buyer authorizes Seller as its attorney to execute and file on Buyer's behalf all documents Seller deems necessary to perfect its security interest.

11. Improper use and Indemnity. Buyer shall indemnify, defend, and hold Seller harmless from any claim, liability, damages, lawsuits, and costs (including attorney fees), whether for personal injury, property damage, patent, trademark or copyright infringement or any other claim, brought by or incurred by Buyer, Buyer's employees, or any other person, arising out of: (a) improper selection, improper application or other misuse of Products purchased by Buyer from Seller; (b) any act or omission, negligent or otherwise, of Buyer; (c) Seller's use of patterns, plans, drawings, or specifications furnished by Buyer to manufacture Product; or (d) Buyer's failure to comply with these terms and conditions. Seller shall not indemnify Buyer under any circumstance except as otherwise provided.

12. Cancellations and Changes. Orders shall not be subject to cancellation or change by Buyer for any reason, except with Seller's written consent and upon terms that will indemnify, defend and hold Seller harmless against all direct, incidental and consequential loss or damage. Seller may change product features, specifications, designs and availability with notice to Buyer.

13. Limitation on Assignment. Buyer may not assign its rights or obligations under this agreement without the prior written consent of Seller.

14. Force Majeure. Seller does not assume the risk and shall not be liable for delay or failure to perform any of Seller's obligations by reason of circumstances beyond the reasonable control of Seller (hereinafter "Events of Force Majeure"). Events of Force Majeure shall include without limitation: accidents, strikes or labor disputes, acts of any government or government agency, acts of nature, delays or failures in delivery from carriers or suppliers, shortages of materials, or any other cause beyond Seller's reasonable control.

15. Waiver and Severability. Failure to enforce any provision of this agreement will not waive that provision nor will any such failure prejudice Seller's right to enforce that provision in the future. Invalidation of any provision of this agreement by legislation or other rule of law shall not invalidate any other provision herein. The remaining provisions of this agreement will remain in full force and effect.

16. Termination. Seller may terminate this agreement for any reason and at any time by giving Buyer thirty (30) days written notice of termination. Seller may immediately terminate this agreement, in writing, if Buyer: (a) commits a breach of any provision of this agreement (b) appointments a trustee, receiver or custodian for all or any part of Buyer's property (c) files a petition for relief in bankruptcy on its own behalf, or by a third party (d) makes an assignment for the benefit of creditors, or (e) dissolves or liquidates all or a majority of its assets.

17. Governing Law. This agreement and the sale and delivery of all Products hereunder shall be deemed to have taken place in and shall be governed and construed in accordance with the laws of the State of Ohio, as applicable to contracts executed and wholly performed therein and without regard to conflicts of laws principles. Buyer irrevocably agrees and consents to the exclusive jurisdiction and venue of the courts of Cuyahoga County, Ohio with respect to any dispute, controversy or claim arising out of or relating to this agreement.

18. Indemnity for Infringement of Intellectual Property Rights. Seller shall have no liability for infringement of any patents, trademarks, copyrights, trade dress, trade secrets or similar rights except as provided in this Section. Seller will defend and indemnify Buyer against allegations of infringement of U.S. patents, U.S. trademarks, copyrights, trade dress and trade secrets ("Intellectual Property Rights"). Seller will defend at its expense and will pay the cost of any settlement or damages awarded in an action brought against Buyer based on an allegation that a Product sold pursuant to this Agreement infringes the Intellectual Property Rights of a third party. Seller's obligation to defend and indemnify Buyer is contingent on Buyer notifying Seller within ten (10) days after Buyer becomes aware of such allegations of infringement, and Seller having sole control over the defense of any allegations or actions including all negotiations for settlement or compromise. If a Product is subject to a claim that it infringes the Intellectual Property Rights of a third party, Seller may, at its sole expense and option, procure for Buyer the right to continue using the Product, replace or modify the Product so as to make it noninfringing, or offer to accept return of the Product and return the purchase price less a reasonable allowance for depreciation. Notwithstanding the foregoing, Seller shall have no liability for claims of infringement based on information provided by Buyer, or directed to Products delivered hereunder for which the designs are specified in whole or part by Buyer, or infringements resulting from the modification, combination or use in a system of any Product sold hereunder. The foregoing provisions of this Section shall constitute Seller's sole and exclusive liability and Buyer's sole and exclusive remedy for infringement of Intellectual Property Rights.

19. Entire Agreement. This agreement contains the entire agreement between the Buyer and Seller and constitutes the final, complete and exclusive expression of the terms of sale. All prior or contemporaneous written or oral agreements or negotiations with respect to the subject matter are herein merged.

20. Compliance with Law, U. K. Bribery Act and U.S. Foreign Corrupt Practices Act. Buyer agrees to comply with all applicable laws and regulations, including both those of the United Kingdom and the United States of America, and of the country or countries of the Territory in which Buyer may operate, including without limitation the U. K. Bribery Act, the U.S. Foreign Corrupt Practices Act ("FCPA") and the U.S. Anti-Kickback Act (the "Anti-Kickback Act"), and agrees to indemnify and hold harmless Seller from the consequences of any violation of such provisions by Buyer, its employees or agents. Buyer acknowledges that they are familiar with the provisions of the U. K. Bribery Act, the FCPA and the Anti-Kickback Act, and certifies that Buyer will adhere to the requirements thereof. In particular, Buyer represents and agrees that Buyer shall not make any payment or give anything of value, directly or indirectly to any governmental official, any foreign political party or official thereof, any candidate for foreign political office, or any commercial entity or person, for the purpose of influencing such person to purchase products or otherwise benefit the business of Seller.

02/12

Parker Hannifin Corporation
Instrumentation Products Division
Jacksonville, AL USA
http://www.parker.com/ipd

Tel: +45 63 12 83 00 | Email: ps@hymatik.com | www.hymatik.com | Hvidkaervej 27a, DK-5250 Odense SV, Denmark

Notes

Parker Hannifin Corporation
Instrumentation Products Division
Jacksonville, AL USA
http://www.parker.com/ipd

Notes

Parker Hannifin Corporation
Instrumentation Products Division
Jacksonville, AL USA
http://www.parker.com/ipd

Notes

Parker Hannifin Corporation
Instrumentation Products Division
Jacksonville, AL USA
http://www.parker.com/ipd

Parker's Motion & Control Technologies

At Parker, we're guided by a relentless drive to help our customers become more productive and achieve higher levels of profitability by engineering the best systems for their requirements. It means looking at customer applications from many angles to find new ways to create value. Whatever the motion and control technology need, Parker has the experience, breadth of product and global reach to consistently deliver. No company knows more about motion and control technology than Parker. For further info call 1-800-C-Parker.



AEROSPACE

Key Markets

- Aircraft engines
- Business & general aviation
- Commercial transports
- Land-based weapons systems
- Military aircraft
- Missiles & launch vehicles
- Regional transports
- Unmanned aerial vehicles

Key Products

- Flight control systems & components
- Fluid conveyance systems
- Fluid metering delivery & atomization devices
- Fuel systems & components
- Hydraulic systems & components
- Inert nitrogen generating systems
- Pneumatic systems & components
- Wheels & brakes



CLIMATE CONTROL

Key Markets

- Agriculture
- Air conditioning
- Food, beverage & dairy
- Life sciences & medical
- Precision cooling
- Processing
- Transportation

Key Products

- CO^2 controls
- Electronic controllers
- Filter driers
- Hand shut-off valves
- Hose & fittings
- Pressure regulating valves
- Refrigerant distributors
- Safety relief valves
- Solenoid valves
- Thermostatic expansion valves

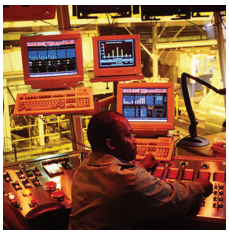

ELECTROMECHANICAL

Key Markets

- Aerospace
- Factory automation
- Life science & medical
- Machine tools
- Packaging machinery
- Paper machinery
- Plastics machinery & converting
- Primary metals
- Semiconductor & electronics
- Textile
- Wire & cable

Key Products

- AC/DC drives & systems
- Electric actuators, gantry robots & slides
- Electrohydrostatic actuation systems
- Electromechanical actuation systems
- Human machine interface
- Linear motors
- Stepper motors, servo motors, drives & controls
- Structural extrusions



FILTRATION

Key Markets

- Food & beverage
- Industrial machinery
- Life sciences
- Marine
- Mobile equipment
- Oil & gas
- Power generation
- Process
- Transportation

Key Products

- Analytical gas generators
- Compressed air & gas filters
- Condition monitoring
- Engine air, fuel & oil filtration & systems
- Hydraulic, lubrication & coolant filters
- Process, chemical, water & microfiltration filters
- Nitrogen, hydrogen & zero air generators



FLUID & GAS HANDLING

Key Markets

- Aerospace
- Agriculture
- Bulk chemical handling
- Construction machinery
- Food & beverage
- Fuel & gas delivery
- Industrial machinery
- Mobile
- Oil & gas
- Transportation
- Welding

Key Products

- Brass fittings & valves
- Diagnostic equipment
- Fluid conveyance systems
- Industrial hose
- PTFE & PFA hose, tubing & plastic fittings
- Rubber & thermoplastic hose & couplings
- Tube fittings & adapters
- Quick disconnects



HYDRAULICS

Key Markets

- Aerospace
- Aerial lift
- Agriculture
- Construction machinery
- Forestry
- Industrial machinery
- Mining
- Oil & gas
- Power generation & energy
- Truck hydraulics

Key Products

- Diagnostic equipment
- Hydraulic cylinders & accumulators
- Hydraulic motors & pumps
- Hydraulic systems
- Hydraulic valves & controls
- Power take-offs
- Rubber & thermoplastic hose & couplings
- Tube fittings & adapters
- Quick disconnects

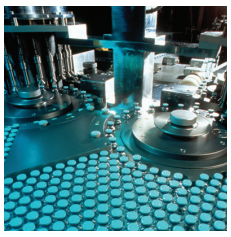

PNEUMATICS

Key Markets

- Aerospace
- Conveyor & material handling
- Factory automation
- Life science & medical
- Machine tools
- Packaging machinery
- Transportation & automotive

Key Products

- Air preparation
- Brass fittings & valves
- Manifolds
- Pneumatic accessories
- Pneumatic actuators & grippers
- Pneumatic valves & controls
- Quick disconnects
- Rotary actuators
- Rubber & thermoplastic hose & couplings
- Structural extrusions
- Thermoplastic tubing & fittings
- Vacuum generators, cups & sensors



PROCESS CONTROL

Key Markets

- **Chemical & refining**
- **Food, beverage & dairy**
- **Medical & dental**
- **Microelectronics**
- **Oil & gas**
- **Power generation**

Key Products

- **Analytical sample conditioning products & systems**
- **Fluoropolymer chemical delivery fittings, valves & pumps**
- **High purity gas delivery fittings, valves & regulators**
- **Instrumentation fittings, valves & regulators**
- **Medium pressure fittings & valves**
- **Process control manifolds**



SEALING & SHIELDING

Key Markets

- Aerospace
- Chemical processing
- Consumer
- Energy, oil & gas
- Fluid power
- General industrial
- Information technology
- Life sciences
- Military
- Semiconductor
- Telecommunications
- Transportation

Key Products

- Dynamic seals
- Elastomeric o-rings
- EMI shielding
- Extruded & precision-cut, fabricated elastomeric seals
- Homogeneous & inserted elastomeric shapes
- High temperature metal seals
- Metal & plastic retained composite seals
- Thermal management

ENGINEERING YOUR SUCCESS.

Tel: +45 63 12 83 00 | Email: ps@hymatik.com | www.hymatik.com | Hvidkaervej 27a, DK-5250 Odense SV, Denmark

Parker Worldwide

Europe, Middle East, Africa

AE – United Arab Emirates, Dubai
Tel: +971 4 8127100
parker.me@parker.com

AT – Austria, Wiener Neustadt
Tel: +43 (0)2622 23501-0
parker.austria@parker.com

AT – Eastern Europe, Wiener Neustadt
Tel: +43 (0)2622 23501 900
parker.easteurope@parker.com

AZ – Azerbaijan, Baku
Tel: +994 50 2233 458
parker.azerbaijan@parker.com

BE/LU – Belgium, Nivelles
Tel: +32 (0)67 280 900
parker.belgium@parker.com

BG – Bulgaria, Sofia
Tel: +359 2 980 1344
parker.bulgaria@parker.com

BY – Belarus, Minsk
Tel: +375 17 209 9399
parker.belarus@parker.com

CH – Switzerland, Etoy
Tel: +41 (0)21 821 87 00
parker.switzerland@parker.com

CZ – Czech Republic, Klecany
Tel: +420 284 083 111
parker.czechrepublic@parker.com

DE – Germany, Kaarst
Tel: +49 (0)2131 4016 0
parker.germany@parker.com

DK – Denmark, Ballerup
Tel: +45 43 56 04 00
parker.denmark@parker.com

ES – Spain, Madrid
Tel: +34 902 330 001
parker.spain@parker.com

FI – Finland, Vantaa
Tel: +358 (0)20 753 2500
parker.finland@parker.com

FR – France, Contamine s/Arve
Tel: +33 (0)4 50 25 80 25
parker.france@parker.com

GR – Greece, Athens
Tel: +30 210 933 6450
parker.greece@parker.com

HU – Hungary, Budaörs
Tel: +36 23 885 470
parker.hungary@parker.com

IE – Ireland, Dublin
Tel: +353 (0)1 466 6370
parker.ireland@parker.com

IT – Italy, Corsico (MI)
Tel: +39 02 45 19 21
parker.italy@parker.com

KZ – Kazakhstan, Almaty
Tel: +7 7273 561 000
parker.easteurope@parker.com

NL – The Netherlands, Oldenzaal
Tel: +31 (0)541 585 000
parker.nl@parker.com

NO – Norway, Asker
Tel: +47 66 75 34 00
parker.norway@parker.com

PL – Poland, Warsaw
Tel: +48 (0)22 573 24 00
parker.poland@parker.com

PT – Portugal, Leca da Palmeira
Tel: +351 22 999 7360
parker.portugal@parker.com

RO – Romania, Bucharest
Tel: +40 21 252 1382
parker.romania@parker.com

RU – Russia, Moscow
Tel: +7 495 645-2156
parker.russia@parker.com

SE – Sweden, Spånga
Tel: +46 (0)8 59 79 50 00
parker.sweden@parker.com

SK – Slovakia, Banská Bystrica
Tel: +421 484 162 252
parker.slovakia@parker.com

SL – Slovenia, Novo Mesto
Tel: +386 7 337 6650
parker.slovenia@parker.com

TR – Turkey, Istanbul
Tel: +90 216 4997081
parker.turkey@parker.com

UA – Ukraine, Kiev
Tel +380 44 494 2731
parker.ukraine@parker.com

UK – United Kingdom, Warwick
Tel: +44 (0)1926 317 878
parker.uk@parker.com

ZA – South Africa, Kempton Park
Tel: +27 (0)11 961 0700
parker.southafrica@parker.com

North America

CA – Canada, Milton, Ontario
Tel: +1 905 693 3000

US – USA, Cleveland
Tel: +1 216 896 3000

Asia Pacific

AU – Australia, Castle Hill
Tel: +61 (0)2-9634 7777

CN – China, Shanghai
Tel: +86 21 2899 5000

HK – Hong Kong
Tel: +852 2428 8008

IN – India, Mumbai
Tel: +91 22 6513 7081-85

JP – Japan, Tokyo
Tel: +81 (0)3 6408 3901

KR – South Korea, Seoul
Tel: +82 2 559 0400

MY – Malaysia, Shah Alam
Tel: +60 3 7849 0800

NZ – New Zealand, Mt Wellington
Tel: +64 9 574 1744

SG – Singapore
Tel: +65 6887 6300

TH – Thailand, Bangkok
Tel: +662 186 7000-99

TW – Taiwan, Taipei
Tel: +886 2 2298 8987

South America

AR – Argentina, Buenos Aires
Tel: +54 3327 44 4129

BR – Brazil, Sao Jose dos Campos
Tel: +55 800 727 5374

CL – Chile, Santiago
Tel: +56 2 623 1216

MX – Mexico, Toluca
Tel: +52 72 2275 4200

© 2019 Parker Hannifin Corporation. All rights reserved.

Catalog 4121-BV Jan2019

Parker Hannifin Corporation
Instrumentation Products Division
1005 A Cleaner Way
Huntsville, AL 35805
phone 256 881.2040
fax 256 881.5072
www.parker.com/ipd

Parker Hannifin Corporation
Instrumentation Products Division
2651 Alabama Highway 21 North
Jacksonville, AL 36265-681
phone 256 435 2130
fax 256 435 7718
www.parker.com/ipd

Tel: +45 63 12 83 00 | Email: ps@hymatik.com | www.hymatik.com | Hvidkaervej 27a, DK-5250 Odense SV, Denmark