Visit our homepage for additional support **parker.com/pmde**



Axial Piston Pumps

Series PVplus – Design Series 47
Variable Displacement

Parker

ENGINEERING YOUR SUCCESS.

Contents ..... Page

Introduction and general Information 4
Technical Data 5
Ordering Code 6
Pressure Controls 18
Remote Pressure Controls 20
Load Sensing Controls 22
Horse Power/Torque Controls 26
Performance Curves 30
Electronic P/Q Controls 32
Efficiency and Case Drain Flows 34
Accessories Control 40
Proportional pressure relief valve PVACRE* 42
Pump Dimensions 44
Control Dimensions 57
Electronic Module PQDXXA 61
Electronic Module PQDXXA-PROFINET-Z10 62
Through Drive – Mounting Kits 63
Through Drive – Flange Load Limitation 64
Through Drive – Shaft Load Limitations 65

Parker Hannifin Manufacturing Germany GmbH & Co. KG
Pump & Motor Division Europe
Chemnitz, Germany

Tel: +45 63 12 83 00 | Email: ps@hymatik.com | www.hymatik.com | Hvidkaervej 27a, DK-5250 Odense SV, Denmark

With through drive for single and multiple pumps

Swash plate type for open circuit

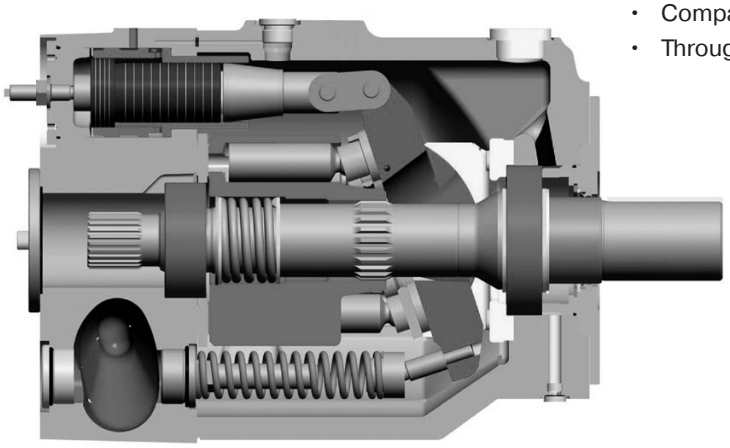

Technical Features

- Low noise level
- Fast response
- Service-friendly
- High self-priming speed
- Compact design
- Through drive for 100 % nominal torque

General Information

Fluid recommendations

Premium quality hydraulic mineral fluid is recommended, like HLP oils to DIN 51524 (part 2 & 3) or ISO6743/4 (HM & HV). Brugger-value recommended to be 30 N/mm^2 minimum for general application and 50 N/mm^2 for heavily loaded hydraulic equipment and fast cycling machines and/or high dynamic loads, measured in accordance with DIN 51 347-2. See also Document MSG30-3248/UK Parker Hydraulic Fluids.

Viscosity

The normal operating viscosity should range between 16 and 100 mm^2/s (cSt). Max. start-up viscosity is 1000 mm^2/s (cSt).

Filtration

For maximum pump and system component functionality and life, the system should be protected from contamination by effective filtration.
Fluid cleanliness should be in accordance with ISO classification ISO 4406:1999. The quality of filter elements should be in accordance with ISO standards.

General hydraulic systems for satisfactory operation: Class 20/18/15, according to ISO 4406:1999
Recommended cleanliness for maximum component life and functionality: Class 18/16/13, according to ISO 4406:1999

Seals

Check hydraulic fluid specification for chemical resistance of seal material.

Check temperature range of seal material and compare with max. system and ambient temperature.

N –	Nitrile (FKM shaft seal)	-25...+ 90 °C
V –	FKM (FKM shaft seal)	-25...+115 °C
W –	Nitrile (PTFE shaft seal)	-30...+ 90 °C

Note: The highest fluid temperature will be at the drain port of the pump, up to 25 °C higher than in the reservoir.

Parker Hannifin Manufacturing Germany GmbH & Co. KG
Pump & Motor Division Europe
Chemnitz, Germany

Tel: +45 63 12 83 00 | Email: ps@hymatik.com | www.hymatik.com | Hvidkaervej 27a, DK-5250 Odense SV, Denmark

		PV016	PV020	PV023	PV028	PV032	PV040	PV046
Frame size		1	1	1	1	2	2	2
Max. displacement	[cm^3/rev.]	16	20	23	28	32	40	46
Output flow at 1500 rpm	[l/min]	24	30	34,5	42	48	60	69
Nominal pressure pN	[bar]	350	350	350	350	350	350	350
Min. outlet pressure	[bar]	15	15	15	15	15	15	15
Max. pressure pmax at 20 % working cycle[1)]	[bar]	420	420	420	420	420	420	420
Case drain pressure, continuous	[bar]	0.5	0.5	0.5	0.5	0.5	0.5	0.5
Case drain pressure, max. peak	[bar]	2.0	2.0	2.0	2.0	2.0	2.0	2.0
Min. inlet pressure, abs.	[bar]	0.8	0.8	0.8	0.8	0.8	0.8	0.8
Max. inlet pressure	[bar]	16	16	16	16	16	16	16
Input power at 1500 rpm and 350 bar	[kW]	15.9	19.7	22.4	26.9	31.1	38.5	43.8
Max. input torque at 350 bar	[Nm]	94.5	118.1	135.9	165.4	184.3	230.4	265.0
Max speed at 1 bar, abs, inlet pressure	[rpm]	3000	3000	3000	3000	2800	2800	2800
Min. speed	[rpm]	50	50	50	50	50	50	50
Moment of inertia	[kgm^2]	0.0016	0.0016	0.0016	0.0016	0.0047	0.0047	0.0047
Weight	[kg]	19	19	19	19	30	30	30

		PV063	PV080	PV092	PV140	PV180	PV270	PV360
Frame size		3	3	3	4	4	5	6
Max. displacement	[cm^3/rev.]	63	80	92	140	180	270	360
Output flow at 1500 rpm	[l/min]	94.5	120	138	210	270	405	540
Nominal pressure pN	[bar]	350	350	350	350	350	350	350
Min. outlet pressure	[bar]	15	15	15	15	15	15	15
Max. pressure pmax at 20 % working cycle[1)]	[bar]	420	420	420	420	420	420	420
Case drain pressure, continuous	[bar]	0.5	0.5	0.5	0.5	0.5	0.5	0.5
Case drain pressure, max. peak	[bar]	2.0	2.0	2.0	2.0	2.0	2.0	2.0
Min. inlet pressure, abs.	[bar]	0.8	0.8	0.8	0.8	0.8	0.8	0.8
Max. inlet pressure	[bar]	16	16	16	16	16	16	16
Input power at 1500 rpm and 350 bar	[kW]	61.3	76.9	87.5	136.1	173.1	259.6	338.7
Max. input torque at 350 bar	[Nm]	365.2	463.7	533.3	812.4	1044.5	1550.5	2067.4
Max speed at 1 bar, abs, inlet pressure	[rpm]	2800	2500	2300	2400	2200	1800	1750
Min. speed	[rpm]	50	50	50	50	50	50	50
Moment of inertia	[kgm^2]	0.018	0.018	0.018	0.030	0.030	0.098	0.103
Weight	[kg]	59	59	59	90	90	172	180

[1)] Check adjustment range each compensator.

Tel: +45 63 12 83 00 | Email: ps@hymatik.com | www.hymatik.com | Hvidkaervej 27a, DK-5250 Odense SV, Denmark

P	V				R	1	K	1	T	1	N			

axial piston pump variable displacement-ment

size and displacement

rotation

variation

mounting interface

threads code

through drive code

coupling code

seals

control

see next page

Code	Displacement	Size
016	16 cm³/rev	1
020	20 cm³/rev	1
023	23 cm³/rev	1
028	28 cm³/rev	1

Code	Seals	Shaft seal
N	**NBR**	**FKM**
V	FKM	FKM
W	NBR	PTFE

Code	Rotation [1]
R	**Clockwise**
L	Counter clockwise

[1] When looked on shaft

Code	Coupling for through drive	as single part [7]
1	**Single pump, no coupling**	
H	with coupling 25 x 1.5 x 15, DIN 5480	MK-PVBG1K01
Y	with coupling SAE A 9T-16/32 DP	MK-PVBG1K11
A	with coupling SAE 11T-16/32 DP	MK-PVBG1K12
B	with coupling SAE B 13T-16/32 DP	MK-PVBG1K13
C	with coupling SAE B-B 15T-16/32 DP	MK-PVBG1K14

Code	Variation
1	**Standard**
4	Electronic displacement sensor (CIP)[2]
5	CIP-Sensor & Spec. adjustment [3] (4 & 9)
9	Special adjustment [3]

[2] not for horse power control
[3] requires Kxxxx number

Code	Through drive option	
	No adaptor for 2nd pump	
T	**Single pump prepared for through drive**	
	with adaptor for 2nd pump	as single part [7]
A	SAE A-2, Ø 82.55 mm	MK-PVBG1Axx
B	SAE B-4, Ø 101.6 mm	MK-PVBG1Bxx
J	metric, Ø 100 mm	MK-PVBG1Jxx

See dimensions for details

[7] to be ordered separately as single part
see page 63.

Code	Mounting interface		Shaft
K	**metr. ISO 3019/2**	**4-hole flange Ø100 mm**	**Cylindric, key**
L		**4-hole flange Ø100 mm**	**Splined, DIN 5480**
D	SAE ISO 3019/1	4-hole flange SAE B	Cylindric, key
E		4-hole flange SAE B-B	Splined, SAE

Code	Port[4]	Threads[5]
1	**BSPP**	**metric**
3	UNF	UNC
8[6]	ISO 6149	metric

[4] Drain, gage and flushing ports
[5] All mounting and connecting threads
[6] Mounting interface, code K and L only

Standard pump is not painted. Black painted pump and ATEX (excludes electronic components) certification (Zone 2) is available as special option. For additional informations please contact Parker Hannifin.

Parker Hannifin Manufacturing Germany GmbH & Co. KG
Pump & Motor Division Europe
Chemnitz, Germany

Tel: +45 63 12 83 00 | Email: ps@hymatik.com | www.hymatik.com | Hvidkaervej 27a, DK-5250 Odense SV, Denmark

Code			Control options
0	0	1	No control
1	0	0	With cover plate, no control function (fixed displacement pump)
M	M		Standard pressure control
M	R		Remote pressure control
M	F		Load Sensing (flow) control
M	T		Two spool LS control
			Control variation
		C	Standard version, integrated pilot valve [1]
		1	NG6 interface top side for pilot valves [1]
		2	Remote pressure port int. supply , NG6 interface [2]
		3	Remote pressure port ext. supply [2]
		W	With unloading function, 24VDC solenoid [1]
		K	Prop.-pilot valve type PVACRE...K35 mounted
		Z	Without integrated pilot valve, NG6 interface, for mounting of accessory code PVAC*
		B	Without integrated pilot valve, without NG6 interface [3]
		P	MTZ with mounted pilot valve PVAC1P [2]

[1] not for MT & *Z
[2] only for MT & *Z
[3] not for MT & MM

Horse power / Torque control				
Code				
			Nominal HP at 1.500 rpm	**Nominal torque**
B			3 kW	20 Nm
C			4 kW	25 Nm
D			5.5 kW	35 Nm
E			7.5 kW	50 Nm
G			11 kW	71 Nm
H			15 kW	97 Nm
K			18.5 kW	120 Nm
			Function	
	L		Horse power control with pressure control [4]	
	C		Horse power control with load sensing (single spool)	
	Z		Horse power control with two spool LS control	
			Control variation	
		C	Standard version, integrated pilot valve [1]	
		1	NG 6 interface top side	
		W	With unloading function, 24 VDC solenoid	
		K	Prop.-pilot valve type PVACRE...K35 mounted	
		Z	Without integrated pilot valve, NG6 interface, for mounting of accessory code PVAC* [4]	
		B	Without integrated pilot valve, without NG6 interface [1], [4]	
		P	*ZZ with mounted pilot valve PVAC1P [2]	

[4] control variation Z and B without pressure pilot

Code			Control option
			Electro hydraulic control [5]
F	D	V	Proportional displacement control, no pressure compensation
U	D		Proportional displacement control, with pressure compensation
			Control variation
		R	pilot operated pressure control, open NG6 interface
		K	pilot operated pressure control, proportional pilot valve type PVACRE...K35 mounted
		M	pilot operated pressure control, pressure sensor and proportional pilot valve type PVACRE...K35 mounted for pressure control and/or power control

[5] further info in MSG30-3254

Parker Hannifin Manufacturing Germany GmbH & Co. KG
Pump & Motor Division Europe
Chemnitz, Germany

Tel: +45 63 12 83 00 | Email: ps@hymatik.com | www.hymatik.com | Hvidkaervej 27a, DK-5250 Odense SV, Denmark

P	V				R	1	K	1	T	1	N			

axial piston pump variable displacement

size and displacement

rotation

variation

mounting interface

threads code

through drive code

coupling code

seals

control

see next page

Code	Displacement	Size
032	32 cm³/rev	2
040	40 cm³/rev	2
046	46 cm³/rev	2

Code	Seals	Shaft seal
N	**NBR**	**FKM**
V	FKM	FKM
W	NBR	PTFE

Code	Rotation [1]
R	**Clockwise**
L	Counter clockwise

[1] When looked on shaft

Code	Variation
1	**Standard**
4	Electronic displacement sensor (CIP)[2]
5	CIP-Sensor & Spec. adjustment [3] (4 & 9)
9	Special adjustment [3]

[2] not for horse power control
[3] requires Kxxxx number

Code	Coupling for through drive	as single part [7]
1	**Single pump, no coupling**	
H	with coupling 25 x 1.5 x 15, DIN 5480	MK-PVBG2K01
J	with coupling 32 x 1.5 x 20, DIN 5480	MK-PVBG2K02
Y	with coupling SAE A 9T-16/32 DP	MK-PVBG2K11
A	with coupling SAE 11T-16/32 DP	MK-PVBG2K12
B	with coupling SAE B 13T-16/32 DP	MK-PVBG2K13
C	with coupling SAE B-B 15T-16/32 DP	MK-PVBG2K14
D	with coupling SAE C 14T-12/24 DP	MK-PVBG2K15

Code	Mounting interface		Shaft
K	**metr. ISO 3019/2**	**4-hole flange Ø125 mm**	**Cylindric, key**
L		**4-hole flange Ø125 mm**	**Splined, DIN 5480**
D	SAE ISO 3019/1	4-hole flange SAE C	Cylindric, key
E		4-hole flange SAE C	Splined, SAE

Code	Through drive option	
	No adaptor for 2nd pump	
T	**Single pump prepared for through drive**	
	with adaptor for 2nd pump	as single part [7]
A	SAE A-2, Ø 82.55 mm	MK-PVBG2Axx
B	SAE B-2/4, Ø 101.6 mm	MK-PVBG2Bxx
C	SAE C-4, Ø 127 mm	MK-PVBG2Cxx
J	metric, Ø 100 mm	MK-PVBG2Jxx
K	metric, Ø 125 mm	MK-PVBG2Kxx

See dimensions for details
[7] to be ordered separately as single part
see page 63.

Code	Port[4]	Threads[5]
1	**BSPP**	**metric**
3	UNF	UNC
8[6]	ISO 6149	metric

[4] Drain, gage and flushing ports
[5] All mounting and connecting threads
[6] Mounting interface, code K and L only

Standard pump is not painted. Black painted pump and ATEX (excludes electronic components) certification (Zone 2) is available as special option. For additional informations please contact Parker Hannifin.

Parker Hannifin Manufacturing Germany GmbH & Co. KG
Pump & Motor Division Europe
Chemnitz, Germany

Tel: +45 63 12 83 00 | Email: ps@hymatik.com | www.hymatik.com | Hvidkaervej 27a, DK-5250 Odense SV, Denmark

Code			Control options
0	0	1	No control
1	0	0	With cover plate, no control function (fixed displacement pump)
M	M		Standard pressure control
M	R		Remote pressure control
M	F		Load Sensing (flow) control
M	T		Two spool LS control
			Control variation
		C	Standard version, integrated pilot valve [1]
		1	NG6 interface top side for pilot valves [1]
		2	Remote pressure port int. supply , NG6 interface [2]
		3	Remote pressure port ext. supply [2]
		W	With unloading function, 24VDC solenoid [1]
		K	Prop.-pilot valve type PVACRE...K35 mounted
		Z	Without integrated pilot valve, NG6 interface, for mounting of accessory code PVAC*
		B	Without integrated pilot valve, without NG6 interface [3]
		P	MTZ with mounted pilot valve PVAC1P [2]

[1] not for MT & *Z
[2] only for MT & *Z
[3] not for MT & MM

Horse power / Torque control				
Code				
			Nominal HP at 1.500 rpm	**Nominal torque**
D			5.5 kW	35 Nm
E			7.5 kW	50 Nm
G			11 kW	71 Nm
H			15 kW	97 Nm
K			18.5 kW	120 Nm
M			22 kW	142 Nm
S			30 kW	195 Nm
			Function	
	L		Horse power control with pressure control [4]	
	C		Horse power control with load sensing (single spool)	
	Z		Horse power control with two spool LS control	
			Control variation	
		C	Standard version, integrated pilot valve [1]	
		1	NG 6 interface top side	
		W	With unloading function, 24 VDC solenoid	
		K	Prop.-pilot valve type PVACRE...K35 mounted	
		Z	Without integrated pilot valve, NG6 interface, for mounting of accessory code PVAC* [4]	
		B	Without integrated pilot valve, without NG6 interface [1], [4]	
		P	*ZZ with mounted pilot valve PVAC1P [2]	

[4] control variation Z and B without pressure pilot

Code			Control option
			Electro hydraulic control [5]
F	D	V	Proportional displacement control, no pressure compensation
U	D		Proportional displacement control, with pressure compensation
			Control variation
		R	pilot operated pressure control, open NG6 interface
		K	pilot operated pressure control, proportional pilot valve type PVACRE...K35 mounted
		M	pilot operated pressure control, pressure sensor and proportional pilot valve type PVACRE...K35 mounted for pressure control and/or power control

[5] further info in MSG30-3254

Parker Hannifin Manufacturing Germany GmbH & Co. KG
Pump & Motor Division Europe
Chemnitz, Germany

Tel: +45 63 12 83 00 | Email: ps@hymatik.com | www.hymatik.com | Hvidkaervej 27a, DK-5250 Odense SV, Denmark

P	V				R	1	K	1	T	1	N			

axial piston pump variable displacement – size and displacement – rotation – variation – mounting interface – threads code – through drive code – coupling code – seals – control

see next page

Code	Displacement	Size
063	63 cm³/rev	3
080	80 cm³/rev	3
092	92 cm³/rev	3

Code	Seals	Shaft seal
N	**NBR**	**FKM**
V	FKM	FKM
W	NBR	PTFE

Code	Rotation [1]
R	**Clockwise**
L	Counter clockwise

[1] When looked on shaft

Code	Variation
1	**Standard**
4	Electronic displacement sensor (CIP)[2]
5	CIP-Sensor & Spec. adjustment [3] (4 & 9)
9	Special adjustment [3]

[2] not for horse power control
[3] requires Kxxxx number

Code	Coupling for through drive	as single part [8]
1	**Single pump, no coupling**	
H	with coupling 25 x 1.5 x 15, DIN 5480	MK-PVBG3K01
J	with coupling 32 x 1.5 x 20, DIN 5480	MK-PVBG3K02
K	with coupling 40 x 1.5 x 25, DIN 5480	MK-PVBG3K03
Y	with coupling SAE A 9T-16/32 DP	MK-PVBG3K11
A	with coupling SAE 11T-16/32 DP	MK-PVBG3K12
B	with coupling SAE B 13T-16/32 DP	MK-PVBG3K13
C	with coupling SAE B-B 15T-16/32 DP	MK-PVBG3K14
D	with coupling SAE C 14T-12/24 DP	MK-PVBG3K15
E	with coupling SAE C-C 17T-12/24 DP	MK-PVBG3K16
F	with coupling SAE D, E 13T-8/16 DP	MK-PVBG3K17

Code	Mounting interface		Shaft
K	**metr. ISO 3019/2**	**4-hole flange Ø160 mm**	**Cylindric, key**
L		**4-hole flange Ø160 mm**	**Splined, DIN 5480**
D	SAE ISO 3019/1	4-hole flange SAE D	Cylindric, key
E		4-hole flange SAE D	Splined, SAE

Code	Through drive option	
	No adaptor for 2nd pump	
T	**Single pump prepared for through drive**	
	with adaptor for 2nd pump	as single part [8]
A	SAE A-2, Ø 82.55 mm	MK-PVBG3Axx
B	SAE B-2/4, Ø 101.6 mm	MK-PVBG3Bxx
C	SAE C-2/4, Ø 127 mm	MK-PVBG3Cxx
D	SAE D-4, Ø 152.4 mm	MK-PVBG3Dxx
J	metric, Ø 100 mm	MK-PVBG3Jxx
K	metric, Ø 125 mm	MK-PVBG3Kxx
L	metric, Ø 160 mm	MK-PVBG3Lxx

See dimensions for details
[8] to be ordered separately as single part
see page 63.

Code	Port[4]	Threads[5]
1	**BSPP**	**metric**
3	UNF	UNC
4 [6]	BSPP	metr. M14
8 [7]	ISO 6149	metric

[4] Drain, gage and flushing ports
[5] All mounting and connecting threads
[6] For PV063-PV092 only: pressure port 1 1/4" with 4 x M14 instead of 4 x M12
[7] for mounting interface K and L only

Standard pump is not painted. Black painted pump and ATEX (excludes electronic components) certification (Zone 2) is available as special option. For additional informations please contact Parker Hannifin.

Parker Hannifin Manufacturing Germany GmbH & Co. KG
Pump & Motor Division Europe
Chemnitz, Germany

Tel: +45 63 12 83 00 | Email: ps@hymatik.com | www.hymatik.com | Hvidkaervej 27a, DK-5250 Odense SV, Denmark

Code			Control options
0	0	1	No control
1	0	0	With cover plate, no control function (fixed displacement pump)
M	M		Standard pressure control
M	R		Remote pressure control
M	F		Load Sensing (flow) control
M	T		Two spool LS control
			Control variation
		C	Standard version, integrated pilot valve [1]
		1	NG6 interface top side for pilot valves [1]
		2	Remote pressure port int. supply , NG6 interface [2]
		3	Remote pressure port ext. supply [2]
		W	With unloading function, 24VDC solenoid [1]
		K	Prop.-pilot valve type PVACRE...K35 mounted
		Z	Without integrated pilot valve, NG6 interface, for mounting of accessory code PVAC*
		B	Without integrated pilot valve, without NG6 interface [3]
		P	MTZ with mounted pilot valve PVAC1P [2]

[1] not for MT & *Z
[2] only for MT & *Z
[3] not for MT & MM

Horse power / Torque control				
Code				
			Nominal HP at 1.500 rpm	**Nominal torque**
G			11 kW	71 Nm
H			15 kW	97 Nm
K			18.5 kW	120 Nm
M			22 kW	142 Nm
S			30 kW	195 Nm
T			37 kW	240 Nm
U			45 kW	290 Nm
W			55 kW	355 Nm
			Function	
	L		Horse power control with pressure control [4]	
	C		Horse power control with load sensing (single spool)	
	Z		Horse power control with two spool LS control	
			Control variation	
		C	Standard version, integrated pilot valve [1]	
		1	NG 6 interface top side	
		W	With unloading function, 24 VDC solenoid	
		K	Prop.-pilot valve type PVACRE...K35 mounted	
		Z	Without integrated pilot valve, NG6 interface, for mounting of accessory code PVAC* [4]	
		B	Without integrated pilot valve, without NG6 interface [1], [4]	
		P	*ZZ with mounted pilot valve PVAC1P [2]	

[4] control variation Z and B without pressure pilot

Code			Control option
			Electro hydraulic control [5]
F	D	V	Proportional displacement control, no pressure compensation
U	D		Proportional displacement control, with pressure compensation
			Control variation
		R	pilot operated pressure control, open NG6 interface
		K	pilot operated pressure control, proportional pilot valve type PVACRE...K35 mounted
		M	pilot operated pressure control, pressure sensor and proportional pilot valve type PVACRE...K35 mounted for pressure control and/or power control

[5] further info in MSG30-3254

Parker Hannifin Manufacturing Germany GmbH & Co. KG
Pump & Motor Division Europe
Chemnitz, Germany

Tel: +45 63 12 83 00 | Email: ps@hymatik.com | www.hymatik.com | Hvidkaervej 27a, DK-5250 Odense SV, Denmark

P	V				R	1	K	1	T	1	N			

axial piston pump variable displacement

size and displacement

rotation

variation

mounting interface

threads code

through drive code

coupling code

seals

control

see next page

Code	Displacement	Size
140	**140 cm³/rev**	**4**
180	**180 cm³/rev**	**4**

Code	Rotation [1]
R	**Clockwise**
L	Counter clockwise

[1] When looked on shaft

Code	Variation
1	**Standard**
4	Electronic displacement sensor (CIP)[2]
5	CIP-Sensor & Spec. adjustment [3] (4 & 9)
9	Special adjustment [3]

[2] not for horse power control
[3] requires Kxxxx number

Code	Mounting interface		Shaft
K	**metr. ISO 3019/2**	**4-hole flange Ø160 mm**	**Cylindric, key**
L		**4-hole flange Ø160 mm**	**Splined, DIN 5480**
D	SAE ISO 3019/1	4-hole flange SAE D	Cylindric, key, SAE F
E		4-hole flange SAE D	Splined, SAE F, SAE D
F		4-hole flange SAE D	Cylindric, key, SAE D
G		4-hole flange SAE D	Splined, SAE D

Code	Port[4]	Threads[5]
1	**BSPP**	**metric**
3	UNF	UNC
4 [6]	BSPP	metr. M14
8 [7]	ISO 6149	metric

[4] Drain, gage and flushing ports
[5] All mounting and connecting threads
[6] Pressure port 1 1/4" with 4 x M14 instead of 4 x M12
[7] Mounting interface, code K and L only

Code	Coupling for through drive	as single part [8]
1	**Single pump, no coupling**	
H	with coupling 25 x 1.5 x 15, DIN 5480	MK-PVBG4K01
J	with coupling 32 x 1.5 x 20, DIN 5480	MK-PVBG4K02
K	with coupling 40 x 1.5 x 25, DIN 5480	MK-PVBG4K03
L	with coupling 50 x 2 x 24, DIN 5480	MK-PVBG4K04
Y	with coupling SAE A 9T-16/32 DP	MK-PVBG4K11
A	with coupling SAE 11T-16/32 DP	MK-PVBG4K12
B	with coupling SAE B 13T-16/32 DP	MK-PVBG4K13
C	with coupling SAE B-B 15T-16/32 DP	MK-PVBG4K14
D	with coupling SAE C 14T-12/24 DP	MK-PVBG4K15
E	with coupling SAE C-C 17T-12/24 DP	MK-PVBG4K16
F	with coupling SAE D, E 13T-8/16 DP	MK-PVBG4K17
G	with coupling SAE F 15T-8/16 DP	MK-PVBG4K18

Code	Through drive option	
	No adaptor for 2nd pump	
T	**Single pump prepared for through drive**	
	with adaptor for 2nd pump	as single part [8]
A	SAE A-2, Ø 82.55 mm	MK-PVBG4Axx
B	SAE B-2/4, Ø 101.6 mm	MK-PVBG4Bxx
C	SAE C-2/4, Ø 127.0 mm	MK-PVBG4Cxx
D	SAE D-4, Ø 152.4 mm	MK-PVBG4Dxx
J	metric, Ø 100 mm	MK-PVBG4Jxx
K	metric, Ø 125 mm	MK-PVBG4Kxx
L	metric, Ø 160 mm	MK-PVBG4Lxx

See dimensions for details
[8] to be ordered separately as single part see page 63.

Standard pump is not painted. Black painted pump and ATEX (excludes electronic components) certification (Zone 2) is available as special option. For additional informations please contact Parker Hannifin.

Parker Hannifin Manufacturing Germany GmbH & Co. KG
Pump & Motor Division Europe
Chemnitz, Germany

Tel: +45 63 12 83 00 | Email: ps@hymatik.com | www.hymatik.com | Hvidkaervej 27a, DK-5250 Odense SV, Denmark

Code			Control options
0	0	1	No control
1	0	0	With cover plate, no control function (fixed displacement pump)
M	M		Standard pressure control
M	R		Remote pressure control
M	F		Load Sensing (flow) control
M	T		Two spool LS control
			Control variation
		C	Standard version, integrated pilot valve [1]
		1	NG6 interface top side for pilot valves [1]
		2	Remote pressure port int. supply , NG6 interface [2]
		3	Remote pressure port ext. supply [2]
		W	With unloading function, 24VDC solenoid [1]
		K	Prop.-pilot valve type PVACRE...K35 mounted
		Z	Without integrated pilot valve, NG6 interface, for mounting of accessory code PVAC*
		B	Without integrated pilot valve, without NG6 interface [3]
		P	MTZ with mounted pilot valve PVAC1P [2]

[1] not for MT & *Z
[2] only for MT & *Z
[3] not for MT & MM

Horse power / Torque control				
Code				
			Nominal HP at 1.500 rpm	**Nominal torque**
K			18.5 kW	120 Nm
M			22 kW	142 Nm
S			30 kW	195 Nm
T			37 kW	240 Nm
U			45 kW	290 Nm
W			55 kW	355 Nm
Y			75 kW	485 Nm
Z			90 kW	585 Nm
2			110 kW	700 Nm
3			132 kW	840 Nm
			Function	
	L		Horse power control with pressure control [4]	
	C		Horse power control with load sensing (single spool)	
	Z		Horse power control with two spool LS control	
			Control variation	
		C	Standard version, integrated pilot valve [1]	
		1	NG 6 interface top side	
		W	With unloading function, 24 VDC solenoid	
		K	Prop.-pilot valve type PVACRE...K35 mounted	
		Z	Without integrated pilot valve, NG6 interface, for mounting of accessory code PVAC* [4]	
		B	Without integrated pilot valve, without NG6 interface [1], [4]	
		P	*ZZ with mounted pilot valve PVAC1P [2]	

[4] control variation Z and B without pressure pilot

Code			Control option
			Electro hydraulic control [5]
F	D	V	Proportional displacement control, no pressure compensation
U	D		Proportional displacement control, with pressure compensation
			Control variation
		R	pilot operated pressure control, open NG6 interface
		K	pilot operated pressure control, proportional pilot valve type PVACRE...K35 mounted
		M	pilot operated pressure control, pressure sensor and proportional pilot valve type PVACRE...K35 mounted for pressure control and/or power control

[5] further info in MSG30-3254

Tel: +45 63 12 83 00 | Email: ps@hymatik.com | www.hymatik.com | Hvidkaervej 27a, DK-5250 Odense SV, Denmark

P	V				R	1	K	1	T	1	N			

axial piston pump variable displacement – size and displacement – rotation – variation – mounting interface – threads code – through drive code – coupling code – seals – control

see next page

Code	Displacement	Size
270	**270 cm³/rev**	**5**

Code	Rotation [1]
R	**Clockwise**
L	Counter clockwise

[1] When looked on shaft

Code	Variation
1	**Standard**
4	Electronic displacement sensor (CIP)[2]
5	CIP-Sensor & Spec. adjustment [3] (4 & 9)
9	Special adjustment [3]

[2] not for horse power control
[3] requires Kxxxx number

Code	Mounting interface		Shaft
K	**metr. ISO 3019/2**	**4-hole flange Ø200 mm**	**Cylindric, key**
L		**4-hole flange Ø200 mm**	**Splined, DIN 5480**
D	SAE ISO 3019/1	4-hole flange SAE E	Cylindric, key
E		4-hole flange SAE E	Splined, SAE

Code	Port[4]	Threads[5]
1	**BSPP**	**metric**
3	UNF	UNC
8	ISO 6149	metric

[4] Drain, gage and flushing ports
[5] All mounting and connecting threads

Code	Seals	Shaft seal
N	**NBR**	**FKM**
V	FKM	FKM
W	NBR	PTFE

Code	Coupling for through drive	as single part [6]
1	**Single pump, no coupling**	
H	with coupling 25 x 1.5 x 15, DIN 5480	MK-PVBG5K01
J	with coupling 32 x 1.5 x 20, DIN 5480	MK-PVBG5K02
K	with coupling 40 x 1.5 x 25, DIN 5480	MK-PVBG5K03
L	with coupling 50 x 2 x 24, DIN 5480	MK-PVBG5K04
M	with coupling 60 x 2 x 28, DIN 5480	MK-PVBG5K05
Y	with coupling SAE A 9T-16/32 DP	MK-PVBG5K11
A	with coupling SAE - 11T-16/32 DP	MK-PVBG5K12
B	with coupling SAE B 13T-16/32 DP	MK-PVBG5K13
C	with coupling SAE B-B 15T-16/32 DP	MK-PVBG5K14
D	with coupling SAE C 14T-12/24 DP	MK-PVBG5K15
E	with coupling SAE C-C 17T-12/24 DP	MK-PVBG5K16
F	with coupling SAE D, E 13T-8/16 DP	MK-PVBG5K17
G	with coupling SAE F 15T-8/16 DP	MK-PVBG5K18

Code	Through drive option	
	No adaptor for 2nd pump	
T	**Single pump prepared for through drive**	
	with adaptor for 2nd pump	as single part [6]
A	SAE A-2, Ø 82.55 mm	MK-PVBG5Axx
B	SAE B-2/4, Ø 101.6 mm	MK-PVBG5Bxx
C	SAE C-2/4, Ø 127 mm	MK-PVBG5Cxx
D	SAE D-4, Ø 152.4 mm	MK-PVBG5Dxx
E	SAE E-4, Ø 165.1 mm	MK-PVBG5Exx
J	metric, Ø 100 mm	MK-PVBG5Jxx
K	metric, Ø 125 mm	MK-PVBG5Kxx
L	metric, Ø 160 mm	MK-PVBG5Lxx
M	metric, Ø 200 mm	MK-PVBG5Mxx

See dimensions for details

[6] to be ordered separately as single part
see page 63.

Standard pump is not painted. Black painted pump and ATEX (excludes electronic components) certification (Zone 2) is available as special option. For additional informations please contact Parker Hannifin.

Parker Hannifin Manufacturing Germany GmbH & Co. KG
Pump & Motor Division Europe
Chemnitz, Germany

Tel: +45 63 12 83 00 | Email: ps@hymatik.com | www.hymatik.com | Hvidkaervej 27a, DK-5250 Odense SV, Denmark

Code			Control options
0	0	1	No control
1	0	0	With cover plate, no control function (fixed displacement pump)
M	M		Standard pressure control
M	R		Remote pressure control
M	F		Load Sensing (flow) control
M	T		Two spool LS control
			Control variation
		C	Standard version, integrated pilot valve [1]
		1	NG6 interface top side for pilot valves [1]
		2	Remote pressure port int. supply , NG6 interface [2]
		3	Remote pressure port ext. supply [2]
		W	With unloading function, 24VDC solenoid [1]
		K	Prop.-pilot valve type PVACRE...K35 mounted
		Z	Without integrated pilot valve, NG6 interface, for mounting of accessory code PVAC*
		B	Without integrated pilot valve, without NG6 interface [3]
		P	MTZ with mounted pilot valve PVAC1P [2]

[1] not for MT & *Z
[2] only for MT & *Z
[3] not for MT & MM

Horse power / Torque control				
Code				
			Nominal HP at 1.500 rpm	**Nominal torque**
T			37 kW	240 Nm
U			45 kW	290 Nm
W			55 kW	350 Nm
Y			75 kW	480 Nm
Z			90 kW	580 Nm
2			110 kW	700 Nm
3			132 kW	840 Nm
4			160 kW	1020 Nm
5			180 kW	1150 Nm
6			200 kW	1280 Nm
Function				
	L		Horse power control with pressure control [4]	
	C		Horse power control with load sensing (single spool)	
	Z		Horse power control with two spool LS control	
Control variation				
		C	Standard version, integrated pilot valve [1]	
		1	NG 6 interface top side	
		W	With unloading function, 24 VDC solenoid	
		K	Prop.-pilot valve type PVACRE...K35 mounted	
		Z	Without integrated pilot valve, NG6 interface, for mounting of accessory code PVAC* [4]	
		B	Without integrated pilot valve, without NG6 interface [1], [4]	
		P	*ZZ with mounted pilot valve PVAC1P [2]	

[4] control variation Z and B without pressure pilot

Code			Control option
Electro hydraulic control [5]			
F	D	V	Proportional displacement control, no pressure compensation
U	D		Proportional displacement control, with pressure compensation
Control variation			
		R	pilot operated pressure control, open NG6 interface
		K	pilot operated pressure control, proportional pilot valve type PVACRE...K35 mounted
		M	pilot operated pressure control, pressure sensor and proportional pilot valve type PVACRE...K35 mounted for pressure control and/or power control

[5] further info in MSG30-3254

Parker Hannifin Manufacturing Germany GmbH & Co. KG
Pump & Motor Division Europe
Chemnitz, Germany

Tel: +45 63 12 83 00 | Email: ps@hymatik.com | www.hymatik.com | Hvidkaervej 27a, DK-5250 Odense SV, Denmark

P	V				R	1	K	1	T	1	N			

axial piston pump variable displacement – size and displacement – rotation – variation – mounting interface – threads code – through drive code – coupling code – seals – control

see next page

Code	Displacement	Size
360	**360 cm³/rev**	**6**

Code	Seals	Shaft seal
N	**NBR**	**FKM**
V	FKM	FKM

Code	Rotation [1]
R	**Clockwise**
L	Counter clockwise

[1] When looked on shaft

Code	Variation
1	**Standard**
4	Electronic displacement sensor (CIP)[2]
5	CIP-Sensor & Spec. adjustment [3] (4 & 9)
9	Special adjustment [3]

[2] not for horse power control
[3] requires Kxxxx number

Code	Mounting interface		Shaft
K	**metr. ISO 3019/2**	**4-hole flange Ø250 mm**	**Cylindric, key**
L		**4-hole flange Ø250 mm**	**Splined, DIN 5480**
R		**4-hole flange Ø224 mm**	**Cylindric, key**
T		**4-hole flange Ø224 mm**	**Splined, DIN 5480**
D	SAE ISO 3019/1	4-hole flange SAE E	Cylindric, key
E		4-hole flange SAE E	Splined, DIN 5480

Code	Port[4]	Threads[5]
1	**BSPP**	**metric**
3	UNF	UNC

[4] Drain, gage and flushing ports
[5] All mounting and connecting threads

Code	Coupling for through drive	as single part [6]
1	**Single pump, no coupling**	
H	with coupling 25 x 1.5 x 15, DIN 5480	MK-PVBG5K01
J	with coupling 32 x 1.5 x 20, DIN 5480	MK-PVBG5K02
K	with coupling 40 x 1.5 x 25, DIN 5480	MK-PVBG5K03
L	with coupling 50 x 2 x 24, DIN 5480	MK-PVBG5K04
M	with coupling 60 x 2 x 28, DIN 5480	MK-PVBG5K05
P	with coupling 70 x 3 x 22, DIN 5480	MK-PVBG5K06
Y	with coupling SAE A 9T-16/32 DP	MK-PVBG5K11
A	with coupling SAE - 11T-16/32 DP	MK-PVBG5K12
B	with coupling SAE B 13T-16/32 DP	MK-PVBG5K13
C	with coupling SAE B-B 15T-16/32 DP	MK-PVBG5K14
D	with coupling SAE C 14T-12/24 DP	MK-PVBG5K15
E	with coupling SAE C-C 17T-12/24 DP	MK-PVBG5K16
F	with coupling SAE D, E 13T-8/16 DP	MK-PVBG5K17
G	with coupling SAE F 15T-8/16 DP	MK-PVBG5K18

Code	Through drive option	
	No adaptor for 2nd pump	
T	**Single pump prepared for through drive**	
	with adaptor for 2nd pump	as single part [6]
A	SAE A-2, Ø 82.55 mm	MK-PVBG5Axx
B	SAE B-2/4, Ø 101.6 mm	MK-PVBG5Bxx
C	SAE C-2/4, Ø 127 mm	MK-PVBG5Cxx
D	SAE D-4, Ø 152.4 mm	MK-PVBG5Dxx
E	SAE E-4, Ø 165.1 mm	MK-PVBG5Exx
J	metric, Ø 100 mm	MK-PVBG5Jxx
K	metric, Ø 125 mm	MK-PVBG5Kxx
L	metric, Ø 160 mm	MK-PVBG5Lxx
M	metric, Ø 200 mm	MK-PVBG5Mxx

See dimensions for details
[6] to be ordered separately as single part
see page 63.

Standard pump is not painted. Black painted pump and ATEX (excludes electronic components) certification (Zone 2) is available as special option. For additional informations please contact Parker Hannifin.

Parker Hannifin Manufacturing Germany GmbH & Co. KG
Pump & Motor Division Europe
Chemnitz, Germany

Tel: +45 63 12 83 00 | Email: ps@hymatik.com | www.hymatik.com | Hvidkaervej 27a, DK-5250 Odense SV, Denmark

Code			Control options
0	0	1	No control
1	0	0	With cover plate, no control function (fixed displacement pump)
M	M		Standard pressure control
M	R		Remote pressure control
M	F		Load Sensing (flow) control
M	T		Two spool LS control
			Control variation
		C	Standard version, integrated pilot valve [1]
		2	Remote pressure port int. supply , NG6 interface [2]
		3	Remote pressure port ext. supply [2]
		W	With unloading function, 24VDC solenoid [1]
		K	Prop.-pilot valve type PVACRE...K35 mounted
		Z	Without integrated pilot valve, NG6 interface, for mounting of accessory code PVAC*
		B	Without integrated pilot valve, without NG6 interface [3]
		P	MTZ with mounted pilot valve PVAC1P [2]

[1] not for MT & *Z
[2] only for MT & *Z
[3] not for MT & MM

Horse power / Torque control				
Code				
			Nominal HP at 1.500 rpm	**Nominal torque**
U			45 kW	290 Nm
W			55 kW	350 Nm
Y			75 kW	480 Nm
Z			90 kW	580 Nm
2			110 kW	700 Nm
3			132 kW	840 Nm
4			160 kW	1020 Nm
5			180 kW	1150 Nm
6			200 kW	1280 Nm
			Function	
	L		Horse power control with pressure control [4]	
	C		Horse power control with load sensing (single spool)	
	Z		Horse power control with two spool LS control	
			Control variation	
		C	Standard version, integrated pilot valve [1]	
		1	NG 6 interface top side	
		W	With unloading function, 24 VDC solenoid	
		K	Prop.-pilot valve type PVACRE...K35 mounted	
		Z	Without integrated pilot valve, NG6 interface, for mounting of accessory code PVAC* [4]	
		B	Without integrated pilot valve, without NG6 interface [1], [4]	
		P	*ZZ with mounted pilot valve PVAC1P [2]	

Remark:
As torque is pretty much speed independent power at alternative speeds can get recalculated to 1500 rpm for code selection easily.

Example:
Your engine allows
90 kW @ 1800 rpm →

$$\frac{90\ \text{kW}}{1800\ \text{rpm}} \times 1500\ \text{rpm} = 75\ \text{kW}$$

→ select a first digit "Y"-control.

[4] control variation Z and B without pressure pilot

Code			Control option
			Electro hydraulic control [5]
F	D	V	Proportional displacement control, no pressure compensation
U	D		Proportional displacement control, with pressure compensation
			Control variation
		R	pilot operated pressure control, open NG6 interface
		K	pilot operated pressure control, proportional pilot valve type PVACRE...K35 mounted
		M	pilot operated pressure control, pressure sensor and proportional pilot valve type PVACRE...K35 mounted for pressure control and/or power control

[5] further info in MSG30-3254

Tel: +45 63 12 83 00 | Email: ps@hymatik.com | www.hymatik.com | Hvidkaervej 27a, DK-5250 Odense SV, Denmark

Standard Pressure Control

Control option MMC

The standard pressure control adjusts the pump displacement according to the actual need of flow in the system in order to keep the pressure constant.

Note: Upgrade to the MRC control by simply removing the ISO 6149 M14x1.5-plug. Thread adapters PVCCK** (last two digits defining seal and thread) are available separately if required. PVCCKN1 for ex. for NBR-sealed and towards G1/4 BSPP. Please consult spares list for all further versions.

Control schematics

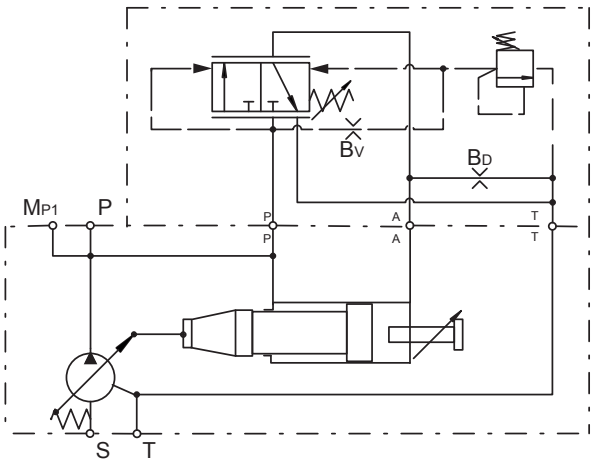

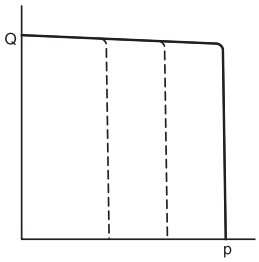

Response times of the pump are collected from a circuit as below by measuring the pumps swash angle movement at different pressures.

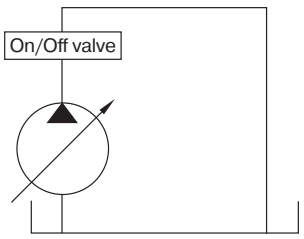

	Time on-stroke [ms]		Time de-stroke [ms]	
	against 50 bar	against 350 bar	zero stroke 50 bar	zero stroke 350 bar
PV360	520	180	120	82

Pressure adjustment range	15 to 420 bar
Factory setting pressure	50 bar
Differential pressure adjustment range	10 to 40 bar
Factory setting differential pressure	15 bar
Control oil consumption	Max 8.0 l/min
Typical pilot flow	approx 1.5 l/min

Dynamic characteristic of flow control *

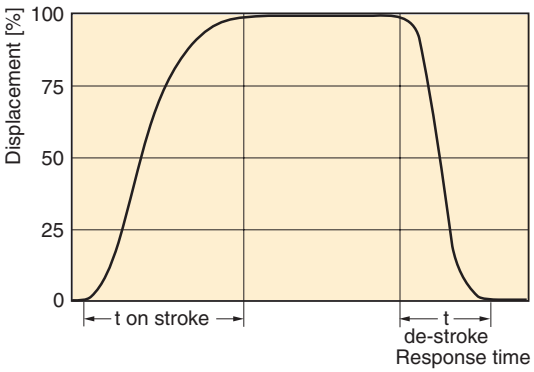

* Curve shown exaggerated

Parker Hannifin Manufacturing Germany GmbH & Co. KG
Pump & Motor Division Europe
Chemnitz, Germany

Tel: +45 63 12 83 00 | Email: ps@hymatik.com | www.hymatik.com | Hvidkaervej 27a, DK-5250 Odense SV, Denmark

Standard Pressure Control with NG6 Interface

Control option MM1

With code MM1 the standard pressure control has a valve interface size NG 6 DIN 24340 (CETOP 03 acc. RP35H, NFPA D03) on the top side.

This interface allows the mounting of accessories like multiple pressure selectors without the need of external piping and valve mounting.

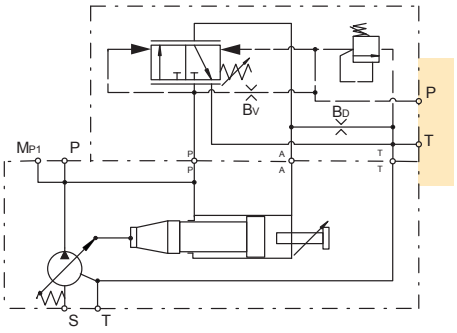

Standard Pressure Control with Electrical Unloading

Control option MMW

With code MMW a solenoid operated directional control valve (D1VW002KNJW) for electrical unloading is mounted on the control top side.

When the solenoid is de-energised, the pump compensates at a stand-by pressure of typically 15 bar. When the solenoid is energised, the pump compensates at the pressure adjusted on the integrated pilot valve.

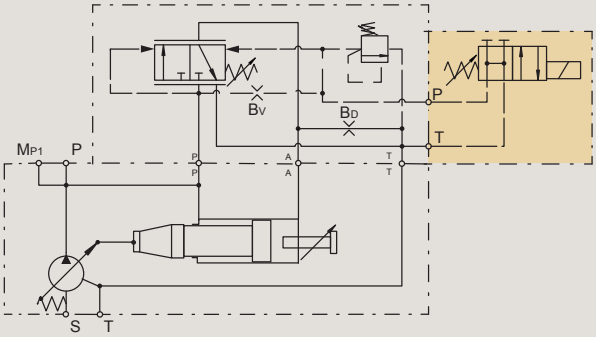

Standard Pressure Control with Proportional Pilot Valve

Control option MMK

With code MMK a proportional pilot valve of type PVACRE... K35 (see page 43) is mounted on the top side interface.

This allows a variation of the pump compensating pressure between 20 and 350 bar by an electrical signal.

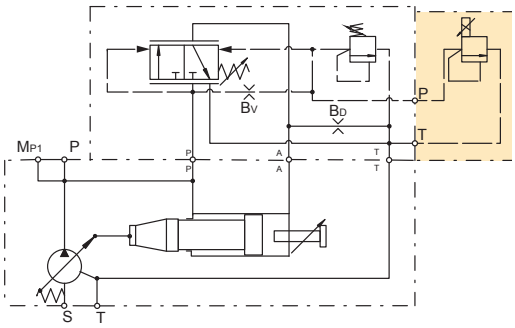

Standard Pressure Control without Integrated Pressure Pilot Valve

Control option MMZ

Control MMZ has no integrated pilot valve but a valve interface NG6 DIN 24340 on the top.

This version is recommended for valve accessories.

For operation at >350 bar please select respective valve accessories (see page 40)

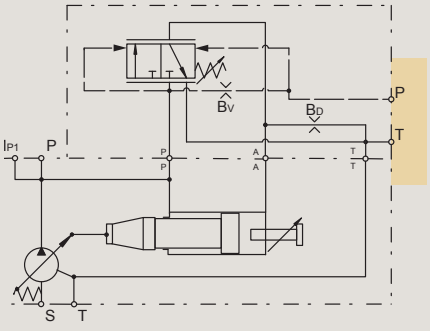

Parker Hannifin Manufacturing Germany GmbH & Co. KG
Pump & Motor Division Europe
Chemnitz, Germany

Tel: +45 63 12 83 00 | Email: ps@hymatik.com | www.hymatik.com | Hvidkaervej 27a, DK-5250 Odense SV, Denmark

Remote Pressure Control

Control option MRC

The remote pressure control adjusts the pump displacement according to the actual need of flow in the system in order to keep the pressure constant at a level given by a remotely installed pilot valve.

Control schematics

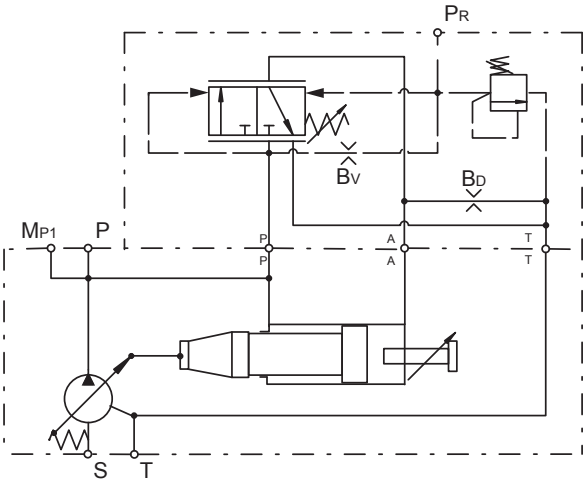

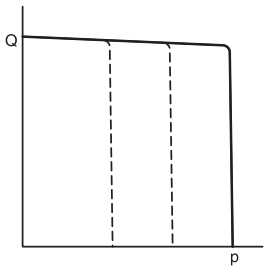

Response times of the pump are collected from a circuit as below by measuring the pumps swash angle movement at different pressures.

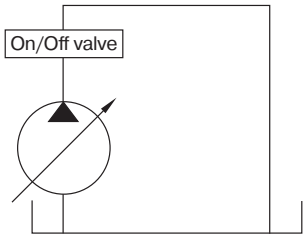

	Time on-stroke [ms]		Time de-stroke [ms]	
	against 50 bar	against 350 bar	zero stroke 50 bar	zero stroke 350 bar
PV360	520	180	120	82

Pressure adjustment range	15 to 420 bar
Factory setting pressure	50 bar
Differential pressure adjustment range	10 to 40 bar
Factory setting differential pressure	15 bar
Control oil consumption	Max 8.0 l/min
Typical pilot flow	approx 1.5 l/min

Dynamic characteristic of flow control *

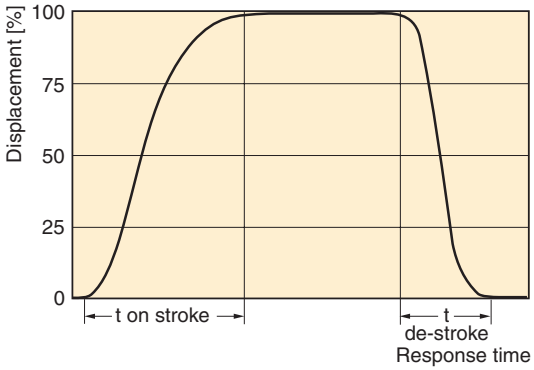

* Curve shown exaggerated

Parker Hannifin Manufacturing Germany GmbH & Co. KG
Pump & Motor Division Europe
Chemnitz, Germany

Tel: +45 63 12 83 00 | Email: ps@hymatik.com | www.hymatik.com | Hvidkaervej 27a, DK-5250 Odense SV, Denmark

Remote Pressure Control with NG6 Interface

Control option MR1

With code MR1 the remote pressure control has a valve interface size NG 6 DIN 24340 (CETOP 03 acc. RP35H, NFPA D03) on the top side.

This interface allows the mounting of accessories like multiple pressure selectors without the need of external piping and valve mounting.

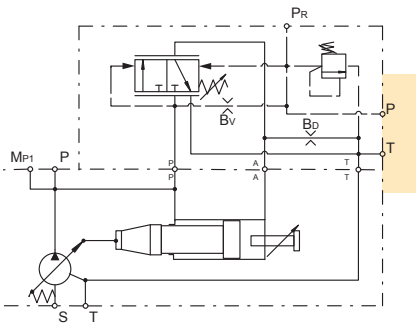

Remote Pressure Control with Electrical Unloading

Control option MRW

With code MRW a solenoid operated directional control valve (D1VW002KNJW) for electrical unloading is mounted on the control top side.

When the solenoid is de-energised, the pump compensates at a stand-by pressure of typically 15 bar. When the solenoid is energised, the pump compensates at the pressure adjusted on the integrated pilot valve.

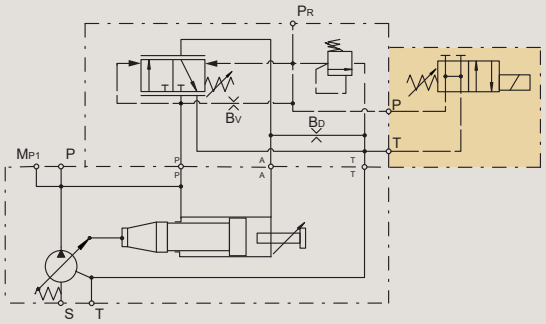

Remote Pressure Control with Proportional Pilot Valve

Control option MRK

With code MRK a proportional pilot valve of type PVACRE...K35 (see page 43) is mounted on the top side interface.

This allows a variation of the pump compensating pressure between 20 and 350 bar by an electrical signal.

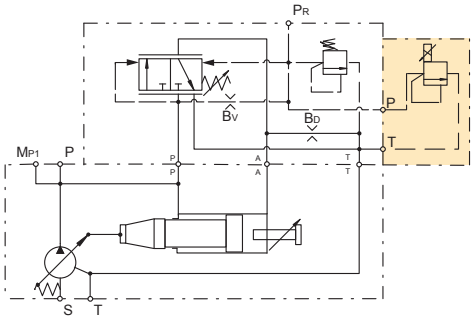

Remote Pressure Control without Integrated Pressure Pilot Valve

Control option MRZ

Control MRZ has no integratedpilot valve but a NG6 DIN 24340 interface topside.

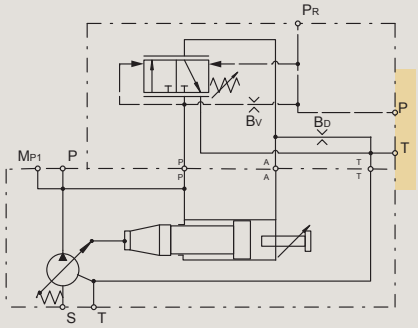

This version is recommended for valve accessories.

Control option MRB

Control MRB has no integrated pilot valve.

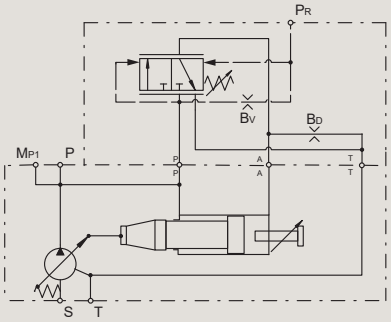

Parker Hannifin Manufacturing Germany GmbH & Co. KG
Pump & Motor Division Europe
Chemnitz, Germany

Tel: +45 63 12 83 00 | Email: ps@hymatik.com | www.hymatik.com | Hvidkaervej 27a, DK-5250 Odense SV, Denmark

Load Sensing Control

Control option MFC

The pilot pressure of the load sensing control is taken from a load sensing port in the hydraulic system. It is used to match pump flow to system demands. Integrated pilot valve allows pmax adjustment.

Control schematics

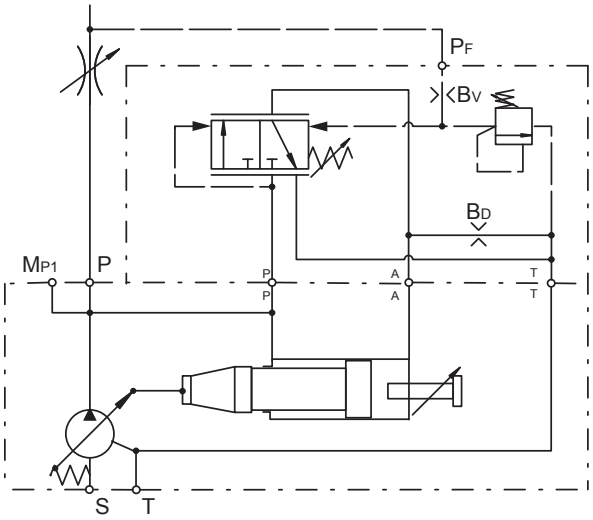

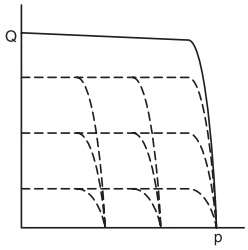

Response times of the pump are collected from a circuit as below by measuring the pumps swash angle movement at different pressures.

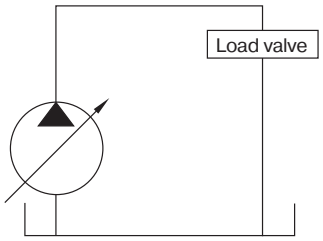

Dynamic characteristic of flow control *

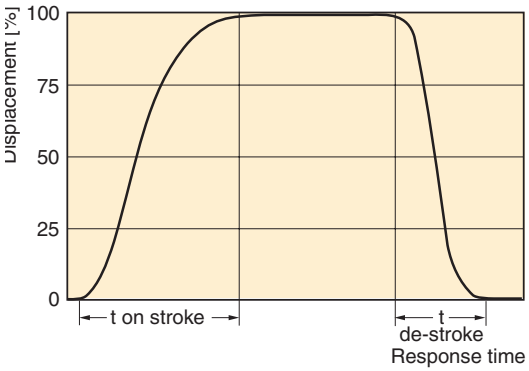

* Curve shown exaggerated

	Time on-stroke [ms]		Time de-stroke [ms]	
	stand-by to 50 bar	stand-by to 350 bar	50 bar to stand-by	350 bar to stand-by
PV360	500	690	830	50

Pressure adjustment range	15 to 420 bar
Factory setting pressure	50 bar
Differential pressure adjustment range	10 to 40 bar
Factory setting differential pressure	10 bar
Control oil consumption	Max 8.0 l/min
Typical pilot flow	approx 1.5 l/min

Parker Hannifin Manufacturing Germany GmbH & Co. KG
Pump & Motor Division Europe
Chemnitz, Germany

Tel: +45 63 12 83 00 | Email: ps@hymatik.com | www.hymatik.com | Hvidkaervej 27a, DK-5250 Odense SV, Denmark

Load Sensing Control with NG6 Interface

Control option MF1

With code MF1 the remote pressure control has a valve interface size NG 6 DIN 24340 (CETOP 03 acc. RP35H, NFPA D03) on the top side.

This interface allows the mounting of accessories like multiple pressure selectors without the need of external piping and valve mounting.

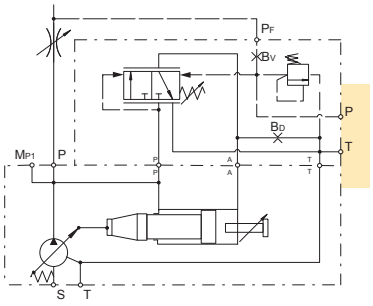

Load Sensing Control with Electrical Unloading

Control option MFW

With code MFW a solenoid operated directional control valve (D1VW002KNJW) for electrical unloading is mounted on the control top side.

When the solenoid is de-energised, the pump compensates at a stand-by pressure of typically 15 bar. When the solenoid is energised, the pump compensates at the pressure adjusted on the integrated pilot valve.

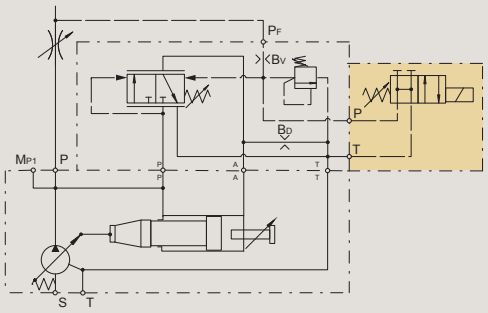

Load Sensing Control with Proportional Pilot Valve

Control option MFK

With code MFK a proportional pilot valve of type PVACRE...K35 (see page 43) is mounted on the top side interface.

This allows a variation of the pump compensating pressure between 20 and 350 bar by an electrical signal.

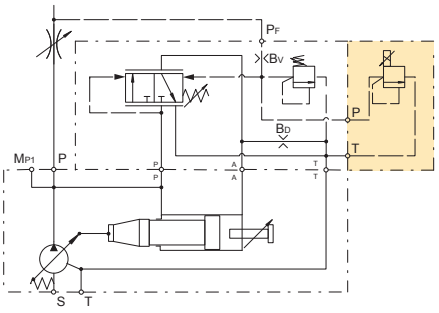

Load Sensing Control without Integrated Pressure Pilot Valve

Control option MFZ

Control MFZ has no integrated pilot valve but a NG6 DIN 24340 interface topside.

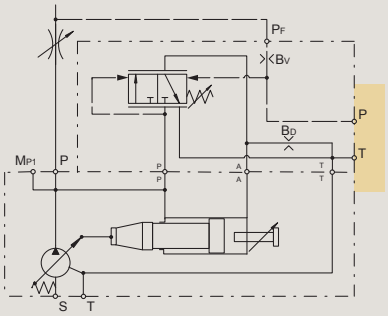

This version is recommended for valve accessories.

Control option MFB

Control MFB has no integrated pilot valve.

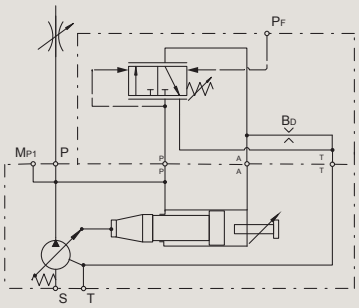

Parker Hannifin Manufacturing Germany GmbH & Co. KG
Pump & Motor Division Europe
Chemnitz, Germany

Tel: +45 63 12 83 00 | Email: ps@hymatik.com | www.hymatik.com | Hvidkaervej 27a, DK-5250 Odense SV, Denmark

2 Spool Load Sensing Control

Control option MTP

The pilot pressure of the load sensing control is taken from a load sensing port in the hydraulic system. It is used to match pump flow to system demands. With the 2 spool control the interaction of the two control functions is avoided by using two separate control valves for flow and pressure compensation.

Control schematics

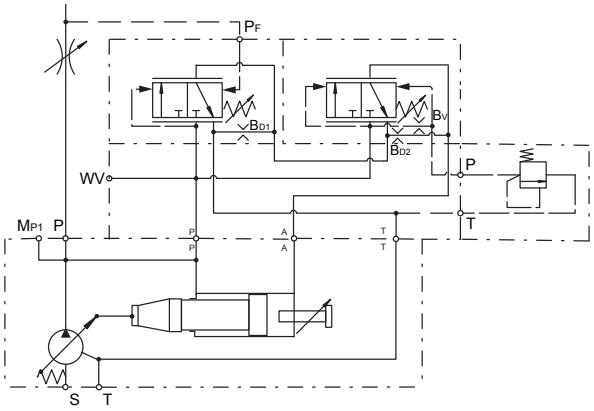

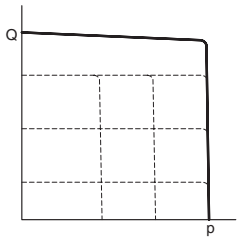

Response times of the pump are collected from a circuit as below by measuring the pumps swash angle movement at different pressures.

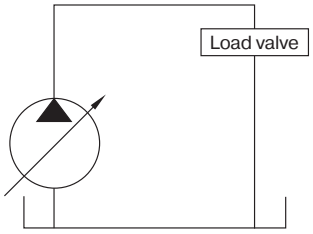

	Time on-stroke [ms]		Time de-stroke [ms]	
	stand-by to 50 bar	stand-by to 350 bar	50 bar to stand-by	350 bar to stand-by
PV360	920	670	1000	170

Pressure adjustment range	15 to 420 bar
Factory setting pressure	50 bar
Differential pressure adjustment range	10 to 40 bar
Factory setting differential pressure load sensing	10 bar
Factory setting differential pressure, pressure control	15 bar
Control oil consumption	Max 8.0 l/min
Typical pilot flow	approx 1.5 l/min

Dynamic characteristic of flow control *

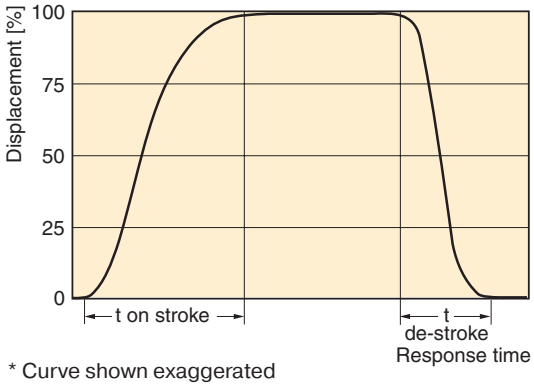

* Curve shown exaggerated

Parker Hannifin Manufacturing Germany GmbH & Co. KG
Pump & Motor Division Europe
Chemnitz, Germany

Tel: +45 63 12 83 00 | Email: ps@hymatik.com | www.hymatik.com | Hvidkaervej 27a, DK-5250 Odense SV, Denmark

2 Spool Load Sensing Control with NG6 Interface without Integrated Pressure Pilot Valve

Control option MTZ

Control MTZ has no integrated pressure pilot valve but NG 6 DIN 24340 (CETOP 03 acc. RP35H, NFPA D03) on the top side.

This interface allows the mounting of accessories like multiple pressure selectors without the need of external piping and valve mounting.

Note: The MT1 control option is not available for new releases as is it identical to the MTZ control.

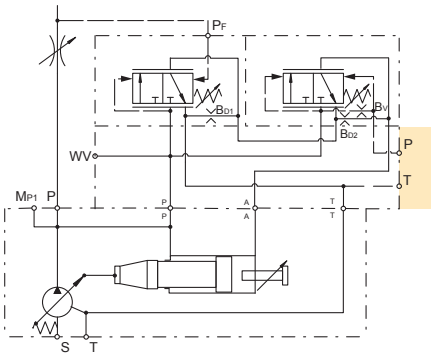

2 Spool Load Sensing Control with Proportional Pilot Valve

Control option MTK

With code MTK a proportional pilot valve of type PVACRE...K35 (see page 43) is mounted on the top side interface.

This allows a variation of the pump compensating pressure between 20 and 350 bar by an electrical signal.

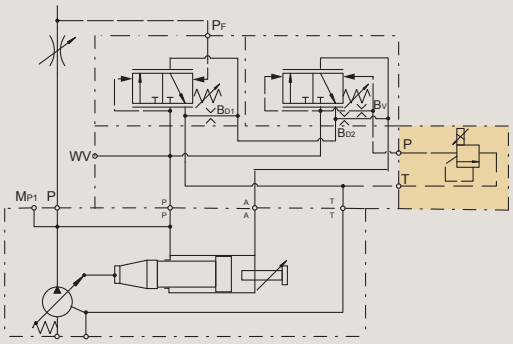

2 Spool Load Sensing Control without Integrated Pressure Pilot Valve

Control option MT2

Control MT2 has a valve interface NG6 DIN 24340 on the top side and remote pressure port internal supply.

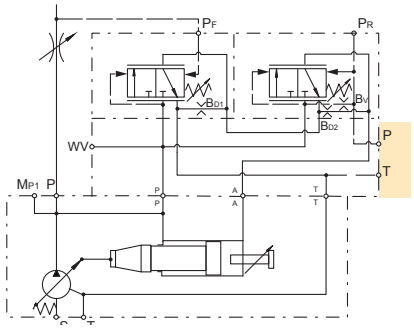

2 Spool Load Sensing Control without Integrated Pressure Pilot Valve

Control option MT3

Control MT3 with pressure remote port external supply. Incl. closed NG6-pad.

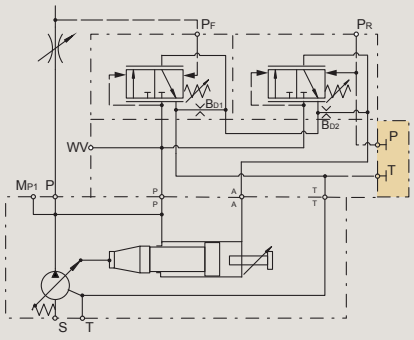

Parker Hannifin Manufacturing Germany GmbH & Co. KG
Pump & Motor Division Europe
Chemnitz, Germany

Tel: +45 63 12 83 00 | Email: ps@hymatik.com | www.hymatik.com | Hvidkaervej 27a, DK-5250 Odense SV, Denmark

Horse Power/Torque Controls with Pressure Control

Control option *LC

The horse power control type *L* provides the benefit of the pressure control, plus the ability to limit the input power the pump will draw. These controls are beneficial when the power available from the prime mover for the hydraulics is limited or the application power demand has both high flow/low pressure and low flow/high pressure duty cycles.

Control schematics

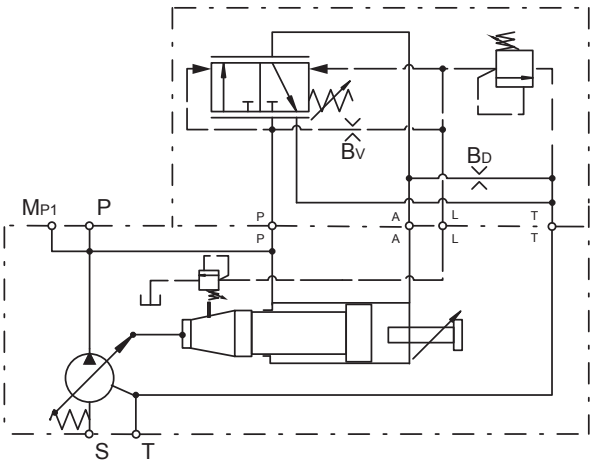

Response times of the pump are collected from a circuit as below by measuring the pumps swash angle movement at different pressures.

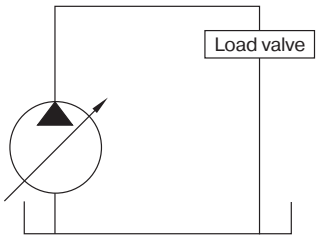

	Time on-stroke [ms]		Time de-stroke [ms]	
	against 50 bar	against 350 bar	zero stroke 50 bar	zero stroke 350 bar
PV360	90	90	100	100

Pressure adjustment range	15 to 350 bar
Factory setting pressure	350 bar
Differential pressure adjustment range	10 to 40 bar
Factory setting differential pressure	15 bar
Control oil consumption	Max 8.0 l/min
Typical pilot flow	approx 1.5 l/min

Dynamic characteristic of flow control *

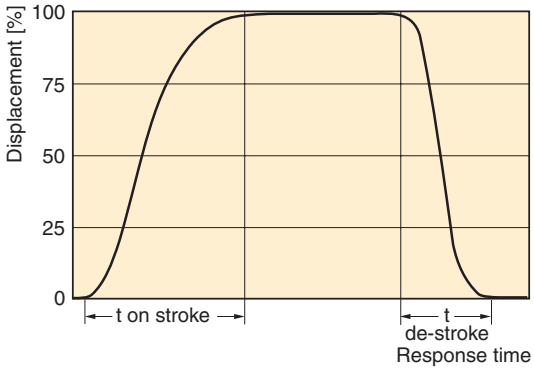

* Curve shown exaggerated

See Horse Power characteristic curves on page 30

Parker Hannifin Manufacturing Germany GmbH & Co. KG
Pump & Motor Division Europe
Chemnitz, Germany

Tel: +45 63 12 83 00 | Email: ps@hymatik.com | www.hymatik.com | Hvidkaervej 27a, DK-5250 Odense SV, Denmark

Horse Power/Torque Control with NG6 Interface

Control option *L1

With code *L1 the horse power control has a valve interface size NG 6 DIN 24340 (CETOP 03 acc. RP35H, NFPA D03) on the top side.

This interface allows the mounting of accessories like multiple pressure selectors without the need of external piping and valve mounting.

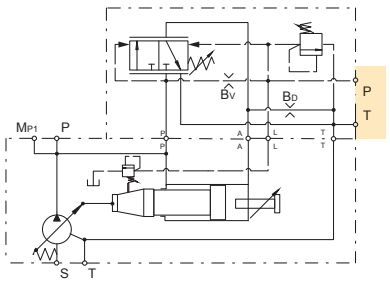

Horse Power/Torque Control with Electrical Unloading

Control option *LW

With code *LW a solenoid operated directional control valve (D1VW002KNJW) for electrical unloading is mounted on the control top side.

When the solenoid is de-energised, the pump compensates at a stand-by pressure of typically 15 bar. When the solenoid is energised, the pump compensates at the pressure adjusted on the integrated pilot valve.

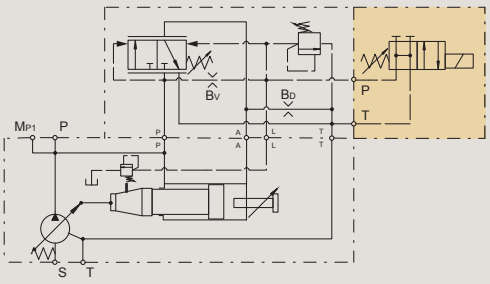

Horse Power/Torque Control with Proportional Pilot Valve

Control option *LK

With code *LK a proportional pilot valve of type PVACRE... K35 (see page 43) is mounted on the top side interface.

This allows a variation of the pump compensating pressure between 20 and 350 bar by an electrical signal.

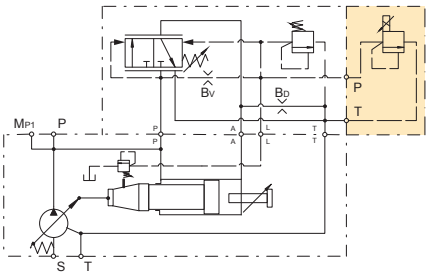

Horse Power/Torque Control without Integrated Pressure Pilot Valve

Control option *LZ

Control *LZ has no integrated pilot valve but a NG6 DIN 24340 interface topside.

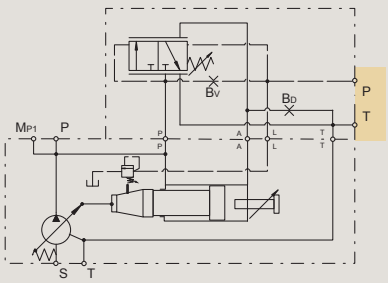

This version is recommended for valve accessories.

Control option *LB

Control *LB has no integrated pilot valve.

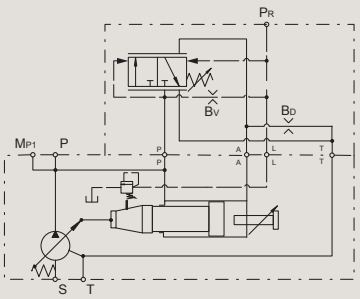

Parker Hannifin Manufacturing Germany GmbH & Co. KG
Pump & Motor Division Europe
Chemnitz, Germany

Tel: +45 63 12 83 00 | Email: ps@hymatik.com | www.hymatik.com | Hvidkaervej 27a, DK-5250 Odense SV, Denmark

Horse Power/Torque Controls with Load Sensing

Control option *CC

The horse power control type *C* provides the benefit of the load sensing control, plus the ability to limit the input power the pump will draw. These controls are beneficial when the power available from the prime mover for the hydraulics is limited or the application power demand has both high flow/low pressure and low flow/high pressure duty cycles.

Control schematics

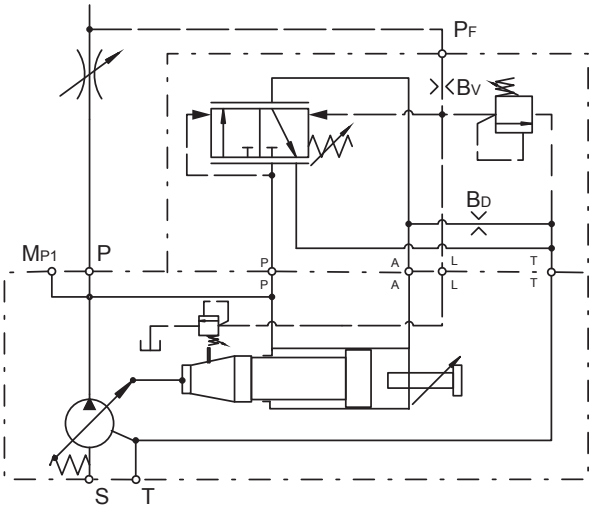

Response times of the pump are collected from a circuit as below by measuring the pumps swash angle movement at different pressures.

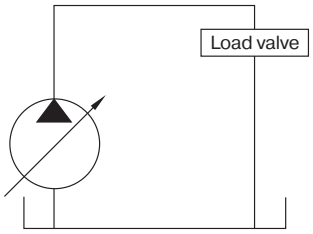

	Time on-stroke [ms]		Time de-stroke [ms]	
	stand-by to 50 bar	stand-by to 350 bar	50 bar to stand-by	350 bar to stand-by
PV360	90	90	100	100

Pressure adjustment range	15 to 350 bar
Factory setting pressure	350 bar
Differential pressure adjustment range	10 to 40 bar
Factory setting differential pressure	15 bar
Control oil consumption	Max 8.0 l/min
Typical pilot flow	approx 1.5 l/min

Dynamic characteristic of flow control *

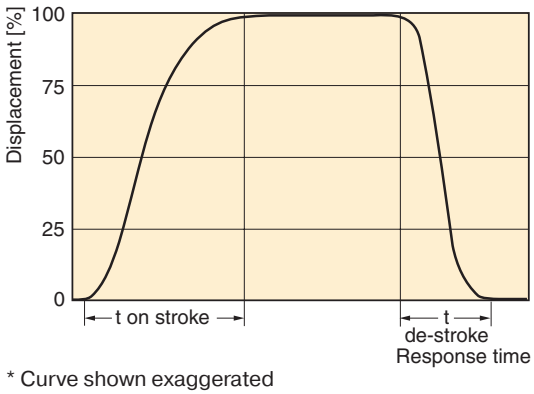

* Curve shown exaggerated

See Horse Power characteristic curves on page 30

Parker Hannifin Manufacturing Germany GmbH & Co. KG
Pump & Motor Division Europe
Chemnitz, Germany

Tel: +45 63 12 83 00 | Email: ps@hymatik.com | www.hymatik.com | Hvidkaervej 27a, DK-5250 Odense SV, Denmark

Horse Power/Torque Control with Load Sensing & NG6 Interface

Control option *C1

With code *C1 the horse power control has a valve interface size NG 6 DIN 24340 (CETOP 03 acc. RP35H, NFPA D03) on the top side.

This interface allows the mounting of accessories like multiple pressure selectors without the need of external piping and valve mounting.

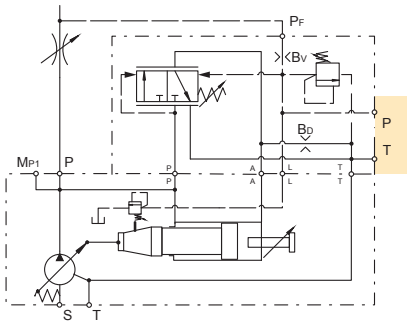

Horse Power/Torque Control with Load Sensing & Electrical Unloading

Control option *CW

With code *CW a solenoid operated directional control valve (D1VW002KNJW) for electrical unloading is mounted on the control top side.

When the solenoid is de-energised, the pump compensates at a stand-by pressure of typically 15 bar. When the solenoid is energised, the pump compensates at the pressure adjusted on the integrated pilot valve.

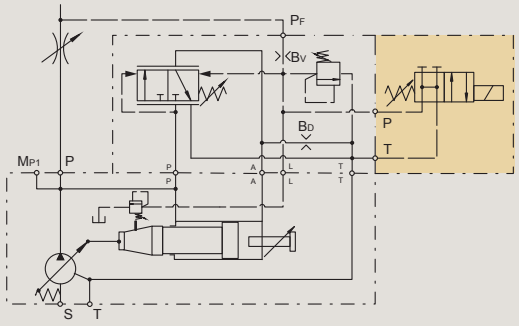

Horse Power/Torque Control with Load Sensing & Proportional Valve

Control option *CK

With code *CK a proportional pilot valve of type PVACRE...K35 (see page 43) is mounted on the top side interface.

This allows a variation of the pump compensating pressure between 20 and 350 bar by an electrical signal.

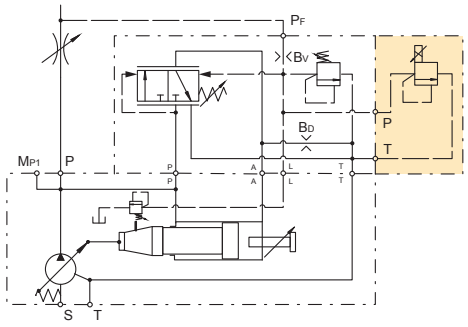

Horse Power/Torque Control with Load Sensing without Integrated Pilot Valve

Control option *CZ

Control *CZ has no integrated pilot valve but NG6 DIN 24340 interface topside.

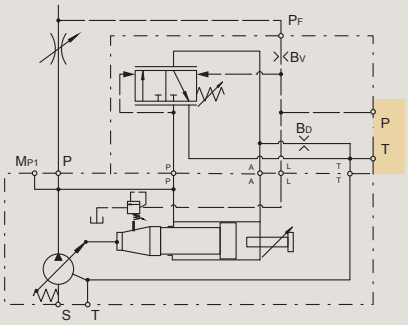

Control option *CB

Control *CB has no integrated pilot valve.

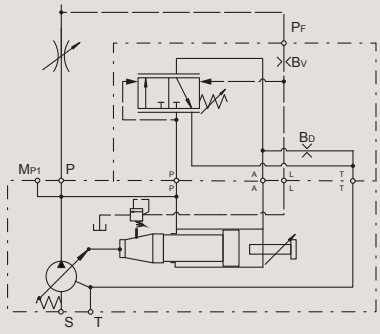

Parker Hannifin Manufacturing Germany GmbH & Co. KG
Pump & Motor Division Europe
Chemnitz, Germany

Tel: +45 63 12 83 00 | Email: ps@hymatik.com | www.hymatik.com | Hvidkaervej 27a, DK-5250 Odense SV, Denmark

Typical Horse Power/Torque Control Characteristics

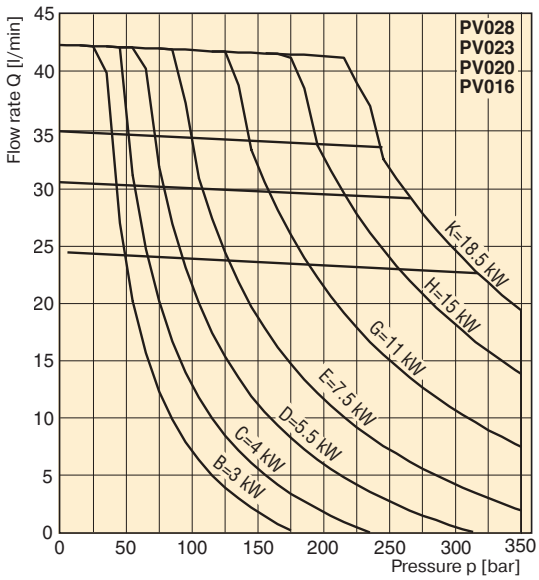

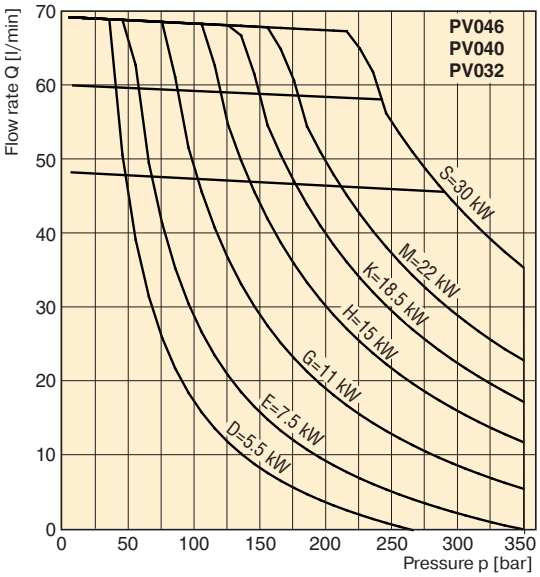

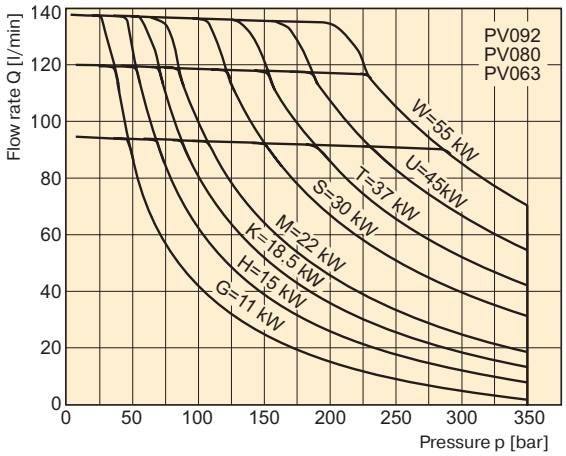

Tel: +45 63 12 83 00 | Email: ps@hymatik.com | www.hymatik.com | Hvidkaervej 27a, DK-5250 Odense SV, Denmark

Typical Horse Power/Torque Control Characteristics

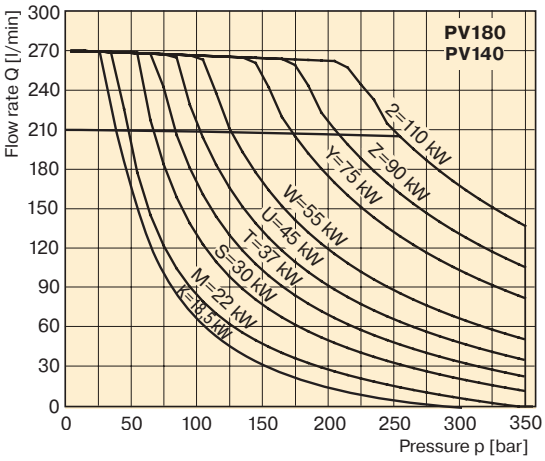

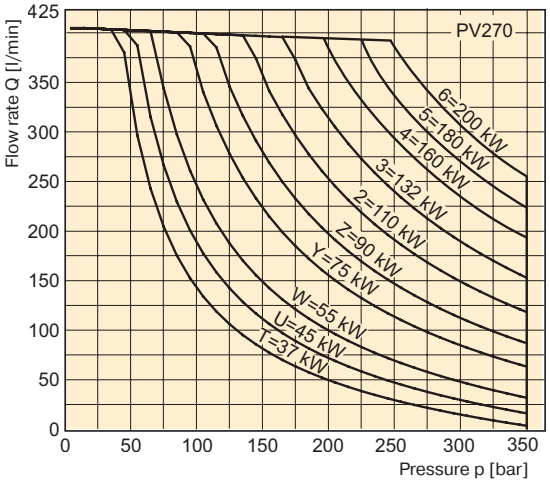

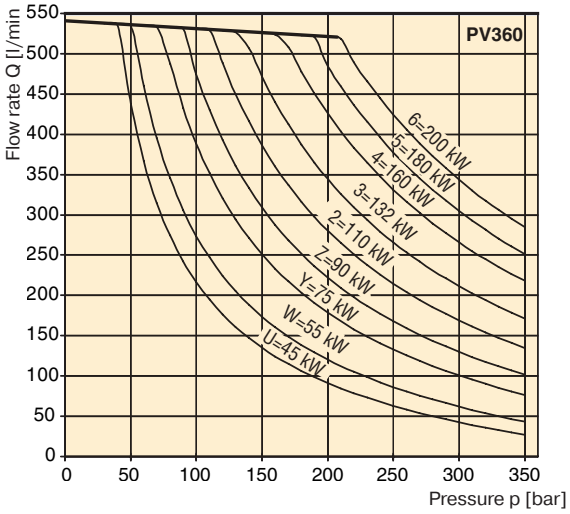

Speed	:	n = 1500 rev/min
Temperature	:	t = 50 °C
Fluid	:	HLP, ISO VG46
Viscosity	:	ν = 46 mm^2/s at 40 °C
Pressure	:	Maximum 350 bar, depending on HP level

Tel: +45 63 12 83 00 | Email: ps@hymatik.com | www.hymatik.com | Hvidkaervej 27a, DK-5250 Odense SV, Denmark

Proportional Displacement Control

Control option FDV

The proportional displacement control allows the adjustment of the pump's output flow by an electrical input signal. The actual displacement of the pump is monitored by an electronic displacement sensor and compared with the commanded displacement in an electronic control module PQDXXA-Z10. The command is given as an electrical input signal (0 – 10 V alternatively 4 – 20 mA) from the supervising machine control or a potentiometer.

Version FDV of the proportional control does not provide pressure compensation. Therefore the hydraulic circuit must be protected by a pressure relief valve.

New CIP-Sensor (contactless inductive position) eliminates drift due to wear and any manual sensor adjustments.

Control schematics

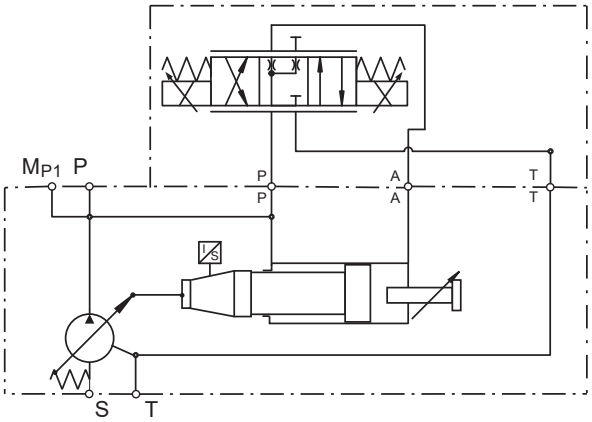

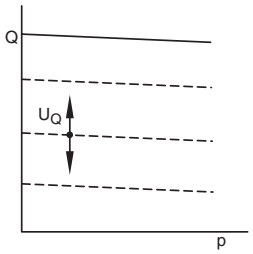

= FDV included

Response times of the pump are collected from a circuit as below by measuring the pumps swash angle movement at different pressures.

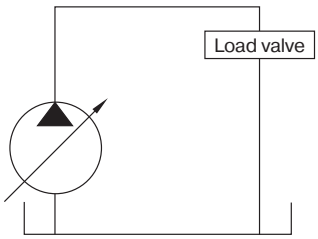

Dynamic characteristic of flow control *

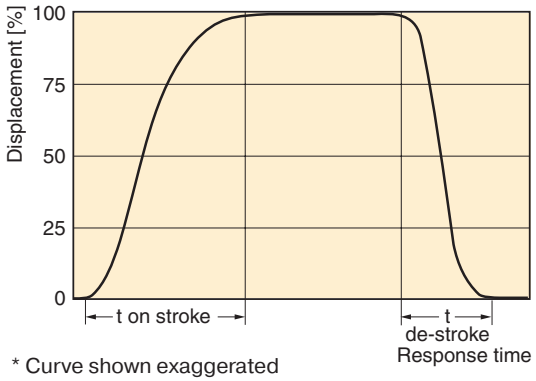

* Curve shown exaggerated

	Time on-stroke [ms]		Time de-stroke [ms]	
	stand-by to 50 bar	stand-by to 350 bar	50 bar to stand-by	350 bar to stand-by
PV360	255	154	266	183

Pressure adjustment range*	35 to 350 bar
Differential pressure adjustment range *	10 to 40 bar
Factory setting differential pressure *	15 bar
Control oil consumption (FDV only)	Max 0.3 l/min

* Data valid for UD* version

Internal pilot pressure required to control the pump	
FDV	15 bar
UDR	25 bar
UDK	25 bar
UDM	25 bar

Parker Hannifin Manufacturing Germany GmbH & Co. KG
Pump & Motor Division Europe
Chemnitz, Germany

Tel: +45 63 12 83 00 | Email: ps@hymatik.com | www.hymatik.com | Hvidkaervej 27a, DK-5250 Odense SV, Denmark

Proportional Displacement Control with Overriding Pressure Control

Control option UDR

Control version UDR provides electro-hydraulic displacement control and pressure stage mounted on an elbow manifold.

The elbow manifold provides NG6/D03 interface on top to mount a pressure pilot valve (not included in UDR).

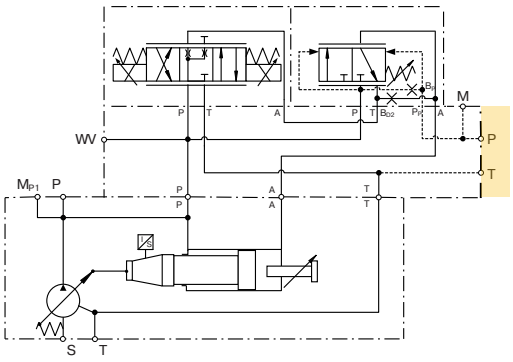

Proportional Displacement Control with Proportional Pressure Control

Control option UDK

Control version UDK features proportional pressure pilot valve PVACRE...K35, which enables for electro-hydraulic p/Q control.

By using the digital module PQDXXA-Z10 it is possible to control the displacement proportionally with overriding open loop proportional pressure control.

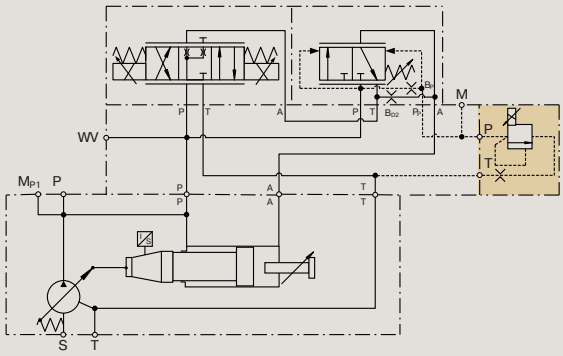

Proportional Displacement Control with Closed Loop Pressure Control

Control option UDM

Control version UDM includes pressure transducer Parker SCP 8181 CE. In combination with control module PQDXXA-Z10 both closed loop pressure control as well as electronic power limitation can be realized.

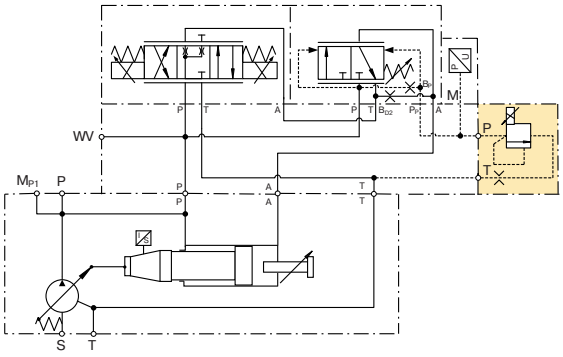

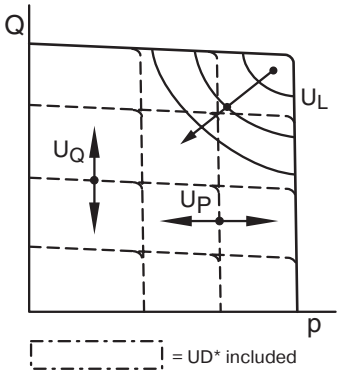

Parker Hannifin Manufacturing Germany GmbH & Co. KG
Pump & Motor Division Europe
Chemnitz, Germany

Tel: +45 63 12 83 00 | Email: ps@hymatik.com | www.hymatik.com | Hvidkaervej 27a, DK-5250 Odense SV, Denmark

Efficiency, power consumption

PV016

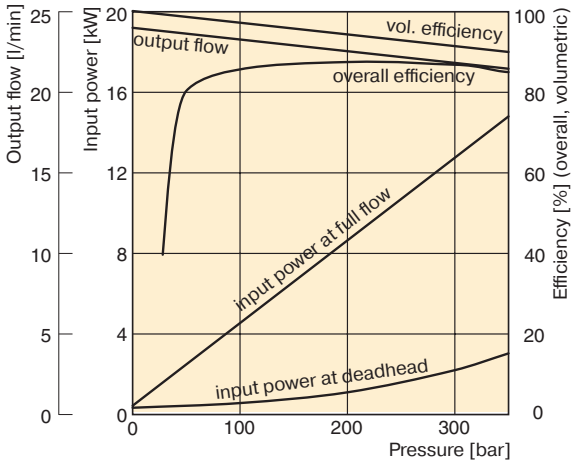

PV020

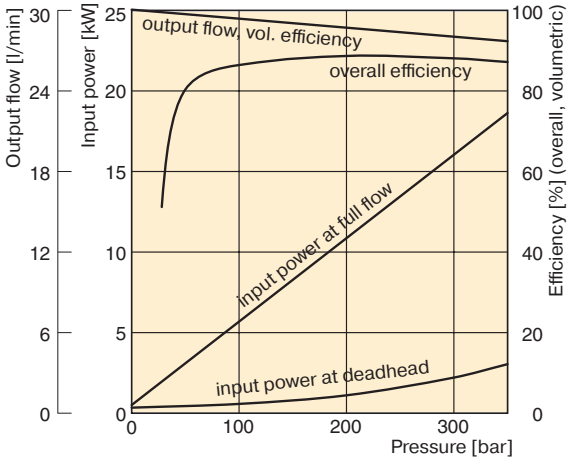

PV023

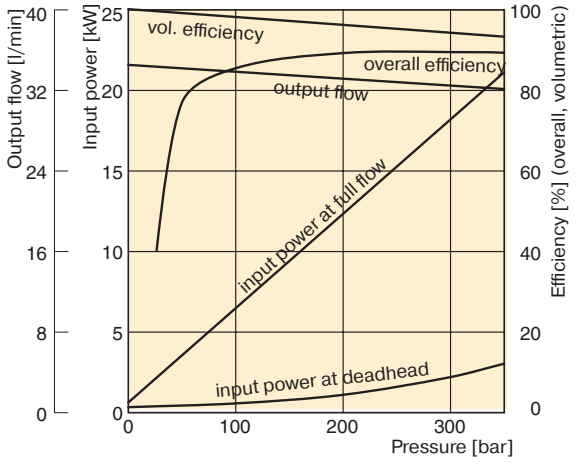

Efficiency and case drain flows PV016, PV020, PV023 and PV028

The efficiency and power graphs are measured at an input speed of n = 1500 rpm, a temperature of 50 °C and a fluid viscosity of 30 mm^2/s.

Case drain flow and compensator control flow leave via the drain port of the pump. To the values shown are to be added 1 to 1.2 l/min, if at pilot operated compensators the control flow of the pressure pilot valve also goes through the pump.

Please note: The values shown below are only valid for static operation. Under dynamic conditions and at rapid compensation of the pump the volume displaced by the servo piston also leaves the case drain port. This dynamic control flow can reach up to 40 l/min! Therefore the case drain line is to lead to the reservoir at full size and without restrictions as short and direct as possible.

Case drain flow PV016-028 with pressure compensator

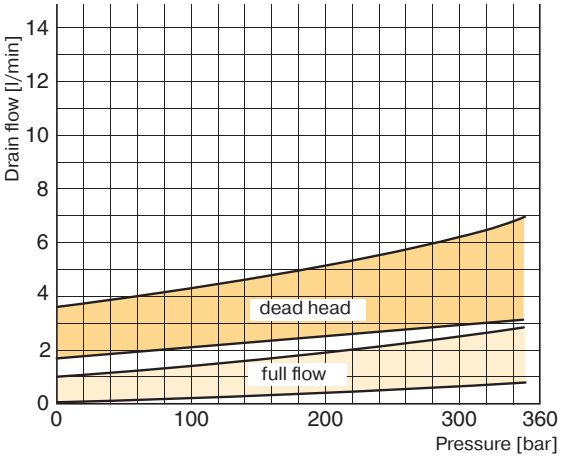

PV028

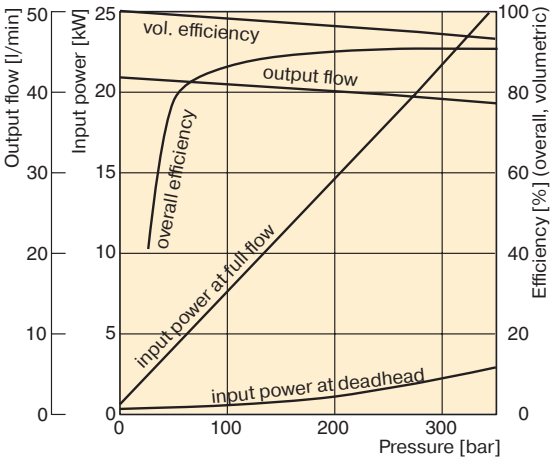

Parker Hannifin Manufacturing Germany GmbH & Co. KG
Pump & Motor Division Europe
Chemnitz, Germany

Tel: +45 63 12 83 00 | Email: ps@hymatik.com | www.hymatik.com | Hvidkaervej 27a, DK-5250 Odense SV, Denmark

Efficiency, power consumption

PV032

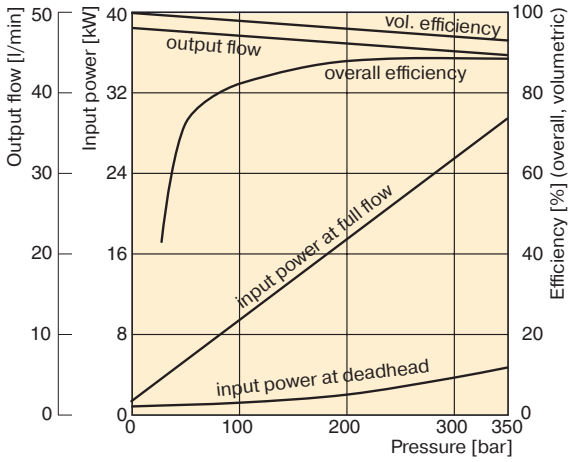

PV040

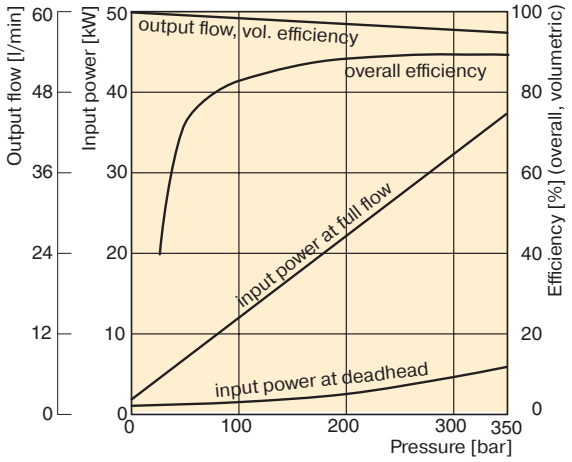

PV046

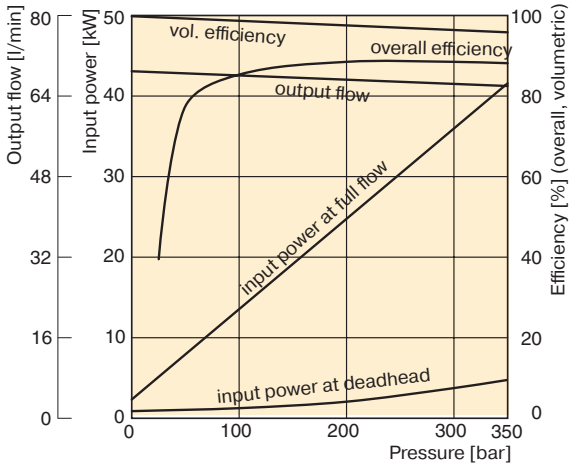

Efficiency and case drain flows PV032 to PV046

The efficiency and power graphs are measured at an input speed of n = 1500 rpm, a temperature of 50 °C and a fluid viscosity of 30 mm^2/s.

Case drain flow and compensator control flow leave via the drain port of the pump. To the values shown are to be added 1 to 1.2 l/min, if at pilot operated compensators the control flow of the pressure pilot valve also goes through the pump.

Please note: The values shown below are only valid for static operation. Under dynamic conditions and at rapid compensation of the pump the volume displaced by the servo piston also leaves the case drain port. This dynamic control flow can reach up to 60 l/min! Therefore the case drain line is to lead to the reservoir at full size and without restrictions as short and direct as possible.

Case drain flow PV032-046 with pressure compensator

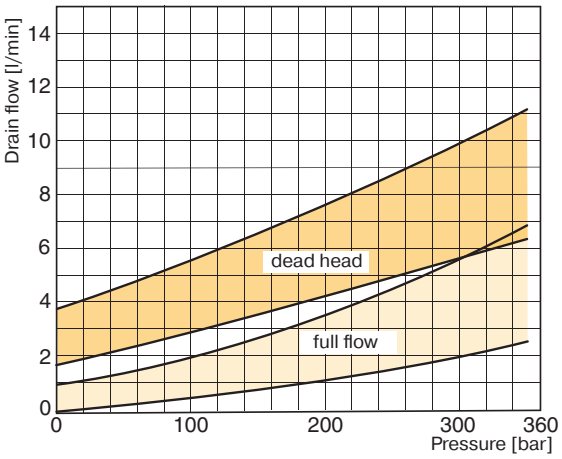

Parker Hannifin Manufacturing Germany GmbH & Co. KG
Pump & Motor Division Europe
Chemnitz, Germany

Tel: +45 63 12 83 00 | Email: ps@hymatik.com | www.hymatik.com | Hvidkaervej 27a, DK-5250 Odense SV, Denmark

Efficiency, power consumption

PV063

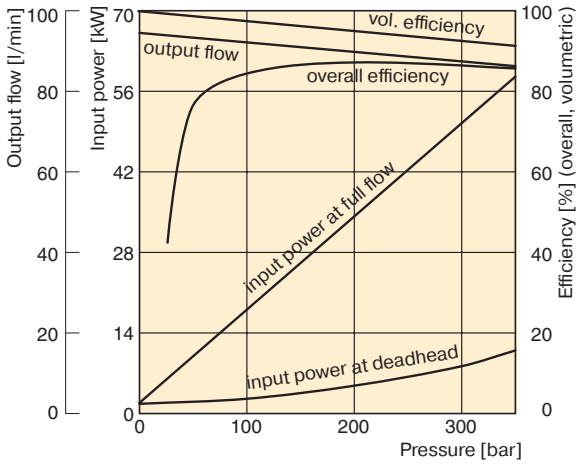

PV080

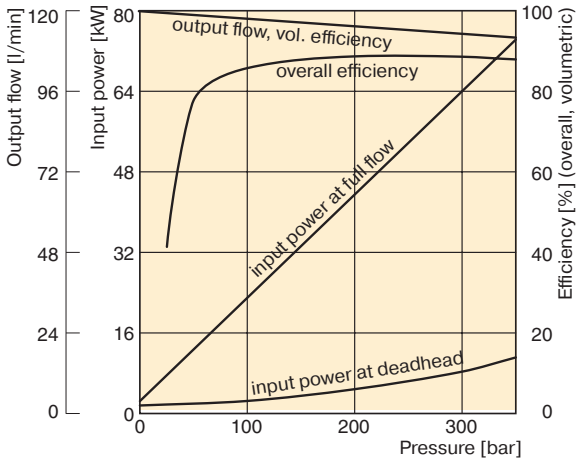

PV092

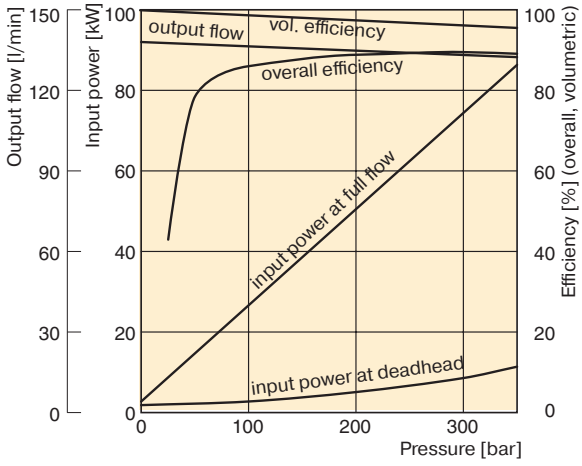

Efficiency and case drain flows PV063, PV080, PV092

The efficiency and power graphs are measured at an input speed of n = 1500 rpm, a temperature of 50 °C and a fluid viscosity of 30 mm^2/s.

Case drain flow and compensator control flow leave via the drain port of the pump. To the values shown are to be added 1 to 1.2 l/min, if at pilot operated compensators the control flow of the pressure pilot valve also goes through the pump.

Please note: The values shown below are only valid for static operation. Under dynamic conditions and at rapid compensation of the pump the volume displaced by the servo piston also leaves the case drain port. This dynamic control flow can reach up to 80 l/min! Therefore the case drain line is to lead to the reservoir at full size and without restrictions as short and direct as possible.

Case drain flows PV063-092

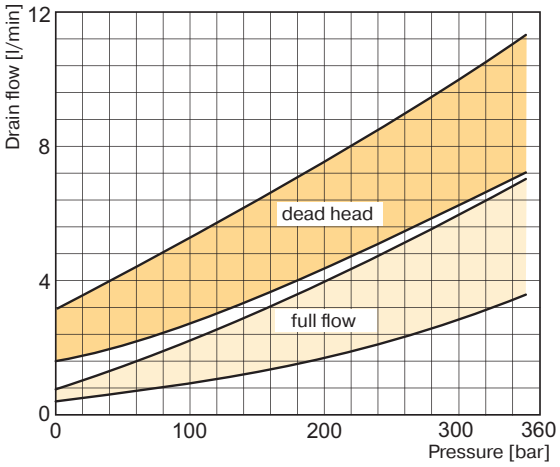

Parker Hannifin Manufacturing Germany GmbH & Co. KG
Pump & Motor Division Europe
Chemnitz, Germany

Tel: +45 63 12 83 00 | Email: ps@hymatik.com | www.hymatik.com | Hvidkaervej 27a, DK-5250 Odense SV, Denmark

Efficiency, power consumption

PV140

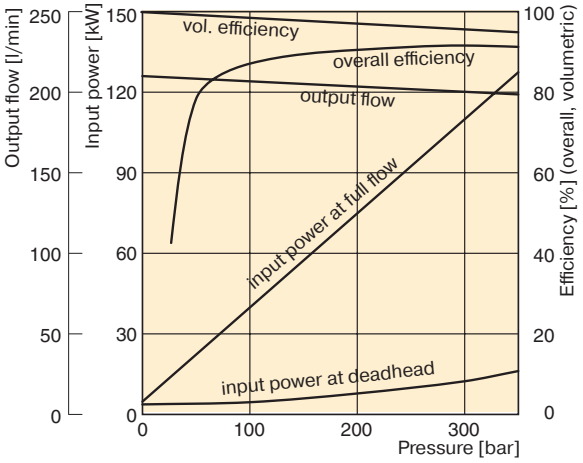

PV180

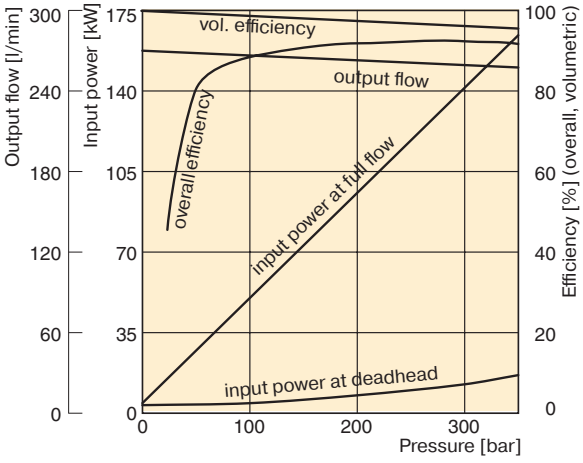

Efficiency and case drain flows PV140, PV180

The efficiency and power graphs are measured at an input speed of n = 1500 rpm, a temperature of 50 °C and a fluid viscosity of 30 mm^2/s.

Case drain flow and compensator control flow leave via the drain port of the pump. To the values shown are to be added 1 to 1.2 l/min, if at pilot operated compensators the control flow of the pressure pilot valve also goes through the pump.

Please note: The values shown below are only valid for static operation. Under dynamic conditions and at rapid compensation of the pump the volume displaced by the servo piston also leaves the case drain port. This dynamic control flow can reach up to 120 l/min! Therefore the case drain line is to lead to the reservoir at full size and without restrictions as short and direct as possible.

Case drain flows PV140-180

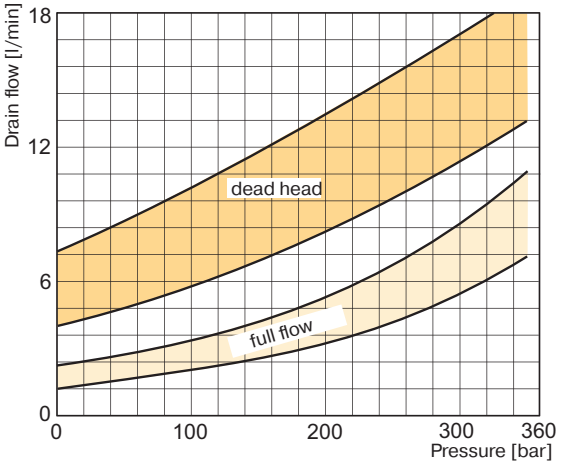

Parker Hannifin Manufacturing Germany GmbH & Co. KG
Pump & Motor Division Europe
Chemnitz, Germany

Tel: +45 63 12 83 00 | Email: ps@hymatik.com | www.hymatik.com | Hvidkaervej 27a, DK-5250 Odense SV, Denmark

Efficiency, power consumption PV270

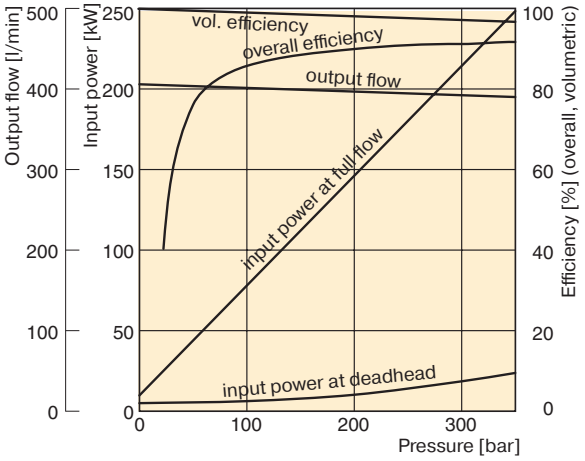

Case drain flows PV270

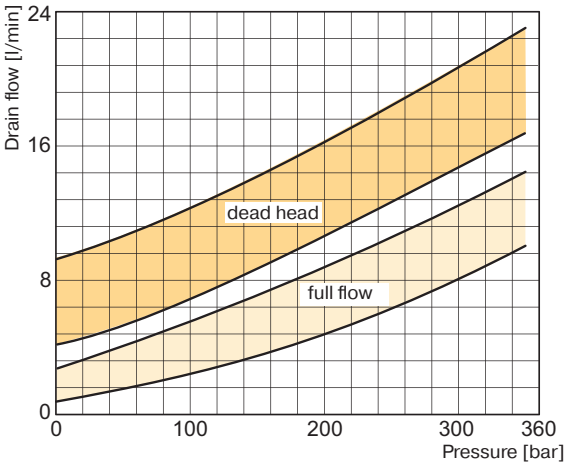

Efficiency and case drain flows PV270

The efficiency and power graphs are measured at an input speed of n = 1500 rpm, a temperature of 50 °C and a fluid viscosity of 30 mm^2/s.

Case drain flow and compensator control flow leave via the drain port of the pump. To the values shown are to be added 1 to 1.2 l/min, if at pilot operated compensators the control flow of the pressure pilot valve also goes through the pump.

Please note: The values shown below are only valid for static operation. Under dynamic conditions and at rapid compensation of the pump the volume displaced by the servo piston also leaves the case drain port. This dynamic control flow can reach up to 120 l/min! Therefore the case drain line is to lead to the reservoir at full size and without restrictions as short and direct as possible.

Parker Hannifin Manufacturing Germany GmbH & Co. KG
Pump & Motor Division Europe
Chemnitz, Germany

Tel: +45 63 12 83 00 | Email: ps@hymatik.com | www.hymatik.com | Hvidkaervej 27a, DK-5250 Odense SV, Denmark

Typical inlet characteristics vs. speed at various percentage displacements Inlet characteristics PV360

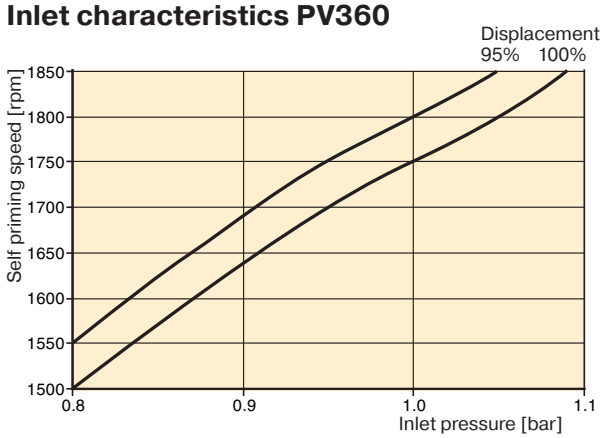

Typical drive power at full displacement Input power – full stroke PV360

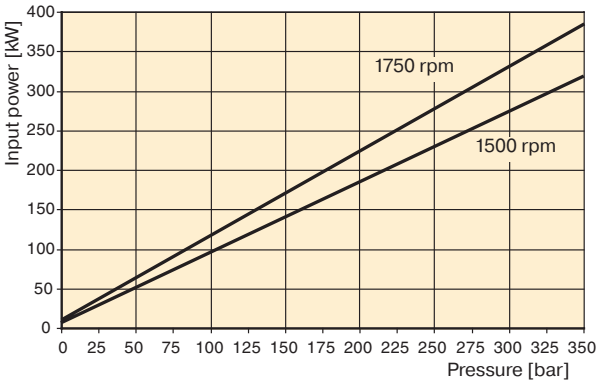

Typical efficiency at full displacement and 1500 rpm PV360

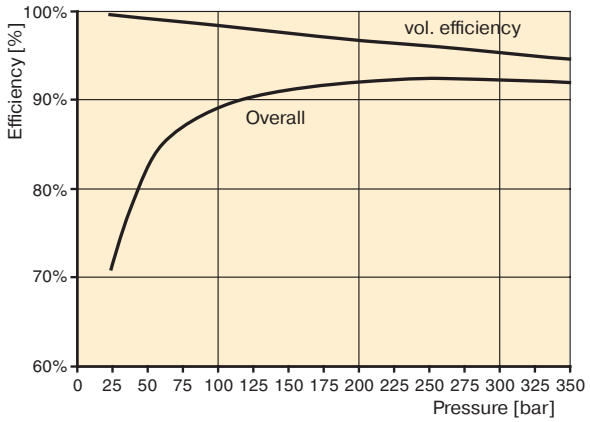

Typical compensated power Input power – zero stroke PV360

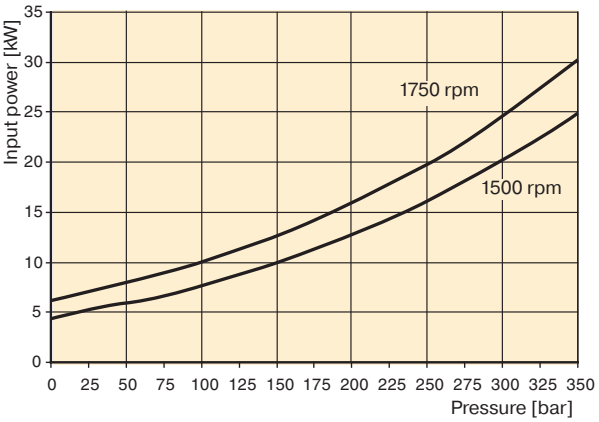

Case drain flows PV360

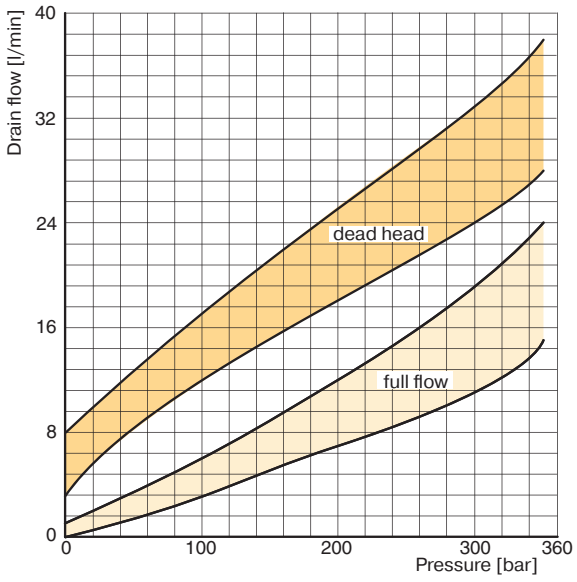

The curves show typical characteristics measured under following conditions:
Fluid: Mineral oil ISO VG 22 at 32 °C
Inlet pressure 1,0 bar (absolute), measured at inlet port.

Parker Hannifin Manufacturing Germany GmbH & Co. KG
Pump & Motor Division Europe
Chemnitz, Germany

Tel: +45 63 12 83 00 | Email: ps@hymatik.com | www.hymatik.com | Hvidkaervej 27a, DK-5250 Odense SV, Denmark

PV	AC								
For PV pump series	Accessories for controls	Function	Mounting bolts	Threads	Seals	Adjustment	Solenoid	Solenoid acces-sories	Nominal pressure

Code	Function
1P	Max. pressure relief
1E	1 pressure, electrical unloading stand by default
2P	2 pressures, electrical selection
2E	2 pressures + stand by electrical selection low pressure default
2M	2 pressures + stand by electrical selection stand by default

Code	Threads
M	Metric
-	without bolts

Code	Seals
N	NBR
V	FPM

Code	Mounting bolts
C	For single controls
S	Without bolts
M	For code UD*/MT*

Code	Adjustment
S	Spindle with lock nut
L	DIN lock [1]

1) only for 1P & 2P

Code	Solenoid voltage
omit	For function 1P
Y	110V/50Hz – 120V/60Hz
T	220V/50Hz – 240V/60Hz
J	24V DC

Code	Solenoid accessories
omit	For function 1P
W	DIN plug socket without plug

Code	Nominal pressure
35	350 bar
42	420 bar

Warning: Risk of damaging bolt holes! Prior design series will need UNC bolts for pumps with threadcode "3".

Dimensions

PVAC1P*

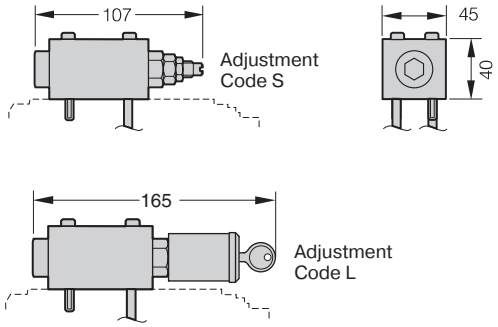

PVAC1E*

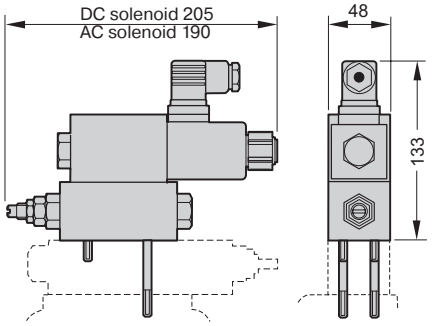

PVAC2P*

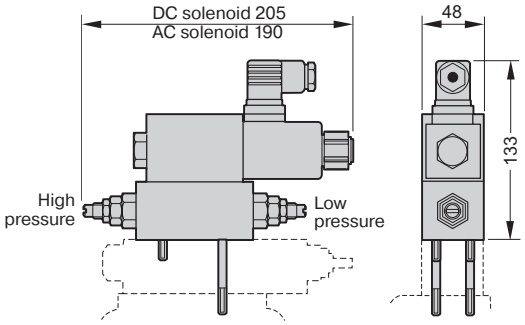

PVAC2M*/PVAC2E*

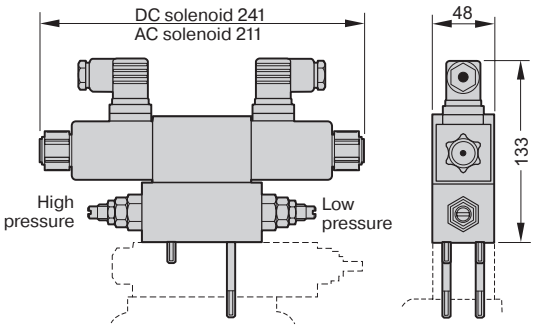

Parker Hannifin Manufacturing Germany GmbH & Co. KG
Pump & Motor Division Europe
Chemnitz, Germany

Tel: +45 63 12 83 00 | Email: ps@hymatik.com | www.hymatik.com | Hvidkaervej 27a, DK-5250 Odense SV, Denmark

Schematics PVAC1P*

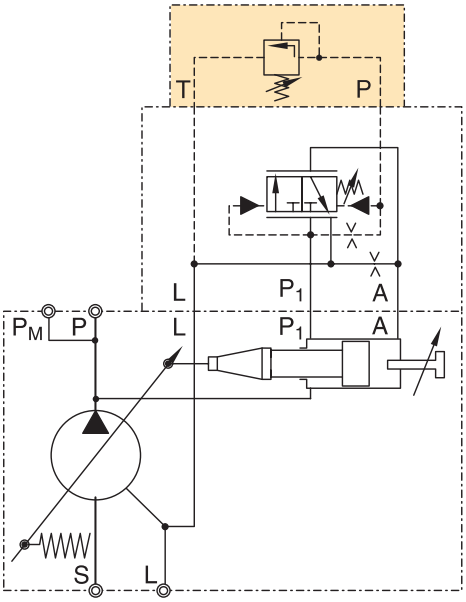

Schematics PVAC1E*

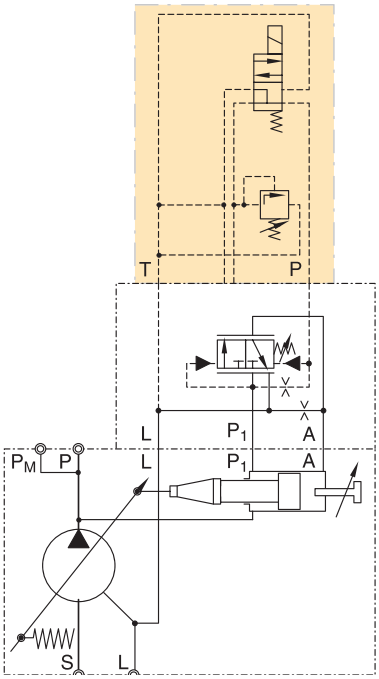

Schematics PVAC2P*

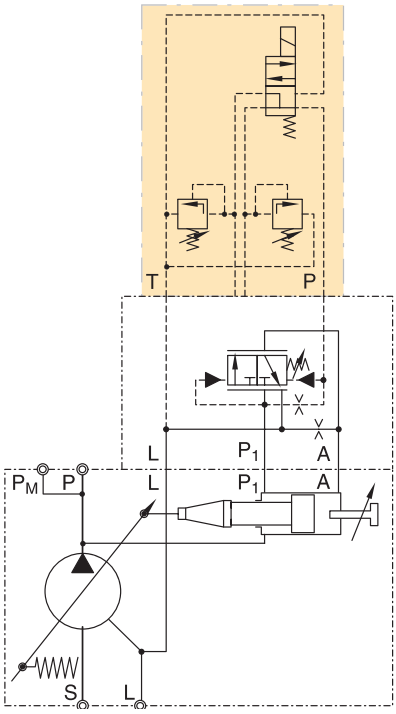

Schematics PVAC2M*/PVAC2E*

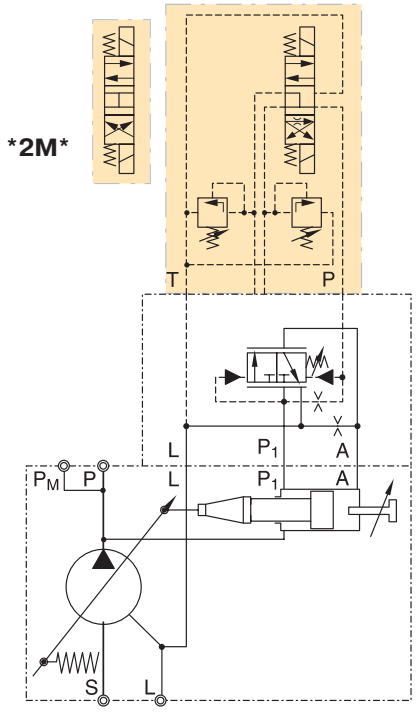

Parker Hannifin Manufacturing Germany GmbH & Co. KG
Pump & Motor Division Europe
Chemnitz, Germany

Tel: +45 63 12 83 00 | Email: ps@hymatik.com | www.hymatik.com | Hvidkaervej 27a, DK-5250 Odense SV, Denmark

Proportional pressure relief valve PVACRE*

Function

When the pressure in port P exeeds the pressure setting at the solenoid, the poppet opens to port T and limits the pressure in port P to the adjusted level.

The optimum performance can be achieved in combination with the digital amplifier module PCD00A-400 (see catalogue HY11-3500 for reference).

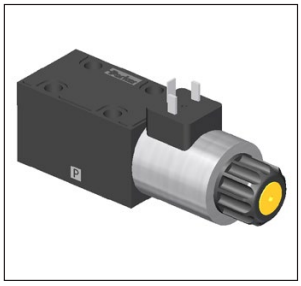

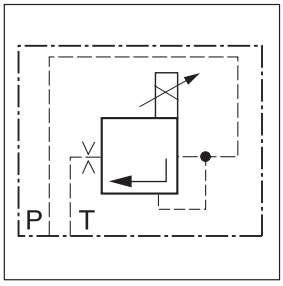

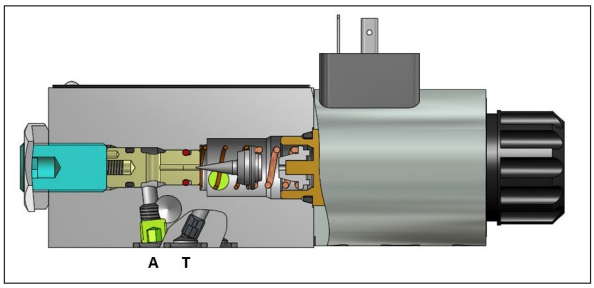

Technical data

General		
Nominal size		DIN NG06 / CETOP03 / NFPA D03
Mounting position		as desired, horizontal mounting preferred
Ambient temperature	[°C]	-20 ... +70
Weight	[kg]	1.8
Hydraulic		
Max. operating pressure	[bar]	Port P up to 420; port T depressurized
Pressure stages	[bar]	350, 420
Fluid		Hydraulic oil as per DIN 51524 ... 525
Viscosity, recommended permitted	[cSt]/ [mm²/s] [cSt]/ [mm²/s]	30 ... 80 12 ... 380
Fluid temperature	[°C]	-20 ... +60
Filtration		ISO 4406 (1999), 18/16/13
Linearity	[%]	±4
Repeatability	[%]	±2
Hysteresis	[%]	±4.5 of p_{max}
Electrical		
Duty ratio	[%]	100 ED
Protection class		IP 65 in accordance with EN 60529 (plugged and mounted)
Nominal voltage	[V]	12 (2.2 A for nominal pressure)
Coil resistance	[Ohm]	4.4 at 20°C
Solenoid connection		Connector as per EN 175301-803
Power amplifier, recommended		PCD00A-400 (open loop – NO sensor), PWDXXA-400 (closed loop – with pressure sensor)

Tel: +45 63 12 83 00 | Email: ps@hymatik.com | www.hymatik.com | Hvidkaervej 27a, DK-5250 Odense SV, Denmark

Ordering code proportional pressure relief valve

PV	AC	RE				K	
Pump series PV	Accessories for controller	Prop. pressure valve	Mounting bolts	Thread option	Seal	12VDC	Nominal pressure

Code	Nominal pressure
35	350 bar
42	420 bar

Code	Mounting bolts/ ports
C	For single controller
S	Without bolts
M	For code UD*/MT* design series 45 – 47

Code	Thread option
M	Metric
-	if less bolts

Code	Seal
N	NBR
V	FPM

Warning:
Risk of damaging bolt holes! Prior design series will need UNC bolts for pumps with threadcode "3".

Schematic PVACRE*

Example for PVACRE* mounted

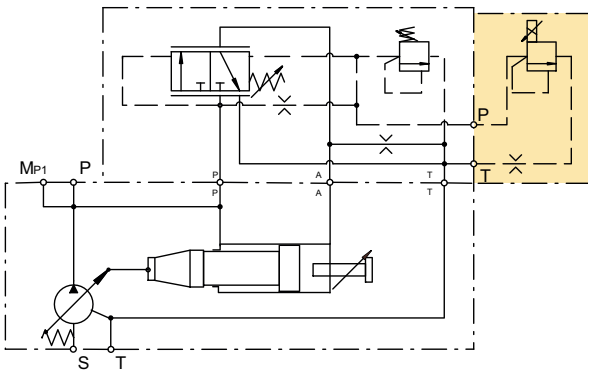

Dimensions PVACRE*

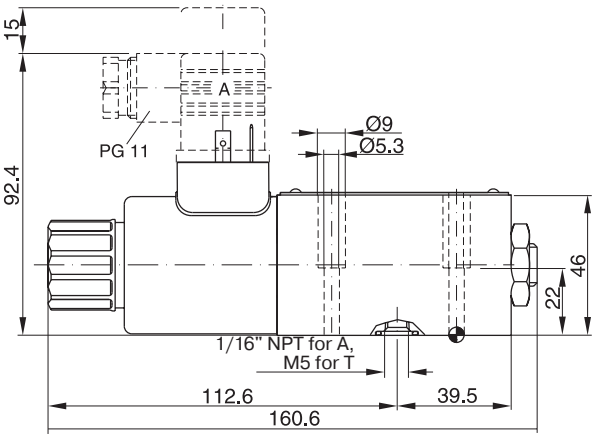

Parker Hannifin Manufacturing Germany GmbH & Co. KG
Pump & Motor Division Europe
Chemnitz, Germany

Tel: +45 63 12 83 00 | Email: ps@hymatik.com | www.hymatik.com | Hvidkaervej 27a, DK-5250 Odense SV, Denmark

PV016-028, metric version

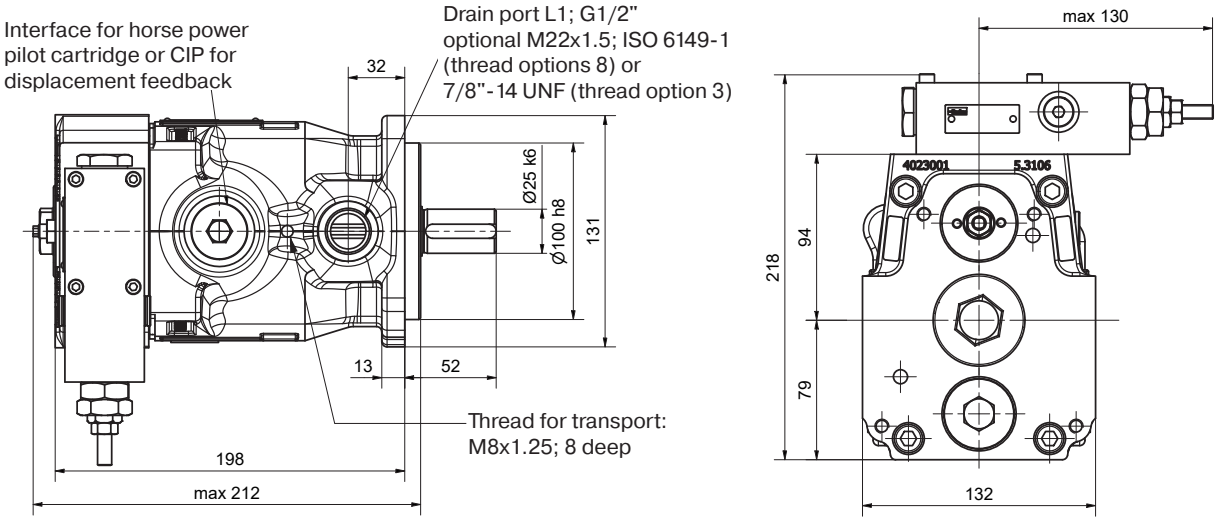

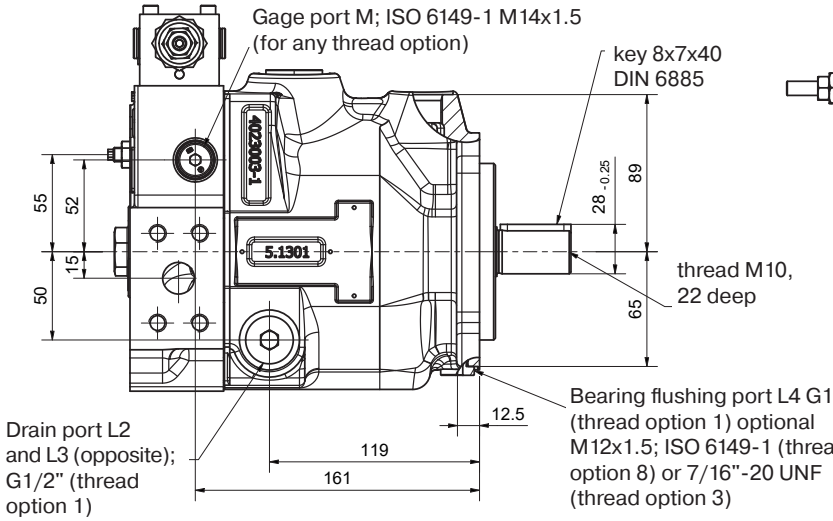

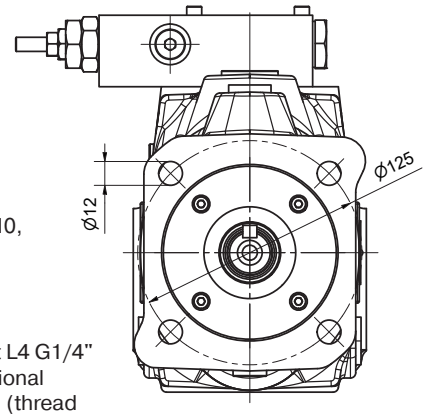

The pump shown above has **Mounting option K** and **through drive variation T** (prepared for through drive)

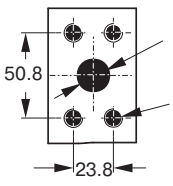

OUTLET for metric and SAE version:
flage acc. ISO 6162
DN19; PN400

4xM10, 18 deep
optional 3/8"-16UNC-2B
(thread options 3)

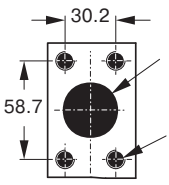

INLET for metric and SAE version:
flage acc. ISO 6162
DN32; PN250

4xM10, 18 deep
optional 7/16"-14UNC-2B
(thread options 3)

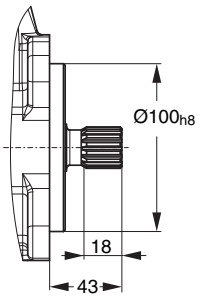

Mounting optional L
splined shaft W25x1.5x15x8f
DIN 5480

Shown is a clockwise rotating pump with standard pressure compensator. Counter clockwise rotating pumps have inlet, outlet and gage port reversed.

Parker Hannifin Manufacturing Germany GmbH & Co. KG
Pump & Motor Division Europe
Chemnitz, Germany

Tel: +45 63 12 83 00 | Email: ps@hymatik.com | www.hymatik.com | Hvidkaervej 27a, DK-5250 Odense SV, Denmark

PV016-028, SAE version

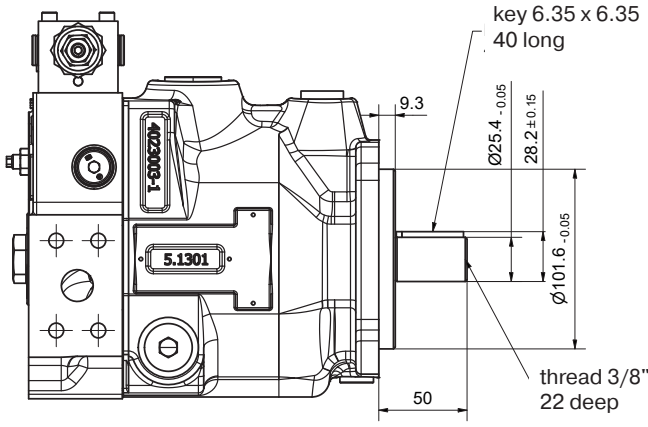

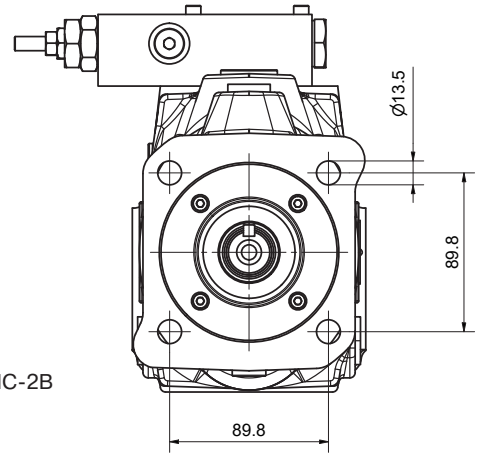

Shown above is
Mounting option D

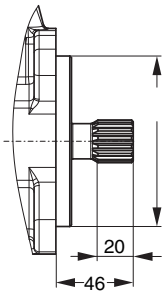

Mounting option E
Splined shaft 15T-16/32 DP,
flat root, side fit ANSI B92.1

Variation with through drive

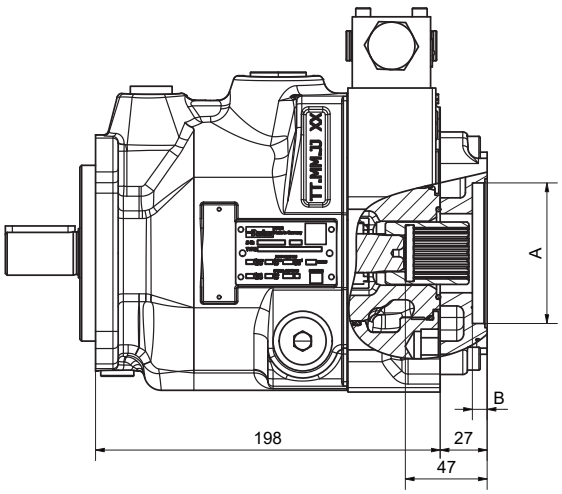

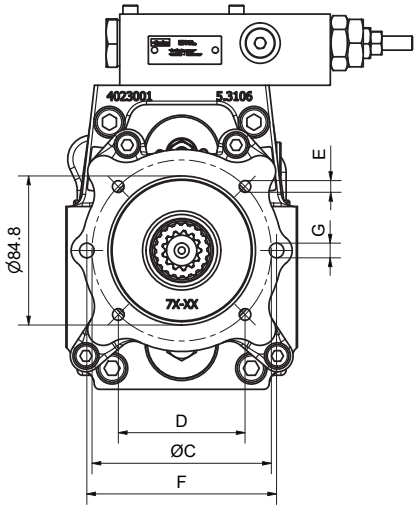

Through drive adaptors are available with the following dimensions								
Drawing Dimension / Through drive option	A	B	C	D	E	F	G	Remark
A	82.55	8	-	-	-	106	M10	SAE A 2-Bolt
B	101.6	10.5	127	89.8	M12	-	-	SAE B 4-Bolt
J	100	10.5	125	88.4	M10	-	-	4-Bolt

Parker Hannifin Manufacturing Germany GmbH & Co. KG
Pump & Motor Division Europe
Chemnitz, Germany

Tel: +45 63 12 83 00 | Email: ps@hymatik.com | www.hymatik.com | Hvidkaervej 27a, DK-5250 Odense SV, Denmark

PV032-046, metric version

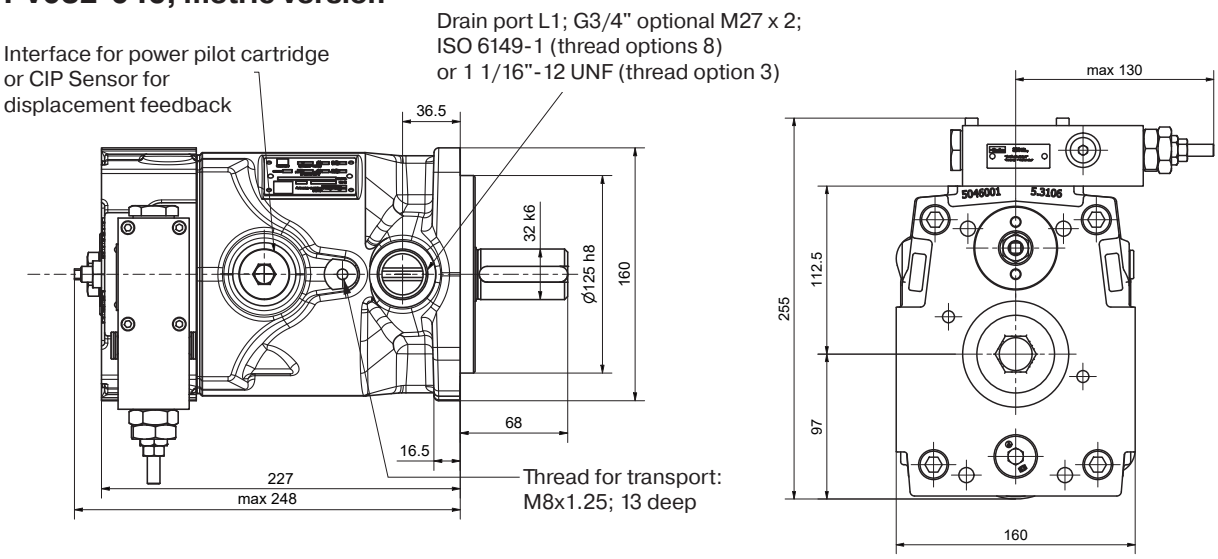

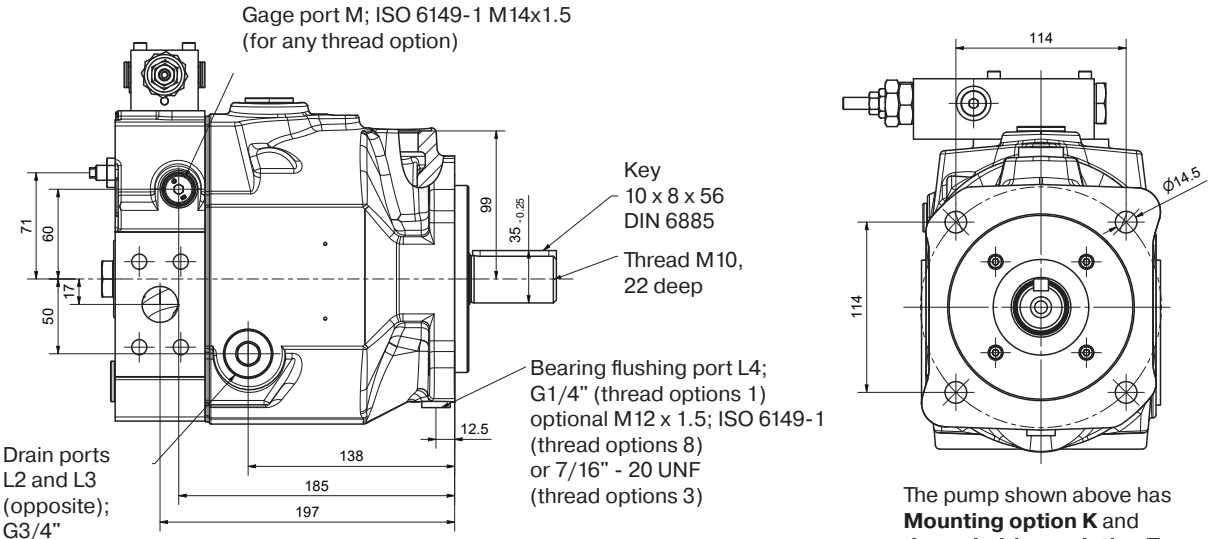

The pump shown above has **Mounting option K** and **through drive variation T** (prepared for through drive)

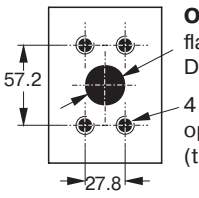

OUTLET for metric and SAE version:
flange acc. ISO 6162
DN25; PN400

4 x M12, 18 deep
optional 7/16"-14 UNC-2B
(thread options 3)

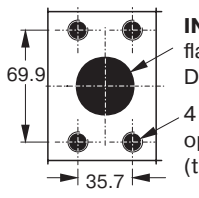

INLET for metric and SAE version:
flange acc. ISO 6162
DN38; PN200

4 x M12, 18 deep
optional 1/2"-13 UNC-2B
(thread options 3)

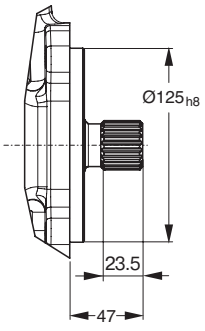

Mounting optional L
splined shaft W32x1.5x20x8f
DIN 5480

Shown is a clockwise rotating pump with standard pressure compensator. Counter clockwise rotating pumps have inlet, outlet and gage port reversed.

Parker Hannifin Manufacturing Germany GmbH & Co. KG
Pump & Motor Division Europe
Chemnitz, Germany

Tel: +45 63 12 83 00 | Email: ps@hymatik.com | www.hymatik.com | Hvidkaervej 27a, DK-5250 Odense SV, Denmark

PV032-046, SAE version

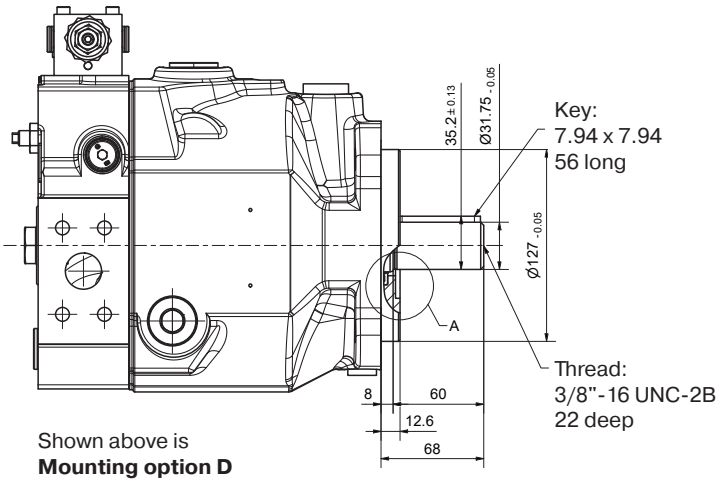

Shown above is
Mounting option D

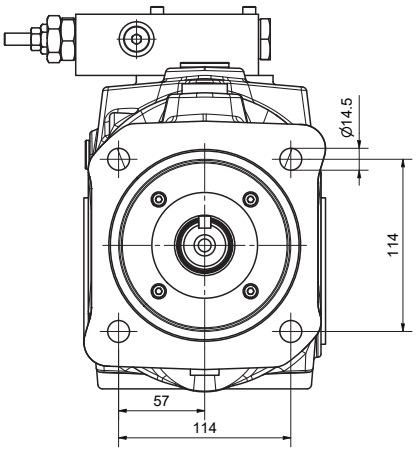

Variation with through drive

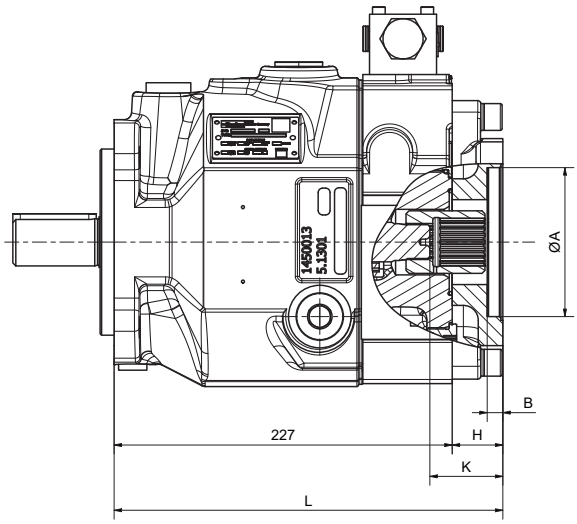

At threads options 3 and 7 the dimensions E and G are UNC - 2B threads.

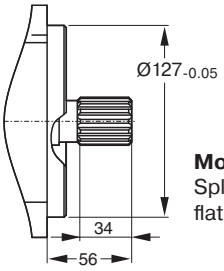

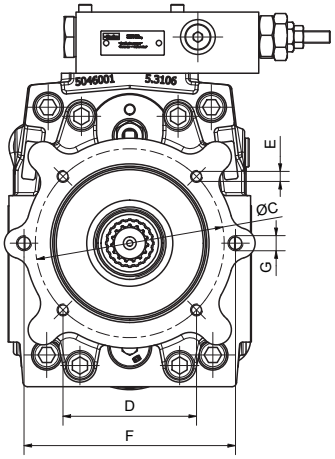

Mounting option E
Splined shaft 14T-12/24 DP,
flat root, side fit ANSI B92.1

Through drive adaptors are available with the following dimensions											
Drawing Dimension / Through drive option	A	B	C	D	E	F	G	H	K	L	Remark
A	82.55	8	-	-	-	106	M10	34	48	261	SAE A 2-Bolt
B	101.6	11	127	89.8	M12	146	M12	34	48	261	SAE B 2/4-Bolt
C	127	13.5	162	114.6	M12	-	-	49	63	276	SAE C 4-Bolt
J	100	10.5	125	88.4	M10	140	M12	34	48	261	2/4-Bolt
K	125	10.5	160	113.1	M12	-	-	34	48	261	4-Bolt

Parker Hannifin Manufacturing Germany GmbH & Co. KG
Pump & Motor Division Europe
Chemnitz, Germany

Tel: +45 63 12 83 00 | Email: ps@hymatik.com | www.hymatik.com | Hvidkaervej 27a, DK-5250 Odense SV, Denmark

PV 063-092, metric version

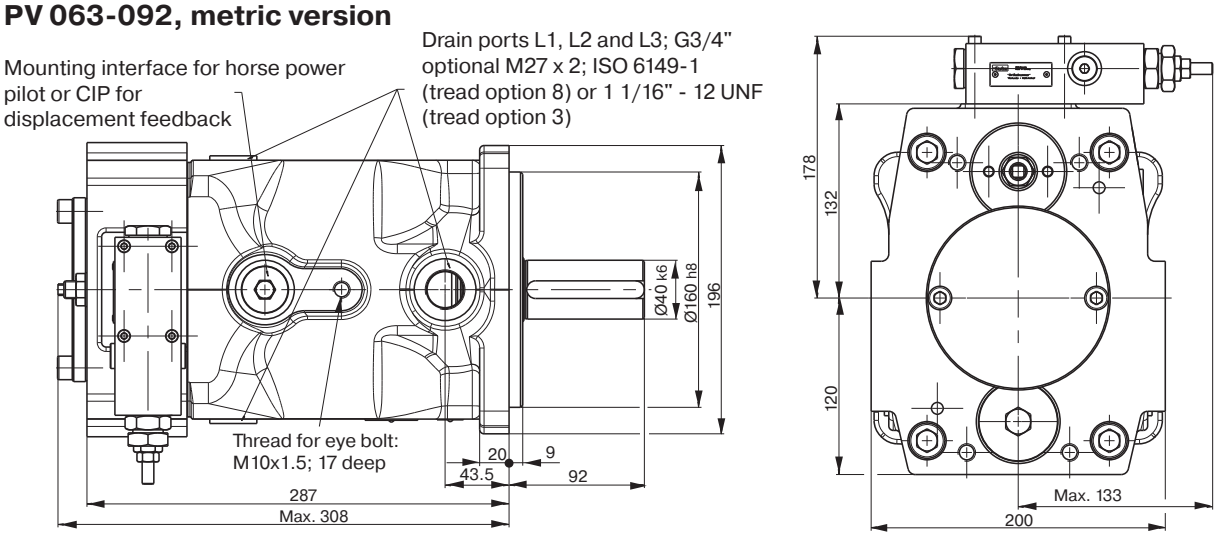

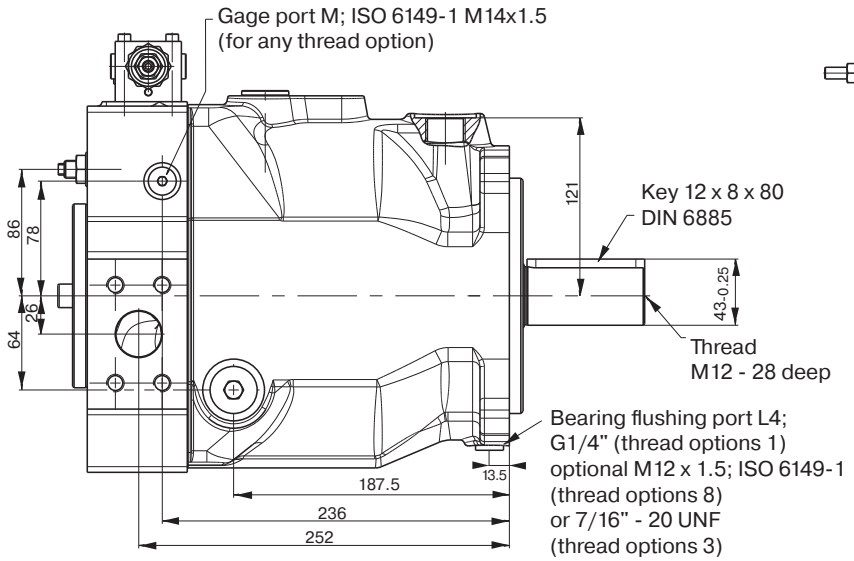

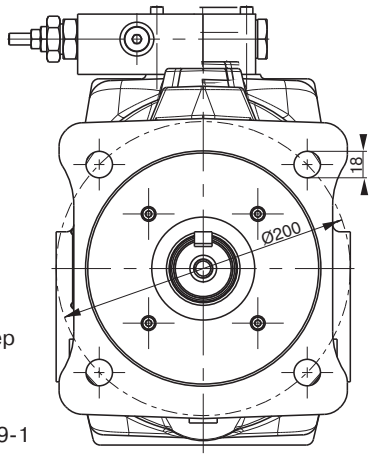

The pump shown above has
Mounting option K
and **through drive variation T**
(prepared for through drive)

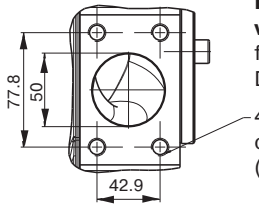

INLET for metric and SAE version:
flange according ISO 6162
DN 51; PN 200 bar

4 x M12, 20 deep
optional 1/2" - 13 UNC - 2B
(thread options 3)

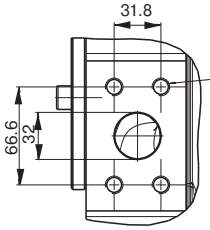

OUTLET for metric and SAE version:
flange according ISO 6162
DN 32; PN 400 bar

4 x M12, 20 deep
optional 1/2" - 13 UNC - 2B
(thread options 3)
or 4 x M14, 20 deep
(thread options 4)

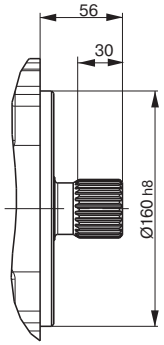

Mounting option L,
splined shaft
W40 x 1.5 x 25 x 8f DIN 5480

Shown is a clockwise rotating pump with standard pressure compensator. Counter clockwise rotating pumps have inlet, outlet and gage port reversed.

Parker Hannifin Manufacturing Germany GmbH & Co. KG
Pump & Motor Division Europe
Chemnitz, Germany

Tel: +45 63 12 83 00 | Email: ps@hymatik.com | www.hymatik.com | Hvidkaervej 27a, DK-5250 Odense SV, Denmark

PV 063-092 SAE Version

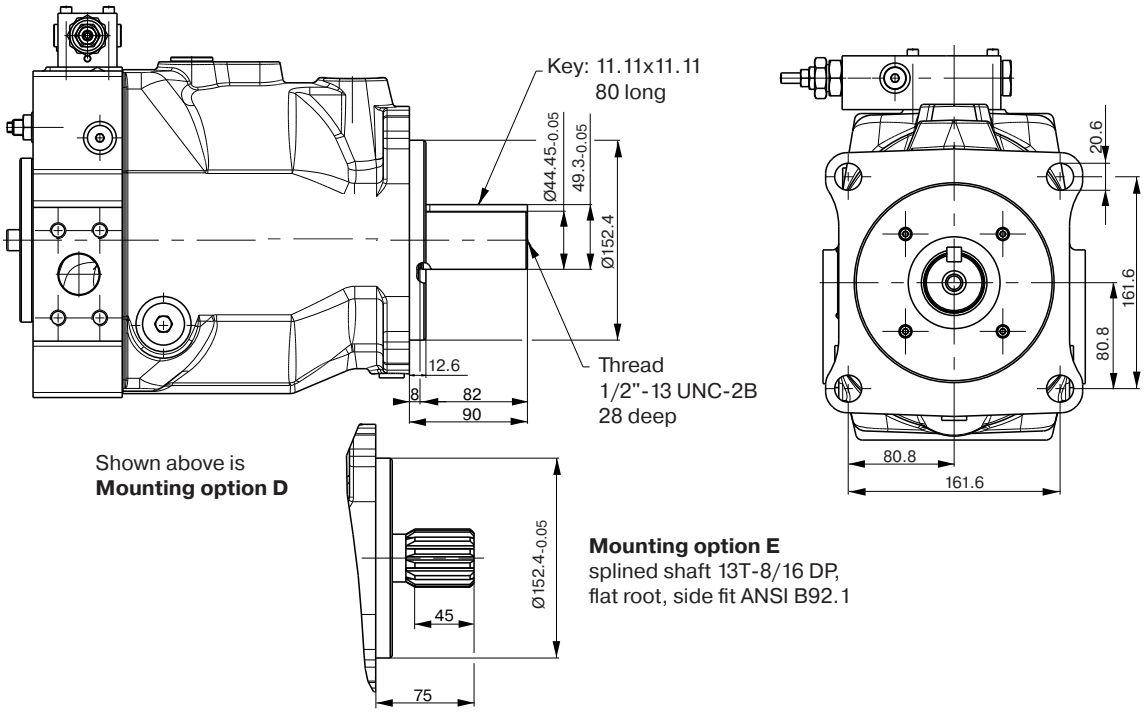

Variation with through drive

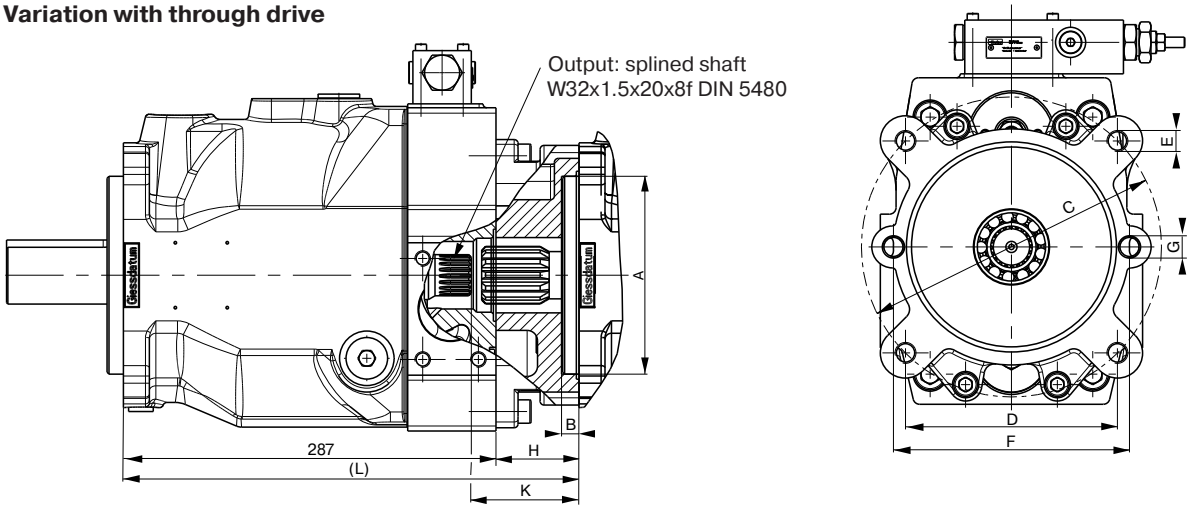

Through drive adaptors are available with the following dimensions

Drawing Dimension / Through drive option	A	B	C	D	E	F	G	H	K	L	Remark
A	82.55	8	-	-	-	106	M10	39	58	326	SAE A 2-Bolt
B	101.6	11	127	89.8	M12	146	M12	39	58	326	SAE B 2/4-Bolt
C	127	13.5	162	114.6	M12	181	M16	39	58	326	SAE C 2/4-Bolt
D	152.4	13.5	228.5	161.6	M16	-	-	64	83	351	SAE D 4-Bolt
J	100	10.5	125	88.4	M10	140	M12	39	58	326	2/4-Bolt
K	125	10.5	160	113.1	M12	180	M16	39	58	326	2/4-Bolt
L	160	13.5	200	141.4	M16	-	-	39	58	326	4-Bolt

Parker Hannifin Manufacturing Germany GmbH & Co. KG
Pump & Motor Division Europe
Chemnitz, Germany

Tel: +45 63 12 83 00 | Email: ps@hymatik.com | www.hymatik.com | Hvidkaervej 27a, DK-5250 Odense SV, Denmark

PV 140-180, metric version

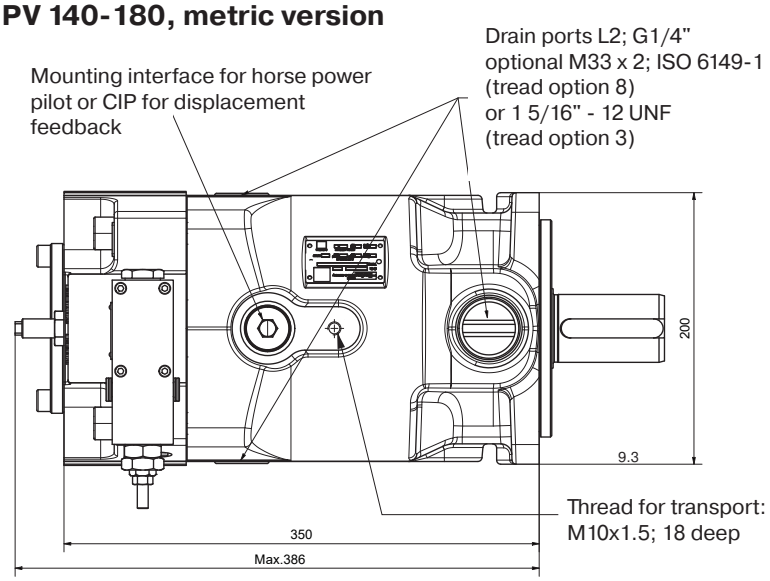

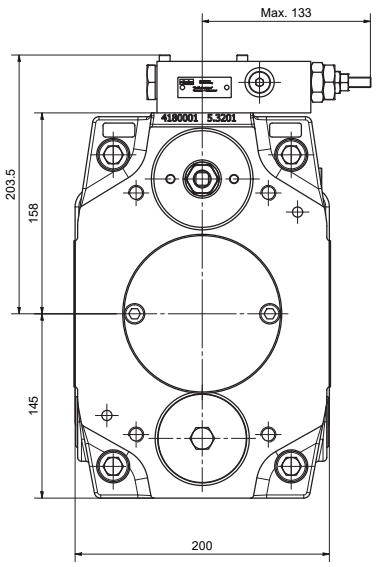

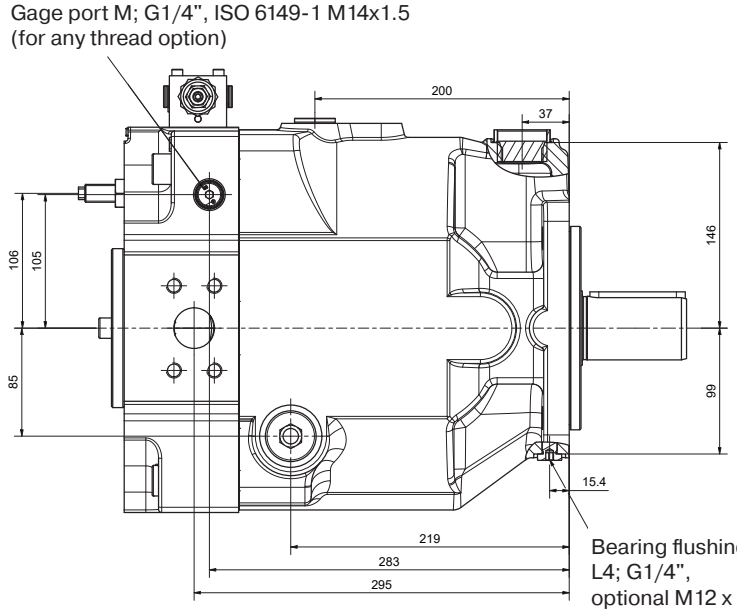

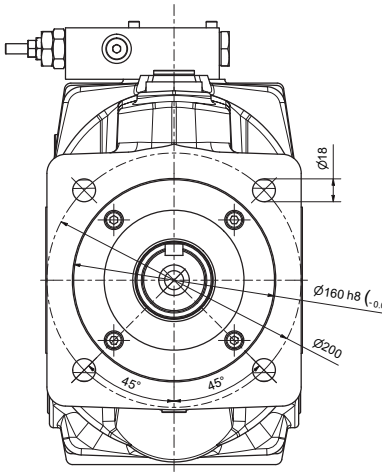

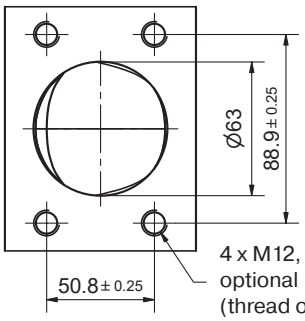

INLET for metric and SAE version:
flange according ISO 6162
DN 64; PN 160 bar

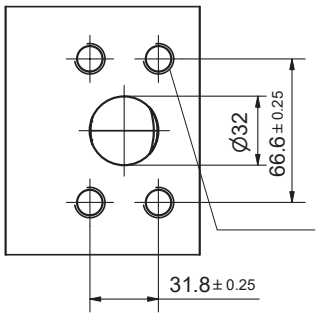

OUTLET for metric and SAE version:
flange according ISO 6162
DN 32; PN 400 bar

Parker Hannifin Manufacturing Germany GmbH & Co. KG
Pump & Motor Division Europe
Chemnitz, Germany

Tel: +45 63 12 83 00 | Email: ps@hymatik.com | www.hymatik.com | Hvidkaervej 27a, DK-5250 Odense SV, Denmark

PV 140-180 SAE Version

Flange according DIN ISO 3019-1 SAE
for mounting interface code D, E, F and G

Shown are clockwise rotating pumps. Counter clockwise rotating pumps have inlet, outlet and gage port reversed.

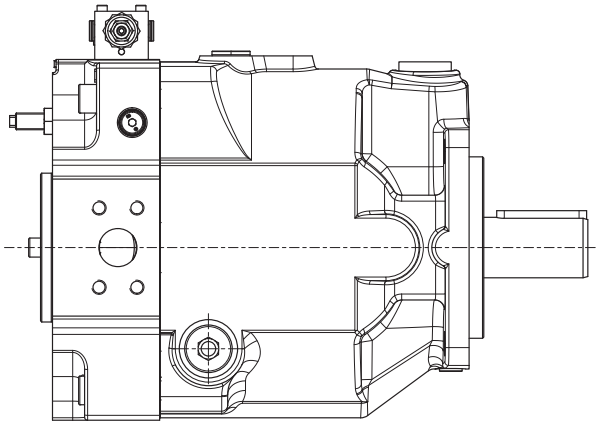

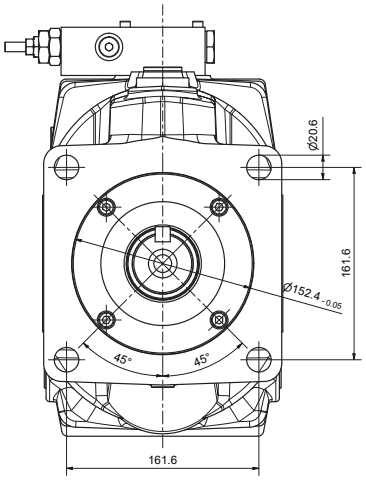

Variation with through drive

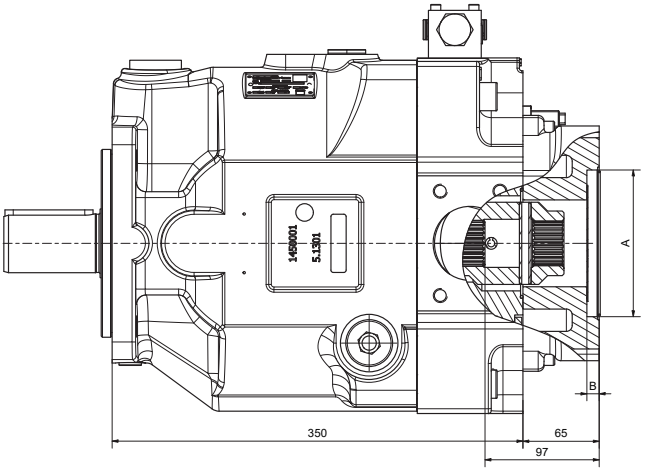

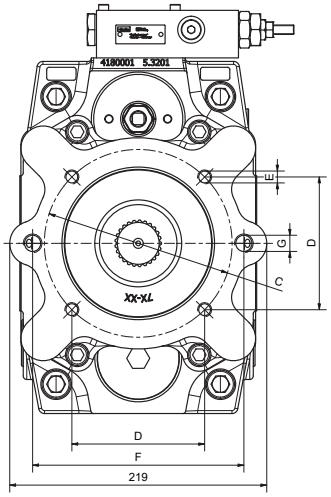

Through drive adaptors are available with the following dimensions								
Drawing Dimension / Through drive option	A	B	C	D	E	F	G	Remark
A	82.55	8	-	-	-	106	M10	SAE A 2-Bolt
B	101.6	11	127	89.8	M12	146	M12	SAE B 2/4-Bolt
C	127	13.5	162	114.6	M12	181	M16	SAE C 2/4-Bolt
D	152.4	13.5	228.5	161.6	M16	-	-	SAE D 4-Bolt
J	100	10.5	125	88.4	M10	140	M12	2/4-Bolt
K	125	10.5	160	113.1	M12	180	M16	2/4-Bolt
L	160	13.5	200	141.4	M16	-	-	4-Bolt

Parker Hannifin Manufacturing Germany GmbH & Co. KG
Pump & Motor Division Europe
Chemnitz, Germany

Tel: +45 63 12 83 00 | Email: ps@hymatik.com | www.hymatik.com | Hvidkaervej 27a, DK-5250 Odense SV, Denmark

PV 140-180 Mounting options

Mounting option K
shaft keyed metric

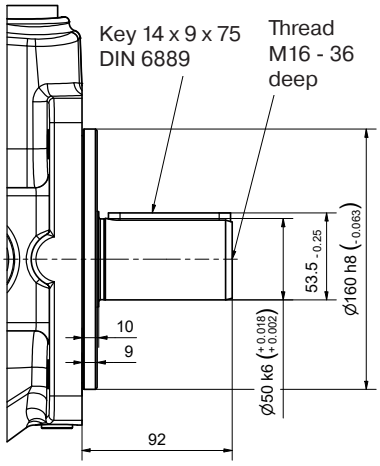

Mounting option D
shaft keyed SAE

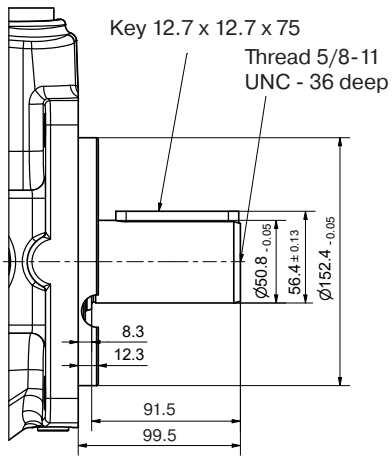

Mounting option F
shaft keyed SAE

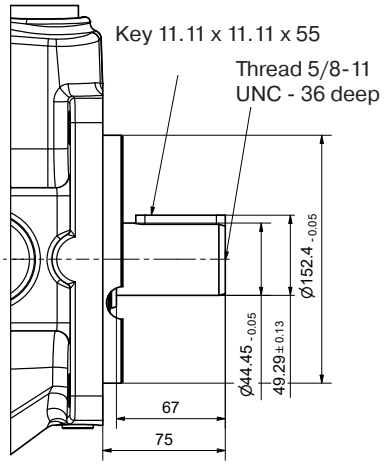

Mounting option L
shaft splined metric

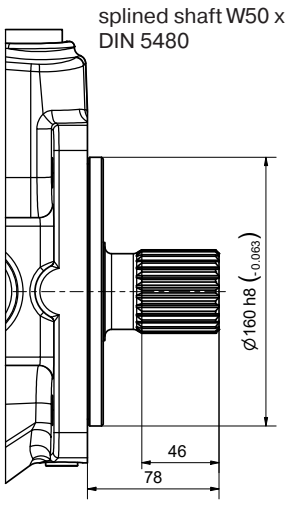

Mounting option E
shaft splined SAE

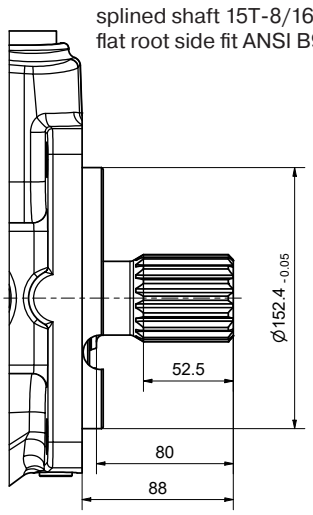

Mounting option G
shaft splined SAE

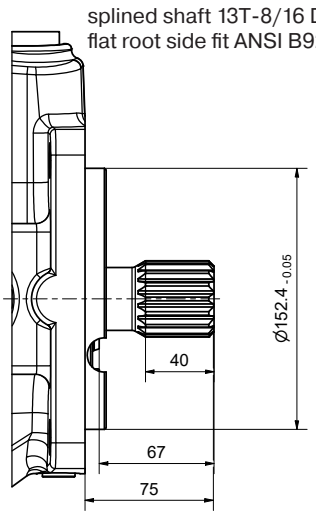

Parker Hannifin Manufacturing Germany GmbH & Co. KG
Pump & Motor Division Europe
Chemnitz, Germany

Tel: +45 63 12 83 00 | Email: ps@hymatik.com | www.hymatik.com | Hvidkaervej 27a, DK-5250 Odense SV, Denmark

PV 270, metric version

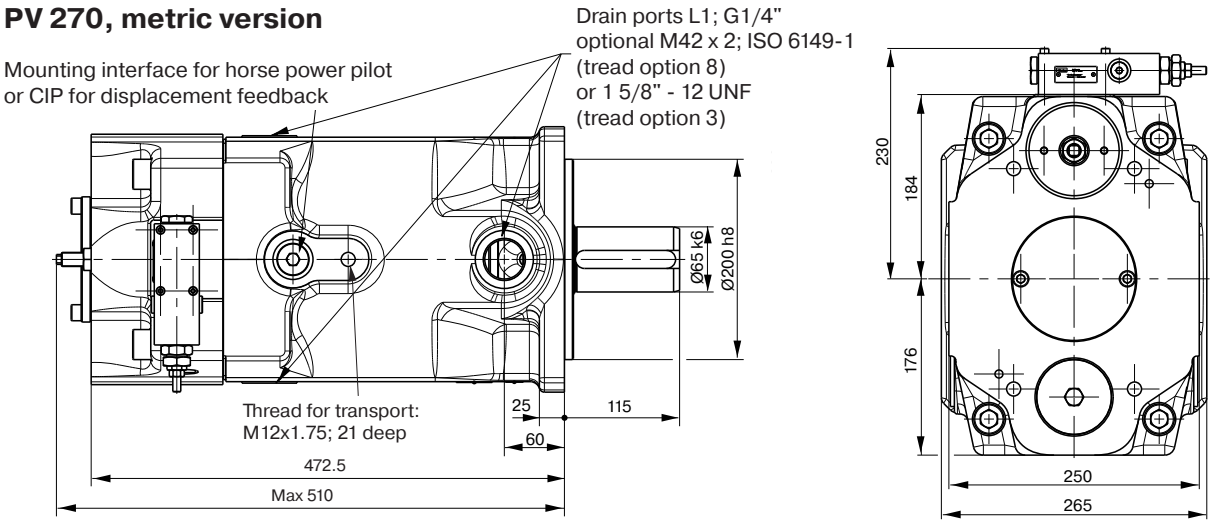

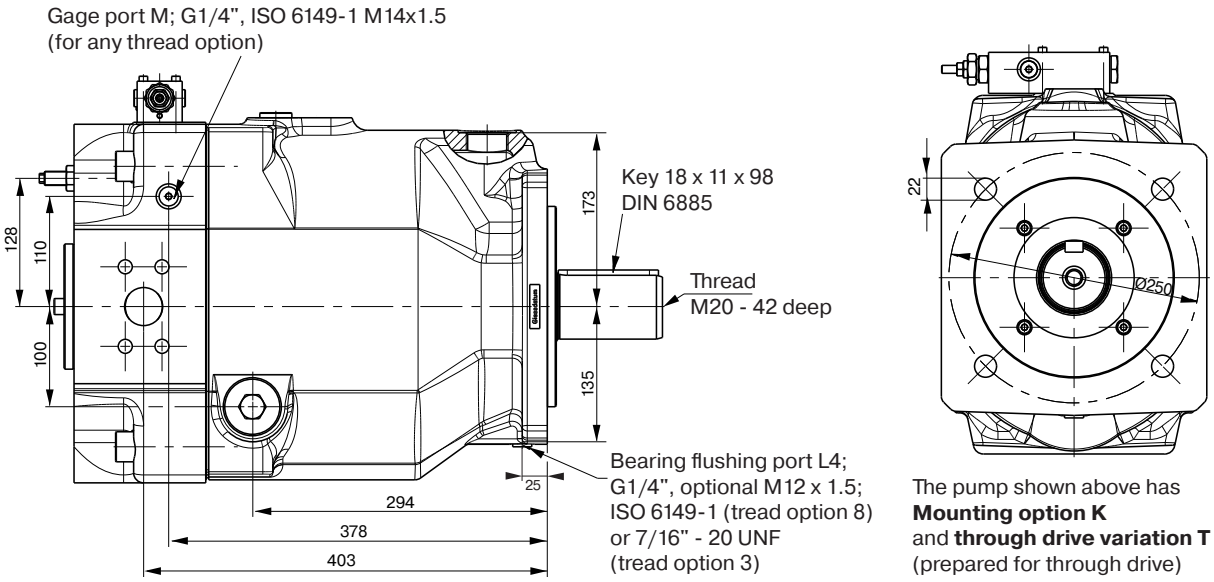

The pump shown above has
Mounting option K
and **through drive variation T**
(prepared for through drive)

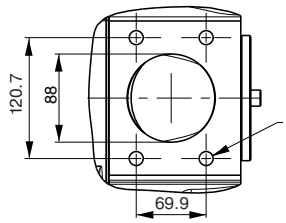

INLET for metric and SAE version:
flange according ISO 6162
DN 89; PN 35 bar
4 x M16, 30 deep
optional 5/8" - 11 UNC - 2B
(thread options 3)

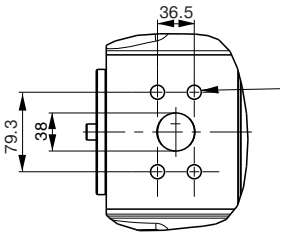

OUTLET for metric and SAE version:
flange according ISO 6162
DN 38; PN 400 bar
4 x M16, 30 deep
optional 5/8" - 11 UNC - 2B
(thread options 3)

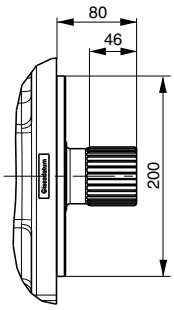

Mounting option L,
splined shaft
W60 x 2 x 28 x 9g DIN 5480

Shown is a clockwise rotating pump with standard pressure control. Counter clockwise rotating pump have inlet, outlet and gage port reversed.

Parker Hannifin Manufacturing Germany GmbH & Co. KG
Pump & Motor Division Europe
Chemnitz, Germany

Tel: +45 63 12 83 00 | Email: ps@hymatik.com | www.hymatik.com | Hvidkaervej 27a, DK-5250 Odense SV, Denmark

PV 270 SAE Version

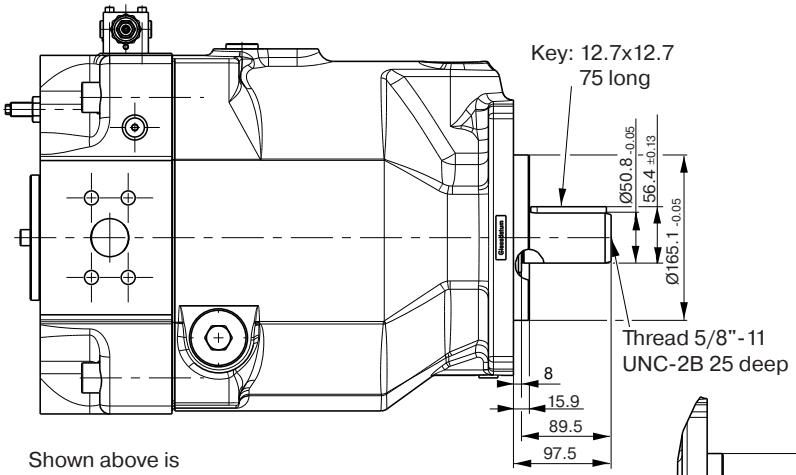

Shown above is
Mounting option D

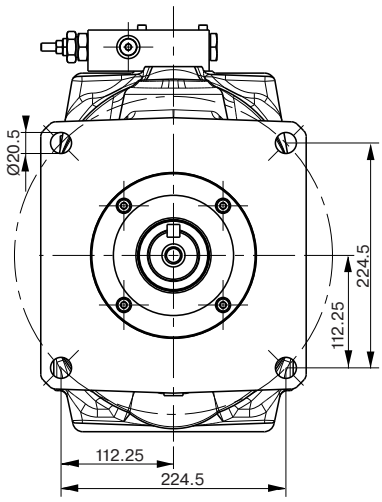

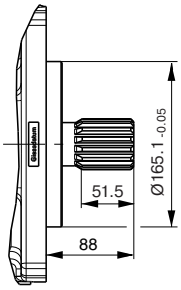

Mounting option E
splined shaft 15T-8/16 DP,
flat root, side fit ANSI B92.1

Variation with through drive

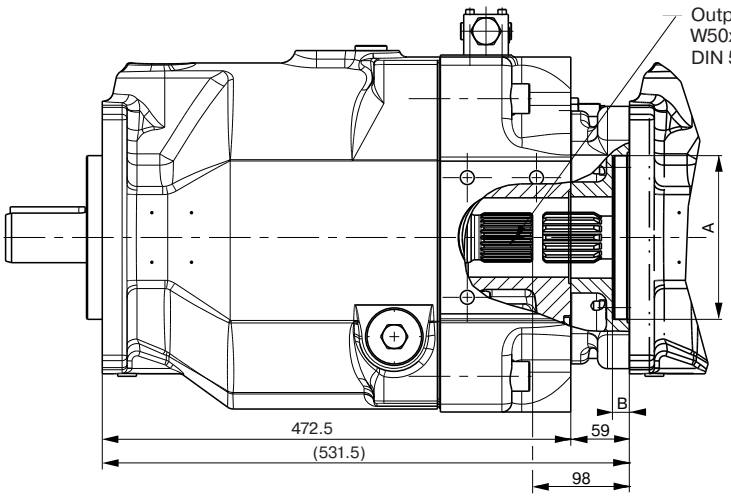

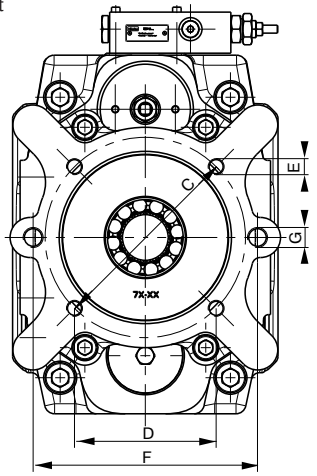

Through drive adaptors are available with the following dimensions								
Drawing Dimension / Through drive option	A	B	C	D	E	F	G	Remark
A	82.55	8	-	-	-	106	M10	SAE A 2-Bolt
B	101.6	11	127	89.8	M12	146	M12	SAE B 2/4-Bolt
C	127	13.5	162	114.6	M12	181	M16	SAE C 2/4-Bolt
D	152.4	13.5	228.5	161.6	M16	229	M16	SAE D 2/4-Bolt
E	165.1	17	317.5	224.5	M20	-	-	SAE E 4-Bolt
J	100	10.5	125	88.4	M10	140	M12	2/4-Bolt
K	125	10.5	160	113.1	M12	180	M16	2/4-Bolt
L	160	13.5	200	141.4	M16	224	M20	2/4-Bolt
M	200	13.5	250	176.8	M20	-	-	4-Bolt

Parker Hannifin Manufacturing Germany GmbH & Co. KG
Pump & Motor Division Europe
Chemnitz, Germany

Tel: +45 63 12 83 00 | Email: ps@hymatik.com | www.hymatik.com | Hvidkaervej 27a, DK-5250 Odense SV, Denmark

PV 360, metric version

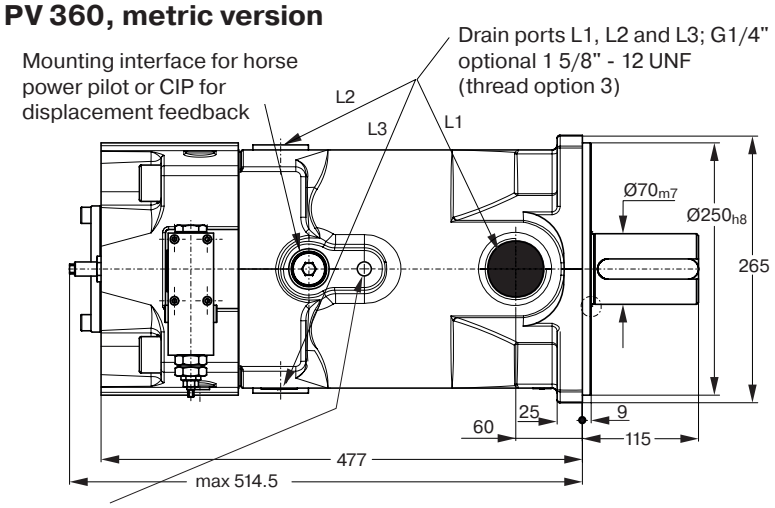

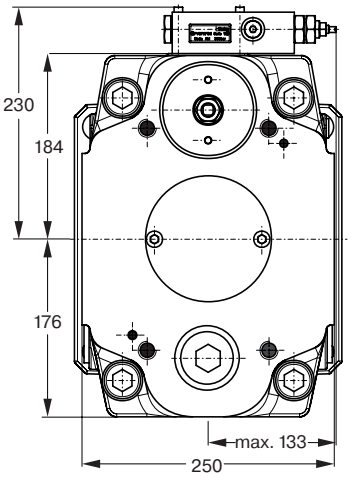

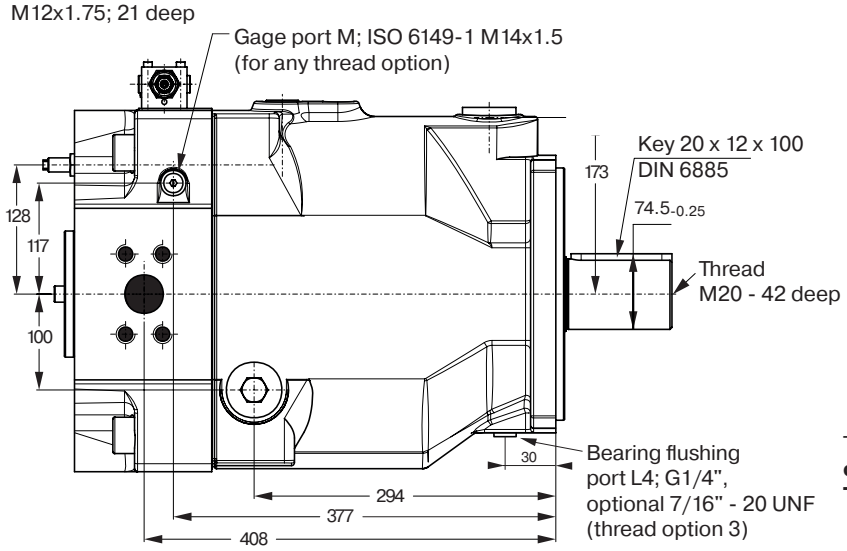

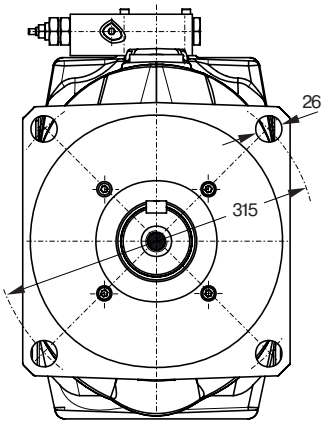

The pump shown above has **Mounting option K** and **through drive variation T** (prepared for through drive)

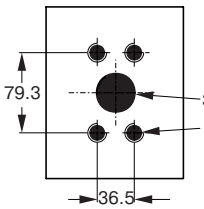

OUTLET for metric and SAE version:
flange according ISO 6162
DN 38; PN 400 bar 1 1/2"
4 x M16, 30 deep
optional 5/8" - 11 UNC - 2B
(thread option 3)

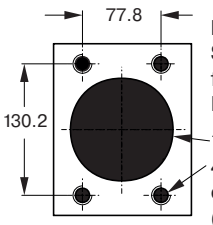

INLET for metric and SAE version:
flange according ISO 6162
DN 102; PN 35 bar 4"
4 x M16, 30 deep
optional 5/8" - 11 UNC - 2B
(thread option 3)

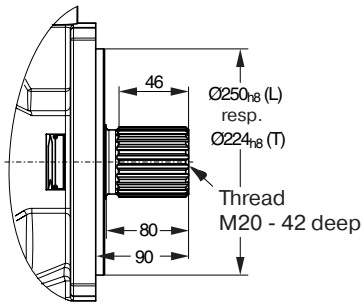

Mounting option L, T,
splined shaft
W 70 x 3 x 22 x 8f DIN 5480

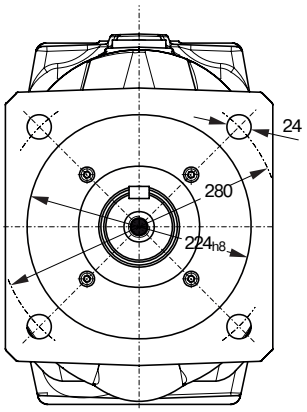

mounting option R
pilot diameter Ø224 mm

Shown is a clockwise rotating pump with standard pressure control. Counter clockwise rotating pump have inlet, outlet and gage port reversed.

Parker Hannifin Manufacturing Germany GmbH & Co. KG
Pump & Motor Division Europe
Chemnitz, Germany

Tel: +45 63 12 83 00 | Email: ps@hymatik.com | www.hymatik.com | Hvidkaervej 27a, DK-5250 Odense SV, Denmark

PV 360 SAE Version

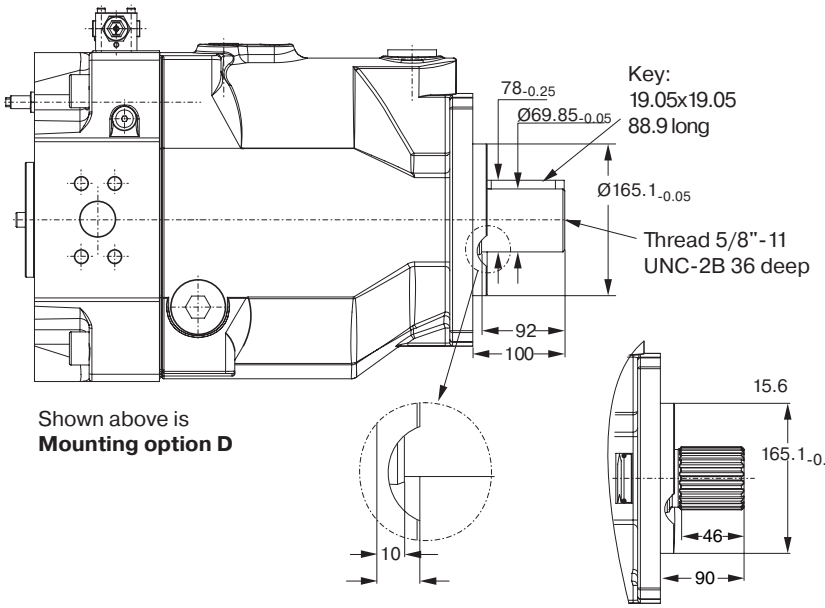

Shown above is
Mounting option D

Mounting option E
splined shaft W 70x3x22x8f,
DIN 5480

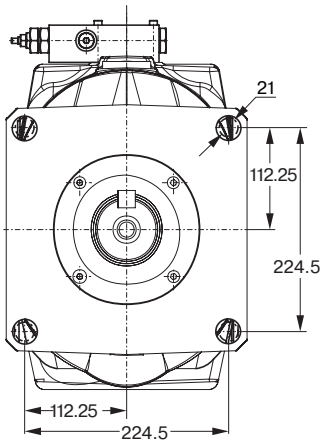

Note:
The dimensions shown conform to ISO 3019/1 the actual hole dimensions conform to ISO 3019/2 (pitch Ø315, hole Ø26, see previous page) and cover ISO 3019/1 dimensions as well. Use washers when assembling pump.

Variation with through drive

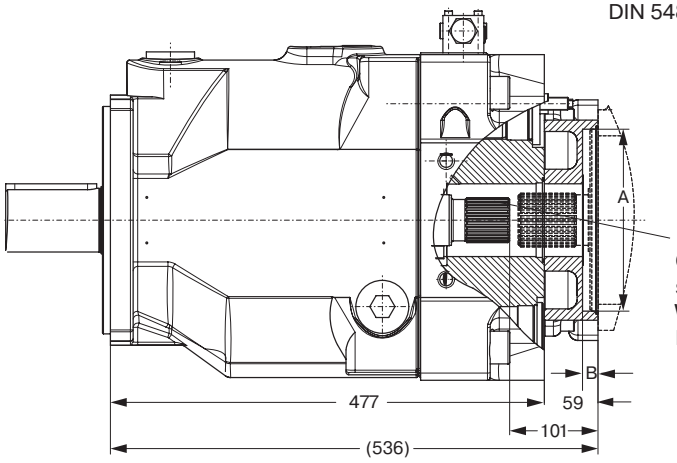

Output:
splined shaft
W 50 x 2 x 24 x 9 g
DIN 5480

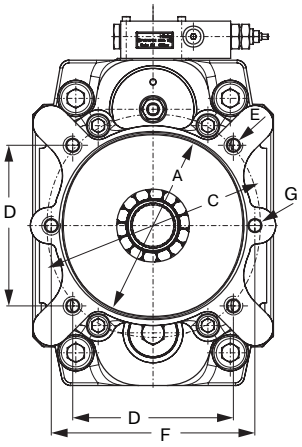

Through drive adaptors are available with the following dimensions								
Drawing Dimension / Through drive option	A	B	C	D	E	F	G	Remark
A	82.55	8	-	-	-	106	M10	SAE A 2-Bolt
B	101.6	11	127	89.8	M12	146	M12	SAE B 2/4-Bolt
C	127	13.5	162	114.6	M12	181	M16	SAE C 2/4-Bolt
D	152.4	13.5	228.5	161.6	M16	229	M16	SAE D 2/4-Bolt
E	165.1	17	317.5	224.5	M20	-	-	SAE E 4-Bolt
J	100	10.5	125	88.4	M10	140	M12	2/4-Bolt
K	125	10.5	160	113.1	M12	180	M16	2/4-Bolt
L	160	13.5	200	141.4	M16	224	M20	2/4-Bolt
M	200	13.5	250	176.8	M20	-	-	4-Bolt

Parker Hannifin Manufacturing Germany GmbH & Co. KG
Pump & Motor Division Europe
Chemnitz, Germany

Tel: +45 63 12 83 00 | Email: ps@hymatik.com | www.hymatik.com | Hvidkaervej 27a, DK-5250 Odense SV, Denmark

Dimensions standard pressure control, code ...MMC

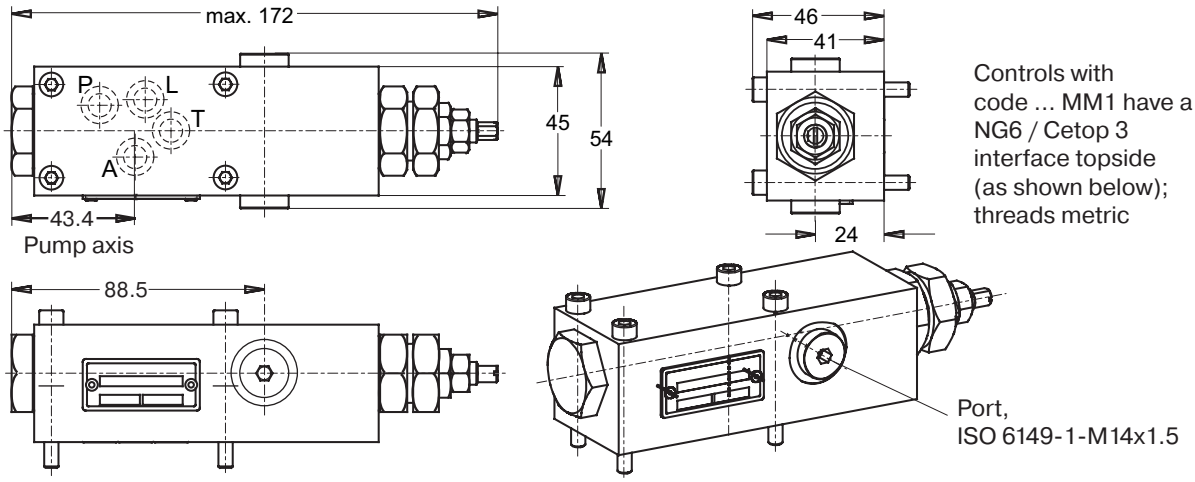

Dimensions remote pressure and load sensing control, codes ...MR1, ...MF1

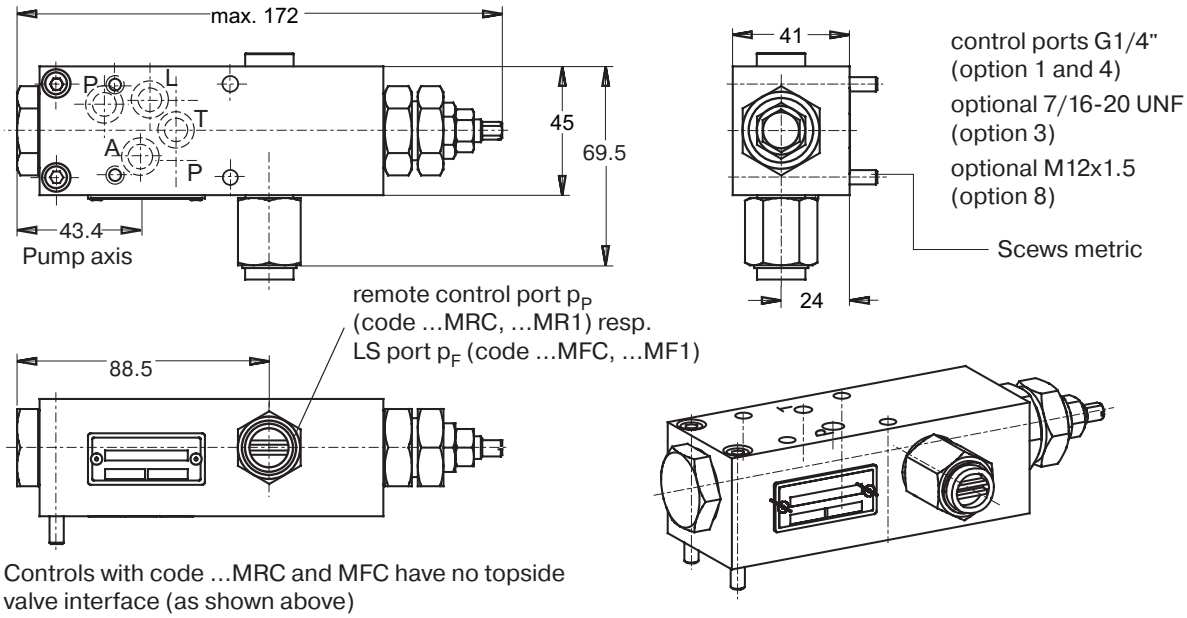

Dimensions horse power pilot cartridge, displacement sensor (Contactless Inductive Position)

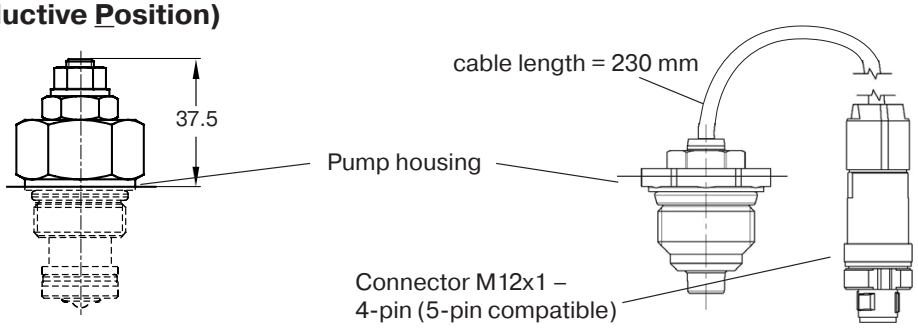

Parker Hannifin Manufacturing Germany GmbH & Co. KG
Pump & Motor Division Europe
Chemnitz, Germany

Tel: +45 63 12 83 00 | Email: ps@hymatik.com | www.hymatik.com | Hvidkaervej 27a, DK-5250 Odense SV, Denmark

Dimensions for controls with unloading valve, codes ...M*W

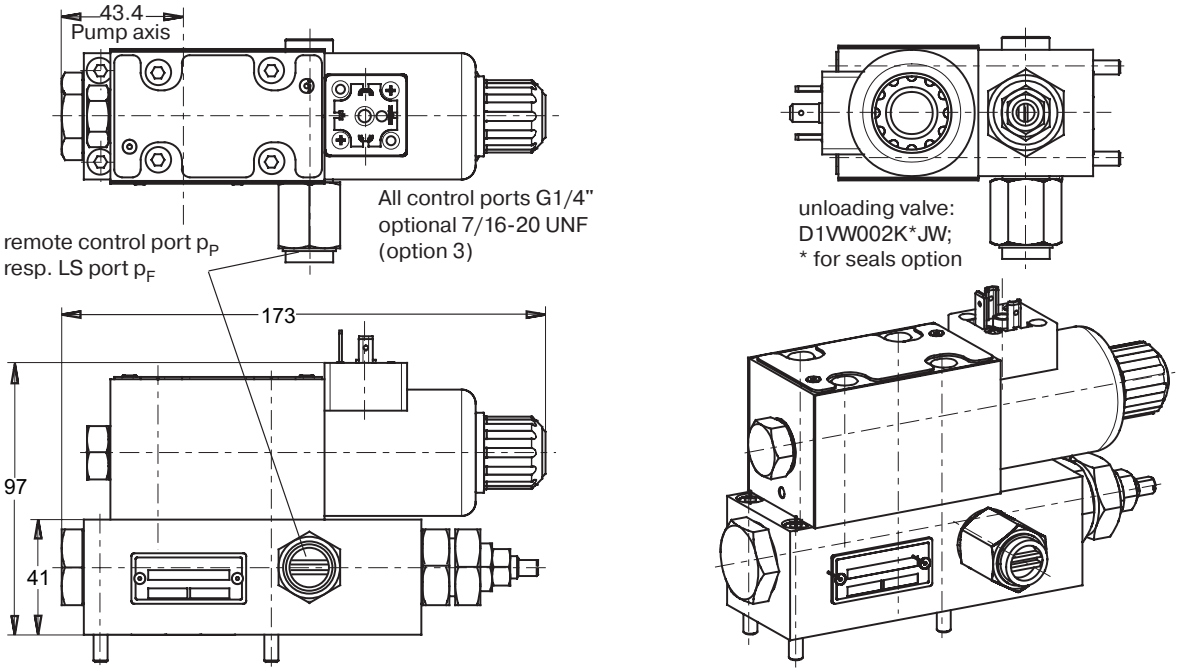

Shown in version MRW/MFW, version MMW has no remote control port.

Dimensions for controls with proportional pressure pilot valve, codes ...M*K

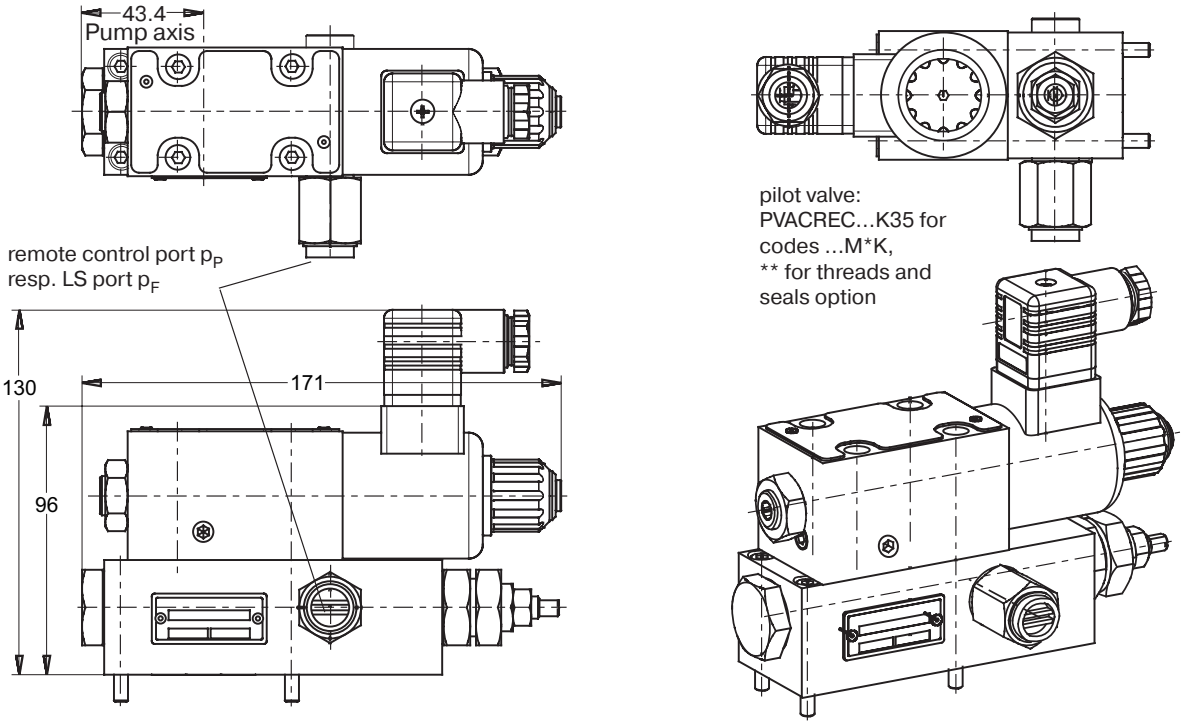

Shown in version MRK/MFK, version MMK has no remote control port.
Dimensions for horse power compensator *L* and *C* are identical to MM* respectively MF*.

Parker Hannifin Manufacturing Germany GmbH & Co. KG
Pump & Motor Division Europe
Chemnitz, Germany

Tel: +45 63 12 83 00 | Email: ps@hymatik.com | www.hymatik.com | Hvidkaervej 27a, DK-5250 Odense SV, Denmark

Dimensions two spool load sensing control, code ...MT1, ...MTP

All connecting scews metric

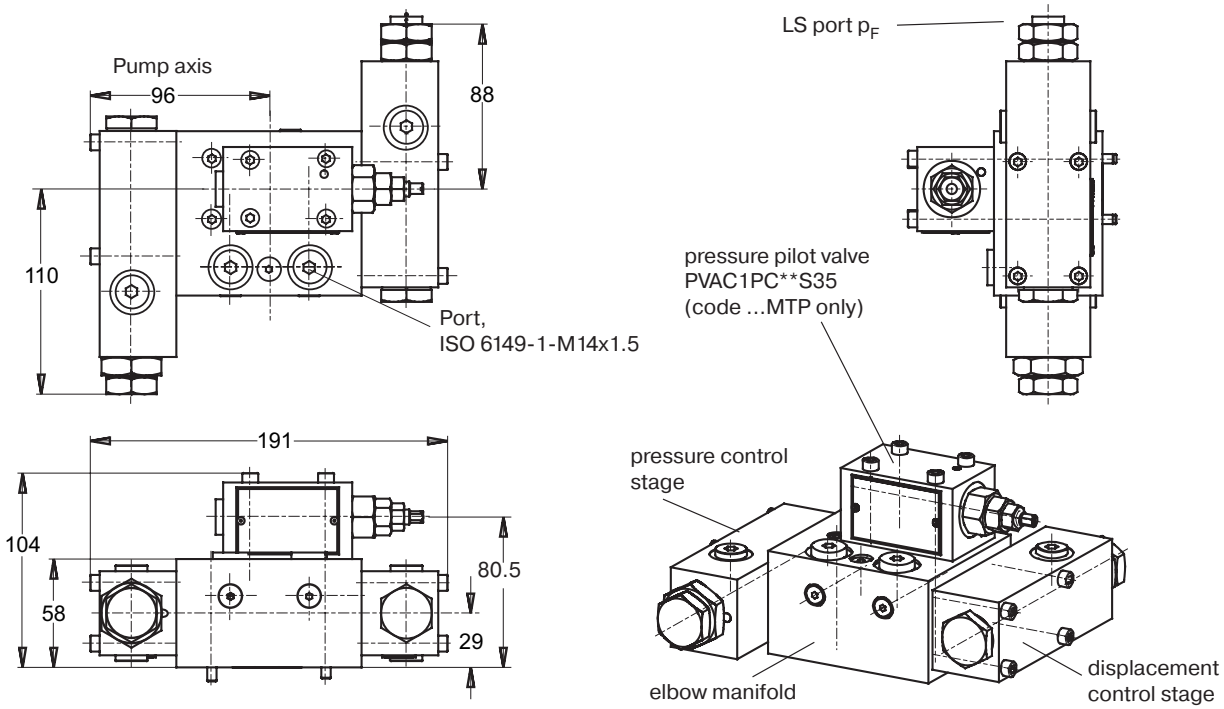

Shown version MTP

Dimensions two spool load sensing control with proportional pressure pilot valve, code ...MTK – All connecting scews metric

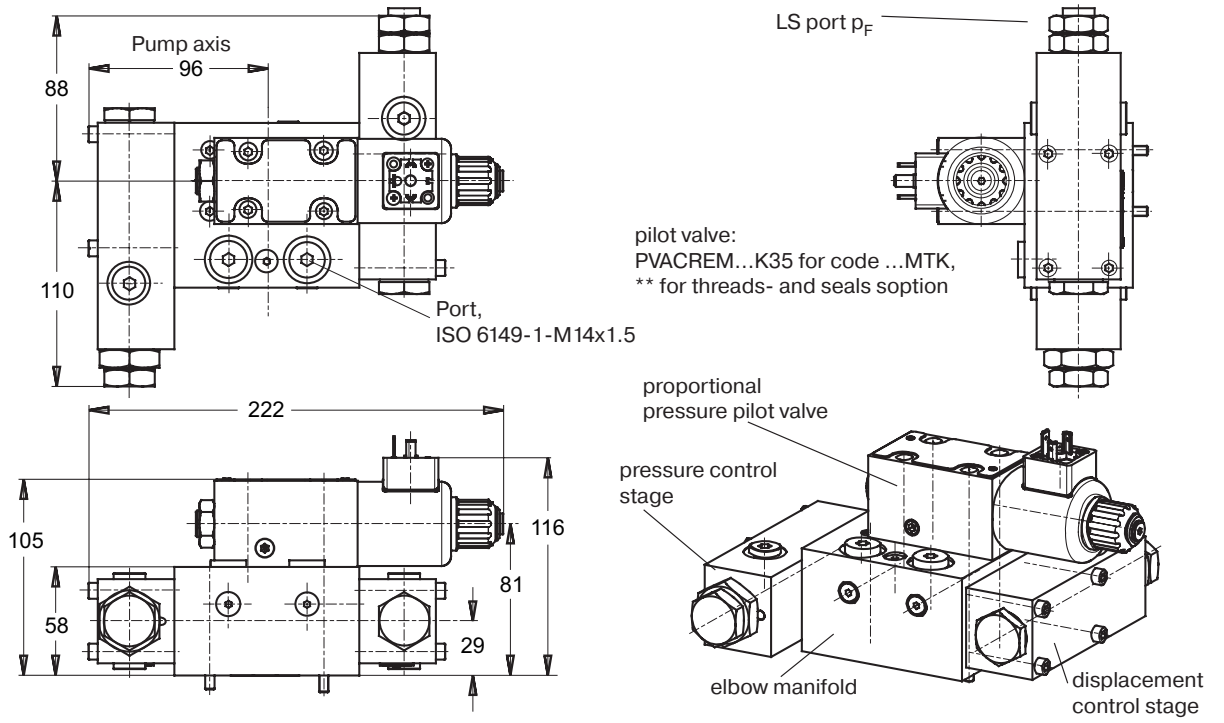

Parker Hannifin Manufacturing Germany GmbH & Co. KG
Pump & Motor Division Europe
Chemnitz, Germany

Tel: +45 63 12 83 00 | Email: ps@hymatik.com | www.hymatik.com | Hvidkaervej 27a, DK-5250 Odense SV, Denmark

Dimensions proportional displacement control, code ...FDV – All connecting scews metric

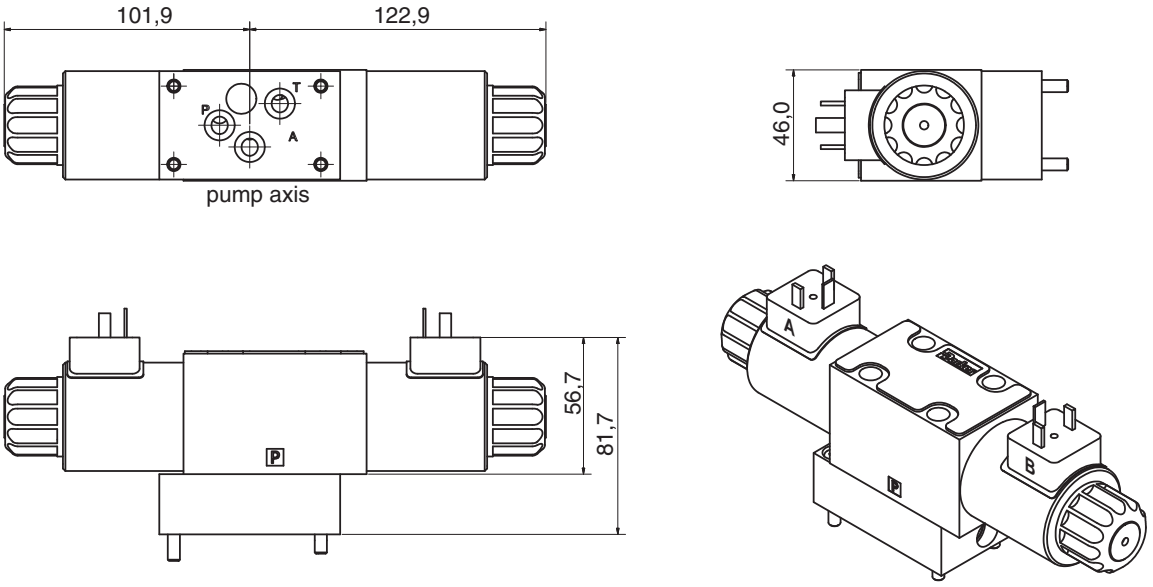

Dimensions proportional p/Q-control, codes ...UDR, ...UDK, ...UDM

All connecting scews metric

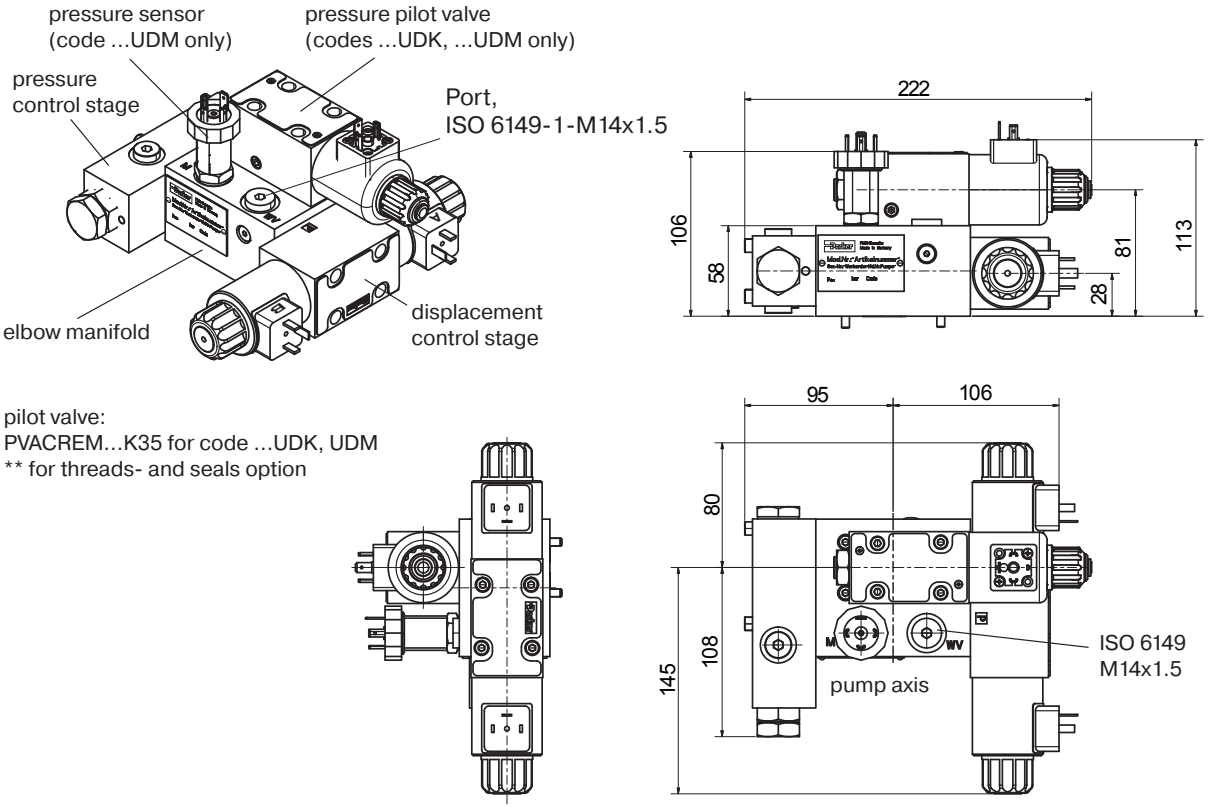

Parker Hannifin Manufacturing Germany GmbH & Co. KG
Pump & Motor Division Europe
Chemnitz, Germany

Tel: +45 63 12 83 00 | Email: ps@hymatik.com | www.hymatik.com | Hvidkaervej 27a, DK-5250 Odense SV, Denmark

Features

- Digital control circuit
- Covers all displacements
- Covers all available functions (pressure, displacement, power)
- Predefined parameter sets (Plug & Play)
- Connection via USB cable (USB-A/USB-B)
- Ramp time up to 60 seconds
- Compliant to the relevant european EMC specifications
- Offline editing of parameter sets
- Error diagnosis
- Easy hands on control tuning due to online monitoring of PID gains
- All settings (ramps, MIN/MAX, control parameters) can be stored digitally and recalled from a PC to duplicate settings to other modules



Technical data

Mounting style		Snap-on mounting for EN50022 rail
Body material		Polycarbonate
Inflammation class		V2...V0 acc. UL 94
Mounting position		any
Env. temperature range	[°C]	-20...+55
Protection class		IP 20 acc. DIN 40 050
Weight	[g]	260
Duty ratio	[%]	100
Supply voltage	[V]	18...30 VDC, ripple <5 % eff.
Rush in current	[A]	22 for 0.2 ms
Current consumption	[A]	< 4 for p/Q control ; < 2 for Q-control
Resolution Input Command	[%]	0.025 (power 0.1)
Interface		USB-Typ B
EMC		EN 50 081-2, EN 50 082-2
Connctors		Screw terminals 0.2...2.5 mm², plug in style
Cables	[mm²]	Supply and solenoid cables; 1.5 mm² (AWG16) overall braid shield. Sensor and command signals; 0.5 mm² (AWG20) overall braid shield
Max. cable length	[m]	50

For programming the module via PC an interface cable is needed, please order part number PQDXXA-ZXX-KABEL separately.

Ordering code

PQD	XX	A	–	Z10
Digital control module for p/Q control	For all frame sizes series PV	Version A		Option

downward compatible * Z00

Programming software

The programming of the p/Q control module is done in an easy to learn mode. To select the pump model and size and to set the control parameters the program ProPVplus must be started. The program runs under common windows systems.

Latest software available at: **www.parker.com/pmde**

Features

- Display and documentation of parameter sets
- Save and reload of optimized parameter sets
- Offers oscilloscope function for easy performance evaluation and optimization
- Parameter sets for all PVplus pumps are pre-installed in the modules

Parker Hannifin Manufacturing Germany GmbH & Co. KG
Pump & Motor Division Europe
Chemnitz, Germany

Tel: +45 63 12 83 00 | Email: ps@hymatik.com | www.hymatik.com | Hvidkaervej 27a, DK-5250 Odense SV, Denmark

Features

- Control, monitor and parameter setting via Profinet ® interface
- Covers all displacements and controls (pressure, displacement, power)
- Quick and easy integration with available GSDML and predefined and online available function blocks for I/Os as well as parametrization
- Full integration into overlaying machine control (PLC + HMI) Process parameter, Static Parameter, Conditions
- Predefined data sets for Plug&Play commissioning
- Quick and easy wiring with Push in contact blocks
- Switch function with two RJ45 ports
- Alternative Connection via USB cable (USB-A/USB-B)
- Compatible to the relevant european EMC specification
- Certified by Profibus User Organisation
- Easy error diagnosis



Technical data

Mounting style		Snap-on mounting for EN50022
Body material		Polyamide PA6.6
Inflammation class		V0 acc. UL 94
Mounting position		any
Env. temperature range	[°C]	-20...+55
Protection class		IP 20 acc. DIN 40 050
Weight	[g]	260
Duty ratio	[%]	100
Supply voltage	[V]	18...30 VDC, ripple <5 % eff.
Rush in current	[A]	22 for 0.2 ms
Current consumption	[A]	< 4 for p/Q control ; < 2 for Q-control
Resolution Input Command	[%]	0.025 (power 0.1)
Interface		2 x RJ45, USB-B
EMC		EN61000-6-2: 2005 (Immunity), EN61000-6-3: 2007 +A1: 2010 (Emission)
Connectors		Push in terminals 0.2...2.5 mm², plug in style
Cables	[mm²]	Supply and solenoid cables; 1.5 mm² (AWG16) overall braid shield. Sensor and command signals; 0.5 mm² (AWG20) overall braid shield
Max. cable length	[m]	50

Further information at bulletin MSG30-3256-INST/UK

Ordering code

PQD	XX	A	–	PROFINET	–	Z10
Digital control module for p/Q control	For all frame sizes series PV	Version A				Option

Programming software

The programming of the p/Q control module is done in an easy to learn mode. To select the pump model and size and to set the control parameters the program ProPVplus must be started. The program runs under common windows systems.

Latest software available at: **www.parker.com/pmde**

Features

- Display and documentation of parameter sets
- Save and reload of optimized parameter sets
- Offers oscilloscope function for easy performance evaluation and optimization
- Parameter sets for all PVplus pumps are pre-installed in the modules

Parker Hannifin Manufacturing Germany GmbH & Co. KG
Pump & Motor Division Europe
Chemnitz, Germany

Tel: +45 63 12 83 00 | Email: ps@hymatik.com | www.hymatik.com | Hvidkaervej 27a, DK-5250 Odense SV, Denmark

Mounting kits for multiple pumps, for second pump option

MK – PV BG ☐ ☐ ☐ ☐

- **MK** – Mounting kit
- **PV** – Axial piston pump series PV
- **BG** – Size
- ☐ – Second pump
- ☐ – Thread
- ☐ – Seals

Code	Pump size
1	Pump size 1: PV016 – PV028
2	Pump size 2: PV032 – PV046
3	Pump size 3: PV063 – PV092
4	Pump size 4: PV140 – PV180
5	Pump size 5: PV270 – PV360

Code	Second pump, SAE
T	Prepared for through drive option (plugged)
A	SAE A-2, diameter 82.55 mm
B	SAE B-2/4, diameter 101.6 mm
C	SAE C-2/4, diameter 127 mm
D	SAE D-4, diameter 152.4 mm
E	SAE E-4, diameter 165.1 mm
	Second pump, metric
J	Diameter 100 mm
K	Diameter 125 mm
L	Diameter 160 mm
M	Diameter 200 mm

Code	Seals
N	NBR
V	FPM

Code	Thread
M	Metric
S	SAE

Kit contains positions 30, 69, 84, 85 and 87, see spare part list

Mounting kits for multiple pumps, couplings

MK – PV BG ☐ K ☐

- **MK** – Mounting kit
- **PV** – Axial piston pump series PV
- **BG** – Size
- **K** – Coupling

Code	Pump size
1	Pump size 1: PV016 – PV028
2	Pump size 2: PV032 – PV046
3	Pump size 3: PV063 – PV092
4	Pump size 4: PV140 – PV180
5	Pump size 5: PV270 – PV360

Kit contains positions 1 (and 2 for keyed shaft).

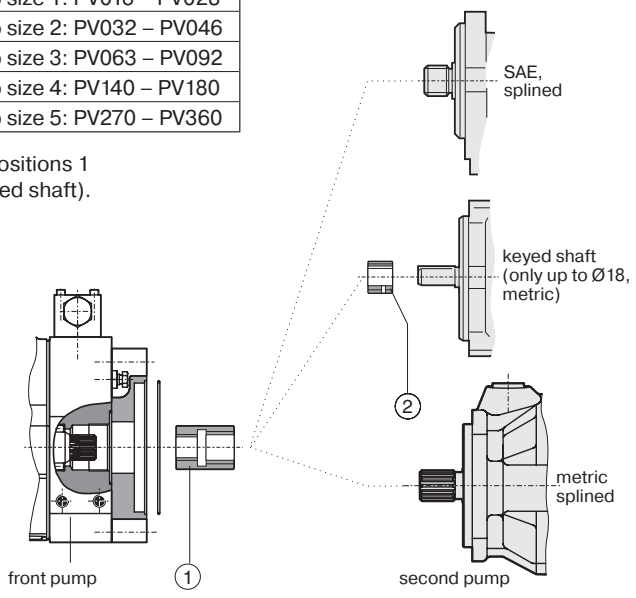

Code	Coupling for metric, splined shaft DIN 5480
01	N25 x 1.5 x 15
02	N32 x 1.5 x 20
03	N40 x 1.5 x 25
04	N50 x 2 x 24
05	N60 x 2 x 28
06	N70 x 3 x 22*
	Coupling for SAE splined shaft flat root, side fit
11	SAE A, 9T 16/32
12	SAE, 11T 16/32
13	SAE B, 13T 16/32
14	SAE B-B, 15T 16/32
15	SAE C, 14T 12/24
16	SAE C-C, 17T 12/24
17	SAE D+E, 13T 8/16
18	SAE F, 15T 8/16
	Coupling + adaptor for keyed shaft
20	Diameter 12 mm
21	Diameter 16 mm
22	Diameter 18 mm

* For PV360 only

Availability of through drive flange and coupling please check with ordering code options per each pump size, starting at page 6

Parker Hannifin Manufacturing Germany GmbH & Co. KG
Pump & Motor Division Europe
Chemnitz, Germany

Tel: +45 63 12 83 00 | Email: ps@hymatik.com | www.hymatik.com | Hvidkaervej 27a, DK-5250 Odense SV, Denmark

Multiple Pump Combinations – Maximum Moment

Combinations of multiple pumps might require additional pump support to avoid high stress on the front mounting flange. Combinations of two PVplus pumps in the same frame size generally do not need additional support in an industrial application. For combinations of more pumps support is required.

In case of combinations of a PVplus pump with another type of pump it is recommended to calculate the moment for the combination and compare with the maximum moment in table 1 below.

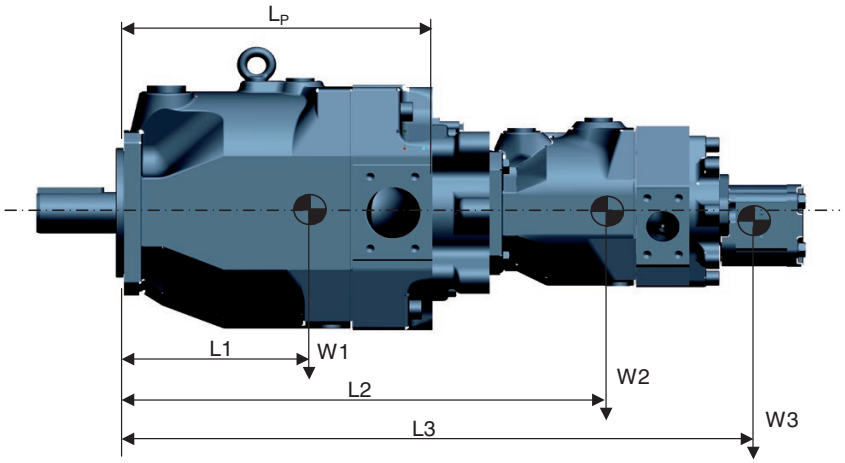

Moment M = (L1*W1 + L2*W2 + L3*W3 +...)

Note: If the calculated moment M exceed the maximum moment in table 1 below, additional pump support is needed

Table 1: Maximum Moment and Pump Dimensions

		PV016-PV028	PV032-PV046	PV063-PV092	PV140-PV180	PV270	PV360
Maximum moment [1]	[Nm]	81	151	401	591	1686	1686
Weight W	[N]	186	294	589	883	1687	1766
Distance L1	[mm to C/G]	106	119	178	184	234	238
Distance Lp	[mm]	197.5	227	287	350	472.5	477

[1] at dynamic weight acceleration 10g = 98.1 m/sec^2

Table 2 Through Drive Adapter Plate Thickness [mm]

Adapter option [2]	PV016-PV028	PV032-PV046	PV063-PV092	PV140-PV180	PV270	PV360
A	27	34	39	65	59	59
B	27	34	39	65	59	59
C	-	49	39	65	59	59
D	-	-	64	65	59	59
E	-	-	-	-	59	59
G	27	34	39	-	-	-
J	27	34	39	65	59	59
K	-	34	39	65	59	59
L	-	-	39	65	59	59
M	-	-	-	-	59	59

[2] See page 6 to 17 for reference per each frame size.

Parker Hannifin Manufacturing Germany GmbH & Co. KG
Pump & Motor Division Europe
Chemnitz, Germany

Tel: +45 63 12 83 00 | Email: ps@hymatik.com | www.hymatik.com | Hvidkaervej 27a, DK-5250 Odense SV, Denmark

Maximum allowed transferable torque FRONT							
Shaft code	Shaft type	Transferable torque at FRONT shaft end. [Nm]					
		PV016-028	PV032-046	PV063-092	PV140-180	PV270	PV360
D	SAE - Key	300	650	1850	2150	2150	4750
E	SAE - Spline	320	630	1700	2750	2800	8100*
F	SAE - Key				1200		
G	SAE - Spline				1700		
R	Metric - Key						3750
T	Metric - Spline						8100
K	Metric - Key	280	640	1200	1550	3300	3750
L	Metric - Spline	320	720	1500	3050	5750	8100
Maximum allowed transferable torque REAR							
Max. torque transmission cap. for rear mounted pump		350	520	1100	1550	3150	3250

* DIN5480 splined

Important notice:

The max. allowable torque of the individual shaft must not be exceeded. For 2-pump combinations there is no problem because PV series offers 100 % through torque. For 3-pump combinations (and more) the limit torque could be reached or exceeded.

Therefore it is necessary to calculate the resulting input as well as through drive torque.

Tel: +45 63 12 83 00 | Email: ps@hymatik.com | www.hymatik.com | Hvidkaervej 27a, DK-5250 Odense SV, Denmark

Parker Hannifin Manufacturing Germany GmbH & Co. KG
Pump & Motor Division Europe
Chemnitz, Germany

Tel: +45 63 12 83 00 | Email: ps@hymatik.com | www.hymatik.com | Hvidkaervej 27a, DK-5250 Odense SV, Denmark

Change History with 47 design:

- New displacement feedback sensor (CIP) is introduced. Previously used LVDT is not available with new design series any longer.
- Attention: All bolts/threads for controls, accessories and throughdrives unified to metric.
- Attention: Measuring-, external pilot-, remoteports all unified to metric M14x1.5. Remote adapters towards G1/4 and 7/16 20 UNF still available and included with remote/LS-control
- Airbleed-valves and respective cavities fully removed.
- Eye bolts removed from delivery content. Thread in casting remains and may be used for lifting purpose

WARNING – USER RESPONSIBILITY

FAILURE OR IMPROPER SELECTION OR IMPROPER USE OF THE PRODUCTS DESCRIBED HEREIN OR RELATED ITEMS CAN CAUSE DEATH, PERSONAL INJURY AND PROPERTY DAMAGE.

This document and other information from Parker-Hannifin Corporation, its subsidiaries and authorized distributors provide product or system options for further investigation by users having technical expertise.

The user, through its own analysis and testing, is solely responsible for making the final selection of the system and components and assuring that all performance, endurance, maintenance, safety and warning requirements of the application are met. The user must analyze all aspects of the application, follow applicable industry standards, and follow the information concerning the product in the current product catalog and in any other materials provided from Parker or its subsidiaries or authorized distributors.

To the extent that Parker or its subsidiaries or authorized distributors provide component or system options based upon data or specifications provided by the user, the user is responsible for determining that such data and specifications are suitable and sufficient for all applications and reasonably foreseeable uses of the components or systems.

Offer of Sale

Please contact your Parker representation for a detailed "Offer of Sale".

Parker Hannifin Manufacturing Germany GmbH & Co. KG
Pump & Motor Division Europe
Chemnitz, Germany

Tel: +45 63 12 83 00 | Email: ps@hymatik.com | www.hymatik.com | Hvidkaervej 27a, DK-5250 Odense SV, Denmark

Parker Worldwide

Europe, Middle East, Africa

AE – United Arab Emirates,
Dubai
Tel: +971 4 8127100

BE/NL/LU – Benelux,
Hendrik Ido Ambacht
Tel: +31 (0)541 585 000

BY – Belarus, Minsk
Tel: +48 (0)22 573 24 00

CH – Switzerland, Etoy
Tel: +41 (0)21 821 87 00

CZ – Czech Republic,
Prague
Tel: +420 284 083 111

DE – Germany, Kaarst
Tel: +49 (0)2131 4016 0

DK – Denmark, Ballerup
Tel: +45 43 56 04 00

ES – Spain, Madrid
Tel: +34 902 330 001

FI – Finland, Vantaa
Tel: +358 (0)20 753 2500

FR – France, Contamine s/Arve
Tel: +33 (0)4 50 25 80 25

HU – Hungary, Budaörs
Tel: +36 23 885 470

IE – Ireland, Dublin
Tel: +353 (0)1 466 6370

IL – Israel
Tel: +39 02 45 19 21

IT – Italy, Corsico (MI)
Tel: +39 02 45 19 21

NO – Norway, Asker
Tel: +47 66 75 34 00

PL – Poland, Warsaw
Tel: +48 (0)22 573 24 00

PT – Portugal
Tel: +351 22 999 7360

RO – Romania, Bucharest
Tel: +40 21 252 1382

RU – Russia, Moscow
Tel: +7 495 645-2156

SE – Sweden, Borås
Tel: +46 (0)8 59 79 50 00

SL – Slovenia, Novo Mesto
Tel: +386 7 337 6650

TR – Turkey, Istanbul
Tel: +90 216 4997081

UK – United Kingdom, Warwick
Tel: +44 (0)1926 317 878

ZA – South Africa,
Kempton Park
Tel: +27 (0)11 961 0700

North America

CA – Canada, Milton, Ontario
Tel: +1 905 693 3000

US – USA, Cleveland
Tel: +1 216 896 3000

Asia Pacific

AU – Australia, Castle Hill
Tel: +61 (0)2-9634 7777

CN – China, Shanghai
Tel: +86 21 2899 5000

HK – Hong Kong
Tel: +852 2428 8008

IN – India, Mumbai
Tel: +91 22 6513 7081-85

JP – Japan, Tokyo
Tel: +81 (0)3 6408 3901

KR – South Korea, Seoul
Tel: +82 2 559 0400

MY – Malaysia, Shah Alam
Tel: +60 3 7849 0800

NZ – New Zealand,
Mt Wellington
Tel: +64 9 574 1744

SG – Singapore
Tel: +65 6887 6300

TH – Thailand, Bangkok
Tel: +662 186 7000

TW – Taiwan, Taipei
Tel: +886 2 2298 8987

South America

AR – Argentina, Buenos Aires
Tel: +54 3327 44 4129

BR – Brazil,
Sao Jose dos Campos
Tel: +55 080 0727 5374

CL – Chile, Santiago
Tel: +56 22 303 9640

MX – Mexico, Toluca
Tel: +52 72 2275 4200

European Product Information Centre
Free phone: 00 800 27 27 5374
(from AT, BE, CH, CZ, DE, DK, EE, ES, FI, FR, IE, IL, IS, IT, LU, MT, NL, NO, PL, PT, RU, SE, SK, UK, ZA)

© 2021 Parker Hannifin Corporation.
All rights reserved.

Catalogue MSG30-3245/UK 08/2021

Parker Hannifin
Manufacturing Germany GmbH & Co. KG
Pump & Motor Division Europe
Neefestrasse 96
09116 Chemnitz, Germany
Tel.: +49 (0)3 71 393 70
Email: pmde-pqd-support@parker.com
www.parker.com

Your local authorized Parker distributor