hymatik



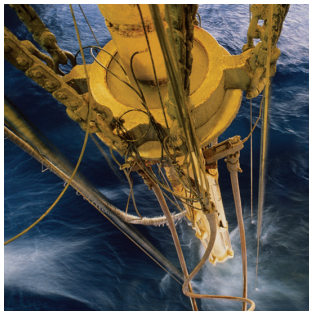





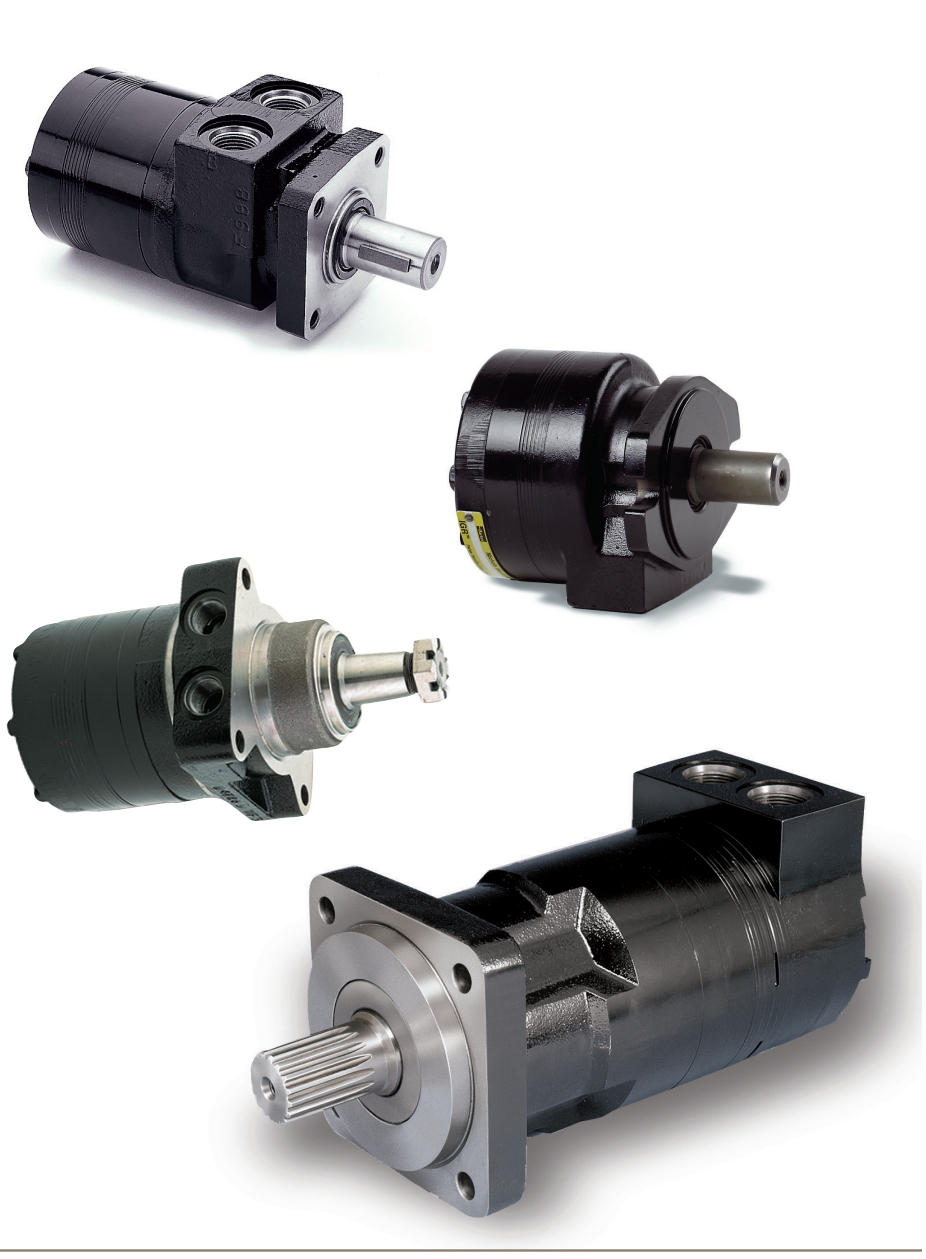

LSHT Torqmotors™ and Nichols™ Motors

Catalog No. HY13-1590-011/US,EU



Parker

ENGINEERING YOUR SUCCESS.

Tel: +45 63 12 83 00 | Email: ps@hymatik.com | www.hymatik.com | Hvidkaervej 27a, DK-5250 Odense SV, Denmark

⚠ WARNING

FAILURE OR IMPROPER SELECTION OR IMPROPER USE OF THE PRODUCTS AND/OR SYSTEMS DESCRIBED HEREIN OR RELATED ITEMS CAN CAUSE DEATH, PERSONAL INJURY AND PROPERTY DAMAGE.

This document and other information from Parker Hannifin Corporation, its subsidiaries and authorized distributors provide product and/or system options for further investigation by users having technical expertise. It is important that you analyze all aspects of your application and review the information concerning the product or system in the current product catalog. Due to the variety of operating conditions and applications for these products or systems, the user, through its own analysis and testing, is solely responsible for making the final selection of the products and systems and assuring that all performance, safety and warning requirements of the application are met.

The products described herein, including without limitation, product features, specifications, designs, availability and pricing, are subject to change by Parker Hannifin Corporation and its subsidiaries at any time without notice.

Offer of Sale

The items described in this document are hereby offered for sale by Parker Hannifin Corporation, its subsidiaries or its authorized distributors. This offer and its acceptance are governed by the provisions stated on the separate page of this document entitled “Offer of Sale”.

© 2000—2019 , Parker Hannifin Corporation

Parker

⚠ WARNING

This product can expose you to chemicals including lead and DEHP, which are known to the State of California to cause cancer, and birth defects or other reproductive harm. For more information go to www.p65warnings.ca.gov

Parker Hannifin Corporation
Pump & Motor Division
Greeneville, Tennessee, USA

Wherever in the world machinery is designed, manufactured, or used, Parker is there to meet your hydraulic application requirements–with complete hydraulic component selection, worldwide availability, and technical assistance.

This catalog contains the information you need to order hydraulic motor products. It contains complete specifications, dimensions, and ordering information on the complete line of Parker hydraulic motor products, including technical data and reference material for designers, builders, and users of motion control machinery. No more shuffling through dozens of separate catalogs from dozens of separate suppliers.

And when you're ready to order, call your local Parker hydraulic distributor for fast delivery and service. Or call your Parker Hydraulic Sales Office (see listing at the back of this catalog).

In line with our policy of continuing product improvement, specifications and information contained in this catalog are subject to change.

Copyright © 2000—2019, Parker Hannifin Corporation.
All rights reserved.

PRINTED IN THE U.S.A.

000 Intro & TOC.indd, a

⚠ **WARNING**
This product can expose you to chemicals including lead and DEHP, which are known to the State of California to cause cancer, and birth defects or other reproductive harm. For more information go to www.p65warnings.ca.gov

Tel: +45 63 12 83 00 | Email: ps@hymatik.com | www.hymatik.com | Hvidkaervej 27a, DK-5250 Odense SV, Denmark

Contents

Low Speed High Torque Torqmotor™ Series

TC Series....7–24
TB Series....25–50
TS Series....51–62
TE Series....63–92
TJ Series....93–106
Light Duty Options....107–114
TF Series....115–140
TF Clutch Series....141–146
DF Brake Series....147–154
TL Series....155–168
TG Series....169–194
BG Brake Series....195–202
DG Brake Series....203–210
TH Series....211–232
BH Series....233–238
Medium Duty Options....239–244
TGK Series....245–266
THK Series....267–288
TK Series....289–302
Heavy Duty Options....303–308
Installation/Operation Data....309–312

Low Speed High Torque Nichols™ Motors Series

110A Series....313–332
700 Series....333–356
716 Series....357–376
Nichols™ Options....377–380
Installation/Operation Data....381–382

Engineering Data for Torqmotor™ and Nichols™ Motor....383–386
High Speed Hydraulic Motor....387–400
Offer of Sale....401
Sales Offices....Back Cover

WARNING
This product can expose you to chemicals including lead and DEHP, which are known to the State of California to cause cancer, and birth defects or other reproductive harm. For more information go to www.p65warnings.ca.gov

Tel: +45 63 12 83 00 | Email: ps@hymatik.com | www.hymatik.com | Hvidkaervej 27a, DK-5250 Odense SV, Denmark

Introduction

Excellence of Design

The producers of Parker Hannifin's Low Speed High Torque motors have a history of manufacturing reliable, precision parts that stretches back over a century. Milestones include the first patent on roller vane rotor sets for low speed, high torque hydraulic motors. That was forty years ago. Today the technological advances continue.

In the Development Laboratory, engineers continuously measure and analyze motor data to move existing products to even higher levels of performance and to develop new products to serve the ever changing needs of our customers. Design integrity is assured by exhaustive testing on endurance stands. To be sure that this translates into superior performance, advanced manufacturing techniques are employed as well.

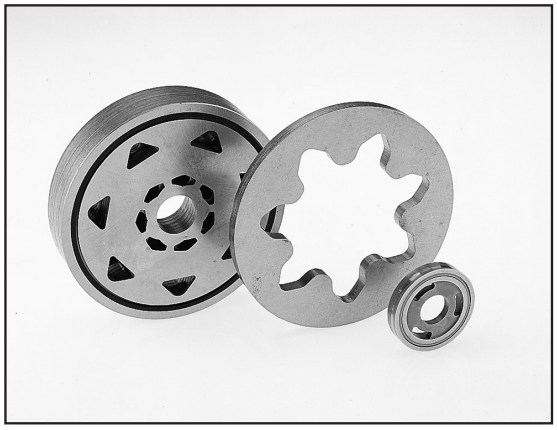

Excellence of Manufacturing

Central to manufacturing excellence is the understanding that quality parts make quality motors. The instrumentation in our Quality Assurance laboratory includes devices such as coordinate measuring machines, to accurately measure the parts that we manufacture as well as those that we purchase. Quality cannot be inspected in, however. It must be manufactured. Each machine operator is responsible for the quality of the part that comes off that machine. Efficiency is enhanced by our cellular manufacturing techniques. Accuracy is assured by statistical process control methods. Micrometers and specialized gages are at the disposal of the operator. As a final check, every motor is tested before shipment to our customer. Parker understands that our customers cannot produce quality products unless we do.



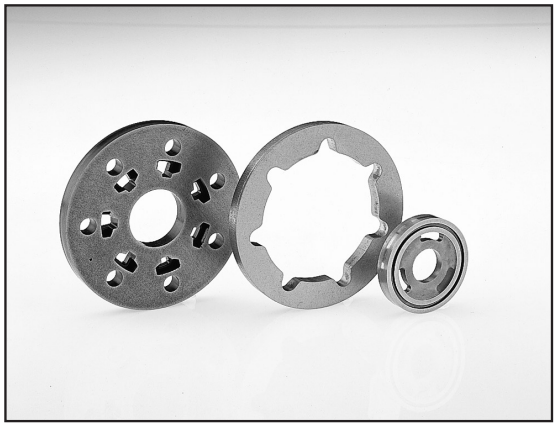

⚠ WARNING
This product can expose you to chemicals including lead and DEHP, which are known to the State of California to cause cancer, and birth defects or other reproductive harm. For more information go to www.p65warnings.ca.gov

Tel: +45 63 12 83 00 | Email: ps@hymatik.com | www.hymatik.com | Hvidkaervej 27a, DK-5250 Odense SV, Denmark

Notes

⚠ **WARNING**
This product can expose you to chemicals including lead and DEHP, which are known to the State of California to cause cancer, and birth defects or other reproductive harm. For more information go to www.p65warnings.ca.gov

Parker Hannifin Corporation
Pump & Motor Division
Greeneville, Tennessee, USA

Tel: +45 63 12 83 00 | Email: ps@hymatik.com | www.hymatik.com | Hvidkaervej 27a, DK-5250 Odense SV, Denmark

15 Displacements **15 Schluckvolumen** **15 Cylindrée** **15 Despazamientos**		(2.2 - 24.0 in³/rev) **36 . . . 390 cm³/rev**
	Cont	**Int**
Maximum Pressure **Max. Druckgefalle** **Chaute de pression max.** **Presion Maxima**	(1250 psid) **. . .86 bar**	(1750 psid) **. . .121 bar**
Maximum Oil Flow **Schluckstrom** **Débit d'huile** **Caudal Maximo de Aceite**		(15 gpm) **. . . 57 lpm**
Maximum Speed **Drehzahl** **Vitesse de rotation** **Velocidad Maxima**		(902 rpm) **902 rpm**
	Cont	**Int**
Maximum Torque **Max Drehmoment** **Couple Maxi** **Torque Maximo**	(1905 lb in) **215.2 Nm**	(2709 lb in) **306.1 Nm**
Maximum Side Load **Seitenlast** **Charges latèrales** **Carga Maxima Lateral**		(788 lb) **. . . 3505 N**

Big Performance In A Small Package

High Performance and long life in a reduced space envelope describe Parker's TC Series motors. High volume fluid flow continually washes across splines and seals to extend their life. Roller vanes and sealed commutation assure high volumetric efficiency and smooth low speed operation.

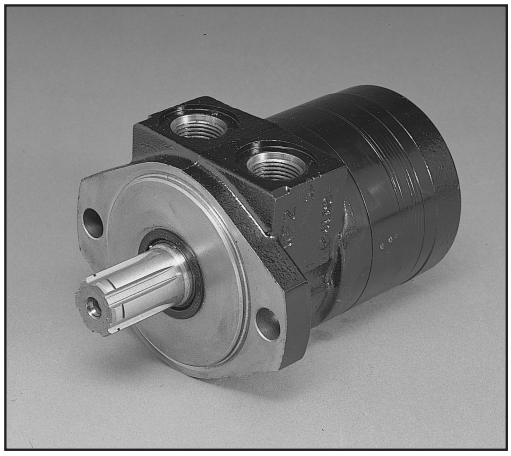

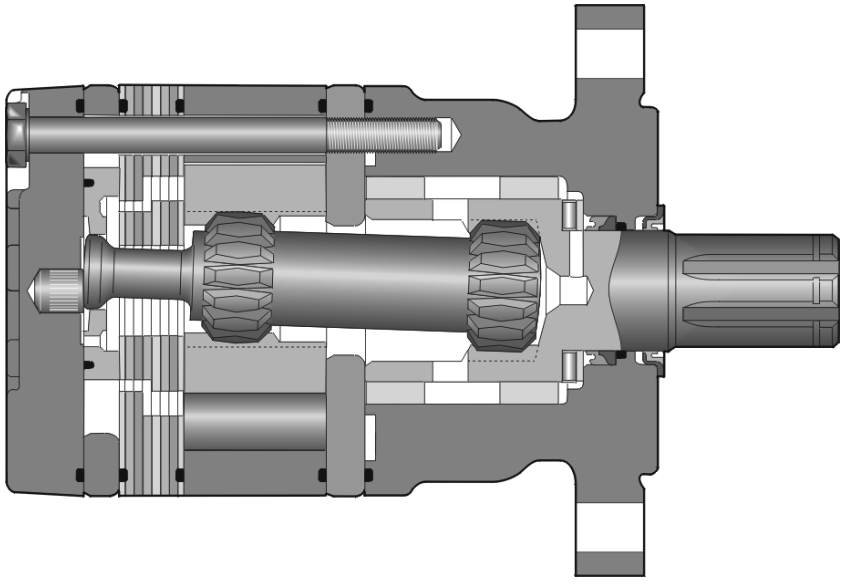

001 TC.indd, b

⚠ WARNING
This product can expose you to chemicals including lead and DEHP, which are known to the State of California to cause cancer, and birth defects or other reproductive harm. For more information go to www.p65warnings.ca.gov

Tel: +45 63 12 83 00 | Email: ps@hymatik.com | www.hymatik.com | Hvidkaervej 27a, DK-5250 Odense SV, Denmark

Ordering Information / Bestellschlüssel
System de Commande / Imformacion para pedidos

LSHT Torqmotors™ and Nichols™ Motors
TC Series / Serie / Série HY13-1590-011/US,EU

TC	XXXX	XX	XX	0	XXXX
Series	Displacement Schluckvolumen Cylindrée Desplazamiento	Mounting/Ports Gehäuse/Anschluß Carter/Plan de raccordement Montaje/Lumbreras	Shaft Welle Arbre Eje	Rotation Drehrichtung Direction de rotation Rotacion	Options Opciones

Code	cm^3/rev cm^3/tr $cm^3/giro$	in^3/rev
0036	36	2.2
0045	41	2.5
0050	49	3.0
0065	65	4.0
0080	82	5.0
0100	98	6.0
0130	130	8.0
0165	163	10.0
0195	195	11.9
0230	228	13.9
0260	260	15.9
0295	293	17.9
0330	328	20.0
0365	370	22.6
0390	392	24.0

Code	Mounting/Ports
AS	SAE "A" 2 Bolt, 7/8-14 SAE 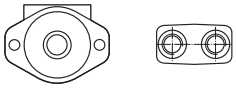
FS	4 Bolt w/3/8-16 Thd, 7/8-14 SAE 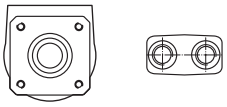
3F	SAE "A" w/.225 Pilot, 3/4 O-ring 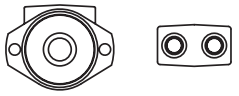
Custom Order AP	SAE "A" 2 Bolt, 1/2-14 NPTF 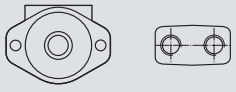

Code	Rotation
0	Standard 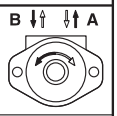
1	Reverse Timed Manifold 

Code	Shaft
10	1" Keyed 
11	1" 6B Spline 
72	Spl. Short Wood Key, 1/4 Tap 

Code	Options
AAAA[4]	"Standard", Black Paint
AAAB	"Standard", No Paint
AAAC[4]	"Standard", Double Paint
AABJ[1,4]	Free Running Rotor Set, Black Paint
AAFA	Fluorocarbon shaft seal, High Temp Commutator Seal, High Temp Section Seals, Black Paint
AAFW[4]	Fluorocarbon Seals, High Temp Commutator Seal, High Temp Section Seals, Black Paint
AAJH[4]	No Shaft Hardware, Fluorocarbon Seals, High Temp Commutator Seal, High Temp Section Seals, Black Paint
AAUP	Fluorocarbon Seals, High Temp Commutator Seal, High Temp Section Seals, No hardware, No Paint
AAVE[1,4]	Free Running Rotor Set, Fluorocarbon Seals, High Temp Commutator Seal, High Temp Section Seals, Black Paint
ABCW[4]	No Shaft Hardware, Fluorocarbon Seals, High Temperature Commutator Seal, High Temp Section Seals, Bidirectional shuttle (.062 Orifice) (11:00*), Black Paint
ABCZ[4]	Fluorocarbon Seals, High Temp Commutator Seal, High Temp Section Seals, Double Paint
BBGS[4]	No Shaft Hardware, Fluorocarbon Seals, High Temp Section Seals, High Temperature Commutator Seal, High Temp Section Seals 921 PSI Int Bidirectional Relief, Black Paint
BBGT[2,4]	No Shaft Hardware, Fluorocarbon Seals, High Temperature Commutator Seal, High Temp Section Seals, 1200 PSI Int Bidirectional Relief, Black Paint
BBGW[3,4]	No Shaft Hardware, Fluorocarbon Seals, High Temperature Commutator Seal, High Temp Section Seals, 1450 PSI Int Bidirectional Relief, Black Paint

[1] Not applicable to 0365 & 0390 displacements
[2] Not applicable to 0330, 0365 or 0390 displacements
[3] Not applicable to 0260, 0295, 0330, 0365 or 0390 displacements
[4] Paint area all over except front and rear pilot and mounting flanges and shaft

Shaded areas indicate custom order components. Standard pricing and delivery terms may not apply to these components. Please refer to the price list for details, or consult your Parker Pump Motor division Sales Resource.

TC Series are not available rear ported.

001 TC.indd, b

WARNING
This product can expose you to chemicals including lead and DEHP, which are known to the State of California to cause cancer, and birth defects or other reproductive harm. For more information go to www.p65warnings.ca.gov

Parker Hannifin Corporation
Pump & Motor Division
Greeneville, Tennessee, USA

Performance Data / Leistungsdaten
Puissance / Datos Tecnicos

LSHT Torqmotors™ and Nichols™ Motors
TC Series / Serie / Série HY13-1590-011/US,EU

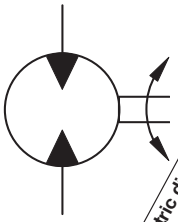

Motor Series TC	Geometric displacement Geom. Schluckvolumen Cylindrée Despazamientos cm³/rev in³/rev	Max. speed @ Max. intermittent flow Max. Drehzahl Intermittierender Betrieb: Vitesse de rotation maxi Velocidad maxima a caudal intermitente maximo rev/min	Max. oil flow Max. Schluckstrom Débit d'huile maxi Caudal Maximo de Aceite cont / int* l/min g/min		Max. Differential Pressure Max. Druckgefälle Chute de pression maxi Presion diferencial maxima cont / int* bar psid		Max. supply pressure Max. Eingangsdruck Pression maxi entrée Presion maxima de alimentacion max bar psig	Max. torque Max. Drehmoment Couple maxi Torque Maximo cont / int* Nm lb-in		Max. performance Max. Leistungabgabe Puissance de sortie maxi Maximo redinmiento max KW HP	Min. starting torque Min. Anlaufmoment Couple min. fourni au dé manrage Torque minimo de arranque cont / int* Nm lb-in	
TC 0036	**36** 2.2	902	**34** 9	**34** 9	**86** 1250	**121** 1750	**134** 1950	**31** 272	**44** 393	**4.2** 5.6	**16** 138	**27** 236
TC 0045	**41** 2.5	794	**34** 9	**34** 9	**86** 1250	**121** 1750	**134** 1950	**40** 351	**56** 496	**4.5** 6.1	**20** 174	**33** 295
TC 0050	**49** 3.0	688	**34** 9	**34** 9	**86** 1250	**121** 1750	**134** 1950	**48** 423	**67** 589	**4.7** 6.3	**27** 235	**39** 349
TC 0065	**65** 4.0	517	**34** 9	**34** 9	**86** 1250	**121** 1750	**134** 1950	**66** 582	**92** 810	**4.8** 6.5	**41** 361	**67** 590
TC 0080	**82** 5.0	413	**34** 9	**34** 9	**86** 1250	**121** 1750	**134** 1950	**96** 753	**119** 1050	**4.9** 6.6	**61** 539	**86** 758
TC 0100	**98** 6.0	460	**45** 12	**45** 12	**86** 1250	**121** 1750	**134** 1950	**100** 888	**140** 1240	**6.1** 8.2	**78** 691	**106** 934
TC 0130	**130** 8.0	429	**45** 12	**57** 15	**86** 1250	**121** 1750	**134** 1950	**138** 1218	**192** 1697	**7.5** 10.1	**111** 986	**169** 1492
TC 0165	**163** 10.0	346	**45** 12	**57** 15	**86** 1250	**121** 1750	**134** 1950	**173** 1529	**238** 2110	**7.5** 10.0	**139** 1232	**209** 1846
TC 0195	**195** 11.9	287	**45** 12	**57** 15	**86** 1250	**121** 1750	**134** 1950	**205** 1815	**286** 2532	**7.3** 9.8	**195** 1724	**264** 2332
TC 0230	**228** 13.9	246	**45** 12	**57** 15	**76** 1100	**107** 1550	**134** 1950	**215** 1905	**298** 2637	**6.3** 8.4	**195** 1722	**261** 2310
TC 0260	**260** 15.9	217	**45** 12	**57** 15	**66** 950	**97** 1400	**134** 1950	**211** 1870	**306** 2709	**5.4** 7.3	**183** 1618	**265** 2344
TC 0295	**293** 17.9	193	**45** 12	**57** 15	**59** 850	**86** 1250	**134** 1950	**208** 1843	**300** 2657	**4.7** 6.3	**189** 1675	**269** 2379
TC 0330	**328** 20.0	173	**45** 12	**57** 15	**52** 750	**76** 1100	**134** 1950	**206** 1819	**296** 2621	**4.0** 5.3	**187** 1655	**262** 2318
TC 0365	**370** 22.6	152	**45** 12	**57** 15	**45** 650	**66** 950	**134** 1950	**206** 1825	**296** 2622	**3.4** 4.6	**186** 1648	**276** 2443
TC 0390	**392** 24.0	144	**45** 12	**57** 15	**45** 650	**66** 950	**134** 1950	**207** 1832	**296** 2622	**3.2** 4.3	**192** 1698	**286** 2527

Performance data based on testing using 10W40 oil with a viscosity of 43,1 cSt. (200 SUS) at 54° C (130° F.). Performance data is typical. Actual data may vary slightly from one production motor to another.

Les donnees sur les performances sont basees sur des tests utilisant de l'huile 10W40 d'une viscosite de 200 SUS a 54°C (130°F). Ces donnees correspondent a des situations typiques. Les donnees reelles peuvent varier legerement d'un moteur de production a l'autre.

Leistungsdaten sind gemessen mit SAE 10W40 bei einer Viskositaet von 43,1 Cst bei 54°C. Geringfuegige Abweichungen von den Katalogdaten sind moeglich.

Datos tecnicos obtenidos con aceite 10W40 de 200 SUS de viscosidad a 54°C (130°F). Los datos proporcionados son valores tipcos. Los valores exactos reales podrian tener una pequena variacion entre distintos motores.

* Intermittent operation rating applies to 10% of every minute.
Intermittierende Werte maximal 10% von jeder Betriebsminute.
Fonctionnement interm. 10% max. de chaque minute d`utilisation.
Capacidad de funcionamiento intermitente valida para 10% por cada minuto.

WARNING
This product can expose you to chemicals including lead and DEHP, which are known to the State of California to cause cancer, and birth defects or other reproductive harm. For more information go to www.p65warnings.ca.gov

Tel: +45 63 12 83 00 | Email: ps@hymatik.com | www.hymatik.com | Hvidkaervej 27a, DK-5250 Odense SV, Denmark

TC 0036

2.2 cu in / rev

Flow (GPM)	PRESSURE (PSID) 500	750	1000	1250	1500	1750
.5	104 **27**	160 **18**	214 **8**			
1	108 **78**	167 **67**	222 **57**	277 **45**	328 **28**	380 **12**
2	109 **179**	169 **170**	229 **160**	287 **147**	344 **130**	396 **111**
3	107 **283**	172 **272**	235 **262**	293 **248**	351 **229**	405 **208**
4	105 **387**	168 **375**	236 **365**	295 **350**	353 **332**	410 **311**
5	103 **490**	166 **478**	233 **468**	295 **451**	354 **434**	412 **410**
7	90 **695**	156 **685**	220 **673**	286 **656**	348 **635**	410 **610**
9	76 **903**	142 **889**	208 **876**	272 **860**	332 **839**	393 **812**

TORQUE (LB IN) 272
SPEED (RPM) 860

TC 0045

2.5 cu in / rev

Flow (GPM)	PRESSURE (PSID) 500	750	1000	1250	1500	1750
.5	124 **22**	200 **13**	254 **7**			
1	131 **73**	202 **67**	270 **61**	332 **51**	403 **42**	
2	131 **163**	201 **157**	279 **149**	350 **141**	412 **130**	481 **114**
3	127 **255**	201 **248**	279 **241**	352 **231**	424 **221**	496 **208**
4	122 **346**	192 **339**	279 **330**	350 **321**	421 **310**	498 **292**
5	113 **436**	183 **429**	270 **420**	341 **410**	412 **399**	489 **381**
7	105 **615**	174 **606**	262 **594**	332 **583**	403 **569**	481 **547**
9	93 **793**	168 **784**	249 **770**	324 **757**	397 **739**	473 **717**

TORQUE (LB IN) 324
SPEED (RPM) 757

■ Cont. □ Int.

Intermittent operation rating applies to 10% of every minute.

Fonctionnement interm. 10% max. de chaque minute d'utilisation.

Performance data based on testing using 10W40 oil with a viscosity of 200 SUS at 54° C (130° F.). Performance data is typical. Actual data may vary slightly from one production motor to another.

Les donnees sur les performances sont basees sur des tests utilisant de l'huile 10W40 d'une viscosite de 200 SUS a 54°C (130°F). Ces donnees correspondent a des situations typiques. Les donnees reelles peuvent varier legerement d'un moteur de production a l'autre.

Intermittierende Werte maximal 10% von jeder Betriebsminute.

Capacidad de funcionamiento intermitente valida para 6 segundos por cada minuto.

Leistungsdaten sind gemessen mit SAE 10W40 bei einer Viskositaet von 43,1 Cst bei 54°C. Geringfuegige Abweichungen von den Katalogdaten sind moeglich.

Datos tecnicos obtenidos con aceite 10W40 de 200 SUS de viscosidad a 54°C (130°F). Los datos proporcionados son valores tipcos. Los valores exactos reales podrian tener una pequena variacion entre distintos motores.

⚠ WARNING
This product can expose you to chemicals including lead and DEHP, which are known to the State of California to cause cancer, and birth defects or other reproductive harm. For more information go to www.p65warnings.ca.gov

Tel: +45 63 12 83 00 | Email: ps@hymatik.com | www.hymatik.com | Hvidkaervej 27a, DK-5250 Odense SV, Denmark

TC 0050

3.0 cu in / rev

PRESSURE (PSID)

Flow (GPM)	500	750	1000	1250	1500	1750
.5	136 **28**	210 **17**				
1	148 **59**	226 **51**	305 **42**	377 **33**		
2	155 **136**	238 **129**	331 **117**	413 **107**	476 **95**	543 **79**
3	154 **215**	245 **207**	334 **197**	417 **186**	496 **173**	573 **157**
4	148 **292**	238 **284**	331 **273**	422 **263**	503 **251**	578 **228**
5	139 **369**	233 **361**	330 **350**	420 **340**	506 **327**	587 **305**
7	131 **519**	224 **511**	325 **498**	418 **486**	506 **470**	591 **445**
9	123 **672**	216 **661**	314 **646**	405 **632**	492 **615**	579 **592**

TORQUE (LB IN) 405
SPEED (RPM) 632

TC 0065

4.0 cu in / rev

PRESSURE (PSID)

Flow (GPM)	500	750	1000	1250	1500	1750
.5	207 **14**	333 **9**	425 **3**			
1	218 **47**	334 **43**	449 **36**	561 **30**	668 **23**	
2	231 **104**	352 **100**	471 **93**	583 **87**	700 **79**	797 **68**
3	218 **163**	341 **158**	463 **151**	582 **145**	697 **138**	811 **126**
4	209 **220**	330 **216**	462 **209**	574 **202**	695 **195**	808 **182**
5	201 **278**	320 **273**	449 **266**	571 **260**	688 **251**	801 **238**
7	186 **391**	311 **386**	439 **376**	563 **370**	682 **359**	799 **344**
9	176 **506**	297 **498**	427 **490**	547 **480**	675 **467**	796 **450**

TORQUE (LB IN) 547
SPEED (RPM) 480

■ Cont. □ Int.

Intermittent operation rating applies to 10% of every minute.

Fonctionnement interm. 10% max. de chaque minute d'utilisation.

Performance data based on testing using 10W40 oil with a viscosity of 200 SUS at 54° C (130° F.). Performance data is typical. Actual data may vary slightly from one production motor to another.

Les donnees sur les performances sont basees sur des tests utilisant de l'huile 10W40 d'une viscosite de 200 SUS a 54°C (130°F). Ces donnees correspondent a des situations typiques. Les donnees reelles peuvent varier legerement d'un moteur de production a l'autre.

Intermittierende Werte maximal 10% von jeder Betriebsminute.

Capacidad de funcionamiento intermitente valida para 6 segundos por cada minuto.

Leistungsdaten sind gemessen mit SAE 10W40 bei einer Viskositaet von 43,1 Cst bei 54°C. Geringfuegige Abweichungen von den Katalogdaten sind moeglich.

Datos tecnicos obtenidos con aceite 10W40 de 200 SUS de viscosidad a 54°C (130°F). Los datos proporcionados son valores tipcos. Los valores exactos reales podrian tener una pequena variacion entre distintos motores.

⚠ WARNING
This product can expose you to chemicals including lead and DEHP, which are known to the State of California to cause cancer, and birth defects or other reproductive harm. For more information go to www.p65warnings.ca.gov

Tel: +45 63 12 83 00 | Email: ps@hymatik.com | www.hymatik.com | Hvidkaervej 27a, DK-5250 Odense SV, Denmark

TC 0080

5.0 cu in / rev

Flow (GPM)	PRESSURE (PSID) 500	750	1000	1250	1500	1750
.5	270 **14**	431 **10**	558 **8**	700 **3**		
1	289 **39**	438 **37**	585 **33**	730 **30**	871 **25**	
2	291 **86**	445 **83**	599 **78**	753 **75**	918 **70**	1037 **61**
3	284 **132**	442 **129**	600 **125**	753 **121**	903 **116**	1049 **108**
4	272 **179**	431 **176**	563 **171**	745 **167**	897 **162**	1046 **153**
5	255 **225**	414 **221**	574 **217**	730 **212**	882 **207**	1033 **198**
7	239 **315**	396 **312**	559 **306**	714 **300**	867 **294**	1021 **284**
9	226 **407**	382 **402**	547 **394**	703 **389**	855 **382**	1011 **369**

TORQUE (LB IN) 703
SPEED (RPM) 389

TC 0100

6.0 cu in / rev

Flow (GPM)	PRESSURE (PSID) 500	750	1000	1250	1500	1750
.5	319 **8**	485 **4**				
1	337 **30**	514 **26**	684 **22**	855 **18**	1022 **14**	
2	345 **67**	546 **64**	728 **61**	909 **56**	1087 **51**	1222 **44**
3	335 **108**	522 **104**	707 **100**	888 **96**	1065 **92**	1243 **84**
4	323 **146**	508 **142**	697 **139**	879 **135**	1059 **130**	1241 **123**
5	305 **185**	490 **181**	681 **177**	864 **173**	1044 **168**	1227 **161**
7	282 **261**	465 **256**	658 **251**	842 **247**	1024 **241**	1209 **232**
9	262 **337**	444 **332**	638 **326**	822 **322**	1005 **315**	1193 **304**
12	203 **448**	384 **443**	582 **438**	763 **433**	943 **427**	1121 **412**

TORQUE (LB IN) 763
SPEED (RPM) 433

☐ Cont. ☐ Int.

Intermittent operation rating applies to 10% of every minute.

Fonctionnement interm. 10% max. de chaque minute d'utilisation.

Performance data based on testing using 10W40 oil with a viscosity of 200 SUS at 54° C (130° F.). Performance data is typical. Actual data may vary slightly from one production motor to another.

Les donnees sur les performances sont basees sur des tests utilisant de l'huile 10W40 d'une viscosite de 200 SUS a 54°C (130°F). Ces donnees correspondent a des situations typiques. Les donnees reelles peuvent varier legerement d'un moteur de production a l'autre.

Intermittierende Werte maximal 10% von jeder Betriebsminute.

Capacidad de funcionamiento intermitente valida para 6 segundos por cada minuto.

Leistungsdaten sind gemessen mit SAE 10W40 bei einer Viskositaet von 43,1 Cst bei 54°C. Geringfuegige Abweichungen von den Katalogdaten sind moeglich.

Datos tecnicos obtenidos con aceite 10W40 de 200 SUS de viscosidad a 54°C (130°F). Los datos proporcionados son valores tipcos. Los valores exactos reales podrian tener una pequena variacion entre distintos motores.

WARNING
This product can expose you to chemicals including lead and DEHP, which are known to the State of California to cause cancer, and birth defects or other reproductive harm. For more information go to www.p65warnings.ca.gov

Tel: +45 63 12 83 00 | Email: ps@hymatik.com | www.hymatik.com | Hvidkaervej 27a, DK-5250 Odense SV, Denmark

TC 0130

8.0 cu in / rev PRESSURE (PSID)

	500	750	1000	1250	1500	1750
.5	447 **9**	718 **7**	921 **5**	1188 **2**		
1	472 **25**	717 **23**	960 **21**	1201 **19**	1442 **17**	
2	476 **54**	726 **52**	970 **50**	1213 **48**	1455 **45**	1698 **40**
3	461 **83**	710 **82**	961 **79**	1204 **76**	1448 **74**	1693 **70**
4	440 **112**	689 **111**	942 **108**	1188 **106**	1432 **103**	1677 **100**
5	417 **141**	663 **139**	918 **137**	1164 **135**	1408 **132**	1654 **129**
7	384 **198**	629 **195**	857 **193**	1102 **191**	1346 **188**	1597 **184**
9	308 **256**	533 **256**	792 **252**	1034 **250**	1279 **246**	1533 **241**
12	270 **342**	499 **340**	758 **337**	998 **334**	1239 **330**	1492 **324**
15	188 **428**	418 **426**	677 **422**	911 **420**	1144 **416**	1391 **412**

Flow (GPM)

TORQUE (LB IN) 1533
SPEED (RPM) 241

TC 0165

10.0 cu in / rev PRESSURE (PSID)

	500	750	1000	1250	1500	1750
.5	554 **8**	881 **6**	1130 **4**	1457 **2**		
1	594 **20**	898 **19**	1197 **17**	1492 **16**	1785 **14**	
2	605 **43**	914 **42**	1220 **41**	1526 **39**	1819 **38**	2114 **35**
3	584 **67**	899 **66**	1211 **64**	1518 **63**	1833 **61**	2109 **58**
4	554 **91**	866 **89**	1183 **89**	1491 **87**	1791 **86**	2092 **85**
5	519 **114**	827 **113**	1146 **111**	1455 **110**	1755 **109**	2057 **108**
7	477 **159**	782 **158**	1102 **156**	1408 **155**	1707 **153**	2011 **150**
9	376 **207**	671 **205**	991 **204**	1290 **202**	1587 **201**	1894 **198**
12	323 **248**	613 **247**	933 **245**	1229 **244**	1519 **243**	1833 **241**
15	194 **347**	467 **345**	786 **344**	1073 **342**	1363 **341**	1673 **340**

Flow (GPM)

TORQUE (LB IN) 1894
SPEED (RPM) 198

☐ Cont. ☐ Int.

Intermittent operation rating applies to 10% of every minute.

Fonctionnement interm. 10% max. de chaque minute d'utilisation.

Performance data based on testing using 10W40 oil with a viscosity of 200 SUS at 54° C (130° F.). Performance data is typical. Actual data may vary slightly from one production motor to another.

Les donnees sur les performances sont basees sur des tests utilisant de l'huile 10W40 d'une viscosite de 200 SUS a 54°C (130°F). Ces donnees correspondent a des situations typiques. Les donnees reelles peuvent varier legerement d'un moteur de production a l'autre.

Intermittierende Werte maximal 10% von jeder Betriebsminute.

Capacidad de funcionamiento intermitente valida para 6 segundos por cada minuto.

Leistungsdaten sind gemessen mit SAE 10W40 bei einer Viskositaet von 43,1 Cst bei 54°C. Geringfuegige Abweichungen von den Katalogdaten sind moeglich.

Datos tecnicos obtenidos con aceite 10W40 de 200 SUS de viscosidad a 54°C (130°F). Los datos proporcionados son valores tipcos. Los valores exactos reales podrian tener una pequena variacion entre distintos motores.

WARNING
This product can expose you to chemicals including lead and DEHP, which are known to the State of California to cause cancer, and birth defects or other reproductive harm. For more information go to www.p65warnings.ca.gov

Tel: +45 63 12 83 00 | Email: ps@hymatik.com | www.hymatik.com | Hvidkaervej 27a, DK-5250 Odense SV, Denmark

TC 0195

11.9 cu in / rev PRESSURE (PSID)

	500	750	1000	1250	1500	1750
.5	678 **6**	1089 **5**	1402 **3**			
1	704 **17**	1070 **15**	1439 **14**	1805 **13**	2166 **11**	
2	717 **36**	1089 **35**	1459 **33**	1824 **32**	2176 **30**	2523 **27**
3	687 **56**	1061 **55**	1427 **54**	1789 **52**	2148 **51**	2508 **48**
4	650 **75**	1019 **74**	1389 **73**	1749 **72**	2105 **70**	2463 **67**
5	614 **95**	978 **94**	1350 **92**	1708 **91**	2061 **89**	2418 **86**
7	567 **132**	925 **132**	1301 **131**	1656 **129**	2007 **127**	2365 **124**
9	452 **201**	799 **200**	1177 **199**	1526 **198**	1873 **195**	2232 **192**
12	392 **227**	732 **226**	1107 **225**	1454 **224**	1803 **221**	2163 **218**
15	249 **290**	569 **289**	944 **288**	1288 **287**	1627 **285**	1985 **282**

Flow (GPM)

TORQUE (LB IN) 2232
SPEED (RPM) 192

TC 0260

15.9 cu in / rev PRESSURE (PSID)

	500	750	950	1200	1400
.5	950 **5**	1446 **4**	1828 **3**	2307 **2**	
1	978 **13**	1473 **12**	1860 **11**	2335 **11**	2713 **10**
2	989 **27**	1489 **26**	1880 **26**	2353 **25**	2728 **24**
3	946 **42**	1449 **42**	1837 **41**	2307 **40**	2689 **39**
4	889 **57**	1382 **56**	1775 **55**	2233 **55**	2608 **54**
5	837 **71**	1316 **71**	1704 **70**	2169 **70**	2536 **69**
7	765 **100**	1235 **100**	1623 **100**	2078 **99**	2437 **98**
9	588 **130**	1016 **129**	1391 **129**	1876 **129**	2230 **128**
12	523 **155**	952 **155**	1329 **155**	1767 **154**	2131 **154**
15	357 **217**	796 **216**	1177 **216**	1611 **216**	1969 **215**

Flow (GPM)

TORQUE (LB IN) 2230
SPEED (RPM) 128

TC 0230

13.9 cu in / rev PRESSURE (PSID)

	500	750	1100	1300	1550
.5	837 **4**	1313 **3**			
1	856 **14**	1293 **12**	1892 **11**	2226 **9**	2637 **8**
2	846 **30**	1291 **29**	1888 **28**	2221 **25**	2621 **23**
3	820 **47**	1258 **46**	1853 **44**	2179 **42**	2581 **41**
4	784 **64**	1217 **63**	1809 **61**	2134 **60**	2531 **58**
5	741 **80**	1168 **79**	1760 **78**	2086 **76**	2475 **74**
7	683 **113**	1101 **112**	1692 **111**	2019 **110**	2405 **106**
9	518 **146**	908 **146**	1497 **144**	1833 **143**	2231 **140**
12	462 **176**	851 **175**	1432 **174**	1763 **173**	2153 **169**
15	337 **246**	720 **244**	1291 **243**	1604 **242**	1969 **237**

Flow (GPM)

TORQUE (LB IN) 2231
SPEED (RPM) 140

TC 0295

17.9 cu in / rev PRESSURE (PSID)

	500	850	1000	1250
.5	1037 **4**	1769 **2**		
1	1075 **11**	1834 **10**	2145 **9**	2656 **8**
2	1090 **23**	1850 **23**	2153 **22**	2656 **21**
3	1046 **36**	1807 **36**	2110 **36**	2611 **35**
4	976 **50**	1729 **49**	2040 **48**	2540 **48**
5	915 **63**	1668 **62**	1970 **61**	2468 **61**
7	837 **89**	1582 **88**	1883 **87**	2378 **87**
9	645 **115**	1349 **114**	1648 **114**	2163 **113**
12	575 **138**	1271 **137**	1569 **137**	2046 **136**
15	392 **192**	1098 **191**	1377 **191**	1831 **191**

Flow (GPM)

TORQUE (LB IN) 2163
SPEED (RPM) 113

■ Cont. □ Int.

Intermittent operation rating applies to 10% of every minute.

Fonctionnement interm. 10% max. de chaque minute d'utilisation.

Performance data based on testing using 10W40 oil with a viscosity of 200 SUS at 54° C (130° F.). Performance data is typical. Actual data may vary slightly from one production motor to another.

Les donnees sur les performances sont basees sur des tests utilisant de l'huile 10W40 d'une viscosite de 200 SUS a 54°C (130°F). Ces donnees correspondent a des situations typiques. Les donnees reelles peuvent varier legerement d'un moteur de production a l'autre.

Intermittierende Werte maximal 10% von jeder Betriebsminute.

Capacidad de funcionamiento intermitente valida para 6 segundos por cada minuto.

Leistungsdaten sind gemessen mit SAE 10W40 bei einer Viskositaet von 43,1 Cst bei 54°C. Geringfuegige Abweichungen von den Katalogdaten sind moeglich.

Datos tecnicos obtenidos con aceite 10W40 de 200 SUS de viscosidad a 54°C (130°F). Los datos proporcionados son valores tipcos. Los valores exactos reales podrian tener una pequena variacion entre distintos motores.

WARNING
This product can expose you to chemicals including lead and DEHP, which are known to the State of California to cause cancer, and birth defects or other reproductive harm. For more information go to www.p65warnings.ca.gov

Tel: +45 63 12 83 00 | Email: ps@hymatik.com | www.hymatik.com | Hvidkaervej 27a, DK-5250 Odense SV, Denmark

TC 0330

20.0 cu in / rev PRESSURE (PSID)

	250	500	750	1100
.5	580 **4**	1177 **3**		
1	603 **10**	1207 **10**	1803 **9**	2298 **7**
2	598 **22**	1232 **22**	1803 **21**	2298 **19**
3	558 **34**	1158 **33**	1757 **32**	2251 **32**
4	507 **46**	1098 **45**	1693 **44**	2195 **44**
5	458 **57**	1033 **56**	1620 **56**	2124 **55**
7	381 **80**	968 **79**	1510 **79**	2030 **79**
9	226 **103**	733 **102**	1272 **103**	1808 **103**
12		636 **123**	1163 **123**	1706 **123**
15		426 **173**	934 **172**	1485 **172**

Flow (GPM)

TORQUE (LB IN) 1808
SPEED (RPM) 103

TC 0390

24.0 cu in / rev PRESSURE (PSID)

	250	500	650	950
.5	671 **3**	1356 **2**		
1	694 **8**	1404 **8**	1825 **7**	2622 **6**
2	694 **18**	1421 **17**	1842 **17**	2604 **16**
3	648 **27**	1343 **26**	1754 **26**	2533 **26**
4	587 **38**	1264 **37**	1675 **37**	2453 **36**
5	534 **47**	1194 **47**	1595 **46**	2363 **46**
7	458 **66**	1107 **66**	1498 **66**	2265 **66**
9	282 **86**	880 **85**	1260 **85**	2016 **86**
12		819 **98**	1195 **98**	1942 **98**
15		540 **144**	908 **143**	1623 **144**

Flow (GPM)

TORQUE (LB IN) 2016
SPEED (RPM) 86

TC 0365

22.6 cu in / rev PRESSURE (PSID)

	250	500	650	950
.5	603 **4**	1260 **3**	1689 **2**	2529 **1**
1	636 **9**	1316 **8**	1745 **8**	2542 **7**
2	637 **19**	1351 **18**	1772 **18**	2551 **17**
3	587 **30**	1264 **29**	1684 **28**	2479 **28**
4	542 **40**	1212 **39**	1622 **39**	2408 **39**
5	484 **50**	1138 **50**	1550 **50**	2331 **49**
7	419 **71**	1055 **70**	1463 **70**	2239 **70**
9	259 **91**	793 **91**	1199 **91**	2025 **91**
12		741 **108**	1155 **108**	1962 **108**
15		619 **152**	1058 **152**	1828 **152**

Flow (GPM)

TORQUE (LB IN) 2025
SPEED (RPM) 91

▒ Cont. ☐ Int.

Intermittent operation rating applies to 10% of every minute.

Fonctionnement interm. 10% max. de chaque minute d'utilisation.

Performance data based on testing using 10W40 oil with a viscosity of 200 SUS at 54° C (130° F.). Performance data is typical. Actual data may vary slightly from one production motor to another.

Les donnees sur les performances sont basees sur des tests utilisant de l'huile 10W40 d'une viscosite de 200 SUS a 54°C (130°F). Ces donnees correspondent a des situations typiques. Les donnees reelles peuvent varier legerement d'un moteur de production a l'autre.

Intermittierende Werte maximal 10% von jeder Betriebsminute.

Capacidad de funcionamiento intermitente valida para 6 segundos por cada minuto.

Leistungsdaten sind gemessen mit SAE 10W40 bei einer Viskositaet von 43,1 Cst bei 54°C. Geringfuegige Abweichungen von den Katalogdaten sind moeglich.

Datos tecnicos obtenidos con aceite 10W40 de 200 SUS de viscosidad a 54°C (130°F). Los datos proporcionados son valores tipcos. Los valores exactos reales podrian tener una pequena variacion entre distintos motores.

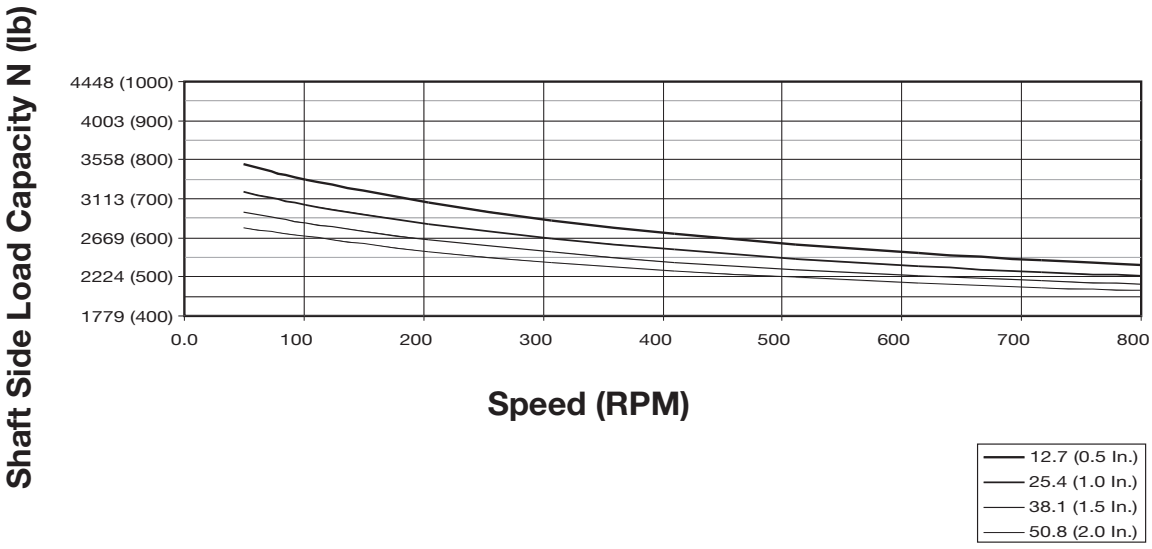

The allowable side load curve is based on bushing life of 2.5 x 10^6 revolutions.
Die zulaessige radiale Wellenbelastung bezieht sich auf die Lager-Lebensdauer 2,5 x 10^6 Umdrehungen.
L'effort radial admissible sur l'arbre depend a une duree de vie 2,5 x 10^6 de rotation.
La curva de carga lateral admisible se basa en vida util de cojinete de 2.5 x 10 revoluciones.

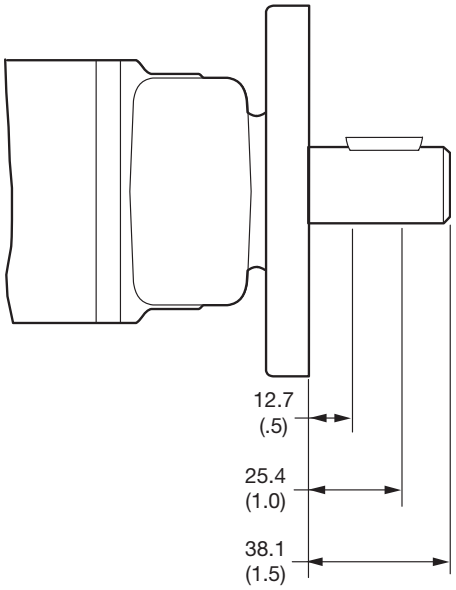

English equivalents for metric specifications are shown in ( ).

WARNING
This product can expose you to chemicals including lead and DEHP, which are known to the State of California to cause cancer, and birth defects or other reproductive harm. For more information go to www.p65warnings.ca.gov

Tel: +45 63 12 83 00 | Email: ps@hymatik.com | www.hymatik.com | Hvidkaervej 27a, DK-5250 Odense SV, Denmark

Code: AM

SAE "A" 2 Bolt, 5/16-18 UNC Manifold

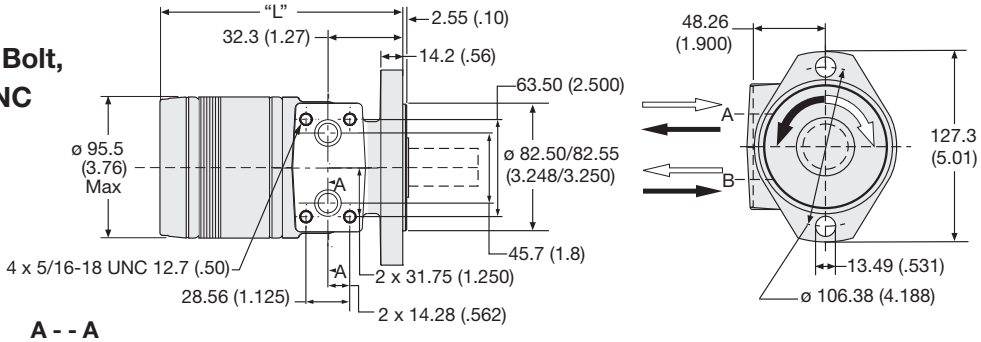

A - - A

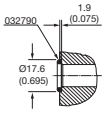

Motor with manifold mount is supplied with 2 O-rings.
Zum Motor mit Universalanschluß werden 2 O-Ringe geliefert.
Deux joints toriques sont livrés avec les moteurs a plan de raccordement universel.
Il blocchetto connessioni è corredato da 2 OR.

Code AM disp.	0036	0045	0050	0065	0080	0100	0130	0165	0195	0230	0260	0295	0330	0365	0390
Weight/Gewicht kg	**5.38**	**5.46**	**5.54**	**5.67**	**5.81**	**5.88**	**6.19**	**6.45**	**6.74**	**6.93**	**7.23**	**7.39**	**7.71**	**8.09**	**8.21**
Poids/Peso (lb)	(11.8)	(12.0)	(12.2)	(12.5)	(12.8)	(13.0)	(13.6)	(14.2)	(14.9)	(15.3)	(15.9)	(16.3)	(17.0)	(17.8)	(18.1)
Length "L" mm	**119.1**	**120.1**	**121.6**	**124.8**	**127.9**	**131.1**	**137.5**	**143.8**	**150.2**	**156.5**	**162.9**	**169.2**	**175.6**	**184.2**	**188.3**
"L" (in)	(4.69)	(4.73)	(4.79)	(4.91)	(5.04)	(5.16)	(5.41)	(5.66)	(5.91)	(6.16)	(6.41)	(6.66)	(6.91)	(7.25)	(7.41)

Code: AP

SAE "A" 2 Bolt, 1/2-14 NPTF

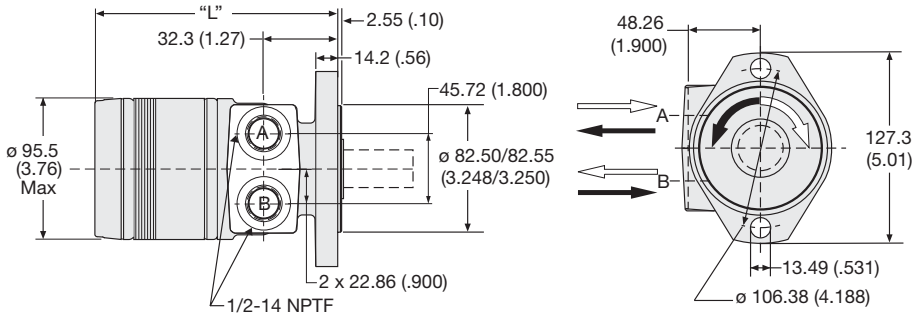

Code AP disp.	0036	0045	0050	0065	0080	0100	0130	0165	0195	0230	0260	0295	0330	0365	0390
Weight/Gewicht kg	**5.38**	**5.46**	**5.54**	**5.67**	**5.81**	**5.88**	**6.19**	**6.45**	**6.74**	**6.93**	**7.23**	**7.39**	**7.71**	**8.09**	**8.21**
Poids/Peso (lb)	(11.8)	(12.0)	(12.2)	(12.5)	(12.8)	(13.0)	(13.6)	(14.2)	(14.9)	(15.3)	(15.9)	(16.3)	(17.0)	(17.8)	(18.1)
Length "L" mm	**119.1**	**120.1**	**121.6**	**124.8**	**127.9**	**131.1**	**137.5**	**143.8**	**150.2**	**156.5**	**162.9**	**169.2**	**175.6**	**184.2**	**188.3**
"L" (in)	(4.69)	(4.73)	(4.79)	(4.91)	(5.04)	(5.16)	(5.41)	(5.66)	(5.91)	(6.16)	(6.41)	(6.66)	(6.91)	(7.25)	(7.41)

English equivalents for metric specifications are shown in ( ).

WARNING
This product can expose you to chemicals including lead and DEHP, which are known to the State of California to cause cancer, and birth defects or other reproductive harm. For more information go to www.p65warnings.ca.gov

Tel: +45 63 12 83 00 | Email: ps@hymatik.com | www.hymatik.com | Hvidkaervej 27a, DK-5250 Odense SV, Denmark

Code: AS

SAE "A" 2 Bolt, 7/8-14 SAE

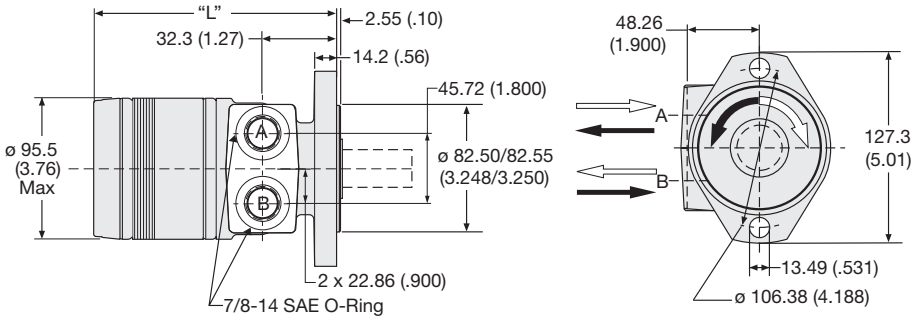

Code AS disp.	0036	0045	0050	0065	0080	0100	0130	0165	0195	0230	0260	0295	0330	0365	0390
Weight/Gewicht kg	**5.38**	**5.46**	**5.54**	**5.67**	**5.81**	**5.88**	**6.19**	**6.45**	**6.74**	**6.93**	**7.23**	**7.39**	**7.71**	**8.09**	**8.21**
Poids/Peso (lb)	(11.8)	(12.0)	(12.2)	(12.5)	(12.8)	(13.0)	(13.6)	(14.2)	(14.9)	(15.3)	(15.9)	(16.3)	(17.0)	(17.8)	(18.1)
Length "L" mm	**119.1**	**120.1**	**121.6**	**124.8**	**127.9**	**131.1**	**137.5**	**143.8**	**150.2**	**156.5**	**162.9**	**169.2**	**175.6**	**184.2**	**188.3**
"L" (in)	(4.69)	(4.73)	(4.79)	(4.91)	(5.04)	(5.16)	(5.41)	(5.66)	(5.91)	(6.16)	(6.41)	(6.66)	(6.91)	(7.25)	(7.41)

Code: FM

4 Bolt w/3/8-16 Thd, 5/16-18 UNC Manifold

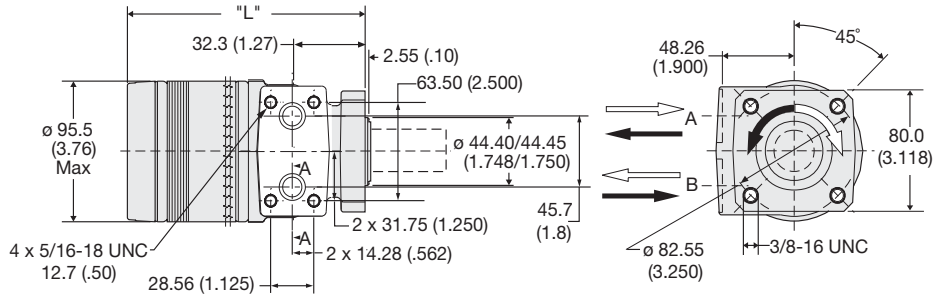

A - -A

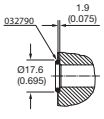

Motor with manifold mount is supplied with 2 O-rings.
Zum Motor mit Universalanschluß werden 2 O-Ringe geliefert.
Deux joints toriques sont livrés avec les moteurs a plan de raccordement universel.
Il blocchetto connessioni è corredato da 2 OR.

Code FM disp.	0036	0045	0050	0065	0080	0100	0130	0165	0195	0230	0260	0295	0330	0365	0390
Weight/Gewicht kg	**5.91**	**6.03**	**6.12**	**6.26**	**6.35**	**6.49**	**6.76**	**7.03**	**7.35**	**7.58**	**7.80**	**8.07**	**8.35**	**8.66**	**8.80**
Poids/Peso (lb)	(13.1)	(13.3)	(13.5)	(13.8)	(14.0)	(14.3)	(14.9)	(15.5)	(16.2)	(16.7)	(17.2)	(17.8)	(18.4)	(19.1)	(19.4)
Length "L" mm	**119.1**	**120.1**	**121.6**	**124.8**	**127.9**	**131.1**	**137.5**	**143.8**	**150.2**	**156.5**	**162.9**	**169.2**	**175.6**	**184.2**	**188.3**
"L" (in)	(4.69)	(4.73)	(4.79)	(4.91)	(5.04)	(5.16)	(5.41)	(5.66)	(5.91)	(6.16)	(6.41)	(6.66)	(6.91)	(7.25)	(7.41)

English equivalents for metric specifications are shown in ( ).

WARNING
This product can expose you to chemicals including lead and DEHP, which are known to the State of California to cause cancer, and birth defects or other reproductive harm. For more information go to www.p65warnings.ca.gov

Tel: +45 63 12 83 00 | Email: ps@hymatik.com | www.hymatik.com | Hvidkaervej 27a, DK-5250 Odense SV, Denmark

Code: FP

4 Bolt w/3/8-16 Thd, 1/2-14 NPTF

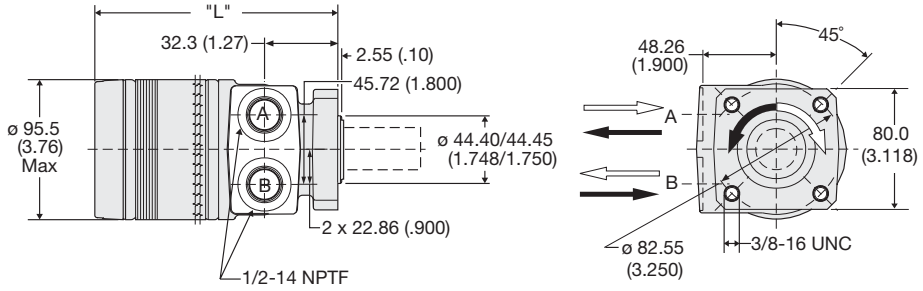

Code FP disp.	0036	0045	0050	0065	0080	0100	0130	0165	0195	0230	0260	0295	0330	0365	0390
Weight/Gewichtkg	**5.91**	**6.03**	**6.12**	**6.26**	**6.35**	**6.49**	**6.76**	**7.03**	**7.35**	**7.58**	**7.80**	**8.07**	**8.35**	**8.66**	**8.80**
Poids/Peso (lb)	(13.1)	(13.3)	(13.5)	(13.8)	(14.0)	(14.3)	(14.9)	(15.5)	(16.2)	(16.7)	(17.2)	(17.8)	(18.4)	(19.1)	(19.4)
Length "L" mm	**119.1**	**120.1**	**121.6**	**124.8**	**127.9**	**131.1**	**137.5**	**143.8**	**150.2**	**156.5**	**162.9**	**169.2**	**175.6**	**184.2**	**188.3**
"L" (in)	(4.69)	(4.73)	(4.79)	(4.91)	(5.04)	(5.16)	(5.41)	(5.66)	(5.91)	(6.16)	(6.41)	(6.66)	(6.91)	(7.25)	(7.41)

Code: FS

4 Bolt w/3/8-16 Thd, 7/8-14 SAE

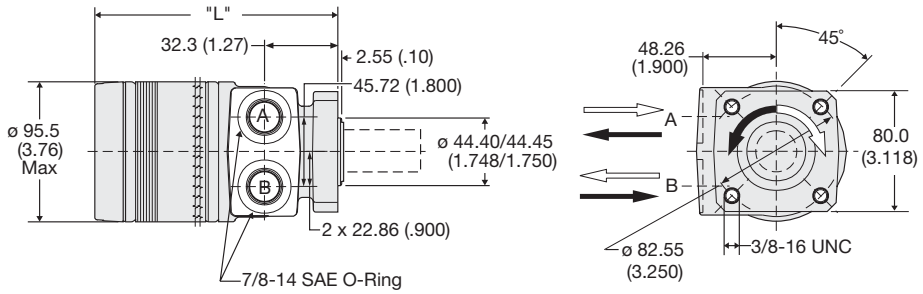

Code FS disp.	0036	0045	0050	0065	0080	0100	0130	0165	0195	0230	0260	0295	0330	0365	0390
Weight/Gewichtkg	**5.91**	**6.03**	**6.12**	**6.26**	**6.35**	**6.49**	**6.76**	**7.03**	**7.35**	**7.58**	**7.80**	**8.07**	**8.35**	**8.66**	**8.80**
Poids/Peso (lb)	(13.1)	(13.3)	(13.5)	(13.8)	(14.0)	(14.3)	(14.9)	(15.5)	(16.2)	(16.7)	(17.2)	(17.8)	(18.4)	(19.1)	(19.4)
Length "L" mm	**119.1**	**120.1**	**121.6**	**124.8**	**127.9**	**131.1**	**137.5**	**143.8**	**150.2**	**156.5**	**162.9**	**169.2**	**175.6**	**184.2**	**188.3**
"L" (in)	(4.69)	(4.73)	(4.79)	(4.91)	(5.04)	(5.16)	(5.41)	(5.66)	(5.91)	(6.16)	(6.41)	(6.66)	(6.91)	(7.25)	(7.41)

English equivalents for metric specifications are shown in ( ).

WARNING
This product can expose you to chemicals including lead and DEHP, which are known to the State of California to cause cancer, and birth defects or other reproductive harm. For more information go to www.p65warnings.ca.gov

Tel: +45 63 12 83 00 | Email: ps@hymatik.com | www.hymatik.com | Hvidkaervej 27a, DK-5250 Odense SV, Denmark

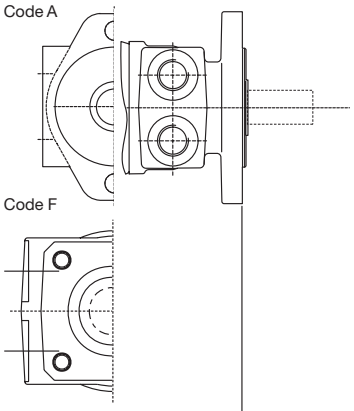

Code: 09

1" Straight with 0.38" Crosshole

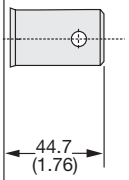

Code: 10

1" Keyed

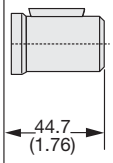

Code: 11

1" 6B Spline

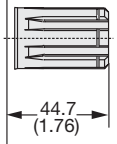

Code: 13

Long 1" Keyed

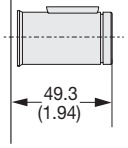

English equivalents for metric specifications are shown in ( ).

WARNING
This product can expose you to chemicals including lead and DEHP, which are known to the State of California to cause cancer, and birth defects or other reproductive harm. For more information go to www.p65warnings.ca.gov

Tel: +45 63 12 83 00 | Email: ps@hymatik.com | www.hymatik.com | Hvidkaervej 27a, DK-5250 Odense SV, Denmark

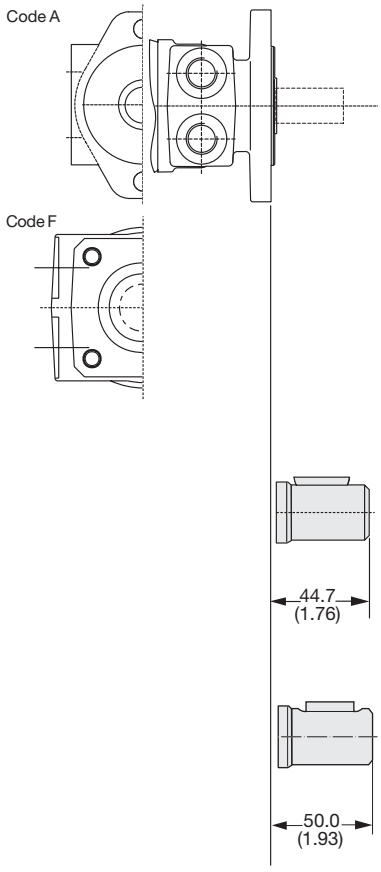

Code: 21

1” Keyed
Corrosion Resistant

Code: 26

25mm Keyed
with 8mm Key

English equivalents for metric specifications are shown in ( ).

WARNING
This product can expose you to chemicals including lead and DEHP, which are known to the State of California to cause cancer, and birth defects or other reproductive harm. For more information go to www.p65warnings.ca.gov

Parker Hannifin Corporation
Pump & Motor Division
Greeneville, Tennessee, USA

Tel: +45 63 12 83 00 | Email: ps@hymatik.com | www.hymatik.com | Hvidkaervej 27a, DK-5250 Odense SV, Denmark

Code: 09

1" Straight with 0.38" Crosshole



Code: 10

1" Keyed

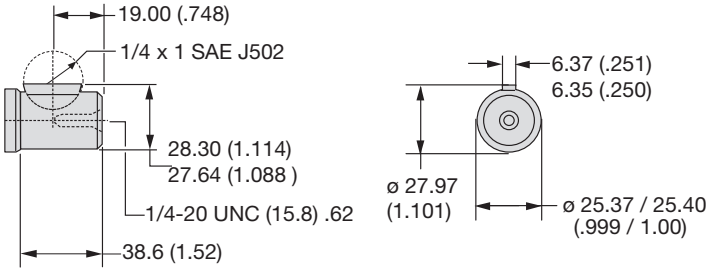

Code: 11

1" 6B Spline

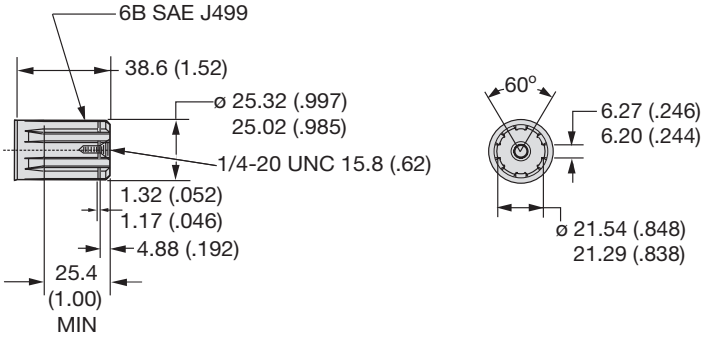

Code: 13

Long 1" Keyed

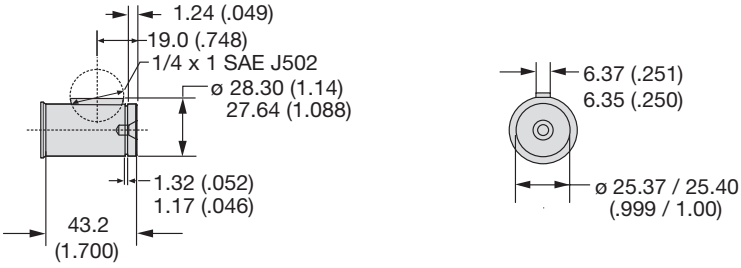

English equivalents for metric specifications are shown in ( ).

WARNING
This product can expose you to chemicals including lead and DEHP, which are known to the State of California to cause cancer, and birth defects or other reproductive harm. For more information go to www.p65warnings.ca.gov

Tel: +45 63 12 83 00 | Email: ps@hymatik.com | www.hymatik.com | Hvidkaervej 27a, DK-5250 Odense SV, Denmark

Code: 21
1” Keyed
Corrosion Resistant

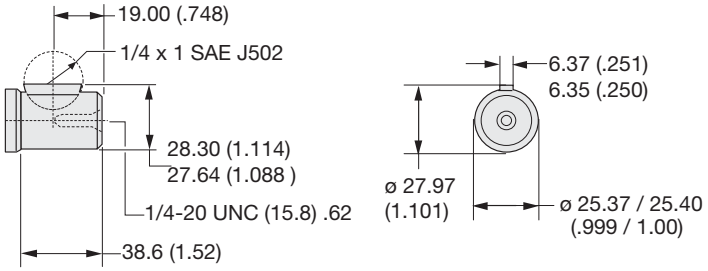

Code: 26

25mm Keyed
with 8mm Key

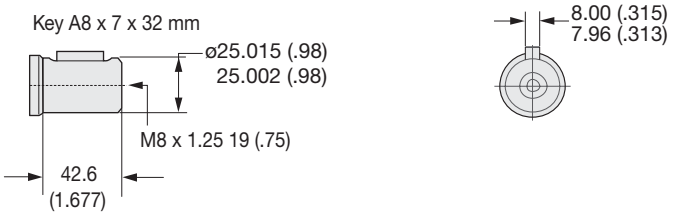

English equivalents for metric specifications are shown in ( ).

WARNING
This product can expose you to chemicals including lead and DEHP, which are known to the State of California to cause cancer, and birth defects or other reproductive harm. For more information go to www.p65warnings.ca.gov

Notes

WARNING
This product can expose you to chemicals including lead and DEHP, which are known to the State of California to cause cancer, and birth defects or other reproductive harm. For more information go to www.p65warnings.ca.gov

Tel: +45 63 12 83 00 | Email: ps@hymatik.com | www.hymatik.com | Hvidkaervej 27a, DK-5250 Odense SV, Denmark

15 Displacements	(2.2 – 24.0 in³/rev)
15 Schluckvolumen	**36 . . . 390 cm³/rev**
15 Cylindrée	
15 Despazamientos	

	Cont	**Int**
Maximum Pressure	(1800 psid)	(2400 psid)
Eingangsdruck	**. . .125 bar**	**. . .165 bar**
Chaute de pression max.		
Presion Maxima		

Maximum Oil Flow	(15 gpm)
Schluckstrom	**. . . 57 lpm**
Débit d'huile	
Caudal Maximo de Aceite	

Maximum Speed	(932 rpm)
Drehzahl	**932 rpm**
Vitesse de rotation	
Velocidad Maxima	

	Cont	**Int**
Maximum Torque	(3897 lb in)	(4783 lb in)
Max Drehmoment	**440 Nm**	**540 Nm**
Couple Maxi		
Torque Maximo		

Maximum Side Load at Key	(1100 lb)
Seitenlast	**. . . 4900 N**
Charges latèrales	
Carga Maxima Lateral	

A Light Duty Low Speed, High Torque Motor

This light duty motor incorporates all the features of heavy duty motors. Design features include a high pressure shaft seal so external drains are never required, roller vane technology for automatic wear compensation, and full flow internal cooling and flushing. This is a very economical motor for most light to medium duty applications.



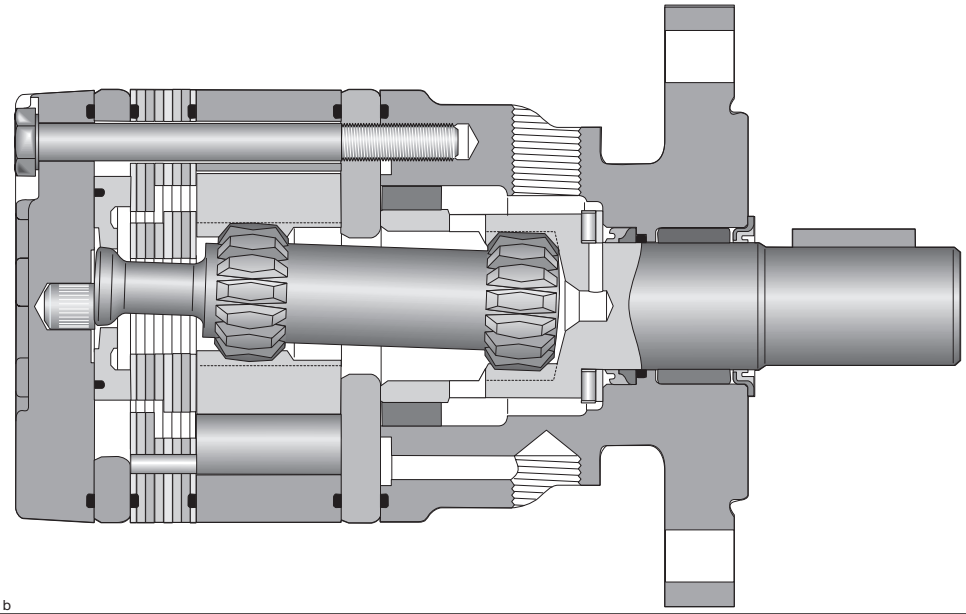

002 TB.indd, b

WARNING
This product can expose you to chemicals including lead and DEHP, which are known to the State of California to cause cancer, and birth defects or other reproductive harm. For more information go to www.p65warnings.ca.gov

Tel: +45 63 12 83 00 | Email: ps@hymatik.com | www.hymatik.com | Hvidkaervej 27a, DK-5250 Odense SV, Denmark

TB

Series

XXXX

Displacement
Schluckvolumen
Cylindrée
Desplazamiento

Code	cm³/U cm³/tr cm³/giro	in³/rev
0036	36	2.2
0045	41	2.5
0050	49	3.0
0065	65	4.0
0080	82	5.0
0100	98	6.0
0130	130	8.0
0165	163	10.0
0195	195	11.9
0230	228	13.9
0260	260	15.9
0295	293	17.9
0330	328	20.0
0365	370	22.6
0390	392	24.0

XX

Mounting/Ports
Gehäuse/Anschluß
Carter/Plan de raccordement
Montaje/Lumbreras

Code	Mounting/Ports	
AM	SAE "A" 2 Bolt, 5/16-18 UNC Manifold	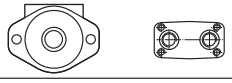
AP	SAE "A" 2 Bolt, 1/2-14 NPTF	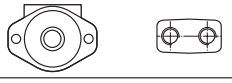
AS	SAE "A" 2 Bolt, 7/8-14 SAE	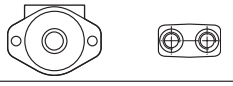
BM	SAE "B" 2 Bolt, 5/16-18 UNC Manifold	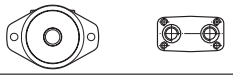
FP	4 Bolt w/3/8-16 UNC, 1/2-14 NPTF	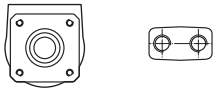
FS	4 Bolt w/3/8-16 UNC, 7/8-14 SAE	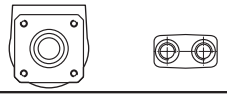
Custom Order		
AR	SAE "A" 2 Bolt, 3/4-16 SAE O-ring Axial Rear Port	
FJ	4 Bolt Mt., 9/16 O-ring (SAE # 6)	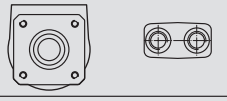
FM	4 Bolt w/3/8-16 UNC, 5/16-18 UNC Manifold	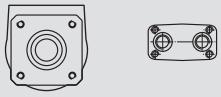
FR	4 Bolt w/3/8-16 UNC, 3/4-16 SAE O-ring Axial Rear Port	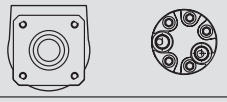
GM	4 Bolt Mt., Manifold w/Machined SS Boss	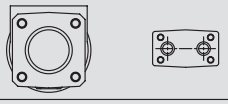
MM	Standard Mt., Manifold	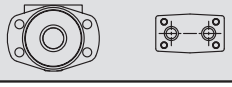

Shaded areas indicate custom order components. Standard pricing and delivery terms may not apply to these components. Please refer to the price list for details, or consult your Parker Pump Motor division Sales Resource.

Ordering Information / Bestellschlüssel
System de Commande / Imformacion para pedidos

LSHT Torqmotors™ and Nichols™ Motors
TB Series / Serie / Série HY13-1590-011/US,EU

XX

Shaft
Welle
Arbre
Eje

Code	Shaft
10	1" Keyed 
11	1" 6B Spline 
13	Long 1" Keyed 
25	1" Tapered 
33	1" Tapered, 3/16 Key, 3/4-16 Thd. 
59*	7/8" 13 Tooth Spline SAE 

Custom Order		
	09	1" Straight w/0.38" Crosshole 
	21	1" Keyed; Corrosion Resistant 
	28	7/8" 13 Tooth Spline 
	34	Special 13 Tooth (Dbl. Seal) 

* Conforms to SAE B recommended length

0

Rotation
Drehrichtung
Direction de rotation
Rotacion

Code	Rotation
0	Standard 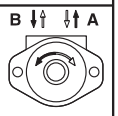
1	Reverse Timed Manifold 

Code	Rear Port Rotation
0	Standard 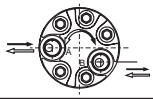
1	Reverse Timed Manifold 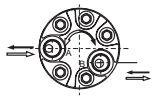

Rotation viewed from shaft end.

XXXX

Options
Opciones

Code	Options
AAAA[8]	"Standard", Black Paint
AAAB	"Standard", No Paint
AAAC[8]	"Standard", Double Paint
AABJ[1,8]	Free Running Rotor Set, Black Paint
AABT[4,8]	No Nut, Black Paint
AAFA	Fluorocarbon Seals, High Temp Commutator Seal, High Temp Section seals, No Paint
AAFW[8]	Fluorocarbon Seals, High Temp Commutator Seal, High Temp Section Seals, Black Paint
AAJH[4,8]	No Shaft Hardware, Fluorocarbon Seals, High Temp Commutator Seal, High Temp Section Seals, Spl paint area Black Paint
AAJL[4]	No Nut, No Paint
AAUP[4]	Fluorocarbon Seals, High Temp Commutator Seal, High Temp Section Seals, No Shaft Hardware, No Paint
AAVE[1,8]	Free Running Rotor Set, Fluorocarbon Seals, High Temp High Temp Section Seals, Commutator Seal, Black Paint
ABCW[4,5,8]	No Shaft Hardware, Fluorocarbon Seals, High T emperature Commutator Seal, High Temp Section Seals, Bidirectional shuttle (.062 Orifice) (11:00*), Black Paint
ABCZ[8]	Fluorocarbon Seals, Double paint, High Temp Commutator Seal, High Temp Section Seals
BBGS[4,5,8]	No Shaft Hardware, Fluorocarbon Seals, High Temperature Commutator Seal, High Temp Section Seals, 921 PSI Int Bidirectional Relief, Black Paint
BBGT[2,4,5,8]	No Shaft Hardware, Fluorocarbon Seals, High Temperature Commutator Seal, High Temp Section Seals, 1200 PSI Int Bidirectional Relief, Black Paint
BBGU[3,4,5,8]	No Shaft Hardware, Fluorocarbon Seals, High Temperature Commutator Seal, High Temp Section Seals, 2030 PSI Int Bidirectional Relief, Black Paint
BBGW[3,8]	No Shaft Hardware, Fluorocarbon Seals, High Temperature Commutator Seal, 1450 PSI Int Bidirectional Relief, Black Paint
BBHB[4,5,7,8]	No Shaft Hardware, Fluorocarbon Seals, High Temperature Commutator Seal, 2393 PSI Int Bidirectional Relief, Black Paint
FSEK[4,6,8]	No Shaft Hardware, Fluorocarbon Seals, High Temperature Commutator Seal, High Temp Section Seals, Parker ECD Speed Sensor, Black Paint
FSEN[4,6]	No Shaft Hardware, Fluorocarbon Seals, High Temperature Commutator Seal, High Temp Section Seals, Parker ECD Speed Sensor, No Paint

[1] Not applicable to 0365 & 0390 displacements
[2] Not applicable to 0330, 0365 or 0390 displacements
[3] Not applicable to 0230, 0295, 0330, 0365 or 0390 displacements
[4] No Nut with shaft code 25 or 33
[5] Not applicable with FR or AR Mounting / Porting options
[6] Not applicable with shaft code 33 or 65
[7] Not applicable to 0165, 0195, 0230, 0260, 0295, 0330, 0365 or 0390
[8] Paint area all over except front and rear pilot and mounting flanges and shaft

Shaded areas indicate custom order components. Standard pricing and delivery terms may not apply to these components. Please refer to the price list for details, or consult your Parker Pump Motor division Sales Resource.

WARNING
This product can expose you to chemicals including lead and DEHP, which are known to the State of California to cause cancer, and birth defects or other reproductive harm. For more information go to www.p65warnings.ca.gov

Tel: +45 63 12 83 00 | Email: ps@hymatik.com | www.hymatik.com | Hvidkaervej 27a, DK-5250 Odense SV, Denmark

Performance Data / Leistungsdaten
Puissance / Datos Tecnicos

LSHT Torqmotors™ and Nichols™ Motors
TB Series / Serie / Série HY13-1590-011/US,EU

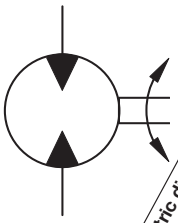

Motor Series TB	Geometric displacement Geom. Schluckvolumen Cylindrée Desplazamientos cm³/rev in³/rev	Max. speed @ Max. intermittent flow Max. Drehzahl Intermittierender Betrieb: Vitesse de rotation maxi Velocidad maxima a caudal intermitente maximo rev/min	Max. oil flow Max. Schluckstrom Débit d'huile maxi Caudal Maximo de Aceite cont / int* l/min g/min		Max. Differential Pressure Max. Druckgefälle Chute de pression maxi Presion diferencial maxima cont / int* bar psid		Max. supply pressure Max. Eingangsdruck Pression maxi entrée Presion maxima de alimentacion max bar psig	Max. torque Max. Drehmoment Couple maxi Torque Maximo cont / int* Nm lb-in		Max. performance Max. Leistungsabgabe Puissance de sortie maxi Maximo redinmiento max KW HP	Min. starting torque Min. Anlaufmoment Couple min. fourni au dé manrage Torque minimo de arranque cont / int* Nm lb-in	
TB 0036	**36** 2.2	932	34 9	34 9	**125** 1800	**165** 2400	**190** 2750	**48** 427	**67** 596	**6.6** 8.8	**44** 385	**50** 440
TB 0045	**41** 2.5	805	34 9	34 9	**125** 1800	**165** 2400	**190** 2750	**64** 526	**88** 731	**7.2** 9.7	**46** 403	**52** 461
TB 0050	**49** 3.0	678	34 9	34 9	**125** 1800	**165** 2400	**190** 2750	**78** 693	**107** 946	**7.5** 10.1	**62** 542	**70** 619
TB 0065	**65** 4.0	511	34 9	34 9	**125** 1800	**165** 2400	**190** 2750	**107** 946	**145** 1284	**7.8** 10.4	**66** 582	**99** 977
TB 0080	**82** 5.0	409	34 9	34 9	**125** 1800	**165** 2400	**190** 2750	**135** 1193	**184** 1624	**7.8** 10.5	**92** 816	**139** 1226
TB 0100	**98** 6.0	454	45 12	45 12	**125** 1800	**165** 2400	**190** 2750	**159** 1411	**217** 1917	**10.2** 13.8	**119** 1050	**158** 1400
TB 0130	**130** 8.0	430	45 12	57 15	**125** 1800	**165** 2400	**190** 2750	**220** 1951	**297** 2632	**13.4** 18.0	**167** 1482	**229** 2024
TB 0165	**163** 10.0	343	45 12	57 15	**125** 1800	**155** 2250	**190** 2750	**273** 2418	**346** 3062	**12.4** 16.7	**199** 1760	**263** 2331
TB 0195	**195** 11.9	287	45 12	57 15	**125** 1800	**145** 2100	**190** 2750	**340** 3011	**400** 3537	**12.0** 16.1	**270** 2388	**325** 2872
TB 0230	**228** 13.9	246	45 12	57 15	**103** 1500	**138** 2000	**190** 2750	**316** 2797	**427** 3782	**11.0** 14.8	**261** 2354	**353** 3121
TB 0260	**260** 15.9	216	45 12	57 15	**100** 1450	**131** 1900	**190** 2750	**350** 3096	**465** 4117	**10.5** 14.1	**291** 2573	**395** 3498
TB 0295	**293** 17.9	191	45 12	57 15	**97** 1400	**125** 1800	**190** 2750	**383** 3391	**499** 4415	**10.0** 13.4	**308** 2724	**400** 3544
TB 0330	**328** 20.0	171	45 12	57 15	**93** 1350	**114** 1650	**190** 2750	**413** 3657	**509** 4505	**9.1** 12.2	**332** 2942	**406** 3590
TB 0365	**370** 22.6	151	45 12	57 15	**86** 1250	**105** 1525	**190** 2750	**440** 3897	**540** 4783	**8.7** 11.6	**372** 3296	**454** 4021
TB 0390	**392** 24.0	143	45 12	57 15	**83** 1200	**100** 1450	**190** 2750	**428** 3792	**525** 4642	**7.8** 10.5	**339** 3003	**434** 3845

Performance data based on testing using 10W40 oil with a viscosity of 43,1 cSt. (200 SUS) at 54° C (130° F.). Performance data is typical. Actual data may vary slightly from one production motor to another.

Les donnees sur les performances sont basees sur des tests utilisant de l'huile 10W40 d'une viscosite de 200 SUS a 54°C (130°F). Ces donnees correspondent a des situations typiques. Les donnees reelles peuvent varier legerement d'un moteur de production a l'autre.

Leistungsdaten sind gemessen mit SAE 10W40 bei einer Viskositaet von 43,1 Cst bei 54°C. Geringfuegige Abweichungen von den Katalogdaten sind moeglich.

Datos tecnicos obtenidos con aceite 10W40 de 200 SUS de viscosidad a 54°C (130°F). Los datos proporcionados son valores tipcos. Los valores exactos reales podrian tener una pequena variacion entre distintos motores.

* Intermittent operation rating applies to 10% of every minute.
Intermittierende Werte maximal 10% von jeder Betriebsminute.
Fonctionnement interm. 10% max. de chaque minute d`utilisation.
Capacidad de funcionamiento intermitente valida para 10% por cada minuto.

WARNING
This product can expose you to chemicals including lead and DEHP, which are known to the State of California to cause cancer, and birth defects or other reproductive harm. For more information go to www.p65warnings.ca.gov

Tel: +45 63 12 83 00 | Email: ps@hymatik.com | www.hymatik.com | Hvidkaervej 27a, DK-5250 Odense SV, Denmark

TB 0036

2.2 cu in / rev

Flow (GPM)	PRESSURE (PSID) 500	1000	1500	1800	2000	2400
.5	108 **45**	223 **37**	343 **26**	418 **19**	468 **15**	570 **8**
1	114 **97**	234 **88**	357 **77**	431 **70**	481 **66**	581 **57**
2	112 **202**	235 **191**	361 **179**	440 **172**	492 **168**	598 **158**
3	113 **307**	241 **295**	370 **282**	450 **274**	503 **269**	610 **258**
4	109 **411**	241 **398**	373 **384**	455 **376**	509 **370**	620 **358**
5	104 **515**	237 **501**	371 **486**	453 **477**	509 **471**	621 **459**
7	87 **724**	225 **708**	360 **691**	443 **681**	498 **674**	613 **660**
9	71 **932**	208 **915**	344 **896**	427 **884**	483 **876**	598 **860**

TORQUE (LB IN) 427
SPEED (RPM) 884

TB 0050

3.0 cu in / rev

Flow (GPM)	PRESSURE (PSID) 500	1000	1500	1800	2000	2400
.5	144 **26**	319 **13**				
1	154 **65**	338 **50**	518 **35**	625 **28**	697 **21**	840 **9**
2	163 **141**	360 **127**	555 **110**	671 **102**	746 **94**	875 **80**
3	161 **218**	358 **203**	557 **186**	675 **177**	753 **169**	907 **153**
4	160 **295**	361 **279**	567 **261**	691 **251**	774 **243**	931 **227**
5	155 **371**	358 **355**	566 **337**	693 **326**	777 **317**	946 **301**
7	143 **525**	346 **507**	558 **487**	686 **474**	772 **466**	946 **448**
9	133 **678**	336 **658**	546 **638**	675 **623**	761 **614**	936 **595**

TORQUE (LB IN) 675
SPEED (RPM) 623

TB 0045

2.5 cu in / rev

Flow (GPM)	PRESSURE (PSID) 500	1000	1500	1800	2000	2400
.5	116 **31**	263 **17**				
1	124 **76**	276 **61**	427 **43**	518 **36**	579 **29**	706 **18**
2	134 **167**	294 **149**	453 **131**	547 **121**	609 **113**	723 **97**
3	132 **256**	293 **239**	455 **220**	553 **210**	617 **200**	746 **183**
4	132 **344**	296 **326**	465 **307**	567 **295**	635 **285**	769 **268**
5	128 **433**	294 **414**	465 **393**	569 **380**	639 **370**	779 **352**
7	117 **609**	284 **589**	458 **566**	564 **551**	635 **540**	779 **520**
9	107 **785**	275 **764**	449 **739**	555 **722**	627 **710**	770 **689**

TORQUE (LB IN) 555
SPEED (RPM) 722

■ Cont. □ Int.

Intermittent operation rating applies to 10% of every minute.

Fonctionnement interm. 10% max. de chaque minute d'utilisation.

Performance data based on testing using 10W40 oil with a viscosity of 200 SUS at 54° C (130° F.). Performance data is typical. Actual data may vary slightly from one production motor to another.

Les donnees sur les performances sont basees sur des tests utilisant de l'huile 10W40 d'une viscosite de 200 SUS a 54°C (130°F). Ces donnees correspondent a des situations typiques. Les donnees reelles peuvent varier legerement d'un moteur de production a l'autre.

Intermittierende Werte maximal 10% von jeder Betriebsminute.

Capacidad de funcionamiento intermitente valida para 6 segundos por cada minuto.

Leistungsdaten sind gemessen mit SAE 10W40 bei einer Viskositaet von 43,1 Cst bei 54°C. Geringfuegige Abweichungen von den Katalogdaten sind moeglich.

Datos tecnicos obtenidos con aceite 10W40 de 200 SUS de viscosidad a 54°C (130°F). Los datos proporcionados son valores tipcos. Los valores exactos reales podrian tener una pequena variacion entre distintos motores.

WARNING
This product can expose you to chemicals including lead and DEHP, which are known to the State of California to cause cancer, and birth defects or other reproductive harm. For more information go to www.p65warnings.ca.gov

Tel: +45 63 12 83 00 | Email: ps@hymatik.com | www.hymatik.com | Hvidkaervej 27a, DK-5250 Odense SV, Denmark

TB 0065

4.0 cu in / rev

Flow (GPM)	PRESSURE (PSID) 500	1000	1500	1800	2000	2400
.5	213 **22**	459 **14**	709 **6**			
1	224 **51**	479 **42**	734 **34**	887 **29**	989 **25**	1193 **17**
2	233 **108**	500 **99**	767 **90**	926 **85**	1033 **81**	1228 **71**
3	231 **166**	498 **156**	769 **147**	932 **141**	1039 **136**	1252 **126**
4	229 **224**	501 **214**	778 **203**	945 **197**	1056 **192**	1272 **181**
5	223 **281**	497 **271**	777 **260**	946 **252**	1058 **247**	1284 **237**
7	206 **396**	481 **385**	764 **372**	936 **364**	1050 **359**	1280 **347**
9	192 **511**	467 **499**	749 **485**	920 **476**	1035 **470**	1267 **457**

TORQUE (LB IN) 920
SPEED (RPM) 476

TB 0080

5.0 cu in / rev

Flow (GPM)	PRESSURE (PSID) 500	1000	1500	1800	2000	2400
.5	256 **17**	562 **10**	877 **4**			
1	269 **40**	585 **33**	905 **26**	1097 **21**	1226 **18**	1487 **10**
2	285 **86**	616 **78**	950 **70**	1150 **66**	1283 **62**	1527 **53**
3	285 **132**	619 **124**	959 **116**	1163 **110**	1298 **106**	1566 **97**
4	286 **178**	628 **170**	976 **161**	1187 **155**	1327 **151**	1600 **141**
5	282 **225**	627 **216**	979 **206**	1193 **200**	1335 **196**	1621 **185**
7	267 **317**	615 **307**	972 **296**	1189 **290**	1333 **285**	1624 **274**
9	252 **409**	600 **398**	956 **387**	1173 **379**	1318 **374**	1609 **362**

TORQUE (LB IN) 1173
SPEED (RPM) 379

TB 0100

6.0 cu in / rev

Flow (GPM)	PRESSURE (PSID) 500	1000	1500	1800	2000	2400
.5	310 **16**	669 **13**	1035 **9**	1258 **7**	1408 **5**	
1	330 **35**	697 **32**	1073 **27**	1298 **25**	1448 **23**	1737 **18**
2	346 **73**	732 **69**	1121 **64**	1353 **61**	1509 **59**	1800 **53**
3	345 **111**	735 **107**	1134 **102**	1371 **98**	1530 **95**	1844 **89**
4	347 **149**	747 **144**	1158 **139**	1403 **135**	1569 **132**	1885 **126**
5	343 **187**	750 **182**	1164 **176**	1411 **172**	1578 **169**	1909 **162**
7	327 **264**	738 **257**	1159 **250**	1411 **246**	1580 **242**	1917 **235**
9	301 **340**	715 **333**	1139 **325**	1395 **319**	1566 **316**	1909 **307**
12	257 **454**	669 **446**	1091 **437**	1347 **430**	1518 **426**	1863 **417**

TORQUE (LB IN) 1347
SPEED (RPM) 430

Cont. Int.

Intermittent operation rating applies to 10% of every minute.

Fonctionnement interm. 10% max. de chaque minute d'utilisation.

Performance data based on testing using 10W40 oil with a viscosity of 200 SUS at 54° C (130° F.). Performance data is typical. Actual data may vary slightly from one production motor to another.

Les donnees sur les performances sont basees sur des tests utilisant de l'huile 10W40 d'une viscosite de 200 SUS a 54°C (130°F). Ces donnees correspondent a des situations typiques. Les donnees reelles peuvent varier legerement d'un moteur de production a l'autre.

Intermittierende Werte maximal 10% von jeder Betriebsminute.

Capacidad de funcionamiento intermitente valida para 6 segundos por cada minuto.

Leistungsdaten sind gemessen mit SAE 10W40 bei einer Viskositaet von 43,1 Cst bei 54°C. Geringfuegige Abweichungen von den Katalogdaten sind moeglich.

Datos tecnicos obtenidos con aceite 10W40 de 200 SUS de viscosidad a 54°C (130°F). Los datos proporcionados son valores tipcos. Los valores exactos reales podrian tener una pequena variacion entre distintos motores.

WARNING
This product can expose you to chemicals including lead and DEHP, which are known to the State of California to cause cancer, and birth defects or other reproductive harm. For more information go to www.p65warnings.ca.gov

Tel: +45 63 12 83 00 | Email: ps@hymatik.com | www.hymatik.com | Hvidkaervej 27a, DK-5250 Odense SV, Denmark

TB 0130

8.0 cu in / rev PRESSURE (PSID)

Flow (GPM)	500	1000	1500	1800	2000	2400
.5	446 **12**	955 **10**	1479 **7**	1797 **5**	2011 **3**	
1	465 **27**	989 **24**	1515 **21**	1831 **19**	2043 **17**	2469 **13**
2	481 **55**	1023 **52**	1571 **49**	1901 **46**	2120 **44**	2520 **40**
3	482 **84**	1029 **81**	1581 **77**	1912 **74**	2133 **72**	2570 **67**
4	483 **113**	1042 **109**	1605 **105**	1940 **102**	2164 **100**	2608 **95**
5	478 **142**	1041 **138**	1610 **133**	1951 **130**	2179 **128**	2628 **122**
7	450 **199**	1019 **195**	1597 **190**	1943 **186**	2174 **184**	2632 **177**
9	414 **257**	984 **252**	1563 **246**	1911 **242**	2145 **239**	2612 **233**
12	335 **343**	907 **338**	1489 **331**	1842 **327**	2076 **323**	2550 **316**
15	253 **430**	818 **424**	1393 **416**	1740 **411**	1974 **407**	2443 **399**

TORQUE (LB IN) 2612
SPEED (RPM) 233

TB 0195

11.9 cu in / rev PRESSURE (PSID)

Flow (GPM)	500	1000	1500	1800	2100
.5	688 **9**	1490 **8**	2329 **7**	2841 **6**	3353 **5**
1	718 **18**	1537 **17**	2380 **16**	2890 **15**	3373 **14**
2	746 **38**	1580 **36**	2443 **35**	2962 **33**	3442 **32**
3	745 **57**	1592 **55**	2452 **53**	2973 **52**	3494 **50**
4	746 **76**	1607 **74**	2482 **72**	3008 **71**	3528 **69**
5	737 **95**	1601 **93**	2480 **91**	3011 **89**	3537 **87**
7	697 **134**	1572 **131**	2455 **129**	2986 **127**	3514 **125**
9	641 **172**	1510 **169**	2398 **167**	2934 **164**	3472 **162**
12	530 **230**	1391 **227**	2283 **223**	2821 **221**	3360 **217**
15	399 **287**	1252 **284**	2130 **280**	2662 **277**	3200 **273**

TORQUE (LB IN) 3472
SPEED (RPM) 162

TB 0165

10.0 cu in / rev PRESSURE (PSID)

Flow (GPM)	500	1000	1500	1800	2250
.5	529 **9**	1137 **7**	1769 **4**	2149 **3**	
1	556 **21**	1181 **18**	1819 **15**	2201 **13**	2776 **9**
2	580 **44**	1238 **40**	1909 **37**	2314 **34**	2876 **29**
3	584 **67**	1248 **63**	1926 **59**	2332 **56**	2934 **51**
4	592 **90**	1276 **86**	1968 **82**	2382 **78**	3000 **73**
5	588 **113**	1283 **109**	1988 **104**	2412 **101**	3046 **95**
7	560 **159**	1268 **154**	1987 **149**	2418 **145**	3062 **139**
9	517 **205**	1230 **200**	1957 **194**	2393 **190**	3047 **183**
12	425 **274**	1141 **268**	1874 **262**	2317 **257**	2980 **250**
15	321 **343**	1033 **337**	1759 **330**	2197 **325**	2859 **317**

TORQUE (LB IN) 3047
SPEED (RPM) 183

■ Cont. □ Int.

Intermittent operation rating applies to 10% of every minute.

Fonctionnement interm. 10% max. de chaque minute d'utilisation.

Performance data based on testing using 10W40 oil with a viscosity of 200 SUS at 54° C (130° F.). Performance data is typical. Actual data may vary slightly from one production motor to another.

Les donnees sur les performances sont basees sur des tests utilisant de l'huile 10W40 d'une viscosite de 200 SUS a 54°C (130°F). Ces donnees correspondent a des situations typiques. Les donnees reelles peuvent varier legerement d'un moteur de production a l'autre.

Intermittierende Werte maximal 10% von jeder Betriebsminute.

Capacidad de funcionamiento intermitente valida para 6 segundos por cada minuto.

Leistungsdaten sind gemessen mit SAE 10W40 bei einer Viskositaet von 43,1 Cst bei 54°C. Geringfuegige Abweichungen von den Katalogdaten sind moeglich.

Datos tecnicos obtenidos con aceite 10W40 de 200 SUS de viscosidad a 54°C (130°F). Los datos proporcionados son valores tipcos. Los valores exactos reales podrian tener una pequena variacion entre distintos motores.

⚠ **WARNING**
This product can expose you to chemicals including lead and DEHP, which are known to the State of California to cause cancer, and birth defects or other reproductive harm. For more information go to www.p65warnings.ca.gov

Tel: +45 63 12 83 00 | Email: ps@hymatik.com | www.hymatik.com | Hvidkaervej 27a, DK-5250 Odense SV, Denmark

TB 0230

13.9 cu in / rev PRESSURE (PSID)

Flow (GPM)	500	1000	1500	2000
.5	796 **8**	1704 **7**	2640 **6**	3597 **5**
1	818 **16**	1733 **15**	2681 **14**	3623 **13**
2	840 **32**	1775 **31**	2732 **30**	3700 **28**
3	845 **49**	1789 **47**	2750 **46**	3725 **43**
4	848 **65**	1815 **64**	2789 **62**	3762 **59**
5	840 **82**	1813 **80**	2797 **78**	3782 **74**
7	799 **114**	1790 **112**	2785 **110**	3776 **106**
9	741 **147**	1738 **145**	2738 **142**	3741 **138**
12	613 **197**	1615 **194**	2626 **190**	3645 **185**
15	473 **246**	1531 **243**	2457 **239**	3467 **233**

TORQUE (LB IN) 3776
SPEED (RPM) 106

TB 0260

15.9 cu in / rev PRESSURE (PSID)

Flow (GPM)	500	1000	1450	1900
.5	906 **7**	1947 **6**	2910 **5**	3896 **4**
1	932 **14**	1984 **13**	2964 **12**	3919 **11**
2	958 **28**	2032 **27**	3025 **26**	4000 **24**
3	961 **43**	2047 **41**	3045 **40**	4052 **38**
4	963 **57**	2074 **56**	3086 **54**	4098 **52**
5	954 **71**	2074 **70**	3096 **68**	4117 **65**
7	909 **100**	2049 **99**	3084 **96**	4112 **93**
9	844 **129**	1991 **127**	3032 **125**	4070 **121**
12	696 **172**	1851 **170**	2903 **167**	3953 **162**
15	540 **216**	1683 **213**	2711 **209**	3753 **204**

TORQUE (LB IN) 4112
SPEED (RPM) 93

TB 0295

17.9 cu in / rev PRESSURE (PSID)

Flow (GPM)	500	1000	1400	1800
.5	1039 **6**	2229 **5**	3208 **4**	4200 **3**
1	1069 **12**	2281 **11**	3265 **10**	4248 **9**
2	1098 **25**	2332 **24**	3337 **22**	4290 **20**
3	1100 **38**	2344 **36**	3353 **35**	4356 **32**
4	1098 **50**	2366 **49**	3386 **47**	4398 **44**
5	1086 **63**	2361 **61**	3391 **60**	4415 **57**
7	1034 **89**	2325 **87**	3361 **85**	4394 **81**
9	955 **114**	2250 **112**	3295 **109**	4337 **106**
12	792 **153**	2085 **150**	3141 **147**	4194 **142**
15	606 **191**	1879 **188**	2908 **185**	3955 **180**

TORQUE (LB IN) 4337
SPEED (RPM) 106

Cont. Int.

Intermittent operation rating applies to 10% of every minute.

Fonctionnement interm. 10% max. de chaque minute d'utilisation.

Performance data based on testing using 10W40 oil with a viscosity of 200 SUS at 54° C (130° F.). Performance data is typical. Actual data may vary slightly from one production motor to another.

Les donnees sur les performances sont basees sur des tests utilisant de l'huile 10W40 d'une viscosite de 200 SUS a 54°C (130°F). Ces donnees correspondent a des situations typiques. Les donnees reelles peuvent varier legerement d'un moteur de production a l'autre.

Intermittierende Werte maximal 10% von jeder Betriebsminute.

Capacidad de funcionamiento intermitente valida para 6 segundos por cada minuto.

Leistungsdaten sind gemessen mit SAE 10W40 bei einer Viskositaet von 43,1 Cst bei 54°C. Geringfuegige Abweichungen von den Katalogdaten sind moeglich.

Datos tecnicos obtenidos con aceite 10W40 de 200 SUS de viscosidad a 54°C (130°F). Los datos proporcionados son valores tipcos. Los valores exactos reales podrian tener una pequena variacion entre distintos motores.

WARNING
This product can expose you to chemicals including lead and DEHP, which are known to the State of California to cause cancer, and birth defects or other reproductive harm. For more information go to www.p65warnings.ca.gov

Tel: +45 63 12 83 00 | Email: ps@hymatik.com | www.hymatik.com | Hvidkaervej 27a, DK-5250 Odense SV, Denmark

TB 0330

20.0 cu in / rev PRESSURE (PSID)

Flow (GPM)	500	1000	1350	1650
.5	1192 **5**	2498 **4**	3425 **4**	4227 **3**
1	1224 **11**	2555 **10**	3495 **9**	4250 **8**
2	1255 **22**	2620 **21**	3581 **20**	4350 **18**
3	1259 **34**	2633 **32**	3597 **31**	4424 **29**
4	1258 **45**	2666 **43**	3645 **42**	4480 **40**
5	1243 **56**	2665 **55**	3657 **53**	4505 **51**
7	1186 **79**	2627 **77**	3634 **75**	4492 **73**
9	1092 **102**	2544 **100**	3563 **97**	4431 **94**
12	905 **137**	2363 **134**	3391 **131**	4269 **127**
15	692 **171**	2129 **168**	3136 **165**	4001 **161**

TORQUE (LB IN) 4431
SPEED (RPM) 94

TB 0390

24.0 cu in / rev PRESSURE (PSID)

Flow (GPM)	500	1000	1200	1450
.5	1309 **4**	2885 **3**	3534 **2**	4359 **2**
1	1368 **9**	2948 **8**	3589 **7**	4394 **6**
2	1417 **18**	3028 **17**	3683 **16**	4460 **15**
3	1427 **28**	3058 **26**	3714 **26**	4540 **24**
4	1443 **37**	3102 **36**	3764 **35**	4595 **34**
5	1439 **47**	3120 **45**	3790 **45**	4630 **43**
7	1392 **66**	3110 **65**	3792 **64**	4642 **62**
9	1297 **85**	3040 **84**	3732 **83**	4597 **81**
12	1087 **114**	2835 **112**	3541 **111**	4418 **110**
15	831 **143**	2571 **141**	3272 **140**	4145 **138**

TORQUE (LB IN) 4597
SPEED (RPM) 81

TB 0365

22.6 cu in / rev PRESSURE (PSID)

Flow (GPM)	500	1000	1250	1525
.5	1393 **5**	2942 **4**	3734 **4**	4617 **3**
1	1444 **10**	3005 **9**	3796 **9**	4672 **8**
2	1494 **20**	3090 **19**	3890 **18**	4710 **17**
3	1485 **30**	3082 **29**	3883 **28**	4765 **27**
4	1477 **40**	3089 **39**	3897 **38**	4783 **36**
5	1452 **50**	3075 **49**	3887 **48**	4775 **46**
7	1371 **70**	3009 **69**	3826 **67**	4719 **65**
9	1260 **90**	2899 **89**	3721 **87**	4621 **85**
12	1002 **121**	2658 **119**	3488 **117**	4393 **115**
15	700 **151**	2355 **149**	3190 **147**	4095 **144**

TORQUE (LB IN) 4621
SPEED (RPM) 85

☐ Cont. ☐ Int.

Intermittent operation rating applies to 10% of every minute.

Fonctionnement interm. 10% max. de chaque minute d'utilisation.

Performance data based on testing using 10W40 oil with a viscosity of 200 SUS at 54° C (130° F.). Performance data is typical. Actual data may vary slightly from one production motor to another.

Les donnees sur les performances sont basees sur des tests utilisant de l'huile 10W40 d'une viscosite de 200 SUS a 54°C (130°F). Ces donnees correspondent a des situations typiques. Les donnees reelles peuvent varier legerement d'un moteur de production a l'autre.

Intermittierende Werte maximal 10% von jeder Betriebsminute.

Capacidad de funcionamiento intermitente valida para 6 segundos por cada minuto.

Leistungsdaten sind gemessen mit SAE 10W40 bei einer Viskositaet von 43,1 Cst bei 54°C. Geringfuegige Abweichungen von den Katalogdaten sind moeglich.

Datos tecnicos obtenidos con aceite 10W40 de 200 SUS de viscosidad a 54°C (130°F). Los datos proporcionados son valores tipcos. Los valores exactos reales podrian tener una pequena variacion entre distintos motores.

WARNING
This product can expose you to chemicals including lead and DEHP, which are known to the State of California to cause cancer, and birth defects or other reproductive harm. For more information go to www.p65warnings.ca.gov

Tel: +45 63 12 83 00 | Email: ps@hymatik.com | www.hymatik.com | Hvidkaervej 27a, DK-5250 Odense SV, Denmark

Notes

WARNING
This product can expose you to chemicals including lead and DEHP, which are known to the State of California to cause cancer, and birth defects or other reproductive harm. For more information go to www.p65warnings.ca.gov

Tel: +45 63 12 83 00 | Email: ps@hymatik.com | www.hymatik.com | Hvidkaervej 27a, DK-5250 Odense SV, Denmark

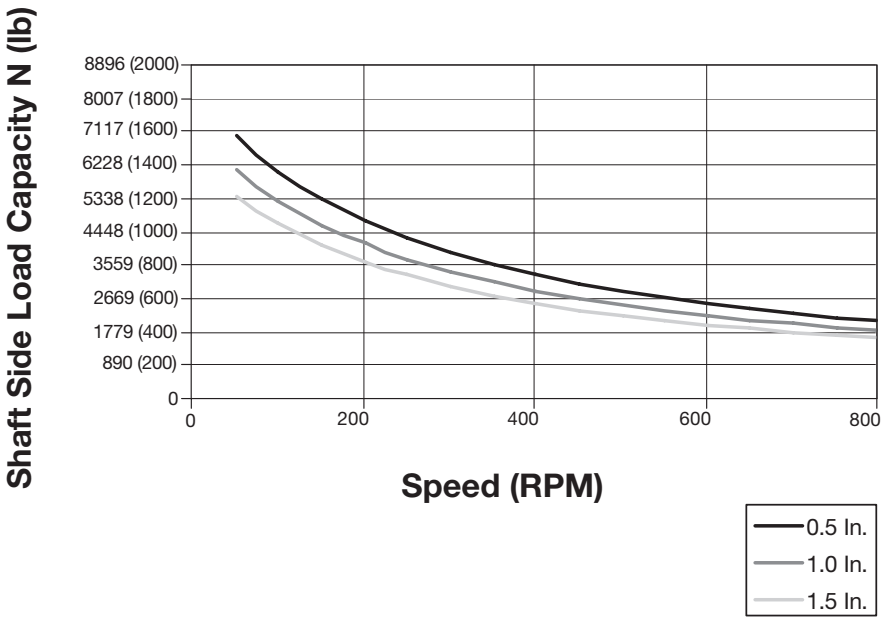

The allowable side load curve is based on bushing life of 2.5 x 10^6 revolutions.
Die zulaessige radiale Wellenbelastung bezieht sich auf die Lager-Lebensdauer 2,5 x 10^6 Umdrehungen.
L'effort radial admissible sur l'arbre depend a une duree de vie 2,5 x 10^6 de rotation.
La curva de carga lateral admisible se basa en vida util de cojinete de 2.5 x 10 revoluciones.

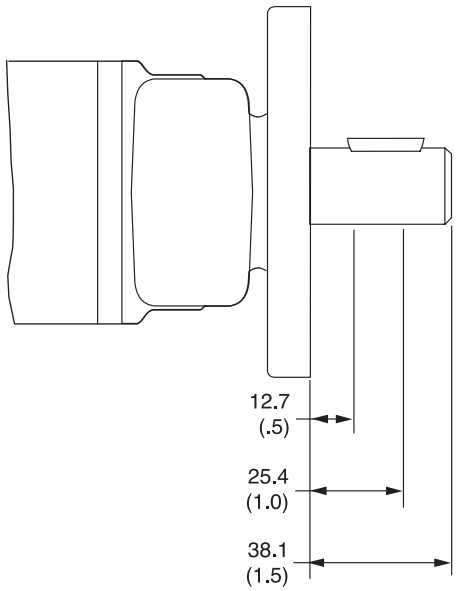

English equivalents for metric specifications are shown in ( ).

WARNING
This product can expose you to chemicals including lead and DEHP, which are known to the State of California to cause cancer, and birth defects or other reproductive harm. For more information go to www.p65warnings.ca.gov

Tel: +45 63 12 83 00 | Email: ps@hymatik.com | www.hymatik.com | Hvidkaervej 27a, DK-5250 Odense SV, Denmark

Code: AM

SAE A 2-Bolt, 5/16-18 UNC Manifold

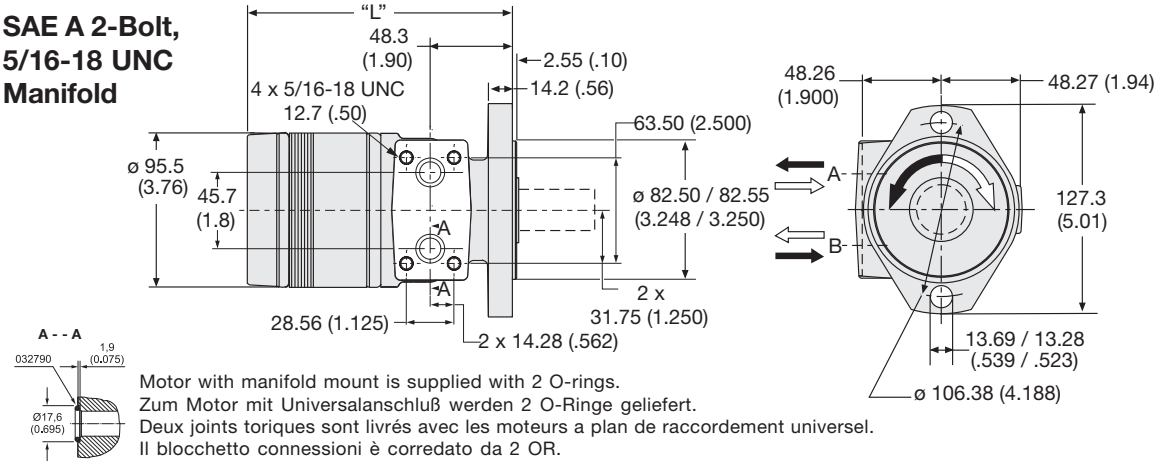

Motor with manifold mount is supplied with 2 O-rings.
Zum Motor mit Universalanschluß werden 2 O-Ringe geliefert.
Deux joints toriques sont livrés avec les moteurs a plan de raccordement universel.
Il blocchetto connessioni è corredato da 2 OR.

Code AM disp.	0036	0045	0050	0065	0080	0100	0130	0165	0195	0230	0260	0295	0330	0365	0390
Weight/Gewicht kg	**5.87**	**6.03**	**6.12**	**6.26**	**6.35**	**6.49**	**6.76**	**7.03**	**7.35**	**7.58**	**7.80**	**8.07**	**8.35**	**8.66**	**8.80**
Poids/Peso (lb)	(12.9)	(13.3)	(13.5)	(13.8)	(14.0)	(14.3)	(14.9)	(15.5)	(16.2)	(16.7)	(17.2)	(17.8)	(18.4)	(19.1)	(19.4)
Length"L" mm	**132.6**	**136.1**	**137.7**	**140.7**	**144.0**	**147.1**	**153.4**	**159.8**	**166.1**	**172.5**	**178.8**	**185.1**	**191.5**	**200.2**	**202.2**
"L" (in)	(5.22)	(5.36)	(5.42)	(5.54)	(5.67)	(5.79)	(6.04)	(6.29)	(6.54)	(6.79)	(7.04)	(7.29)	(7.54)	(7.88)	(8.04)

Code: AP

SAE A 2-Bolt, 1/2-14 NPTF

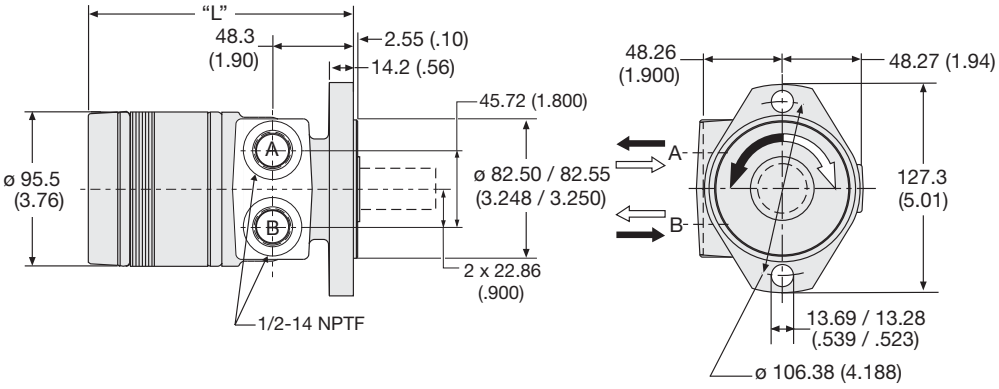

Code AP disp.	0036	0045	0050	0065	0080	0100	0130	0165	0195	0230	0260	0295	0330	0365	0390
Weight/Gewicht kg	**5.87**	**6.03**	**6.12**	**6.26**	**6.35**	**6.49**	**6.76**	**7.03**	**7.35**	**7.58**	**7.80**	**8.07**	**8.35**	**8.66**	**8.80**
Poids/Peso (lb)	(12.9)	(13.3)	(13.5)	(13.8)	(14.0)	(14.3)	(14.9)	(15.5)	(16.2)	(16.7)	(17.2)	(17.8)	(18.4)	(19.1)	(19.4)
Length"L" mm	**132.6**	**136.1**	**137.7**	**140.7**	**144.0**	**147.1**	**153.4**	**159.8**	**166.1**	**172.5**	**178.8**	**185.1**	**191.5**	**200.2**	**202.2**
"L" (in)	(5.22)	(5.36)	(5.42)	(5.54)	(5.67)	(5.79)	(6.04)	(6.29)	(6.54)	(6.79)	(7.04)	(7.29)	(7.54)	(7.88)	(8.04)

English equivalents for metric specifications are shown in ( ).

WARNING
This product can expose you to chemicals including lead and DEHP, which are known to the State of California to cause cancer, and birth defects or other reproductive harm. For more information go to www.p65warnings.ca.gov

Tel: +45 63 12 83 00 | Email: ps@hymatik.com | www.hymatik.com | Hvidkaervej 27a, DK-5250 Odense SV, Denmark

Code: AS

SAE A 2-Bolt, 7/8"-14 SAE O-Ring

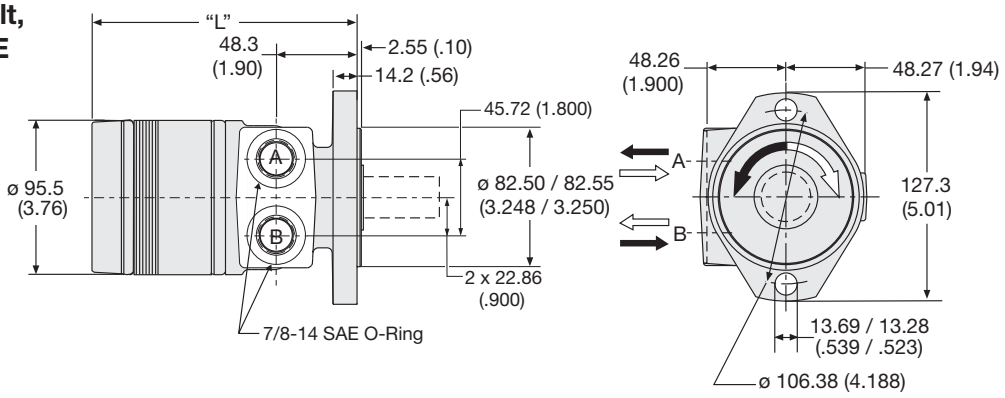

Code AS disp.	0036	0045	0050	0065	0080	0100	0130	0165	0195	0230	0260	0295	0330	0365	0390
Weight/Gewicht kg	**5.87**	**6.03**	**6.12**	**6.26**	**6.35**	**6.49**	**6.76**	**7.03**	**7.35**	**7.58**	**7.80**	**8.07**	**8.35**	**8.66**	**8.80**
Poids/Peso (lb)	(12.9)	(13.3)	(13.5)	(13.8)	(14.0)	(14.3)	(14.9)	(15.5)	(16.2)	(16.7)	(17.2)	(17.8)	(18.4)	(19.1)	(19.4)
Length"L" mm	**132.6**	**136.1**	**137.7**	**140.7**	**144.0**	**147.1**	**153.4**	**159.8**	**166.1**	**172.5**	**178.8**	**185.1**	**191.5**	**200.2**	**202.2**
"L" (in)	(5.22)	(5.36)	(5.42)	(5.54)	(5.67)	(5.79)	(6.04)	(6.29)	(6.54)	(6.79)	(7.04)	(7.29)	(7.54)	(7.88)	(8.04)

Code: FM

4-Bolt, 5/16-18 UNC Manifold

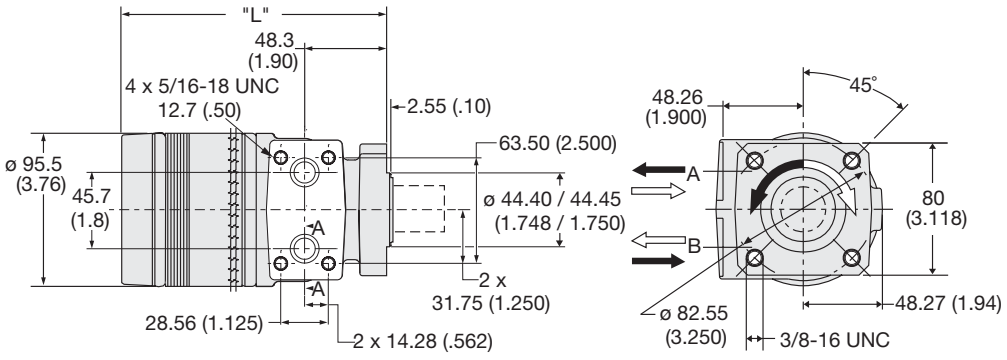

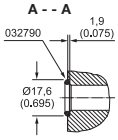

Motor with manifold mount is supplied with 2 O-rings.
Zum Motor mit Universalanschluß werden 2 O-Ringe geliefert.
Deux joints toriques sont livrés avec les moteurs a plan de raccordement universel.
Il blocchetto connessioni è corredato da 2 OR.

Code FM disp.	0036	0045	0050	0065	0080	0100	0130	0165	0195	0230	0260	0295	0330	0365	0390
Weight/Gewicht kg	**5.58**	**5.62**	**5.67**	**5.80**	**5.94**	**6.08**	**6.31**	**6.62**	**7.03**	**7.17**	**7.39**	**7.62**	**7.94**	**8.26**	**8.39**
Poids/Peso (lb)	(12.3)	(12.4)	(12.5)	(12.8)	(13.1)	(13.4)	(13.9)	(14.6)	(15.5)	(15.8)	(16.3)	(16.8)	(17.5)	(18.2)	(18.5)
Length"L" mm	**132.6**	**136.1**	**137.7**	**140.7**	**144.0**	**147.1**	**153.4**	**159.8**	**166.1**	**172.5**	**178.8**	**185.1**	**191.5**	**200.2**	**202.2**
"L" (in)	(5.22)	(5.36)	(5.42)	(5.54)	(5.67)	(5.79)	(6.04)	(6.29)	(6.54)	(6.79)	(7.04)	(7.29)	(7.54)	(7.88)	(8.04)

English equivalents for metric specifications are shown in ( ).

WARNING
This product can expose you to chemicals including lead and DEHP, which are known to the State of California to cause cancer, and birth defects or other reproductive harm. For more information go to www.p65warnings.ca.gov

Tel: +45 63 12 83 00 | Email: ps@hymatik.com | www.hymatik.com | Hvidkaervej 27a, DK-5250 Odense SV, Denmark

Code: FP

4 Bolt,
1/2-14 NPTF

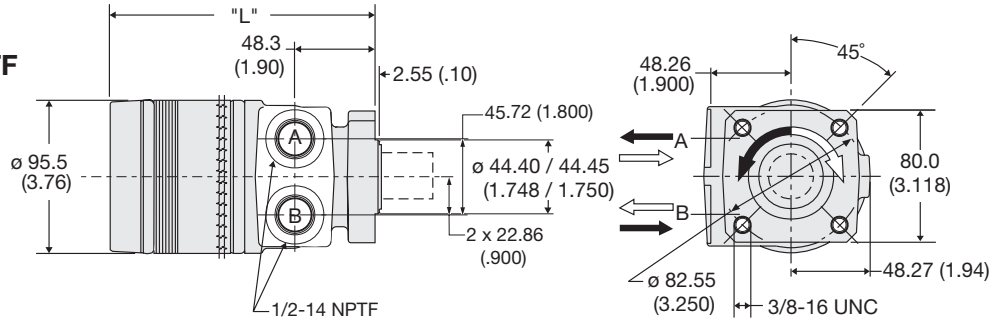

Code FP disp.	0036	0045	0050	0065	0080	0100	0130	0165	0195	0230	0260	0295	0330	0365	0390
Weight/Gewicht kg	**5.58**	**5.62**	**5.67**	**5.80**	**5.94**	**6.08**	**6.31**	**6.62**	**7.03**	**7.17**	**7.39**	**7.62**	**7.94**	**8.26**	**8.39**
Poids/Peso (lb)	(12.3)	(12.4)	(12.5)	(12.8)	(13.1)	(13.4)	(13.9)	(14.6)	(15.5)	(15.8)	(16.3)	(16.8)	(17.5)	(18.2)	(18.5)
Length"L" mm	**132.6**	**136.1**	**137.7**	**140.7**	**144.0**	**147.1**	**153.4**	**159.8**	**166.1**	**172.5**	**178.8**	**185.1**	**191.5**	**200.2**	**202.2**
"L" (in)	(5.22)	(5.36)	(5.42)	(5.54)	(5.67)	(5.79)	(6.04)	(6.29)	(6.54)	(6.79)	(7.04)	(7.29)	(7.54)	(7.88)	(8.04)

Code: FS

4 Bolt,
7/8"-14 SAE
O-Ring

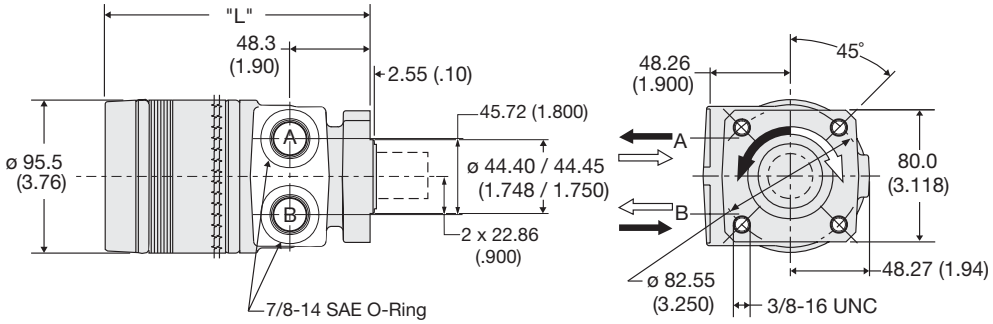

Code FS disp.	0036	0045	0050	0065	0080	0100	0130	0165	0195	0230	0260	0295	0330	0365	0390
Weight/Gewicht kg	**5.58**	**5.62**	**5.67**	**5.80**	**5.94**	**6.08**	**6.31**	**6.62**	**7.03**	**7.17**	**7.39**	**7.62**	**7.94**	**8.26**	**8.39**
Poids/Peso (lb)	(12.3)	(12.4)	(12.5)	(12.8)	(13.1)	(13.4)	(13.9)	(14.6)	(15.5)	(15.8)	(16.3)	(16.8)	(17.5)	(18.2)	(18.5)
Length"L" mm	**132.6**	**136.1**	**137.7**	**140.7**	**144.0**	**147.1**	**153.4**	**159.8**	**166.1**	**172.5**	**178.8**	**185.1**	**191.5**	**200.2**	**202.2**
"L" (in)	(5.22)	(5.36)	(5.42)	(5.54)	(5.67)	(5.79)	(6.04)	(6.29)	(6.54)	(6.79)	(7.04)	(7.29)	(7.54)	(7.88)	(8.04)

English equivalents for metric specifications are shown in ( ).

WARNING
This product can expose you to chemicals including lead and DEHP, which are known to the State of California to cause cancer, and birth defects or other reproductive harm. For more information go to www.p65warnings.ca.gov

Tel: +45 63 12 83 00 | Email: ps@hymatik.com | www.hymatik.com | Hvidkaervej 27a, DK-5250 Odense SV, Denmark

Code: BS
SAE B 2-Bolt
7/8-14 SAE

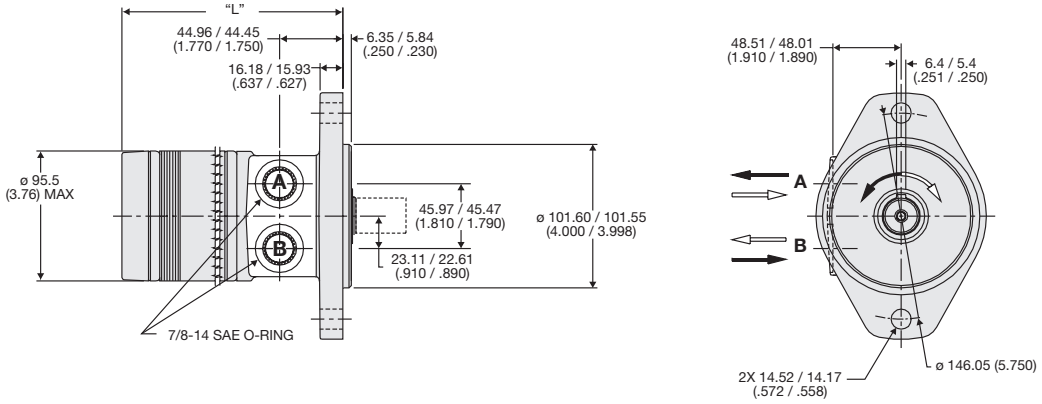

Code BS disp.	0036	0045	0050	0065	0080	0100	0130	0165	0195	0230	0260	0295	0330	0365	0390
Weight/Gewicht kg	**7.27**	**7.34**	**7.48**	**7.62**	**7.71**	**7.84**	**8.11**	**8.39**	**8.70**	**8.93**	**9.16**	**9.43**	**9.70**	**9.97**	**10.1**
Poids/Peso (lb)	(15.9)	(16.3)	(16.5)	(16.8)	(17.0)	(17.3)	(17.9)	(18.5)	(19.2)	(19.7)	(20.2)	(20.8)	(21.4)	(22.0)	(22.4)
Length"L" mm	**131.5**	**132.5**	**134.1**	**137.1**	**140.4**	**143.5**	**149.8**	**156.2**	**162.5**	**168.9**	**175.2**	**181.6**	**187.9**	**196.5**	**200.9**
"L" (in)	(5.18)	(5.22)	(5.28)	(5.40)	(5.53)	(5.65)	(5.90)	(6.15)	(6.40)	(6.65)	(6.90)	(7.15)	(7.40)	(7.74)	(7.91)

Code: CM
SAE A 2 Bolt, Long Pilot
5/16-18 UNC Manifold

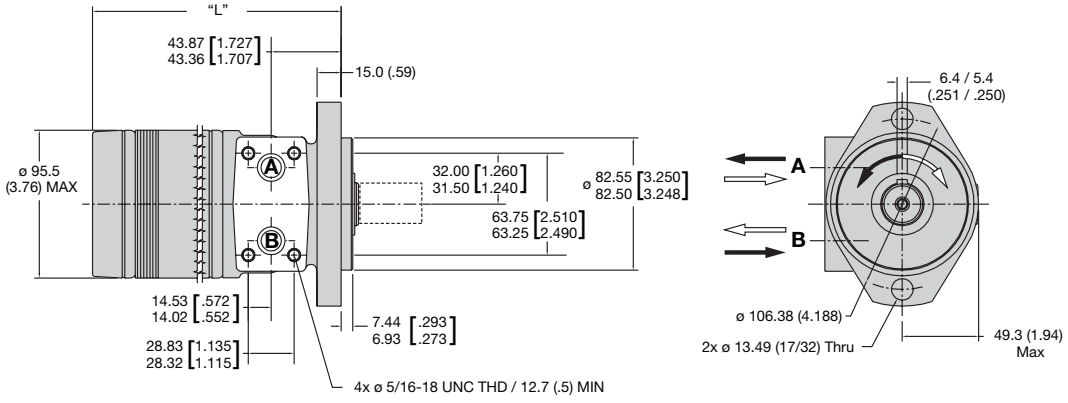

Code CM disp.	0036	0045	0050	0065	0080	0100	0130	0165	0195	0230	0260	0295	0330	0365	0390
Weight/Gewicht kg	**6.17**	**6.35**	**6.44**	**6.58**	**6.67**	**6.80**	**7.07**	**7.35**	**7.66**	**7.84**	**8.11**	**8.39**	**8.66**	**8.94**	**9.11**
Poids/Peso (lb)	(13.6)	(14.0)	(14.2)	(14.5)	(14.7)	(15.0)	(15.6)	(16.2)	(16.9)	(17.4)	(17.9)	(18.5)	(19.1)	(19.7)	(20.1)
Length "L" mm	**130.4**	**131.5**	**132.9**	**136.1**	**139.3**	**142.5**	**148.8**	**155.2**	**161.5**	**167.9**	**174.2**	**180.6**	**186.9**	**195.6**	**199.7**
"L" (in)	(5.13)	(5.18)	(5.23)	(5.36)	(5.48)	(5.61)	(5.86)	(6.11)	(6.36)	(6.61)	(6.86)	(7.11)	(7.36)	(7.70)	(7.86)

English equivalents for metric specifications are shown in ( ).

WARNING
This product can expose you to chemicals including lead and DEHP, which are known to the State of California to cause cancer, and birth defects or other reproductive harm. For more information go to www.p65warnings.ca.gov

Tel: +45 63 12 83 00 | Email: ps@hymatik.com | www.hymatik.com | Hvidkaervej 27a, DK-5250 Odense SV, Denmark

Code: MS
Magneto
7/8-14 SAE

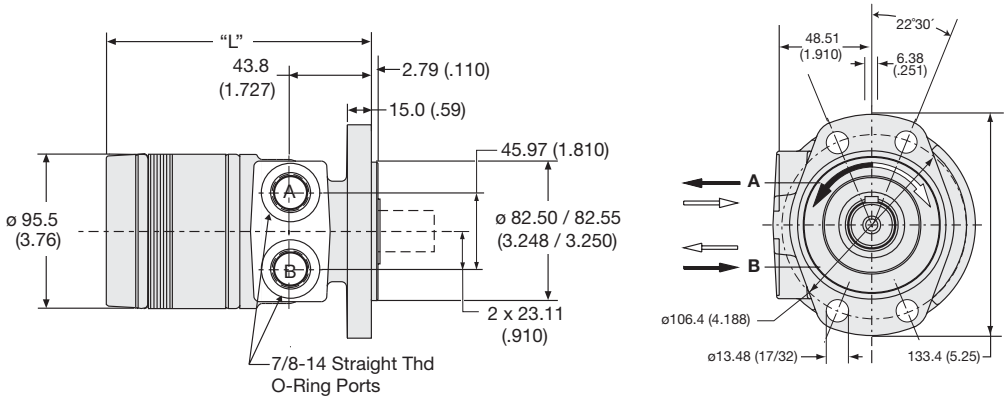

Code MS	disp.	0036	0045	0050	0065	0080	0100	0130	0165	0195	0230	0260	0295	0330	0365	0390
Weight/Gewicht	**kg**	**6.16**	**6.30**	**6.40**	**6.53**	**6.62**	**6.76**	**7.03**	**7.30**	**7.62**	**7.85**	**8.12**	**8.35**	**8.62**	**8.94**	**9.07**
Poids/Peso	(lb)	(13.6)	(13.9)	(14.1)	(14.4)	(14.6)	(14.9)	(15.5)	(16.1)	(16.8)	(17.3)	(17.9)	(18.4)	(19.0)	(19.7)	(20.0)
Length	**"L" mm**	**135.1**	**136.1**	**137.6**	**140.8**	**144.0**	**147.1**	**153.5**	**159.8**	**166.2**	**172.5**	**178.9**	**185.2**	**191.6**	**200.2**	**204.3**
	"L" (in)	(5.32)	(5.36)	(5.42)	(5.54)	(5.67)	(5.79)	(6.04)	(6.29)	(6.54)	(6.79)	(7.04)	(7.29)	(7.54)	(7.88)	(8.04)

Code: BP
SAE B 2-Bolt
1/2-14 NPTF

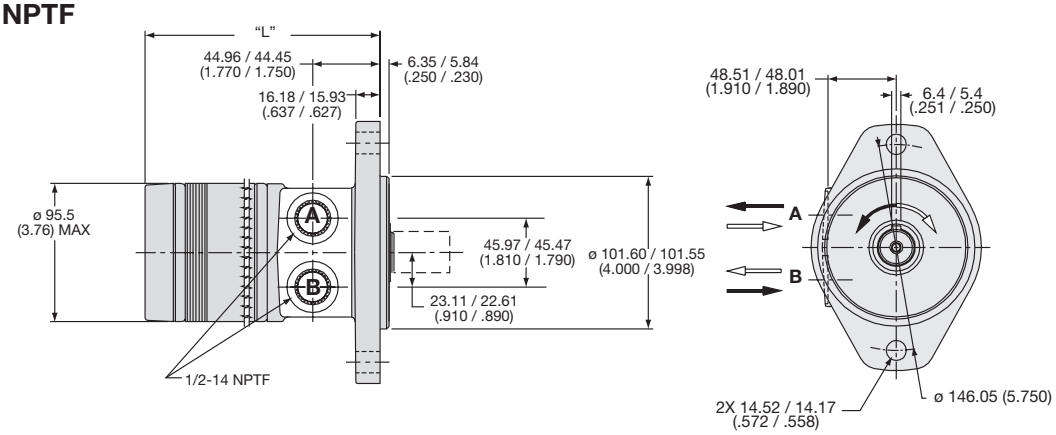

Code BP	disp.	0036	0045	0050	0065	0080	0100	0130	0165	0195	0230	0260	0295	0330	0365	0390
Weight/Gewicht	**kg**	**7.27**	**7.34**	**7.48**	**7.62**	**7.71**	**7.84**	**8.11**	**8.39**	**8.70**	**8.93**	**9.16**	**9.43**	**9.70**	**9.97**	**10.1**
Poids/Peso	(lb)	(15.9)	(16.3)	(16.5)	(16.8)	(17.0)	(17.3)	(17.9)	(18.5)	(19.2)	(19.7)	(20.2)	(20.8)	(21.4)	(22.0)	(22.4)
Length	**"L" mm**	**131.4**	**132.5**	**134.0**	**137.2**	**140.4**	**143.6**	**149.9**	**156.3**	**162.6**	**169.0**	**175.3**	**181.7**	**188.0**	**196.7**	**200.8**
	"L" (in)	(5.18)	(5.22)	(5.28)	(5.40)	(5.53)	(5.65)	(5.90)	(6.15)	(6.40)	(6.65)	(6.90)	(7.15)	(7.40)	(7.74)	(7.90)

English equivalents for metric specifications are shown in ( ).

WARNING
This product can expose you to chemicals including lead and DEHP, which are known to the State of California to cause cancer, and birth defects or other reproductive harm. For more information go to www.p65warnings.ca.gov

Tel: +45 63 12 83 00 | Email: ps@hymatik.com | www.hymatik.com | Hvidkaervej 27a, DK-5250 Odense SV, Denmark

Code: BM
SAE B 2-Bolt
5/16-18 UNC Manifold

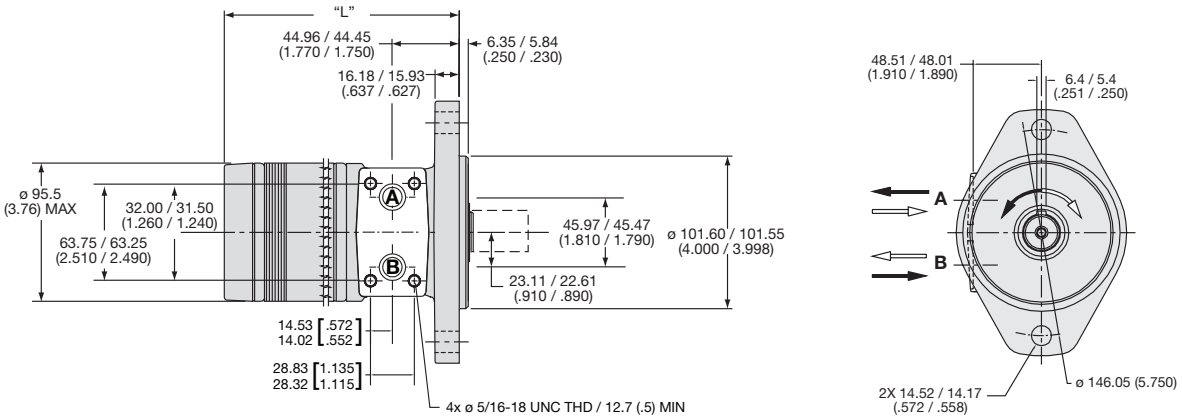

Code BM	disp.	0036	0045	0050	0065	0080	0100	0130	0165	0195	0230	0260	0295	0330	0365	0390
Weight/Gewicht	**kg**	**7.27**	**7.34**	**7.48**	**7.62**	**7.71**	**7.84**	**8.11**	**8.39**	**8.70**	**8.93**	**9.16**	**9.43**	**9.70**	**9.97**	**10.1**
Poids/Peso	(lb)	(15.9)	(16.3)	(16.5)	(16.8)	(17.0)	(17.3)	(17.9)	(18.5)	(19.2)	(19.7)	(20.2)	(20.8)	(21.4)	(22.0)	(22.4)
Length	**"L" mm**	**131.4**	**132.5**	**134.0**	**137.2**	**140.4**	**143.6**	**149.9**	**156.3**	**162.6**	**169.0**	**175.3**	**181.7**	**188.0**	**196.7**	**200.8**
	"L" (in)	(5.18)	(5.22)	(5.28)	(5.40)	(5.53)	(5.65)	(5.90)	(6.15)	(6.40)	(6.65)	(6.90)	(7.15)	(7.40)	(7.74)	(7.90)

Code: CP
SAE A 2 Bolt, Long Pilot
1/2-14 NPTF

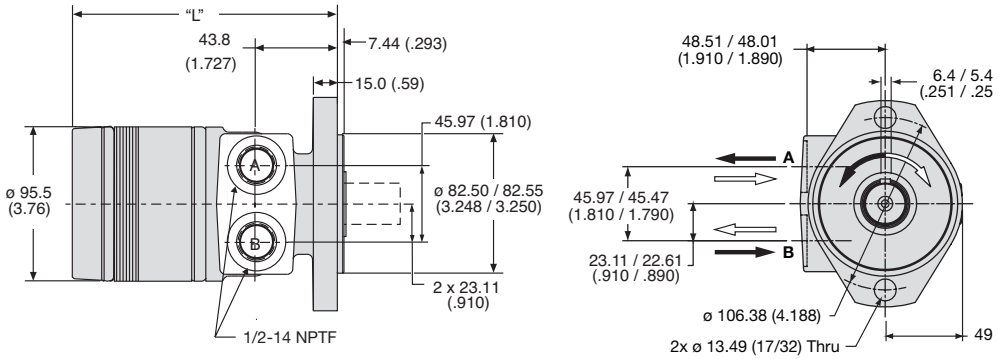

Code CP	disp.	0036	0045	0050	0065	0080	0100	0130	0165	0195	0230	0260	0295	0330	0365	0390
Weight/Gewicht	**kg**	**6.17**	**6.35**	**6.44**	**6.58**	**6.67**	**6.80**	**7.07**	**7.35**	**7.66**	**7.84**	**8.11**	**8.39**	**8.66**	**8.94**	**9.11**
Poids/Peso	(lb)	(13.6)	(14.0)	(14.2)	(14.5)	(14.7)	(15.0)	(15.6)	(16.2)	(16.9)	(17.4)	(17.9)	(18.5)	(19.1)	(19.7)	(20.1)
Length	**"L" mm**	**130.4**	**131.5**	**132.9**	**136.1**	**139.3**	**142.5**	**148.8**	**155.2**	**161.5**	**167.9**	**174.2**	**180.6**	**186.9**	**195.6**	**199.7**
	"L" (in)	(5.13)	(5.18)	(5.23)	(5.36)	(5.48)	(5.61)	(5.86)	(6.11)	(6.36)	(6.61)	(6.86)	(7.11)	(7.36)	(7.70)	(7.86)

English equivalents for metric specifications are shown in ( ).

WARNING
This product can expose you to chemicals including lead and DEHP, which are known to the State of California to cause cancer, and birth defects or other reproductive harm. For more information go to www.p65warnings.ca.gov

Tel: +45 63 12 83 00 | Email: ps@hymatik.com | www.hymatik.com | Hvidkaervej 27a, DK-5250 Odense SV, Denmark

Code: CS
SAE A 2 Bolt, Long Pilot
7/8-14 SAE

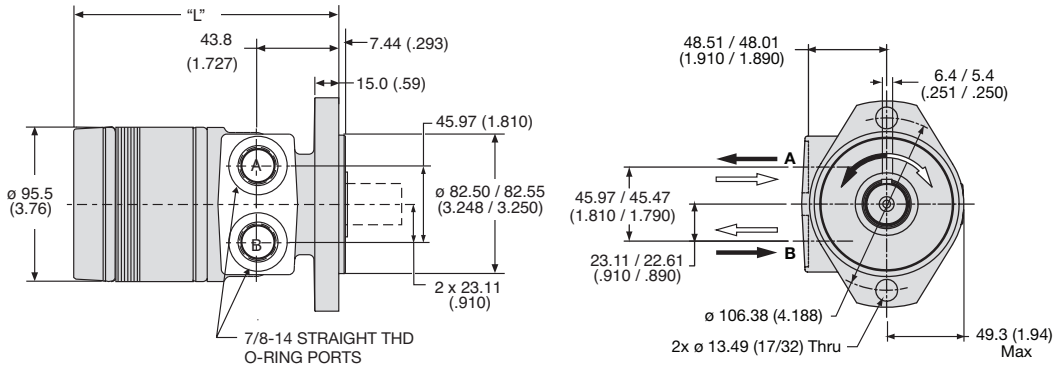

Code CS disp.	0036	0045	0050	0065	0080	0100	0130	0165	0195	0230	0260	0295	0330	0365	0390
Weight/Gewichtkg	**5.87**	**6.03**	**6.12**	**6.26**	**6.35**	**6.49**	**6.76**	**7.03**	**7.35**	**7.58**	**7.80**	**8.07**	**8.35**	**8.66**	**8.80**
Poids/Peso (lb)	(12.9)	(13.3)	(13.5)	(13.8)	(14.0)	(14.3)	(14.9)	(15.5)	(16.2)	(16.7)	(17.2)	(17.8)	(18.4)	(19.1)	(19.4)
Length "L" mm	**130.4**	**131.5**	**132.9**	**136.1**	**139.3**	**142.5**	**148.8**	**155.2**	**161.5**	**167.9**	**174.2**	**180.6**	**186.9**	**195.6**	**199.7**
"L" (in)	(5.13)	(5.18)	(5.23)	(5.36)	(5.48)	(5.61)	(5.86)	(6.11)	(6.36)	(6.61)	(6.86)	(7.11)	(7.36)	(7.70)	(7.86)

Code: MM
Magneto
5/16-18 UNC Manifold

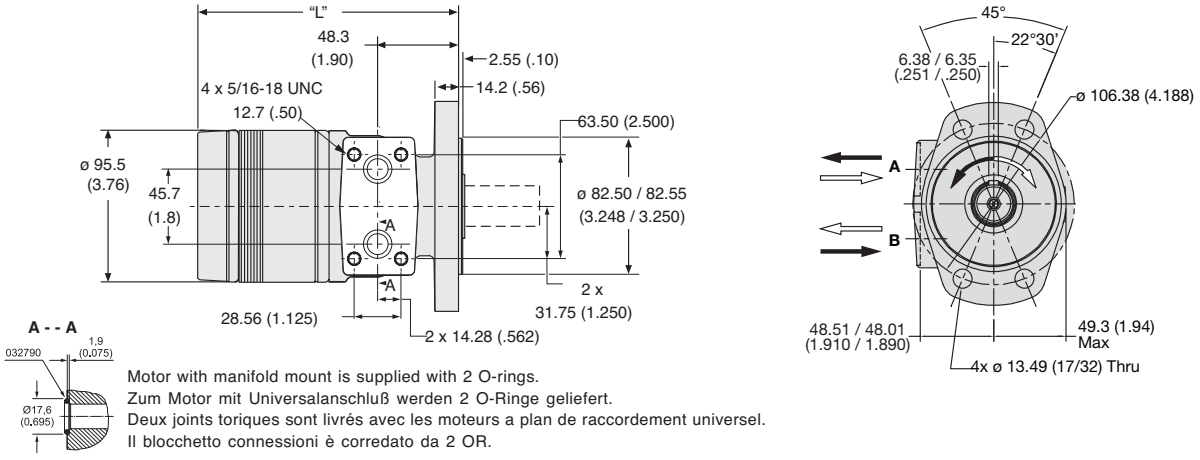

Motor with manifold mount is supplied with 2 O-rings.
Zum Motor mit Universalanschluß werden 2 O-Ringe geliefert.
Deux joints toriques sont livrés avec les moteurs a plan de raccordement universel.
Il blocchetto connessioni è corredato da 2 OR.

Code MM disp.	0036	0045	0050	0065	0080	0100	0130	0165	0195	0230	0260	0295	0330	0365	0390
Weight/Gewicht kg	**6.16**	**6.30**	**6.40**	**6.53**	**6.62**	**6.76**	**7.03**	**7.30**	**7.62**	**7.85**	**8.12**	**8.35**	**8.62**	**8.94**	**9.07**
Poids/Peso (lb)	(13.6)	(13.9)	(14.1)	(14.4)	(14.6)	(14.9)	(15.5)	(16.1)	(16.8)	(17.3)	(17.9)	(18.4)	(19.0)	(19.7)	(20.0)
Length "L" mm	**135.0**	**136.1**	**137.6**	**140.8**	**144.0**	**147.1**	**153.5**	**159.8**	**166.2**	**172.5**	**178.9**	**185.2**	**191.6**	**200.2**	**204.3**
"L" (in)	(5.32)	(5.36)	(5.42)	(5.54)	(5.67)	(5.79)	(6.04)	(6.29)	(6.54)	(6.79)	(7.04)	(7.29)	(7.54)	(7.88)	(8.04)

English equivalents for metric specifications are shown in ( ).

WARNING
This product can expose you to chemicals including lead and DEHP, which are known to the State of California to cause cancer, and birth defects or other reproductive harm. For more information go to www.p65warnings.ca.gov

Tel: +45 63 12 83 00 | Email: ps@hymatik.com | www.hymatik.com | Hvidkaervej 27a, DK-5250 Odense SV, Denmark

Code: MP
Magneto
1/2-14 NPTF

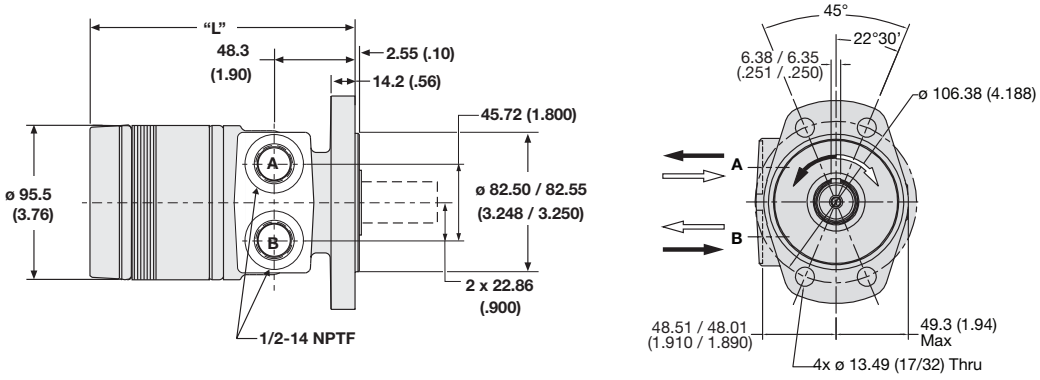

Code MP	disp.	0036	0045	0050	0065	0080	0100	0130	0165	0195	0230	0260	0295	0330	0365	0390
Weight/Gewicht	**kg**	**6.16**	**6.30**	**6.40**	**6.53**	**6.62**	**6.76**	**7.03**	**7.30**	**7.62**	**7.85**	**8.12**	**8.35**	**8.62**	**8.94**	**9.07**
Poids/Peso	(lb)	(13.6)	(13.9)	(14.1)	(14.4)	(14.6)	(14.9)	(15.5)	(16.1)	(16.8)	(17.3)	(17.9)	(18.4)	(19.0)	(19.7)	(20.0)
Length	**"L" mm**	**135.1**	**136.1**	**137.6**	**140.8**	**144.0**	**147.1**	**153.5**	**159.8**	**166.2**	**172.5**	**178.9**	**185.2**	**191.6**	**200.2**	**204.3**
	"L" (in)	(5.32)	(5.36)	(5.42)	(5.54)	(5.67)	(5.79)	(6.04)	(6.29)	(6.54)	(6.79)	(7.04)	(7.29)	(7.54)	(7.88)	(8.04)

English equivalents for metric specifications are shown in ( ).

WARNING
This product can expose you to chemicals including lead and DEHP, which are known to the State of California to cause cancer, and birth defects or other reproductive harm. For more information go to www.p65warnings.ca.gov

Tel: +45 63 12 83 00 | Email: ps@hymatik.com | www.hymatik.com | Hvidkaervej 27a, DK-5250 Odense SV, Denmark

Code: R
Rear Port
3/4"-16 SAE O-Ring

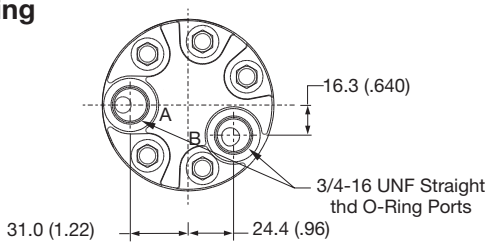

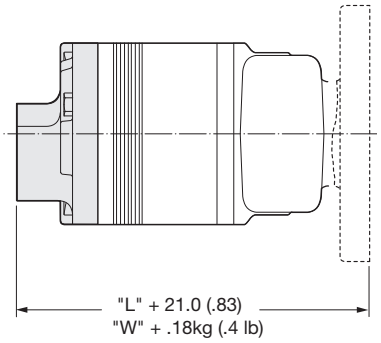

Code: Y
Rear Port
G 1/2 BSPP

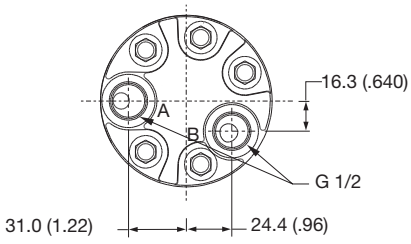

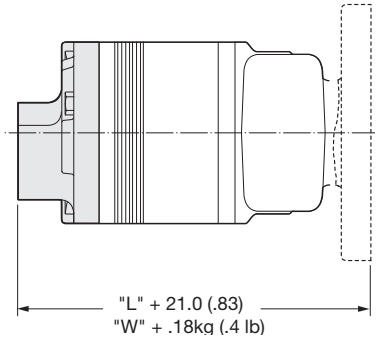

English equivalents for metric specifications are shown in ( ).

WARNING
This product can expose you to chemicals including lead and DEHP, which are known to the State of California to cause cancer, and birth defects or other reproductive harm. For more information go to www.p65warnings.ca.gov

Tel: +45 63 12 83 00 | Email: ps@hymatik.com | www.hymatik.com | Hvidkaervej 27a, DK-5250 Odense SV, Denmark

Code: S
7/8"-14 SAE O-Ring

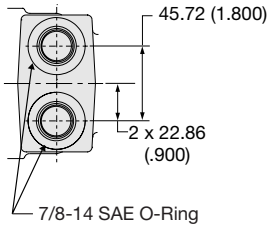

Code: P
1/2"-14 NPTF

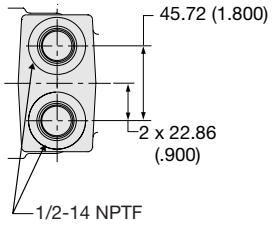

English equivalents for metric specifications are shown in ( ).

⚠ **WARNING**
This product can expose you to chemicals including lead and DEHP, which are known to the State of California to cause cancer, and birth defects or other reproductive harm. For more information go to www.p65warnings.ca.gov

Tel: +45 63 12 83 00 | Email: ps@hymatik.com | www.hymatik.com | Hvidkaervej 27a, DK-5250 Odense SV, Denmark

Code: M
Manifold

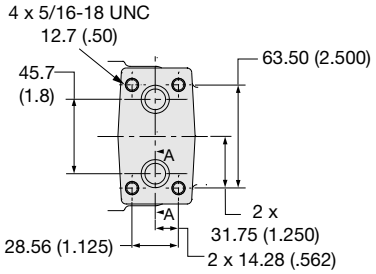

A - - A

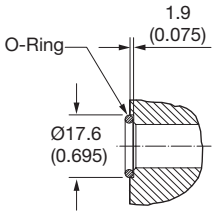

Motor with manifold mount is supplied with 2 o-rings (P/N 032790).

Zum Motor mit Universalanschluß werden 2 o-ringe geliefert.

Deux joints toriques sont livrés avec les moteurs a plan de raccordement universel.

Il blocchetto connessioni è corredato da 2 OR.

Code: W
G 1/2 BSPP
Milled Front

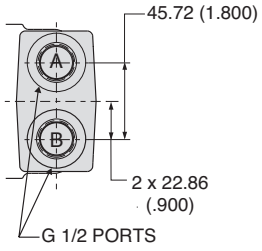

English equivalents for metric specifications are shown in ( ).

WARNING
This product can expose you to chemicals including lead and DEHP, which are known to the State of California to cause cancer, and birth defects or other reproductive harm. For more information go to www.p65warnings.ca.gov

Tel: +45 63 12 83 00 | Email: ps@hymatik.com | www.hymatik.com | Hvidkaervej 27a, DK-5250 Odense SV, Denmark

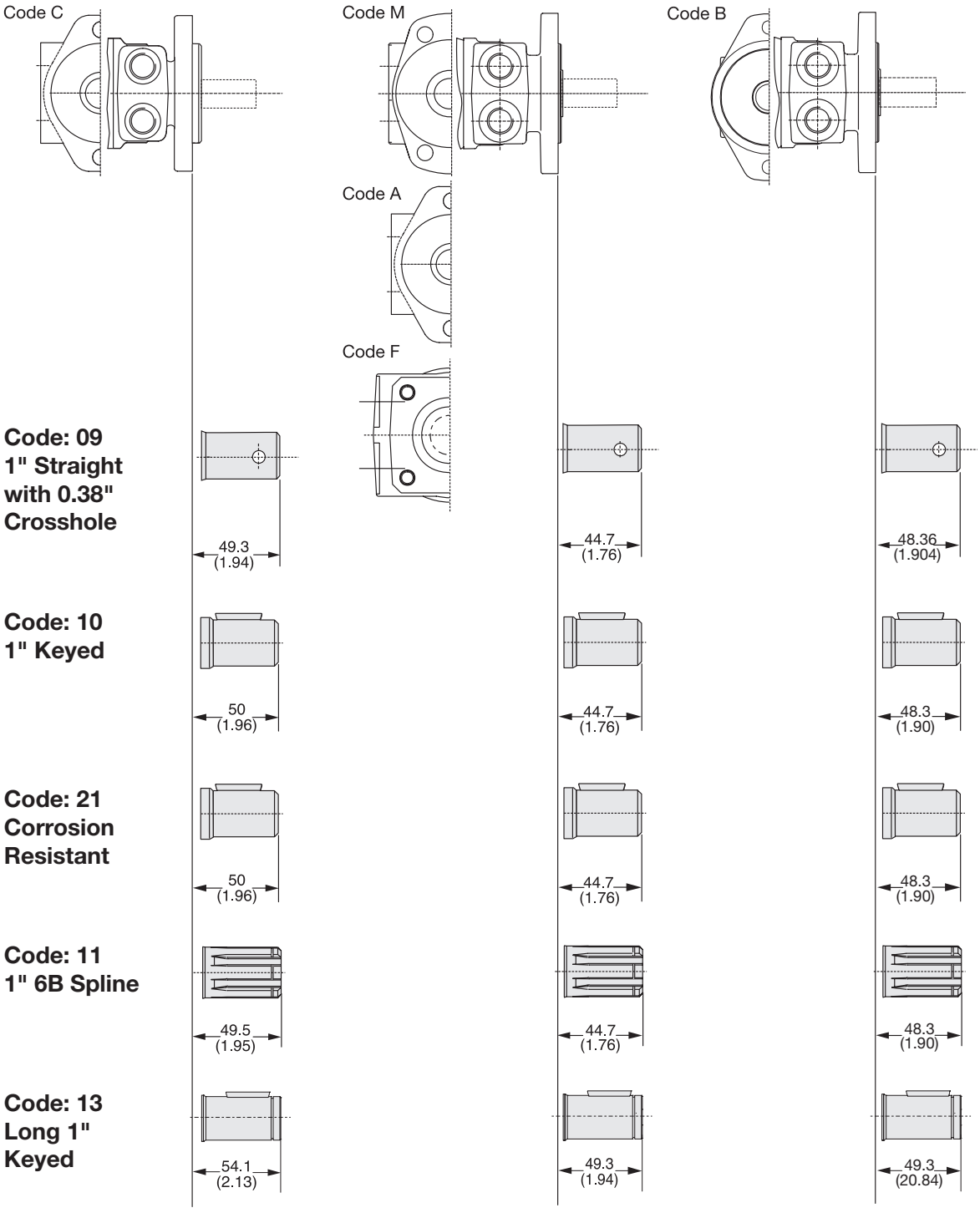

English equivalents for metric specifications are shown in ( ).

002 TB.indd, b

WARNING
This product can expose you to chemicals including lead and DEHP, which are known to the State of California to cause cancer, and birth defects or other reproductive harm. For more information go to www.p65warnings.ca.gov

Tel: +45 63 12 83 00 | Email: ps@hymatik.com | www.hymatik.com | Hvidkaervej 27a, DK-5250 Odense SV, Denmark

Code: 09
1" Straight with 0.38" Crosshole

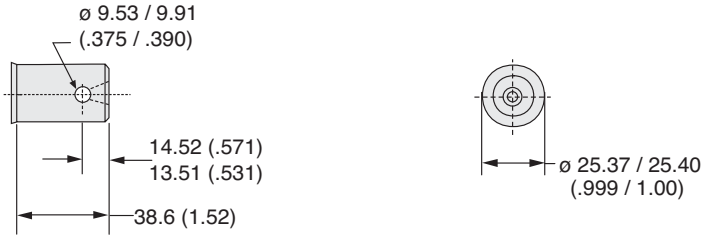

Code: 10
1" Keyed

Code: 21
1" Keyed Corrosion Resistant

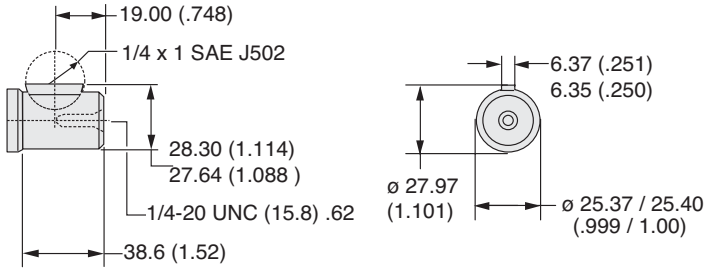

Code: 11
1" 6B Spline

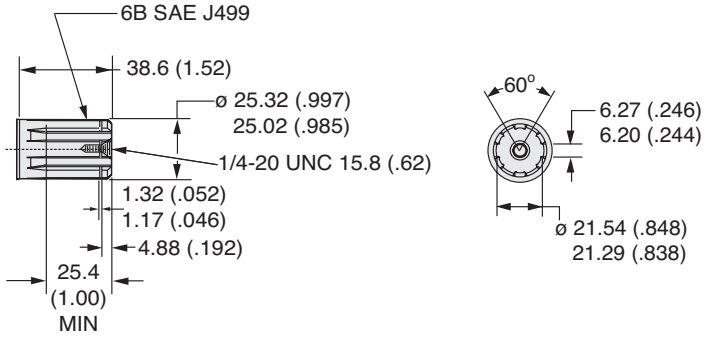

Code: 13
Long 1" Keyed

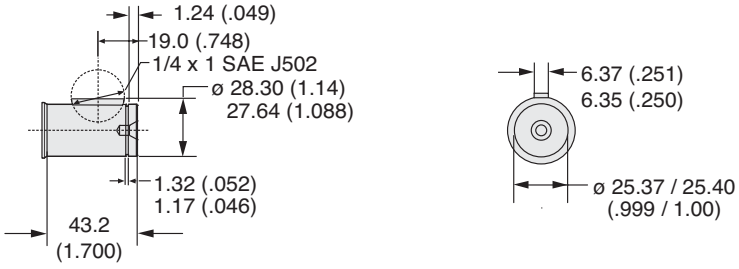

English equivalents for metric specifications are shown in ( ).

WARNING
This product can expose you to chemicals including lead and DEHP, which are known to the State of California to cause cancer, and birth defects or other reproductive harm. For more information go to www.p65warnings.ca.gov

Tel: +45 63 12 83 00 | Email: ps@hymatik.com | www.hymatik.com | Hvidkaervej 27a, DK-5250 Odense SV, Denmark

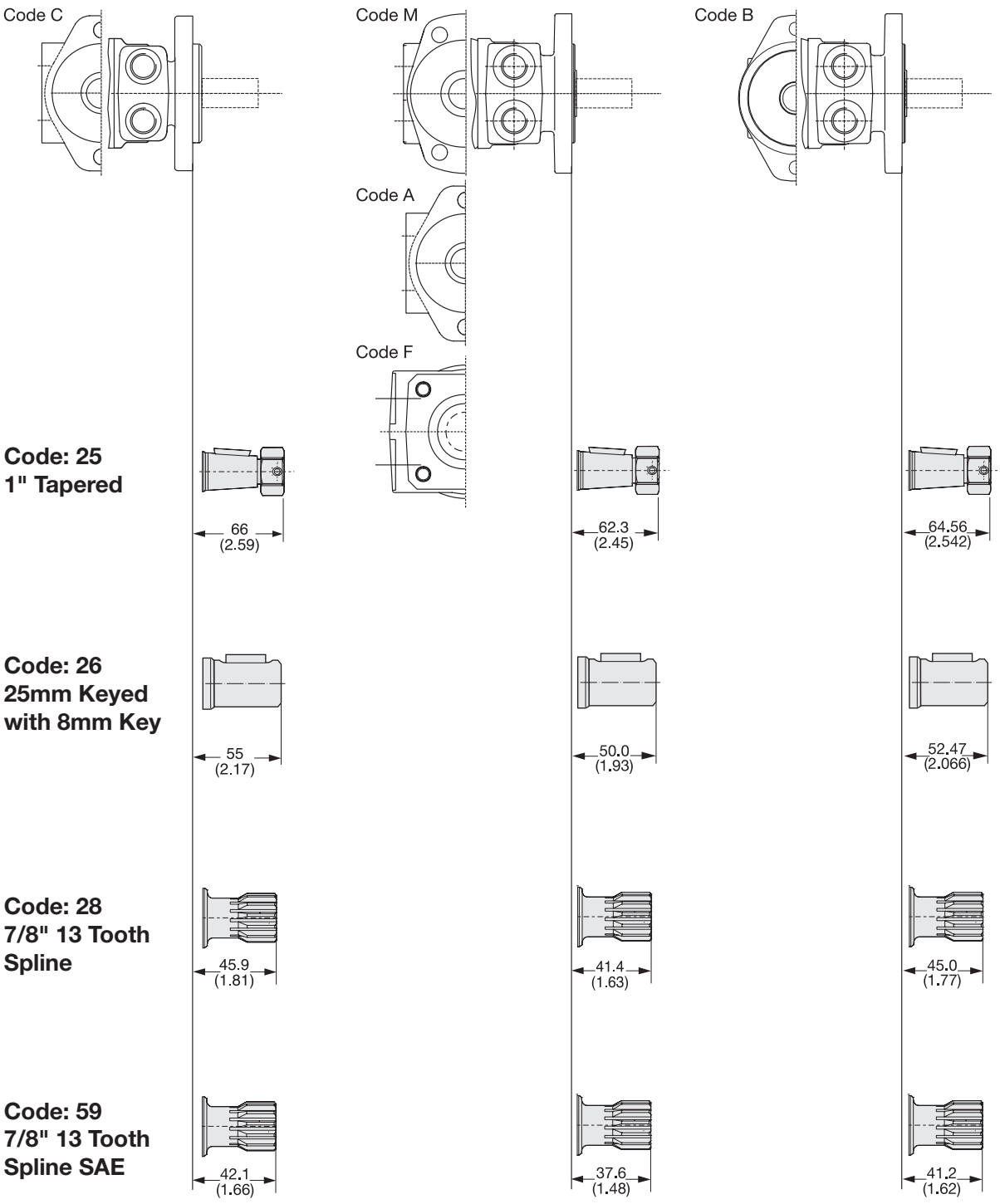

English equivalents for metric specifications are shown in ( ).

002 TB.indd, b

WARNING
This product can expose you to chemicals including lead and DEHP, which are known to the State of California to cause cancer, and birth defects or other reproductive harm. For more information go to www.p65warnings.ca.gov

Tel: +45 63 12 83 00 | Email: ps@hymatik.com | www.hymatik.com | Hvidkaervej 27a, DK-5250 Odense SV, Denmark

Code: 25
1" Tapered

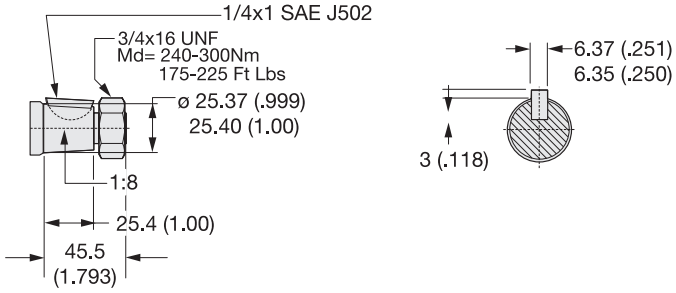

Code: 26
25mm Keyed
with 8mm Key

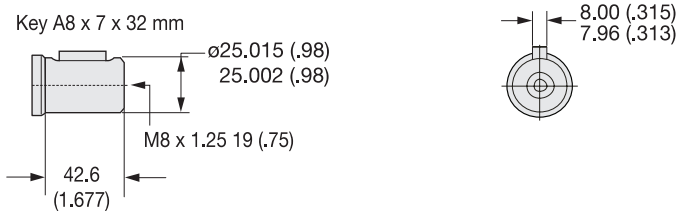

Code: 28
7/8" 13 Tooth
Spline

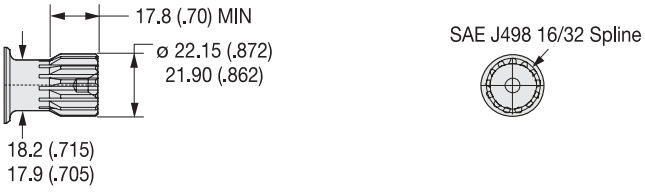

Code: 59
7/8" 13 Tooth
Spline SAE



English equivalents for metric specifications are shown in ( ).

WARNING
This product can expose you to chemicals including lead and DEHP, which are known to the State of California to cause cancer, and birth defects or other reproductive harm. For more information go to www.p65warnings.ca.gov

Tel: +45 63 12 83 00 | Email: ps@hymatik.com | www.hymatik.com | Hvidkaervej 27a, DK-5250 Odense SV, Denmark

15 Displacements **15 Schluckvolumen** **15 Cylindrée** **15 Despazamientos**	(2.2 – 24.0 in³/rev) **36 . . . 390 cm³/rev**

	Cont	**Int**
Maximum Pressure **Eingangsdruck** Chaute de pression max. **Presion Maxima**	(1800 psid) **. . .125 bar**	(2400 psid) **. . .165 bar**

Maximum Oil Flow **Schluckstrom** **Débit d'huile** **Caudal Maximo de Aceite**	(15 gpm) **. . . 57 lpm**
Maximum Speed **Drehzahl** **Vitesse de rotation** **Velocidad Maxima**	(932 rpm) **932 rpm**

	Cont	**Int**
Maximum Torque **Max Drehmoment** **Couple Maxi** **Torque Maximo**	(2000 lb in) **226 Nm**	(2000 lb in) **226 Nm**

Maximum Side Load at Key **Seitenlast** **Charges latèrales** **Carga Maxima Lateral**	(300 lb) **. . . 1340 N**

A Stainless Steel Low Speed, High Torque Motor

This motor utilizes a stainless steel front housing and output shaft, with a glass filled polypropylene rear cover for the ultimate in corrosion protection. It is designed for use under water or in harsh environments where it will be exposed to water or corrosive chemicals. Features such as roller vanes, high pressure shaft seal and full flow spline lubrication are standard.



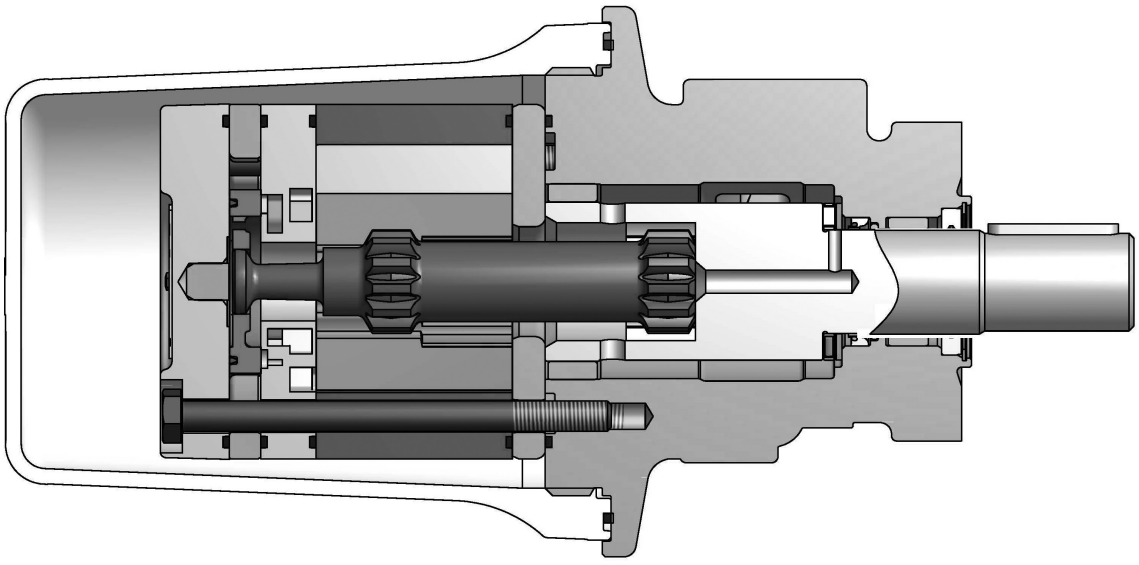

TS	XXXX	X	XX	0	XXXX
Series	Displacement Schluckvolumen Cylindrée Desplazamiento	Mounting/Ports Gehäuse/Anschluß Carter/Plan de raccordement Montaje/Lumbreras	Shaft Welle Arbre Eje	Rotation Drehrichtung Direction de rotation Rotacion	Options Opciones

Code	cm^3/U cm^3/tr $cm^3/giro$ in^3/rev
0036	36 / 2.2
0045	41 / 2.5
0050	49 / 3.0
0065	65 / 4.0
0080	82 / 5.0
0100	98 / 6.0
0130	130 / 8.0
0165	163 / 10.0
0195	195 / 11.9
0230	228 / 13.9
0260	260 / 15.9
0295	293 / 17.9
0330	328 / 20.0
0365	370 / 22.6
0390	392 / 24.0

Code	Mounting/Ports
FS	4 Bolt w/3/8-16 UNC, 7/8-14 SAE 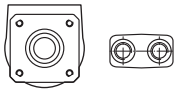

Code	Shaft
77	1" Square Keyed Stainless Steel 

Code	Rotation
0	Standard 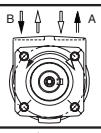
1	Reverse Timed Manifold 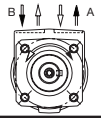

Code	Options
AAXH	Fluorocarbon Body, Shaft, Dirt & Water Seals. High Temperature Commutator Seals

Performance Data / Leistungsdaten
Puissance / Datos Tecnicos

LSHT Torqmotors™ and Nichols™ Motors
TS Series / Serie / Série HY13-1590-011/US,EU

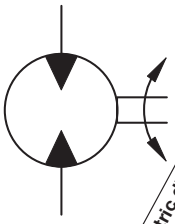

Motor Series TS	Geometric displacement Geom. Schluckvolumen Cylindrée Desplazamientos cm³/rev in³/rev	Max. speed @ Max. intermittent flow Max. Drehzahl Intermittierender Betrieb: Vitesse de rotation maxi Velocidad maxima a caudal intermitente maximo rev/min	Max. oil flow Max. Schluckstrom Débit d'huile maxi Caudal Maximo de Aceite *cont / int** l/min g/min		Max. Differential Pressure Max. Druckgefälle Chute de pression maxi Presion diferencial maxima *cont / int** bar psid		Max. supply pressure Max. Eingangsdruck Pression maxi entrée Presion maxima de alimentacion *max* bar psig	Max. torque Max. Drehmoment Couple maxi Torque Maximo *cont / int** Nm lb-in		Max. performance Max. Leistungsabgabe Puissance de sortie maxi Maximo redimiento *max* KW HP	Min. starting torque Min. Anlaufmoment Couple min. fourni au dé manrage Torque minimo de arranque *cont / int** Nm lb-in	
TS 0036	**36** 2.2	932	**34** 9	**34** 9	**125** 1800	165 2400	**190** 2750	**48** 427	**67** 596	**6.6** 8.8	**44** 385	**50** 440
TS 0045	**41** 2.5	805	**34** 9	**34** 9	**125** 1800	**165** 2400	**190** 2750	**64** 526	**88** 731	**7.2** 9.7	**39** 341	**52** 461
TS 0050	**49** 3.0	678	**34** 9	**34** 9	**125** 1800	**165** 2400	**190** 2750	**78** 693	**107** 946	**7.5** 10.1	**36** 319	**70** 619
TS 0065	**65** 4.0	511	**34** 9	**34** 9	**125** 1800	**165** 2400	**190** 2750	**107** 946	**145** 1284	**7.8** 10.4	**66** 582	**99** 977
TS 0080	**82** 5.0	409	**34** 9	**34** 9	**125** 1800	**165** 2400	**190** 2750	**135** 1193	**184** 1624	**7.8** 10.5	**92** 816	**139** 1226
TS 0100	**98** 6.0	454	**45** 12	**45** 12	**125** 1800	**165** 2400	**190** 2750	**160** 1411	**217** 1917	**10.2** 13.8	**119** 1050	**158** 1400
TS 0130	**130** 8.0	430	**45** 12	**57** 15	**131** 1900	**131** 1900	**190** 2750	**226** 2000	**226** 2000	**10.1** 13.6	**172** 1520	**172** 1520
TS 0165	**163** 10.0	343	**45** 12	**57** 15	**103** 1500	**103** 1500	**190** 2750	**226** 2000	**226** 2000	**8.1** 10.9	**165** 1460	**165** 1460
TS 0195	**195** 11.9	287	**45** 12	**57** 15	**83** 1200	**83** 1200	**190** 2750	**226** 2000	**226** 2000	**6.8** 9.1	**179** 1586	**179** 1586
TS 0230	**228** 13.9	246	**45** 12	**57** 15	**76** 1100	**76** 1100	**190** 2750	**226** 2000	**226** 2000	**5.8** 7.8	**190** 1680	**190** 1680
TS 0260	**260** 15.9	216	**45** 12	**57** 15	**69** 1000	**69** 1000	**190** 2750	**226** 2000	**226** 2000	**5.1** 6.9	**188** 1660	**188** 1660
TS 0295	**293** 17.9	191	**45** 12	**57** 15	**62** 900	**62** 900	**190** 2750	**226** 2000	**226** 2000	**4.6** 6.1	**181** 1600	**181** 1600
TS 0330	**328** 20.0	171	**45** 12	**57** 15	**41** 600	**41** 600	**190** 2750	**226** 2000	**226** 2000	**4.0** 5.4	**181** 1600	**181** 1600
TS 0365	**370** 22.6	151	**45** 12	**57** 15	**41** 600	**41** 600	**190** 2750	**226** 2000	**226** 2000	**3.6** 4.8	**191** 1690	**191** 1690
TS 0390	**392** 24.0	143	**45** 12	**57** 15	**41** 600	**41** 600	**190** 2750	**226** 2000	**226** 2000	**3.4** 4.5	**179** 1580	**179** 1580

Performance data based on testing using 10W40 oil with a viscosity of 43,1 cSt. (200 SUS) at 54° C (130° F.). Performance data is typical. Actual data may vary slightly from one production motor to another.

Les donnees sur les performances sont basees sur des tests utilisant de l'huile 10W40 d'une viscosite de 200 SUS a 54°C (130°F). Ces donnees correspondent a des situations typiques. Les donnees reelles peuvent varier legerement d'un moteur de production a l'autre.

Leistungsdaten sind gemessen mit SAE 10W40 bei einer Viskositaet von 43,1 Cst bei 54°C. Geringfuegige Abweichungen von den Katalogdaten sind moeglich.

Datos tecnicos obtenidos con aceite 10W40 de 200 SUS de viscosidad a 54°C (130°F). Los datos proporcionados son valores tipcos. Los valores exactos reales podrian tener una pequena variacion entre distintos motores.

* Intermittent operation rating applies to 10% of every minute.
Intermittierende Werte maximal 10% von jeder Betriebsminute.
Fonctionnement interm. 10% max. de chaque minute d`utilisation.
Capacidad de funcionamiento intermitente valida para 10% por cada minuto.

WARNING
This product can expose you to chemicals including lead and DEHP, which are known to the State of California to cause cancer, and birth defects or other reproductive harm. For more information go to www.p65warnings.ca.gov

Tel: +45 63 12 83 00 | Email: ps@hymatik.com | www.hymatik.com | Hvidkaervej 27a, DK-5250 Odense SV, Denmark

TS 0036

2.2 cu in / rev

PRESSURE (PSID)

Flow (GPM)	500	1000	1500	1800	2000	2400
.5	109 **46**	225 **37**	344 **26**	419 **20**	470 **15**	567 **7**
1	111 **99**	230 **89**	351 **78**	429 **71**	478 **68**	579 **58**
2	112 **203**	236 **192**	363 **179**	442 **172**	493 **170**	598 **159**
3	112 **307**	241 **296**	369 **283**	449 **276**	503 **270**	609 **259**
4	108 **413**	241 **398**	372 **383**	452 **376**	508 **371**	619 **360**
5	104 **517**	238 **502**	370 **487**	454 **478**	507 **473**	621 **460**
7	88 **725**	225 **710**	360 **694**	444 **681**	500 **674**	615 **661**
9	71 **933**	207 **916**	344 **896**	425 **885**	483 **876**	599 **862**
12	48 **1245**	184 **1225**	321 **1203**	405 **1192**	459 **1181**	572 **1163**

TORQUE (LB IN) 599
SPEED (RPM) 862

TS 0045

2.5 cu in / rev

PRESSURE (PSID)

Flow (GPM)	500	1000	1500	1800	2000	2400
.5	119 **32**	263 **18**	413 **3**			
1	123 **77**	277 **61**	425 **44**	518 **37**	581 **28**	705 **18**
2	132 **168**	290 **150**	450 **131**	542 **122**	606 **113**	719 **97**
3	136 **256**	296 **239**	462 **220**	557 **211**	623 **199**	748 **184**
4	132 **344**	296 **326**	464 **307**	567 **296**	635 **286**	768 **269**
5	129 **433**	290 **416**	464 **394**	567 **381**	639 **371**	779 **352**
7	119 **610**	284 **590**	460 **567**	565 **551**	635 **541**	779 **521**
9	109 **785**	277 **765**	450 **740**	555 **723**	625 **710**	768 **690**

TORQUE (LB IN) 779
SPEED (RPM) 521

■ Cont. □ Int.

Intermittent operation rating applies to 10% of every minute.

Fonctionnement interm. 10% max. de chaque minute d'utilisation.

Performance data based on testing using 10W40 oil with a viscosity of 200 SUS at 54° C (130° F.). Performance data is typical. Actual data may vary slightly from one production motor to another.

Les donnees sur les performances sont basees sur des tests utilisant de l'huile 10W40 d'une viscosite de 200 SUS a 54°C (130°F). Ces donnees correspondent a des situations typiques. Les donnees reelles peuvent varier legerement d'un moteur de production a l'autre.

Intermittierende Werte maximal 10% von jeder Betriebsminute.

Capacidad de funcionamiento intermitente valida para 10% por cada minuto.

Leistungsdaten sind gemessen mit SAE 10W40 bei einer Viskositaet von 43,1 Cst bei 54°C. Geringfuegige Abweichungen von den Katalogdaten sind moeglich.

Datos tecnicos obtenidos con aceite 10W40 de 200 SUS de viscosidad a 54°C (130°F). Los datos proporcionados son valores tipcos. Los valores exactos reales podrian tener una pequena variacion entre distintos motores.

WARNING
This product can expose you to chemicals including lead and DEHP, which are known to the State of California to cause cancer, and birth defects or other reproductive harm. For more information go to www.p65warnings.ca.gov

Tel: +45 63 12 83 00 | Email: ps@hymatik.com | www.hymatik.com | Hvidkaervej 27a, DK-5250 Odense SV, Denmark

TS 0050

3.0 cu in / rev

Flow (GPM)	PRESSURE (PSID) 500	1000	1500	1800	2000	2400
.5	146 **25**	324 **13**	506 **0**			
1	156 **66**	338 **50**	521 **35**	631 **28**	701 **20**	842 **9**
2	166 **141**	359 **127**	555 **110**	666 **102**	742 **94**	877 **80**
3	162 **218**	365 **203**	566 **186**	688 **176**	764 **168**	912 **153**
4	164 **295**	361 **279**	570 **261**	693 **251**	775 **242**	936 **227**
5	156 **372**	359 **355**	568 **337**	691 **327**	779 **317**	947 **302**
7	146 **525**	350 **506**	561 **486**	691 **474**	775 **466**	949 **448**
9	135 **678**	338 **659**	551 **638**	680 **623**	766 **615**	939 **596**

TORQUE (LB IN) 939
SPEED (RPM) 596

TS 0065

4.0 cu in / rev

Flow (GPM)	PRESSURE (PSID) 500	1000	1500	1800	2000	2400
.5	217 **22**	459 **14**	707 **6**	862 **1**		
1	225 **51**	479 **42**	735 **34**	887 **29**	992 **24**	1194 **17**
2	237 **108**	496 **98**	761 **90**	921 **85**	1028 **81**	1225 **70**
3	237 **166**	504 **156**	777 **147**	941 **140**	1045 **136**	1251 **126**
4	228 **224**	501 **214**	777 **203**	946 **197**	1054 **192**	1273 **181**
5	225 **281**	496 **271**	775 **260**	946 **252**	1059 **247**	1282 **237**
7	208 **396**	485 **385**	763 **373**	938 **364**	1051 **359**	1282 **347**
9	194 **511**	468 **499**	749 **485**	924 **476**	1037 **470**	1265 **457**

TORQUE (LB IN) 1282
SPEED (RPM) 347

☒ Cont. ☐ Int.

Intermittent operation rating applies to 10% of every minute.

Fonctionnement interm. 10% max. de chaque minute d'utilisation.

Performance data based on testing using 10W40 oil with a viscosity of 200 SUS at 54° C (130° F.). Performance data is typical. Actual data may vary slightly from one production motor to another.

Les donnees sur les performances sont basees sur des tests utilisant de l'huile 10W40 d'une viscosite de 200 SUS a 54°C (130°F). Ces donnees correspondent a des situations typiques. Les donnees reelles peuvent varier legerement d'un moteur de production a l'autre.

Intermittierende Werte maximal 10% von jeder Betriebsminute.

Capacidad de funcionamiento intermitente valida para 10% por cada minuto.

Leistungsdaten sind gemessen mit SAE 10W40 bei einer Viskositaet von 43,1 Cst bei 54°C. Geringfuegige Abweichungen von den Katalogdaten sind moeglich.

Datos tecnicos obtenidos con aceite 10W40 de 200 SUS de viscosidad a 54°C (130°F). Los datos proporcionados son valores tipcos. Los valores exactos reales podrian tener una pequena variacion entre distintos motores.

⚠ **WARNING**
This product can expose you to chemicals including lead and DEHP, which are known to the State of California to cause cancer, and birth defects or other reproductive harm. For more information go to www.p65warnings.ca.gov

Tel: +45 63 12 83 00 | Email: ps@hymatik.com | www.hymatik.com | Hvidkaervej 27a, DK-5250 Odense SV, Denmark

TS 0080

5.0 cu in / rev

PRESSURE (PSID)

Flow (GPM)	500	1000	1500	1800	2000	2400
.5	259 **18**	563 **10**	881 **5**	1078 **1**		
1	274 **40**	589 **33**	911 **26**	1100 **22**	1230 **19**	1489 **11**
2	285 **86**	615 **78**	952 **70**	1144 **67**	1281 **63**	1530 **53**
3	293 **132**	630 **124**	970 **116**	1174 **110**	1311 **106**	1570 **98**
4	285 **179**	630 **171**	978 **161**	1185 **155**	1330 **152**	1604 **142**
5	285 **226**	626 **216**	978 **206**	1196 **200**	1341 **196**	1626 **185**
7	267 **317**	622 **307**	974 **296**	1189 **290**	1337 **285**	1626 **275**
9	256 **410**	604 **398**	959 **387**	1178 **379**	1322 **375**	1611 **362**

TORQUE (LB IN) 1611
SPEED (RPM) 362

TS 0100

6.0 cu in / rev

PRESSURE (PSID)

Flow (GPM)	500	1000	1500	1800	2000	2400
.5	316 **16**	674 **13**	1045 **9**	1267 **7**	1411 **4**	1708 **0**
1	327 **34**	698 **32**	1072 **27**	1298 **25**	1454 **23**	1743 **18**
2	339 **74**	725 **69**	1111 **64**	1353 **61**	1509 **58**	1805 **53**
3	351 **111**	741 **107**	1146 **102**	1388 **98**	1544 **95**	1852 **89**
4	351 **148**	752 **143**	1162 **139**	1404 **135**	1571 **132**	1887 **126**
5	347 **187**	749 **183**	1170 **176**	1415 **172**	1583 **169**	1910 **162**
7	320 **264**	737 **257**	1162 **250**	1415 **246**	1587 **242**	1926 **235**
9	308 **339**	721 **333**	1142 **325**	1400 **319**	1571 **316**	1910 **307**
12	257 **454**	674 **446**	1096 **437**	1474 **430**	1524 **426**	1864 **418**

TORQUE (LB IN) 1910
SPEED (RPM) 307

■ Cont. □ Int.

Intermittent operation rating applies to 10% of every minute.

Fonctionnement interm. 10% max. de chaque minute d'utilisation.

Performance data based on testing using 10W40 oil with a viscosity of 200 SUS at 54° C (130° F.). Performance data is typical. Actual data may vary slightly from one production motor to another.

Les donnees sur les performances sont basees sur des tests utilisant de l'huile 10W40 d'une viscosite de 200 SUS a 54°C (130°F). Ces donnees correspondent a des situations typiques. Les donnees reelles peuvent varier legerement d'un moteur de production a l'autre.

Intermittierende Werte maximal 10% von jeder Betriebsminute.

Capacidad de funcionamiento intermitente valida para 10% por cada minuto.

Leistungsdaten sind gemessen mit SAE 10W40 bei einer Viskositaet von 43,1 Cst bei 54°C. Geringfuegige Abweichungen von den Katalogdaten sind moeglich.

Datos tecnicos obtenidos con aceite 10W40 de 200 SUS de viscosidad a 54°C (130°F). Los datos proporcionados son valores tipcos. Los valores exactos reales podrian tener una pequena variacion entre distintos motores.

⚠ WARNING
This product can expose you to chemicals including lead and DEHP, which are known to the State of California to cause cancer, and birth defects or other reproductive harm. For more information go to www.p65warnings.ca.gov

Tel: +45 63 12 83 00 | Email: ps@hymatik.com | www.hymatik.com | Hvidkaervej 27a, DK-5250 Odense SV, Denmark

TS 0130

8.0 cu in / rev

PRESSURE (PSID)

Flow (GPM)	500	1000	1500	1800	1900
.5	455 **11**	966 **10**	1485 **7**	1802 **5**	1897 **4**
1	463 **27**	983 **24**	1511 **21**	1836 **19**	1931 **18**
2	476 **55**	1018 **52**	1563 **49**	1893 **46**	1988 **45**
3	485 **84**	1039 **81**	1594 **77**	1927 **73**	2027 **73**
4	489 **113**	1048 **109**	1611 **105**	1944 **103**	2044 **101**
5	481 **142**	1044 **138**	1615 **133**	1953 **130**	2057 **129**
7	459 **199**	1026 **195**	1598 **190**	1944 **186**	2044 **185**
9	411 **257**	983 **252**	1568 **246**	1914 **242**	2022 **241**
12	342 **343**	914 **338**	1494 **331**	1874 **327**	1953 **325**
15	260 **430**	823 **424**	1394 **416**	1745 **411**	1849 **410**

TORQUE (LB IN) 1953
SPEED (RPM) 325

TS 0165

10.0 cu in / rev

PRESSURE (PSID)

Flow (GPM)	250	500	1000	1250	1500
.5	227 **12**	537 **9**	1148 **7**	1461 **6**	1772 **4**
1	237 **23**	554 **21**	1177 **18**	1496 **16**	1813 **15**
2	247 **46**	578 **44**	1226 **40**	1560 **38**	1891 **37**
3	254 **69**	591 **67**	1263 **63**	1600 **61**	1936 **59**
4	251 **91**	595 **89**	1276 **86**	1621 **84**	1965 **82**
5	239 **115**	587 **113**	1288 **109**	1634 **107**	1981 **104**
7	204 **162**	562 **159**	1267 **154**	1627 **151**	1985 **149**
9	155 **208**	517 **205**	1230 **200**	1594 **197**	1956 **194**
12	61 **277**	427 **274**	1140 **268**	1509 **265**	1874 **261**
15		324 **343**	1029 **337**	1394 **334**	1755 **331**

TORQUE (LB IN) 1956
SPEED (RPM) 194

☐ Cont. ☐ Int.

Intermittent operation rating applies to 10% of every minute.

Fonctionnement interm. 10% max. de chaque minute d'utilisation.

Performance data based on testing using 10W40 oil with a viscosity of 200 SUS at 54° C (130° F.). Performance data is typical. Actual data may vary slightly from one production motor to another.

Les donnees sur les performances sont basees sur des tests utilisant de l'huile 10W40 d'une viscosite de 200 SUS a 54°C (130°F). Ces donnees correspondent a des situations typiques. Les donnees reelles peuvent varier legerement d'un moteur de production a l'autre.

Intermittierende Werte maximal 10% von jeder Betriebsminute.

Capacidad de funcionamiento intermitente valida para 10% por cada minuto.

Leistungsdaten sind gemessen mit SAE 10W40 bei einer Viskositaet von 43,1 Cst bei 54°C. Geringfuegige Abweichungen von den Katalogdaten sind moeglich.

Datos tecnicos obtenidos con aceite 10W40 de 200 SUS de viscosidad a 54°C (130°F). Los datos proporcionados son valores tipcos. Los valores exactos reales podrian tener una pequena variacion entre distintos motores.

⚠ **WARNING**
This product can expose you to chemicals including lead and DEHP, which are known to the State of California to cause cancer, and birth defects or other reproductive harm. For more information go to www.p65warnings.ca.gov

Tel: +45 63 12 83 00 | Email: ps@hymatik.com | www.hymatik.com | Hvidkaervej 27a, DK-5250 Odense SV, Denmark

TS 0195

11.9 cu in / rev

PRESSURE (PSID)

	250	500	750	1000	1200
.5	318 **9.4**	701 **8.9**	1095 **8.5**	1504 **7.7**	1780 **6.8**
1	336 **19**	720 **18**	1119 **17**	1535 **17**	1807 **17**
2	351 **38**	744 **38**	1152 **37**	1579 **36**	1854 **36**
3	363 **58**	760 **57**	1172 **56**	1602 **55**	1882 **54**
4	355 **76**	756 **76**	1173 **75**	1610 **74**	1890 **73**
5	341 **95**	744 **95**	1166 **94**	1610 **93**	1886 **92**
7	300 **135**	705 **134**	1128 **132**	1575 **131**	1850 **130**
9	241 **173**	646 **172**	1069 **170**	1516 **169**	1791 **168**
12	142 **232**	543 **230**	961 **229**	1398 **227**	1677 **226**
15	9 **288**	409 **287**	824 **286**	1256 **284**	1539 **283**

TORQUE (LB IN) 1677
SPEED (RPM) 226

Flow (GPM)

TS 0230

13.9 cu in / rev

PRESSURE (PSID)

	250	500	750	1000	1100
.5	373 **8.3**	806 **8.2**	1248 **7.8**	1714 **7.2**	1836 **6.9**
1	382 **16.6**	820 **16.4**	1267 **15.8**	1733 **15.1**	1865 **14.8**
2	409 **33**	850 **32**	1298 **32**	1768 **31**	1899 **31**
3	414 **49**	859 **49**	1316 **48**	1802 **47**	1919 **47**
4	408 **66**	854 **65**	1323 **65**	1816 **64**	1938 **64**
5	383 **83**	845 **82**	1318 **81**	1821 **80**	1943 **79**
7	338 **113**	811 **114**	1292 **113**	1797 **112**	1938 **111**
9	261 **147**	747 **147**	1237 **146**	1738 **145**	1899 **144**
12	111 **199**	615 **199**	1120 **197**	1626 **194**	1800 **193**
15		479 **246**	987 **244**	1473 **241**	1650 **240**

TORQUE (LB IN) 1899
SPEED (RPM) 144

Flow (GPM)

☐ Cont. ☐ Int.

Intermittent operation rating applies to 10% of every minute.

Fonctionnement interm. 10% max. de chaque minute d'utilisation.

Performance data based on testing using 10W40 oil with a viscosity of 200 SUS at 54° C (130° F.). Performance data is typical. Actual data may vary slightly from one production motor to another.

Les donnees sur les performances sont basees sur des tests utilisant de l'huile 10W40 d'une viscosite de 200 SUS a 54°C (130°F). Ces donnees correspondent a des situations typiques. Les donnees reelles peuvent varier legerement d'un moteur de production a l'autre.

Intermittierende Werte maximal 10% von jeder Betriebsminute.

Capacidad de funcionamiento intermitente valida para 10% por cada minuto.

Leistungsdaten sind gemessen mit SAE 10W40 bei einer Viskositaet von 43,1 Cst bei 54°C. Geringfuegige Abweichungen von den Katalogdaten sind moeglich.

Datos tecnicos obtenidos con aceite 10W40 de 200 SUS de viscosidad a 54°C (130°F). Los datos proporcionados son valores tipcos. Los valores exactos reales podrian tener una pequena variacion entre distintos motores.

⚠ **WARNING**
This product can expose you to chemicals including lead and DEHP, which are known to the State of California to cause cancer, and birth defects or other reproductive harm. For more information go to www.p65warnings.ca.gov

Tel: +45 63 12 83 00 | Email: ps@hymatik.com | www.hymatik.com | Hvidkaervej 27a, DK-5250 Odense SV, Denmark

TS 0260

15.9 cu in / rev

PRESSURE (PSID)

	250	500	750	1000
.5	399 **7.2**	915 **6.9**	1431 **6.4**	1948 **6.0**
1	412 **14.5**	936 **14.0**	1460 **13.6**	1984 **13.1**
2	419 **29.0**	956 **28.3**	1493 **27.6**	2030 **26.8**
3	427 **43**	971 **43**	1516 **42**	2060 **41**
4	412 **58**	966 **57**	1521 **57**	2076 **56**
5	401 **71**	961 **71**	1521 **71**	2081 **70**
7	348 **101**	915 **100**	1483 **100**	2050 **99**
9	271 **130**	844 **129**	1416 **128**	1989 **128**
12	133 **174**	706 **173**	1278 **172**	1851 **171**
15		547 **216**	1117 **215**	1687 **214**

TORQUE (LB IN) 1851
SPEED (RPM) 171

Flow (GPM)

TS 0295

17.9 cu in / rev

PRESSURE (PSID)

	250	500	750	900
.5	384 **6.4**	1048 **6.0**	1713 **5.3**	2111 **4.9**
1	394 **12.6**	1068 **12.2**	1742 **11.7**	2146 **11.4**
2	397 **25.6**	1093 **25.1**	1788 **24.6**	2205 **24.3**
3	406 **39**	1107 **38**	1809 **37**	2229 **36**
4	397 **50**	1107 **50**	1818 **49**	2244 **49**
5	365 **64**	1088 **63**	1810 **62**	2244 **61**
7	316 **90**	1038 **89**	1761 **88**	2195 **87**
9	223 **115**	955 **114**	1687 **113**	2126 **112**
12	60 **154**	792 **153**	1524 **151**	1964 **150**
15		605 **191**	1325 **189**	1757 **188**

TORQUE (LB IN) 2126
SPEED (RPM) 112

Flow (GPM)

☐ Cont. ☐ Int.

Intermittent operation rating applies to 10% of every minute.

Fonctionnement interm. 10% max. de chaque minute d'utilisation.

Performance data based on testing using 10W40 oil with a viscosity of 200 SUS at 54° C (130° F.). Performance data is typical. Actual data may vary slightly from one production motor to another.

Les donnees sur les performances sont basees sur des tests utilisant de l'huile 10W40 d'une viscosite de 200 SUS a 54°C (130°F). Ces donnees correspondent a des situations typiques. Les donnees reelles peuvent varier legerement d'un moteur de production a l'autre.

Intermittierende Werte maximal 10% von jeder Betriebsminute.

Capacidad de funcionamiento intermitente valida para 10% por cada minuto.

Leistungsdaten sind gemessen mit SAE 10W40 bei einer Viskositaet von 43,1 Cst bei 54°C. Geringfuegige Abweichungen von den Katalogdaten sind moeglich.

Datos tecnicos obtenidos con aceite 10W40 de 200 SUS de viscosidad a 54°C (130°F). Los datos proporcionados son valores tipcos. Los valores exactos reales podrian tener una pequena variacion entre distintos motores.

⚠ **WARNING**
This product can expose you to chemicals including lead and DEHP, which are known to the State of California to cause cancer, and birth defects or other reproductive harm. For more information go to www.p65warnings.ca.gov

Tel: +45 63 12 83 00 | Email: ps@hymatik.com | www.hymatik.com | Hvidkaervej 27a, DK-5250 Odense SV, Denmark

TS 0330

20.0 cu in / rev

Flow (GPM) \ PRESSURE (PSID)	250	500	600
.5	481 **5.7**	1201 **5.1**	1489 **4.6**
1	469 **11.4**	1229 **11.1**	1533 **10.6**
2	416 **22.8**	1258 **22.5**	1594 **21.7**
3	377 **35**	1270 **34**	1627 **33**
4	323 **46**	1266 **45**	1643 **44**
5	252 **57**	1245 **56**	1643 **56**
7	154 **80**	1189 **79**	1602 **78**
9	55 **103**	1099 **102**	1517 **102**
12		913 **137**	1331 **136**
15		706 **171**	1087 **170**

TORQUE (LB IN) 1517
SPEED (RPM) 102

TS 0365

22.6 cu in / rev

Flow (GPM) \ PRESSURE (PSID)	250	500	600
.5	680 **5.1**	1405 **4.9**	1650 **4.6**
1	688 **10.2**	1438 **9.8**	1703 **9.7**
2	686 **20.4**	1479 **19.8**	1756 **19.6**
3	692 **30.3**	1495 **30.2**	1784 **30.0**
4	720 **40.2**	1487 **39.9**	1796 **39.8**
5	703 **50.6**	1466 **50.0**	1772 **49.8**
7	572 **70.6**	1373 **70.1**	1695 **69.9**
9	440 **91.4**	1251 **90.3**	1572 **89.9**
12	189 **121.5**	1014 **120.9**	1344 **120.7**
15		701 **151.1**	1022 **150.9**

TORQUE (LB IN) 1695
SPEED (RPM) 69.9

■ Cont. □ Int.

Intermittent operation rating applies to 10% of every minute.

Fonctionnement interm. 10% max. de chaque minute d'utilisation.

Performance data based on testing using 10W40 oil with a viscosity of 200 SUS at 54° C (130° F.). Performance data is typical. Actual data may vary slightly from one production motor to another.

Les donnees sur les performances sont basees sur des tests utilisant de l'huile 10W40 d'une viscosite de 200 SUS a 54°C (130°F). Ces donnees correspondent a des situations typiques. Les donnees reelles peuvent varier legerement d'un moteur de production a l'autre.

Intermittierende Werte maximal 10% von jeder Betriebsminute.

Capacidad de funcionamiento intermitente valida para 10% por cada minuto.

Leistungsdaten sind gemessen mit SAE 10W40 bei einer Viskositaet von 43,1 Cst bei 54°C. Geringfuegige Abweichungen von den Katalogdaten sind moeglich.

Datos tecnicos obtenidos con aceite 10W40 de 200 SUS de viscosidad a 54°C (130°F). Los datos proporcionados son valores tipcos. Los valores exactos reales podrian tener una pequena variacion entre distintos motores.

WARNING
This product can expose you to chemicals including lead and DEHP, which are known to the State of California to cause cancer, and birth defects or other reproductive harm. For more information go to www.p65warnings.ca.gov

Tel: +45 63 12 83 00 | Email: ps@hymatik.com | www.hymatik.com | Hvidkaervej 27a, DK-5250 Odense SV, Denmark

TS 0390

24.0 cu in / rev

PRESSURE (PSID)

Flow (GPM)	250	500	600
.5	604 **4.5**	1324 **4.0**	1492 **3.8**
1	640 **9.3**	1356 **9.2**	1540 **9.0**
2	690 **18.6**	1408 **18.1**	1608 **17.9**
3	700 **28.4**	1440 **28.1**	1664 **27.7**
4	705 **37.5**	1452 **37.0**	1692 **36.8**
5	715 **48.1**	1444 **47.1**	1712 **46.8**
7	642 **67.2**	1392 **66.2**	1692 **65.8**
9	496 **85.6**	1296 **85.1**	1616 **84.9**
12	292 **115.9**	1092 **114.5**	1412 **113.9**
15	62 **144.1**	832 **143.1**	1140 **142.7**

TORQUE (LB IN) 1616
SPEED (RPM) 84.9

☒ Cont. ☐ Int.

Intermittent operation rating applies to 10% of every minute.

Fonctionnement interm. 10% max. de chaque minute d'utilisation.

Performance data based on testing using 10W40 oil with a viscosity of 200 SUS at 54° C (130° F.). Performance data is typical. Actual data may vary slightly from one production motor to another.

Les donnees sur les performances sont basees sur des tests utilisant de l'huile 10W40 d'une viscosite de 200 SUS a 54°C (130°F). Ces donnees correspondent a des situations typiques. Les donnees reelles peuvent varier legerement d'un moteur de production a l'autre.

Intermittierende Werte maximal 10% von jeder Betriebsminute.

Capacidad de funcionamiento intermitente valida para 10% por cada minuto.

Leistungsdaten sind gemessen mit SAE 10W40 bei einer Viskositaet von 43,1 Cst bei 54°C. Geringfuegige Abweichungen von den Katalogdaten sind moeglich.

Datos tecnicos obtenidos con aceite 10W40 de 200 SUS de viscosidad a 54°C (130°F). Los datos proporcionados son valores tipcos. Los valores exactos reales podrian tener una pequena variacion entre distintos motores.

⚠ WARNING
This product can expose you to chemicals including lead and DEHP, which are known to the State of California to cause cancer, and birth defects or other reproductive harm. For more information go to www.p65warnings.ca.gov

Tel: +45 63 12 83 00 | Email: ps@hymatik.com | www.hymatik.com | Hvidkaervej 27a, DK-5250 Odense SV, Denmark

A 5/16-24 straight thread o-ring drain port is provided in the flange of the front housing. This port is to be connected to the reservoir. The purpose of this port is to relieve pressure in the polypropylene rear cover in the rare event of a motor section seal leak.

Maximum side load 300# at 1 inch from mounting face.

Shaft torque is limited to 2000 in-lbs since it is made from 316 stainless steel 1" keyed shaft. Other shaft types or shaft taper locks will increase allowable shaft torque.

Code: FS

4 Bolt,
7/8"-14 SAE
O-Ring

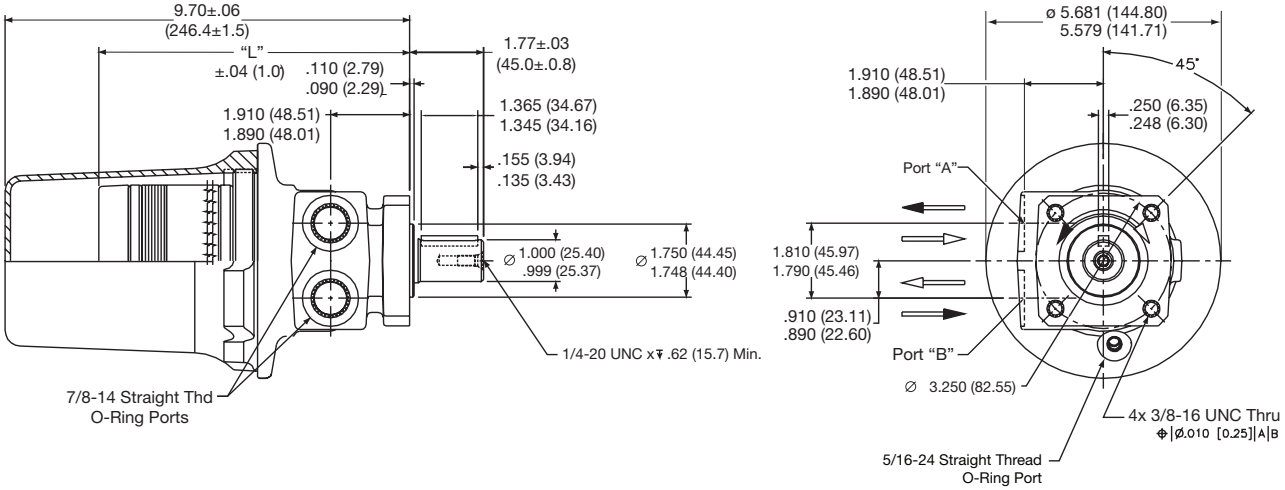

* Do not plug 5/16-24 drain port

Code FS disp.	0036	0045	0050	0065	0080	0100	0130	0165	0195	0230	0260	0295	0330	0365	0390
Weight/Gewicht kg	**8.3**	**8.3**	**8.4**	**8.5**	**8.7**	**8.8**	**9.0**	**9.3**	**9.8**	**9.9**	**10.1**	**10.3**	**10.7**	**11.0**	**11.1**
Poids/Peso (lb)	(18.3)	(18.4)	(18.5)	(18.8)	(19.1)	(19.4)	(19.9)	(20.6)	(21.5)	(21.8)	(22.3)	(22.8)	(23.5)	(24.2)	(24.5)
Length "L" mm	**164.4**	**165.5**	**167.0**	**170.2**	**173.3**	**176.5**	**182.9**	**189.2**	**195.6**	**201.9**	**208.3**	**214.6**	**221.0**	**229.6**	**233.7**
"L" (in)	(6.47)	(6.52)	(6.57)	(6.70)	(6.82)	(6.95)	(7.20)	(7.45)	(7.70)	(7.95)	(8.20)	(8.45)	(8.70)	(9.04)	(9.20)

English equivalents for metric specifications are shown in ( ).

WARNING
This product can expose you to chemicals including lead and DEHP, which are known to the State of California to cause cancer, and birth defects or other reproductive harm. For more information go to www.p65warnings.ca.gov

Tel: +45 63 12 83 00 | Email: ps@hymatik.com | www.hymatik.com | Hvidkaervej 27a, DK-5250 Odense SV, Denmark

15 Displacements	(2.2 – 24.0 in³/rev)
15 Schluckvolumen	**36 . . . 390 cm³/rev**
15 Cylindrée	
15 Despazamientos	

	Cont	Int
Maximum Pressure	(2030 psid)	(2750 psid)
Eingangsdruck	**. . .140 bar**	**. . .190 bar**
Chaute de pression max.		
Presion Maxima		

Maximum Oil Flow	(20 gpm)
Schluckstrom	**. . . 75 lpm**
Débit d'huile	
Caudal Maximo de Aceite	

Maximum Speed	(1142 rpm)
Drehzahl	**1142 rpm**
Vitesse de rotation	
Velocidad Maxima	

	Cont	Int
Maximum Torque	(4139 lb in)	(5728 lb in)
Max Drehmoment	**467 Nm**	**648 Nm**
Couple Maxi		
Torque Maximo		

Maximum Side Load at Key	(1500 lb)
Seitenlast	**. . . 6650 N**
Charges latèrales	
Carga Maxima Lateral	

An Improved Light Duty Low Speed, High Torque Motor

This light duty motor has higher pressure ratings than the TB motor, for applications requiring higher torque. Robust roller bearings withstand higher side loads and are suitable for chain and sprocket shaft connections. It uses high pressure shaft seals, robust roller bearings and high flow shaft seal cooling.



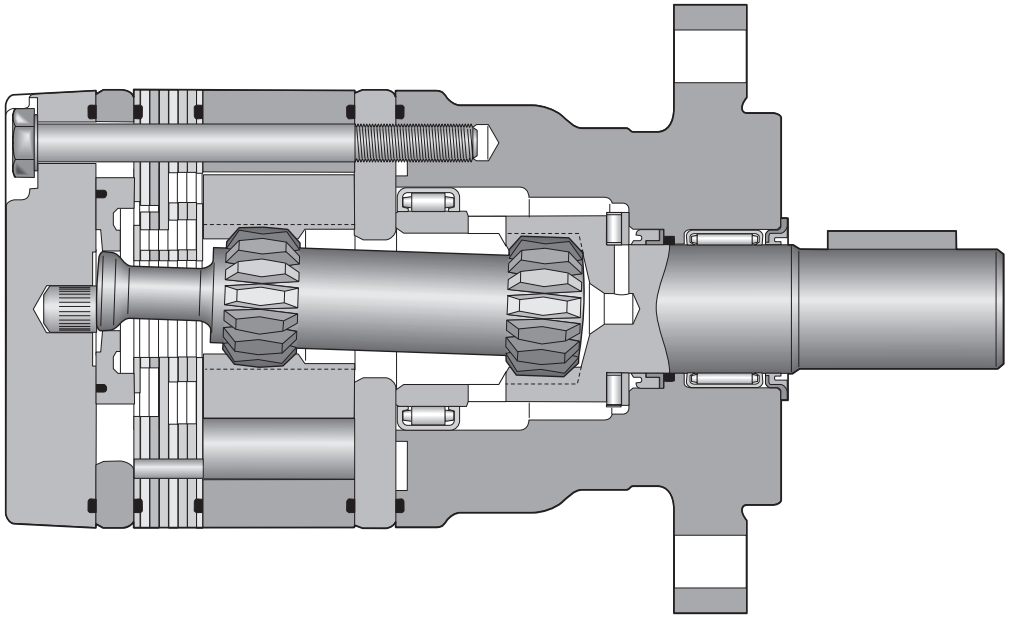

⚠ **WARNING**
This product can expose you to chemicals including lead and DEHP, which are known to the State of California to cause cancer, and birth defects or other reproductive harm. For more information go to www.p65warnings.ca.gov

TE

Series

XXXX

Displacement
Schluckvolumen
Cylindrée
Desplazamiento

Code	cm^3/U cm^3/tr $cm^3/giro$	in^3/rev
0036	36 /	2.2
0045	41 /	2.5
0050	49 /	3.0
0065	65 /	4.0
0080	82 /	5.0
0100	98 /	6.0
0130	130 /	8.0
0165	163 /	10.0
0195	195 /	11.9
0230	228 /	13.9
0260	260 /	15.9
0295	293 /	17.9
0330	328 /	20.0
0365	370 /	22.6
0390	392 /	24.0

XX

Mounting/Ports
Gehäuse/Anschluß
Carter/Plan de raccordement
Montaje/Lumbreras

Code	Mounting/Ports	
AM	SAE "A" 2 Bolt, 5/16-18 UNC Manifold	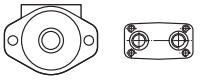
AP	SAE "A" 2 Bolt, 1/2-14 NPTF	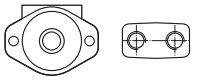
AS	SAE "A" 2 Bolt, 7/8-14 SAE	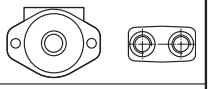
FP	4 Bolt w/3/8-16 UNC, 1/2-14 NPTF	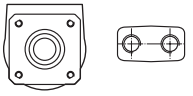
FS	4 Bolt w/3/8-16 UNC, 7/8-14 SAE	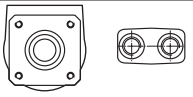
US	Wheel Mount, 7/8-14 SAE	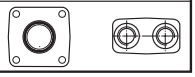

	Code	Mounting/Ports	
Custom Order	AR	SAE "A" 2 Bolt, Rear Port 3/4-16 SAE O-ring Axial	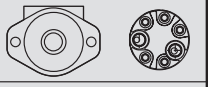
	CW	SAE "A" 2 Bolt, Long Pilot, G 1/2 BSPP	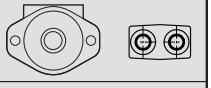
	FF	4 Bolt w/3/8-16 UNC, 3/4-14 SAE	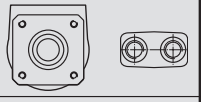
	FJ	4 Bolt Mt., 9/16 O-ring (SAE # 6)	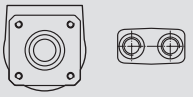
	JS	"US" w/Mach. Plt. Nose, 1/2 -13UNC C'bored mtg. Holes, 7/8 O-ring ports	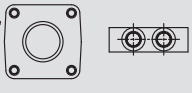
	UR	Wheel Mount, Rear Port 3/4-16 SAE O-ring Axial	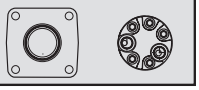

Shaded areas indicate custom order components. Standard pricing and delivery terms may not apply to these components. Please refer to the price list for details, or consult your Parker Pump Motor division Sales Resource.

WARNING
This product can expose you to chemicals including lead and DEHP, which are known to the State of California to cause cancer, and birth defects or other reproductive harm. For more information go to www.p65warnings.ca.gov

Ordering Information / Bestellschlüssel
System de Commande / Imformacion para pedidos

LSHT Torqmotors™ and Nichols™ Motors
TE Series / Serie / Série HY13-1590-011/US,EU

XX — Shaft / Welle / Arbre / Eje

Code	Shaft
10	1" Keyed 
11	1" 6B Spline 
13	Long 1" Keyed 
25	1" Tapered 
26	25mm Keyed w/ 8mm Key 
33	1" Tapered, 3/16 Key, 3/4-16 Thd. 

Custom Order		
	01	Long 6B Spline, Groove 
	09	1" dia., 0.38" Hole, 0.55" From End 
	12	Short 1" Tapered 
	21	1" Keyed Corrosion Resistant 
	22	25mm Str. w/7mm Key, 6mm Tap 
	41	Long 6B, 8mm Tap 

* Conforms to SAE B recommended length

0 — Rotation / Drehrichtung / Direction de rotation / Rotacion

Code	Rotation
0	Standard 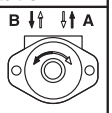
1	Reverse Timed Manifold 

Code	Rear Port Rotation
0	Standard 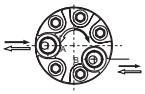
1	Reverse Timed Manifold 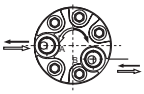

Rotation viewed from shaft end.

XXXX — Options / Opciones

Code	Options
AAAA[8]	"Standard", Black Paint
AAAB	"Standard", No Paint
AAAC[8]	"Standard", Double Paint
AABJ[1,8]	Free Running Rotor Set, Black Paint
AABT[4,8]	No Nut, Black Paint
AAFA	Fluorocarbon Seals, High Temp Commutator Seal, High Temp Section seals, No Paint
AAFW[8]	Fluorocarbon Seals, High Temp Commutator Seal, High Temp Section Seals, Black Paint
AAJH[4,8]	No Shaft Hardware, Fluorocarbon Seals, High Temp Commutator Seal, High Temp Section Seals, Spl paint, Black Paint
AAJL[4]	No Nut, No Paint
AAUP[4]	Fluorocarbon Seals, High Temp Commutator Seal, High Temp Section Seals, No Shaft Hardware, No Paint
AAVE[1,8]	Free Running Rotor Set, Fluorocarbon Seals, High Temp High Temp Section Seals, Commutator Seal, Black Paint
ABCW[4,5,8]	No Shaft Hardware, Fluorocarbon Seals, High Temperature Commutator Seal, High Temp Section Seals, Bidirectional shuttle (.062 Orifice) (11:00*), Black Paint
ABCZ[8]	Fluorocarbon Seals, Double paint, High Temp Commutator Seal, High Temp Section Seals
BBGS[4,5,8]	No Shaft Hardware, Fluorocarbon Seals, High Temperature Commutator Seal, High Temp Section Seals, 921 PSI Int Bidirectional Relief, Black Paint
BBGT[4,5,8]	No Shaft Hardware, Fluorocarbon Seals, High Temperature Commutator Seal, High Temp Section Seals, 1200 PSI Int Bidirectional Relief, Black Paint
BBGU[3,4,5,8]	No Shaft Hardware, Fluorocarbon Seals, High Temperature Commutator Seal, High Temp Section Seals, 2030 PSI Int Bidirectional Relief, Black Paint
BBGW[8]	No Shaft Hardware, Fluorocarbon Seals, High Temperature Commutator Seal, 1450 PSI Int Bidrectional Relief, Black Paint
BBHB[4,5,7,8]	No Shaft Hardware, Fluorocarbon Seals, High Temperature Commutator Seal, 2393 PSI Int Bidirectional Relief, Black Paint
FSEK[4,6,8]	No Shaft Hardware, Fluorocarbon Seals, High Temperature Commutator Seal, High Temp Section Seals, Parker ECD Speed Sensor, Black Paint
FSEN[4,6]	No Shaft Hardware, Fluorocarbon Seals, High Temperature Commutator Seal, High Temp Section Seals, Parker ECD Speed Sensor, No Paint

[1] Not applicable to 0365 & 0390 displacements
[3] Not applicable to 0330, 0365 or 0390 displacements
[4] No Nut with shaft code 12, 25 or 33
[5] Not applicable with FR or AR Mounting / Porting options
[6] Not applicable with shaft code 33
[7] Not applicable to 0260, 0295, 0330, 0365 or 0390 displacements
[8] Paint area all over except front and rear pilot and mounting flanges and shaft

Shaded areas indicate custom order components. Standard pricing and delivery terms may not apply to these components. Please refer to the price list for details, or consult your Parker Pump Motor division Sales Resource.

WARNING
This product can expose you to chemicals including lead and DEHP, which are known to the State of California to cause cancer, and birth defects or other reproductive harm. For more information go to www.p65warnings.ca.gov

Tel: +45 63 12 83 00 | Email: ps@hymatik.com | www.hymatik.com | Hvidkaervej 27a, DK-5250 Odense SV, Denmark

Performance Data / Leistungsdaten
Puissance / Datos Tecnicos

LSHT Torqmotors™ and Nichols™ Motors
TE Series / Serie / Série HY13-1590-011/US,EU

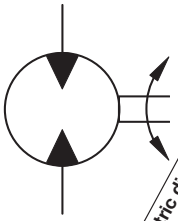

Motor Series TE	Geometric displacement / Geom. Schluckvolumen / Cylindrée / Desplazamientos cm³/rev in³/rev	Max. speed @ Max. intermittent flow / Max. Drehzahl Intermittierender Betrieb: / Vitesse de rotation maxi / Velocidad maxima a caudal intermitente maximo *Int* rev/min	Max. oil flow / Max. Schluckstrom / Débit d'huile maxi / Caudal Maximo de Aceite *cont / int** l/min g/min		Max. Differential Pressure / Max. Druckgefälle / Chute de pression maxi / Presion diferencial maxima *cont / int** bar psid		Max. supply pressure / Max. Eingangsdruck / Pression maxi entrée / Presion maxima de alimentacion *max* bar psig	Max. torque / Max. Drehmoment / Couple maxi / Torque Maximo *cont / int** Nm lb-in		Max. performance / Max. Leistungsabgabe / Puissance de sortie maxi / Maximo redinmiento *max* KW HP	Min. starting torque / Min. Anlaufmoment / Couple min. fourni au dé manrage / Torque mínimo de arranque *cont / int** Nm lb-in	
TE 0036	**36** 2.2	1141	**34** 9	**42** 11	**140** 2030	**190** 2750	**200** 2900	**54.6** 483	**71.1** 630	**8.5** 11.4	**44** 389	**52** 460
TE 0045	**41** 2.5	1024	**34** 9	**42** 11	**140** 2030	**190** 2750	**200** 2900	**71** 624	**99** 876	**10.4** 13.9	**44** 411	**64** 565
TE 0050	**49** 3.0	1020	**34** 9	**50** 13	**140** 2030	**190** 2750	**200** 2900	**90** 796	**127** 1120	**12.8** 17.2	**72** 637	**98** 871
TE 0065	**65** 4.0	877	**45** 12	**57** 15	**140** 2030	**190** 2750	**200** 2900	**125** 1106	**176** 1558	**14.7** 19.8	**100** 885	**137** 1211
TE 0080	**82** 5.0	695	**45** 12	**57** 15	**140** 2030	**190** 2750	**200** 2900	**160** 1416	**220** 1947	**17.3** 23.2	**128** 1133	**171** 1515
TE 0100	**98** 6.0	582	**45** 12	**57** 15	**140** 2030	**190** 2750	**200** 2900	**190** 1682	**264** 2337	**17.4** 23.4	**152** 1345	**205** 1819
TE 0130	**130** 8.0	438	**45** 12	**57** 15	**140** 2030	**190** 2750	**200** 2900	**255** 2257	**352** 3116	**17.3** 23.2	**204** 1806	**274** 2423
TE 0165	**163** 10.0	348	**45** 12	**57** 15	**140** 2030	**190** 2750	**200** 2900	**310** 2744	**436** 3846	**17.0** 22.8	**248** 2195	**338** 2992
TE 0195	**195** 11.9	292	**45** 12	**57** 15	**140** 2030	**190** 2750	**200** 2900	**390** 3452	**528** 4673	**17.4** 23.4	**312** 2762	**411** 3637
TE 0230	**228** 13.9	328	**57** 15	**75** 20	**120** 1740	**165** 2400	**200** 2900	**380** 3363	**514** 4554	**17.7** 23.8	**304** 2691	**411** 3637
TE 0260	**260** 15.9	287	**57** 15	**75** 20	**110** 1595	**155** 2250	**200** 2900	**400** 3540	**550** 4870	**16.7** 22.4	**320** 2832	**449** 3977
TE 0295	**293** 17.9	256	**57** 15	**75** 20	**100** 1450	**145** 2100	**200** 2900	**428** 3784	**582** 5180	**15.7** 21.0	**328** 2903	**445** 3939
TE 0330	**328** 20.0	228	**57** 15	**75** 20	**100** 1450	**135** 1950	**200** 2900	**443** 3926	**600** 5312	**14.8** 19.8	**344** 3045	**453** 4014
TE 0365	**370** 22.6	203	**57** 15	**75** 20	**95** 1378	**125** 1825	**200** 2900	**467** 4133	**648** 5728	**13.6** 18.2	**373** 3301	**477** 4223
TE 0390	**392** 24.0	191	**57** 15	**75** 20	**85** 1233	**120** 1740	**200** 2900	**445** 3935	**628** 5562	**12.5** 16.8	**348** 3080	**462** 4090

Performance data based on testing using 10W40 oil with a viscosity of 43,1 cSt. (200 SUS) at 54° C (130° F.). Performance data is typical. Actual data may vary slightly from one production motor to another.

Les donnees sur les performances sont basees sur des tests utilisant de l'huile 10W40 d'une viscosite de 200 SUS a 54°C (130°F). Ces donnees correspondent a des situations typiques. Les donnees reelles peuvent varier legerement d'un moteur de production a l'autre.

Leistungsdaten sind gemessen mit SAE 10W40 bei einer Viskositaet von 43,1 Cst bei 54°C. Geringfuegige Abweichungen von den Katalogdaten sind moeglich.

Datos tecnicos obtenidos con aceite 10W40 de 200 SUS de viscosidad a 54°C (130°F). Los datos proporcionados son valores tipcos. Los valores exactos reales podrian tener una pequena variacion entre distintos motores.

* Intermittent operation rating applies to 10% of every minute.
Intermittierende Werte maximal 10% von jeder Betriebsminute.
Fonctionnement interm. 10% max. de chaque minute d`utilisation.
Capacidad de funcionamiento intermitente valida para 10% por cada minuto.

⚠ **WARNING**
This product can expose you to chemicals including lead and DEHP, which are known to the State of California to cause cancer, and birth defects or other reproductive harm. For more information go to www.p65warnings.ca.gov

Tel: +45 63 12 83 00 | Email: ps@hymatik.com | www.hymatik.com | Hvidkaervej 27a, DK-5250 Odense SV, Denmark

TE 0036

2.2 cu in / rev

Flow (GPM)	PRESSURE (PSID) 500	1000	1500	2000	2750
.5	111 **44**	225 **37**	346 **25**	470 **15**	
1	113 **96**	231 **86**	353 **77**	480 **67**	670 **40**
2	115 **202**	239 **190**	365 **179**	495 **169**	691 **140**
3	113 **307**	241 **296**	371 **282**	505 **269**	709 **240**
4	109 **411**	241 **397**	373 **384**	509 **371**	722 **340**
5	103 **516**	237 **501**	371 **486**	509 **470**	726 **440**
7	87 **724**	225 **709**	361 **691**	501 **674**	711 **641**
9	72 **933**	208 **916**	344 **897**	482 **877**	672 **841**
11	54 **1142**	190 **1117**	326 **1096**	462 **1075**	629 **1045**

TORQUE (LB IN) 711
SPEED (RPM) 641

TE 0045

2.5 cu in / rev

Flow (GPM)	PRESSURE (PSID) 500	1000	1500	2000	2750
.5	121 **41**	272 **35**	425 **28**	579 **22**	808 **10**
1	126 **86**	282 **79**	440 **72**	599 **65**	832 **50**
2	128 **176**	288 **168**	452 **161**	619 **152**	867 **134**
3	126 **266**	287 **257**	453 **249**	620 **239**	868 **221**
4	123 **356**	285 **346**	454 **337**	624 **326**	876 **306**
5	119 **446**	281 **435**	451 **425**	624 **413**	877 **391**
7	105 **625**	270 **613**	440 **601**	615 **587**	872 **562**
9	94 **805**	259 **791**	430 **777**	605 **761**	862 **733**
11	81 **983**	246 **967**	415 **950**	590 **930**	849 **896**

TORQUE (LB IN) 872
SPEED (RPM) 562

■ Cont. □ Int.

Intermittent operation rating applies to 10% of every minute.

Fonctionnement interm. 10% max. de chaque minute d'utilisation.

Performance data based on testing using 10W40 oil with a viscosity of 200 SUS at 54° C (130° F.). Performance data is typical. Actual data may vary slightly from one production motor to another.

Les donnees sur les performances sont basees sur des tests utilisant de l'huile 10W40 d'une viscosite de 200 SUS a 54°C (130°F). Ces donnees correspondent a des situations typiques. Les donnees reelles peuvent varier legerement d'un moteur de production a l'autre.

Intermittierende Werte maximal 10% von jeder Betriebsminute.

Capacidad de funcionamiento intermitente valida para 6 segundos por cada minuto.

Leistungsdaten sind gemessen mit SAE 10W40 bei einer Viskositaet von 43,1 Cst bei 54°C. Geringfuegige Abweichungen von den Katalogdaten sind moeglich.

Datos tecnicos obtenidos con aceite 10W40 de 200 SUS de viscosidad a 54°C (130°F). Los datos proporcionados son valores tipcos. Los valores exactos reales podrian tener una pequena variacion entre distintos motores.

⚠ **WARNING**
This product can expose you to chemicals including lead and DEHP, which are known to the State of California to cause cancer, and birth defects or other reproductive harm. For more information go to www.p65warnings.ca.gov

Tel: +45 63 12 83 00 | Email: ps@hymatik.com | www.hymatik.com | Hvidkaervej 27a, DK-5250 Odense SV, Denmark

TE 0050 — 3.0 cu in / rev

Flow (GPM)	PRESSURE (PSID) 500	1000	1500	2000	2750
.5	146 **32**	327 **23**	513 **13**	705 **6**	
1	159 **69**	345 **60**	537 **50**	727 **41**	1005 **17**
2	170 **145**	364 **136**	563 **124**	764 **113**	1057 **85**
3	167 **225**	363 **214**	565 **203**	768 **191**	1066 **163**
4	169 **294**	367 **282**	574 **271**	784 **260**	1092 **231**
5	165 **363**	365 **349**	574 **339**	785 **327**	1097 **297**
7	156 **501**	357 **485**	568 **474**	782 **460**	1096 **430**
9	141 **640**	342 **621**	555 **609**	771 **594**	1087 **561**
13	88 **904**	295 **881**	503 **869**	722 **851**	1036 **819**

TORQUE (LB IN) 1096
SPEED (RPM) 430

TE 0065 — 4.0 cu in / rev

Flow (GPM)	PRESSURE (PSID) 500	1000	1500	2000	2750
.5	220 **24**	481 **17**	743 **11**	1004 **3**	
1	232 **52**	498 **45**	763 **38**	1025 **31**	1411 **19**
2	239 **109**	512 **102**	789 **94**	1066 **85**	1469 **65**
3	238 **167**	512 **159**	790 **151**	1068 **141**	1474 **120**
4	237 **224**	514 **215**	795 **207**	1078 **197**	1492 **179**
5	233 **279**	511 **271**	794 **262**	1080 **252**	1502 **234**
7	216 **386**	497 **376**	783 **366**	1072 **356**	1497 **336**
9	195 **494**	477 **483**	764 **472**	1054 **460**	1481 **439**
12	152 **654**	435 **641**	724 **629**	1017 **617**	1445 **596**
15	102 **802**	388 **789**	676 **776**	969 **763**	1391 **740**

TORQUE (LB IN) 1497
SPEED (RPM) 336

■ Cont. □ Int.

Intermittent operation rating applies to 10% of every minute.

Fonctionnement interm. 10% max. de chaque minute d'utilisation.

Performance data based on testing using 10W40 oil with a viscosity of 200 SUS at 54° C (130° F.). Performance data is typical. Actual data may vary slightly from one production motor to another.

Les donnees sur les performances sont basees sur des tests utilisant de l'huile 10W40 d'une viscosite de 200 SUS a 54°C (130°F). Ces donnees correspondent a des situations typiques. Les donnees reelles peuvent varier legerement d'un moteur de production a l'autre.

Intermittierende Werte maximal 10% von jeder Betriebsminute.

Capacidad de funcionamiento intermitente valida para 6 segundos por cada minuto.

Leistungsdaten sind gemessen mit SAE 10W40 bei einer Viskositaet von 43,1 Cst bei 54°C. Geringfuegige Abweichungen von den Katalogdaten sind moeglich.

Datos tecnicos obtenidos con aceite 10W40 de 200 SUS de viscosidad a 54°C (130°F). Los datos proporcionados son valores tipcos. Los valores exactos reales podrian tener una pequena variacion entre distintos motores.

⚠ **WARNING**
This product can expose you to chemicals including lead and DEHP, which are known to the State of California to cause cancer, and birth defects or other reproductive harm. For more information go to www.p65warnings.ca.gov

Tel: +45 63 12 83 00 | Email: ps@hymatik.com | www.hymatik.com | Hvidkaervej 27a, DK-5250 Odense SV, Denmark

TE 0080 — 5.0 cu in / rev

PRESSURE (PSID)

Flow (GPM)	500	1000	1500	2000	2750
.5	261 **17**	575 **8**			
1	276 **39**	596 **30**	918 **23**	1245 **13**	
2	290 **85**	631 **76**	974 **68**	1310 **56**	1784 **35**
3	291 **131**	633 **122**	978 **113**	1319 **101**	1819 **79**
4	293 **177**	642 **167**	995 **158**	1347 **146**	1854 **121**
5	290 **223**	641 **213**	999 **203**	1359 **191**	1884 **165**
7	273 **316**	628 **304**	989 **293**	1353 **280**	1890 **253**
9	249 **408**	603 **396**	966 **384**	1334 **370**	1873 **340**
12	197 **546**	551 **533**	916 **519**	1287 **504**	1827 **472**
15	136 **686**	494 **670**	857 **655**	1226 **638**	1762 **603**

TORQUE (LB IN) 1890
SPEED (RPM) 253

TE 0100 — 6.0 cu in / rev

PRESSURE (PSID)

Flow (GPM)	500	1000	1500	2000	2750
.5	315 **14**	687 **7**			
1	332 **33**	710 **26**	1083 **18**	1460 **9**	
2	348 **71**	751 **64**	1152 **55**	1541 **45**	2089 **27**
3	350 **109**	756 **102**	1160 **92**	1556 **83**	2138 **62**
4	353 **147**	768 **140**	1185 **130**	1596 **120**	2189 **99**
5	349 **186**	771 **178**	1197 **168**	1622 **158**	2235 **137**
7	330 **263**	759 **254**	1191 **244**	1624 **232**	2258 **209**
9	302 **340**	731 **330**	1167 **319**	1606 **307**	2246 **284**
12	243 **456**	671 **444**	1111 **433**	1555 **420**	2198 **394**
15	176 **572**	606 **558**	1042 **546**	1484 **533**	2121 **505**

TORQUE (LB IN) 2258
SPEED (RPM) 209

■ Cont. □ Int.

Intermittent operation rating applies to 10% of every minute.

Fonctionnement interm. 10% max. de chaque minute d'utilisation.

Performance data based on testing using 10W40 oil with a viscosity of 200 SUS at 54° C (130° F.). Performance data is typical. Actual data may vary slightly from one production motor to another.

Les donnees sur les performances sont basees sur des tests utilisant de l'huile 10W40 d'une viscosite de 200 SUS a 54°C (130°F). Ces donnees correspondent a des situations typiques. Les donnees reelles peuvent varier legerement d'un moteur de production a l'autre.

Intermittierende Werte maximal 10% von jeder Betriebsminute.

Capacidad de funcionamiento intermitente valida para 6 segundos por cada minuto.

Leistungsdaten sind gemessen mit SAE 10W40 bei einer Viskositaet von 43,1 Cst bei 54°C. Geringfuegige Abweichungen von den Katalogdaten sind moeglich.

Datos tecnicos obtenidos con aceite 10W40 de 200 SUS de viscosidad a 54°C (130°F). Los datos proporcionados son valores tipcos. Los valores exactos reales podrian tener una pequena variacion entre distintos motores.

⚠ **WARNING**
This product can expose you to chemicals including lead and DEHP, which are known to the State of California to cause cancer, and birth defects or other reproductive harm. For more information go to www.p65warnings.ca.gov

Tel: +45 63 12 83 00 | Email: ps@hymatik.com | www.hymatik.com | Hvidkaervej 27a, DK-5250 Odense SV, Denmark

TE 0130 — 8.0 cu in / rev

Flow (GPM)	PRESSURE (PSID) 500	1000	1500	2000	2750
.5	445 **12**	962 **10**	1488 **7**	2018 **3**	
1	464 **27**	996 **24**	1525 **21**	2051 **17**	2835 **5**
2	482 **55**	1032 **53**	1584 **49**	2136 **44**	2940 **31**
3	483 **84**	1037 **81**	1594 **77**	2150 **72**	2961 **60**
4	483 **113**	1051 **110**	1619 **105**	2184 **100**	3015 **87**
5	478 **142**	1050 **138**	1625 **133**	2201 **128**	3050 **114**
7	450 **200**	1029 **195**	1613 **190**	2195 **183**	3054 **169**
9	414 **257**	993 **252**	1579 **247**	2166 **239**	3030 **224**
12	338 **344**	915 **338**	1503 **331**	2096 **323**	2961 **306**
15	252 **431**	827 **424**	1408 **416**	1996 **407**	2851 **389**

TORQUE (LB IN) 3054
SPEED (RPM) 169

TE 0165 — 10.0 cu in / rev

Flow (GPM)	PRESSURE (PSID) 500	1000	1500	2000	2750
.5	552 **9**	1175 **7**	1813 **4**	2457 **3**	
1	574 **21**	1213 **18**	1856 **16**	2499 **12**	3465 **7**
2	597 **44**	1263 **41**	1938 **38**	2614 **33**	3604 **25**
3	600 **67**	1273 **64**	1955 **60**	2634 **55**	3628 **46**
4	603 **90**	1299 **87**	1997 **83**	2691 **78**	3705 **67**
5	597 **113**	1302 **109**	2015 **105**	2727 **100**	3767 **89**
7	569 **159**	1286 **155**	2009 **150**	2732 **144**	3791 **133**
9	523 **205**	1244 **201**	1976 **195**	2707 **189**	3773 **177**
12	429 **274**	1152 **269**	1890 **263**	2630 **256**	3701 **242**
15	316 **344**	1039 **338**	1769 **331**	2500 **323**	3568 **308**

TORQUE (LB IN) 3791
SPEED (RPM) 133

☐ Cont. ☐ Int.

Intermittent operation rating applies to 10% of every minute.

Fonctionnement interm. 10% max. de chaque minute d'utilisation.

Performance data based on testing using 10W40 oil with a viscosity of 200 SUS at 54° C (130° F.). Performance data is typical. Actual data may vary slightly from one production motor to another.

Les donnees sur les performances sont basees sur des tests utilisant de l'huile 10W40 d'une viscosite de 200 SUS a 54°C (130°F). Ces donnees correspondent a des situations typiques. Les donnees reelles peuvent varier legerement d'un moteur de production a l'autre.

Intermittierende Werte maximal 10% von jeder Betriebsminute.

Capacidad de funcionamiento intermitente valida para 6 segundos por cada minuto.

Leistungsdaten sind gemessen mit SAE 10W40 bei einer Viskositaet von 43,1 Cst bei 54°C. Geringfuegige Abweichungen von den Katalogdaten sind moeglich.

Datos tecnicos obtenidos con aceite 10W40 de 200 SUS de viscosidad a 54°C (130°F). Los datos proporcionados son valores tipcos. Los valores exactos reales podrian tener una pequena variacion entre distintos motores.

⚠ **WARNING**
This product can expose you to chemicals including lead and DEHP, which are known to the State of California to cause cancer, and birth defects or other reproductive harm. For more information go to www.p65warnings.ca.gov

Tel: +45 63 12 83 00 | Email: ps@hymatik.com | www.hymatik.com | Hvidkaervej 27a, DK-5250 Odense SV, Denmark

TE 0195

11.9 cu in / rev

	PRESSURE (PSID) 500	1000	1500	2000	2750
.5	710 **8**	1519 **7**	2344 **5**	3182 **3**	
1	736 **18**	1558 **16**	2387 **14**	3221 **12**	4457 **6**
2	758 **37**	1596 **35**	2445 **33**	3302 **30**	4558 **22**
3	758 **56**	1604 **54**	2459 **51**	3315 **48**	4576 **39**
4	757 **75**	1618 **73**	2482 **70**	3346 **67**	4619 **56**
5	747 **95**	1615 **92**	2488 **89**	3360 **85**	4643 **74**
7	705 **133**	1586 **130**	2467 **127**	3343 **122**	4631 **111**
9	646 **172**	1528 **169**	2415 **165**	3300 **160**	4590 **147**
12	530 **230**	1408 **226**	2303 **221**	3197 **215**	4494 **201**
15	394 **288**	1273 **283**	2147 **278**	3027 **272**	4308 **256**

Flow (GPM)

TORQUE (LB IN) 4631
SPEED (RPM) 111

TE 0230

13.9 cu in / rev

	PRESSURE (PSID) 500	1000	1500	1750	2000	2400
.5	761 **7**	1673 **6**	2614 **5**	3094 **4**	3584 **3**	4331 **3**
1	791 **15**	1712 **14**	2650 **13**	3128 **12**	3615 **11**	4366 **9**
2	819 **32**	1764 **30**	2726 **29**	3208 **28**	3692 **26**	4448 **24**
3	819 **48**	1771 **47**	2737 **45**	3226 **44**	3718 **42**	4482 **41**
4	821 **65**	1787 **63**	2765 **61**	3256 **60**	3750 **58**	4520 **56**
5	808 **81**	1786 **79**	2777 **77**	3277 **76**	3778 **74**	4554 **73**
7	770 **114**	1756 **112**	2755 **109**	3255 **108**	3760 **106**	4535 **104**
9	705 **147**	1699 **145**	2710 **142**	3216 **140**	3724 **138**	4496 **137**
12	581 **197**	1582 **194**	2595 **191**	3103 **189**	3617 **186**	4382 **183**
15	400 **247**	1409 **243**	2437 **239**	2949 **237**	3466 **235**	4216 **230**
20	64 **329**	1052 **325**	2067 **321**	2580 **319**	3100 **316**	3814 **311**

Flow (GPM)

TORQUE (LB IN) 1894
SPEED (RPM) 198

■ Cont. □ Int.

Intermittent operation rating applies to 10% of every minute.

Fonctionnement interm. 10% max. de chaque minute d'utilisation.

Performance data based on testing using 10W40 oil with a viscosity of 200 SUS at 54° C (130° F.). Performance data is typical. Actual data may vary slightly from one production motor to another.

Les donnees sur les performances sont basees sur des tests utilisant de l'huile 10W40 d'une viscosite de 200 SUS a 54°C (130°F). Ces donnees correspondent a des situations typiques. Les donnees reelles peuvent varier legerement d'un moteur de production a l'autre.

Intermittierende Werte maximal 10% von jeder Betriebsminute.

Capacidad de funcionamiento intermitente valida para 6 segundos por cada minuto.

Leistungsdaten sind gemessen mit SAE 10W40 bei einer Viskositaet von 43,1 Cst bei 54°C. Geringfuegige Abweichungen von den Katalogdaten sind moeglich.

Datos tecnicos obtenidos con aceite 10W40 de 200 SUS de viscosidad a 54°C (130°F). Los datos proporcionados son valores tipcos. Los valores exactos reales podrian tener una pequena variacion entre distintos motores.

⚠ **WARNING**
This product can expose you to chemicals including lead and DEHP, which are known to the State of California to cause cancer, and birth defects or other reproductive harm. For more information go to www.p65warnings.ca.gov

Tel: +45 63 12 83 00 | Email: ps@hymatik.com | www.hymatik.com | Hvidkaervej 27a, DK-5250 Odense SV, Denmark

TE 0260

15.9 cu in / rev PRESSURE (PSID)

Flow (GPM)	500	1000	1500	1650	2250
.5	908 **7**	1961 **6**	3048 **6**	3380 **6**	4631 **5**
1	938 **14**	2006 **13**	3099 **13**	3433 **12**	4692 **11**
2	971 **28**	2059 **27**	3165 **26**	3501 **26**	4779 **23**
3	968 **43**	2065 **42**	3177 **40**	3514 **39**	4797 **38**
4	970 **57**	2081 **56**	3203 **54**	3541 **53**	4837 **50**
5	957 **71**	2084 **70**	3219 **68**	3561 **67**	4870 **64**
7	907 **100**	2049 **98**	3198 **96**	3542 **95**	4856 **91**
9	837 **129**	1985 **127**	3143 **124**	3489 **123**	4799 **117**
12	692 **172**	1844 **169**	3016 **166**	3367 **164**	4671 **157**
15	489 **215**	1647 **212**	2830 **208**	3188 **206**	4494 **200**
20	129 **287**	1255 **283**	2418 **279**	2773 **277**	4031 **270**

TORQUE (LB IN) 4856
SPEED (RPM) 91

Flow (GPM)

TE 0295

17.9 cu in / rev PRESSURE (PSID)

Flow (GPM)	500	1000	1500	1550	2100
.5	1014 **6**	2216 **5**	3453 **4**	3576 **4**	4900 **3**
1	1051 **12**	2270 **11**	3509 **10**	3633 **10**	4963 **8**
2	1088 **25**	2334 **24**	3600 **22**	3727 **22**	5092 **21**
3	1085 **38**	2338 **36**	3611 **35**	3739 **34**	5110 **33**
4	1085 **50**	2353 **49**	3639 **47**	3769 **47**	5152 **44**
5	1072 **63**	2352 **62**	3654 **60**	3784 **59**	5180 **57**
7	1019 **89**	2311 **87**	3624 **85**	3755 **84**	5159 **80**
9	939 **115**	2237 **113**	3561 **110**	3693 **110**	5098 **104**
12	776 **153**	2074 **151**	3403 **148**	3537 **147**	4931 **142**
15	545 **192**	1853 **189**	3184 **186**	3319 **185**	4689 **180**
20	126 **256**	1408 **253**	2697 **249**	2826 **249**	4099 **243**

TORQUE (LB IN) 5159
SPEED (RPM) 80

Flow (GPM)

■ Cont. □ Int.

Intermittent operation rating applies to 10% of every minute.

Fonctionnement interm. 10% max. de chaque minute d`utilisation.

Performance data based on testing using 10W40 oil with a viscosity of 200 SUS at 54° C (130° F.). Performance data is typical. Actual data may vary slightly from one production motor to another.

Les donnees sur les performances sont basees sur des tests utilisant de l'huile 10W40 d'une viscosite de 200 SUS a 54°C (130°F). Ces donnees correspondent a des situations typiques. Les donnees reelles peuvent varier legerement d'un moteur de production a l'autre.

Intermittierende Werte maximal 10% von jeder Betriebsminute.

Capacidad de funcionamiento intermitente valida para 6 segundos por cada minuto.

Leistungsdaten sind gemessen mit SAE 10W40 bei einer Viskositaet von 43,1 Cst bei 54°C. Geringfuegige Abweichungen von den Katalogdaten sind moeglich.

Datos tecnicos obtenidos con aceite 10W40 de 200 SUS de viscosidad a 54°C (130°F). Los datos proporcionados son valores tipcos. Los valores exactos reales podrian tener una pequena variacion entre distintos motores.

⚠ **WARNING**
This product can expose you to chemicals including lead and DEHP, which are known to the State of California to cause cancer, and birth defects or other reproductive harm. For more information go to www.p65warnings.ca.gov

Tel: +45 63 12 83 00 | Email: ps@hymatik.com | www.hymatik.com | Hvidkaervej 27a, DK-5250 Odense SV, Denmark

TE 0330

20.0 cu in / rev

Flow (GPM)	PRESSURE (PSID) 500	1000	1500	1950
.5	1184 **5**	2507 **5**	3722 **4**	5040 **3**
1	1218 **11**	2558 **10**	3772 **9**	5093 **8**
2	1258 **22**	2632 **21**	3867 **20**	5224 **19**
3	1251 **34**	2633 **32**	3879 **31**	5242 **30**
4	1249 **45**	2649 **44**	3909 **42**	5287 **40**
5	1229 **57**	2648 **55**	3926 **53**	5312 **50**
7	1162 **80**	2600 **78**	3898 **75**	5296 **71**
9	1064 **103**	2518 **100**	3829 **98**	5219 **93**
12	875 **137**	2333 **135**	3657 **131**	5026 **127**
15	621 **171**	2081 **169**	3420 **165**	4770 **160**
20	163 **229**	1576 **226**	2875 **222**	4129 **214**

TORQUE (LB IN) 5219
SPEED (RPM) 93

TE 0365

22.6 cu in / rev

Flow (GPM)	PRESSURE (PSID) 500	1000	1325	1825
.5	1393 **5**	2942 **4**	3974 **4**	5539 **3**
1	1444 **10**	3005 **9**	4036 **8**	5599 **7**
2	1494 **20**	3090 **19**	4131 **18**	5714 **17**
3	1485 **30**	3082 **29**	4125 **28**	5709 **27**
4	1477 **40**	3089 **39**	4139 **37**	5728 **36**
5	1452 **50**	3075 **49**	4130 **47**	5719 **45**
7	1371 **70**	3009 **69**	4071 **67**	5654 **63**
9	1260 **90**	2899 **89**	3669 **87**	5543 **84**
12	1002 **121**	2658 **119**	3737 **117**	5283 **113**
15	700 **151**	2355 **149**	3432 **146**	4937 **142**
20	152 **201**	1776 **199**	2838 **196**	4228 **191**

TORQUE (LB IN) 5543
SPEED (RPM) 84

■ Cont. □ Int.

Intermittent operation rating applies to 10% of every minute.

Fonctionnement interm. 10% max. de chaque minute d`utilisation.

Performance data based on testing using 10W40 oil with a viscosity of 200 SUS at 54° C (130° F.). Performance data is typical. Actual data may vary slightly from one production motor to another.

Les donnees sur les performances sont basees sur des tests utilisant de l'huile 10W40 d'une viscosite de 200 SUS a 54°C (130°F). Ces donnees correspondent a des situations typiques. Les donnees reelles peuvent varier legerement d'un moteur de production a l'autre.

Intermittierende Werte maximal 10% von jeder Betriebsminute.

Capacidad de funcionamiento intermitente valida para 6 segundos por cada minuto.

Leistungsdaten sind gemessen mit SAE 10W40 bei einer Viskositaet von 43,1 Cst bei 54°C. Geringfuegige Abweichungen von den Katalogdaten sind moeglich.

Datos tecnicos obtenidos con aceite 10W40 de 200 SUS de viscosidad a 54°C (130°F). Los datos proporcionados son valores tipcos. Los valores exactos reales podrian tener una pequena variacion entre distintos motores.

⚠ **WARNING**
This product can expose you to chemicals including lead and DEHP, which are known to the State of California to cause cancer, and birth defects or other reproductive harm. For more information go to www.p65warnings.ca.gov

Tel: +45 63 12 83 00 | Email: ps@hymatik.com | www.hymatik.com | Hvidkaervej 27a, DK-5250 Odense SV, Denmark

TE 0390 — 24.0 cu in / rev

PRESSURE (PSID)

Flow (GPM)	500	1000	1250	1750
.5	1326 **4**	2889 **3**	3682 **2**	5244 **2**
1	1380 **9**	2934 **7**	3724 **7**	5283 **6**
2	1443 **18**	3034 **17**	3840 **15**	5427 **13**
3	1442 **28**	3049 **26**	3861 **25**	5458 **22**
4	1454 **37**	3084 **36**	3905 **34**	5518 **32**
5	1447 **47**	3104 **45**	3935 **44**	5562 **40**
7	1393 **66**	3080 **64**	3923 **62**	5559 **60**
9	1297 **85**	3013 **83**	3868 **81**	5507 **79**
12	1088 **114**	2818 **112**	3686 **110**	5308 **106**
15	797 **143**	2539 **140**	3414 **138**	5002 **135**
20	264 **191**	2006 **188**	2880 **186**	4374 **182**

TORQUE (LB IN) 5559
SPEED (RPM) 60

■ Cont. □ Int.

Intermittent operation rating applies to 10% of every minute.

Fonctionnement interm. 10% max. de chaque minute d'utilisation.

Performance data based on testing using 10W40 oil with a viscosity of 200 SUS at 54° C (130° F.). Performance data is typical. Actual data may vary slightly from one production motor to another.

Les donnees sur les performances sont basees sur des tests utilisant de l'huile 10W40 d'une viscosite de 200 SUS a 54°C (130°F). Ces donnees correspondent a des situations typiques. Les donnees reelles peuvent varier legerement d'un moteur de production a l'autre.

Intermittierende Werte maximal 10% von jeder Betriebsminute.

Capacidad de funcionamiento intermitente valida para 6 segundos por cada minuto.

Leistungsdaten sind gemessen mit SAE 10W40 bei einer Viskositaet von 43,1 Cst bei 54°C. Geringfuegige Abweichungen von den Katalogdaten sind moeglich.

Datos tecnicos obtenidos con aceite 10W40 de 200 SUS de viscosidad a 54°C (130°F). Los datos proporcionados son valores tipcos. Los valores exactos reales podrian tener una pequena variacion entre distintos motores.

WARNING
This product can expose you to chemicals including lead and DEHP, which are known to the State of California to cause cancer, and birth defects or other reproductive harm. For more information go to www.p65warnings.ca.gov

Tel: +45 63 12 83 00 | Email: ps@hymatik.com | www.hymatik.com | Hvidkaervej 27a, DK-5250 Odense SV, Denmark

Flange Mount / Standardgehaeuse
Monture à bride(s) / Montaje de brida

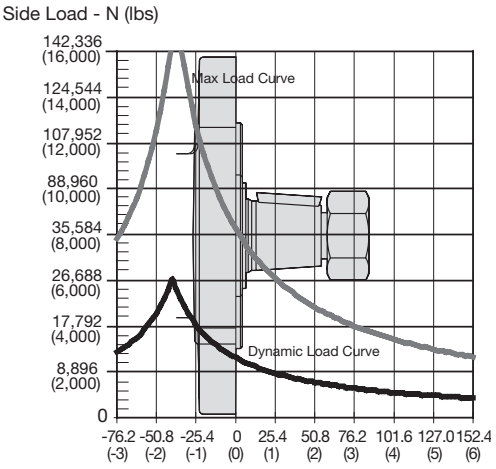

The dynamic side load curve is based on uni-directional steady state loads for L_{10} bearing life at 3 x 10^6 revolutions.
Die zulässige auslegbare radiale Wellenbelastungskurve ist unter ruhenden, einseitig statisch gerichteten Lastverhältnissen auf eine L_{10} Lebensdauer mit 3 x 10^6 Umdrehungen kalkuliert.
La courbe de charge latérale permise se base sur des charges unidirectionnelles en régime permanent pour le roulement L_{10} à 3 x 10^6 révolutions.
La curva de valores admisibles de carga lateral está basada en cargas constantes para cojinetes L_{10} a 3 x 10^6 revoluciones.

Wheel Mount / Radnabengehaeuse
Monture à roue / Montaje de rueda

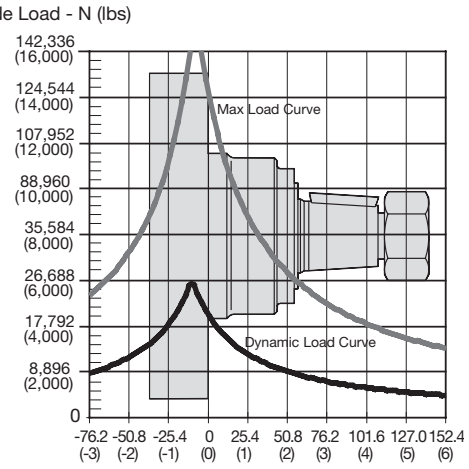

The maximum load curve is defined by bearing static load capacity. This curve should not be exceeded at any time including shock loads.
Die maximale radiale Wellenbelastungskurve ist definiert als maximale statische Last ohne Drehzahl. Sie gilt als Grenze und sollte keinesfalls überschritten werden.
La courbe de charge maximale est définie par la capacité de charge statique portante. Cette courbe ne devrait être dépassée en aucun moment y compris pour les charges par à-coups.
La curva de carga máxima queda definida por la capacidad de carga estática del cojinete. No se deben superar los valores de esta curva, ni siquiera con cargas provisorias de impacto.

Equation to Calculate the Expected Radial Bearing Life
Gelichung zur Ermittlung der Lagerlebensdauer

Equation to calculate the dynamic bearing life for a given load:
Bestimmung der erlaubten radialen Wellenbelastung mit vorgegebener Last

Use F_a, F_b and S in equation to determine hours of L_{10} bearing life.
Die Lebensdauer in Stunden ergibt sich durch einsetzen von F_a, F_b, und S in die nachstehende Formel.

$$L = \frac{3.0 \times 10^6}{60 \times S} \left\{ \frac{F_a}{F_b} \right\}^{3.33}$$

Where / Mit:

S = Shaft Speed RPM / Abtriebswellendrehzahl in min^{-1}
L = Life In Hours / Lebensdauer in Stunden
F_a = Allowable side load defined by above curve at a distance from mounting flange. / Erlaubte radiale Wellenbelastung als Function der Laenge
F_b = Application side load. / Anwendungsseitige Wellenbelastung

Note: Calculations are based on L_{10} bearing life per ISO 281.
Auslegung basiert auf einer L_{10} Lenbendauer nach ISO 281

WARNING
This product can expose you to chemicals including lead and DEHP, which are known to the State of California to cause cancer, and birth defects or other reproductive harm. For more information go to www.p65warnings.ca.gov

Tel: +45 63 12 83 00 | Email: ps@hymatik.com | www.hymatik.com | Hvidkaervej 27a, DK-5250 Odense SV, Denmark

Code: AM
SAE A 2-Bolt, Manifold

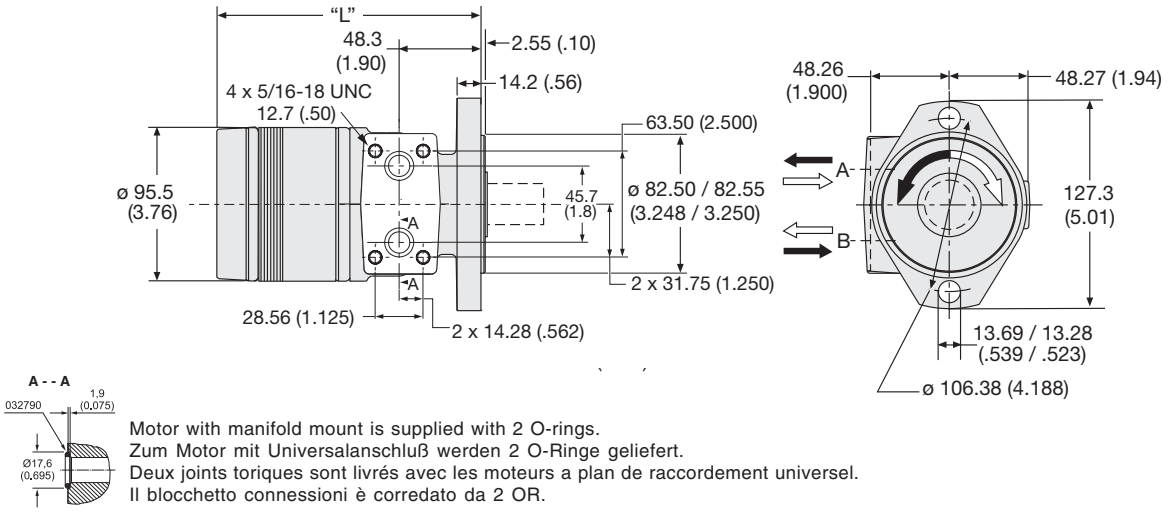

Motor with manifold mount is supplied with 2 O-rings.
Zum Motor mit Universalanschluß werden 2 O-Ringe geliefert.
Deux joints toriques sont livrés avec les moteurs a plan de raccordement universel.
Il blocchetto connessioni è corredato da 2 OR.

Code AM disp.	0036	0045	0050	0065	0080	0100	0130	0165	0195	0230	0260	0295	0330	0365	0390
Weight/Gewicht kg	**5.87**	**6.03**	**6.12**	**6.26**	**6.35**	**6.49**	**6.76**	**7.03**	**7.35**	**7.58**	**7.80**	**8.07**	**8.35**	**8.66**	**8.80**
Poids/Peso (lb)	(12.9)	(13.3)	(13.5)	(13.8)	(14.0)	(14.3)	(14.9)	(15.5)	(16.2)	(16.7)	(17.2)	(17.8)	(18.4)	(19.1)	(19.4)
Length"L" mm	**132.6**	**136.1**	**137.7**	**140.7**	**144.0**	**147.1**	**153.4**	**159.8**	**166.1**	**172.5**	**178.8**	**185.1**	**191.5**	**200.2**	**202.2**
"L" (in)	(5.22)	(5.36)	(5.42)	(5.54)	(5.67)	(5.79)	(6.04)	(6.29)	(6.54)	(6.79)	(7.04)	(7.29)	(7.54)	(7.88)	(8.04)

Code: AP
SAE A 2-Bolt, 1/2-14 NPTF Pipe

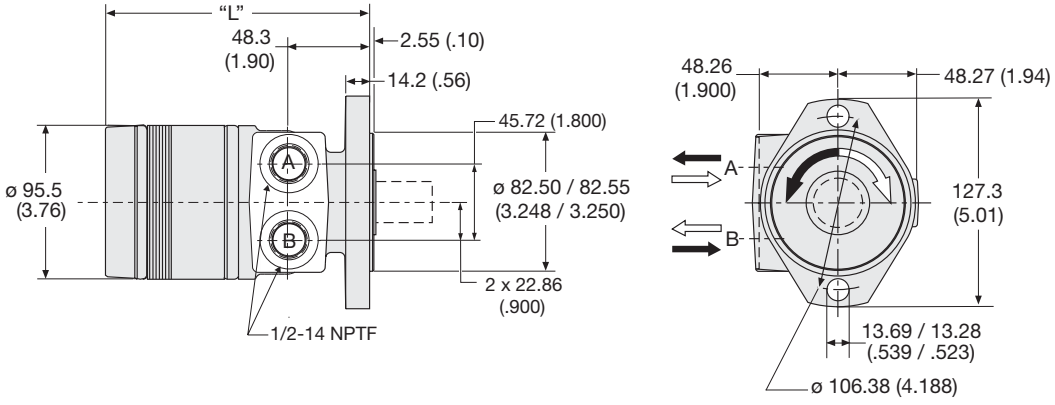

Code AP disp.	0036	0045	0050	0065	0080	0100	0130	0165	0195	0230	0260	0295	0330	0365	0390
Weight/Gewicht kg	**5.87**	**6.03**	**6.12**	**6.26**	**6.35**	**6.49**	**6.76**	**7.03**	**7.35**	**7.58**	**7.80**	**8.07**	**8.35**	**8.66**	**8.80**
Poids/Peso (lb)	(12.9)	(13.3)	(13.5)	(13.8)	(14.0)	(14.3)	(14.9)	(15.5)	(16.2)	(16.7)	(17.2)	(17.8)	(18.4)	(19.1)	(19.4)
Length"L" mm	**132.6**	**136.1**	**137.7**	**140.7**	**144.0**	**147.1**	**153.4**	**159.8**	**166.1**	**172.5**	**178.8**	**185.1**	**191.5**	**200.2**	**202.2**
"L" (in)	(5.22)	(5.36)	(5.42)	(5.54)	(5.67)	(5.79)	(6.04)	(6.29)	(6.54)	(6.79)	(7.04)	(7.29)	(7.54)	(7.88)	(8.04)

English equivalents for metric specifications are shown in ( ).

WARNING
This product can expose you to chemicals including lead and DEHP, which are known to the State of California to cause cancer, and birth defects or other reproductive harm. For more information go to www.p65warnings.ca.gov

Tel: +45 63 12 83 00 | Email: ps@hymatik.com | www.hymatik.com | Hvidkaervej 27a, DK-5250 Odense SV, Denmark

Code: AS
SAE A 2-Bolt, 7/8-14 SAE O-Ring

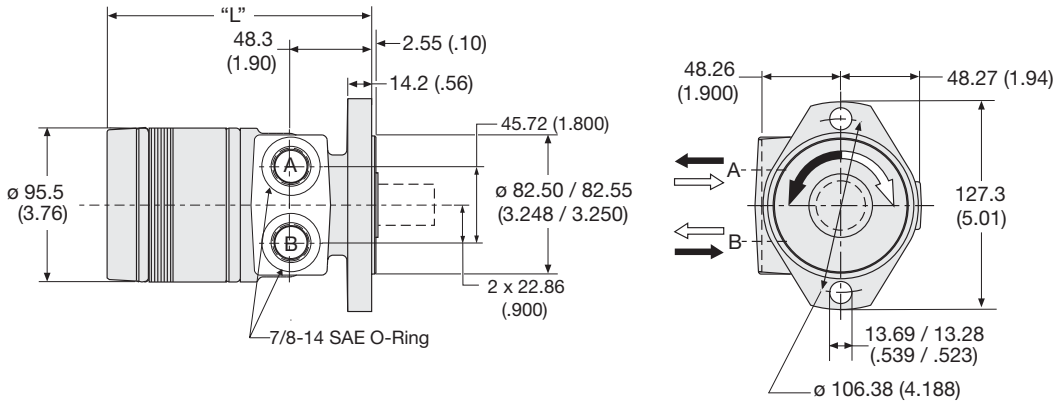

Code AS disp.	0036	0045	0050	0065	0080	0100	0130	0165	0195	0230	0260	0295	0330	0365	0390
Weight/Gewicht kg	**5.87**	**6.03**	**6.12**	**6.26**	**6.35**	**6.49**	**6.76**	**7.03**	**7.35**	**7.58**	**7.80**	**8.07**	**8.35**	**8.66**	**8.80**
Poids/Peso (lb)	(12.9)	(13.3)	(13.5)	(13.8)	(14.0)	(14.3)	(14.9)	(15.5)	(16.2)	(16.7)	(17.2)	(17.8)	(18.4)	(19.1)	(19.4)
Length"L" mm	**132.6**	**136.1**	**137.7**	**140.7**	**144.0**	**147.1**	**153.4**	**159.8**	**166.1**	**172.5**	**178.8**	**185.1**	**191.5**	**200.2**	**202.2**
"L" (in)	(5.22)	(5.36)	(5.42)	(5.54)	(5.67)	(5.79)	(6.04)	(6.29)	(6.54)	(6.79)	(7.04)	(7.29)	(7.54)	(7.88)	(8.04)

Code: BS
SAE B 2-Bolt
7/8-14 SAE

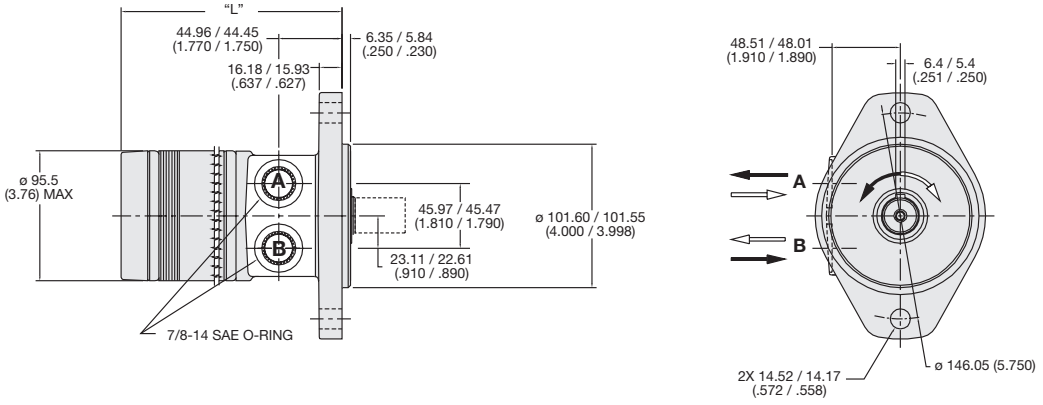

Code BS disp.	0036	0045	0050	0065	0080	0100	0130	0165	0195	0230	0260	0295	0330	0365	0390
Weight/Gewicht kg	**7.27**	**7.34**	**7.48**	**7.62**	**7.71**	**7.84**	**8.11**	**8.39**	**8.70**	**8.93**	**9.16**	**9.43**	**9.70**	**9.97**	**10.1**
Poids/Peso (lb)	(15.9)	(16.3)	(16.5)	(16.8)	(17.0)	(17.3)	(17.9)	(18.5)	(19.2)	(19.7)	(20.2)	(20.8)	(21.4)	(22.0)	(22.4)
Length"L" mm	**131.5**	**132.5**	**134.1**	**137.1**	**140.4**	**143.5**	**149.8**	**156.2**	**162.5**	**168.9**	**175.2**	**181.6**	**187.9**	**196.5**	**200.9**
"L" (in)	(5.18)	(5.22)	(5.28)	(5.40)	(5.53)	(5.65)	(5.90)	(6.15)	(6.40)	(6.65)	(6.90)	(7.15)	(7.40)	(7.74)	(7.91)

English equivalents for metric specifications are shown in ( ).

WARNING
This product can expose you to chemicals including lead and DEHP, which are known to the State of California to cause cancer, and birth defects or other reproductive harm. For more information go to www.p65warnings.ca.gov

Tel: +45 63 12 83 00 | Email: ps@hymatik.com | www.hymatik.com | Hvidkaervej 27a, DK-5250 Odense SV, Denmark

Code: FP
Four Bolt, 1/2-14 NPTF Pipe

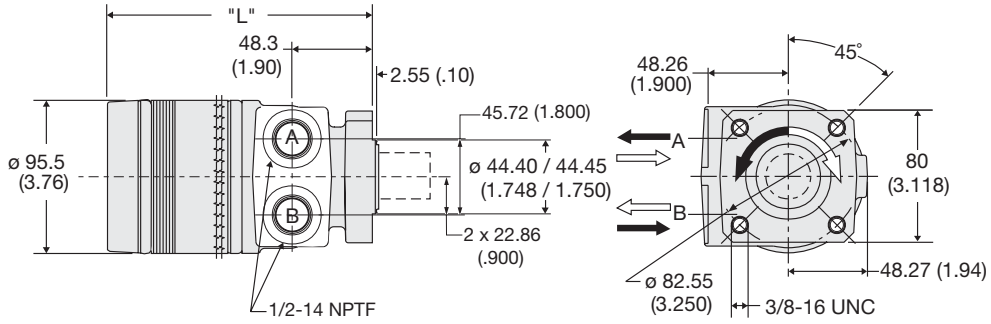

Code FP disp.	0036	0045	0050	0065	0080	0100	0130	0165	0195	0230	0260	0295	0330	0365	0390
Weight/Gewicht kg	**5.58**	**5.62**	**5.67**	**5.80**	**5.94**	**6.08**	**6.31**	**6.62**	**7.03**	**7.17**	**7.39**	**7.62**	**7.94**	**8.26**	**8.39**
Poids/Peso (lb)	(12.3)	(12.4)	(12.5)	(12.8)	(13.1)	(13.4)	(13.9)	(14.6)	(15.5)	(15.8)	(16.3)	(16.8)	(17.5)	(18.2)	(18.5)
Length"L" mm	**132.6**	**136.1**	**137.7**	**140.7**	**144.0**	**147.1**	**153.4**	**159.8**	**166.1**	**172.5**	**178.8**	**185.1**	**191.5**	**200.2**	**202.2**
"L" (in)	(5.22)	(5.36)	(5.42)	(5.54)	(5.67)	(5.79)	(6.04)	(6.29)	(6.54)	(6.79)	(7.04)	(7.29)	(7.54)	(7.88)	(8.04)

Code: FS
Four Bolt, 7/8-14 SAE O-Ring

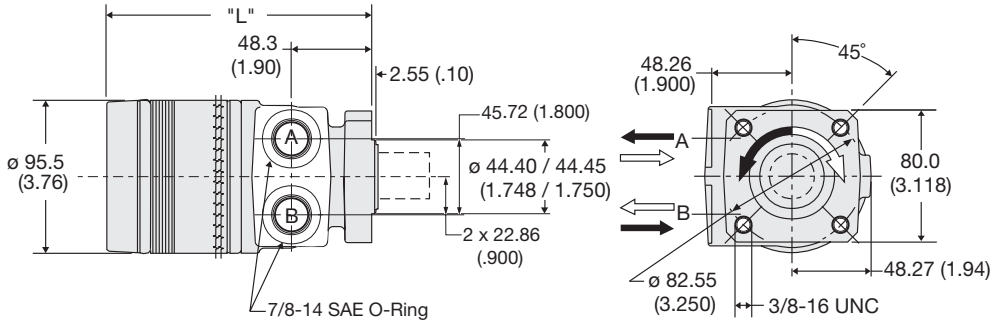

Code FS disp.	0036	0045	0050	0065	0080	0100	0130	0165	0195	0230	0260	0295	0330	0365	0390
Weight/Gewicht kg	**5.58**	**5.62**	**5.67**	**5.80**	**5.94**	**6.08**	**6.31**	**6.62**	**7.03**	**7.17**	**7.39**	**7.62**	**7.94**	**8.26**	**8.39**
Poids/Peso (lb)	(12.3)	(12.4)	(12.5)	(12.8)	(13.1)	(13.4)	(13.9)	(14.6)	(15.5)	(15.8)	(16.3)	(16.8)	(17.5)	(18.2)	(18.5)
Length"L" mm	**132.6**	**136.1**	**137.7**	**140.7**	**144.0**	**147.1**	**153.4**	**159.8**	**166.1**	**172.5**	**178.8**	**185.1**	**191.5**	**200.2**	**202.2**
"L" (in)	(5.22)	(5.36)	(5.42)	(5.54)	(5.67)	(5.79)	(6.04)	(6.29)	(6.54)	(6.79)	(7.04)	(7.29)	(7.54)	(7.88)	(8.04)

English equivalents for metric specifications are shown in ( ).

WARNING
This product can expose you to chemicals including lead and DEHP, which are known to the State of California to cause cancer, and birth defects or other reproductive harm. For more information go to www.p65warnings.ca.gov

Tel: +45 63 12 83 00 | Email: ps@hymatik.com | www.hymatik.com | Hvidkaervej 27a, DK-5250 Odense SV, Denmark

Code: CS
SAE "A" 2-Bolt Long Pilot, 7/8-14 SAE O-Ring

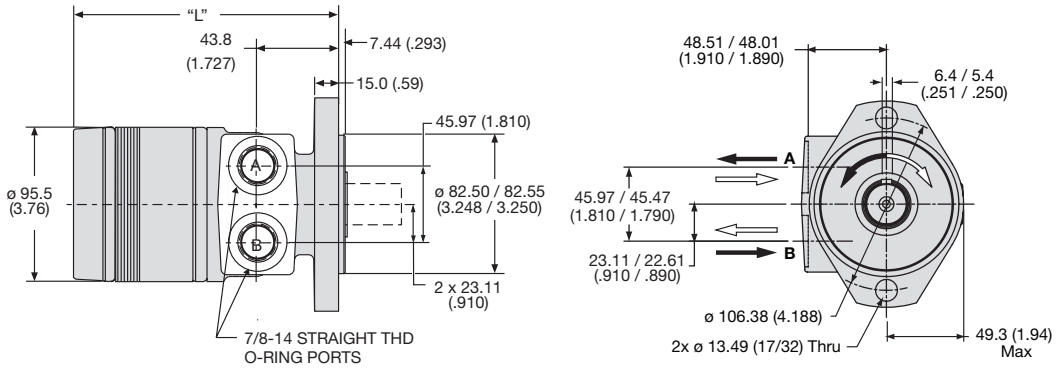

Code CS disp.	0036	0045	0050	0065	0080	0100	0130	0165	0195	0230	0260	0295	0330	0365	0390
Weight/Gewichtkg	**5.87**	**6.03**	**6.12**	**6.26**	**6.35**	**6.49**	**6.76**	**7.03**	**7.35**	**7.58**	**7.80**	**8.07**	**8.35**	**8.66**	**8.80**
Poids/Peso (lb)	(12.9)	(13.3)	(13.5)	(13.8)	(14.0)	(14.3)	(14.9)	(15.5)	(16.2)	(16.7)	(17.2)	(17.8)	(18.4)	(19.1)	(19.4)
Length "L" mm	**130.4**	**131.5**	**132.9**	**136.1**	**139.3**	**142.5**	**148.8**	**155.2**	**161.5**	**167.9**	**174.2**	**180.6**	**186.9**	**195.6**	**199.7**
"L" (in)	(5.13)	(5.18)	(5.23)	(5.36)	(5.48)	(5.61)	(5.86)	(6.11)	(6.36)	(6.61)	(6.86)	(7.11)	(7.36)	(7.70)	(7.86)

Code: MS
Magneto, 7/8-14 SAE O-Ring

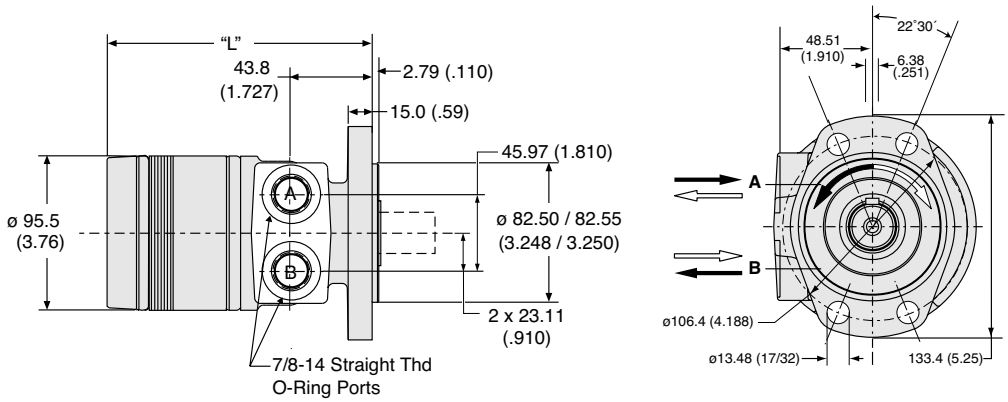

Code MS disp.	0036	0045	0050	0065	0080	0100	0130	0165	0195	0230	0260	0295	0330	0365	0390
Weight/Gewicht kg	**6.16**	**6.30**	**6.40**	**6.53**	**6.62**	**6.76**	**7.03**	**7.30**	**7.62**	**7.85**	**8.12**	**8.35**	**8.62**	**8.94**	**9.07**
Poids/Peso (lb)	(13.6)	(13.9)	(14.1)	(14.4)	(14.6)	(14.9)	(15.5)	(16.1)	(16.8)	(17.3)	(17.9)	(18.4)	(19.0)	(19.7)	(20.0)
Length "L" mm	**135.1**	**136.1**	**137.6**	**140.8**	**144.0**	**147.1**	**153.5**	**159.8**	**166.2**	**172.5**	**178.9**	**185.2**	**191.6**	**200.2**	**204.3**
"L" (in)	(5.32)	(5.36)	(5.42)	(5.54)	(5.67)	(5.79)	(6.04)	(6.29)	(6.54)	(6.79)	(7.04)	(7.29)	(7.54)	(7.88)	(8.04)

English equivalents for metric specifications are shown in ( ).

WARNING
This product can expose you to chemicals including lead and DEHP, which are known to the State of California to cause cancer, and birth defects or other reproductive harm. For more information go to www.p65warnings.ca.gov

Tel: +45 63 12 83 00 | Email: ps@hymatik.com | www.hymatik.com | Hvidkaervej 27a, DK-5250 Odense SV, Denmark

Code: NS
Midmount, 7/8-14 SAE O-Ring

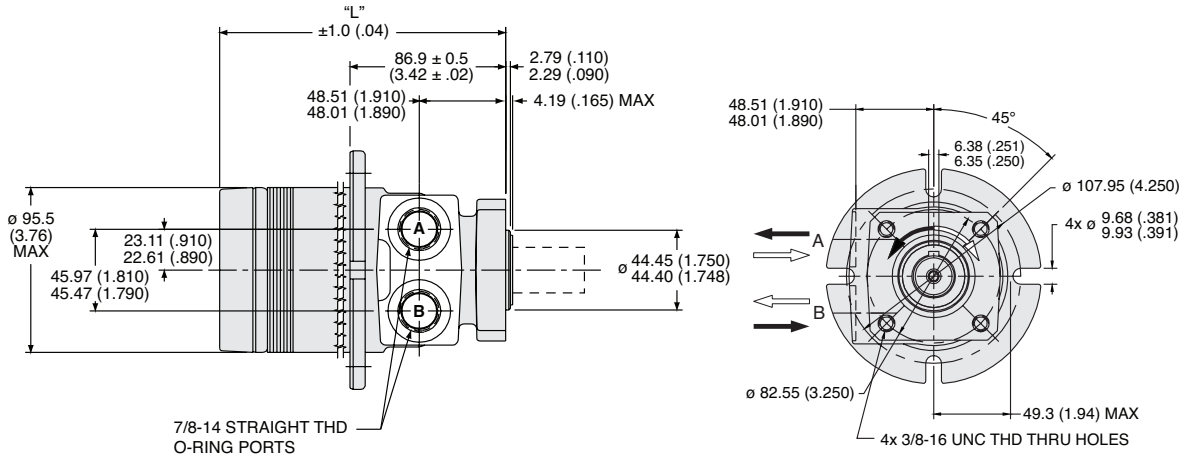

Code NS disp.	0036	0045	0050	0065	0080	0100	0130	0165	0195	0230	0260	0295	0330	0365	0390
Weight/Gewicht kg	**5.58**	**5.62**	**5.67**	**5.80**	**5.94**	**6.08**	**6.31**	**6.62**	**7.03**	**7.17**	**7.39**	**7.62**	**7.94**	**8.26**	**8.39**
Poids/Peso (lb)	(12.3)	(12.4)	(12.5)	(12.8)	(13.1)	(13.4)	(13.9)	(14.6)	(15.5)	(15.8)	(16.3)	(16.8)	(17.5)	(18.2)	(18.5)
Length "L" mm	**132.6**	**136.1**	**137.6**	**140.8**	**144.0**	**147.1**	**153.5**	**159.8**	**166.2**	**172.5**	**178.9**	**185.2**	**191.6**	**200.2**	**204.3**
"L" (in)	(5.22)	(5.36)	(5.42)	(5.54)	(5.67)	(5.79)	(6.04)	(6.29)	(6.54)	(6.79)	(7.04)	(7.29)	(7.54)	(7.88)	(8.04)

Code: LS
Wheel Mount, 7/8-14 SAE O-Ring

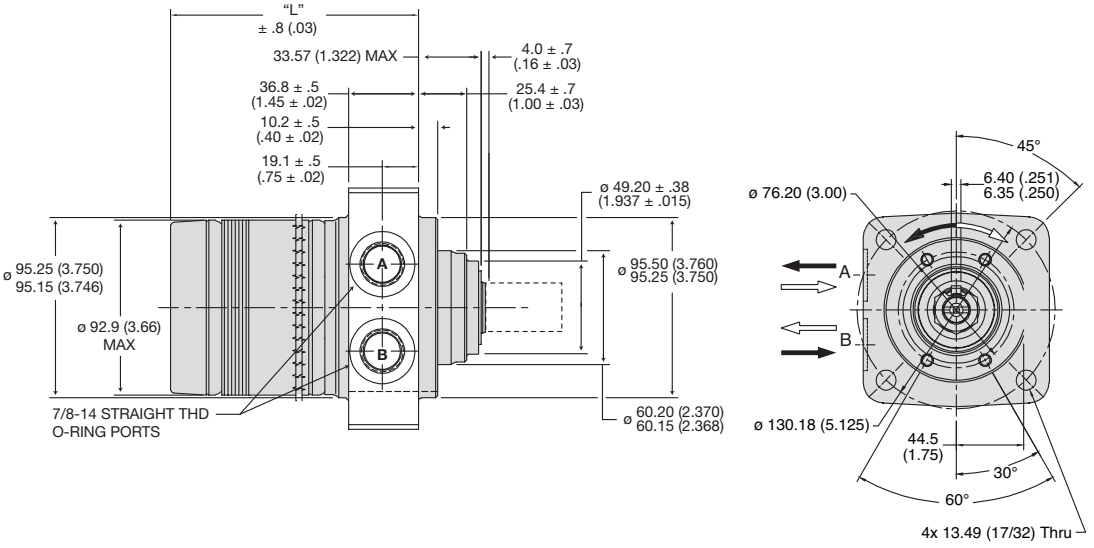

Code LS disp.	0036	0045	0050	0065	0080	0100	0130	0165	0195	0230	0260	0295	0330	0365	0390
Weight/Gewicht kg	**6.67**	**6.80**	**6.90**	**7.00**	**7.10**	**7.20**	**7.60**	**7.80**	**8.10**	**8.30**	**8.60**	**8.80**	**9.10**	**9.40**	**9.60**
Poids/Peso (lb)	(14.7)	(15.0)	(15.2)	(15.4)	(15.6)	(15.8)	(16.7)	(17.2)	(17.9)	(18.3)	(19.0)	(19.4)	(20.0)	(20.7)	(21.2)
Length "L" mm	**105.8**	**106.9**	**108.5**	**111.5**	**114.7**	**117.9**	**124.3**	**130.6**	**137.0**	**143.3**	**149.7**	**156.0**	**162.4**	**171.0**	**175.1**
"L" (in)	(4.17)	(4.21)	(4.27)	(4.39)	(4.52)	(4.64)	(4.89)	(5.14)	(5.39)	(5.64)	(5.89)	(6.14)	(6.39)	(6.73)	(6.89)

English equivalents for metric specifications are shown in ( ).

WARNING
This product can expose you to chemicals including lead and DEHP, which are known to the State of California to cause cancer, and birth defects or other reproductive harm. For more information go to www.p65warnings.ca.gov

Tel: +45 63 12 83 00 | Email: ps@hymatik.com | www.hymatik.com | Hvidkaervej 27a, DK-5250 Odense SV, Denmark

Code: US
Wheel Mount, 7/8-14 SAE O-Ring

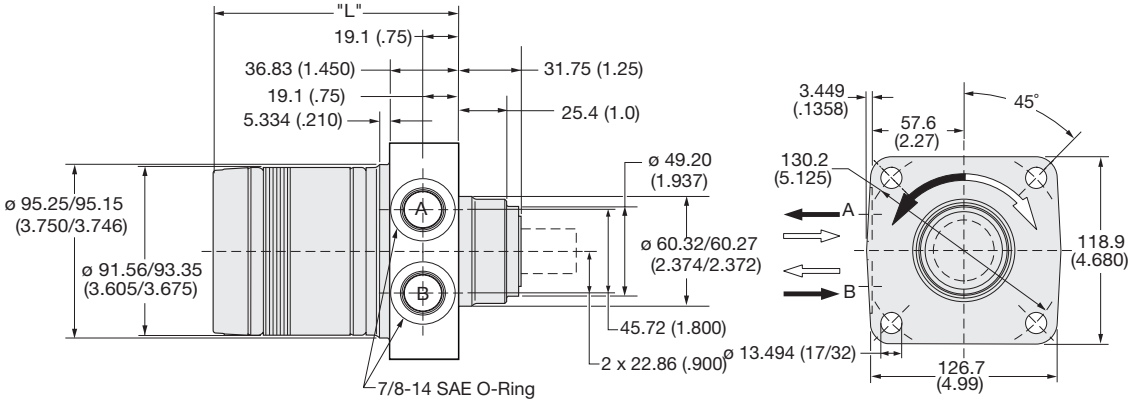

Code US disp.	0036	0045	0050	0065	0080	0100	0130	0165	0195	0230	0260	0295	0330	0365	0390
Weight/Gewicht kg	**6.67**	**6.80**	**6.90**	**7.00**	**7.10**	**7.20**	**7.60**	**7.80**	**8.10**	**8.30**	**8.60**	**8.80**	**9.10**	**9.40**	**9.60**
Poids/Peso (lb)	(14.7)	(15.0)	(15.2)	(15.4)	(15.6)	(15.8)	(16.7)	(17.2)	(17.9)	(18.3)	(19.0)	(19.4)	(20.0)	(20.7)	(21.2)
Length "L" mm	**105.8**	**106.9**	**108.5**	**111.5**	**114.7**	**117.9**	**124.3**	**130.6**	**137.0**	**143.3**	**149.7**	**156.0**	**162.4**	**171.0**	**175.1**
"L" (in)	(4.17)	(4.21)	(4.27)	(4.39)	(4.52)	(4.64)	(4.89)	(5.14)	(5.39)	(5.64)	(5.89)	(6.14)	(6.39)	(6.73)	(6.89)

English equivalents for metric specifications are shown in ( ).

English equivalents for metric specifications are shown in ( ).

WARNING
This product can expose you to chemicals including lead and DEHP, which are known to the State of California to cause cancer, and birth defects or other reproductive harm. For more information go to www.p65warnings.ca.gov

Tel: +45 63 12 83 00 | Email: ps@hymatik.com | www.hymatik.com | Hvidkaervej 27a, DK-5250 Odense SV, Denmark

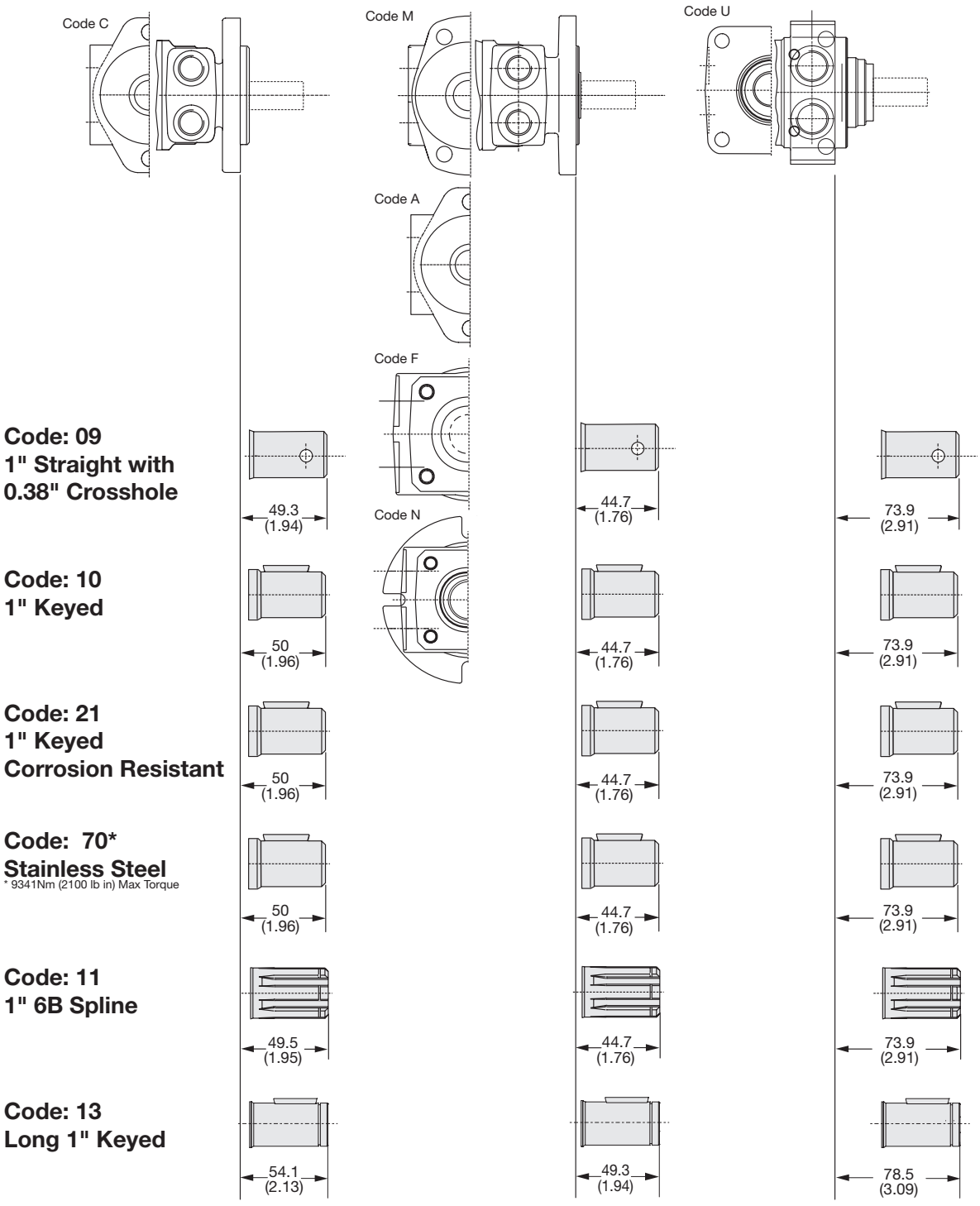

English equivalents for metric specifications are shown in ( ).

004 TE.indd, b

WARNING
This product can expose you to chemicals including lead and DEHP, which are known to the State of California to cause cancer, and birth defects or other reproductive harm. For more information go to www.p65warnings.ca.gov

Tel: +45 63 12 83 00 | Email: ps@hymatik.com | www.hymatik.com | Hvidkaervej 27a, DK-5250 Odense SV, Denmark

Code L

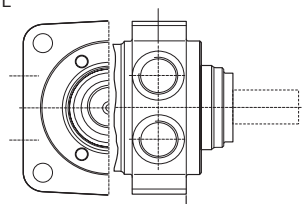

Code: 09
1" Straight with
0.38" Crosshole

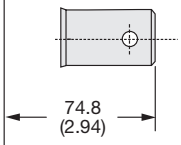

Code: 10
1" Keyed

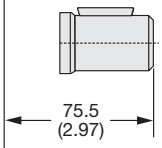

Code: 21
1" Keyed
Corrosion Resistant

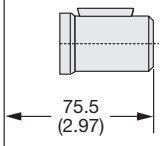

Code: 70*
1" Keyed, 1/4" Tap,
Stainless Steel
* 9341Nm (2100 lb in) Max Torque

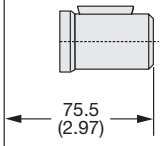

Code: 11
1" 6B Spline

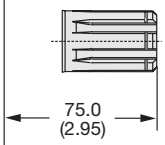

Code: 13
Long 1" Keyed

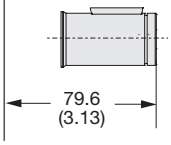

English equivalents for metric specifications are shown in ( ).

WARNING
This product can expose you to chemicals including lead and DEHP, which are known to the State of California to cause cancer, and birth defects or other reproductive harm. For more information go to www.p65warnings.ca.gov

Code: 09
1" Straight with
0.38" Crosshole

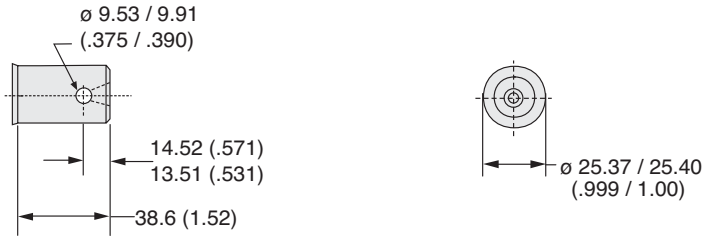

Code: 10
1" Keyed

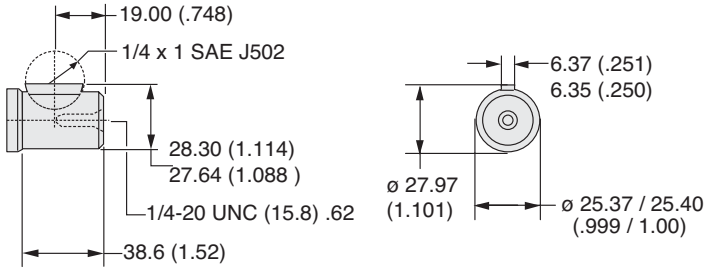

Code: 21
1" Keyed
Corrosion Resistant

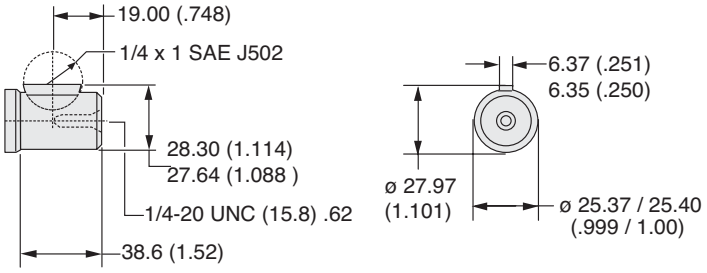

Code: 70*
1" Keyed, 1/4" Tap,
Stainless Steel

* 9341Nm (2100 lb in) Max Torque

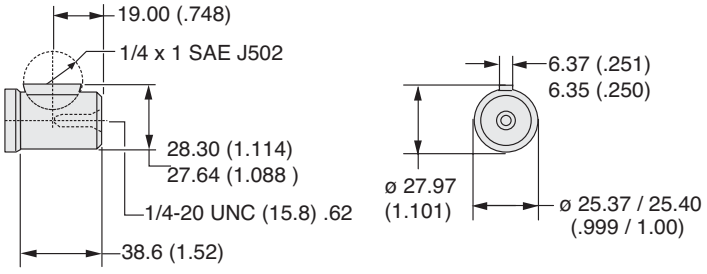

English equivalents for metric specifications are shown in ( ).

WARNING
This product can expose you to chemicals including lead and DEHP, which are known to the State of California to cause cancer, and birth defects or other reproductive harm. For more information go to www.p65warnings.ca.gov

Tel: +45 63 12 83 00 | Email: ps@hymatik.com | www.hymatik.com | Hvidkaervej 27a, DK-5250 Odense SV, Denmark

Code: 11
1" 6B Spline

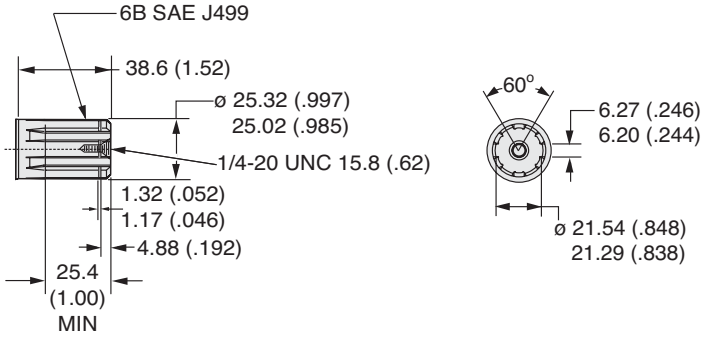

Code: 13
Long 1" Keyed

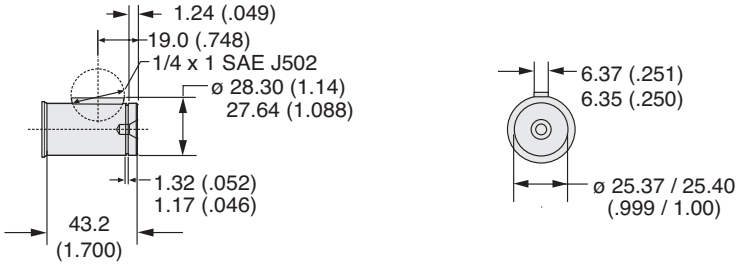

English equivalents for metric specifications are shown in ( ).

WARNING
This product can expose you to chemicals including lead and DEHP, which are known to the State of California to cause cancer, and birth defects or other reproductive harm. For more information go to www.p65warnings.ca.gov

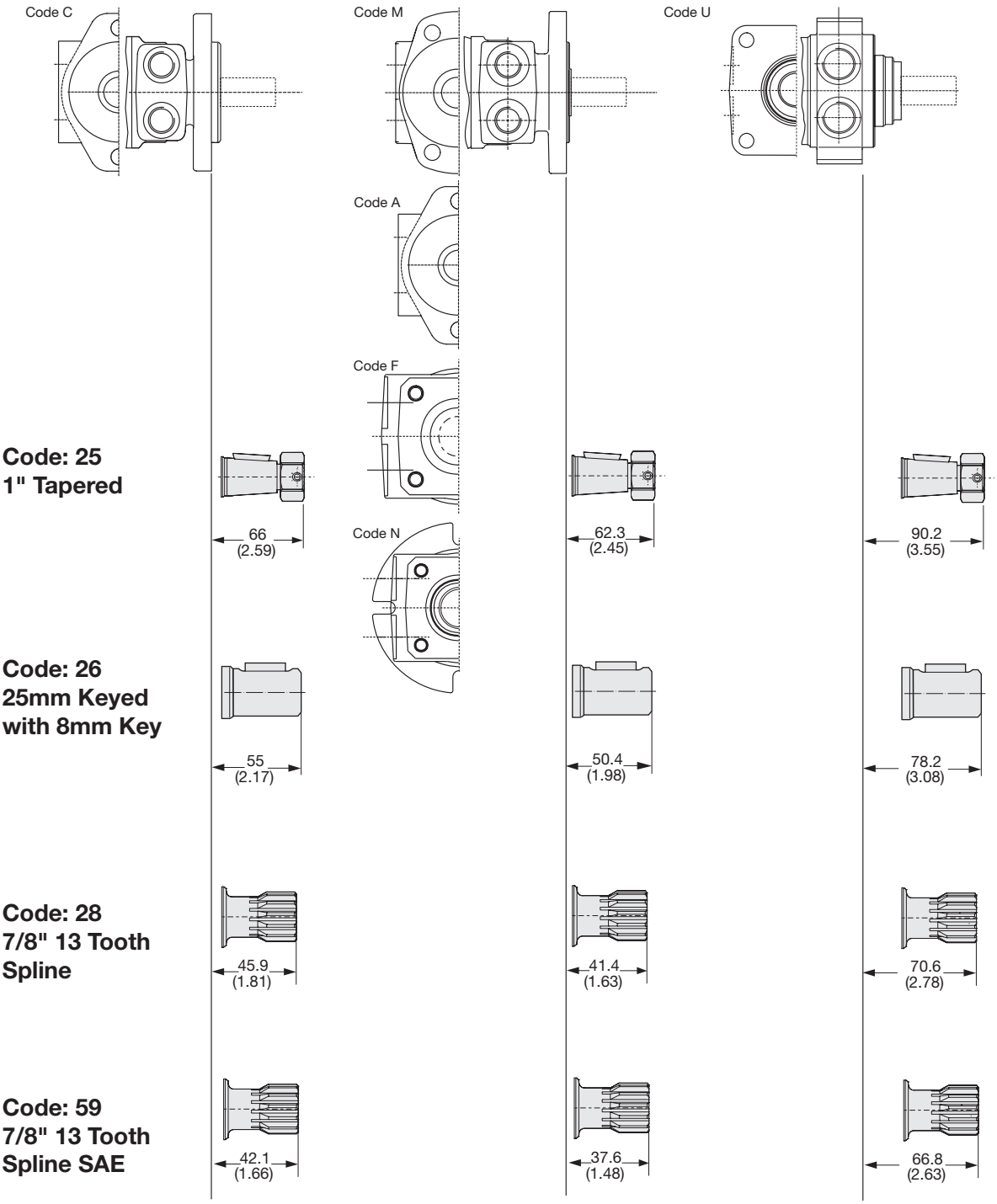

English equivalents for metric specifications are shown in ( ).

004 TE.indd, b

WARNING
This product can expose you to chemicals including lead and DEHP, which are known to the State of California to cause cancer, and birth defects or other reproductive harm. For more information go to www.p65warnings.ca.gov

Tel: +45 63 12 83 00 | Email: ps@hymatik.com | www.hymatik.com | Hvidkaervej 27a, DK-5250 Odense SV, Denmark

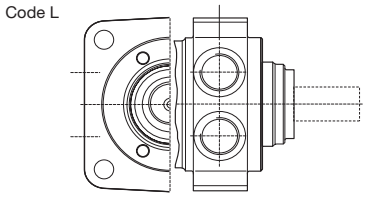

Code: 25
1" Tapered

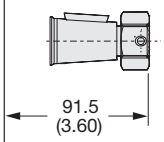

Code: 26
25mm Keyed
with 8mm Key

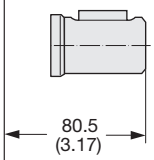

Code: 28
7/8" 13 Tooth
Spline

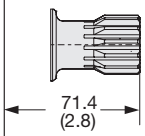

Code: 59
7/8" 13 Tooth
Spline SAE

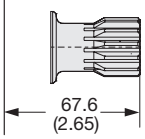

English equivalents for metric specifications are shown in ( ).

WARNING
This product can expose you to chemicals including lead and DEHP, which are known to the State of California to cause cancer, and birth defects or other reproductive harm. For more information go to www.p65warnings.ca.gov

Code: 25
1" Tapered

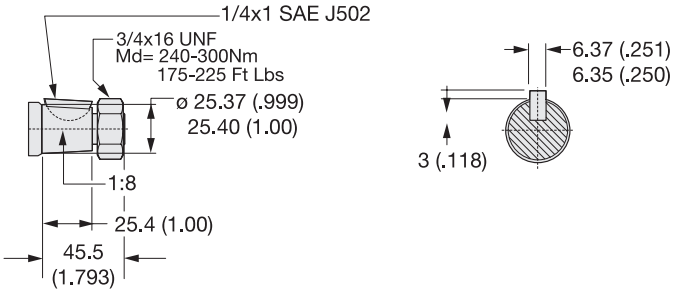

Code: 26
25mm Keyed with 8mm Key

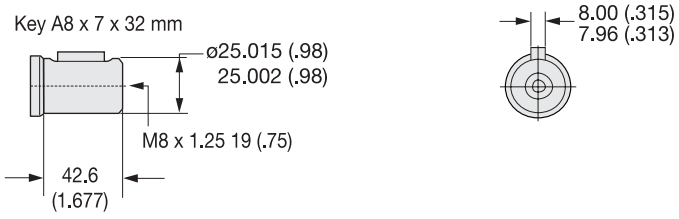

Code: 28
7/8" 13 Tooth Spline

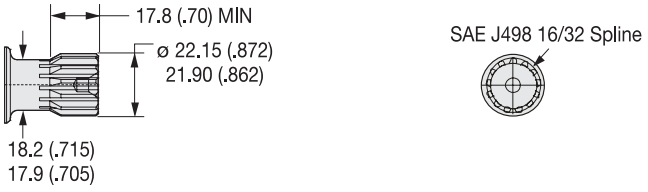

Code: 59
7/8" 13 Tooth Spline SAE



Code: 66
25mm Keyed with 8mm Key, Corrosion Resistant

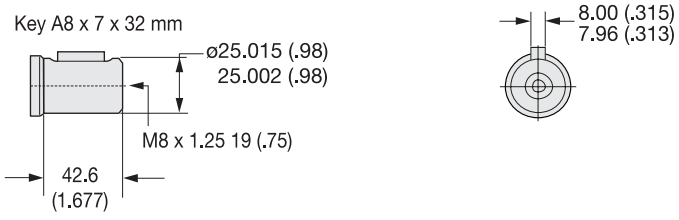

English equivalents for metric specifications are shown in ( ).

WARNING
This product can expose you to chemicals including lead and DEHP, which are known to the State of California to cause cancer, and birth defects or other reproductive harm. For more information go to www.p65warnings.ca.gov

Tel: +45 63 12 83 00 | Email: ps@hymatik.com | www.hymatik.com | Hvidkaervej 27a, DK-5250 Odense SV, Denmark

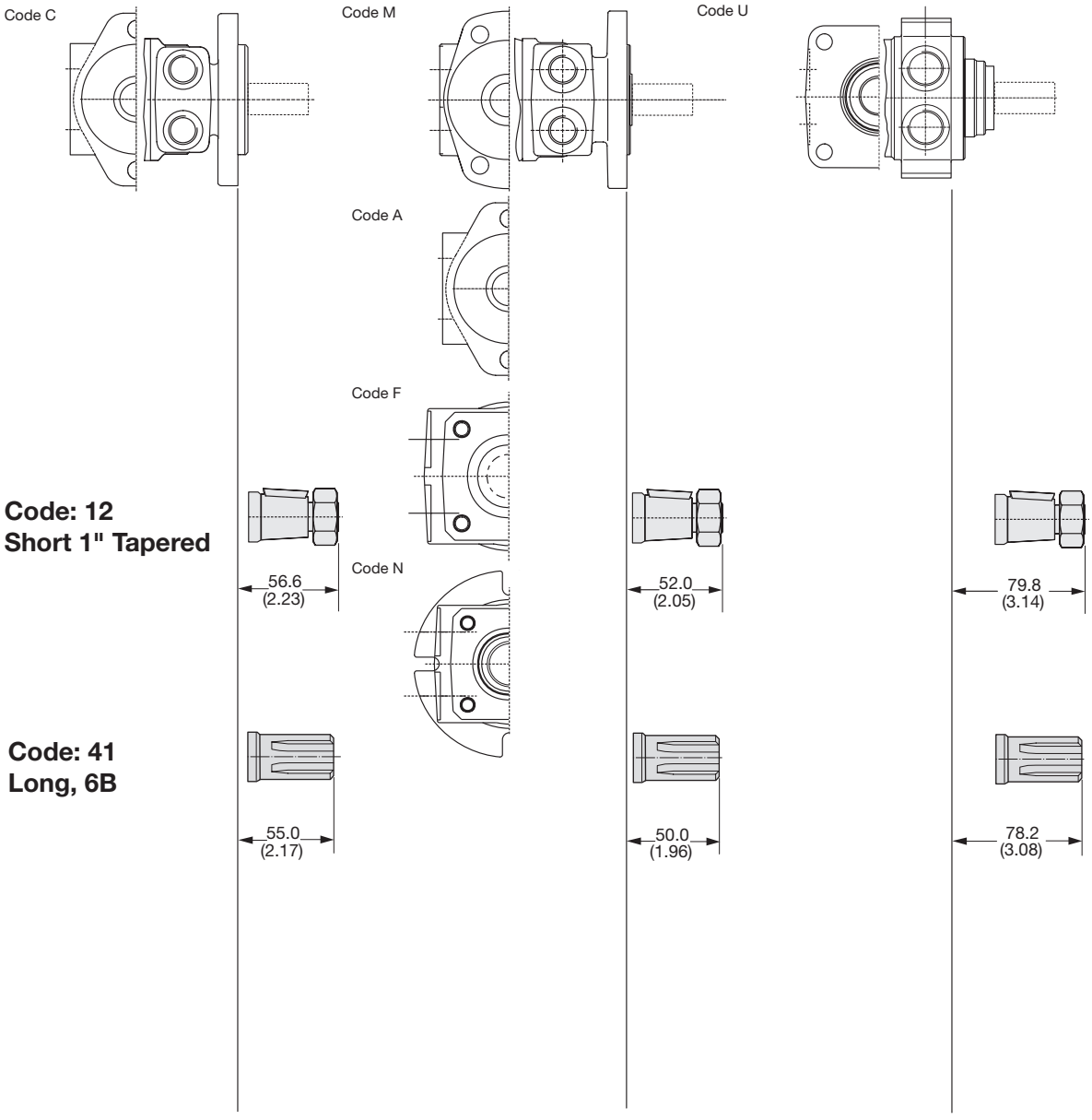

English equivalents for metric specifications are shown in ( ).

WARNING
This product can expose you to chemicals including lead and DEHP, which are known to the State of California to cause cancer, and birth defects or other reproductive harm. For more information go to www.p65warnings.ca.gov

Tel: +45 63 12 83 00 | Email: ps@hymatik.com | www.hymatik.com | Hvidkaervej 27a, DK-5250 Odense SV, Denmark

Code L

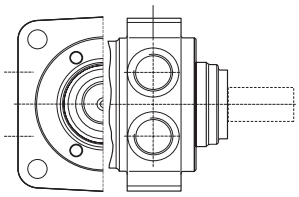

Code: 12
Short 1" Tapered

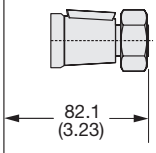

Code: 41
Long, 6B

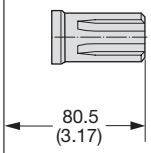

English equivalents for metric specifications are shown in ( ).

WARNING
This product can expose you to chemicals including lead and DEHP, which are known to the State of California to cause cancer, and birth defects or other reproductive harm. For more information go to www.p65warnings.ca.gov

Code: 12
Short 1" Tapered

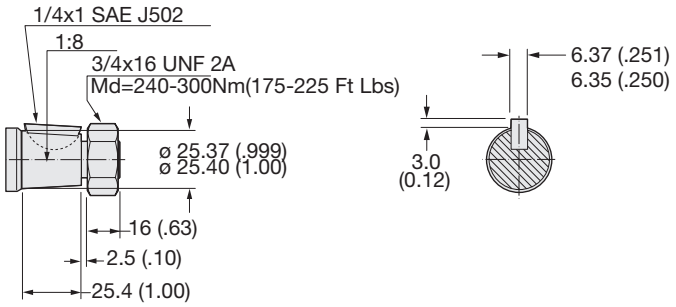

Code: 41
Long, 6B

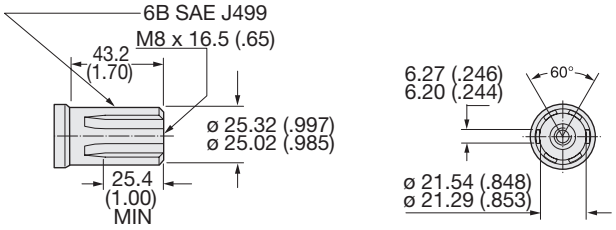

English equivalents for metric specifications are shown in ( ).

WARNING
This product can expose you to chemicals including lead and DEHP, which are known to the State of California to cause cancer, and birth defects or other reproductive harm. For more information go to www.p65warnings.ca.gov

Tel: +45 63 12 83 00 | Email: ps@hymatik.com | www.hymatik.com | Hvidkaervej 27a, DK-5250 Odense SV, Denmark

Notes

WARNING
This product can expose you to chemicals including lead and DEHP, which are known to the State of California to cause cancer, and birth defects or other reproductive harm. For more information go to www.p65warnings.ca.gov

Parker Hannifin Corporation
Pump & Motor Division
Greeneville, Tennessee, USA

Tel: +45 63 12 83 00 | Email: ps@hymatik.com | www.hymatik.com | Hvidkaervej 27a, DK-5250 Odense SV, Denmark

14 Displacements	(2.5 – 24.0 in³/rev)
14 Schluckvolumen	**41 . . . 390 cm³/rev**
14 Cylindrée	
14 Despazamientos	

	Cont	Int
Maximum Pressure	(2030 psid)	(2750 psid)
Eingangsdruck	**. . .140 bar**	**. . .190 bar**
Pression entrée		
Presion Maxima		

Maximum Oil Flow	(20 gpm)
Schluckstrom	**. . . 75 lpm**
Débit d'huile	
Caudal Maximo de Aceite	

Maximum Speed	(1024 rpm)
Drehzahl	**1024 rpm**
Vitisse de rotation Maxi	
Velocidad Maxima	

	Cont	Int
Maximum Torque	(4139 lb in)	(5728 lb in)
Max Drehmoment	**467 Nm**	**648 Nm**
Couple Maxi		
Torque Maximo		

Maximum Side Load at Key	(3150 lb)
Seitenlast	**. . . 14000 N**
Charges latèrales	
Carga Maxima Lateral	

The Ultimate in Performance from a Light Duty Wheel Motor

The TJ Series marries the TE Series drive train with a larger and heavier roller bearing and shaft. It provides all that could be expected of a light duty wheel motor and more. Unique 60:40 spline geometry provides drivetrain strength for severe applications. Roller vanes and sealed orbit commutation assure high volumetric efficiency and smooth slow speed operation. Cooling fluid flow across splines and seals mean long, trouble-free life.

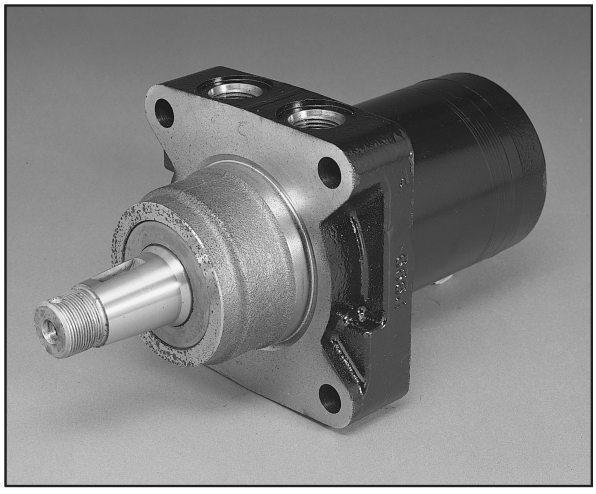

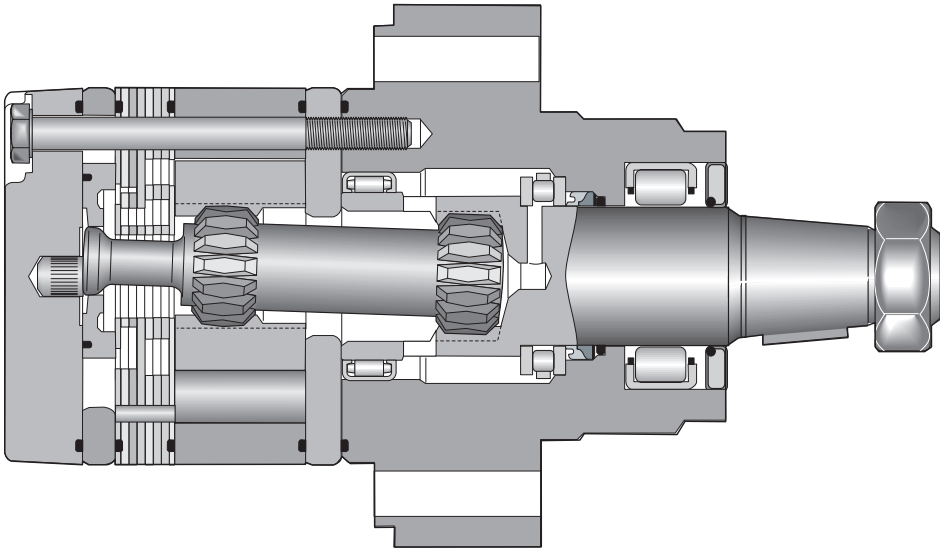

005 TJ.indd, b

WARNING
This product can expose you to chemicals including lead and DEHP, which are known to the State of California to cause cancer, and birth defects or other reproductive harm. For more information go to www.p65warnings.ca.gov

Tel: +45 63 12 83 00 | Email: ps@hymatik.com | www.hymatik.com | Hvidkaervej 27a, DK-5250 Odense SV, Denmark

Ordering Information / Bestellschlüssel
System de Commande / Imformacion para pedidos

LSHT Torqmotors™ and Nichols™ Motors
TJ Series / Serie / Série HY13-1590-011/US,EU

TJ	XXXX	US	08	0	XXXX
Series	Displacement Schluckvolumen Cylindrée Desplazamiento	Mounting/Ports Gehäuse/Anschluß Carter/Plan de raccordement Montaje/Lumbreras	Shaft Welle Arbre Eje	Rotation Drehrichtung Direction de rotation Rotacion	Options Opciones

Code	cm^3/tr $cm^3/giro$	in^3/rev
0036	36	2.2
0045	41	2.5
0050	49	3.0
0065	65	4.0
0080	82	5.0
0100	98	6.0
0130	130	8.0
0165	163	10.0
0195	195	11.9
0230	228	13.9
0260	260	15.9
0295	293	17.9
0330	328	20.0
0365	370	22.6
0390	392	24.0

Code	Mounting/Ports
US	Wheel Mount, 7/8-14 SAE 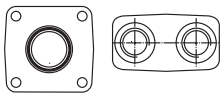

Code	Shaft
08	1 1/4" Tapered* 

*See installation instructions.

Code	Rotation
0	Standard 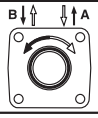
1	Reverse Timed Manifold 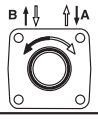

Code	Options
AAAA[6]	"Standard", Black Paint
AAAB	"Standard", No Paint
AAAC[6]	"Standard", Double Paint
AABJ[1,6]	Free Running Rotor Set, Black Paint
AABT[4,6]	No Nut, Black Paint
AAFA	Fluorocarbon Seals, High Temp Commutator Seal, High Temp Section seals, No Paint
AAFW[6]	Fluorocarbon Seals, High Temp Commutator Seal, High Temp Section Seals, Black Paint
AAJH[4,6]	No Shaft Hareware, Fluorocarbon Seals, High Temp Commutator Seal, High Temp Section Seals, Spl paint area (AO except front and rear pilot and mounting flanges and shaft) Black Paint
AAJL[4]	No Nut, No Paint
AAUP[4,6]	Fluorocarbon Seals, High Temp Commutator Seal, High Temp Section Seals, No Nut, Black Paint
AAVE[1,6]	Free Running Rotor Set, Fluorocarbon Seals, High Temp High Temp Section Seals, Commutator Seal, Black Paint
ABCW[4,6]	No Shaft Hardware, Fluorocarbon Seals, High Temperature Commutator Seal, High Temp Section Seals, Bidirectional shuttle (.062 Orifice) (11:00*), Black Paint
ABCZ[6]	Fluorocarbon Seals, Double paint, High Temp Commutator Seal, High Temp Section Seals
BBGS[4]	No Shaft Hardware, Fluorocarbon Seals, High Temperature Commutator Seal, High Temp Section Seals, 921 PSI Int Bidirectional Relief, Black Paint
BBGT[4]	No Shaft Hardware, Fluorocarbon Seals, High Temperature Commutator Seal, High Temp Section Seals, 1200 PSI Int Bidirectional Relief, Black Paint
BBGU[3,4]	No Shaft Hardware, Fluorocarbon Seals, High Temperature Commutator Seal, High Temp Section Seals, 2030 PSI Int Bidirectional Relief, Black Paint
BBGW[6]	No Shaft Hardware, Fluorocarbon Seals, High Temperature Commutator Seal, 1450 PSI Int Bidirectional Relief, Black Paint
BBHB[4,5,6]	No Shaft Hardware, Fluorocarbon Seals, High Temperature Commutator Seal, 2393 PSI Int Bidirectional Relief, Black Paint

[1] Not applicable to 0365 & 0390 displacements
[3] Not applicable to 0230, 0295, 0330, 0365 or 0390 displacements
[4] No Nut with shaft code 8
[5] Not applicable to 0260, 0295, 0330, 0365 or 0390 displacements
[6] Paint area all over except front and rear pilot and mounting flanges and shaft

Shaded areas indicate custom order components. Standard pricing and delivery terms may not apply to these components. Please refer to the price list for details, or consult your Parker Pump Motor division Sales Resource.

WARNING
This product can expose you to chemicals including lead and DEHP, which are known to the State of California to cause cancer, and birth defects or other reproductive harm. For more information go to www.p65warnings.ca.gov

Tel: +45 63 12 83 00 | Email: ps@hymatik.com | www.hymatik.com | Hvidkaervej 27a, DK-5250 Odense SV, Denmark

Performance Data / Leistungsdaten
Puissance / Datos Tecnicos

LSHT Torqmotors™ and Nichols™ Motors
TJ Series / Serie / Série HY13-1590-011/US,EU

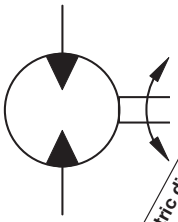

Motor Series TJ	Geometric displacement Geom. Schluckvolumen Cylindrée Desplazamientos cm³/rev in³/rev	Max. speed @ Max. intermittent flow Max. Drehzahl Intermittierender Betrieb: Vitesse de rotation maxi Velocidad maxima a caudal intermitente maximo *Int* rev/min	Max. oil flow Max. Schluckstrom Débit d'huile maxi Caudal Maximo de Aceite *cont / int** l/min g/min		Max. Differential Pressure Max. Druckgefälle Chute de pression maxi Presion diferencial maxima *cont / int** bar psid		Max. supply pressure Max. Eingangsdruck Pression maxi entrée Presion maxima de alimentacion *max* bar psig	Max. torque Max. Drehmoment Couple maxi Torque Maximo *cont / int** Nm lb-in		Max. performance Max. Leistungabgabe Puissance de sortie maxi Maximo redimiento *max* KW HP	Min. starting torque Min. Anlaufmoment Couple min. fourni au dé manrage Torque minimo de arranque *cont / int** Nm lb-in	
TJ 0036	**36** 2.2	1141	**34** 9	**42** 11	**140** 2030	**190** 2750	**200** 2900	**54.6** 483	**71.1** 630	**8.5** 11.4	**44** 389	**52** 460
TJ 0045	**41** 2.5	1024	**34** 9	**42** 11	**140** 2030	**190** 2750	**200** 2900	**71** 624	**99** 876	**10.4** 13.9	**44** 411	**64** 565
TJ 0050	**49** 3.0	1020	**34** 9	**50** 13	**140** 2030	**190** 2750	**200** 2900	**90** 796	**127** 1120	**12.8** 17.2	**72** 637	**98** 871
TJ 0065	**65** 4.0	877	**45** 12	**57** 15	**140** 2030	**190** 2750	**200** 2900	**125** 1106	**176** 1558	**14.7** 19.8	**100** 885	**137** 1211
TJ 0080	**82** 5.0	695	**45** 12	**57** 15	**140** 2030	**190** 2750	**200** 2900	**160** 1416	**220** 1947	**17.3** 23.2	**128** 1133	**171** 1515
TJ 0100	**98** 6.0	582	**45** 12	**57** 15	**140** 2030	**190** 2750	**200** 2900	**190** 1682	**264** 2337	**17.4** 23.4	**152** 1345	**205** 1819
TJ 0130	**130** 8.0	438	**45** 12	**57** 15	**140** 2030	**190** 2750	**200** 2900	**255** 2257	**352** 3116	**17.3** 23.2	**204** 1806	**274** 2423
TJ 0165	**163** 10.0	348	**45** 12	**57** 15	**140** 2030	**190** 2750	**200** 2900	**310** 2744	**436** 3846	**17.0** 22.8	**248** 2195	**338** 2992
TJ 0195	**195** 11.9	292	**45** 12	**57** 15	**140** 2030	**190** 2750	**200** 2900	**390** 3452	**528** 4673	**17.4** 23.4	**312** 2762	**411** 3637
TJ 0230	**228** 13.9	328	**57** 15	**75** 20	**120** 1740	**165** 2400	**200** 2900	**380** 3363	**514** 4554	**17.7** 23.8	**304** 2691	**411** 3637
TJ 0260	**260** 15.9	287	**57** 15	**75** 20	**110** 1595	**155** 2250	**200** 2900	**400** 3540	**550** 4870	**16.7** 22.4	**320** 2832	**449** 3977
TJ 0295	**293** 17.9	256	**57** 15	**75** 20	**100** 1450	**145** 2100	**200** 2900	**428** 3784	**582** 5180	**15.7** 21.0	**328** 2903	**445** 3939
TJ 0330	**328** 20.0	228	**57** 15	**75** 20	**100** 1450	**135** 1950	**200** 2900	**443** 3926	**600** 5312	**14.8** 19.8	**344** 3045	**453** 4014
TJ 0365	**370** 22.6	203	**57** 15	**75** 20	**95** 1378	**125** 1825	**200** 2900	**467** 4133	**648** 5728	**13.6** 18.2	**373** 3301	**477** 4223
TJ 0390	**392** 24.0	191	**57** 15	**75** 20	**85** 1233	**120** 1740	**200** 2900	**445** 3935	**628** 5562	**12.5** 16.8	**348** 3080	**462** 4090

Performance data based on testing using 10W40 oil with a viscosity of 43,1 cSt. (200 SUS) at 54° C (130° F.). Performance data is typical. Actual data may vary slightly from one production motor to another.

Les donnees sur les performances sont basees sur des tests utilisant de l'huile 10W40 d'une viscosite de 200 SUS a 54°C (130°F). Ces donnees correspondent a des situations typiques. Les donnees reelles peuvent varier legerement d'un moteur de production a l'autre.

Leistungsdaten sind gemessen mit SAE 10W40 bei einer Viskositaet von 43,1 Cst bei 54°C. Geringfuegige Abweichungen von den Katalogdaten sind moeglich.

Datos tecnicos obtenidos con aceite 10W40 de 200 SUS de viscosidad a 54°C (130°F). Los datos proporcionados son valores tipcos. Los valores exactos reales podrian tener una pequena variacion entre distintos motores.

* Intermittent operation rating applies to 10% of every minute.
Intermittierende Werte maximal 10% von jeder Betriebsminute.
Fonctionnement interm. 10% max. de chaque minute d`utilisation.
Capacidad de funcionamiento intermitente valida para 10% por cada minuto.

WARNING
This product can expose you to chemicals including lead and DEHP, which are known to the State of California to cause cancer, and birth defects or other reproductive harm. For more information go to www.p65warnings.ca.gov

Tel: +45 63 12 83 00 | Email: ps@hymatik.com | www.hymatik.com | Hvidkaervej 27a, DK-5250 Odense SV, Denmark

TJ 0036

2.2 cu in / rev

Flow (GPM)	PRESSURE (PSID) 500	1000	1500	2000	2750
.5	111 **44**	225 **37**	346 **25**	470 **15**	
1	113 **96**	231 **86**	353 **77**	480 **67**	670 **40**
2	115 **202**	239 **190**	365 **179**	495 **169**	691 **140**
3	113 **307**	241 **296**	371 **282**	505 **269**	709 **240**
4	109 **411**	241 **397**	373 **384**	509 **371**	722 **340**
5	103 **516**	237 **501**	371 **486**	509 **470**	726 **440**
7	87 **724**	225 **709**	361 **691**	501 **674**	711 **641**
9	72 **933**	208 **916**	344 **897**	482 **877**	672 **841**
11	54 **1142**	190 **1117**	326 **1096**	462 **1075**	629 **1045**

TORQUE (LB IN) 711
SPEED (RPM) 641

TJ 0045

2.5 cu in / rev

Flow (GPM)	PRESSURE (PSID) 500	1000	1500	2000	2750
.5	121 **41**	272 **35**	425 **28**	579 **22**	809 **10**
1	126 **86**	282 **79**	440 **72**	599 **65**	832 **50**
2	128 **176**	288 **168**	452 **161**	619 **152**	860 **136**
3	126 **266**	287 **257**	453 **249**	620 **239**	874 **221**
4	123 **356**	285 **346**	454 **337**	624 **326**	876 **306**
5	119 **446**	281 **435**	451 **425**	624 **413**	874 **392**
7	105 **625**	270 **613**	440 **601**	615 **587**	862 **562**
9	94 **805**	259 **791**	430 **777**	605 **761**	865 **733**
11	79 **984**	245 **968**	415 **951**	590 **930**	848 **897**

TORQUE (LB IN) 862
SPEED (RPM) 562

■ Cont. □ Int.

Intermittent operation rating applies to 10% of every minute.

Fonctionnement interm. 10% max. de chaque minute d'utilisation.

Performance data based on testing using 10W40 oil with a viscosity of 200 SUS at 54° C (130° F.). Performance data is typical. Actual data may vary slightly from one production motor to another.

Les donnees sur les performances sont basees sur des tests utilisant de l'huile 10W40 d'une viscosite de 200 SUS a 54°C (130°F). Ces donnees correspondent a des situations typiques. Les donnees reelles peuvent varier legerement d'un moteur de production a l'autre.

Intermittierende Werte maximal 10% von jeder Betriebsminute.

Capacidad de funcionamiento intermitente valida para 6 segundos por cada minuto.

Leistungsdaten sind gemessen mit SAE 10W40 bei einer Viskositaet von 43,1 Cst bei 54°C. Geringfuegige Abweichungen von den Katalogdaten sind moeglich.

Datos tecnicos obtenidos con aceite 10W40 de 200 SUS de viscosidad a 54°C (130°F). Los datos proporcionados son valores tipcos. Los valores exactos reales podrian tener una pequena variacion entre distintos motores.

⚠ **WARNING**
This product can expose you to chemicals including lead and DEHP, which are known to the State of California to cause cancer, and birth defects or other reproductive harm. For more information go to www.p65warnings.ca.gov

Tel: +45 63 12 83 00 | Email: ps@hymatik.com | www.hymatik.com | Hvidkaervej 27a, DK-5250 Odense SV, Denmark

TJ 0050 — 3.0 cu in / rev

PRESSURE (PSID)

Flow (GPM)	500	1000	1500	2000	2750
.5	146 **32**	327 **23**	516 **13**	705 **6**	
1	159 **69**	345 **60**	537 **50**	727 **41**	1005 **18**
2	170 **146**	364 **136**	563 **124**	764 **113**	1051 **85**
3	167 **225**	363 **214**	565 **203**	768 **191**	1079 **161**
4	169 **294**	367 **282**	574 **271**	784 **260**	1089 **232**
5	165 **363**	365 **349**	574 **339**	785 **327**	1099 **294**
7	156 **501**	357 **485**	568 **474**	782 **460**	1094 **429**
9	141 **640**	342 **621**	555 **609**	771 **594**	1084 **561**
13	86 **903**	299 **879**	506 **868**	724 **852**	1038 **809**

TORQUE (LB IN) 1094
SPEED (RPM) 429

TJ 0065 — 4.0 cu in / rev

PRESSURE (PSID)

Flow (GPM)	500	1000	1500	2000	2750
.5	220 **24**	481 **17**	743 **11**	1004 **3**	
1	232 **52**	498 **45**	763 **38**	1025 **31**	1418 **20**
2	239 **109**	512 **102**	789 **94**	1066 **85**	1457 **67**
3	238 **167**	512 **159**	790 **151**	1068 **141**	1489 **122**
4	237 **224**	514 **215**	795 **207**	1078 **197**	1496 **180**
5	233 **279**	511 **271**	794 **262**	1080 **252**	1500 **235**
7	216 **386**	497 **376**	783 **366**	1072 **356**	1496 **337**
9	195 **494**	477 **483**	764 **472**	1054 **460**	1492 **440**
12	152 **654**	435 **641**	724 **629**	1017 **617**	1450 **596**
15	102 **802**	388 **789**	680 **775**	969 **763**	1394 **740**

TORQUE (LB IN) 1496
SPEED (RPM) 337

■ Cont. □ Int.

Intermittent operation rating applies to 10% of every minute.

Fonctionnement interm. 10% max. de chaque minute d'utilisation.

Performance data based on testing using 10W40 oil with a viscosity of 200 SUS at 54° C (130° F.). Performance data is typical. Actual data may vary slightly from one production motor to another.

Les donnees sur les performances sont basees sur des tests utilisant de l'huile 10W40 d'une viscosite de 200 SUS a 54°C (130°F). Ces donnees correspondent a des situations typiques. Les donnees reelles peuvent varier legerement d'un moteur de production a l'autre.

Intermittierende Werte maximal 10% von jeder Betriebsminute.

Capacidad de funcionamiento intermitente valida para 6 segundos por cada minuto.

Leistungsdaten sind gemessen mit SAE 10W40 bei einer Viskositaet von 43,1 Cst bei 54°C. Geringfuegige Abweichungen von den Katalogdaten sind moeglich.

Datos tecnicos obtenidos con aceite 10W40 de 200 SUS de viscosidad a 54°C (130°F). Los datos proporcionados son valores tipcos. Los valores exactos reales podrian tener una pequena variacion entre distintos motores.

⚠ **WARNING**
This product can expose you to chemicals including lead and DEHP, which are known to the State of California to cause cancer, and birth defects or other reproductive harm. For more information go to www.p65warnings.ca.gov

Tel: +45 63 12 83 00 | Email: ps@hymatik.com | www.hymatik.com | Hvidkaervej 27a, DK-5250 Odense SV, Denmark

TJ 0080 — 5.0 cu in / rev

PRESSURE (PSID)

Flow (GPM)	500	1000	1500	2000	2750
.5	261 **17**	575 **8**			
1	276 **39**	596 **30**	918 **23**	1245 **13**	
2	290 **85**	631 **76**	974 **68**	1310 **56**	1774 **37**
3	291 **131**	633 **122**	978 **113**	1319 **101**	1819 **79**
4	293 **177**	642 **167**	995 **158**	1347 **146**	1846 **122**
5	290 **223**	641 **213**	999 **203**	1359 **191**	1869 **166**
7	273 **316**	628 **304**	989 **293**	1353 **280**	1887 **255**
9	249 **408**	603 **396**	966 **384**	1334 **370**	1869 **340**
12	197 **546**	551 **533**	916 **519**	1287 **504**	1815 **472**
15	136 **686**	494 **670**	857 **655**	1226 **638**	1756 **605**

TORQUE (LB IN) 1887
SPEED (RPM) 255

TJ 0100 — 6.0 cu in / rev

PRESSURE (PSID)

Flow (GPM)	500	1000	1500	2000	2750
.5	315 **14**	687 **7**			
1	332 **33**	710 **26**	1083 **18**	1460 **9**	
2	348 **71**	751 **64**	1152 **55**	1541 **45**	2081 **27**
3	350 **109**	756 **102**	1160 **92**	1556 **83**	2145 **62**
4	353 **147**	768 **140**	1185 **130**	1596 **120**	2193 **99**
5	349 **186**	771 **178**	1197 **168**	1622 **158**	2220 **138**
7	330 **263**	759 **254**	1191 **244**	1624 **232**	2251 **209**
9	302 **340**	731 **330**	1167 **319**	1606 **307**	2251 **284**
12	243 **456**	671 **444**	1111 **433**	1555 **420**	2193 **394**
15	176 **572**	606 **558**	1042 **546**	1484 **533**	2113 **506**

TORQUE (LB IN) 2251
SPEED (RPM) 209

■ Cont. □ Int.

Intermittent operation rating applies to 10% of every minute.

Fonctionnement interm. 10% max. de chaque minute d'utilisation.

Performance data based on testing using 10W40 oil with a viscosity of 200 SUS at 54° C (130° F.). Performance data is typical. Actual data may vary slightly from one production motor to another.

Les donnees sur les performances sont basees sur des tests utilisant de l'huile 10W40 d'une viscosite de 200 SUS a 54°C (130°F). Ces donnees correspondent a des situations typiques. Les donnees reelles peuvent varier legerement d'un moteur de production a l'autre.

Intermittierende Werte maximal 10% von jeder Betriebsminute.

Capacidad de funcionamiento intermitente valida para 6 segundos por cada minuto.

Leistungsdaten sind gemessen mit SAE 10W40 bei einer Viskositaet von 43,1 Cst bei 54°C. Geringfuegige Abweichungen von den Katalogdaten sind moeglich.

Datos tecnicos obtenidos con aceite 10W40 de 200 SUS de viscosidad a 54°C (130°F). Los datos proporcionados son valores tipcos. Los valores exactos reales podrian tener una pequena variacion entre distintos motores.

⚠ **WARNING**
This product can expose you to chemicals including lead and DEHP, which are known to the State of California to cause cancer, and birth defects or other reproductive harm. For more information go to www.p65warnings.ca.gov

Tel: +45 63 12 83 00 | Email: ps@hymatik.com | www.hymatik.com | Hvidkaervej 27a, DK-5250 Odense SV, Denmark

TJ 0130 — 8.0 cu in / rev

PRESSURE (PSID)

Flow (GPM)	500	1000	1500	2000	2750
.5	445 **12**	962 **10**	1488 **7**	2018 **3**	
1	464 **27**	996 **24**	1525 **21**	2051 **17**	2839 **4**
2	482 **55**	1032 **53**	1584 **49**	2136 **44**	2917 **31**
3	483 **84**	1037 **81**	1594 **77**	2150 **72**	2979 **60**
4	483 **113**	1051 **110**	1619 **105**	2184 **100**	3018 **87**
5	478 **142**	1050 **138**	1625 **133**	2201 **128**	3041 **115**
7	450 **200**	1029 **195**	1613 **190**	2195 **183**	3049 **170**
9	414 **257**	993 **252**	1579 **247**	2166 **239**	3033 **223**
12	338 **344**	915 **338**	1503 **331**	2096 **323**	2963 **306**
15	252 **431**	827 **424**	1408 **416**	1996 **407**	2854 **389**

TORQUE (LB IN) 3049
SPEED (RPM) 170

TJ 0165 — 10.0 cu in / rev

PRESSURE (PSID)

Flow (GPM)	500	1000	1500	2000	2750
.5	552 **9**	1175 **7**	1813 **4**	2457 **3**	
1	574 **21**	1213 **18**	1856 **16**	2499 **12**	3472 **6**
2	597 **44**	1263 **41**	1938 **38**	2614 **33**	3576 **25**
3	600 **67**	1273 **64**	1955 **60**	2634 **55**	3654 **46**
4	603 **90**	1299 **87**	1997 **83**	2691 **78**	3706 **67**
5	597 **113**	1302 **109**	2015 **105**	2727 **100**	3758 **89**
7	569 **159**	1286 **155**	2009 **150**	2732 **144**	3784 **133**
9	523 **205**	1244 **201**	1976 **195**	2707 **189**	3766 **177**
12	429 **274**	1152 **269**	1890 **263**	2630 **256**	3697 **242**
15	316 **344**	1039 **338**	1769 **331**	2500 **323**	3576 **308**

TORQUE (LB IN) 3784
SPEED (RPM) 133

■ Cont. □ Int.

Intermittent operation rating applies to 10% of every minute.

Fonctionnement interm. 10% max. de chaque minute d'utilisation.

Performance data based on testing using 10W40 oil with a viscosity of 200 SUS at 54° C (130° F.). Performance data is typical. Actual data may vary slightly from one production motor to another.

Les donnees sur les performances sont basees sur des tests utilisant de l'huile 10W40 d'une viscosite de 200 SUS a 54°C (130°F). Ces donnees correspondent a des situations typiques. Les donnees reelles peuvent varier legerement d'un moteur de production a l'autre.

Intermittierende Werte maximal 10% von jeder Betriebsminute.

Capacidad de funcionamiento intermitente valida para 6 segundos por cada minuto.

Leistungsdaten sind gemessen mit SAE 10W40 bei einer Viskositaet von 43,1 Cst bei 54°C. Geringfuegige Abweichungen von den Katalogdaten sind moeglich.

Datos tecnicos obtenidos con aceite 10W40 de 200 SUS de viscosidad a 54°C (130°F). Los datos proporcionados son valores tipcos. Los valores exactos reales podrian tener una pequena variacion entre distintos motores.

WARNING
This product can expose you to chemicals including lead and DEHP, which are known to the State of California to cause cancer, and birth defects or other reproductive harm. For more information go to www.p65warnings.ca.gov

Tel: +45 63 12 83 00 | Email: ps@hymatik.com | www.hymatik.com | Hvidkaervej 27a, DK-5250 Odense SV, Denmark

TJ 0195

11.9 cu in / rev

Flow (GPM)	PRESSURE (PSID) 500	1000	1500	2000	2500
.5	710 **8**	1519 **7**	2344 **5**	3182 **3**	
1	736 **18**	1558 **16**	2387 **14**	3221 **12**	4466 **6**
2	758 **37**	1596 **35**	2445 **33**	3302 **30**	4528 **22**
3	758 **56**	1604 **54**	2459 **51**	3315 **48**	4600 **39**
4	757 **75**	1618 **73**	2482 **70**	3346 **67**	4620 **56**
5	747 **95**	1615 **92**	2488 **89**	3360 **85**	4630 **74**
7	705 **133**	1586 **130**	2467 **127**	3343 **122**	4620 **111**
9	646 **172**	1528 **169**	2415 **165**	3300 **160**	4579 **147**
12	530 **230**	1408 **226**	2303 **221**	3197 **215**	4497 **201**
15	394 **288**	1273 **283**	2147 **278**	3027 **272**	4292 **256**

TORQUE (LB IN) 4620
SPEED (RPM) 111

TJ 0230

13.9 cu in / rev

Flow (GPM)	PRESSURE (PSID) 500	1000	1500	1750	2000	2400
.5	761 **7**	1673 **6**	2614 **5**	3094 **4**	3584 **3**	4347 **3**
1	791 **15**	1712 **14**	2650 **13**	3128 **12**	3615 **11**	4367 **9**
2	819 **32**	1764 **30**	2726 **29**	3208 **28**	3692 **26**	4450 **24**
3	819 **48**	1771 **47**	2737 **45**	3226 **44**	3718 **42**	4502 **41**
4	821 **65**	1787 **63**	2765 **61**	3256 **60**	3750 **58**	4533 **56**
5	808 **81**	1786 **79**	2777 **77**	3277 **76**	3778 **74**	4554 **73**
7	770 **114**	1756 **112**	2755 **109**	3255 **108**	3760 **106**	4554 **104**
9	705 **147**	1699 **145**	2710 **142**	3216 **140**	3724 **138**	4512 **137**
12	581 **197**	1582 **194**	2595 **191**	3103 **189**	3617 **186**	4378 **183**
15	400 **247**	1409 **243**	2437 **239**	2949 **237**	3466 **235**	4232 **230**
20	64 **329**	1052 **325**	2067 **321**	2580 **319**	3100 **316**	3828 **311**

TORQUE (LB IN) 4554
SPEED (RPM) 104

■ Cont. □ Int.

Intermittent operation rating applies to 10% of every minute.

Fonctionnement interm. 10% max. de chaque minute d`utilisation.

Performance data based on testing using 10W40 oil with a viscosity of 200 SUS at 54° C (130° F.). Performance data is typical. Actual data may vary slightly from one production motor to another.

Les donnees sur les performances sont basees sur des tests utilisant de l'huile 10W40 d'une viscosite de 200 SUS a 54°C (130°F). Ces donnees correspondent a des situations typiques. Les donnees reelles peuvent varier legerement d'un moteur de production a l'autre.

Intermittierende Werte maximal 10% von jeder Betriebsminute.

Capacidad de funcionamiento intermitente valida para 6 segundos por cada minuto.

Leistungsdaten sind gemessen mit SAE 10W40 bei einer Viskositaet von 43,1 Cst bei 54°C. Geringfuegige Abweichungen von den Katalogdaten sind moeglich.

Datos tecnicos obtenidos con aceite 10W40 de 200 SUS de viscosidad a 54°C (130°F). Los datos proporcionados son valores tipcos. Los valores exactos reales podrian tener una pequena variacion entre distintos motores.

⚠ **WARNING**
This product can expose you to chemicals including lead and DEHP, which are known to the State of California to cause cancer, and birth defects or other reproductive harm. For more information go to www.p65warnings.ca.gov

Tel: +45 63 12 83 00 | Email: ps@hymatik.com | www.hymatik.com | Hvidkaervej 27a, DK-5250 Odense SV, Denmark

TJ 0260

15.9 cu in / rev

Flow (GPM)	PRESSURE (PSID) 500	1000	1500	1650	2250
.5	908 **7**	1961 **6**	3048 **6**	3380 **6**	4643 **5**
1	938 **14**	2006 **13**	3099 **13**	3433 **12**	4674 **11**
2	971 **28**	2059 **27**	3165 **26**	3501 **26**	4758 **23**
3	968 **43**	2065 **42**	3177 **40**	3514 **39**	4800 **38**
4	970 **57**	2081 **56**	3203 **54**	3541 **53**	4742 **50**
5	957 **71**	2084 **70**	3219 **68**	3561 **67**	4874 **64**
7	907 **100**	2049 **98**	3198 **96**	3542 **95**	4842 **91**
9	837 **129**	1985 **127**	3143 **124**	3489 **123**	4790 **117**
12	692 **172**	1844 **169**	3016 **166**	3367 **164**	4685 **157**
15	489 **215**	1647 **212**	2830 **208**	3188 **206**	4485 **200**
20	129 **287**	1255 **283**	2418 **279**	2773 **277**	4034 **270**

TORQUE (LB IN) 4842
SPEED (RPM) 91

TJ 0295

17.9 cu in / rev

Flow (GPM)	PRESSURE (PSID) 500	1000	1500	1550	2100
.5	1014 **6**	2216 **5**	3453 **4**	3576 **4**	4907 **3**
1	1051 **12**	2270 **11**	3509 **10**	3633 **10**	4943 **8**
2	1088 **25**	2334 **24**	3600 **22**	3727 **22**	5073 **21**
3	1085 **38**	2338 **36**	3611 **35**	3739 **34**	5133 **33**
4	1085 **50**	2353 **49**	3639 **47**	3769 **47**	5156 **44**
5	1072 **63**	2352 **62**	3654 **60**	3784 **59**	5180 **57**
7	1019 **89**	2311 **87**	3624 **85**	3755 **84**	5157 **80**
9	939 **115**	2237 **113**	3561 **110**	3693 **110**	5085 **104**
12	776 **153**	2074 **151**	3403 **148**	3537 **147**	4931 **142**
15	545 **192**	1853 **189**	3184 **186**	3319 **185**	4694 **180**
20	126 **256**	1408 **253**	2697 **249**	2826 **249**	4089 **243**

TORQUE (LB IN) 5157
SPEED (RPM) 80

☐ Cont. ☐ Int.

Intermittent operation rating applies to 10% of every minute.

Fonctionnement interm. 10% max. de chaque minute d`utilisation.

Performance data based on testing using 10W40 oil with a viscosity of 200 SUS at 54° C (130° F.). Performance data is typical. Actual data may vary slightly from one production motor to another.

Les donnees sur les performances sont basees sur des tests utilisant de l'huile 10W40 d'une viscosite de 200 SUS a 54°C (130°F). Ces donnees correspondent a des situations typiques. Les donnees reelles peuvent varier legerement d'un moteur de production a l'autre.

Intermittierende Werte maximal 10% von jeder Betriebsminute.

Capacidad de funcionamiento intermitente valida para 6 segundos por cada minuto.

Leistungsdaten sind gemessen mit SAE 10W40 bei einer Viskositaet von 43,1 Cst bei 54°C. Geringfuegige Abweichungen von den Katalogdaten sind moeglich.

Datos tecnicos obtenidos con aceite 10W40 de 200 SUS de viscosidad a 54°C (130°F). Los datos proporcionados son valores tipcos. Los valores exactos reales podrian tener una pequena variacion entre distintos motores.

⚠ **WARNING**
This product can expose you to chemicals including lead and DEHP, which are known to the State of California to cause cancer, and birth defects or other reproductive harm. For more information go to www.p65warnings.ca.gov

Tel: +45 63 12 83 00 | Email: ps@hymatik.com | www.hymatik.com | Hvidkaervej 27a, DK-5250 Odense SV, Denmark

TJ 0330 — 20.0 cu in / rev

PRESSURE (PSID)

Flow (GPM)	500	1000	1500	1950
.5	1184 **5**	2507 **5**	3722 **4**	5051 **2.8**
1	1218 **11**	2558 **10**	3772 **9**	5110 **7.9**
2	1258 **22**	2632 **21**	3867 **20**	5204 **18.6**
3	1251 **34**	2633 **32**	3879 **31**	5275 **29.9**
4	1249 **45**	2649 **44**	3909 **42**	5311 **39.9**
5	1229 **57**	2648 **55**	3926 **53**	5323 **50**
7	1162 **80**	2600 **78**	3898 **75**	5311 **71**
9	1064 **103**	2518 **100**	3829 **98**	5228 **93**
12	875 **137**	2333 **135**	3657 **131**	5027 **127**
15	621 **171**	2081 **169**	3420 **165**	4779 **160**
20	163 **229**	1576 **226**	2875 **222**	4140 **214**

TORQUE (LB IN) 5311
SPEED (RPM) 71

TJ 0365 — 22.6 cu in / rev

PRESSURE (PSID)

Flow (GPM)	500	1000	1325	1825
.5	1393 **5**	2942 **4**	3974 **4**	5557 **3**
1	1444 **10**	3005 **9**	4036 **8**	5595 **7**
2	1494 **20**	3090 **19**	4131 **18**	5671 **17**
3	1485 **30**	3082 **29**	4125 **28**	5722 **27**
4	1477 **40**	3089 **39**	4139 **37**	5734 **36**
5	1452 **50**	3075 **49**	4130 **47**	5734 **45**
7	1371 **70**	3009 **69**	4071 **67**	5671 **63**
9	1260 **90**	2899 **89**	3669 **87**	5532 **84**
12	1002 **121**	2658 **119**	3737 **117**	5266 **113**
15	700 **151**	2355 **149**	3432 **146**	4937 **142**
20	152 **201**	1776 **199**	2838 **196**	4228 **191**

TORQUE (LB IN) 5671
SPEED (RPM) 63

■ Cont. □ Int.

Intermittent operation rating applies to 10% of every minute.

Fonctionnement interm. 10% max. de chaque minute d`utilisation.

Performance data based on testing using 10W40 oil with a viscosity of 200 SUS at 54° C (130° F.). Performance data is typical. Actual data may vary slightly from one production motor to another.

Les donnees sur les performances sont basees sur des tests utilisant de l'huile 10W40 d'une viscosite de 200 SUS a 54°C (130°F). Ces donnees correspondent a des situations typiques. Les donnees reelles peuvent varier legerement d'un moteur de production a l'autre.

Intermittierende Werte maximal 10% von jeder Betriebsminute.

Capacidad de funcionamiento intermitente valida para 6 segundos por cada minuto.

Leistungsdaten sind gemessen mit SAE 10W40 bei einer Viskositaet von 43,1 Cst bei 54°C. Geringfuegige Abweichungen von den Katalogdaten sind moeglich.

Datos tecnicos obtenidos con aceite 10W40 de 200 SUS de viscosidad a 54°C (130°F). Los datos proporcionados son valores tipcos. Los valores exactos reales podrian tener una pequena variacion entre distintos motores.

WARNING
This product can expose you to chemicals including lead and DEHP, which are known to the State of California to cause cancer, and birth defects or other reproductive harm. For more information go to www.p65warnings.ca.gov

Tel: +45 63 12 83 00 | Email: ps@hymatik.com | www.hymatik.com | Hvidkaervej 27a, DK-5250 Odense SV, Denmark

TJ 0390 **24.0** cu in / rev

PRESSURE (PSID)

Flow (GPM)	500	1000	1250	1750
.5	1326 **4**	2889 **3**	3682 **2**	5235 **2**
1	1380 **9**	2934 **7**	3724 **7**	5296 **6**
2	1443 **18**	3034 **17**	3840 **15**	5383 **13**
3	1442 **28**	3049 **26**	3861 **25**	5457 **22**
4	1454 **37**	3084 **36**	3905 **34**	5531 **32**
5	1447 **47**	3104 **45**	3935 **44**	5543 **40**
7	1393 **66**	3080 **64**	3923 **62**	5568 **60**
9	1297 **85**	3013 **83**	3868 **81**	5494 **79**
12	1088 **114**	2818 **112**	3686 **110**	5296 **106**
15	797 **143**	2539 **140**	3414 **138**	5000 **135**
20	264 **191**	2006 **188**	2880 **186**	4358 **182**

TORQUE (LB IN) 5568
SPEED (RPM) 60

☒ Cont. ☐ Int.

Intermittent operation rating applies to 10% of every minute.

Fonctionnement interm. 10% max. de chaque minute d'utilisation.

Performance data based on testing using 10W40 oil with a viscosity of 200 SUS at 54° C (130° F.). Performance data is typical. Actual data may vary slightly from one production motor to another.

Les donnees sur les performances sont basees sur des tests utilisant de l'huile 10W40 d'une viscosite de 200 SUS a 54°C (130°F). Ces donnees correspondent a des situations typiques. Les donnees reelles peuvent varier legerement d'un moteur de production a l'autre.

Intermittierende Werte maximal 10% von jeder Betriebsminute.

Capacidad de funcionamiento intermitente valida para 6 segundos por cada minuto.

Leistungsdaten sind gemessen mit SAE 10W40 bei einer Viskositaet von 43,1 Cst bei 54°C. Geringfuegige Abweichungen von den Katalogdaten sind moeglich.

Datos tecnicos obtenidos con aceite 10W40 de 200 SUS de viscosidad a 54°C (130°F). Los datos proporcionados son valores tipcos. Los valores exactos reales podrian tener una pequena variacion entre distintos motores.

⚠ WARNING
This product can expose you to chemicals including lead and DEHP, which are known to the State of California to cause cancer, and birth defects or other reproductive harm. For more information go to www.p65warnings.ca.gov

Tel: +45 63 12 83 00 | Email: ps@hymatik.com | www.hymatik.com | Hvidkaervej 27a, DK-5250 Odense SV, Denmark

Wheel Mount / Radnabengehaeuse
Monture à roue / Montaje de rueda

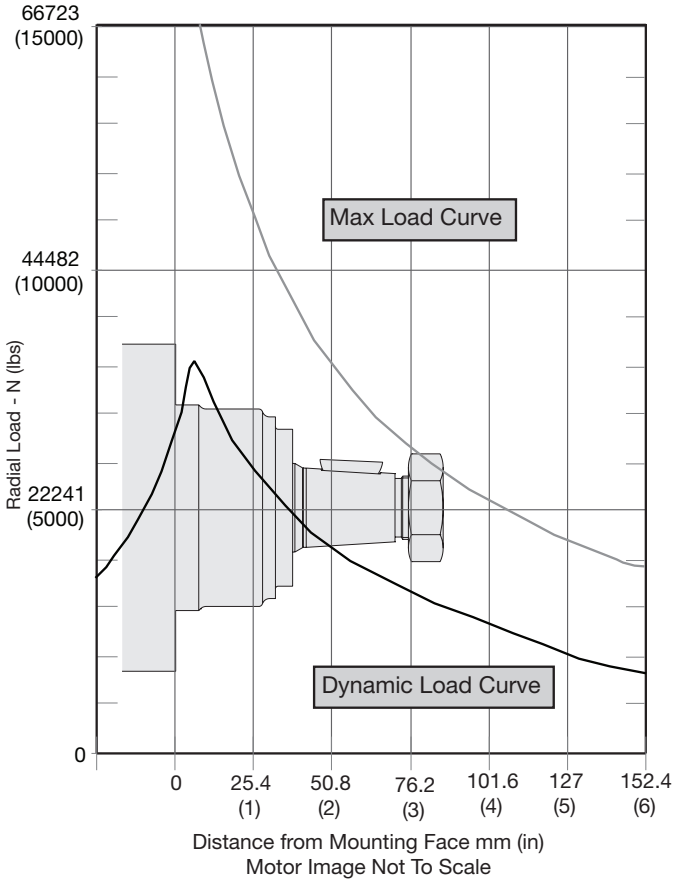

The maximum load curve is defined by bearing static load capacity. This curve should not be exceeded at any time including shock loads.

Die maximale radiale Wellenbelastungskurve ist definiert als maximale statische Last ohne Drehzahl. Sie gilt als Grenze und sollte keinesfalls überschritten werden.

La courbe de charge maximale est définie par la capacité de charge statique portante. Cette courbe ne devrait être dépassée en aucun moment y compris pour les charges par à-coups.

La curva de carga máxima queda definida por la capacidad de carga estática del cojinete. No se deben superar los valores de esta curva, ni siquiera con cargas provisorias de impacto.

The dynamic side load curve is based on unidirectional steady state loads for L_{10} bearing life at 3 x 10^6 revolutions.

Die zulässige auslegbare radiale Wellenbelastungskurve ist unter ruhenden, einseitig statisch gerichteten Lastverhältnissen auf eine L_{10} Lebensdauer mit 3 x 10^6 Umdrehungen kalkuliert.

La courbe de charge latérale permise se base sur des charges unidirectionnelles en régime permanent pour le roulement L_{10} à 3 x 10^6 révolutions.

La curva de valores admisibles de carga lateral está basada en cargas constantes para cojinetes L_{10} a 3 x 10^6 revoluciones.

Equation to Calculate the Expected Radial Bearing Life
Gelichung zur Ermittlung der Lagerlebensdauer

Equation to calculate the dynamic bearing life for a given load:
Bestimmung der erlaubten radialen Wellenbelastung mit vorgegebener Last

Use F_a, F_b and S in equation to determine hours of L_{10} bearing life.
Die Lebensdauer in Stunden ergibt sich durch einsetzen von F_a, F_b, und S in die nachstehende Formel.

$$L = \frac{3 \times 10^6}{60 \times S} \left\{\frac{F_a}{F_b}\right\}^{3.33}$$

Where / Mit:

S = Shaft Speed RPM / Abtriebswellendrehzahl in min^{-1}
L = Life In Hours / Lebensdauer in Stunden
F_a = Dynamic side load defined by above curve at a distance from mounting flange. / Erlaubte radiale Wellenbelastung als Function der Laenge
F_b = Application side load. / Anwendungsseitige Wellenbelastung

Note: Calculations are based on L_{10} bearing life per ISO 281.
Auslegung basiert auf einer L_{10} Lenbendauer nach ISO 281

005 TJ.indd, b

WARNING
This product can expose you to chemicals including lead and DEHP, which are known to the State of California to cause cancer, and birth defects or other reproductive harm. For more information go to www.p65warnings.ca.gov

Tel: +45 63 12 83 00 | Email: ps@hymatik.com | www.hymatik.com | Hvidkaervej 27a, DK-5250 Odense SV, Denmark

Code: US

Wheel Mount, 7/8-14 SAE O-Ring

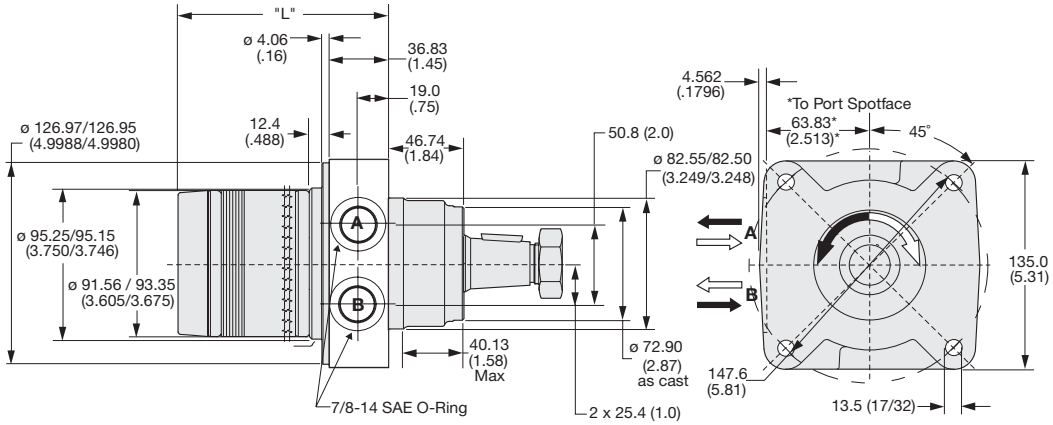

Code US disp.	0036	0045	0050	0065	0080	0100	0130	0165	0195	0230	0260	0295	0330	0365	0390
Weight/Gewicht kg	**6.67**	**6.80**	**6.90**	**7.00**	**7.10**	**7.20**	**7.60**	**7.80**	**8.10**	**8.30**	**8.60**	**8.80**	**9.10**	**9.40**	**9.60**
Poids/Peso (lb)	(14.7)	(15.0)	(15.2)	(15.4)	(15.6)	(15.8)	(16.7)	(17.2)	(17.9)	(18.3)	(19.0)	(19.4)	(20.0)	(20.7)	(21.2)
Length "L" mm	**105.8**	**106.9**	**108.4**	**111.5**	**114.7**	**117.8**	**124.3**	**130.6**	**137.0**	**143.3**	**149.7**	**156.0**	**162.4**	**171.0**	**175.1**
"L" (in)	(4.17)	(4.21)	(4.27)	(4.39)	(4.52)	(4.64)	(4.89)	(5.14)	(5.39)	(5.64)	(5.89)	(6.14)	(6.39)	(6.73)	(6.89)

English equivalents for metric specifications are shown in ( ).

WARNING
This product can expose you to chemicals including lead and DEHP, which are known to the State of California to cause cancer, and birth defects or other reproductive harm. For more information go to www.p65warnings.ca.gov

Tel: +45 63 12 83 00 | Email: ps@hymatik.com | www.hymatik.com | Hvidkaervej 27a, DK-5250 Odense SV, Denmark

Code U

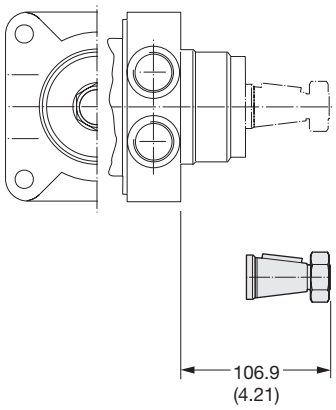

Code: 08

1 1/4" Tapered

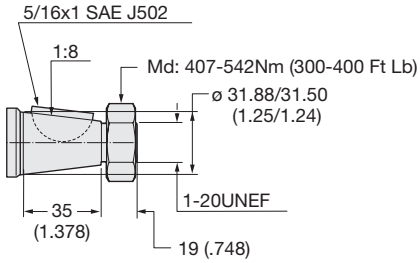

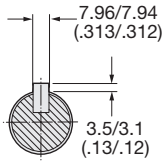

English equivalents for metric specifications are shown in ( ).

WARNING
This product can expose you to chemicals including lead and DEHP, which are known to the State of California to cause cancer, and birth defects or other reproductive harm. For more information go to www.p65warnings.ca.gov

Tel: +45 63 12 83 00 | Email: ps@hymatik.com | www.hymatik.com | Hvidkaervej 27a, DK-5250 Odense SV, Denmark

Availability / Verfugbarkeit				Code		
				Painted	Unpainted	Description / Beschreibung
TC	TB	TE	TJ	Lackiert	UnLackiert	Description / Beschreibung
x	x	x	x	AAAA	AAAB	Standard seals
x	x[7]	x[7]		AAJV	AANC	Bidirectional shuttle 3:30
				AABT	-	No nut
x	x[7]	x[7]	x	BBDF	BBDM	53 Bar (761 PSI) Internal Bidirectional Relief
x	x[7]	x[7]	x	BBCV	-	64 Bar (921 PSI) Internal Bidirectional Relief
x				-	BBCE	83 Bar (1200 PSI) Internal Bidirectional Relief, Flourocarbon (Viton) shaft seals
x[3]	x[7]		x	BBCR	BBCP	100 Bar (1450 PSI) Internal Bidirectional Relief
x[3]	x[7]	x[7]	x	-	BBCT	108 Bar (1560 PSI) Internal Bidirectional Relief
x		x		AAAC	-	Double Paint / Zweischichten – Lackierung
	x[6]	x[6]	x	AAAF	AABP	Castle Nut / Kronenmutter
x	x	x	x	AAAG	AAAH	Fluorocarbon Seals / Fluorocarbon Dichtungen
x	x	x	x	AAAJ	AAFG	High Temperature Commutator Seal / Kommutatordichtung fuer hohe Temperaturen
x[1]	x[1]	x[1]	x[1]	AABJ	AABK	Free Running Rotorset / Leichtläufer-Rotorsatz
	x[1]	x[1]		AABL	AABM	Free Running Rotorset, No Commutator Seal
	x	x	x	AAFW	AAFA	High Temperature Commutator Seals, Fluorocarbon Seals
			x	AAFB	AANG	High Temperature Commutator Seal, Castle Nut
				AAPL	-	Fluorocarbon Seals, Castle Nut, Black Paint
x				AAUA	-	Double Paint, Free Running Rotorset
				-	AAXD	Fluorocarbon Seals, No Commutator Seal, No Paint
	x	x		FSAA	FSAB	Speed Sensor / Drehzahl-Sensor
	x[5,7]	x[2]	x[2]	BBFZ	BBCN	140 Bar (2030 PSI) Internal Bidirectional Relief / Internes Schockventil
x[4]	x[2,7]	x[7]	x	BBDY	BBCK	120 Bar (1740 PSI) Internal Bidirectional Relief Internes Schockventit
x[2]	x[7]	x[7]	x	BBGA	BBCM	83 Bar (1200 PSI) Internal Bidirectional Relief / Internes Schockventil
	x[8]	x[8]		HAAA	HAAB	Adjustable external Relief Valve / Schockventil (einstellbar)
	x	x		-	AAUY	Nickel Plated Except Shaft
Consult factory for other positions and combinations. / Weitere Optionen nach Rücksprache verfügbar						

[1] Not applicable to 0365 or 0390 displacements
[2] Not available in 0330, 0365 or 0390 displacements
[3] Not available in 0260, 0295, 0330, 0365 or 0390 displacements
[4] Not available in 0230, 0260, 0295, 0330, 0365 or 0390 displacements
[5] Not available with 0230, 0295, 0330, 0365 or 0390 displacements
[6] Only available with 25 shaft
[7] Not available with R or Y ports
[8] Only available with M ports

Code: AAAA
Black Paint

Code: AAAB
No Paint

Code: AAAC
Double Paint — Base coat of red oxine primer and finish coat of black paint for increased corrosion resistance.

Code AAAF* or AABP
Castle Nut — All motors ordered with Tapered shafts are equipped with patch locking nuts. If desired, a castle nut may be specified.

Code: AAAJ* or AAFG
High Temperature Commutator Seal — Under conditions of high temperature, it is suggested that a high temperature commutator seal be used.

Code: AAAG* or AAAH
Fluorocarbon — is available under various registered trademarks, including **VITON™** (a registered trademark of DuPont), **FLUOREL™** (a registered trademark of 3M) or **FPM™** (a registered trademark of DuPont).

Code: AABJ* or AABK
Free Running Rotorset — The “free running rotorset” is a specially dimensioned rotorset that allows for smooth operation at low flows and low pressure. Volumetric efficiency can be affected.

Code: AAAA
Schwarz lackiert

Code: AAAB
No Paint

Code: AAAC
Zweischichtlackierung schwarz

Code AAAF* or AABP
Kronenmutter
Selbstsichernde Mutter wird ersetzt durch Kronenmutter

Code: AAAJ* or AAFG
Kommutatordichtung fuer hohe Temperaturen — Bei hohen Temperaturen des Hydraulikoels wird empfohlen die Kommutatordichtung fuer hohe Temperaturen einzusetzten!

Code: AAAG* or AAAH
Fluorocarbon Dichtungen
Für Anwendungen im höheren/niedrigeren Temperaturenbereich oder speziellen Flüssigkeiten wird der Einsatz von Fluorcarbon Dichtungen empfohlen. Fluorocarbon ist bekannt unter verschiedenen eingetragenen Warenzeichen
VITON™ - DuPont, Fluorel™ - 3M, FPM™ - DuPont

Code: AABJ* or AABK
Leichtläufer Rotorsatz
Anlaufdruck < 5 bar

* Option code shown is with a single black coat of paint.
* Code: Motor schwarz grundiert
* Le code d’option montré correspond à une seule couche de peinture noire.
* El código de la opción mostrado es con una sola capa de pintura negra.

WARNING
This product can expose you to chemicals including lead and DEHP, which are known to the State of California to cause cancer, and birth defects or other reproductive harm. For more information go to www.p65warnings.ca.gov

Tel: +45 63 12 83 00 | Email: ps@hymatik.com | www.hymatik.com | Hvidkaervej 27a, DK-5250 Odense SV, Denmark

Code: FSAA* or FSAB

An Economical Sensor for Speed Readout

This rugged, weather resistant design is ideal for industrial and mobile applications. Applications include salt/sand/fertilizer spreader drives, conveyer drives and injection molder compression drives. The sensor is a hall-effect type, which when externally powered outputs 30 square wave digital pulses per coupling shaft revolution. The connector is a user friendly universally available 4 pin polarized M12 connector allowing for simplified field service. The integrated design does not effect the side load capacity or performance of the torque motor.

Dieser robuste, wetterfeste Drehzahlaufnehmer arbeitet nach dem Halleffekt. Es werden 30 Rechteckimpulse pro Abtriebswellenumdrehung erzeugt. Durch Erfassung der positiven und negativen Wellenflanken sind 60 Impulse pro Umdrehung möglich. Der Sensor führt zu keiner Leistungsbeschränkung des Motors. Die volle Radiallastkapazität bleibt erhalten.

Un capteur economique pour mesure de la vitesse. Ce capteur robuste et resistant aux intemperies est a effet Hall. Alimente par une source externe, il fournit 30 ondes digitales carrees par tour. Par multiplication lelectronique on obient 60 pulsations par tour. Son montage ne modifie pas le couple ni la charge radiale du moteur qui le recoit.

Este es un diseño de construcción reforzada, apto para uso a la intemperie e ideal para uso industrial y en equipos móviles. Entre sus aplicaciones, se puede mencionar esparcidores de sal, arena o fertilizantes, unidades motoras de transportadores y unidades motoras de compresión para moldeo a inyección. El sensor es del tipo de medio efecto, que al ser excitado externamente, genera 30 pulsos digitales de onda cuadrada por cada revolución del eje del acoplamiento. Utiliza un simple conector M12 polarizado tetrapolar, que es de uso común y facilita el mantenimiento en el lugar de instalación. El diseño integrado no afecta la capacidad de carga lateral ni la potencia del motor de torque.

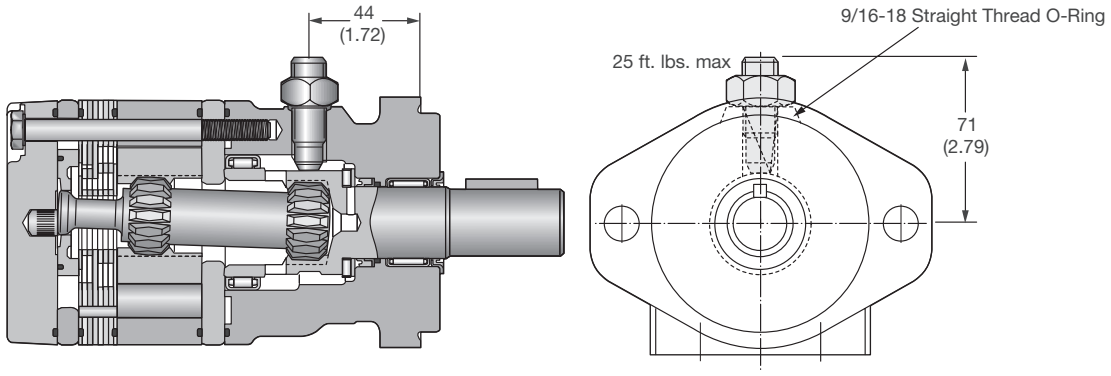

* Option code FSAA is with a single black coat of paint.
* Code FSAA: Motor schwarz grundiert
* Le code d'option montré correspond à une seule couche de peinture noire.
* El código de la opción mostrado es con una sola capa de pintura negra.

US equivalents for metric specifications are shown in ( ).

WARNING
This product can expose you to chemicals including lead and DEHP, which are known to the State of California to cause cancer, and birth defects or other reproductive harm. For more information go to www.p65warnings.ca.gov

Tel: +45 63 12 83 00 | Email: ps@hymatik.com | www.hymatik.com | Hvidkaervej 27a, DK-5250 Odense SV, Denmark

Speed Sensor / Drehzahl-Sensor
Compte-tours / Contagiri

LSHT Torqmotors™ and Nichols™ Motors
Light Duty Motors
HY13-1590-011/US,EU

Operating voltage range Versorgungsspannung Gamme de tension de service Gama de voltaje de alimentacion	4.5...24 VDC
Operating temperature Arbeitstemperatur Temperature de service Tempuratura de servicio	-20° to 220° F -29°...104° C
Operating frequency range Arbeitsfrequenz Gamme de frequences de service Gama de frecuencia de servicio	0...10 KHZ
Max sink current Erforderlicher Laststrom Courant d'affaissement maxi Corriente maxima de alimentacion	0 ... 20 mA (max.)
Connection Anschluß Branchement Conexion	4 Pin Polarized (12mm)
Sensor output Sonsorausgang Sortie du détecteur Salida del sensor	30 Pulses per revolution which can be doubled electronically 30 impulsions par revolution pouvant etre doublees electroniquement 30 pulsos por revolucion, que pueden duplicarse electronicamente
Output is NPN Ausgang is NPN La sortie est NPN La salida es NPN	Open Collector

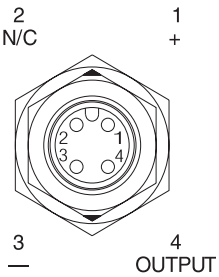

4 Pin Polarized
M12 Connector (Male)

Cable and "Pull Up" Resistor are not supplied by factory.

Zubehör wie z.B. Kabel gehören nicht zum Lieferumfang

Le câble et la résistance "Pull Up" ne sont pas fournis par l'usine.

El cable y la resistencia de arranque no se suministran originalmente de fábrica.

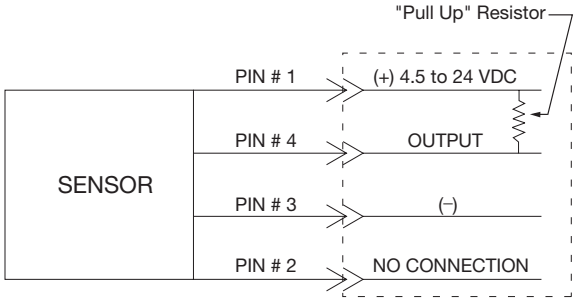

Pull-up Resistor Value Formula
Formel zur Ermittlung des Pull up-Widerstandes
Formule de la valeur de resistance Pull-up
Calculo de la resistance de carga

(0.25 Watt, 5% de tol.)
(0.25 Watt, Tol. 5%)
(0.25 Watt 5% Tol.)
(0.25 Watt, toll. 5%)

$$\frac{\text{Voltage / Spannung / Courant d'affaissement / Voltaje: } 4.5...24\ \text{VDC}}{\text{Sink Current / Laststrom / Resistance / Corriente de alimentacion: } 0...20\ \text{mA}} = \text{Resistor / Widerstand / Resistance / Resistencia (k Ohm)}$$

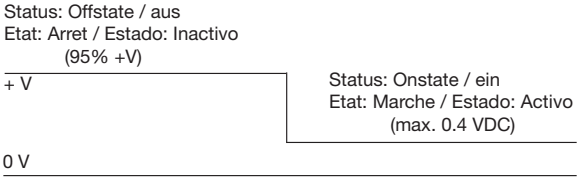

WARNING
This product can expose you to chemicals including lead and DEHP, which are known to the State of California to cause cancer, and birth defects or other reproductive harm. For more information go to www.p65warnings.ca.gov

Tel: +45 63 12 83 00 | Email: ps@hymatik.com | www.hymatik.com | Hvidkaervej 27a, DK-5250 Odense SV, Denmark

Code: AANC or AAJV*

A Hot Oil Shuttle is used to continuously remove a portion of the fluid in a closed loop transmission or other closed loop system. At 125 PSI pressure differential between the motor return port and the shuttle outlet, 1.5 GPM will exit the circuit to cool, filter and return to the reservoir. The constant loop replenishment helps to keep heat and contamination from building up in the circuit.

Spülventil für geschlossene Systeme zur Rückführung einer definierten Menge des Niederdrucköls in den Tank zur Abkühlung innerhalb desselben Kreislaufs.

Valve de rincage pour systèmes fermès pour le retour d`un volume dèterminè de fluide basse pression vers le rèservoir, un refroidisseur ou un filtre de rèfrigèration, dans le même circuit.

Un transferidor de aceite caliente actúa permanentemente para extraer una parte del fluido en una transmisión de circuito cerrado u otro sistema de circuito cerrado. Entre la entrada de retorno del motor y la salida del transferidor hay una diferencia de presión de 125 psi (libras/pulg.²), y a esta presión salen 1,5 galones por minuto del circuito para enfriarse, filtrarse y volver al depósito de fluido. El reacondicionamiento permanente de parte del fluido evita la contaminación del mismo y el incremento de temperatura en el circuito.

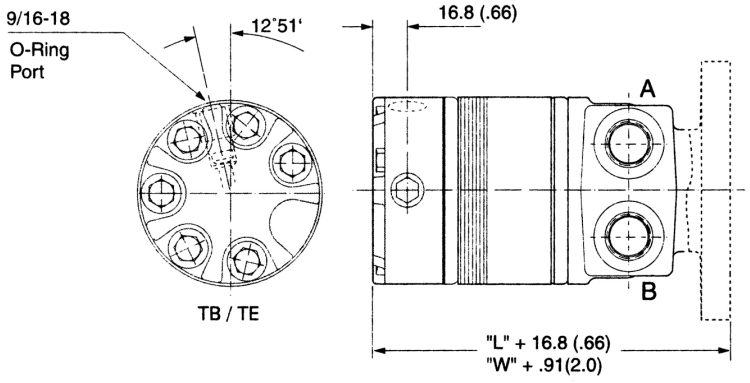

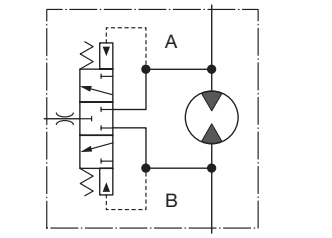

Q=5 l (Q=1.32 gal) p=9 bar (p=131 psi) ϑ=39 cSt (ϑ=190 SUS)

* Option code AAJV is with a single black coat of paint
* Code AAJV: Motor schwarz grundiert
* Le code d'option moneté correspond à une seule couche de peinture noire
* El código de la opción mostrado es con una sola capa de pintura negra

English equivalents for metric specifications are shown in ( ).

WARNING
This product can expose you to chemicals including lead and DEHP, which are known to the State of California to cause cancer, and birth defects or other reproductive harm. For more information go to www.p65warnings.ca.gov

Tel: +45 63 12 83 00 | Email: ps@hymatik.com | www.hymatik.com | Hvidkaervej 27a, DK-5250 Odense SV, Denmark

Crossover relief valve / Schockventil
Valve anti-choc / Vavola di soprapressione

LSHT Torqmotors™ and Nichols™ Motors
Light Duty Motors

HY13-1590-011/US,EU

Code: HAAA* or HAAB

Specifications

- **Rated flow** — 20 gpm
- **Max. Operating Pressure** — adjustable up to 3500 psi, factory preset at 1750 psi.
- **Reseat Pressure** — 90% of set pressure
- **Operating Temperature Range:** -40°F to 250°F
- **Cartridge Material** — All parts steel. All operating parts hardened steel.
- **Body Material** — Steel

Einsatzdaten

- Max. Fluß 76l/min.
- Max. Druck 240 bar (Voreinstellung 120 bar)
- Hysterese 90% des Öffnungsdrucks
- Betriebstemperatur – 40°C bis 115°C
- Ventil in Stahlausführung
- Code für Ausführung schwarz grundiert

Spécifications

- **Débit nominal** – 75,7 litres/minute (20 gallons/minute)
- **Pressure de service maximale** – ajustable jusqu'à 246 kg/cm² (3 500 ppo²), préréglée à l'usine à 123 kg/cm² (1 750 ppo²).
- **Pression de rajustage** – 90% de la pression de consigne
- **Gamme des températures de service** – de – 40° C à 121° C (-40° F à 250° F).
- **Matériau de la cartouche** – Entièrement en acier. Toutes les pièces de service en acier durci.
- **Matériau du corps** – Acier

Especificaciones técnicas

- **Caudal:** 20 galones/minuto
- **Presión máxima de servicio:** regulable hasta 3.500 libras/pulg.². Regulada de fábrica a 1.750 libras/pulg.².
- **Presión de reasentamiento:** 90% de la presión calibrada.
- **Gama de temperatura de servicio:** - 40° F a 250° F
- **Material del cartucho:** todas las partes son de acero. Todas las partes activas son de acero templado.
- **Material del cuerpo:** acero

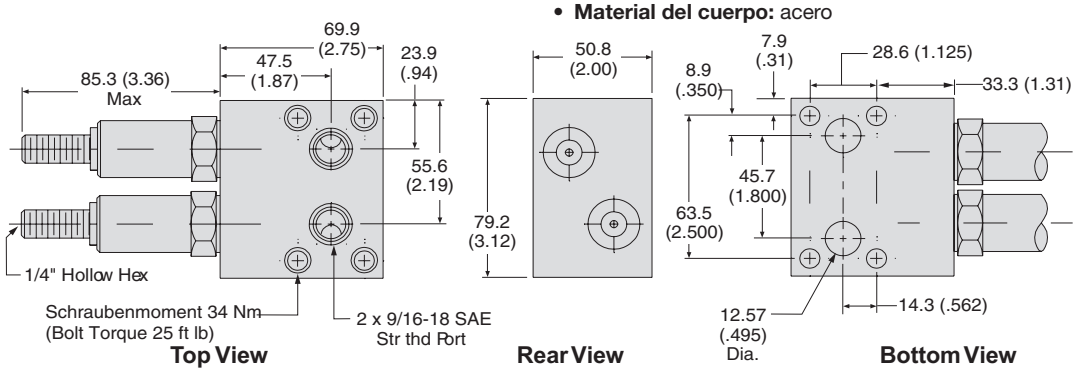

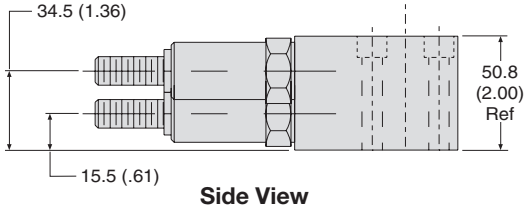

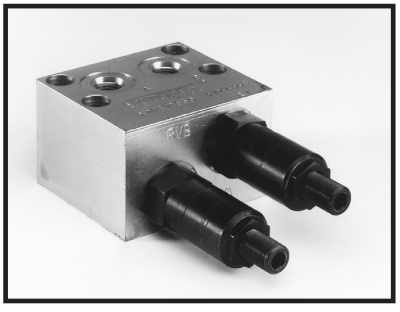

Performance Curve

Flow vs. Pressure

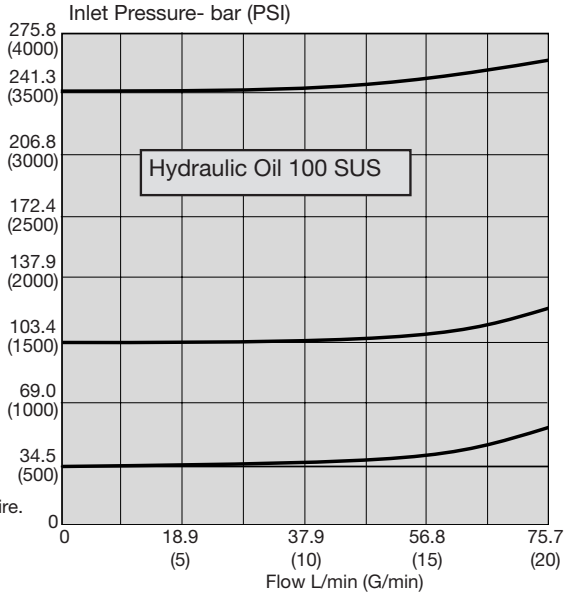

* Option code shown is with a single black coat of paint.
* Motor schwarz grundiert
* Le code d'option montré correspond à une seule couche de peinture noire.
* El código de la opción mostrado es con una sola capa de pintura negra.

English equivalents for metric dimensions are shown in ( ).

WARNING
This product can expose you to chemicals including lead and DEHP, which are known to the State of California to cause cancer, and birth defects or other reproductive harm. For more information go to www.p65warnings.ca.gov

Parker Hannifin Corporation
Pump & Motor Division
Greeneville, Tennessee, USA

Tel: +45 63 12 83 00 | Email: ps@hymatik.com | www.hymatik.com | Hvidkaervej 27a, DK-5250 Odense SV, Denmark

Code: Bidirectional Relief Valves

This integrated internal relief valve is used for fixed pressure settings.
Internes Schockventil mit festen Einstelldrucken
La soupape de sécurité interne s'utilise pour des valeurs de pression fixes.
La valvula interna de alivio se utiliza para cablibraciones fijas de presion.

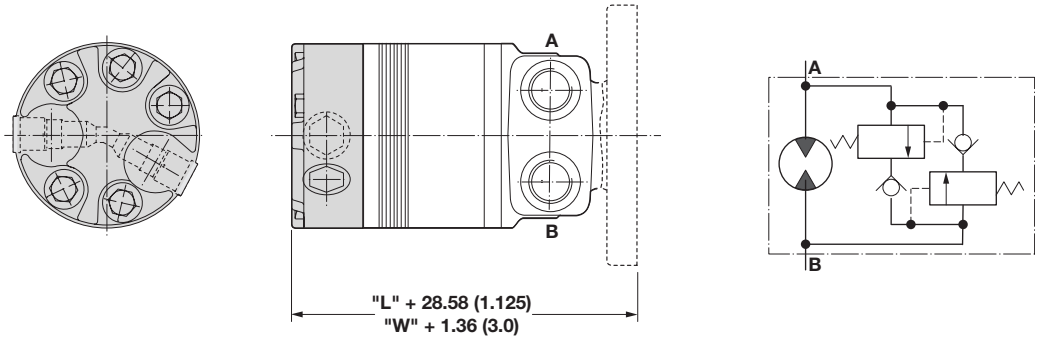

Code	Description	TC	TB	TE	TJ
BBCM	83 Bar / 1200 PSI Int Bidirectional Relief, No paint	x[2]	x[7]	x[7]	x
BBCN	140 Bar / 2030 PSI Int Bidirectional Relief, No paint		x[7]	x[2]	x[2]
BBCP	100 Bar / 1450 PSI Int Bidirectional Relief, No paint	x[3]	x[7]	x[7]	x
BBCR	100 Bar / 1450 PSI Int Bidirectional Relief, Black paint	x[3]	x[7]	x[7]	x
BBCT	108 Bar / 1560 PSI Int Bidirectional Relief, No paint	x[3]	x[1,7]	x[7]	x
BBCV	64 Bar / 921 PSI Int Bidirectional Relief, Black paint	x	x[7]	x[7]	x
BBCK	120 Bar / 1740 PSI Int Bidirectional Relief, No paint	x[4]	x[2,7]	x[7]	x
BBCE	83 Bar / 1200 PSI Int Bidirectional Relief, Flourocarbon (Viton) Seals, No Paint				
BBDE	150 Bar / 2175 PSI Int Bidirectional Relief, Flourocarbon (Viton) Seals, No paint				
BBDF	53 Bar / 761 PSI Int Bidirectional Relief, Black paint	x	x[7]	x[7]	x
BBDM	53 Bar / 761 PSI Int Bidirectional Relief, No paint	x	x[7]	x[7]	x
BBDT	150 Bar / 2175 PSI Int Bidirectional Relief, No paint				
BBDY	120 Bar / 1740 PSI Int Bidirectional Relief, Black paint	x[4]	x[5,7]	x[7]	x
BBGA	83 Bar / 1200 PSI Bar Int Bidirectional Relief, Black Paint	x[2]	x[7]	x[7]	x
BBFZ	140 Bar / 2030 PSI Bar Int Bidirectional Relief, Black Paint		x[5,7]	x[2]	x[2]

[1] Not applicable to 0365 or 0390 displacements - Nicht verfugbar fur 0365 und 0390
[2] Not available in 0330, 0365 or 0390 displacements
[3] Not available in 0260, 0295, 0330, 0365 or 0390 displacements
[4] Not available in 0230, 0260, 0295, 0330, 0365 or 0390 displacements
[5] Not available with 0230, 0295, 0330, 0365 or 0390 displacements
[6] Only available with 25 shaft
[7] Not available with R or Y ports
[8] Only available with M ports

Standard Length & Weights for TB Series on Pages 36-43 and TE Series on Pages 76-81.
Längen/Gewichte TB Serie siehe Seiten 36-43, TE Serie Seiten 76-81.
Longueurs et poids courants pour la série TB, voir les pages 36-43, et la série E, voir les pages 76-81.
Los valores estándar de longitud y peso de la Serie TB se puede ver en las Páginas 36-43, y de la Serie E en las Páginas 76-81.

English equivalents for metric specifications are shown in ( ).

WARNING
This product can expose you to chemicals including lead and DEHP, which are known to the State of California to cause cancer, and birth defects or other reproductive harm. For more information go to www.p65warnings.ca.gov

Tel: +45 63 12 83 00 | Email: ps@hymatik.com | www.hymatik.com | Hvidkaervej 27a, DK-5250 Odense SV, Denmark

WARNING
This product can expose you to chemicals including lead and DEHP, which are known to the State of California to cause cancer, and birth defects or other reproductive harm. For more information go to www.p65warnings.ca.gov

Tel: +45 63 12 83 00 | Email: ps@hymatik.com | www.hymatik.com | Hvidkaervej 27a, DK-5250 Odense SV, Denmark

Technical Information /Technische Information / Segni/Informacion Tecnica

LSHT Torqmotors™ and Nichols™ Motors
TF Series / Serie / Série HY13-1590-011/US,EU

11 Displacements **11 Schluckvolumen** **11 Cylindrée** **11 Despazamientos**		(4.9 - 29.1 in³/rev) **81 . . . 477 cm³/rev**
	Cont.	**Int.**
Maximum Pressure **Eingangsdruck** **Pression entrée** **Presion Maxima**	(3000 psid) **. . . 207 bar**	(4000 psid) **. . . 276 bar**
Maximum Oil Flow **Schluckstrom** **Débit d'huile** **Caudal Maximo de Aceite**		(25 gpm) **. . . 95 lpm**
Maximum Speed **Drehzahl** **Vitesse de rotation** **Velocidad Maxima**		(749 rpm) **749 rpm**
	Cont.	**Int.**
Maximum Torque **MaxDrehmoment** **Couple** **Torque Maximo**	(6027 lb in) **681 Nm**	(8106 lb in) **916 Nm**
Maximum Side Load at Key **Seitenlast** **Charges latèrales** **Carga Maxima Lateral**		(3597 lb) **. . . 16000 N**

A Tough Motor for Tough Applications

Sturdy construction throughout makes Parker's TF Series motors suitable for the most severe applications. The powertrain uses unique 60:40 spline geometry for strength. All splines are constantly flushed with cool fluid for durability. Roller vanes and sealed commutation assure high volumetric efficiency, smooth low speed operation and extended life. Shaft seals can withstand full system pressure and are washed in cool fluid for long life.

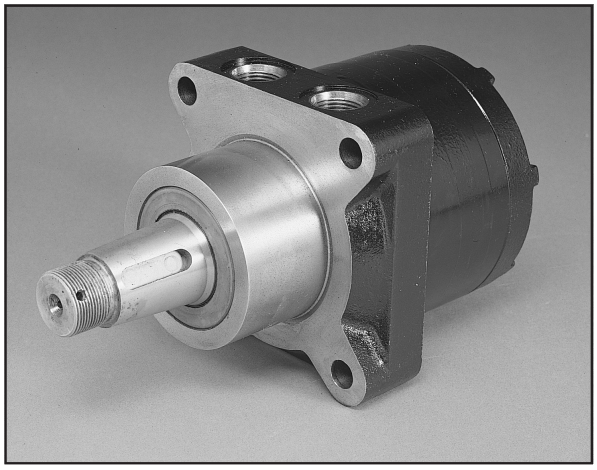

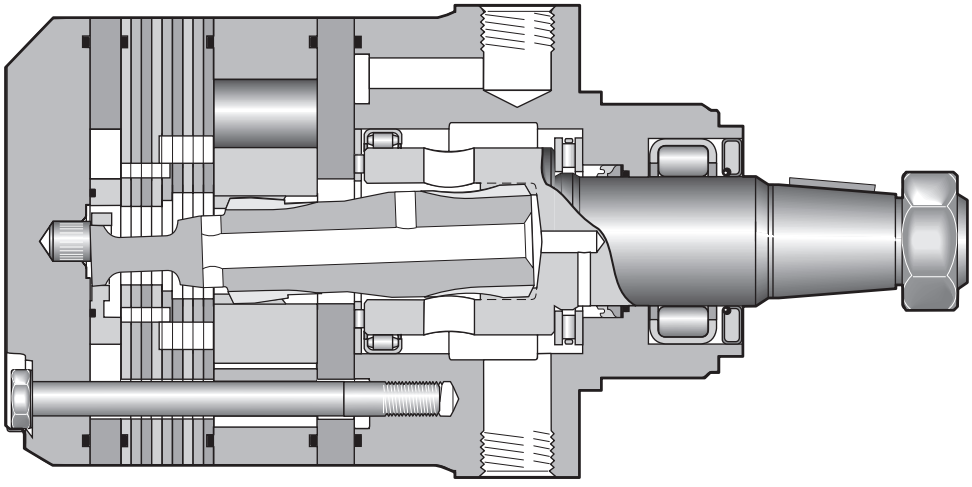

007 TF.indd, b

⚠ **WARNING**
This product can expose you to chemicals including lead and DEHP, which are known to the State of California to cause cancer, and birth defects or other reproductive harm. For more information go to www.p65warnings.ca.gov

Ordering Information / Bestellschlüssel
System de Commande / Imformacion para pedidos

LSHT Torqmotors™ and Nichols™ Motors
TF Series / Serie / Série HY13-1590-011/US,EU

TF
Series

XXXX
Displacement
Schluckvolumen
Cylindrée
Desplazamiento

Code	cm³/U cm³/tr cm³/giro	in³/rev
0080	81	4.9
0100	100	6.1
0130	128	7.8
0140	141	8.6
0170	169	10.3
0195	197	11.9
0240	238	14.5
0280	280	17.1
0360	364	22.2
0405	405	24.7
0475	477	29.1

XX
Mounting/Ports
Gehäuse/Anschluß
Carter/Plan de raccordement
Montaje/Lumbreras

Code	Mounting/Ports
AS	SAE "A" 2 Bolt, 7/8-14 SAE
LS	Wheel, Front Brake Nose, 7/8-14 SAE
MS	Magneto, 7/8-14 SAE
UB	Wheel, Standard 7/8-14 SAE O-Ring; Rear Radial
US	Wheel, Standard, 7/8-14 SAE
ZS	Magneto, O Ring Pilot, 7/8-14 SAE
Custom Order	
AB	SAE "A" 2 Bolt 7/8-14 SAE O-Ring; Rear Radial
AE	SAE "A" 2 Bolt, Manifold; Rear Radial
AM	SAE "A" 2 Bolt, 5/16-18 UNC Manifold
BS	SAE "B" 2 Bolt, 7/8-14 SAE
ES	Modified SAE A 6 Bolt, 7/8-14 SAE
KS	Wheel Front Brake Nose, 1/2-13 UNC Mounting Holes, 7/8-14 SAE
MA	Magneto 7/8-14 SAE O-Ring; Rear Axial
MB	Standard Mount "A", 4-Bolt, Rear Port, 7/8 O-ring (SAE # 10) Rear Radial
MM	Magneto, 5/16-18 UNC Manifold
UJ	Large Wheel Mt., 9/16 O-ring
WB	Wheel, Optional 7/8-14 SAE O-Ring; Rear Radial
WE	Wheel, Optional, Manifold; Rear Radial

XX
Shaft
Welle
Arbre
Eje

Code	Shaft
01*	1" 6B Spline
02*	1" Keyed
03	1 1/4" Keyed
05	1 1/4" 14 Tooth Spline
06	19 Tooth Spline
08	1 1/4" Tapered
Custom Order	
07	15 Tooth Spline
26	25mm Str. w/8mm Key, 8mm Tap
28	13 Tooth Spline (16/32 Pitch)
58	1 1/4" Keyed plus Nitrotec C

* Conforms to SAE recommended length

X
Rotation
Drehrichtung
Direction de rotation
Rotacion

Code	Rotation
0	Standard B A
1	Reverse Timed Manifold B A

Code	Rear Rotation
0	Standard
1	Reverse Timed Manifold

Rotation viewed from shaft end.

Shaded areas indicate custom order components. Standard pricing and delivery terms may not apply to these components. Please refer to the price list for details, or consult your Parker Pump Motor division Sales Resource.

*Coupling shaft / Abtriebswelle / Arbre / Eje de acoplamiento
Ø 1 inch / Ø 25mm / 6B SAE
Max. torque cont./int. / Max. Moment cont./int. / Couple maxi cont./int. / Coppia max cont./int.
450/550 Nm

007 TF.indd, b

WARNING
This product can expose you to chemicals including lead and DEHP, which are known to the State of California to cause cancer, and birth defects or other reproductive harm. For more information go to www.p65warnings.ca.gov

Tel: +45 63 12 83 00 | Email: ps@hymatik.com | www.hymatik.com | Hvidkaervej 27a, DK-5250 Odense SV, Denmark

XXXX

Options
Opciones

Code	Options
AAAA	"Standard", Black Paint (045134), Paint area all over except front and rear pilot and mounting flanges and shaft
AAAB	"Standard", No Paint
AAAC	"Standard", Double Paint (045247), Paint area all over except front and rear pilot and mounting flanges and shaft
AABJ	Free Running Rotor Set, Black paint (045134), Paint area all over except front and rear pilot and mounting flanges and shaft
AABT	Black paint (045134), Paint area all over except front and rear pilot and mounting flanges and shaft, No shaft hardware
AAFA	Fluorocarbon (Viton) Seals, High Temp Commutator Seal, No paint
AAFW	Fluorocarbon (Viton) Seals, High Temp Commutator Seal, Black paint (045134), Paint area all over except front and rear pilot and mounting flanges and shaft
AAJH	Fluorocarbon (Viton) Seals, High Temp Commutator Seal, Black paint (045134), Paint area all over except front and rear pilot and mounting flanges and shaft, No shaft hardware
AAJL	No paint, No shaft hardware
AAUP	Fluorocarbon (Viton) Seals, High Temp Commutator Seal, No Paint, No shaft Hardware
AAVE	Free Running Rotor Set, Fluorocarbon (Viton) Seals, High Temp Commutator Seal, Black Paint (045134), Paint area all over except front and rear pilot and mounting flanges and shaft
ABCW	Fluorocarbon (Viton) Seals, High Temperature Commutator Seal, Bidirectional shuttle (.062 Orifice) (11:00*), Black Paint (045134), Paint area all over except front and rear pilot and mounting flanges and shaft, No Shaft Hardware
ABCZ	Fluorocarbon (Viton) Seals, Double paint (045247), Paint area all over except front and rear pilot and mounting flanges and shaft
BBGV	Fluorocarbon (Viton) Seals, High Temperature Commutator Seal, 1015 PSI Int Bidirectional Relief, Black Paint (045134), Paint area all over except front and rear pilot and mounting flanges and shaft, No Shaft Hardware
BBGW	Fluorocarbon (Viton) Seals, High Temperature Commutator Seal, 1450 PSI Int Bidirectional Relief, Black Paint (045134), Paint area all over except front and rear pilot and mounting flanges and shaft, No Shaft Hardware
BBGX	No Shaft Hardware, Fluorocarbon (Viton) Seals, High Temperature Commutator Seal, 2031 PSI Int Bidirectional Relief, Black Paint (045134), Paint area all over except front and rear pilot and mounting flanges and shaft, No Shaft Hardware
BBGY	Fluorocarbon (Viton) Seals, High Temperature Commutator Seal, 3046 PSI Int Bidirectional Relief, Black Paint (045134), Paint area all over except front and rear pilot and mounting flanges and shaft, No Shaft Hardware
BBHC	Fluorocarbon (Viton) Seals, High Temperature Commutator Seal, 725 PSI Int Bidirectional Relief, Black Paint (045134), Paint area all over except front and rear pilot and mounting flanges and shaft, No Shaft Hardware
BBHD	Fluorocarbon (Viton) Seals, High Temperature Commutator Seal, 2538 PSI Int Bidirectional Relief, Black Paint (045134), Paint area all over except front and rear pilot and mounting flanges and shaft, No Shaft Hardware
FSEK	Fluorocarbon (Viton) Seals, High Temperature Commutator Seal, Parker ECD Speed Sensor (455073), Black Paint (045134), Paint area all over except front and rear pilot and mounting flanges and shaft, No Shaft Hardware
FSEN	Fluorocarbon (Viton) Seals, High Temperature Commutator Seal, Parker ECD Speed Sensor (455073), No Paint, No Shaft Hardware

Shaded areas indicate custom order components. Standard pricing and delivery terms may not apply to these components. Please refer to the price list for details, or consult your Parker Pump Motor division Sales Resource.

⚠ **WARNING**
This product can expose you to chemicals including lead and DEHP, which are known to the State of California to cause cancer, and birth defects or other reproductive harm. For more information go to www.p65warnings.ca.gov

Tel: +45 63 12 83 00 | Email: ps@hymatik.com | www.hymatik.com | Hvidkaervej 27a, DK-5250 Odense SV, Denmark

Performance Data / Leistungsdaten
Puissance / Datos Tecnicos

LSHT Torqmotors™ and Nichols™ Motors
TF Series / Serie / Série HY13-1590-011/US,EU

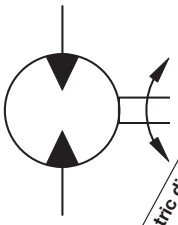

Motor Series TF	Geometric displacement Geom. Schluckvolumen Cylindrée Cilindrata cm³/rev in³/rev	Max. speed @ Max. intermittent flow Max. Drehzahl Intermittierender Betrieb: Vitesse de rotation maxi Velocidad maxima a caudal intermitente maximo rev/min	Max. oil flow Max. Schluckstrom Débit d'huile maxi Portata max *cont / int** l/min g/min		Max. differential pressure Max. Druckgefälle Chute de pression maxi Presion diferencial maxima *cont / int** bar psid		Max. supply pressure Max. Eingangsdruck Pression maxi entrée Presion maxima de alimentacion *max* bar psig	Max. torque Max. Drehmoment Couple maxi Torque Maximo *cont / int** Nm lb-in		Max. performance Max. Leistungsabgabe Puissance de sortie maxi Maximo rendimiento *max* KW HP	Min. starting torque Min. Anlaufmoment Couple min. fourni au dé manrage Torque minimo de arranque *cont / int** Nm lb-in	
TF 0080	**81** 4.9	693	**46** 12	**57** 15	**207** 3000	**276** 4000	**300** 4350	**220** 1948	**296** 2621	**21.5** 28.8	**158** 1401	**205** 1811
TF 0100	**100** 6.1	749	**57** 15	**76** 20	**155** 2250	**241** 3500	**300** 4350	**197** 1746	**318** 2813	**24.9** 33.4	**148** 1309	**243** 2155
TF 0130	**128** 7.8	583	**57** 15	**76** 20	**138** 2000	**207** 3000	**300** 4350	**229** 2031	**356** 3148	**21.7** 29.1	**180** 1596	**278** 2460
TF 0140	**141** 8.6	530	**57** 15	**76** 20	**138** 2000	**207** 3000	**300** 4350	**254** 2248	**393** 3477	**21.8** 29.2	**196** 1739	**308** 2728
TF 0170	**169** 10.3	444	**57** 15	**76** 20	**138** 2000	**207** 3000	**300** 4350	**317** 2808	**489** 4324	**22.7** 30.5	**243** 2152	**385** 3404
TF 0195	**197** 12.0	381	**57** 15	**76** 20	**138** 2000	**207** 3000	**300** 4350	**364** 3222	**562** 4971	**22.4** 30.1	**302** 2671	**468** 4142
TF 0240	**238** 14.5	394	**76** 20	**95** 25	**138** 2000	**207** 3000	**300** 4350	**427** 3782	**670** 5928	**27.7** 37.1	**366** 3242	**572** 5058
TF 0280	**280** 17.1	334	**76** 20	**95** 25	**138** 2000	**207** 3000	**300** 4350	**509** 4502	**794** 7029	**27.8** 37.3	**438** 3876	**672** 5946
TF 0360	**364** 22.2	258	**76** 20	**95** 25	**130** 1880	**190** 2750	**300** 4350	**594** 5257	**880** 7788	**20.0** 26.8	**517** 4575	**779** 6898
TF 0365 Clutch	**364** 22.2	258	**76** 20	**95** 25	**97** 1400	**152** 2200	**300** 4350	**437** 3871	**740** 6456	**20.0** 26.8	**398** 3521	**650** 5749
TF 0405	**405** 24.7	231	**76** 20	**95** 25	**128** 1850	**172** 2750	**300** 4350	**655** 5800	**916** 8106	**22.1** 29.7	**575** 5091	**789** 6978
TF 0475	**477** 29.1	195	**76** 20	**95** 25	**113** 1645	**138** 2000	**300** 4350	**681** 6027	**851** 7528	**17.4** 23.3	**603** 5334	**740** 6548

Performance data based on testing using 10W40 oil with a viscosity of 43.1 cSt (200 SUS) at 54° C (130° F.) Performance data is typical. Actual data may vary slightly from one production motor to another.

Les donnes sur les performances sont basees sur des tests utilisant de l'huile 10W40 d'une viscosite de 200 SUS a 54ºC (130ºF). Ces donnees correspondent a des situations typiques. Les donnes reelles peuvent varier legerement d'un moteur de production a l'autre.

Leistungsdaten sind gemessen mit SAE 10W40 bei einer Viskositaet von 43,1 Cst bei 54ºC. Geringfuegige Abweichungen von den Katalogdaten sind moeglich.

Datos tecnicos obtenidos con aceite 10W40 de 200 SUS de viscosidad a 54ºC (130ºF). Los datos proporcionados son valores tipcos. Los valores exactos reales podrian tener una pequena variacion entre distintos motores.

* Intermittent operation rating applies to 10% of every minute.
Intermittierende Werte maximal 10% von jeder Betriebsminute.
Fonctionnement interm. 10% max. de chaque minute d`utilisation.
Capacidad de funcionamiento intermitente valida para 10% por cada minuto.

WARNING
This product can expose you to chemicals including lead and DEHP, which are known to the State of California to cause cancer, and birth defects or other reproductive harm. For more information go to www.p65warnings.ca.gov

Tel: +45 63 12 83 00 | Email: ps@hymatik.com | www.hymatik.com | Hvidkaervej 27a, DK-5250 Odense SV, Denmark

TF 0080

4.9 cu in / rev

PRESSURE (PSID)

Flow (GPM)	500	1000	1500	2000	2500	3000	3500	4000
.5	256 **19**	546 **14**	835 **8**	1118 **1**				
1	270 **42**	575 **37**	867 **31**	1151 **24**	1434 **17**	1713 **13**	2002 **12**	2289 **13**
2	281 **89**	598 **83**	917 **76**	1233 **68**	1537 **60**	1821 **53**	2090 **46**	2352 **40**
3	282 **135**	601 **128**	922 **121**	1238 **113**	1547 **104**	1845 **96**	2138 **86**	2428 **78**
4	284 **182**	610 **174**	938 **166**	1264 **158**	1586 **149**	1899 **139**	2202 **129**	2491 **120**
5	282 **228**	612 **219**	944 **211**	1278 **202**	1607 **193**	1932 **183**	2250 **172**	2560 **163**
7	274 **321**	607 **311**	945 **301**	1285 **291**	1622 **281**	1957 **270**	2288 **258**	2612 **247**
9	262 **414**	597 **402**	937 **391**	1279 **380**	1622 **369**	1960 **357**	2295 **344**	2628 **331**
12	239 **553**	574 **540**	916 **526**	1260 **514**	1605 **501**	1948 **488**	2287 **472**	2621 **456**
15	215 **693**	546 **677**	886 **661**	1231 **646**	1579 **633**	1927 **619**	2269 **601**	2605 **582**

TORQUE (LB IN) 2605
SPEED (RPM) 582

■ Cont. □ Int.

Intermittent operation rating applies to 10% of every minute.

Fonctionnement interm. 10% max. de chaque minute d`utilisation.

Performance data based on testing using 10W40 oil with a viscosity of 200 SUS at 54° C (130° F.). Performance data is typical. Actual data may vary slightly from one production motor to another.

Les donnees sur les performances sont basees sur des tests utilisant de l'huile 10W40 d'une viscosite de 200 SUS a 54°C (130°F). Ces donnees correspondent a des situations typiques. Les donnees reelles peuvent varier legerement d'un moteur de production a l'autre.

Intermittierende Werte maximal 10% von jeder Betriebsminute.

Capacidad de funcionamiento intermitente valida para 10% por cada minuto.

Leistugsdaten sind gemessen mit SAE 10W40 bei einer Viskositat von 43,1 Cst beo 54°C. Geringfugige Abweichungen von den Katalogerten sond moglich.

Datos tecnicos obtenidos con aceite 10W40 de 200 SUS de viscosidad a 54°C (130°F). Los datos proporcionados son valores tipcos. Los valores exactos reales podrian tener una pequena variacion entre distintos motores.

⚠ WARNING
This product can expose you to chemicals including lead and DEHP, which are known to the State of California to cause cancer, and birth defects or other reproductive harm. For more information go to www.p65warnings.ca.gov

Tel: +45 63 12 83 00 | Email: ps@hymatik.com | www.hymatik.com | Hvidkaervej 27a, DK-5250 Odense SV, Denmark

TF 0100

6.1 cu in / rev

PRESSURE (PSID)

Flow (GPM)	500	1000	1500	2000	2250	2500	3000	3500
.5	318 **14**	679 **9**	1041 **4**					
1	335 **33**	703 **28**	1066 **22**	1430 **17**	1611 **14**	1791 **12**	2162 **9**	2543 **6**
2	351 **71**	743 **65**	1132 **58**	1514 **52**	1700 **48**	1882 **45**	2241 **39**	2602 **34**
3	350 **109**	746 **102**	1138 **95**	1525 **88**	1717 **84**	1907 **80**	2288 **72**	2671 **64**
4	353 **147**	754 **139**	1156 **132**	1554 **124**	1752 **120**	1948 **116**	2334 **107**	2716 **98**
5	352 **184**	759 **177**	1167 **169**	1572 **161**	1774 **156**	1974 **152**	2370 **143**	2762 **133**
7	343 **260**	753 **252**	1166 **243**	1581 **233**	1788 **229**	1994 **224**	2401 **213**	2810 **202**
9	329 **336**	741 **327**	1159 **316**	1579 **306**	1788 **301**	1997 **296**	2411 **284**	2824 **272**
12	299 **449**	715 **438**	1137 **426**	1561 **415**	1773 **409**	1985 **403**	2406 **391**	2825 **377**
15	259 **562**	679 **549**	1106 **536**	1532 **523**	1746 **517**	1959 **510**	2387 **496**	2813 **480**
20	186 **749**	607 **734**	1034 **718**	1463 **703**	1679 **696**	1896 **689**	2331 **671**	2763 **653**

TORQUE (LB IN) 2763
SPEED (RPM) 653

■ Cont. □ Int.

Intermittent operation rating applies to 10% of every minute.

Fonctionnement interm. 10% max. de chaque minute d`utilisation.

Performance data based on testing using 10W40 oil with a viscosity of 200 SUS at 54° C (130° F.). Performance data is typical. Actual data may vary slightly from one production motor to another.

Les donnees sur les performances sont basees sur des tests utilisant de l'huile 10W40 d'une viscosite de 200 SUS a 54°C (130°F). Ces donnees correspondent a des situations typiques. Les donnees reelles peuvent varier legerement d'un moteur de production a l'autre.

Intermittierende Werte maximal 10% von jeder Betriebsminute.

Capacidad de funcionamiento intermitente valida para 10% por cada minuto.

Leistugsdaten sind gemessen mit SAE 10W40 bei einer Viskositat von 43,1 Cst beo 54°C. Geringfugige Abweichungen von den Katalogerten sond moglich.

Datos tecnicos obtenidos con aceite 10W40 de 200 SUS de viscosidad a 54°C (130°F). Los datos proporcionados son valores tipcos. Los valores exactos reales podrian tener una pequena variacion entre distintos motores.

WARNING
This product can expose you to chemicals including lead and DEHP, which are known to the State of California to cause cancer, and birth defects or other reproductive harm. For more information go to www.p65warnings.ca.gov

Tel: +45 63 12 83 00 | Email: ps@hymatik.com | www.hymatik.com | Hvidkaervej 27a, DK-5250 Odense SV, Denmark

TF 0130
7.8 cu in / rev

PRESSURE (PSID)

Flow (GPM)	500	1000	1500	2000	2500	3000
.5	441 **10**	927 **7**	1413 **3**			
1	456 **24**	948 **21**	1440 **17**	1935 **13**	2422 **9**	2909 **5**
2	478 **52**	991 **47**	1495 **42**	2004 **36**	2508 **32**	3009 **29**
3	475 **82**	993 **76**	1510 **70**	2023 **63**	2533 **57**	3042 **52**
4	479 **112**	1006 **105**	1529 **98**	2048 **91**	2568 **85**	3084 **79**
5	478 **141**	1014 **134**	1548 **127**	2076 **119**	2600 **113**	3115 **106**
7	467 **200**	1010 **192**	1553 **184**	2094 **176**	2632 **169**	3166 **161**
9	447 **259**	996 **251**	1546 **242**	2094 **233**	2640 **225**	3184 **216**
12	410 **348**	961 **338**	1518 **328**	2073 **318**	2626 **309**	3177 **299**
15	365 **436**	914 **426**	1474 **415**	2031 **404**	2589 **394**	3148 **382**
20	263 **583**	812 **572**	1371 **559**	1933 **547**	2498 **535**	3059 **522**

TORQUE (LB IN) 3059
SPEED (RPM) 522

☒ Cont. ☐ Int.

Intermittent operation rating applies to 10% of every minute.

Fonctionnement interm. 10% max. de chaque minute d`utilisation.

Performance data based on testing using 10W40 oil with a viscosity of 200 SUS at 54° C (130° F.). Performance data is typical. Actual data may vary slightly from one production motor to another.

Les donnees sur les performances sont basees sur des tests utilisant de l'huile 10W40 d'une viscosite de 200 SUS a 54°C (130°F). Ces donnees correspondent a des situations typiques. Les donnees reelles peuvent varier legerement d'un moteur de production a l'autre.

Intermittierende Werte maximal 10% von jeder Betriebsminute.

Capacidad de funcionamiento intermitente valida para 10% por cada minuto.

Leistugsdaten sind gemessen mit SAE 10W40 bei einer Viskositat von 43,1 Cst beo 54°C. Geringfugige Abweichungen von den Katalogerten sond moglich.

Datos tecnicos obtenidos con aceite 10W40 de 200 SUS de viscosidad a 54°C (130°F). Los datos proporcionados son valores tipcos. Los valores exactos reales podrian tener una pequena variacion entre distintos motores.

⚠ WARNING
This product can expose you to chemicals including lead and DEHP, which are known to the State of California to cause cancer, and birth defects or other reproductive harm. For more information go to www.p65warnings.ca.gov

Tel: +45 63 12 83 00 | Email: ps@hymatik.com | www.hymatik.com | Hvidkaervej 27a, DK-5250 Odense SV, Denmark

TF 0140

8.6 cu in / rev

PRESSURE (PSID)

Flow (GPM)	500	1000	1500	2000	2500	3000
.5	485 **11**	1025 **8**	1560 **4**			
1	507 **24**	1056 **20**	1594 **16**	2137 **12**	2682 **8**	3224 **5**
2	526 **50**	1101 **46**	1670 **42**	2237 **37**	2796 **33**	3336 **28**
3	525 **77**	1103 **72**	1676 **68**	2246 **63**	2814 **57**	3370 **52**
4	528 **103**	1114 **98**	1696 **93**	2277 **88**	2857 **82**	3423 **77**
5	528 **130**	1120 **125**	1712 **119**	2301 **113**	2885 **107**	3456 **101**
7	516 **184**	1115 **177**	1716 **170**	2314 **164**	2908 **158**	3497 **151**
9	496 **237**	1100 **230**	1707 **222**	2311 **215**	2912 **208**	3510 **200**
12	454 **317**	1063 **309**	1677 **300**	2290 **292**	2901 **284**	3506 **275**
15	403 **397**	1011 **388**	1629 **378**	2248 **368**	2866 **359**	3477 **349**
20	298 **530**	908 **520**	1525 **508**	2149 **497**	2775 **485**	3401 **473**

TORQUE (LB IN) 3401
SPEED (RPM) 473

☒ Cont. ☐ Int.

Intermittent operation rating applies to 10% of every minute.

Fonctionnement interm. 10% max. de chaque minute d`utilisation.

Performance data based on testing using 10W40 oil with a viscosity of 200 SUS at 54° C (130° F.). Performance data is typical. Actual data may vary slightly from one production motor to another.

Les donnees sur les performances sont basees sur des tests utilisant de l'huile 10W40 d'une viscosite de 200 SUS a 54°C (130°F). Ces donnees correspondent a des situations typiques. Les donnees reelles peuvent varier legerement d'un moteur de production a l'autre.

Intermittierende Werte maximal 10% von jeder Betriebsminute.

Capacidad de funcionamiento intermitente valida para 10% por cada minuto.

Leistugsdaten sind gemessen mit SAE 10W40 bei einer Viskositat von 43,1 Cst beo 54°C. Geringfugige Abweichungen von den Katalogerten sond moglich.

Datos tecnicos obtenidos con aceite 10W40 de 200 SUS de viscosidad a 54°C (130°F). Los datos proporcionados son valores tipcos. Los valores exactos reales podrian tener una pequena variacion entre distintos motores.

⚠ **WARNING**
This product can expose you to chemicals including lead and DEHP, which are known to the State of California to cause cancer, and birth defects or other reproductive harm. For more information go to www.p65warnings.ca.gov

Tel: +45 63 12 83 00 | Email: ps@hymatik.com | www.hymatik.com | Hvidkaervej 27a, DK-5250 Odense SV, Denmark

TF 0170

10.3 cu in / rev

PRESSURE (PSID)

Flow (GPM)	500	1000	1500	2000	2500	3000
.5	627 **8**	1304 **6**	1980 **2**			
1	657 **19**	1341 **16**	2021 **12**	2714 **9**	3404 **4**	4101 **1**
2	687 **42**	1409 **38**	2123 **34**	2829 **29**	3520 **25**	4197 **21**
3	681 **64**	1407 **60**	2127 **56**	2841 **51**	3552 **45**	4263 **40**
4	681 **86**	1419 **82**	2153 **77**	2879 **72**	3604 **67**	4321 **61**
5	675 **109**	1423 **104**	2165 **99**	2897 **94**	3628 **88**	4355 **82**
7	654 **153**	1406 **148**	2161 **143**	2911 **137**	3652 **130**	4385 **123**
9	624 **198**	1380 **193**	2143 **186**	2900 **180**	3645 **173**	4384 **165**
12	572 **265**	1331 **259**	2101 **252**	2863 **244**	3618 **236**	4364 **228**
15	514 **332**	1267 **325**	2040 **317**	2808 **309**	3570 **300**	4324 **291**
20	387 **444**	1138 **436**	1903 **427**	2667 **417**	3435 **407**	4201 **396**

TORQUE (LB IN) 4201
SPEED (RPM) 396

☐ Cont. ☐ Int.

Intermittent operation rating applies to 10% of every minute.

Fonctionnement interm. 10% max. de chaque minute d`utilisation.

Performance data based on testing using 10W40 oil with a viscosity of 200 SUS at 54° C (130° F.). Performance data is typical. Actual data may vary slightly from one production motor to another.

Les donnees sur les performances sont basees sur des tests utilisant de l'huile 10W40 d'une viscosite de 200 SUS a 54°C (130°F). Ces donnees correspondent a des situations typiques. Les donnees reelles peuvent varier legerement d'un moteur de production a l'autre.

Intermittierende Werte maximal 10% von jeder Betriebsminute.

Capacidad de funcionamiento intermitente valida para 10% por cada minuto.

Leistugsdaten sind gemessen mit SAE 10W40 bei einer Viskositat von 43,1 Cst beo 54°C. Geringfugige Abweichungen von den Katalogerten sond moglich.

Datos tecnicos obtenidos con aceite 10W40 de 200 SUS de viscosidad a 54°C (130°F). Los datos proporcionados son valores tipcos. Los valores exactos reales podrian tener una pequena variacion entre distintos motores.

007 TF.indd, b

⚠ **WARNING**
This product can expose you to chemicals including lead and DEHP, which are known to the State of California to cause cancer, and birth defects or other reproductive harm. For more information go to www.p65warnings.ca.gov

Tel: +45 63 12 83 00 | Email: ps@hymatik.com | www.hymatik.com | Hvidkaervej 27a, DK-5250 Odense SV, Denmark

TF 0195

12.0 cu in / rev

PRESSURE (PSID)

Flow (GPM)	500	1000	1500	2000	2500	3000
.5	710 **8**	1494 **7**	2286 **5**	3085 **3**		
1	737 **18**	1537 **16**	2334 **14**	3133 **12**	3946 **9**	4767 **7**
2	757 **37**	1587 **35**	2417 **32**	3242 **29**	4067 **26**	4887 **23**
3	758 **56**	1591 **53**	2424 **51**	3254 **47**	4086 **44**	4914 **40**
4	759 **75**	1604 **72**	2450 **69**	3292 **66**	4131 **62**	4965 **58**
5	755 **94**	1610 **91**	2469 **88**	3321 **84**	4163 **80**	5000 **75**
7	737 **132**	1599 **129**	2467 **125**	3329 **120**	4185 **116**	5034 **110**
9	709 **170**	1577 **166**	2451 **162**	3319 **157**	4181 **152**	5034 **146**
12	652 **228**	1523 **223**	2405 **218**	3283 **212**	4154 **206**	5018 **199**
15	586 **285**	1451 **280**	2338 **273**	3222 **267**	4100 **260**	4971 **252**
20	445 **381**	1303 **375**	2174 **367**	3056 **359**	3939 **350**	4822 **341**

TORQUE (LB IN) 4822
SPEED (RPM) 341

☒ Cont. ☐ Int.

Intermittent operation rating applies to 10% of every minute.

Fonctionnement interm. 10% max. de chaque minute d`utilisation.

Performance data based on testing using 10W40 oil with a viscosity of 200 SUS at 54° C (130° F.). Performance data is typical. Actual data may vary slightly from one production motor to another.

Les donnees sur les performances sont basees sur des tests utilisant de l'huile 10W40 d'une viscosite de 200 SUS a 54°C (130°F). Ces donnees correspondent a des situations typiques. Les donnees reelles peuvent varier legerement d'un moteur de production a l'autre.

Intermittierende Werte maximal 10% von jeder Betriebsminute.

Capacidad de funcionamiento intermitente valida para 10% por cada minuto.

Leistugsdaten sind gemessen mit SAE 10W40 bei einer Viskositat von 43,1 Cst beo 54°C. Geringfugige Abweichungen von den Katalogerten sond moglich.

Datos tecnicos obtenidos con aceite 10W40 de 200 SUS de viscosidad a 54°C (130°F). Los datos proporcionados son valores tipcos. Los valores exactos reales podrian tener una pequena variacion entre distintos motores.

⚠ **WARNING**
This product can expose you to chemicals including lead and DEHP, which are known to the State of California to cause cancer, and birth defects or other reproductive harm. For more information go to www.p65warnings.ca.gov

Tel: +45 63 12 83 00 | Email: ps@hymatik.com | www.hymatik.com | Hvidkaervej 27a, DK-5250 Odense SV, Denmark

TF 0240
14.5 cu in / rev

PRESSURE (PSID)

Flow (GPM)	500	1000	1500	2000	2500	3000
.5	856 **7**	1796 **5**	2758 **3**	3739 **1**		
1	883 **15**	1838 **13**	2801 **11**	3780 **8**	4756 **5**	5741 **3**
2	920 **30**	1912 **28**	2910 **26**	3895 **23**	4880 **20**	5864 **17**
3	919 **46**	1920 **44**	2927 **41**	3931 **38**	4924 **35**	5919 **31**
4	924 **62**	1941 **60**	2958 **57**	3967 **54**	4978 **50**	5985 **45**
5	919 **78**	1948 **75**	2975 **72**	3998 **69**	5017 **64**	6025 **60**
7	904 **109**	1947 **106**	2995 **103**	4036 **99**	5066 **94**	6090 **89**
9	868 **141**	1922 **137**	2982 **134**	4033 **130**	5072 **124**	6101 **119**
12	815 **188**	1866 **184**	2930 **180**	3998 **175**	5053 **169**	6090 **162**
15	726 **235**	1791 **231**	2865 **227**	3934 **221**	5002 **214**	6054 **206**
20	539 **315**	1616 **310**	2699 **304**	3782 **297**	4863 **289**	5928 **280**
25	335 **394**	1404 **389**	2464 **382**	3542 **374**	4634 **365**	5718 **354**

TORQUE (LB IN) 5718
SPEED (RPM) 354

■ Cont. □ Int.

Intermittent operation rating applies to 10% of every minute.

Fonctionnement interm. 10% max. de chaque minute d`utilisation.

Performance data based on testing using 10W40 oil with a viscosity of 200 SUS at 54° C (130° F.). Performance data is typical. Actual data may vary slightly from one production motor to another.

Les donnees sur les performances sont basees sur des tests utilisant de l'huile 10W40 d'une viscosite de 200 SUS a 54°C (130°F). Ces donnees correspondent a des situations typiques. Les donnees reelles peuvent varier legerement d'un moteur de production a l'autre.

Intermittierende Werte maximal 10% von jeder Betriebsminute.

Capacidad de funcionamiento intermitente valida para 10% por cada minuto.

Leistugsdaten sind gemessen mit SAE 10W40 bei einer Viskositat von 43,1 Cst beo 54°C. Geringfugige Abweichungen von den Katalogerten sond moglich.

Datos tecnicos obtenidos con aceite 10W40 de 200 SUS de viscosidad a 54°C (130°F). Los datos proporcionados son valores tipcos. Los valores exactos reales podrian tener una pequena variacion entre distintos motores.

WARNING
This product can expose you to chemicals including lead and DEHP, which are known to the State of California to cause cancer, and birth defects or other reproductive harm. For more information go to www.p65warnings.ca.gov

Tel: +45 63 12 83 00 | Email: ps@hymatik.com | www.hymatik.com | Hvidkaervej 27a, DK-5250 Odense SV, Denmark

TF 0280

17.1 cu in / rev

PRESSURE (PSID)

Flow (GPM)	500	1000	1500	2000	2500	3000
.5	1048 **6**	2180 **5**	3333 **4**	4508 **3**	5704 **2**	
1	1080 **13**	2237 **12**	3399 **11**	4577 **9**	5762 **7**	6925 **5**
2	1120 **26**	2316 **25**	3516 **23**	4726 **22**	5915 **19**	7092 **17**
3	1117 **39**	2320 **38**	3528 **36**	4742 **34**	5949 **32**	7134 **29**
4	1120 **53**	2337 **51**	3559 **49**	4778 **47**	5988 **44**	7187 **41**
5	1109 **66**	2342 **64**	3575 **62**	4802 **60**	6020 **56**	7218 **53**
7	1086 **93**	2331 **91**	3582 **88**	4827 **85**	6058 **81**	7266 **77**
9	1040 **120**	2299 **117**	3562 **114**	4811 **111**	6048 **106**	7264 **102**
12	978 **160**	2226 **157**	3494 **154**	4758 **149**	6001 **144**	7217 **138**
15	888 **200**	2146 **197**	3419 **193**	4688 **188**	5945 **182**	7176 **175**
20	678 **267**	1945 **263**	3223 **258**	4502 **252**	5777 **245**	7029 **236**
25	442 **334**	1686 **330**	2938 **324**	4206 **316**	5487 **308**	6754 **297**

TORQUE (LB IN) 6754
SPEED (RPM) 297

☐ Cont. ☐ Int.

Intermittent operation rating applies to 10% of every minute.

Fonctionnement interm. 10% max. de chaque minute d`utilisation.

Performance data based on testing using 10W40 oil with a viscosity of 200 SUS at 54° C (130° F.). Performance data is typical. Actual data may vary slightly from one production motor to another.

Les donnees sur les performances sont basees sur des tests utilisant de l'huile 10W40 d'une viscosite de 200 SUS a 54°C (130°F). Ces donnees correspondent a des situations typiques. Les donnees reelles peuvent varier legerement d'un moteur de production a l'autre.

Intermittierende Werte maximal 10% von jeder Betriebsminute.

Capacidad de funcionamiento intermitente valida para 10% por cada minuto.

Leistugsdaten sind gemessen mit SAE 10W40 bei einer Viskositat von 43,1 Cst beo 54°C. Geringfugige Abweichungen von den Katalogerten sond moglich.

Datos tecnicos obtenidos con aceite 10W40 de 200 SUS de viscosidad a 54°C (130°F). Los datos proporcionados son valores tipcos. Los valores exactos reales podrian tener una pequena variacion entre distintos motores.

WARNING
This product can expose you to chemicals including lead and DEHP, which are known to the State of California to cause cancer, and birth defects or other reproductive harm. For more information go to www.p65warnings.ca.gov

Tel: +45 63 12 83 00 | Email: ps@hymatik.com | www.hymatik.com | Hvidkaervej 27a, DK-5250 Odense SV, Denmark

TF 0360

22.2 cu in / rev

Flow (GPM)	PRESSURE (PSID) 500	1000	1500	1850	2000	2500	2750
.5	1436 **5**	2955 **4**	4497 **4**	5582 **4**	6047 **3**	7608 **3**	8393 **3**
1	1492 **10**	3042 **9**	4591 **9**	5672 **8**	6136 **8**	7673 **8**	8445 **7**
2	1532 **20**	3114 **19**	4691 **19**	5784 **18**	6249 **18**	7799 **17**	8575 **16**
3	1527 **30**	3114 **29**	4699 **29**	5796 **28**	6263 **27**	7814 **26**	8590 **25**
4	1526 **40**	3125 **40**	4718 **38**	5821 **37**	6290 **37**	7847 **35**	8624 **34**
5	1504 **51**	3114 **50**	4719 **48**	5831 **47**	6304 **46**	7866 **44**	8641 **43**
7	1469 **71**	3090 **70**	4697 **68**	5809 **66**	6282 **66**	7850 **63**	8630 **61**
9	1392 **92**	3017 **90**	4640 **88**	5766 **86**	6243 **85**	7817 **81**	8595 **79**
12	1279 **122**	2902 **120**	4526 **117**	5653 **115**	6133 **113**	7712 **109**	8493 **106**
15	1106 **153**	2739 **151**	4385 **147**	5518 **144**	5999 **142**	7578 **139**	8355 **134**
20	840 **204**	2465 **202**	4115 **197**	5256 **193**	5735 **191**	7329 **184**	8121 **180**
25	516 **255**	2138 **253**	3756 **248**	4876 **243**	5356 **240**	6976 **232**	7785 **226**

TORQUE (LB IN) 7785
SPEED (RPM) 226

■ Cont. □ Int.

Intermittent operation rating applies to 10% of every minute.

Fonctionnement interm. 10% max. de chaque minute d`utilisation.

Performance data based on testing using 10W40 oil with a viscosity of 200 SUS at 54° C (130° F.). Performance data is typical. Actual data may vary slightly from one production motor to another.

Les donnees sur les performances sont basees sur des tests utilisant de l'huile 10W40 d'une viscosite de 200 SUS a 54°C (130°F). Ces donnees correspondent a des situations typiques. Les donnees reelles peuvent varier legerement d'un moteur de production a l'autre.

Intermittierende Werte maximal 10% von jeder Betriebsminute.

Capacidad de funcionamiento intermitente valida para 10% por cada minuto.

Leistugsdaten sind gemessen mit SAE 10W40 bei einer Viskositat von 43,1 Cst beo 54°C. Geringfugige Abweichungen von den Katalogerten sond moglich.

Datos tecnicos obtenidos con aceite 10W40 de 200 SUS de viscosidad a 54°C (130°F). Los datos proporcionados son valores tipcos. Los valores exactos reales podrian tener una pequena variacion entre distintos motores.

WARNING
This product can expose you to chemicals including lead and DEHP, which are known to the State of California to cause cancer, and birth defects or other reproductive harm. For more information go to www.p65warnings.ca.gov

Tel: +45 63 12 83 00 | Email: ps@hymatik.com | www.hymatik.com | Hvidkaervej 27a, DK-5250 Odense SV, Denmark

TF 0405

24.7 cu in / rev

PRESSURE (PSID)

Flow (GPM)	500	1000	1500	1850	2000	2500
.5	1567 **4**	3212 **4**	4883 **3**	6075 **2**	6587 **2**	8325 **2**
1	1623 **9**	3298 **8**	4972 **7**	6151 **6**	6660 **6**	8371 **5**
2	1662 **18**	3377 **17**	5103 **16**	6306 **14**	6815 **14**	8507 **12**
3	1665 **27**	3392 **26**	5118 **24**	6325 **23**	6839 **22**	8554 **20**
4	1667 **37**	3414 **35**	5155 **33**	6367 **32**	6880 **31**	8591 **28**
5	1652 **46**	3417 **44**	5171 **42**	6393 **40**	6909 **39**	8625 **36**
7	1623 **64**	3399 **62**	5163 **60**	6392 **58**	6912 **56**	8638 **53**
9	1549 **83**	3337 **81**	5125 **78**	6361 **75**	6883 **73**	8605 **69**
12	1432 **111**	3216 **108**	5006 **104**	6252 **101**	6779 **99**	8523 **94**
15	1259 **138**	3059 **136**	4866 **131**	6113 **128**	6644 **126**	8394 **120**
20	936 **185**	2735 **182**	4542 **177**	5800 **172**	6335 **170**	8106 **162**
25	657 **231**	2435 **229**	4187 **222**	5418 **217**	5945 **214**	7709 **205**

TORQUE (LB IN) 7709
SPEED (RPM) 205

☐ Cont. ☐ Int.

Intermittent operation rating applies to 10% of every minute.

Fonctionnement interm. 10% max. de chaque minute d`utilisation.

Performance data based on testing using 10W40 oil with a viscosity of 200 SUS at 54° C (130° F.). Performance data is typical. Actual data may vary slightly from one production motor to another.

Les donnees sur les performances sont basees sur des tests utilisant de l'huile 10W40 d'une viscosite de 200 SUS a 54°C (130°F). Ces donnees correspondent a des situations typiques. Les donnees reelles peuvent varier legerement d'un moteur de production a l'autre.

Intermittierende Werte maximal 10% von jeder Betriebsminute.

Capacidad de funcionamiento intermitente valida para 10% por cada minuto.

Leistugsdaten sind gemessen mit SAE 10W40 bei einer Viskositat von 43,1 Cst beo 54°C. Geringfugige Abweichungen von den Katalogerten sond moglich.

Datos tecnicos obtenidos con aceite 10W40 de 200 SUS de viscosidad a 54°C (130°F). Los datos proporcionados son valores tipcos. Los valores exactos reales podrian tener una pequena variacion entre distintos motores.

WARNING
This product can expose you to chemicals including lead and DEHP, which are known to the State of California to cause cancer, and birth defects or other reproductive harm. For more information go to www.p65warnings.ca.gov

Tel: +45 63 12 83 00 | Email: ps@hymatik.com | www.hymatik.com | Hvidkaervej 27a, DK-5250 Odense SV, Denmark

TF 0475

29.1 cu in / rev

PRESSURE (PSID)

Flow (GPM)	500	1000	1500	1645	1850	2000
.5	1870 **4**	3857 **3**	5875 **3**	6460 **3**	7292 **2**	7902 **2**
1	1941 **8**	3967 **7**	5992 **7**	6582 **6**	7410 **6**	8016 **6**
2	2003 **15**	4071 **15**	6124 **14**	6717 **14**	7554 **13**	8166 **13**
3	1994 **23**	4072 **23**	6145 **22**	6738 **21**	7578 **20**	8192 **20**
4	1993 **31**	4091 **30**	6177 **29**	6776 **28**	7620 **27**	8235 **27**
5	1964 **39**	4081 **38**	6186 **37**	6790 **36**	7639 **35**	8258 **34**
7	1918 **55**	4048 **54**	6159 **52**	6765 **51**	7620 **50**	8242 **48**
9	1829 **70**	3965 **59**	6098 **67**	6709 **66**	7565 **64**	8189 **63**
12	1694 **94**	3822 **92**	5954 **89**	6575 **89**	7440 **87**	8063 **85**
15	1462 **117**	3617 **116**	5766 **112**	6385 **111**	7254 **109**	7875 **107**
20	1070 **156**	3231 **154**	5394 **151**	6027 **149**	6900 **147**	7530 **145**
25	711 **195**	2820 **194**	4927 **190**	5531 **188**	6391 **185**	7028 **183**

TORQUE (LB IN) 7028
SPEED (RPM) 183

TF 0365 Clutch Motor

22.2 cu in / rev

PRESSURE (PSID)

Flow (GPM)	500	1000	1400	1500	2000	2200
.5	1392 **5**	2902 **4**	4131 **3**	4441 **3**	6013 **2**	6653 **2**
1	1439 **10**	2972 **9**	4208 **8**	4518 **8**	6090 **7**	6725 **7**
2	1478 **20**	3061 **19**	4332 **18**	4651 **18**	6248 **17**	6884 **16**
3	1478 **30**	3071 **29**	4349 **29**	4670 **28**	6268 **27**	6906 **26**
4	1480 **41**	3089 **40**	4379 **39**	4703 **38**	6311 **37**	6950 **36**
5	1467 **51**	3096 **50**	4396 **49**	4720 **49**	6332 **47**	6971 **46**
7	1434 **72**	3072 **70**	4384 **69**	4712 **69**	6344 **66**	6990 **65**
9	1378 **92**	3031 **91**	4355 **89**	4686 **89**	6322 **86**	6970 **85**
12	1278 **123**	2922 **122**	4252 **120**	4585 **119**	6242 **116**	6897 **115**
15	1158 **154**	2810 **152**	4139 **150**	4470 **150**	6127 **146**	6787 **144**
20	873 **206**	2531 **204**	3871 **202**	4206 **201**	5878 **197**	6546 **194**
25	557 **258**	2197 **255**	3509 **253**	3839 **252**	5498 **247**	6175 **244**

Flow (GPM)

☐ Cont. ☐ Int.

Intermittent operation rating applies to 10% of every minute.

Fonctionnement interm. 10% max. de chaque minute d`utilisation.

Performance data based on testing using 10W40 oil with a viscosity of 200 SUS at 54° C (130° F.). Performance data is typical. Actual data may vary slightly from one production motor to another.

Les donnees sur les performances sont basees sur des tests utilisant de l'huile 10W40 d'une viscosite de 200 SUS a 54°C (130°F). Ces donnees correspondent a des situations typiques. Les donnees reelles peuvent varier legerement d'un moteur de production a l'autre.

Intermittierende Werte maximal 10% von jeder Betriebsminute.

Capacidad de funcionamiento intermitente valida para 10% por cada minuto.

Leistugsdaten sind gemessen mit SAE 10W40 bei einer Viskositat von 43,1 Cst beo 54°C. Geringfugige Abweichungen von den Katalogerten sond moglich.

Datos tecnicos obtenidos con aceite 10W40 de 200 SUS de viscosidad a 54°C (130°F). Los datos proporcionados son valores tipcos. Los valores exactos reales podrian tener una pequena variacion entre distintos motores.

WARNING
This product can expose you to chemicals including lead and DEHP, which are known to the State of California to cause cancer, and birth defects or other reproductive harm. For more information go to www.p65warnings.ca.gov

Tel: +45 63 12 83 00 | Email: ps@hymatik.com | www.hymatik.com | Hvidkaervej 27a, DK-5250 Odense SV, Denmark

Flange Mount / Standardgehäuse
Monture à bride(s) / Montaje de brida

Side Load - N (lbs)

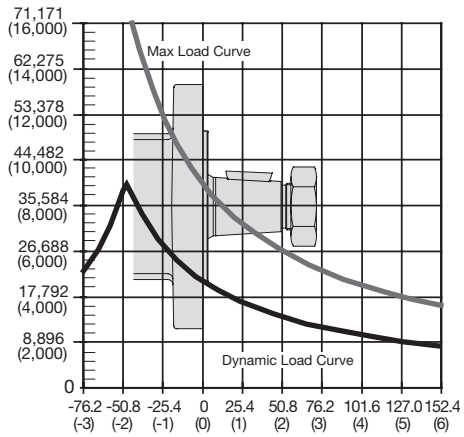

Distance from Mounting Face - mm (in)
Motor Image Not To Scale

The dynamic side load curve is based on uni-directional steady state loads for L_{10} bearing life at 3 x 10^6 revolutions.
Die zulässige auslegbare radiale Wellenbelastungskurve ist unter ruhenden, einseitig statisch gerichteten Lastverhältnissen auf eine L_{10} Lebensdauer mit 3 x 10^6 Umdrehungen kalkuliert.
La courbe de charge latérale permise se base sur des charges unidirectionnelles en régime permanent pour le roulement L_{10} à 3 x 10^6 révolutions.
La curva de valores admisibles de carga lateral está basada en cargas constantes para cojinetes L_{10} a 3 x 10^6 revoluciones.

Wheel Mount / Radnabengehäuse
Monture à roue / Montaje de rueda

Side Load - N (lbs)

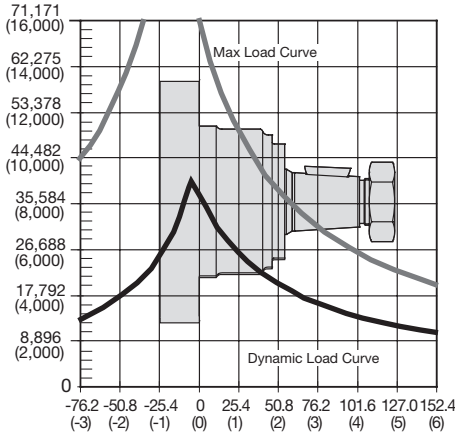

Distance from Mounting Face - mm (in)
Motor Image Not To Scale

The maximum load curve is defined by bearing static load capacity. This curve should not be exceeded at any time including shock loads.
Die maximale radiale Wellenbelastungskurve ist definiert als maximale statische Last ohne Drehzahl. Sie gilt als Grenze und sollte keinesfalls überschritten werden.
La courbe de charge maximale est définie par la capacité de charge statique portante. Cette courbe ne devrait être dépassée en aucun moment y compris pour les charges par à-coups.
La curva de carga máxima queda definida por la capacidad de carga estática del cojinete. No se deben superar los valores de esta curva, ni siquiera con cargas provisorias de impacto.

Equation to Calculate the Expected Radial Bearing Life
Gleichung zur Ermittlung der Lagerlebensdauer

Equation to calculate the dynamic bearing life for a given load:
Bestimmung der erlaubten radialen Wellenbelastung mit vorgegebener Last

Use F_a, F_b and S in equation to determine hours of L_{10} bearing life.
Die Lebensdauer in Stunden ergibt sich durch einsetzen von F_a, F_b, und S in die nachstehende Formel.

$$L = \frac{3 \times 10^6}{60 \times S} \left\{ \frac{F_a}{F_b} \right\}^{3.33}$$

Where / Mit:

S = Shaft Speed RPM / Abtriebswellendrehzahl in min^{-1}
L = Life In Hours / Lebensdauer in Stunden
F_a = Dynamic side load defined by above curve at a distance from mounting flange. / Erlaubte radiale Wellenbelastung als Function der Laenge
F_b = Application side load. / Anwendungsseitige Wellenbelastung

Note: Calculations are based on L_{10} bearing life per ISO 281.
Auslegung basiert auf einer L_{10} Lenbendauer nach ISO 281.

WARNING
This product can expose you to chemicals including lead and DEHP, which are known to the State of California to cause cancer, and birth defects or other reproductive harm. For more information go to www.p65warnings.ca.gov

Tel: +45 63 12 83 00 | Email: ps@hymatik.com | www.hymatik.com | Hvidkaervej 27a, DK-5250 Odense SV, Denmark

Code: AH

SAE A 2-Bolt, ISO 6149-1 M22 x 1.5

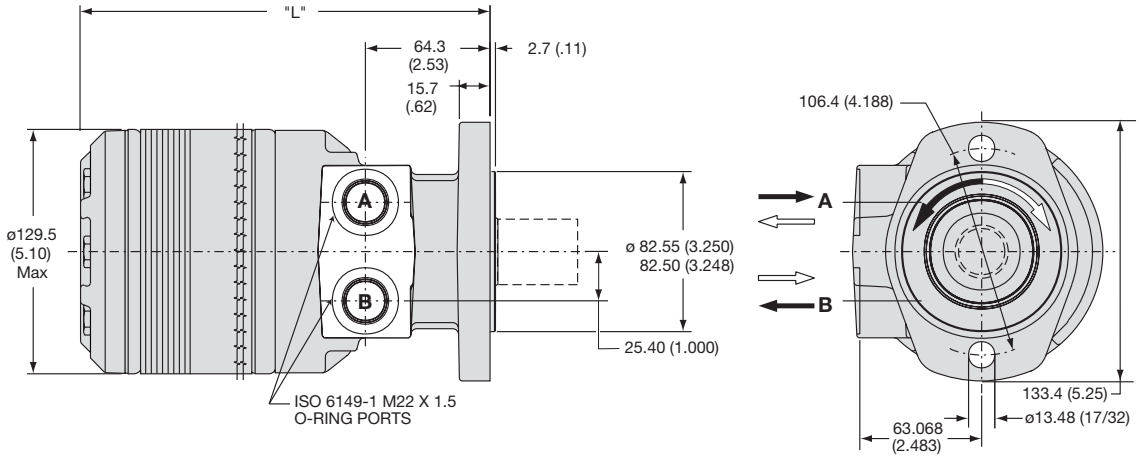

Code AH	disp.	0080	0100	0130	0140	0170	0195	0240	0280	0360	0405	0475
Weight/Gewicht	**kg**	**13.6**	**13.6**	**13.8**	**13.9**	**14.2**	**14.5**	**14.9**	**15.2**	**16.0**	**16.5**	**17.2**
Poids/Peso	(lb)	(29.9)	(30.0)	(30.5)	(30.7)	(31.3)	(31.9)	(32.9)	(33.5)	(35.2)	(36.4)	(37.9)
Length	**"L" mm**	**190.8**	**190.8**	**193.8**	**195.6**	**198.6**	**201.9**	**207**	**211.3**	**221.0**	**225.3**	**233.7**
	"L" (in)	(7.51)	(7.51)	(7.63)	(7.70)	(7.82)	(7.95)	(8.13)	(8.32)	(8.70)	(8.87)	(9.20)

Code: AM

SAE A 2-Bolt, Manifold

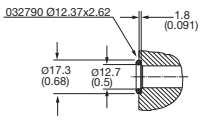

Motor with manifold mount is supplied with 2 o-rings.
Zum Motor mit Universalanschluß werden 2 o-ringe geliefert.
Deux joints toriques sont livrés avec les moteurs a plan de raccordement universel.
Il blocchetto connessioni é corredato da 2 OR.

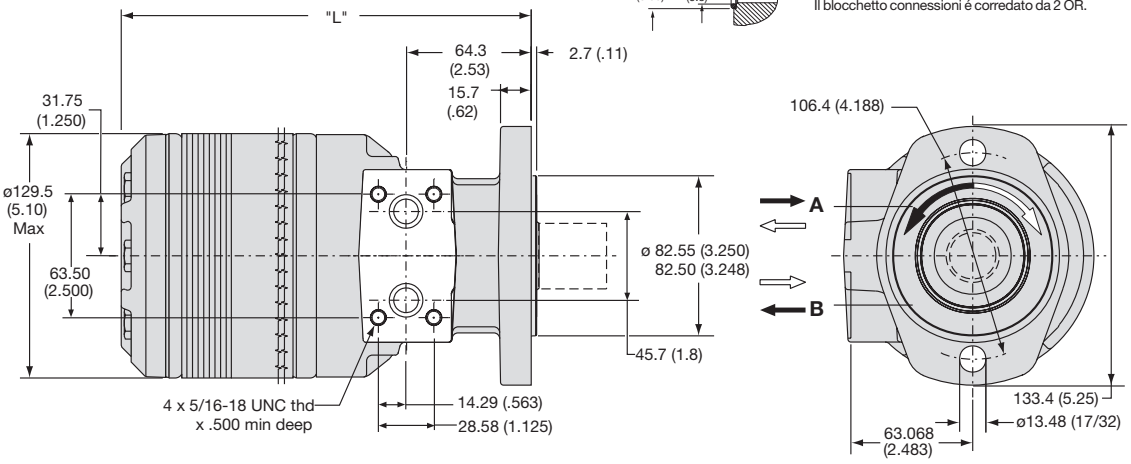

Code AM	disp.	0080	0100	0130	0140	0170	0195	0240	0280	0360	0405	0475
Weight/Gewicht	**kg**	**13.6**	**13.6**	**13.8**	**13.9**	**14.2**	**14.5**	**14.9**	**15.2**	**16.0**	**16.5**	**17.2**
Poids/Peso	(lb)	(29.9)	(30.0)	(30.5)	(30.7)	(31.3)	(31.9)	(32.9)	(33.5)	(35.2)	(36.4)	(37.9)
Length	**"L" mm**	**190.8**	**190.8**	**193.8**	**195.6**	**198.6**	**201.9**	**207**	**211.3**	**221.0**	**225.3**	**233.7**
	"L" (in)	(7.51)	(7.51)	(7.63)	(7.70)	(7.82)	(7.95)	(8.13)	(8.32)	(8.70)	(8.87)	(9.20)

English equivalents for metric specifications are shown in ( ).

WARNING
This product can expose you to chemicals including lead and DEHP, which are known to the State of California to cause cancer, and birth defects or other reproductive harm. For more information go to www.p65warnings.ca.gov

Tel: +45 63 12 83 00 | Email: ps@hymatik.com | www.hymatik.com | Hvidkaervej 27a, DK-5250 Odense SV, Denmark

Code: AS

SAE A 2-Bolt, 7/8-14 SAE O-Ring

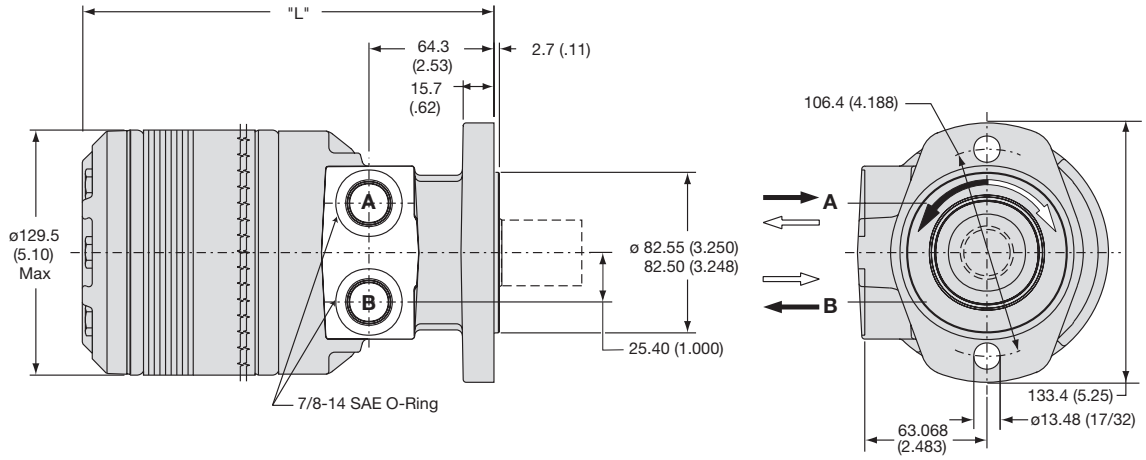

Code AS	disp.	0080	0100	0130	0140	0170	0195	0240	0280	0360	0405	0475
Weight/Gewicht	**kg**	**13.6**	**13.6**	**13.8**	**13.9**	**14.2**	**14.5**	**14.9**	**15.2**	**16.0**	**16.5**	**17.2**
Poids/Peso	(lb)	(29.9)	(30.0)	(30.5)	(30.7)	(31.3)	(31.9)	(32.9)	(33.5)	(35.2)	(36.4)	(37.9)
Length	**"L" mm**	**190.8**	**190.8**	**193.8**	**195.6**	**198.6**	**201.9**	**206.5**	**211.3**	**221.0**	**225.3**	**233.7**
	"L" (in)	(7.51)	(7.51)	(7.63)	(7.70)	(7.82)	(7.95)	(8.13)	(8.32)	(8.70)	(8.87)	(9.20)

Code: BS

SAE B 2-Bolt, 7/8-14 SAE O-Ring

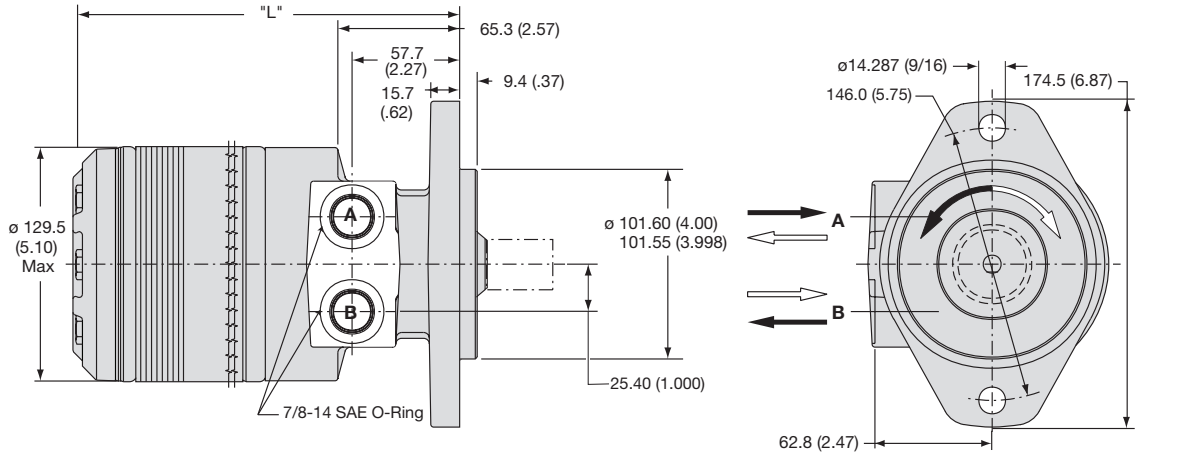

Code BS	disp.	0080	0100	0130	0140	0170	0195	0240	0280	0360	0405	0475
Weight/Gewicht	**kg**	**14.2**	**14.2**	**14.5**	**14.6**	**14.8**	**15.1**	**15.5**	**15.8**	**16.6**	**17.1**	**17.8**
Poids/Peso	(lb)	(31.3)	(31.4)	(31.9)	(32.1)	(32.7)	(33.3)	(34.3)	(34.9)	(36.6)	(37.8)	(39.3)
Length	**"L" mm**	**184.2**	**184.2**	**187.2**	**189.0**	**198.6**	**195.3**	**200.0**	**204.8**	**214.3**	**218.4**	**227.1**
	"L" (in)	(7.25)	(7.25)	(7.37)	(7.44)	(7.56)	(7.69)	(7.87)	(8.06)	(8.44)	(8.60)	(8.94)

English equivalents for metric specifications are shown in ( ).

WARNING
This product can expose you to chemicals including lead and DEHP, which are known to the State of California to cause cancer, and birth defects or other reproductive harm. For more information go to www.p65warnings.ca.gov

Tel: +45 63 12 83 00 | Email: ps@hymatik.com | www.hymatik.com | Hvidkaervej 27a, DK-5250 Odense SV, Denmark

Code: LS

Wheel, Front Brake Nose

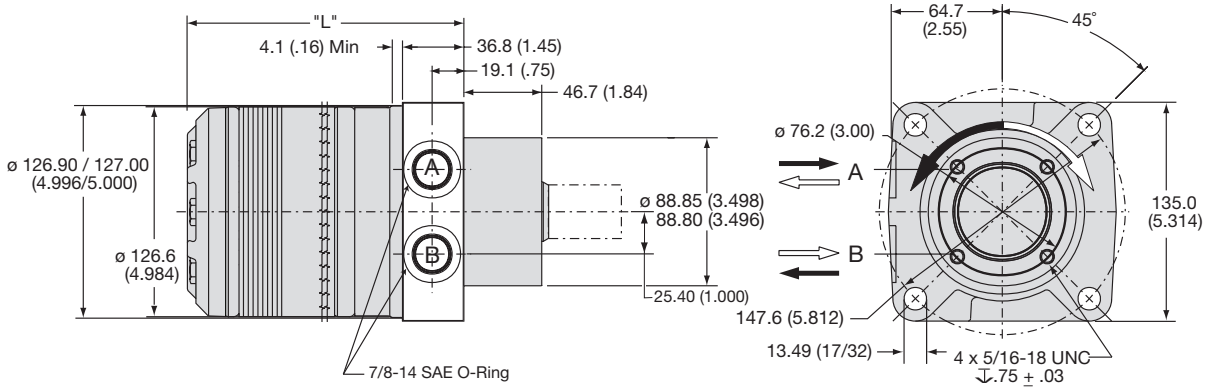

Code LS	disp.	0080	0100	0130	0140	0170	0195	0240	0280	0360	0405	0475
Weight/Gewicht	**kg**	**14.0**	**14.0**	**14.2**	**14.3**	**14.6**	**14.9**	**15.3**	**15.6**	**16.3**	**17.0**	**17.5**
Poids/Peso	(lb)	(30.9)	(30.9)	(31.2)	(31.5)	(32.1)	(32.9)	(33.7)	(34.4)	(35.9)	(37.5)	(38.6)
Length	**"L" mm**	**145.5**	**145.5**	**148.6**	**150.4**	**153.4**	**156.7**	**161.3**	**166.1**	**175.8**	**180.0**	**188.5**
	"L" (in)	(5.73)	(5.73)	(5.85)	(5.92)	(6.04)	(6.17)	(6.35)	(6.54)	(6.92)	(7.08)	(7.42)

Code: MS

Magneto, 7/8-14 SAE O-Ring

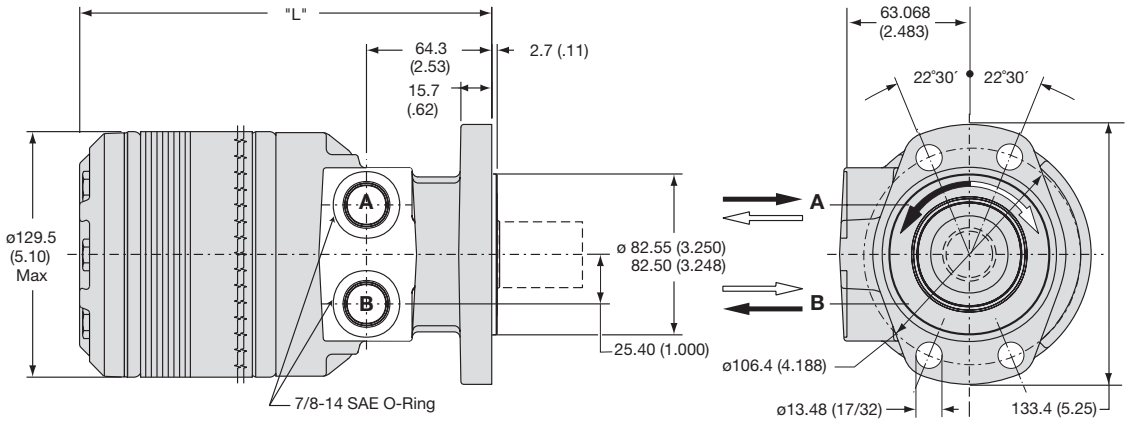

Code MS	disp.	0080	0100	0130	0140	0170	0195	0240	0280	0360	0405	0475
Weight/Gewicht	**kg**	**13.6**	**13.6**	**13.8**	**13.9**	**14.2**	**14.5**	**14.9**	**15.2**	**16.0**	**16.5**	**17.2**
Poids/Peso	(lb)	(29.9)	(30.0)	(30.5)	(30.7)	(31.3)	(31.9)	(32.9)	(33.5)	(35.2)	(36.4)	(37.9)
Length	**"L" mm**	**190.8**	**190.8**	**193.8**	**195.6**	**198.6**	**201.9**	**206.5**	**211.3**	**221.0**	**225.3**	**233.7**
	"L" (in)	(7.51)	(7.51)	(7.63)	(7.70)	(7.82)	(7.95)	(8.13)	(8.32)	(8.70)	(8.87)	(9.20)

English equivalents for metric specifications are shown in ( ).

WARNING
This product can expose you to chemicals including lead and DEHP, which are known to the State of California to cause cancer, and birth defects or other reproductive harm. For more information go to www.p65warnings.ca.gov

Tel: +45 63 12 83 00 | Email: ps@hymatik.com | www.hymatik.com | Hvidkaervej 27a, DK-5250 Odense SV, Denmark

Code: US

Wheel, Standard, 7/8-14 SAE O-Ring

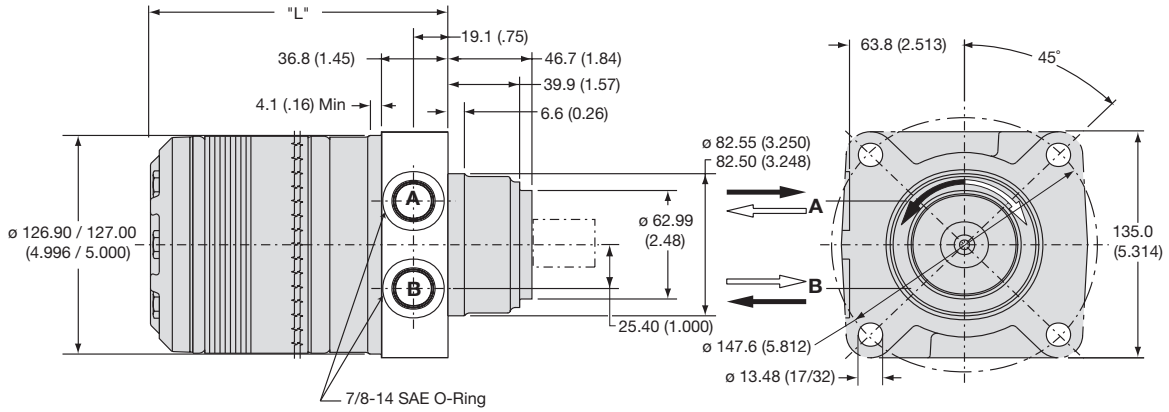

Code US	disp.	0080	0100	0130	0140	0170	0195	0240	0280	0360	0405	0475
Weight/Gewicht	**kg**	**13.9**	**13.9**	**14.2**	**14.3**	**14.5**	**14.8**	**15.2**	**15.5**	**16.3**	**16.9**	**17.5**
Poids/Peso	(lb)	(30.6)	(30.7)	(31.2)	(31.5)	(32.0)	(32.7)	(33.6)	(34.2)	(35.9)	(37.2)	(38.6)
Length	**"L" mm**	**145.5**	**145.5**	**148.6**	**150.4**	**153.4**	**156.7**	**161.3**	**166.1**	**175.8**	**179.8**	**188.5**
	"L" (in)	(5.73)	(5.73)	(5.85)	(5.92)	(6.04)	(6.17)	(6.35)	(6.54)	(6.92)	(7.08)	(7.42)

Code: VB

SAE A 4-Bolt, 7/8-14 SAE Rear Port

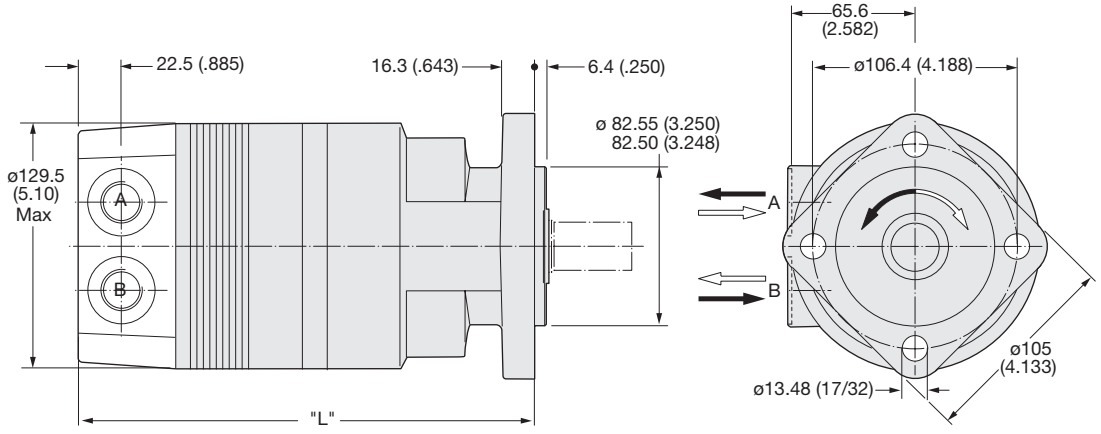

Code VB	disp.	0080	0100	0130	0140	0170	0195	0240	0280	0360	0405	0475
Weight/Gewicht	**kg**	**14.0**	**14.0**	**14.2**	**14.3**	**14.6**	**14.9**	**15.3**	**15.6**	**16.3**	**17.0**	**17.5**
Poids/Peso	(lb)	(30.9)	(30.9)	(31.2)	(31.5)	(32.1)	(32.9)	(33.7)	(34.4)	(35.9)	(37.5)	(38.6)
Length	**"L" mm**	**213.1**	**213.1**	**215.6**	**218.4**	**221.0**	**224.0**	**229.1**	**232.9**	**242.1**	**246.9**	**256.0**
	"L" (in)	(8.39)	(8.39)	(8.49)	(8.60)	(8.70)	(8.82)	(9.02)	(9.17)	(9.53)	(9.72)	(10.08)

English equivalents for metric specifications are shown in ( ).

WARNING
This product can expose you to chemicals including lead and DEHP, which are known to the State of California to cause cancer, and birth defects or other reproductive harm. For more information go to www.p65warnings.ca.gov

Tel: +45 63 12 83 00 | Email: ps@hymatik.com | www.hymatik.com | Hvidkaervej 27a, DK-5250 Odense SV, Denmark

Code: WE

Wheel, Optional, Manifold Rear Port

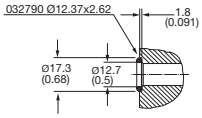

Motor with manifold mount is supplied with 2 o-rings.
Zum Motor mit Universalanschluß werden 2 o-ringe geliefert.
Deux joints toriques sont livrés avec les moteurs a plan de raccordement universel.
Il blocchetto connessioni é corredato da 2 OR.

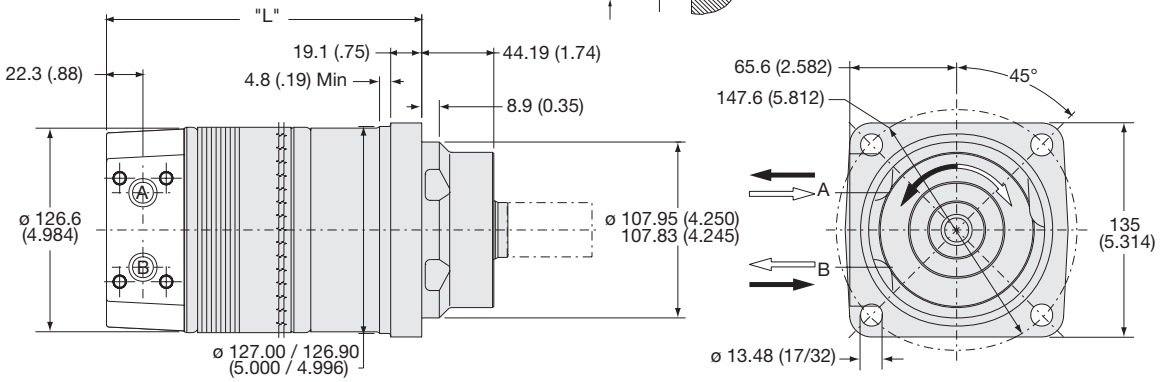

Code WE	disp.	0080	0100	0130	0140	0170	0195	0240	0280	0360	0405	0475
Weight/Gewicht	**kg**	**16.9**	**16.9**	**17.2**	**17.3**	**17.5**	**17.8**	**18.2**	**18.5**	**19.3**	**19.8**	**20.5**
Poids/Peso	(lb)	(37.2)	(37.3)	(37.8)	(38.0)	(38.6)	(39.2)	(40.2)	(40.8)	(42.5)	(43.7)	(45.2)
Length	**"L" mm**	**172.7**	**172.7**	**176.0**	**177.5**	**180.6**	**183.9**	**188.7**	**193.3**	**202.9**	**207.0**	**215.6**
	"L" (in)	(6.80)	(6.80)	(6.93)	(6.99)	(7.11)	(7.24)	(7.43)	(7.61)	(7.99)	(8.15)	(8.49)

Code: DB

Large Wheel Mount, 7/8-14 SAE Rear Port

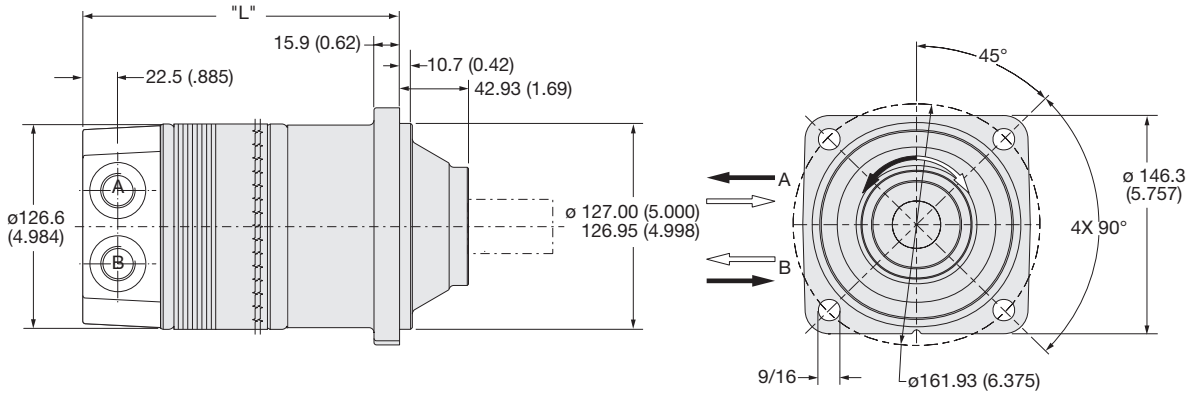

Code DB	disp.	0080	0100	0130	0140	0170	0195	0240	0280	0360	0405	0475
Weight/Gewicht	**kg**	**16.9**	**16.9**	**17.2**	**17.3**	**17.5**	**17.8**	**18.2**	**18.5**	**19.3**	**19.8**	**20.5**
Poids/Peso	(lb)	(37.2)	(37.3)	(37.8)	(38.0)	(38.6)	(39.2)	(40.2)	(40.8)	(42.5)	(43.7)	(45.2)
Length	**"L" mm**	**173.0**	**173.0**	**175.5**	**178.8**	**182.1**	**185.2**	**190.0**	**194.8**	**200.9**	**208.5**	**216.9**
	"L" (in)	(6.81)	(6.81)	(6.91)	(7.04)	(7.17)	(7.29)	(7.48)	(7.67)	(7.91)	(8.21)	(8.54)

English equivalents for metric specifications are shown in ( ).

WARNING
This product can expose you to chemicals including lead and DEHP, which are known to the State of California to cause cancer, and birth defects or other reproductive harm. For more information go to www.p65warnings.ca.gov

Tel: +45 63 12 83 00 | Email: ps@hymatik.com | www.hymatik.com | Hvidkaervej 27a, DK-5250 Odense SV, Denmark

Code: ES

Modified SAE A 6-Bolt, 7/8-14 SAE O-Ring

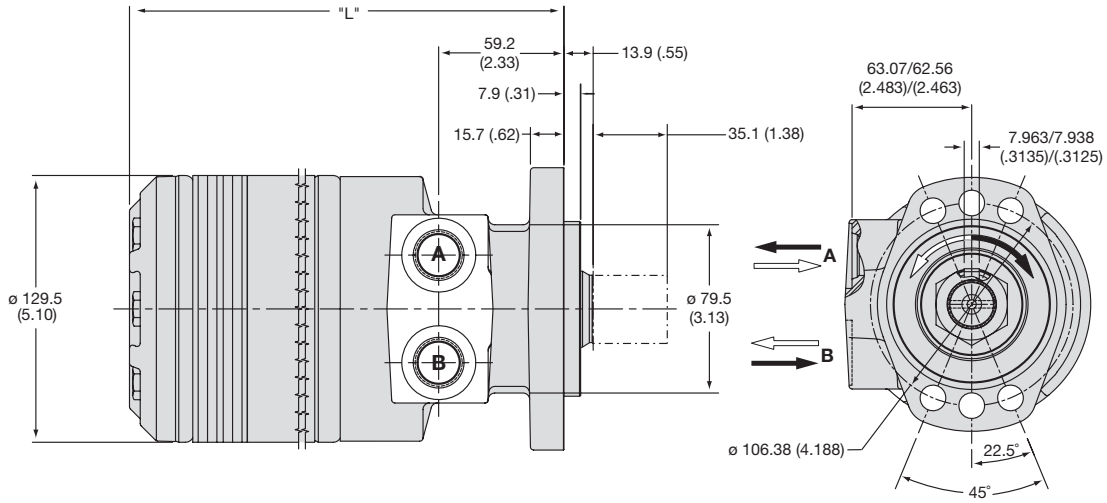

Code ES	disp.	0080	0100	0130	0140	0170	0195	0240	0280	0360	0405	0475
Weight/Gewicht	**kg**	**13.6**	**13.6**	**13.8**	**13.9**	**14.2**	**14.5**	**14.9**	**15.2**	**16.0**	**16.5**	**17.2**
Poids/Peso	(lb)	(29.9)	(30.0)	(30.5)	(30.7)	(31.3)	(31.9)	(32.9)	(33.5)	(35.2)	(36.4)	(37.9)
Length	**"L" mm**	**184.7**	**184.7**	**187.7**	**189.5**	**192.5**	**195.8**	**200.4**	**205.2**	**214.9**	**218.9**	**227.6**
	"L" (in)	(7.27)	(7.27)	(7.39)	(7.46)	(7.58)	(7.71)	(7.89)	(8.08)	(8.46)	(8.62)	(8.96)

English equivalents for metric specifications are shown in ( ).

WARNING
This product can expose you to chemicals including lead and DEHP, which are known to the State of California to cause cancer, and birth defects or other reproductive harm. For more information go to www.p65warnings.ca.gov

Tel: +45 63 12 83 00 | Email: ps@hymatik.com | www.hymatik.com | Hvidkaervej 27a, DK-5250 Odense SV, Denmark

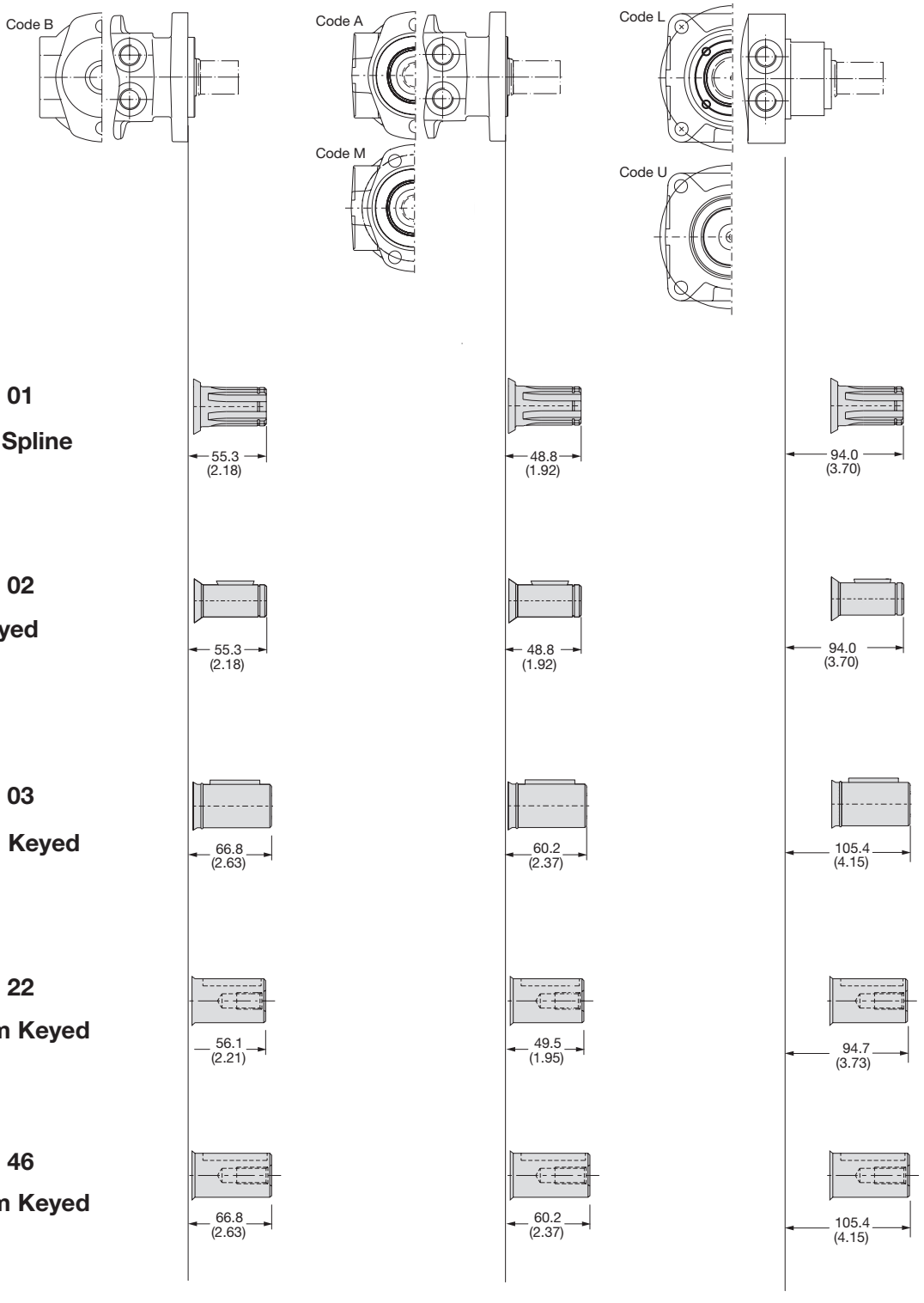

English equivalents for metric specifications are shown in ( ).

007 TF.indd, b

WARNING
This product can expose you to chemicals including lead and DEHP, which are known to the State of California to cause cancer, and birth defects or other reproductive harm. For more information go to www.p65warnings.ca.gov

Tel: +45 63 12 83 00 | Email: ps@hymatik.com | www.hymatik.com | Hvidkaervej 27a, DK-5250 Odense SV, Denmark

Code: 01

1" 6B Spline

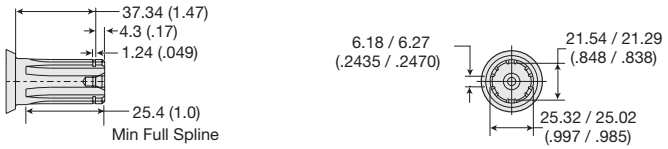

Code: 02

1" Keyed

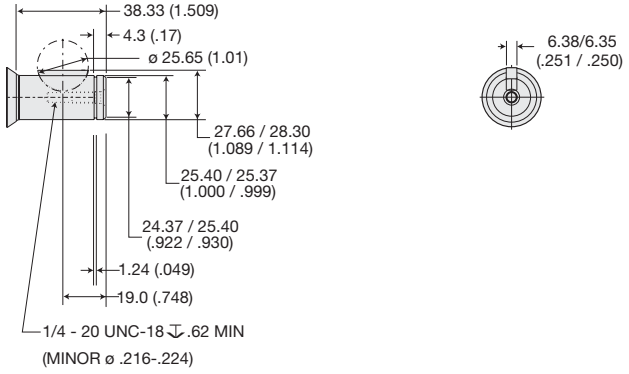

Code: 03

1 1/4" Keyed

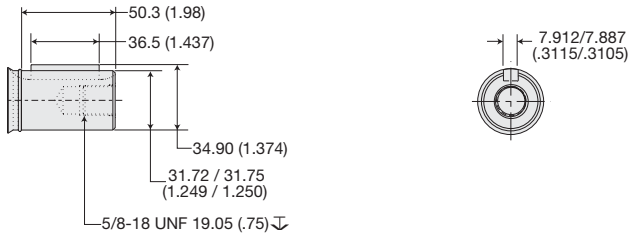

Code: 22

25 mm Keyed

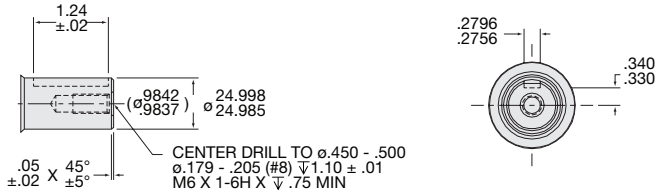

Code: 46

32 mm Keyed

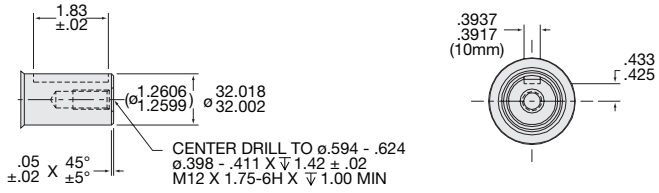

Code: 62

1 1/4" 14 Tooth Spline SAE

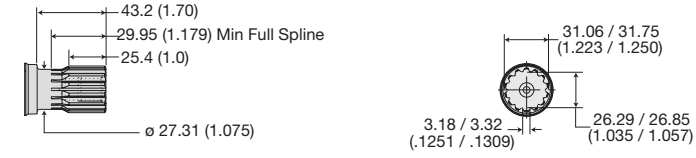

English equivalents for metric specifications are shown in ( ).

WARNING
This product can expose you to chemicals including lead and DEHP, which are known to the State of California to cause cancer, and birth defects or other reproductive harm. For more information go to www.p65warnings.ca.gov

Tel: +45 63 12 83 00 | Email: ps@hymatik.com | www.hymatik.com | Hvidkaervej 27a, DK-5250 Odense SV, Denmark

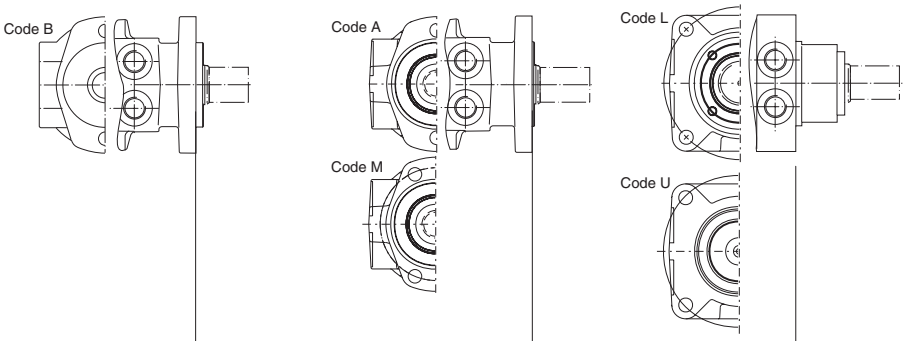

Code: 05

1 1/4" 14 Tooth Spline

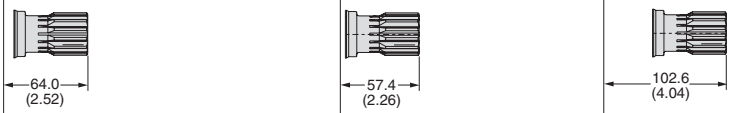

Code: 06

19 Tooth Spline

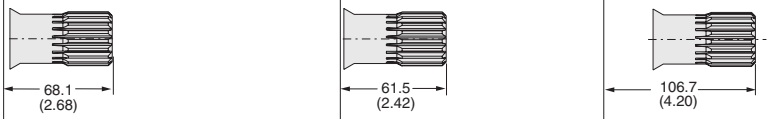

Code: 07

15 Tooth Spline

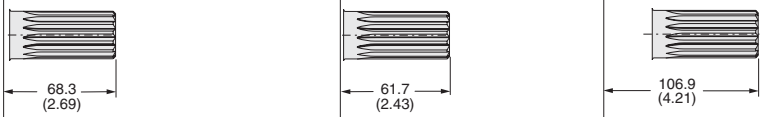

Code: 08

1 1/4" Tapered

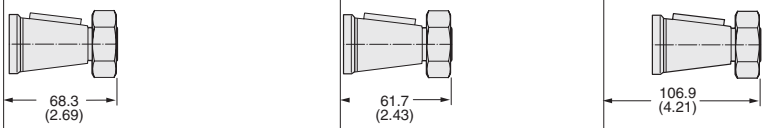

Code: 62

1 1/4" 14 Tooth Spline SAE

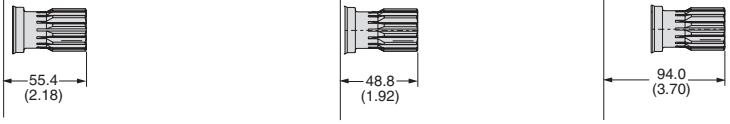

English equivalents for metric specifications are shown in ( ).

⚠ **WARNING**
This product can expose you to chemicals including lead and DEHP, which are known to the State of California to cause cancer, and birth defects or other reproductive harm. For more information go to www.p65warnings.ca.gov

Tel: +45 63 12 83 00 | Email: ps@hymatik.com | www.hymatik.com | Hvidkaervej 27a, DK-5250 Odense SV, Denmark

Code: 05

1 1/4" 14 Tooth Spline

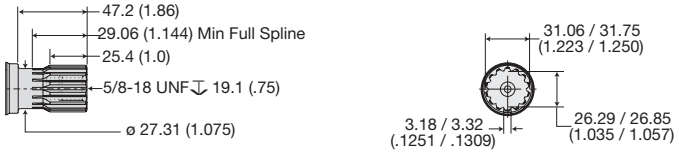

Code: 06

19 Tooth Spline



Code: 07

15 Tooth Spline

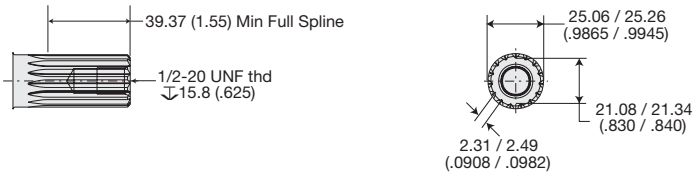

Code: 08

1 1/4" Tapered

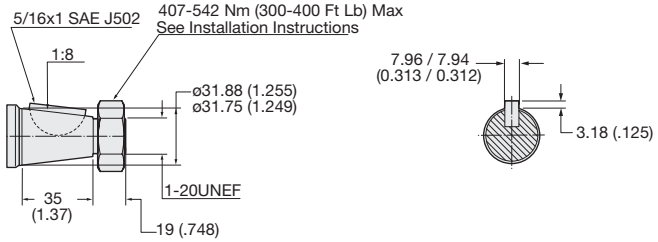

Code: 62

1 1/4" 14 Tooth Spline SAE

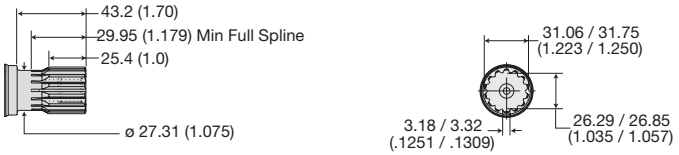

English equivalents for metric specifications are shown in ( ).

WARNING
This product can expose you to chemicals including lead and DEHP, which are known to the State of California to cause cancer, and birth defects or other reproductive harm. For more information go to www.p65warnings.ca.gov

Tel: +45 63 12 83 00 | Email: ps@hymatik.com | www.hymatik.com | Hvidkaervej 27a, DK-5250 Odense SV, Denmark

9 Displacements	(4.9 - 22.2 in³/rev)
9 Schluckvolumen	**81 . . . 364 cm³/rev**
9 Cylindrée	
9 Despazamientos	

	Cont.	**Int.**
Maximum Pressure	(3000 psid)	(4000 psid)
Eingangsdruck	**. . . 207 bar**	**. . . 276 bar**
Pression entrée		
Presion Maxima		

Maximum Oil Flow	(25 gpm)
Schluckstrom	**. . .95 lpm**
Débit d'huile	
Caudal Maximo de Aceite	

Maximum Speed	(749 rpm)
Drehzahl	**749 rpm**
Vitesse de rotation	
Velocidad Maxima	

	Cont.	**Int.**
Maximum Torque	(4502 lb in)	(7029 lb in)
MaxDrehmoment	**509 Nm**	**794 Nm**
Couple		
Torque Maximo		

The Clutch Motor consists of a TF Series motor separated from the output shaft by a face spline coupling. The coupling is held apart by springs, disconnecting the motor from the output shaft, allowing the output shaft to freewheel. When hydraulic pressure is applied to either motor port, the springs separating the coupling are overcome and the motor is coupled to the output shaft.

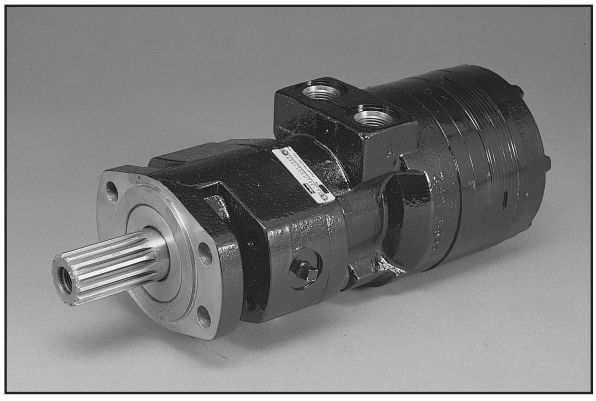

Notes:

1) It is not recommended to engage the clutch while the output shaft is rotating.
2) Clutch may not disengage if there is residual torque on output shaft when pressure is lost at motor ports.
3) Minimum pressure to engage clutch - 200 PSI.
4) To assure clutch disengagement, pressure at motor ports must be below 60 PSI.
5) Shaft will freewheel when pressure is lost at motor ports whether by design or inadvertently. The possibility of unplanned freewheeling should be considered in the design of the system.
6) If applicable, contact factory for radial load capacity.

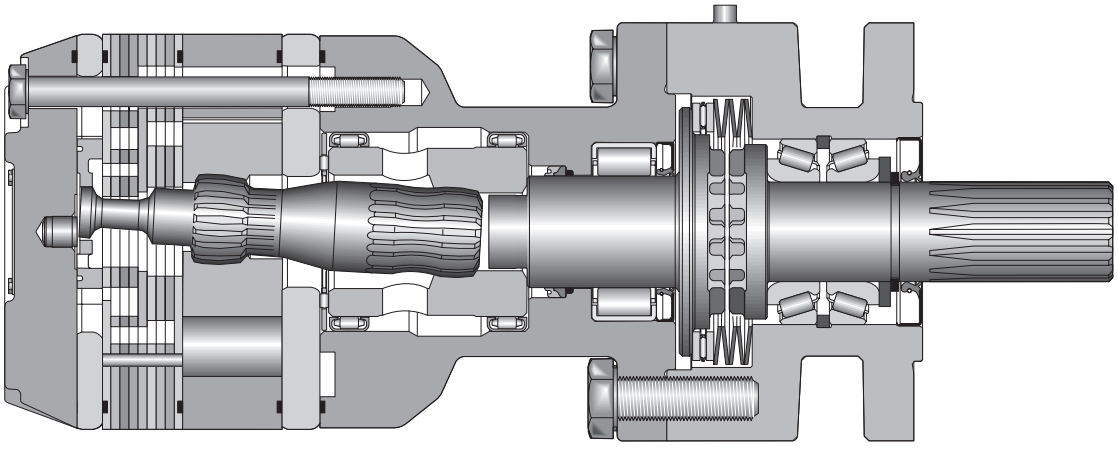

Ordering Information / Bestellschlüssel
System de Commande / Imformacion para pedidos

LSHT Torqmotors™ and Nichols™ Motors
TF Clutch Series

TF — Series

XXXX — Displacement / Schluckvolumen / Cylindrée / Desplazamiento

Code	cm³/tr cm³/giro cm³/U	in³/rev
0080	81 /	4.9
0100	100 /	6.1
0130	128 /	7.8
0140	141 /	8.6
0170	169 /	10.3
0195	197 /	12.0
0240	238 /	14.5
0280	280 /	17.1
0365	364 /	22.2

GS — Mounting/Ports / Gehäuse/Anschluß / Carter/Plan de raccordement / Montaje/Lumbreras

Code	Mounting/Ports
GS	Magneto, 7/8-14 SAE 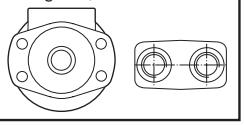

XX — Shaft / Welle / Arbre / Eje

Code	Shaft
03	1 1/4" Keyed 
05	1 1/4" 14 Tooth Spline 
Custom Order 08	1.25" Tapered,1-20 Thread 

0 — Rotation / Drehrichtung / Direction de rotation / Rotacion

Code	Rotation
0	Standard 
1	Reverse Timed Manifold 

Shaded areas indicate custom order components. Standard pricing and delivery terms may not apply to these components. Please refer to the price list for details, or consult your Parker Pump Motor division Sales Resource.

WARNING
This product can expose you to chemicals including lead and DEHP, which are known to the State of California to cause cancer, and birth defects or other reproductive harm. For more information go to www.p65warnings.ca.gov

Parker Hannifin Corporation
Pump & Motor Division
Greeneville, Tennessee, USA

Tel: +45 63 12 83 00 | Email: ps@hymatik.com | www.hymatik.com | Hvidkaervej 27a, DK-5250 Odense SV, Denmark

XXXX

Options
Opciones

Code	Options
AAAA	"Standard", Black Paint (045134), Paint area all over except front and rear pilot and mounting flanges and shaft
AAAB	"Standard", No Paint
AAAC	"Standard", Double Paint (045247), Paint area all over except front and rear pilot and mounting flanges and shaft
AABJ	Free Running Rotor Set, Black paint (045134), Paint area all over except front and rear pilot and mounting flanges and shaft
AABT	Black paint (045134), Paint area all over except front and rear pilot and mounting flanges and shaft, No shaft hardware
AAFA	Fluorocarbon (Viton) Seals, High Temp Commutator Seal, No paint
AAFW	Fluorocarbon (Viton) Seals, High Temp Commutator Seal, Black paint (045134), Paint area all over except front and rear pilot and mounting flanges and shaft
AAJH	Fluorocarbon (Viton) Seals, High Temp Commutator Seal, Black paint (045134), Paint area all over except front and rear pilot and mounting flanges and shaft, No shaft hardware
AAJL	No paint, No shaft hardware
AAUP	Fluorocarbon (Viton) Seals, High Temp Commutator Seal, No Paint, No shaft Hardware
AAVE	Free Running Rotor Set, Fluorocarbon (Viton) Seals, High Temp Commutator Seal, Black Paint (045134), Paint area all over except front and rear pilot and mounting flanges and shaft
ABCW	Fluorocarbon (Viton) Seals, High Temperature Commutator Seal, Bidirectional shuttle (.062 Orifice) (11:00*), Black Paint (045134), Paint area all over except front and rear pilot and mounting flanges and shaft, No Shaft Hardware
ABCZ	Fluorocarbon (Viton) Seals, Double paint (045247), Paint area all over except front and rear pilot and mounting flanges and shaft
BBGV	Fluorocarbon (Viton) Seals, High Temperature Commutator Seal, 1015 PSI Int Bidirectional Relief, Black Paint (045134), Paint area all over except front and rear pilot and mounting flanges and shaft, No Shaft Hardware
BBGW	Fluorocarbon (Viton) Seals, High Temperature Commutator Seal, 1450 PSI Int Bidirectional Relief, Black Paint (045134), Paint area all over except front and rear pilot and mounting flanges and shaft, No Shaft Hardware
BBGX	No Shaft Hardware, Fluorocarbon (Viton) Seals, High Temperature Commutator Seal, 2031 PSI Int Bidirectional Relief, Black Paint (045134), Paint area all over except front and rear pilot and mounting flanges and shaft, No Shaft Hardware
BBGY	Fluorocarbon (Viton) Seals, High Temperature Commutator Seal, 3046 PSI Int Bidirectional Relief, Black Paint (045134), Paint area all over except front and rear pilot and mounting flanges and shaft, No Shaft Hardware
BBHC	Fluorocarbon (Viton) Seals, High Temperature Commutator Seal, 725 PSI Int Bidirectional Relief, Black Paint (045134), Paint area all over except front and rear pilot and mounting flanges and shaft, No Shaft Hardware
BBHD	Fluorocarbon (Viton) Seals, High Temperature Commutator Seal, 2538 PSI Int Bidirectional Relief, Black Paint (045134), Paint area all over except front and rear pilot and mounting flanges and shaft, No Shaft Hardware

Shaded areas indicate custom order components. Standard pricing and delivery terms may not apply to these components. Please refer to the price list for details, or consult your Parker Pump Motor division Sales Resource.

Code: GS

4 Bolt Magneto, Clutch / 7/8-14 SAE

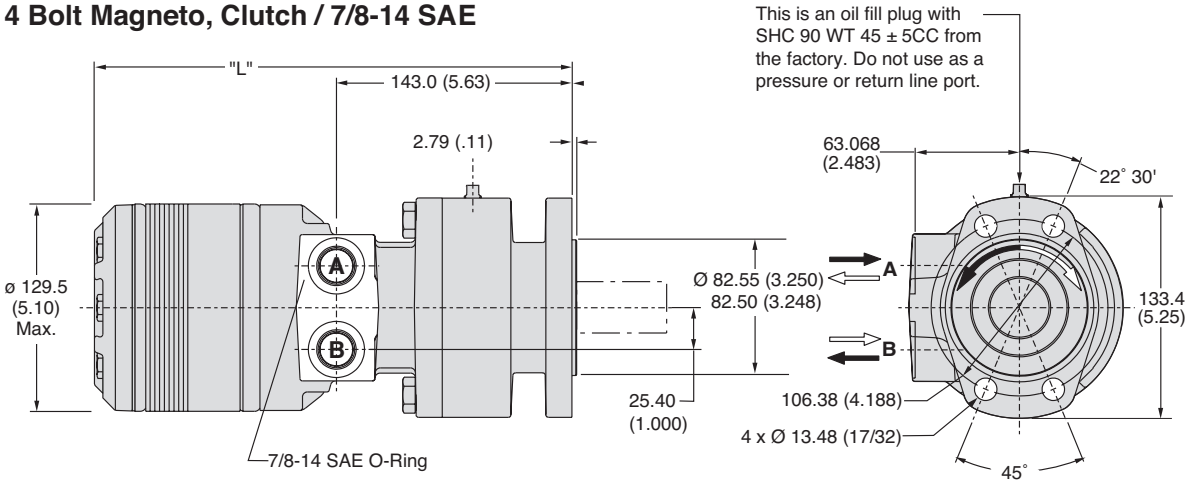

Code GS	disp.	0080	0100	0130	0140	0170	0195	0240	0280	0365
Weight/Gewicht	**kg**	**17.9**	**17.9**	**18.1**	**18.2**	**18.5**	**18.8**	**19.2**	**19.5**	**20.3**
Poids/Peso	(lb)	(39.3)	(39.4)	(39.9)	(40.1)	(40.7)	(41.3)	(42.3)	(42.9)	(44.6)
Length	**"L" mm**	**270**	**270**	**273**	**275**	**278**	**281**	**286**	**290**	**300**
	"L" (in)	(10.61)	(10.61)	(10.73)	(10.80)	(10.92)	(11.05)	(11.23)	(11.42)	(11.80)

For performance data curves, see TF section.

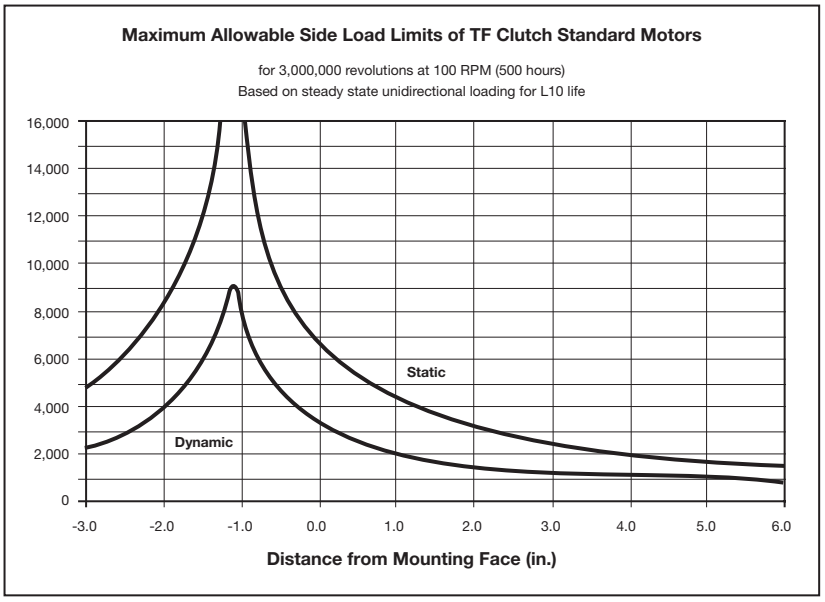

English equivalents for metric specifications are shown in ( ).

WARNING
This product can expose you to chemicals including lead and DEHP, which are known to the State of California to cause cancer, and birth defects or other reproductive harm. For more information go to www.p65warnings.ca.gov

Tel: +45 63 12 83 00 | Email: ps@hymatik.com | www.hymatik.com | Hvidkaervej 27a, DK-5250 Odense SV, Denmark

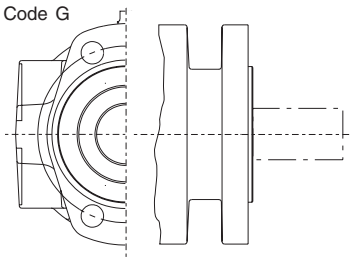

Code: 03

1 1/4" Keyed

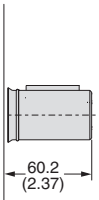

Code: 05

1 1/4" 14 Tooth Spline

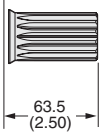

Code: 03

1 1/4" Keyed

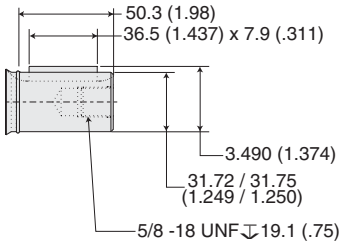

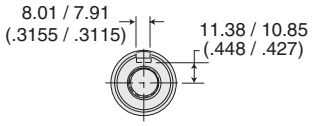

Code: 05

1 1/4"14 Tooth Spline

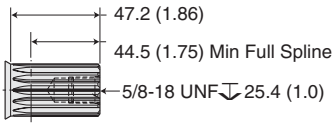

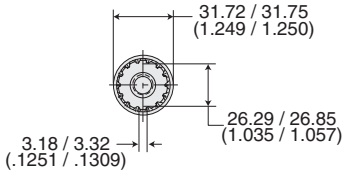

English equivalents for metric specifications are shown in ( ).

WARNING
This product can expose you to chemicals including lead and DEHP, which are known to the State of California to cause cancer, and birth defects or other reproductive harm. For more information go to www.p65warnings.ca.gov

Tel: +45 63 12 83 00 | Email: ps@hymatik.com | www.hymatik.com | Hvidkaervej 27a, DK-5250 Odense SV, Denmark

⚠ **WARNING**
This product can expose you to chemicals including lead and DEHP, which are known to the State of California to cause cancer, and birth defects or other reproductive harm. For more information go to www.p65warnings.ca.gov

Parker Hannifin Corporation
Pump & Motor Division
Greeneville, Tennessee, USA

Tel: +45 63 12 83 00 | Email: ps@hymatik.com | www.hymatik.com | Hvidkaervej 27a, DK-5250 Odense SV, Denmark

11 Displacements	(4.9 - 29.1 in³/rev)
11 Schluckvolumen	**81 . . . 477 cm³/rev**
11 Cylindrée	
11 Despazamientos	

	Cont.	**Int.**
Maximum Pressure	(3000 psid)	(4000 psid)
Eingangsdruck	**. . . 207 bar**	**. . . 276 bar**
Pression entrée		
Presion Maxima		

Maximum Oil Flow	(25 gpm)
Schluckstrom	**. . . 95 lpm**
Débit d'huile	
Caudal Maximo de Aceite	

Maximum Speed	**(749 rpm)**
Drehzahl	**749 rpm**
Vitesse de rotation	
Velocidad Maxima	

	Cont.	**Int.**
Maximum Torque	(6027 lb in)	(8106 lb in)
MaxDrehmoment	**681 Nm**	**916 Nm**
Couple		
Torque Maximo		

Maximum Side Load at Key	(3597 lb)
Seitenlast	**. . . 16000 N**
Charges latèrales	
Carga Maxima Lateral	

A Mechanical Brake Motor for Tough Applications

Parker's DF Series brake motors consists of a mechanical drum brake mounted integrally to our rugged TF Series LSHT hydraulic motor. The compact size, reliable holding capacity and ease of installation make this motor with parking brake the ideal choice for the propulsion systems on many turf, agricultural and other vehicles.

The brake is available with either vertical or horizontally applied levers. The vertical style has fixed brake pads, while the horizontal version has floating brake pads that can be adjusted as required over the life of the brake. Both versions are for static applications only.



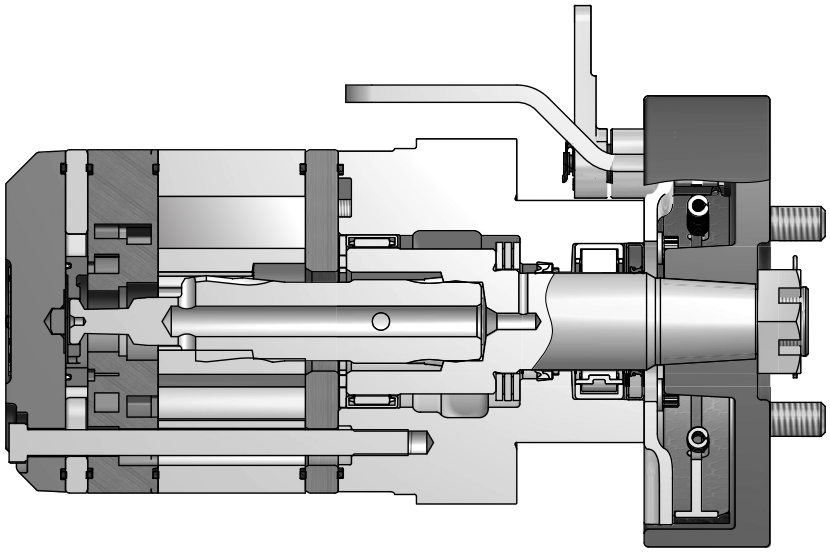

⚠ **WARNING**
This product can expose you to chemicals including lead and DEHP, which are known to the State of California to cause cancer, and birth defects or other reproductive harm. For more information go to www.p65warnings.ca.gov

DF	XXXX	XS	X	X
Series	Displacement Schluckvolumen Cylindrée Desplazamiento	Mounting/Ports Gehäuse/Anschluß Carter/Plan de raccordement Montaje/Lumbreras	Drum Type Trommelbremse Tipo de tambor Genre de tambour	Shaft Welle Arbre Eje

Code	cm^3/U cm^3/tr $cm^3/giro$ in^3/rev
0140	141 / 8.6
0170	169 / 10.3
0195	195 / 11.9
0240	238 / 14.5
0280	280 / 17.1
0310	310 / 18.9
0335	337 / 20.6
0405	405 / 24.7
0475	477 / 29.1

Code	Shaft
8	1 1/4" Tapered 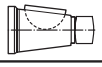

Code	Mounting/Ports - Horizontal Lever
US	Wheel Mt. w/Brake Lever @ 270° / 7/8-14 SAE 
VS	Wheel Mt. w/Brake Lever @ 90° / 7/8-14 SAE 
WS	Wheel Mt. w/Brake Lever @ 180° / 7/8-14 SAE 

Code	Drum Type
A	 4 Bolt
B	 5 Bolt

Shaded areas indicate custom order components. Standard pricing and delivery terms may not apply to these components. Please refer to the price list for details, or consult your Parker Pump Motor division Sales Resource.

WARNING
This product can expose you to chemicals including lead and DEHP, which are known to the State of California to cause cancer, and birth defects or other reproductive harm. For more information go to www.p65warnings.ca.gov

Tel: +45 63 12 83 00 | Email: ps@hymatik.com | www.hymatik.com | Hvidkaervej 27a, DK-5250 Odense SV, Denmark

0

Rotation
Drehrichtung
Direction de rotation
Rotacion

Code	Front Port Rotation
0	Standard 
1	Reverse Timed Manifold 

XXXX

Options
Opciones

Code	Options
AAAA	"Standard", Black Paint (045134), Paint area all over except front and rear pilot and mounting flanges and shaft
AAAB	"Standard", No Paint
AAAC	"Standard", Double Paint (045247), Paint area all over except front and rear pilot and mounting flanges and shaft
AABJ	Free Running Rotor Set, Black paint (045134), Paint area all over except front and rear pilot and mounting flanges and shaft
AAFA	Fluorocarbon (Viton) Seals, High Temp Commutator Seal, No paint
AAFW	Fluorocarbon (Viton) Seals, High Temp Commutator Seal, Black paint (045134), Paint area all over except front and rear pilot and mounting flanges and shaft
AAVE	Free Running Rotor Set, Fluorocarbon (Viton) Seals, High Temp Commutator Seal, Black Paint (045134), Paint area all over except front and rear pilot and mounting flanges and shaft
ABCZ	Fluorocarbon (Viton) Seals, Double paint (045247), Paint area all over except front and rear pilot and mounting flanges and shaft

Shaded areas indicate custom order components. Standard pricing and delivery terms may not apply to these components. Please refer to the price list for details, or consult your Parker Pump Motor division Sales Resource.

WARNING
This product can expose you to chemicals including lead and DEHP, which are known to the State of California to cause cancer, and birth defects or other reproductive harm. For more information go to www.p65warnings.ca.gov

Tel: +45 63 12 83 00 | Email: ps@hymatik.com | www.hymatik.com | Hvidkaervej 27a, DK-5250 Odense SV, Denmark

Vertical Lever

Holding capacity is 497 Nm (4,400 in lbs) with 68 Nm (600 in lbs) of input torque at lever pivot. Brake capacities are typical for non-burnished brake shoe. OEM testing required to verify actual field conditions.

Das maximale Bremsmoment von 497 Nm (4400 in lbs) wird erreicht durch Betätigung des Bremshebels mit 68 Nm (600 in lbs).
Genannte Einsatzdaten beziehen sich auf Neuprodukte. Die Eignung der Geräte ist vom Anwender für den jeweiligen Einsatz individuell zu prüfen.

La puissance de maintien est de 497 Nm (4400 pouces-livres) avec couple d'entrée au pivot du levier de 68 Nm (600 pouces-livres). Les puissances de freinage sont typiques pour des sabots de frein non brunis. Les essais imposés par le constructeur d'origine exigent la vérification des conditions réelles sur place.

Capacidad de retención de 497 N-m (4.400 libras-pulgada) con 69 N-m (600 libras-pulgada) de torque de entrada en el brazo de articulación. Los valores de capacidad de frenado son típicas para zapatas de freno no bruñidas. Para fabricantes de equipos originales se deben efectuar pruebas bajo condiciones reales de funcionamiento.

Horizontal Lever

Brake Torque and Travel of 3.72 inch Horizontal Lever

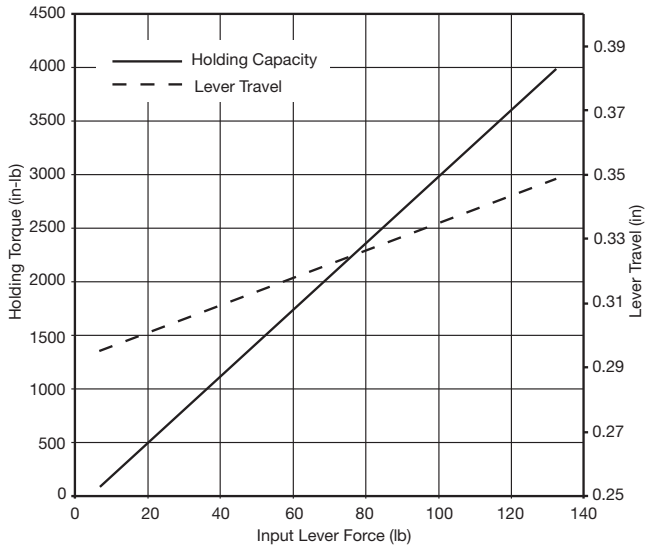

⚠ **WARNING**
This product can expose you to chemicals including lead and DEHP, which are known to the State of California to cause cancer, and birth defects or other reproductive harm. For more information go to www.p65warnings.ca.gov

Tel: +45 63 12 83 00 | Email: ps@hymatik.com | www.hymatik.com | Hvidkaervej 27a, DK-5250 Odense SV, Denmark

Wheel Mount/Radnabengehäuse
Monture à roue/ Montaje de rueda

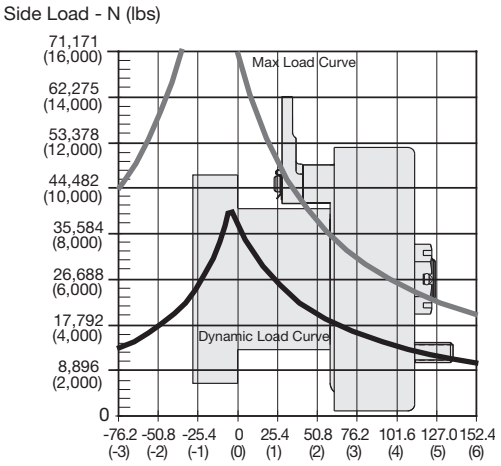

The dynamic side load curve is based on uni-directional steady state loads for L_{10} bearing life at 3 x 10^6 revolutions.
Die zulässige auslegbare radiale Wellenbelastungskurve ist unter ruhenden, einseitig statisch gerichteten Lastverhältnissen auf eine L_{10} Lebensdauer mit 3 x 10^6 Umdrehungen kalkuliert.
La courbe de charge latérale permise se base sur des charges unidirectionnelles en régime permanent pour le roulement L_{10} à 3 x 10^6 révolutions.
La curva de valores admisibles de carga lateral está basada en cargas constantes para cojinetes L_{10} a 3 x 10^6 revoluciones.

The maximum load curve is defined by bearing static load capacity. This curve should not be exceeded at any time including shock loads.
Die maximale radiale Wellenbelastungskurve ist definiert als maximale statische Last ohne Drehzahl. Sie gilt als Grenze und sollte keinesfalls überschritten werden.
La courbe de charge maximale est définie par la capacité de charge statique portante. Cette courbe ne devrait être dépassée en aucun moment y compris pour les charges par à-coups.
La curva de carga máxima queda definida por la capacidad de carga estática del cojinete. No se deben superar los valores de esta curva, ni siquiera con cargas provisorias de impacto.

Equation to Calculate the Expected Radial Bearing Life
Gelichung zur Ermittlung der Lagerlebensdauer

Equation to calculate the dynamic bearing life for a given load:
Bestimmung der erlaubten radialen Wellenbelastung mit vorgegebener Last

Use F_a, F_b and S in equation to determine hours of L_{10} bearing life.
Die Lebensdauer in Stunden ergibt sich durch einsetzen von F_a, F_b, und S in die nachstehende Formel.

$$L = \frac{3 \times 10^6}{60 \times S} \left\{ \frac{F_a}{F_b} \right\}^{3.33}$$

Where / Mit:

S = Shaft Speed RPM / Abtriebswellendrehzahl in min^{-1}
L = Life In Hours / Lebensdauer in Stunden
F_a = Dynamic side load defined by above curve at a distance from mounting flange. / Erlaubte radiale Wellenbelastung als Function der Laenge
F_b = Application side load. / Anwendungsseitige Wellenbelastung

Note: Calculations are based on L_{10} bearing life per ISO 281.
Auslegung basiert auf einer L_{10} Lenbendauer nach ISO 281

WARNING
This product can expose you to chemicals including lead and DEHP, which are known to the State of California to cause cancer, and birth defects or other reproductive harm. For more information go to www.p65warnings.ca.gov

Tel: +45 63 12 83 00 | Email: ps@hymatik.com | www.hymatik.com | Hvidkaervej 27a, DK-5250 Odense SV, Denmark

Code: AS - Vertical Lever

Wheel Mount w/Brake Lever / 7/8-14 SAE O-Ring

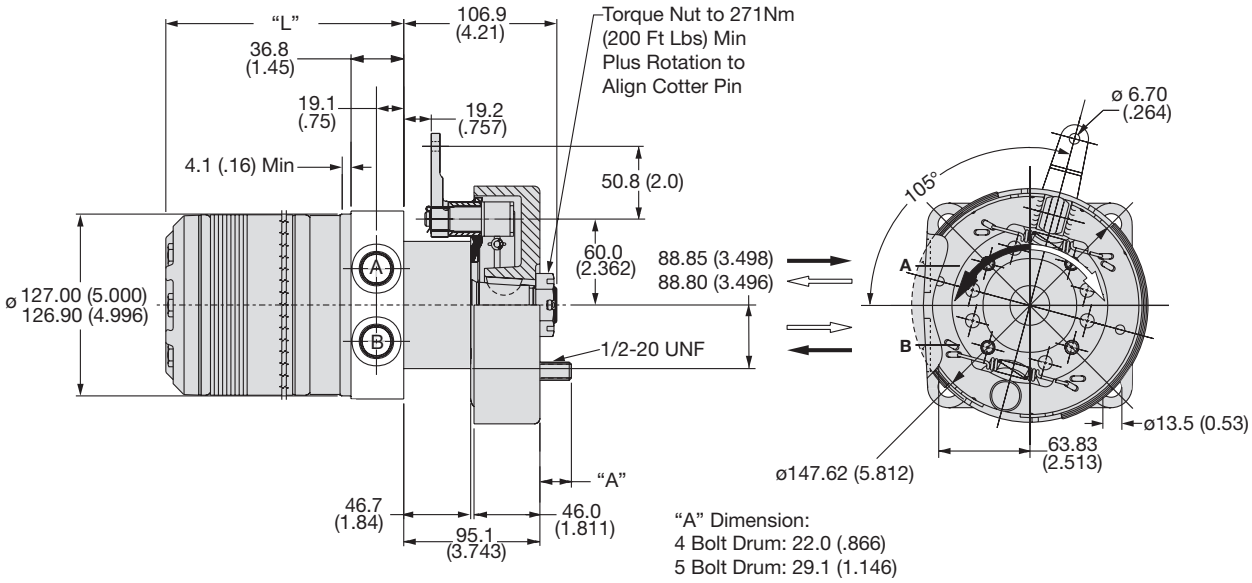

Note:

1. Brake Acuation Lever can be positioned in 12.00° increments from that shown.
   Bremshebel ist kreisförmig in Sigmenten von 12.00 ° positionierbar.
   Le levier de commande du frein peut être positionné à des échelons d'accroissement de 12,00° de ce qui est montré.
   El brazo de actuación del freno se puede colocar en avances de 12,00 grados con respecto a la posición mostrada.
2. Brake Acuation Lever is shipped unattached, secured with wire or tiewrap to assembly.
   Hebel ist anbei. Endmontage erforderlich.
   Le levier de commande du frein est expédié sous forme détachée; il est attaché à l'ensemble avec du fil ou du ruban.
   El brazo de actuación del freno se suministra suelto, sin conexión, sólo atado provisoriamente al mecanismo.

Code AS	**disp.**	**0080**	**0100**	**0130**	**0140**	**0170**	**0195**	**0240**	**0280**	**0360**	**0405**	**0475**
Weight/Gewicht	**kg**	**18.0**	**18.1**	**18.3**	**18.4**	**18.7**	**19.0**	**19.4**	**19.7**	**20.4**	**21.0**	**21.7**
Poids/Peso	(lb)	(39.74)	(39.84)	(40.34)	(40.64)	(41.14)	(41.84)	(42.74)	(43.34)	(45.04)	(46.34)	(47.74)
Length	**"L" mm**	**145.5**	**145.5**	**145.6**	**150.4**	**153.4**	**156.7**	**161.3**	**166.1**	**175.8**	**179.8**	**188.5**
	"L" (in)	(5.73)	(5.73)	(5.85)	(5.92)	(6.04)	(6.17)	(6.35)	(6.54)	(6.92)	(7.08)	(7.42)

For performance data curves, see TF section.

English equivalents for metric specifications are shown in ( ).

009 DF.indd, b

WARNING
This product can expose you to chemicals including lead and DEHP, which are known to the State of California to cause cancer, and birth defects or other reproductive harm. For more information go to www.p65warnings.ca.gov

Tel: +45 63 12 83 00 | Email: ps@hymatik.com | www.hymatik.com | Hvidkaervej 27a, DK-5250 Odense SV, Denmark

Code: US - Horizontal Lever

Wheel Mount w/Brake Lever / 7/8-14 SAE O-Ring

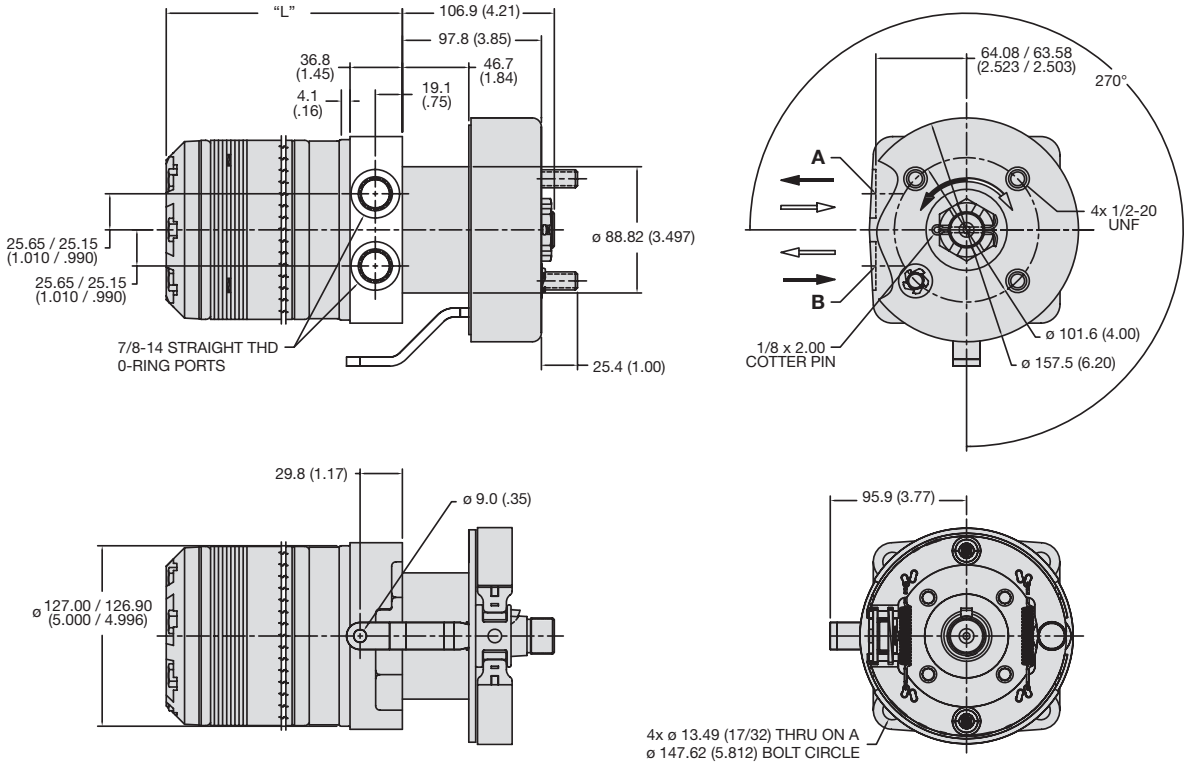

Note:
Brake Acuation Lever can be positioned in 90° increments from that shown.
Bremshebel ist kreisförmig in Sigmenten von 90° positionierbar.
Le levier de commande du frein peut être positionné à des échelons d'accroissement de 90° de ce qui est montré.
El brazo de actuación del freno se puede colocar en avances de 90° grados con respecto a la posición mostrada.

Code US	**disp.**	**0140**	**0170**	**0195**	**0240**	**0280**	**0310**	**0335**	**0405**	**0475**	**0530**	**0625**	**0785**	**0960**
Weight/Gewicht	**kg**	**14.6**	**14.8**	**15.1**	**15.5**	**15.9**	**16.1**	**16.3**	**16.9**	**17.5**	**18.3**	**19.0**	**20.5**	**22.2**
Poids/Peso	(lb)	(41.3)	(41.8)	(42.4)	(43.2)	(44.1)	(44.6)	(44.9)	(46.3)	(47.7)	(49.4)	(50.9)	(54.4)	(58.1)
Length	**"L" mm**	**150.3**	**153.4**	**156.7**	**161.3**	**166.1**	**169.7**	**172.5**	**179.8**	**188.5**	**194.8**	**204.2**	**223.3**	**242.3**
	"L" (in)	(5.92)	(6.04)	(6.17)	(6.35)	(6.54)	(6.68)	(6.79)	(7.08)	(7.42)	(7.67)	(8.04)	(8.79)	(9.54)

For performance data curves, see TF section.

English equivalents for metric specifications are shown in ( ).

WARNING
This product can expose you to chemicals including lead and DEHP, which are known to the State of California to cause cancer, and birth defects or other reproductive harm. For more information go to www.p65warnings.ca.gov

Tel: +45 63 12 83 00 | Email: ps@hymatik.com | www.hymatik.com | Hvidkaervej 27a, DK-5250 Odense SV, Denmark

Drum Type/Trommelbremse/ Tipo de tambor/ Genre de Tambour

Code: A

4 Bolt

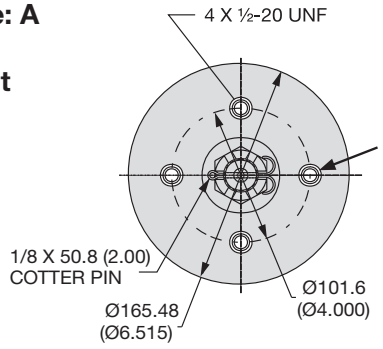

Code: B

5 Bolt

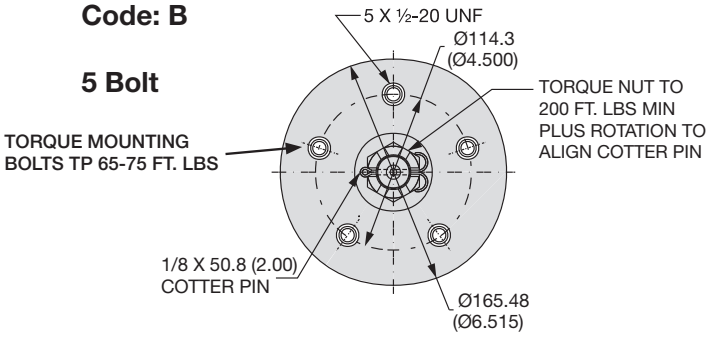

Shafts / Abtriebswellen Arbre / Ejes

Code: 8

1 1/4" Taper

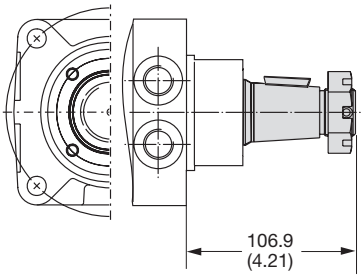

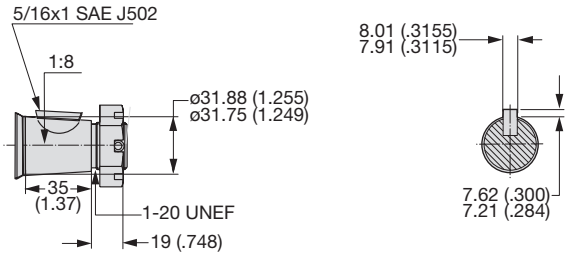

English equivalents for metric specifications are shown in ( ).

009 DF.indd, b

Tel: +45 63 12 83 00 | Email: ps@hymatik.com | www.hymatik.com | Hvidkaervej 27a, DK-5250 Odense SV, Denmark

7 Displacements	(8.6 to 22.2 in³/rev)
7 Schluckvolumen	**140 . . . 364 cm³/rev**
7 Cylindrée	
7 Despazamientos	

	Cont.	Int.
Maximum Pressure	(2750 psid)	(3500 psid)
Eingangsdruck	**. . . 190 bar**	**. . . 241 bar**
Pression entrée		
Presion Maxima		

Maximum Oil Flow	(25 gpm)
Schluckstrom	**. . . 95 lpm**
Débit d'huile	
Caudal Maximo de Aceite	

Maximum Speed	(613 rpm)
Drehzahl	**613 rpm**
Vitesse de rotation	
Velocidad Maxima	

	Cont.	Int.
Maximum Torque	(8,650 lb in)	(10,300 lb in)
MaxDrehmoment	**977 Nm**	**1164 Nm**
Couple		
Torque Maximo		

Exceptional Power Density and Durability

The heart of the new compact Torqmotor™ is the strongest drive train in its class. Coupled with this extra heavy-duty drive train are the high efficiencies and low speed performance for which the Parker Torqmotor™ is known. As with all Torqmotors™, high speed valving and full flow drive train lubrication are standard. Case drains are not required. Roller vanes and a sealed commutator maintain high efficiencies and provide smooth low speed performance.



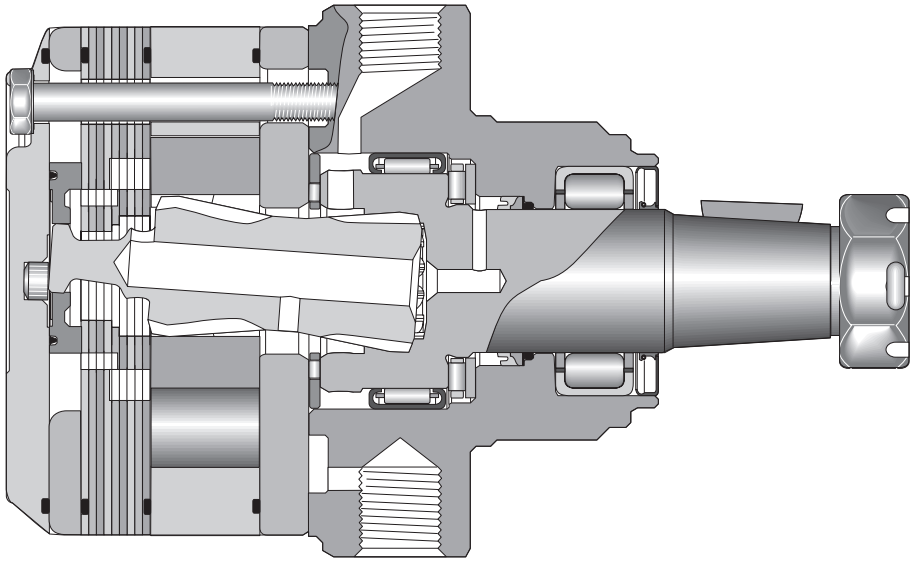

⚠ **WARNING**
This product can expose you to chemicals including lead and DEHP, which are known to the State of California to cause cancer, and birth defects or other reproductive harm. For more information go to www.p65warnings.ca.gov

Ordering Information / Bestellschlüssel
System de Commande / Imformacion para pedidos

LSHT Torqmotors™ and Nichols™ Motors
TL Series / Serie / Série
HY13-1590-011/US,EU

TL	XXXX	XX	XX	X	XXXX
Series	Displacement Schluckvolumen Cylindrée Desplazamiento	Mounting/Ports Gehäuse/Anschluß Carter/Plan de raccordement Montaje/Lumbreras	Shaft Welle Arbre Eje	Rotation Drehrichtung Direction de rotation Rotacion	Options Opciones

Code	cm³/tr cm³/giro cm³/U	in³/rev
0140	141	8.6
0170	169	10.3
0195	195	11.9
0240	238	14.5
0280	280	17.1
0310	310	18.9
0360	364	22.2

Code	Mounting/Ports
LS	Wheel, Front Brake Nose, 7/8-14 SAE 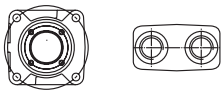
US	Wheel, Standard, 7/8-14 SAE 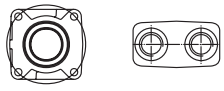
Custom Order TS	Wheel, 7/8-14 SAE 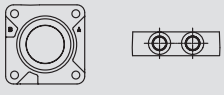

Code	Front Port Rotation
0	Standard 
1	Reverse Timed Manifold 

Code	Shaft
08	1 1/4" Tapered 

Code	Options
AAAA[2]	"Standard", Black Paint
AAAB	"Standard", No Paint
AAAC[2]	"Standard", Double Paint
AABJ[2]	Free Running Rotor Set, Black Paint
AABT[1,2]	No Nut, Black Paint
AAFA	Fluorocarbon Seals, High Temp Commutator Seal, No Paint
AAFW[2]	Fluorocarbon Seals, High Temp Commutator Seal, Black Paint
AAJH[1,2]	Fluorocarbon Seals, High Temp Commutator Seal, Black Paint
AAJL[1]	No Nut, No paint
AAUP[1]	Fluorocarbon Seals, High Temp Commutator Seal, No Nut, No Paint
AAVE[2]	Free Running Rotor Set, Fluorocarbon Seals, High Temp Commutator Seal, High Temp Section Seals, Black Paint
ABCW[1]	No Shaft Hardware, Fluorocarbon Seals, High Temperature Commutator Seal, High Temp Section Seals, Bidirectional shuttle (.062 Orifice) (11:00*), Black Paint
ABCZ[2]	Fluorocarbon Seals, High Temp Commutator Seal , High Temp Section Seals, Double paint
BBGV[1,2]	No Shaft Hardware, Fluorocarbon Seals, High Temperature Commutator Seal, 1015 PSI Int Bidirectional Relief, Black Paint
BBGW[1,2]	No Shaft Hardware, Fluorocarbon Seals, High Temperature Commutator Seal, 1450 PSI Int Bidirectional Relief, Black Paint
BBGX[1,2]	No Shaft Hardware, Fluorocarbon Seals, High Temperature Commutator Seal, 2031 PSI Int Bidirectional Relief, Black Paint
BBGY[1,2]	No Shaft Hardware, Fluorocarbon Seals, High Temperature Commutator Seal, 3046 PSI Int Bidirectional Relief, Black Paint
BBHC[2]	No Shaft Hardware, Fluorocarbon Seals, High Temperature Commutator Seal, 725 PSI Int Bidirectional Relief, Black Paint
BBHD[2,3]	No Shaft Hardware, Fluorocarbon Seals, High Temperature Commutator Seal, 2538 PSI Int Bidirectional Relief, Black Paint

[1] No Nut with shaft code 08
[2] Paint area all over except front and rear pilot and mounting flanges and shaft

Shaded areas indicate custom order components. Standard pricing and delivery terms may not apply to these components. Please refer to the price list for details, or consult your Parker Pump Motor division Sales Resource.

WARNING
This product can expose you to chemicals including lead and DEHP, which are known to the State of California to cause cancer, and birth defects or other reproductive harm. For more information go to www.p65warnings.ca.gov

Tel: +45 63 12 83 00 | Email: ps@hymatik.com | www.hymatik.com | Hvidkaervej 27a, DK-5250 Odense SV, Denmark

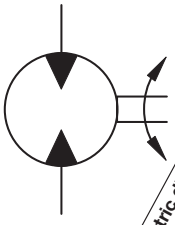

Motor Series TL	Geometric displacement Geom. Schluckvolumen Cylindrée Cilindrata **cm³/rev** in³/rev	Max. speed @ Max. intermittent flow Max. Drehzahl Intermittierender Betrieb: Vitesse de rotation maxi Velocidad maxima a caudal intermitente maximo rev/min	Max. oil flow Max. Schluckstrom Débit d'huile maxi Portata max ***cont / int*** **l/min** g/min	Max. differential pressure Max. Druckgefälle Chute de pression maxi Presion diferencial maxima ***cont / int*** **bar** psid	Max. supply pressure Max. Eingangsdruck Pression maxi entrée Presion maxima de alimentacion ***max*** **bar** psig	Max. torque Max. Drehmoment Couple maxi Torque Maximo ***cont / int*** **Nm** lb-in	Max. performance Max. Leistungsabgabe Puissance de sortie maxi Potenza meccanica max ***max*** **KW** HP	Min. starting torque Min. Anlaufmoment Couple min. fourni au dé manrage Torque minimo de arranque ***cont / int*** **Nm** lb-in
TL0140	**140** 8.6	613	**68 95** 18 25	**190 241** 2750 3500	**300** 4350	**364 463** 3226 4095	**30** 40	**294 365** 2606 3234
TL0170	**169** 10.3	512	**68 95** 18 25	**190 241** 2750 3500	**300** 4350	**449 570** 3970 5042	**31** 41	**354 445** 3137 3943
TL 0195	**195** 11.9	484	**68 95** 18 25	**190 241** 2750 3500	**300** 4350	**511 648** 4520 5739	**34** 46	**414 526** 3666 4654
TL 0240	**238** 14.5	399	**68 95** 18 25	**190 241** 2750 3500	**300** 4350	**620 790** 5485 6990	**34** 46	**536 679** 4740 6011
TL 0280	**280** 17.1	335	**68 95** 18 25	**190 241** 2750 3500	**300** 4350	**730 929** 6460 8218	**34** 45	**619 787** 5479 6967
TL 0310	**310** 18.9	310	**68 95** 18 25	**190 241** 2750 3500	**300** 4350	**847 1079** 7499 9548	**36** 48	**713 907** 6309 8029
TL 0360	**364** 22.2	255	**68 95** 18 25	**172 224** 2500 3250	**300** 4350	**890 1163** 7874 10293	**31** 42	**778 1002** 6882 8867

Performance data based on testing using 10W40 oil with a viscosity of 200 SUS at 54° C (130° F.). Performance data is typical. Actual data may vary slightly from one production motor to another.

Les donnees sur les performances sont basees sur des tests utilisant de l'huile 10W40 d'une viscosite de 200 SUS a 54°C (130°F). Ces donnees correspondent a des situations typiques. Les donnees reelles peuvent varier legerement d'un moteur de production a l'autre.

Leistungsdaten sind gemessen mit SAE 10W40 bei einer Viskositaet von 43,1 Cst bei 54°C. Geringfuegige Abweichungen von den Katalogdaten sind moeglich.

Datos tecnicos obtenidos con aceite 10W40 de 200 SUS de viscosidad a 54°C (130°F). Los datos proporcionados son valores tipcos. Los valores exactos reales podrian tener una pequena variacion entre distintos motores.

Intermittent operation rating applies to 10% of every minute.

Intermittierende Werte maximal 10% von jeder Betriebsminute.

Fonctionnement interm. 10% max. de chaque minute d`utilisation.

Capacidad de funcionamiento intermitente valida para 10% por cada minuto.

Peak operation rating applies to 1% max of every minute.

WARNING
This product can expose you to chemicals including lead and DEHP, which are known to the State of California to cause cancer, and birth defects or other reproductive harm. For more information go to www.p65warnings.ca.gov

Tel: +45 63 12 83 00 | Email: ps@hymatik.com | www.hymatik.com | Hvidkaervej 27a, DK-5250 Odense SV, Denmark

TL 0140

8.6 cu in / rev

PRESSURE (PSID)

Flow (GPM)	500	1000	1500	2000	2500	2750	3000	3500
.5	364 **12**	955 **11**	1531 **10**	2115 **9**	2719 **7**	3016 **6**	3288 **5**	3803 **2**
1	395 **25**	1014 **24**	1599 **23**	2174 **21**	2761 **19**	3056 **17**	3352 **16**	3871 **13**
2	408 **51**	1011 **49**	1634 **47**	2229 **45**	2828 **42**	3127 **40**	3421 **38**	3943 **35**
3	411 **77**	1029 **74**	1659 **72**	2257 **69**	2856 **65**	3191 **63**	3459 **62**	4006 **57**
4	414 **103**	1040 **99**	1675 **96**	2286 **93**	2900 **89**	3226 **86**	3509 **83**	4054 **78**
5	407 **129**	1039 **126**	1685 **123**	2285 **119**	2899 **113**	3210 **110**	3532 **108**	4075 **102**
7	381 **182**	1004 **177**	1646 **172**	2250 **168**	2862 **162**	3180 **158**	3499 **155**	4095 **147**
9	338 **235**	951 **231**	1599 **226**	2208 **220**	2802 **213**	3117 **208**	3422 **203**	4041 **193**
12	263 **308**	856 **303**	1485 **297**	2093 **290**	2693 **283**	2983 **278**	3314 **272**	3957 **260**
15	170 **380**	771 **376**	1381 **371**	1983 **364**	2587 **356**	2898 **350**	3219 **343**	3838 **328**
20	65 **454**	659 **446**	1242 **437**	1864 **430**	2443 **422**	2748 **418**	3100 **413**	3744 **399**
25		361 **613**	896 **601**	1464 **588**	2046 **575**	2363 **567**	2770 **558**	3455 **539**

TORQUE (LB IN) 2770
SPEED (RPM) 558

■ Cont. □ Int.

Intermittent operation rating applies to 10% of every minute.

Fonctionnement interm. 10% max. de chaque minute d`utilisation.

Performance data based on testing using 10W40 oil with a viscosity of 200 SUS at 54° C (130° F.). Performance data is typical. Actual data may vary slightly from one production motor to another.

Les donnees sur les performances sont basees sur des tests utilisant de l'huile 10W40 d'une viscosite de 200 SUS a 54°C (130°F). Ces donnees correspondent a des situations typiques. Les donnees reelles peuvent varier legerement d'un moteur de production a l'autre.

Intermittierende Werte maximal 10% von jeder Betriebsminute.

Capacidad de funcionamiento intermitente valida para 10% por cada minuto.

Leistungsdaten sind gemessen mit SAE 10W40 bei einer Viskositaet von 43,1 Cst bei 54°C. Geringfuegige Abweichungen von den Katalogdaten sind moeglich.

Datos tecnicos obtenidos con aceite 10W40 de 200 SUS de viscosidad a 54°C (130°F). Los datos proporcionados son valores tipcos. Los valores exactos reales podrian tener una pequena variacion entre distintos motores.

WARNING
This product can expose you to chemicals including lead and DEHP, which are known to the State of California to cause cancer, and birth defects or other reproductive harm. For more information go to www.p65warnings.ca.gov

Tel: +45 63 12 83 00 | Email: ps@hymatik.com | www.hymatik.com | Hvidkaervej 27a, DK-5250 Odense SV, Denmark

TL 0170

10.3 cu in / rev

PRESSURE (PSID)

Flow (GPM)	500	1000	1500	2000	2500	2750	3000	3500
.5	499 **10**	1226 **10**	1937 **9**	2656 **7**	3395 **6**	3760 **5**	4100 **4**	4750 **2**
1	530 **21**	1285 **20**	2005 **19**	2715 **17**	3437 **16**	3800 **15**	4164 **13**	4818 **11**
2	543 **43**	1282 **41**	2040 **39**	2770 **38**	3504 **35**	3871 **34**	4233 **32**	4890 **29**
3	546 **64**	1300 **62**	2065 **60**	2798 **58**	3532 **55**	3935 **53**	4271 **52**	4953 **48**
4	549 **86**	1311 **83**	2081 **80**	2827 **78**	3576 **74**	3970 **72**	4321 **70**	5001 **66**
5	542 **108**	1310 **105**	2091 **102**	2826 **99**	3575 **95**	3954 **92**	4344 **90**	5022 **85**
7	516 **152**	1275 **148**	2052 **144**	2791 **140**	3538 **135**	3924 **132**	4311 **129**	5042 **123**
9	473 **196**	1222 **193**	2005 **189**	2749 **184**	3478 **178**	3861 **174**	4234 **169**	4988 **162**
12	398 **257**	1127 **253**	1891 **248**	2634 **242**	3369 **236**	3727 **232**	4126 **227**	4904 **217**
15	305 **317**	1042 **314**	1787 **310**	2524 **304**	3263 **297**	3642 **293**	4031 **286**	4785 **274**
20	200 **379**	930 **372**	1648 **365**	2405 **359**	3119 **352**	3492 **349**	3912 **345**	4691 **333**
25		632 **512**	1302 **502**	2005 **491**	2722 **480**	3107 **474**	3582 **466**	4402 **450**

TORQUE (LB IN) 3582
SPEED (RPM) 466

☒ Cont. ☐ Int.

Intermittent operation rating applies to 10% of every minute.

Fonctionnement interm. 10% max. de chaque minute d`utilisation.

Performance data based on testing using 10W40 oil with a viscosity of 200 SUS at 54° C (130° F.). Performance data is typical. Actual data may vary slightly from one production motor to another.

Les donnees sur les performances sont basees sur des tests utilisant de l'huile 10W40 d'une viscosite de 200 SUS a 54°C (130°F). Ces donnees correspondent a des situations typiques. Les donnees reelles peuvent varier legerement d'un moteur de production a l'autre.

Intermittierende Werte maximal 10% von jeder Betriebsminute.

Capacidad de funcionamiento intermitente valida para 10% por cada minuto.

Leistungsdaten sind gemessen mit SAE 10W40 bei einer Viskositaet von 43,1 Cst bei 54°C. Geringfuegige Abweichungen von den Katalogdaten sind moeglich.

Datos tecnicos obtenidos con aceite 10W40 de 200 SUS de viscosidad a 54°C (130°F). Los datos proporcionados son valores tipcos. Los valores exactos reales podrian tener una pequena variacion entre distintos motores.

WARNING
This product can expose you to chemicals including lead and DEHP, which are known to the State of California to cause cancer, and birth defects or other reproductive harm. For more information go to www.p65warnings.ca.gov

Tel: +45 63 12 83 00 | Email: ps@hymatik.com | www.hymatik.com | Hvidkaervej 27a, DK-5250 Odense SV, Denmark

TL 0195

11.9 cu in / rev

PRESSURE (PSID)

Flow (GPM)	500	1000	1500	2000	2500	2750	3000	3500
.5	571 **9**	1353 **7**	2148 **5**	2938 **3**				
1	609 **18**	1417 **16**	2234 **14**	3032 **12**	3873 **10**	4250 **8.5**	4641 **7**	5400 **4**
2	621 **37**	1443 **35**	2267 **33**	3086 **30**	3923 **27**	4300 **25.5**	4712 **24**	5450 **19**
3	619 **56**	1448 **54**	2279 **52**	3104 **49**	3952 **46**	4331 **44**	4727 **42**	5490 **37**
4	615 **75**	1456 **73**	2303 **71**	3142 **68**	3963 **64**	4371 **61.5**	4761 **59**	5535 **53.5**
5	604 **94**	1448 **92**	2301 **90**	3148 **87**	3980 **82**	4400 **79.5**	4792 **77**	5587 **72**
7	571 **132**	1419 **130**	2272 **127**	3125 **123**	3965 **119**	4370 **116**	4784 **113**	5590 **107**
9	518 **170**	1364 **168**	2223 **165**	3072 **161**	3911 **155**	4310 **152**	4738 **149**	5549 **142**
12	437 **226**	1264 **224**	2113 **221**	2956 **216**	3792 **210**	4191 **206.8**	4620 **203**	5433 **195**
15	344 **283**	1164 **281**	2003 **277**	2835 **272**	3668 **265**	4062 **261**	4498 **257**	5314 **248**
20	189 **343**	1013 **340**	1833 **333**	2633 **325**	3461 **319**	3876 **315**	4295 **310**	5116 **300**
25		613 **468**	1397 **460**	2100 **452**	2903 **443**	3302 **438**	3750 **433**	4542 **422**

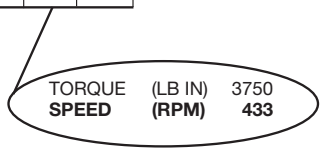

☐ Cont. ☐ Int.

Intermittent operation rating applies to 10% of every minute.

Fonctionnement interm. 10% max. de chaque minute d`utilisation.

Performance data based on testing using 10W40 oil with a viscosity of 200 SUS at 54° C (130° F.). Performance data is typical. Actual data may vary slightly from one production motor to another.

Les donnees sur les performances sont basees sur des tests utilisant de l'huile 10W40 d'une viscosite de 200 SUS a 54°C (130°F). Ces donnees correspondent a des situations typiques. Les donnees reelles peuvent varier legerement d'un moteur de production a l'autre.

Intermittierende Werte maximal 10% von jeder Betriebsminute.

Capacidad de funcionamiento intermitente valida para 10% por cada minuto.

Leistungsdaten sind gemessen mit SAE 10W40 bei einer Viskositaet von 43,1 Cst bei 54°C. Geringfuegige Abweichungen von den Katalogdaten sind moeglich.

Datos tecnicos obtenidos con aceite 10W40 de 200 SUS de viscosidad a 54°C (130°F). Los datos proporcionados son valores tipcos. Los valores exactos reales podrian tener una pequena variacion entre distintos motores.

WARNING
This product can expose you to chemicals including lead and DEHP, which are known to the State of California to cause cancer, and birth defects or other reproductive harm. For more information go to www.p65warnings.ca.gov

Tel: +45 63 12 83 00 | Email: ps@hymatik.com | www.hymatik.com | Hvidkaervej 27a, DK-5250 Odense SV, Denmark

TL 0240

14.5 cu in / rev

PRESSURE (PSID)

Flow (GPM)	500	1000	1500	2000	2500	2750	3000	3500
.5	705 **8**	1662 **8**	2641 **7**	3635 **6**	4620 **5**	5095 **5**	5585 **4**	6536 **3**
1	752 **16**	1740 **15**	2740 **14**	3746 **14**	4739 **13**	5200 **12**	5712 **11**	6661 **10**
2	772 **31**	1783 **30**	2799 **30**	3818 **29**	4830 **27**	5300 **26**	5823 **25**	6793 **23**
3	769 **47**	1784 **46**	2812 **45**	3844 **44**	4863 **42**	5362 **41**	5857 **40**	6828 **37**
4	766 **62**	1797 **62**	2840 **61**	3887 **59**	4923 **57**	5384 **56**	5932 **55**	6910 **51**
5	751 **78**	1790 **77**	2842 **76**	3895 **75**	4933 **72**	5438 **71**	5951 **69**	6946 **66**
7	710 **109**	1758 **108**	2816 **107**	3875 **105**	4920 **102**	5425 **101**	5947 **99**	6958 **95**
9	649 **141**	1697 **139**	2762 **138**	3826 **136**	4875 **132**	5387 **130**	5908 **128**	6922 **124**
12	553 **188**	1583 **186**	2633 **184**	3675 **182**	4706 **178**	5219 **175**	5725 **172**	6734 **167**
15	438 **235**	1471 **233**	2499 **230**	3513 **227**	4520 **223**	4998 **220**	5526 **217**	6534 **211**
20	312 **282**	1350 **279**	2300 **276**	3305 **273**	4310 **267**	4732 **264**	5250 **261**	6200 **254**
25		1021 **388**	1837 **384**	2710 **380**	3735 **373**	4060 **370**	4500 **365**	5423 **354**

TORQUE (LB IN) 4500
SPEED (RPM) 365

☐ Cont. ☐ Int.

Intermittent operation rating applies to 10% of every minute.

Fonctionnement interm. 10% max. de chaque minute d`utilisation.

Performance data based on testing using 10W40 oil with a viscosity of 200 SUS at 54° C (130° F.). Performance data is typical. Actual data may vary slightly from one production motor to another.

Les donnees sur les performances sont basees sur des tests utilisant de l'huile 10W40 d'une viscosite de 200 SUS a 54°C (130°F). Ces donnees correspondent a des situations typiques. Les donnees reelles peuvent varier legerement d'un moteur de production a l'autre.

Intermittierende Werte maximal 10% von jeder Betriebsminute.

Capacidad de funcionamiento intermitente valida para 10% por cada minuto.

Leistungsdaten sind gemessen mit SAE 10W40 bei einer Viskositaet von 43,1 Cst bei 54°C. Geringfuegige Abweichungen von den Katalogdaten sind moeglich.

Datos tecnicos obtenidos con aceite 10W40 de 200 SUS de viscosidad a 54°C (130°F). Los datos proporcionados son valores tipcos. Los valores exactos reales podrian tener una pequena variacion entre distintos motores.

WARNING
This product can expose you to chemicals including lead and DEHP, which are known to the State of California to cause cancer, and birth defects or other reproductive harm. For more information go to www.p65warnings.ca.gov

Tel: +45 63 12 83 00 | Email: ps@hymatik.com | www.hymatik.com | Hvidkaervej 27a, DK-5250 Odense SV, Denmark

TL 0280

17.1 cu in / rev

PRESSURE (PSID)

Flow (GPM)	500	1000	1500	2000	2500	2750	3000	3500
.5	887 **7**	2008 **6**	3147 **5**	4299 **4**	5458 **3**	6022 **2**	6599 **2**	7724 **0**
1	947 **13**	2093 **13**	3262 **12**	4424 **11**	5582 **10**	6144 **9**	6715 **8**	7812 **6**
2	982 **27**	2164 **26**	3361 **25**	4561 **24**	5745 **22**	6315 **21**	6902 **19**	8033 **15**
3	982 **40**	2167 **39**	3366 **39**	4570 **37**	5757 **36**	6356 **34**	6943 **32**	8070 **28**
4	984 **53**	2184 **52**	3397 **51**	4612 **50**	5820 **48**	6435 **46**	6985 **45**	8147 **40**
5	975 **66**	2185 **65**	3409 **64**	4634 **62**	5841 **60**	6417 **58**	7031 **56**	8201 **52**
7	931 **93**	2149 **92**	3381 **90**	4614 **88**	5829 **85**	6420 **83**	7029 **81**	8200 **76**
9	865 **119**	2083 **118**	3319 **117**	4556 **114**	5780 **110**	6396 **108**	6992 **106**	8193 **101**
12	746 **159**	1956 **158**	3190 **156**	4428 **153**	5661 **149**	6270 **147**	6885 **143**	8089 **137**
15	581 **199**	1800 **198**	3025 **196**	4255 **192**	5494 **187**	6128 **184**	6721 **181**	7912 **174**
20	415 **239**	1650 **238**	2850 **235**	4120 **230**	5350 **224**	5995 **221**	6570 **217**	7750 **209**
25	50 **332**	1240 **330**	2450 **327**	3700 **320**	5000 **312**	5650 **307**	6170 **302**	7340 **290**

TORQUE (LB IN) 6170
SPEED (RPM) 302

☐ Cont. ☐ Int.

Intermittent operation rating applies to 10% of every minute.

Fonctionnement interm. 10% max. de chaque minute d`utilisation.

Performance data based on testing using 10W40 oil with a viscosity of 200 SUS at 54° C (130° F.). Performance data is typical. Actual data may vary slightly from one production motor to another.

Les donnees sur les performances sont basees sur des tests utilisant de l'huile 10W40 d'une viscosite de 200 SUS a 54°C (130°F). Ces donnees correspondent a des situations typiques. Les donnees reelles peuvent varier legerement d'un moteur de production a l'autre.

Intermittierende Werte maximal 10% von jeder Betriebsminute.

Capacidad de funcionamiento intermitente valida para 10% por cada minuto.

Leistungsdaten sind gemessen mit SAE 10W40 bei einer Viskositaet von 43,1 Cst bei 54°C. Geringfuegige Abweichungen von den Katalogdaten sind moeglich.

Datos tecnicos obtenidos con aceite 10W40 de 200 SUS de viscosidad a 54°C (130°F). Los datos proporcionados son valores tipcos. Los valores exactos reales podrian tener una pequena variacion entre distintos motores.

WARNING
This product can expose you to chemicals including lead and DEHP, which are known to the State of California to cause cancer, and birth defects or other reproductive harm. For more information go to www.p65warnings.ca.gov

Tel: +45 63 12 83 00 | Email: ps@hymatik.com | www.hymatik.com | Hvidkaervej 27a, DK-5250 Odense SV, Denmark

TL 0310

18.9 cu in / rev

PRESSURE (PSID)

Flow (GPM)	500	1000	1500	2000	2500	2750	3000	3500
.5	1031 **6**	2296 **5**	3579 **5**	4875 **4**	6178 **3**	6814 **2**	7463 **2**	8732 **0**
1	1091 **12**	2381 **11**	3694 **11**	5000 **10**	6302 **9**	6936 **8**	7579 **7**	8820 **5**
2	1126 **24**	2452 **24**	3793 **23**	5137 **22**	6465 **20**	7107 **19**	7766 **17**	9041 **14**
3	1126 **36**	2455 **36**	3798 **35**	5146 **34**	6477 **32**	7148 **31**	7807 **29**	9078 **25**
4	1128 **48**	2472 **47**	3829 **46**	5188 **45**	6540 **43**	7227 **42**	7849 **40**	9155 **36**
5	1119 **60**	2473 **59**	3841 **58**	5210 **56**	6561 **54**	7209 **52**	7895 **51**	9209 **47**
7	1075 **84**	2437 **83**	3813 **81**	5190 **80**	6549 **77**	7212 **75**	7893 **73**	9208 **69**
9	1009 **108**	2371 **107**	3751 **106**	5132 **103**	6500 **99**	7188 **98**	7856 **96**	9201 **91**
12	890 **144**	2244 **143**	3622 **141**	5004 **138**	6381 **135**	7062 **132**	7749 **129**	9097 **124**
15	725 **180**	2088 **179**	3457 **177**	4831 **174**	6214 **169**	6920 **166**	7585 **164**	8920 **157**
20	559 **216**	1938 **215**	3282 **213**	4696 **208**	6070 **203**	6787 **200**	7434 **196**	8758 **189**
25	194 **300**	1528 **298**	2882 **295**	4276 **289**	5720 **282**	6442 **277**	7034 **273**	8348 **262**

TORQUE (LB IN) 7034
SPEED (RPM) 273

☒ Cont. ☐ Int.

Intermittent operation rating applies to 10% of every minute.

Fonctionnement interm. 10% max. de chaque minute d`utilisation.

Performance data based on testing using 10W40 oil with a viscosity of 200 SUS at 54° C (130° F.). Performance data is typical. Actual data may vary slightly from one production motor to another.

Les donnees sur les performances sont basees sur des tests utilisant de l'huile 10W40 d'une viscosite de 200 SUS a 54°C (130°F). Ces donnees correspondent a des situations typiques. Les donnees reelles peuvent varier legerement d'un moteur de production a l'autre.

Intermittierende Werte maximal 10% von jeder Betriebsminute.

Capacidad de funcionamiento intermitente valida para 10% por cada minuto.

Leistungsdaten sind gemessen mit SAE 10W40 bei einer Viskositaet von 43,1 Cst bei 54°C. Geringfuegige Abweichungen von den Katalogdaten sind moeglich.

Datos tecnicos obtenidos con aceite 10W40 de 200 SUS de viscosidad a 54°C (130°F). Los datos proporcionados son valores tipcos. Los valores exactos reales podrian tener una pequena variacion entre distintos motores.

WARNING
This product can expose you to chemicals including lead and DEHP, which are known to the State of California to cause cancer, and birth defects or other reproductive harm. For more information go to www.p65warnings.ca.gov

Tel: +45 63 12 83 00 | Email: ps@hymatik.com | www.hymatik.com | Hvidkaervej 27a, DK-5250 Odense SV, Denmark

TL 0360

22.2 cu in / rev

PRESSURE (PSID)

Flow (GPM)	500	1000	1500	2000	2500	2750	3000	3250
.5	1294 **5**	2821 **5**	4367 **4**	5926 **3**	7491 **2**	8259 **2**	9039 **1**	9810 **1**
1	1354 **10**	2906 **10**	4482 **9**	6051 **8**	7615 **8**	8381 **7**	9155 **6**	9947 **6**
2	1389 **20**	2977 **20**	4581 **19**	6188 **18**	7778 **17**	8552 **16**	9342 **15**	10152 **14**
3	1389 **31**	2980 **30**	4586 **30**	6197 **29**	7790 **27**	8593 **26**	9383 **25**	10190 **24**
4	1391 **41**	2997 **40**	4617 **39**	6239 **38**	7853 **37**	8672 **36**	9425 **34**	10262 **33**
5	1382 **51**	2998 **50**	4629 **49**	6261 **48**	7874 **46**	8654 **45**	9471 **43**	10288 **42**
7	1338 **72**	2962 **71**	4601 **69**	6241 **68**	7862 **65**	8657 **64**	9469 **62**	10293 **61**
9	1272 **92**	2896 **91**	4539 **90**	6183 **88**	7813 **85**	8633 **83**	9432 **82**	10261 **79**
12	1153 **122**	2769 **122**	4410 **120**	6055 **118**	7694 **115**	8507 **113**	9325 **110**	10144 **108**
15	988 **153**	2613 **152**	4245 **151**	5882 **148**	7527 **144**	8365 **142**	9161 **139**	9985 **136**
20	822 **184**	2463 **183**	4070 **181**	5747 **177**	7383 **173**	8232 **170**	9010 **167**	9847 **164**
25	457 **255**	2053 **254**	3670 **251**	5327 **246**	7033 **240**	7887 **236**	8610 **232**	9472 **227**

TORQUE (LB IN) 8610
SPEED (RPM) 232

☐ Cont. ☐ Int.

Intermittent operation rating applies to 10% of every minute.

Fonctionnement interm. 10% max. de chaque minute d`utilisation.

Performance data based on testing using 10W40 oil with a viscosity of 200 SUS at 54° C (130° F.). Performance data is typical. Actual data may vary slightly from one production motor to another.

Les donnees sur les performances sont basees sur des tests utilisant de l'huile 10W40 d'une viscosite de 200 SUS a 54°C (130°F). Ces donnees correspondent a des situations typiques. Les donnees reelles peuvent varier legerement d'un moteur de production a l'autre.

Intermittierende Werte maximal 10% von jeder Betriebsminute.

Capacidad de funcionamiento intermitente valida para 10% por cada minuto.

Leistungsdaten sind gemessen mit SAE 10W40 bei einer Viskositaet von 43,1 Cst bei 54°C. Geringfuegige Abweichungen von den Katalogdaten sind moeglich.

Datos tecnicos obtenidos con aceite 10W40 de 200 SUS de viscosidad a 54°C (130°F). Los datos proporcionados son valores tipcos. Los valores exactos reales podrian tener una pequena variacion entre distintos motores.

WARNING
This product can expose you to chemicals including lead and DEHP, which are known to the State of California to cause cancer, and birth defects or other reproductive harm. For more information go to www.p65warnings.ca.gov

Parker Hannifin Corporation
Pump & Motor Division
Greeneville, Tennessee, USA

Tel: +45 63 12 83 00 | Email: ps@hymatik.com | www.hymatik.com | Hvidkaervej 27a, DK-5250 Odense SV, Denmark

Wheel Mount / Radnabengehäuse
Monture à roue/ Montaje de rueda

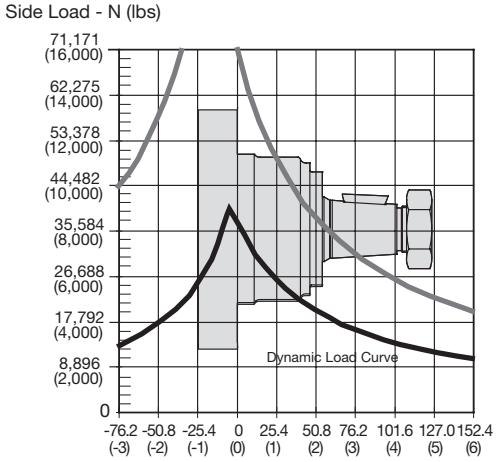

Motor Image Not To Scale

The dynamic side load curve is based on uni-directional steady state loads for L_{10} bearing life at 3 x 10^6 revolutions.
Die zulässige auslegbare radiale Wellenbelastungskurve ist unter ruhenden, einseitig statisch gerichteten Lastverhältnissen auf eine L_{10} Lebensdauer mit 3 x 10^6 Umdrehungen kalkuliert.
La courbe de charge latérale permise se base sur des charges unidirectionnelles en régime permanent pour le roulement L_{10} à 3 x 10^6 révolutions.
La curva de valores admisibles de carga lateral está basada en cargas constantes para cojinetes L_{10} a 3 x 10^6 revoluciones.

The maximum load curve is defined by bearing static load capacity. This curve should not be exceeded at any time including shock loads.
Die maximale radiale Wellenbelastungskurve ist definiert als maximale statische Last ohne Drehzahl. Sie gilt als Grenze und sollte keinesfalls überschritten werden.
La courbe de charge maximale est définie par la capacité de charge statique portante. Cette courbe ne devrait être dépassée en aucun moment y compris pour les charges par à-coups.
La curva de carga máxima queda definida por la capacidad de carga estática del cojinete. No se deben superar los valores de esta curva, ni siquiera con cargas provisorias de impacto.

Equation to Calculate the Expected Radial Bearing Life
Gleichung zur Ermittlung der Lagerlebensdauer

Equation to calculate the dynamic bearing life for a given load:
Bestimmung der erlaubten radialen Wellenbelastung mit vorgegebener Last

Use F_a, F_b and S in equation to determine hours of L_{10} bearing life.
Die Lebensdauer in Stunden ergibt sich durch einsetzen von F_a, F_b, und S in die nachstehende Formel.

$$L = \frac{3 \times 10^6}{60 \times S} \left\{ \frac{F_a}{F_b} \right\}^{3.33}$$

Where / Mit:

S = Shaft Speed RPM / Abtriebswellendrehzahl in min $^{-1}$
L = Life In Hours / Lebensdauer in Stunden
F_a = Dynamic side load defined by above curve at a distance from mounting flange. / Erlaubte radiale Wellenbelastung als Function der Laenge
F_b = Application side load. / Anwendungsseitige Wellenbelastung

⚠ **WARNING**
This product can expose you to chemicals including lead and DEHP, which are known to the State of California to cause cancer, and birth defects or other reproductive harm. For more information go to www.p65warnings.ca.gov

Tel: +45 63 12 83 00 | Email: ps@hymatik.com | www.hymatik.com | Hvidkaervej 27a, DK-5250 Odense SV, Denmark

Code: L US

Wheel, Front Brake Nose

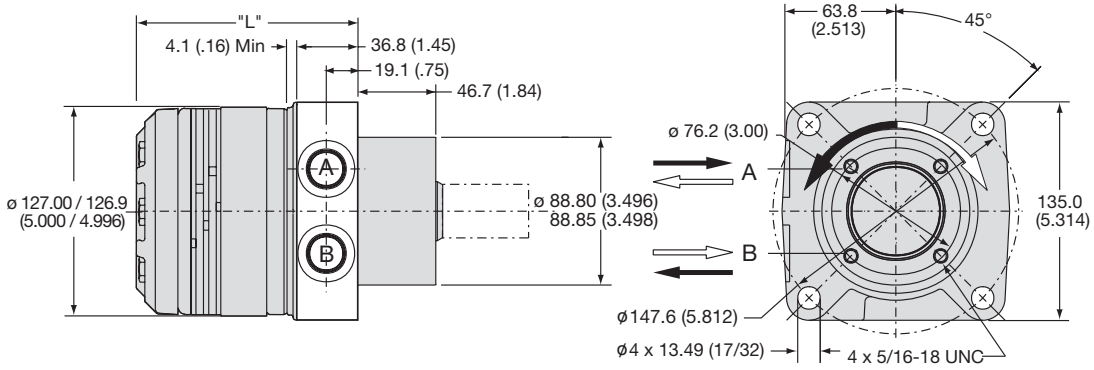

Code L	disp.	0140	0170	0195	0240	0280	0310	0360
Weight/Gewicht	**kg**	**10.9**	**11.1**	**11.4**	**11.8**	**12.2**	**12.4**	**12.9**
Poids/Peso	(lb)	(24.1)	(24.6)	(25.2)	(26.0)	(26.9)	(27.4)	(28.4)
Length	**"L" mm**	**122.7**	**122.7**	**122.7**	**126.7**	**131.1**	**134.6**	**141.7**
	"L" (in)	(4.83)	(4.83)	(4.83)	(4.99)	(5.16)	(5.30)	(5.58)

Code: U US

Wheel, Standard

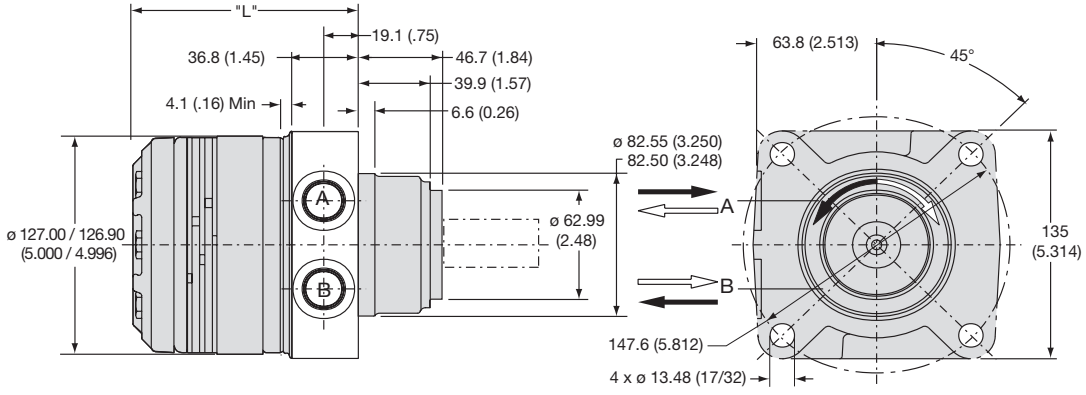

Code U	disp.	0140	0170	0195	0240	0280	0310	0360
Weight/Gewicht	**kg**	**10.9**	**11.1**	**11.4**	**11.8**	**12.2**	**12.4**	**12.9**
Poids/Peso	(lb)	(24.1)	(24.6)	(25.2)	(26.0)	(26.9)	(27.4)	(28.4)
Length	**"L" mm**	**122.7**	**122.7**	**122.7**	**126.7**	**131.1**	**134.6**	**141.7**
	"L" (in)	(4.83)	(4.83)	(4.83)	(4.99)	(5.16)	(5.30)	(5.58)

English equivalents for metric specifications are shown in ( ).

WARNING
This product can expose you to chemicals including lead and DEHP, which are known to the State of California to cause cancer, and birth defects or other reproductive harm. For more information go to www.p65warnings.ca.gov

Tel: +45 63 12 83 00 | Email: ps@hymatik.com | www.hymatik.com | Hvidkaervej 27a, DK-5250 Odense SV, Denmark

Code: S US

7/8-14 SAE O-Ring

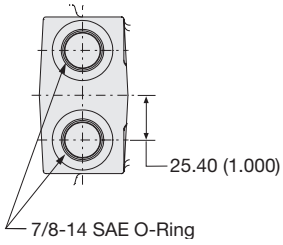

English equivalents for metric specifications are shown in ( ).

WARNING
This product can expose you to chemicals including lead and DEHP, which are known to the State of California to cause cancer, and birth defects or other reproductive harm. For more information go to www.p65warnings.ca.gov

Tel: +45 63 12 83 00 | Email: ps@hymatik.com | www.hymatik.com | Hvidkaervej 27a, DK-5250 Odense SV, Denmark

Code L & U

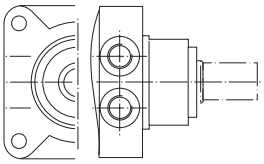

Code: 08 EU US

1 1/4" Tapered

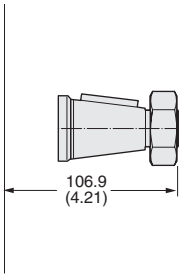

Code: 08 EU US

1 1/4" Tapered

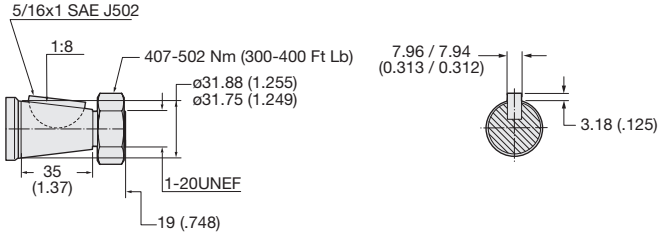

English equivalents for metric specifications are shown in ( ).

WARNING
This product can expose you to chemicals including lead and DEHP, which are known to the State of California to cause cancer, and birth defects or other reproductive harm. For more information go to www.p65warnings.ca.gov

13 Displacements	(8.6 to 58.5 in³/rev)
13 Schluckvolumen	**141 . . . 959 cm³/rev**
13 Cylindrée	
13 Despazamientos	

	Cont.	**Int.**
Maximum Pressure	(3000 psid)	(4000 psid)
Eingangsdruck	**. . . 207 bar**	**. . . 276 bar**
Pression entrée		
Presion Maxima		

Maximum Oil Flow	(30 gpm)
Schluckstrom	**. . . 114 lpm**
Débit d'huile	
Caudal Maximo de Aceite	

Maximum Speed	(660 rpm)
Drehzahl	**660 rpm**
Vitesse de rotation	
Velocidad Maxima	

	Cont.	**Int.**
Maximum Torque	(9,239 lb in)	(12,636 lb in)
MaxDrehmoment	**1044 Nm**	**1428 Nm**
Couple		
Torque Maximo		

Maximum Side Load at Key	(3597 lb)
Seitenlast	**. . . 16000 N**
Charges latèrales	
Carga Maxima Lateral	

Exceptional Strength and Durability in a High Performance Motor

The heart of Parker's TG Series powertrain, the drive link, is an extra heavy duty part that includes unique 60:40 spline geometry. Rugged construction throughout allows the transmission of up to 13,000 lb-in of torque. The entire powertrain is continually washed in cool, high flow fluid to assure long life. Roller vanes and sealed commutator maintain high efficiency and provide smooth low speed performance.

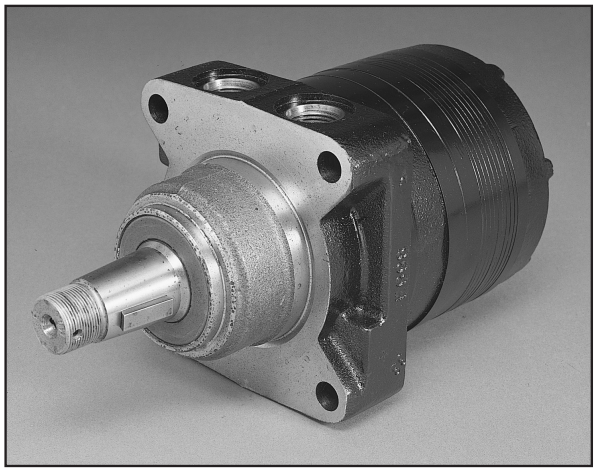

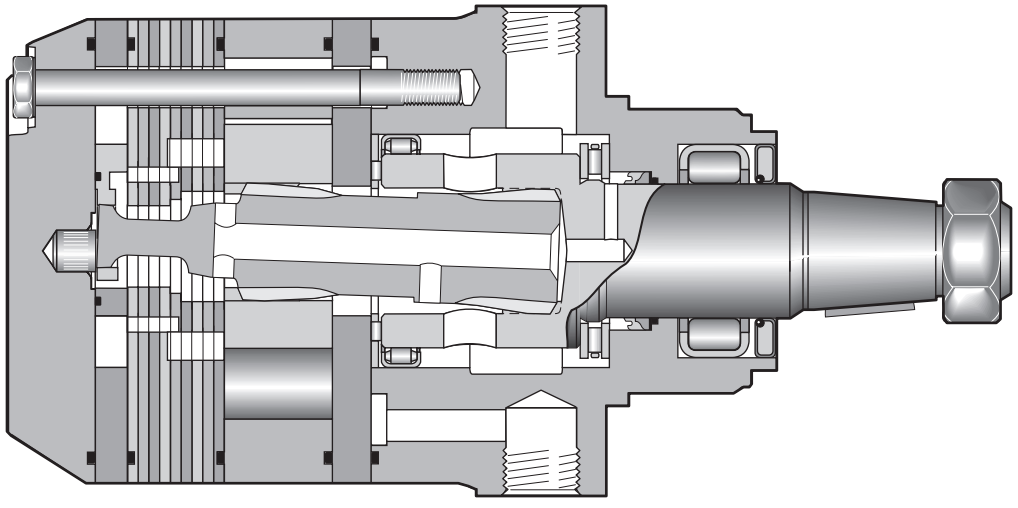

⚠ **WARNING**
This product can expose you to chemicals including lead and DEHP, which are known to the State of California to cause cancer, and birth defects or other reproductive harm. For more information go to www.p65warnings.ca.gov

Ordering Information / Bestellschlüssel
System de Commande / Imformacion para pedidos

LSHT Torqmotors™ and Nichols™ Motors
TG Series / Serie / Série
HY13-1590-011/US,EU

TG — Series

XXXX — Displacement / Schluckvolumen / Cylindrée / Desplazamiento

Code	cm³/tr cm³/giro cm³/U	in³/rev
0140	141	8.6
0170	169	10.3
0195	195	11.9
0240	238	14.5
0280	280	17.1
0310	310	18.9
0335	337	20.6
0360	360	22.2
0405	405	24.7
0475	477	29.1
0530	528	32.3
0625	623	38.0
0785	786	48.0
0960	959	58.5

XX — Mounting/Ports / Gehäuse/Anschluß / Carter/Plan de raccordement / Montaje/Lumbreras

Code	Mounting
AS	SAE "A" 2 Bolt, 7/8-14 SAE
LS	Wheel, Front Brake, 7/8-14 SAE
MS	Magneto, 7/8-14 SAE
UB	Wheel, Standard 7/8-14 SAE O-Ring; Rear Radial
US	Wheel, Standard, 7/8-14 SAE
ZS	Four Bolt Flange, 7/8-14 O-Ring; Extended Pilot With O-Ring Groove

Custom Order

EB	6 Hole Mount Deep Pilot, 7/8-14 SAE Rear Radial
HK	Wheel, Machined Pilot Nose, M6 Manifold
HW	Wheel, Machined Pilot Nose, G1/2 (1/2 BSPP) Milled Port Face
JS	Wheel, Machined Pilot Nose, 1/2 -13 UNC Tapped Holes, 7/8 O-ring ports
MB	Magneto 7/8-14 SAE O-Ring; Rear Radial
MM	Magneto, 5/16-18 UNC Manifold
RS	Wheel Mount For Ø1-1/2" shaft, 7/8-14 front ports
UE	Wheel, Standard Manifold; Rear Radial
WC	Wheel Mount. 7/8 O-ring Rear Radial w/ 2.43" Dimension To C/L
WE	Wheel, Optional Manifold; Rear Radial

XX — Shaft / Welle / Arbre / Eje

Code	Shaft
01*	1" 6B Spline
03	1 1/4" Keyed
05	1 1/4" 14 Tooth Spline
08	1 1/4" Tapered
19	1 3/8" J501 Taper

Custom Order

02	Long Wood. Key, 1/4 Tap, Groove
06	19 Tooth Spline
17	19 T. Spline (16/32 Pitch)
20	1 3/8" Keyed
38	1.378" Special Long Straight
39	14 Tooth, Groove, 5/8 Tap
44	14 T. Spline (12/24 P.), 12mm Tap
46	32 mm Keyed
85	1 1/4", Captured Straight Keyway, No Taped Hole & No Ring Groove
86	1 1/4" With Captured Straight Keyway, No Taped Hole & No Ring Groove

* Conforms to SAE recommended length

Shaded areas indicate custom order components. Standard pricing and delivery terms may not apply to these components. Please refer to the price list for details, or consult your Parker Pump Motor division Sales Resource.

011 TG.indd, b

WARNING
This product can expose you to chemicals including lead and DEHP, which are known to the State of California to cause cancer, and birth defects or other reproductive harm. For more information go to www.p65warnings.ca.gov

Tel: +45 63 12 83 00 | Email: ps@hymatik.com | www.hymatik.com | Hvidkaervej 27a, DK-5250 Odense SV, Denmark

Ordering Information / Bestellschlüssel
System de Commande / Imformacion para pedidos

LSHT Torqmotors™ and Nichols™ Motors
TG Series / Serie / Série HY13-1590-011/US,EU

0

Rotation
Drehrichtung
Direction de rotation
Rotacion

Code	Rotation
0	Standard 
1	Reverse Timed Manifold 

Code	Rear Rotation
0	Standard 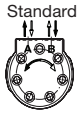
1	Reverse Timed Manifold 

Rotation viewed from shaft end.

XXXX

Options
Opciones

Code	Options
AAAA	"Standard", Black Paint (045134), Paint area all over except front and rear pilot and mounting flanges and shaft
AAAB	"Standard", No Paint
AAAC	"Standard", Double Paint (045247), Paint area all over except front and rear pilot and mounting flanges and shaft
AABJ	Free Running Rotor Set, Black paint (045134), Paint area all over except front and rear pilot and mounting flanges and shaft
AABT	Black paint (045134), Paint area all over except front and rear pilot and mounting flanges and shaft, No shaft hardware
AAFA	Fluorocarbon (Viton) Seals, High Temp Commutator Seal, No paint
AAFW	Fluorocarbon (Viton) Seals, High Temp Commutator Seal, Black paint (045134), Paint area all over except front and rear pilot and mounting flanges and shaft
AAJH	Fluorocarbon (Viton) Seals, High Temp Commutator Seal, Black paint (045134), Paint area all over except front and rear pilot and mounting flanges and shaft, No shaft hardware
AAJL	No paint, No shaft hardware
AAUP	Fluorocarbon (Viton) Seals, High Temp Commutator Seal, No Paint, No shaft Hardware
AAVE	Free Running Rotor Set, Fluorocarbon (Viton) Seals, High Temp Commutator Seal, Black Paint (045134), Paint area all over except front and rear pilot and mounting flanges and shaft
ABCW	Fluorocarbon (Viton) Seals, High Temperature Commutator Seal, Bidirectional shuttle (.062 Orifice) (11:00"), Black Paint (045134), Paint area all over except front and rear pilot and mounting flanges and shaft, No Shaft Hardware
ABCZ	Fluorocarbon (Viton) Seals, Double paint (045247), Paint area all over except front and rear pilot and mounting flanges and shaft
BBGV	Fluorocarbon (Viton) Seals, High Temperature Commutator Seal, 1015 PSI Int Bidirectional Relief, Black Paint (045134), Paint area all over except front and rear pilot and mounting flanges and shaft, No Shaft Hardware
BBGW	Fluorocarbon (Viton) Seals, High Temperature Commutator Seal, 1450 PSI Int Bidirectional Relief, Black Paint (045134), Paint area all over except front and rear pilot and mounting flanges and shaft, No Shaft Hardware
BBGX	No Shaft Hardware, Fluorocarbon (Viton) Seals, High Temperature Commutator Seal, 2031 PSI Int Bidirectional Relief, Black Paint (045134), Paint area all over except front and rear pilot and mounting flanges and shaft, No Shaft Hardware
BBGY	Fluorocarbon (Viton) Seals, High Temperature Commutator Seal, 3046 PSI Int Bidirectional Relief, Black Paint (045134), Paint area all over except front and rear pilot and mounting flanges and shaft, No Shaft Hardware
BBGZ	Fluorocarbon (Viton) Seals, High Temperature Commutator Seal, 4061 PSI Int Bidirectional Relief, Black Paint (045134), Paint area all over except front and rear pilot and mounting flanges and shaft, No Shaft Hardware
BBHC	Fluorocarbon (Viton) Seals, High Temperature Commutator Seal, 725 PSI Int Bidirectional Relief, Black Paint (045134), Paint area all over except front and rear pilot and mounting flanges and shaft, No Shaft Hardware
BBHD	Fluorocarbon (Viton) Seals, High Temperature Commutator Seal, 2538 PSI Int Bidirectional Relief, Black Paint (045134), Paint area all over except front and rear pilot and mounting flanges and shaft, No Shaft Hardware
FSEK	Fluorocarbon (Viton) Seals, High Temperature Commutator Seal, Parker ECD Speed Sensor (455073), Black Paint (045134), Paint area all over except front and rear pilot and mounting flanges and shaft, No Shaft Hardware
FSEN	Fluorocarbon (Viton) Seals, High Temperature Commutator Seal, Parker ECD Speed Sensor (455073), No Paint, No Shaft Hardware

* Abtriebswelle	Ø 25mm	Max. Moment cont./int.	450/550 Nm
Coupling shaft	Ø 1 inch	Max. torque cont./int.	
Arbre	6B SAE	Couple maxi cont./int.	
Eje de acople		Coppia max cont./int.	

Shaded areas indicate custom order components. Standard pricing and delivery terms may not apply to these components. Please refer to the price list for details, or consult your Parker Pump Motor division Sales Resource.

WARNING
This product can expose you to chemicals including lead and DEHP, which are known to the State of California to cause cancer, and birth defects or other reproductive harm. For more information go to www.p65warnings.ca.gov

Tel: +45 63 12 83 00 | Email: ps@hymatik.com | www.hymatik.com | Hvidkaervej 27a, DK-5250 Odense SV, Denmark

Performance Data / Leistungsdaten
Puissance / Datos Tecnicos

LSHT Torqmotors™ and Nichols™ Motors
TG Series / Serie / Série HY13-1590-011/US,EU

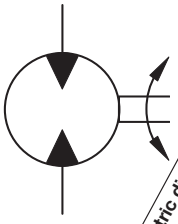

Motor Series TG	Geometric displacement cm³/rev in³/rev	Max. speed @ Max. intermittent flow Max. Drehzahl Intermittierender Betrieb: Vitesse de rotation maxi Velocidad maxima a caudal intermitente maximo rev/min	Max. oil flow Max. Schluckstrom Débit d'huile maxi Portata max cont / int* l/min g/min		Max. differential pressure Max. Druckgefälle Chute de pression maxi Presion diferencial maxima cont / int* bar psid		Max. supply pressure Max. Eingangsdruck Pression maxi entrée Presion maxima de alimentacion max bar psig	Max. torque Max. Drehmoment Couple maxi Torque Maximo cont / int* Nm lb-in		Max. performance Max. Leistungabgabe Puissance de sortie maxi Potenza meccanica max max KW HP	Min. starting torque Min. Anlaufmoment Couple min. fourni au dé manrage Torque minimo de arranque cont / int* Nm lb-in	
TG 0140	**141** 8.6	660	**76** 20	**95** 25	**207** 3000	**276** 4000	**300** 4350	**390** 3455	**530** 4692	**33** 45	**315** 2791	**418** 3706
TG 0170	**169** 10.3	554	**76** 20	**95** 25	**207** 3000	**276** 4000	**300** 4350	**476** 4216	**646** 5714	**33** 45	**376** 3331	**505** 4469
TG 0195	**195** 11.9	477	**76** 20	**95** 25	**207** 3000	**276** 4000	**300** 4350	**556** 4919	**753** 6663	**33** 45	**451** 3989	**611** 5408
TG 0240	**238** 14.5	393	**76** 20	**95** 25	**207** 3000	**276** 4000	**300** 4350	**677** 5991	**913** 8081	**32** 44	**582** 5152	**776** 6865
TG 0280	**280** 17.1	334	**76** 20	**95** 25	**207** 3000	**276** 4000	**300** 4350	**796** 7044	**1073** 9499	**31** 42	**675** 5972	**870** 7699
TG 0310	**310** 18.9	303	**76** 20	**95** 25	**207** 3000	**276** 4000	**300** 4350	**924** 8184	**1229** 10817	**31** 41	**778** 6882	**1005** 8893
TG 0335	**337** 20.6	277	**76** 20	**95** 25	**207** 3000	**276** 4000	**300** 4350	**964** 8533	**1297** 11479	**30** 41	**843** 7458	**1117** 9889
TG 0360	**360** 22.2	259	**76** 20	**95** 25	**172** 2500	**241** 3500	**300** 4350	**894** 7913	**1254** 11093	**29** 39	**703** 6224	**1017** 9007
TG 0405	**405** 24.7	232	**76** 20	**95** 25	**172** 2500	**241** 3500	**300** 4350	**942** 8336	**1342** 11877	**27** 37	**791** 7002	**1145** 10133
TG 0475	**477** 29.1	237	**76** 20	**114** 30	**138** 2000	**207** 3000	**300** 4350	**887** 7853	**1372** 12145	**28** 38	**740** 6549	**1120** 9909
TG 0530	**528** 32.3	213	**76** 20	**114** 30	**138** 2000	**172** 2500	**300** 4350	**983** 8701	**1253** 11086	**23** 31	**874** 7737	**1091** 9657
TG 0625	**623** 38.0	182	**76** 20	**114** 30	**121** 1750	**155** 2250	**300** 4350	**986** 8727	**1291** 11424	**20** 27	**895** 7924	**1165** 10312
TG 0785	**786** 48.0	143	**76** 20	**114** 30	**103** 1500	**138** 2000	**300** 4350	**1044** 9239	**1428** 12636	**17** 23	**991** 8772	**1341** 11876
TG 0960	**959** 58.5	118	**76** 20	**114** 30	**69** 1000	**103** 1500	**300** 4350	**773** 6843	**1268** 11227	**12** 16	**763** 6752	**1177** 10419

Performance data based on testing using 10W40 oil with a viscosity of 200 SUS at 54° C (130° F.). Performance data is typical. Actual data may vary slightly from one production motor to another.

Les donnees sur les performances sont basees sur des tests utilisant de l'huile 10W40 d'une viscosite de 200 SUS a 54°C (130°F). Ces donnees correspondent a des situations typiques. Les donnees reelles peuvent varier legerement d'un moteur de production a l'autre.

Leistungsdaten sind gemessen mit SAE 10W40 bei einer Viskositaet von 43,1 Cst bei 54°C. Geringfuegige Abweichungen von den Katalog-daten sind moeglich.

Datos tecnicos obtenidos con aceite 10W40 de 200 SUS de visco-sidad a 54°C (130°F). Los datos proporcionados son valores tipcos. Los valores exactos reales podrian tener una pequena variacion entre distintos motores.

* Intermittent operation rating applies to 10% of every minute.
Intermittierende Werte maximal 10% von jeder Betriebsminute.
Fonctionnement interm. 10% max. de chaque minute d`utilisation.
Capacidad de funcionamiento intermitente valida para 10% por cada minuto.

WARNING
This product can expose you to chemicals including lead and DEHP, which are known to the State of California to cause cancer, and birth defects or other reproductive harm. For more information go to www.p65warnings.ca.gov

Tel: +45 63 12 83 00 | Email: ps@hymatik.com | www.hymatik.com | Hvidkaervej 27a, DK-5250 Odense SV, Denmark

TG 0140

8.6 cu in / rev

PRESSURE (PSID)

Flow (GPM)	500	1000	1500	2000	2500	3000	3500	4000
.5	519 **9**	1060 **4**						
1	540 **22**	1090 **17**	1635 **11**	2180 **6**				
2	569 **49**	1156 **43**	1730 **36**	2286 **30**	2827 **23**	3368 **19**	3899 **12**	4447 **12**
3	565 **75**	1159 **69**	1744 **62**	2321 **55**	2899 **47**	3477 **40**	4048 **33**	4608 **29**
4	564 **102**	1170 **94**	1768 **87**	2358 **80**	2943 **72**	3517 **64**	4082 **57**	4644 **52**
5	556 **128**	1170 **120**	1776 **112**	2375 **105**	2968 **97**	3556 **89**	4135 **81**	4701 **76**
7	540 **182**	1160 **172**	1779 **164**	2390 **155**	2994 **146**	3592 **138**	4181 **130**	4763 **123**
9	515 **235**	1143 **225**	1768 **215**	2385 **206**	2996 **196**	3601 **187**	4199 **179**	4794 **171**
12	471 **315**	1096 **303**	1729 **292**	2356 **281**	2974 **271**	3587 **261**	4193 **252**	4794 **243**
15	418 **395**	1042 **381**	1673 **368**	2307 **357**	2933 **346**	3549 **336**	4163 **325**	4771 **314**
20	299 **528**	931 **512**	1565 **497**	2198 **484**	2825 **472**	3455 **459**	4078 **447**	4692 **435**
25	173 **660**	794 **643**	1426 **626**	2059 **612**	2695 **598**	3332 **583**	3961 **569**	4579 **555**

TORQUE (LB IN) 3961
SPEED (RPM) 569

■ Cont. □ Int.

Intermittent operation rating applies to 10% of every minute.

Fonctionnement interm. 10% max. de chaque minute d`utilisation.

Performance data based on testing using 10W40 oil with a viscosity of 200 SUS at 54° C (130° F.). Performance data is typical. Actual data may vary slightly from one production motor to another.

Les donnees sur les performances sont basees sur des tests utilisant de l'huile 10W40 d'une viscosite de 200 SUS a 54°C (130°F). Ces donnees correspondent a des situations typiques. Les donnees reelles peuvent varier legerement d'un moteur de production a l'autre.

Intermittierende Werte maximal 10% von jeder Betriebsminute.

Capacidad de funcionamiento intermitente valida para 10% por cada minuto.

Leistungsdaten sind gemessen mit SAE 10W40 bei einer Viskositaet von 43,1 Cst bei 54°C. Geringfuegige Abweichungen von den Katalogdaten sind moeglich.

Datos tecnicos obtenidos con aceite 10W40 de 200 SUS de viscosidad a 54°C (130°F). Los datos proporcionados son valores tipcos. Los valores exactos reales podrian tener una pequena variacion entre distintos motores.

WARNING
This product can expose you to chemicals including lead and DEHP, which are known to the State of California to cause cancer, and birth defects or other reproductive harm. For more information go to www.p65warnings.ca.gov

Tel: +45 63 12 83 00 | Email: ps@hymatik.com | www.hymatik.com | Hvidkaervej 27a, DK-5250 Odense SV, Denmark

TG 0170

10.3 cu in / rev

PRESSURE (PSID)

Flow (GPM)	500	1000	1500	2000	2500	3000	3500	4000
.5	620 **9**	1284 **7**	1945 **5**	2613 **4**	3293 **3**	3983 **2**		
1	652 **20**	1337 **18**	2006 **16**	2683 **14**	3375 **12**	4063 **11**	4744 **8**	5402 **8**
2	678 **42**	1390 **40**	2105 **37**	2822 **35**	3535 **32**	4226 **30**	4909 **27**	5587 **25**
3	678 **64**	1397 **61**	2117 **58**	2836 **56**	3554 **53**	4263 **50**	4963 **46**	5652 **44**
4	679 **86**	1409 **83**	2142 **80**	2872 **77**	3596 **74**	4310 **71**	5021 **67**	5716 **64**
5	675 **108**	1413 **104**	2150 **101**	2885 **98**	3616 **94**	4339 **91**	5057 **87**	5761 **83**
7	661 **153**	1405 **148**	2152 **143**	2900 **140**	3642 **136**	4374 **132**	5101 **127**	5818 **123**
9	632 **197**	1385 **191**	2140 **186**	2891 **181**	3638 **177**	4380 **173**	5114 **168**	5838 **163**
12	583 **263**	1334 **256**	2096 **250**	2860 **244**	3617 **239**	4362 **234**	5101 **228**	5823 **223**
15	524 **330**	1275 **322**	2035 **314**	2804 **308**	3572 **302**	4327 **296**	5070 **289**	5801 **283**
20	382 **442**	1143 **432**	1908 **422**	2683 **413**	3455 **406**	4216 **399**	4972 **391**	5714 **383**
25	239 **554**	983 **543**	1747 **531**	2523 **520**	3299 **511**	4071 **501**	4839 **492**	5591 **483**

TORQUE (LB IN) 4839
SPEED (RPM) 492

■ Cont. □ Int.

Intermittent operation rating applies to 10% of every minute.

Fonctionnement interm. 10% max. de chaque minute d`utilisation.

Performance data based on testing using 10W40 oil with a viscosity of 200 SUS at 54° C (130° F.). Performance data is typical. Actual data may vary slightly from one production motor to another.

Les donnees sur les performances sont basees sur des tests utilisant de l'huile 10W40 d'une viscosite de 200 SUS a 54°C (130°F). Ces donnees correspondent a des situations typiques. Les donnees reelles peuvent varier legerement d'un moteur de production a l'autre.

Intermittierende Werte maximal 10% von jeder Betriebsminute.

Capacidad de funcionamiento intermitente valida para 10% por cada minuto.

Leistungsdaten sind gemessen mit SAE 10W40 bei einer Viskositaet von 43,1 Cst bei 54°C. Geringfuegige Abweichungen von den Katalogdaten sind moeglich.

Datos tecnicos obtenidos con aceite 10W40 de 200 SUS de viscosidad a 54°C (130°F). Los datos proporcionados son valores tipcos. Los valores exactos reales podrian tener una pequena variacion entre distintos motores.

WARNING
This product can expose you to chemicals including lead and DEHP, which are known to the State of California to cause cancer, and birth defects or other reproductive harm. For more information go to www.p65warnings.ca.gov

Tel: +45 63 12 83 00 | Email: ps@hymatik.com | www.hymatik.com | Hvidkaervej 27a, DK-5250 Odense SV, Denmark

TG 0195

11.9 cu in / rev

PRESSURE (PSID)

Flow (GPM)	500	1000	1500	2000	2500	3000	3500	4000
.5	733 **7**	1503 **3**						
1	761 **16**	1546 **13**	2326 **8**	3104 **3**				
2	799 **35**	1638 **32**	2465 **27**	3270 **21**	4046 **16**	4813 **11**	5589 **7**	6375 **6**
3	794 **55**	1639 **50**	2476 **45**	3303 **39**	4132 **34**	4970 **28**	5792 **23**	6595 **19**
4	794 **74**	1654 **69**	2509 **64**	3356 **58**	4196 **52**	5023 **46**	5830 **40**	6635 **35**
5	783 **93**	1653 **88**	2517 **83**	3375 **76**	4224 **70**	5065 **64**	5895 **58**	6710 **52**
7	762 **131**	1637 **126**	2514 **120**	3384 **113**	4245 **106**	5098 **99**	5940 **92**	6772 **86**
9	731 **170**	1616 **164**	2499 **157**	3373 **150**	4239 **142**	5093 **135**	5936 **127**	6774 **120**
12	677 **228**	1562 **221**	2455 **213**	3343 **205**	4217 **196**	5081 **188**	5934 **179**	6776 **172**
15	613 **285**	1498 **278**	2389 **269**	3283 **260**	4169 **251**	5040 **242**	5907 **232**	6765 **233**
20	448 **381**	1350 **373**	2245 **363**	3141 **353**	4031 **342**	4919 **331**	5798 **321**	6663 **310**
25	334 **477**	1158 **468**	2044 **457**	2941 **445**	3837 **433**	4729 **421**	5612 **409**	6500 **397**

TORQUE (LB IN) 5612
SPEED (RPM) 409

■ Cont. □ Int.

Intermittent operation rating applies to 10% of every minute.

Fonctionnement interm. 10% max. de chaque minute d`utilisation.

Performance data based on testing using 10W40 oil with a viscosity of 200 SUS at 54° C (130° F.). Performance data is typical. Actual data may vary slightly from one production motor to another.

Les donnees sur les performances sont basees sur des tests utilisant de l'huile 10W40 d'une viscosite de 200 SUS a 54°C (130°F). Ces donnees correspondent a des situations typiques. Les donnees reelles peuvent varier legerement d'un moteur de production a l'autre.

Intermittierende Werte maximal 10% von jeder Betriebsminute.

Capacidad de funcionamiento intermitente valida para 10% por cada minuto.

Leistungsdaten sind gemessen mit SAE 10W40 bei einer Viskositaet von 43,1 Cst bei 54°C. Geringfuegige Abweichungen von den Katalogdaten sind moeglich.

Datos tecnicos obtenidos con aceite 10W40 de 200 SUS de viscosidad a 54°C (130°F). Los datos proporcionados son valores tipcos. Los valores exactos reales podrian tener una pequena variacion entre distintos motores.

WARNING
This product can expose you to chemicals including lead and DEHP, which are known to the State of California to cause cancer, and birth defects or other reproductive harm. For more information go to www.p65warnings.ca.gov

Tel: +45 63 12 83 00 | Email: ps@hymatik.com | www.hymatik.com | Hvidkaervej 27a, DK-5250 Odense SV, Denmark

TG 0240

14.5 cu in / rev

PRESSURE (PSID)

	500	1000	1500	2000	2500	3000	3500	4000
.5	932 **6**	1907 **4**	2894 **2**					
1	960 **14**	1954 **12**	2950 **9**	3943 **6**	4939 **3**	5930 **2**		
2	988 **30**	2031 **27**	3065 **24**	4090 **20**	5107 **17**	6100 **14**	7068 **11**	8037 **9**
3	983 **45**	2029 **42**	3071 **39**	4101 **35**	5128 **31**	6161 **27**	7182 **23**	8184 **20**
4	978 **61**	2037 **58**	3090 **54**	4136 **49**	5176 **45**	6207 **42**	7230 **37**	8234 **33**
5	962 **77**	2030 **73**	3092 **69**	4144 **64**	5190 **60**	6231 **56**	7259 **51**	8271 **47**
7	933 **108**	2005 **104**	3078 **99**	4141 **94**	5194 **89**	6239 **84**	7275 **78**	8298 **73**
9	890 **140**	1972 **135**	3048 **129**	4112 **123**	5169 **117**	6213 **112**	7245 **106**	8271 **100**
12	832 **187**	1912 **181**	2996 **175**	4071 **167**	5125 **161**	6163 **154**	7195 **147**	8224 **140**
15	753 **235**	1832 **228**	2921 **220**	4009 **212**	5081 **204**	6137 **196**	7182 **188**	8212 **180**
20	559 **314**	1654 **306**	2744 **297**	3834 **287**	4917 **278**	5991 **268**	7045 **258**	8081 **248**
25	524 **393**	1427 **384**	2507 **373**	3595 **363**	4690 **352**	5780 **340**	6853 **328**	7913 **317**

Flow (GPM)

■ Cont. □ Int.

Intermittent operation rating applies to 10% of every minute.

Fonctionnement interm. 10% max. de chaque minute d`utilisation.

Performance data based on testing using 10W40 oil with a viscosity of 200 SUS at 54° C (130° F.). Performance data is typical. Actual data may vary slightly from one production motor to another.

Les donnees sur les performances sont basees sur des tests utilisant de l'huile 10W40 d'une viscosite de 200 SUS a 54°C (130°F). Ces donnees correspondent a des situations typiques. Les donnees reelles peuvent varier legerement d'un moteur de production a l'autre.

Intermittierende Werte maximal 10% von jeder Betriebsminute.

Capacidad de funcionamiento intermitente valida para 10% por cada minuto.

Leistungsdaten sind gemessen mit SAE 10W40 bei einer Viskositaet von 43,1 Cst bei 54°C. Geringfuegige Abweichungen von den Katalogdaten sind moeglich.

Datos tecnicos obtenidos con aceite 10W40 de 200 SUS de viscosidad a 54°C (130°F). Los datos proporcionados son valores tipcos. Los valores exactos reales podrian tener una pequena variacion entre distintos motores.

WARNING
This product can expose you to chemicals including lead and DEHP, which are known to the State of California to cause cancer, and birth defects or other reproductive harm. For more information go to www.p65warnings.ca.gov

Tel: +45 63 12 83 00 | Email: ps@hymatik.com | www.hymatik.com | Hvidkaervej 27a, DK-5250 Odense SV, Denmark

TG 0280

17.1 cu in / rev

PRESSURE (PSID)

Flow (GPM)	500	1000	1500	2000	2500	3000	3500	4000
.5	1056 **5**	2177 **4**	3323 **2**	4512 **1**				
1	1087 **12**	2223 **10**	3378 **8**	4552 **6**	5734 **5**	6930 **3**	8135 **3**	9350 **2**
2	1124 **25**	2313 **23**	3513 **21**	4700 **18**	5880 **16**	7060 **14**	8239 **12**	9400 **11**
3	1124 **39**	2323 **36**	3532 **34**	4740 **31**	5940 **28**	7143 **25**	8346 **22**	9536 **19**
4	1126 **52**	2346 **49**	3568 **47**	4786 **43**	6004 **40**	7214 **37**	8415 **33**	9596 **30**
5	1115 **65**	2350 **62**	3582 **59**	4816 **56**	6044 **52**	7256 **49**	8457 **45**	9641 **41**
7	1091 **92**	2338 **88**	3586 **85**	4832 **80**	6072 **76**	7301 **72**	8515 **67**	9706 **63**
9	1046 **118**	2309 **114**	3564 **110**	4811 **105**	6051 **101**	7280 **96**	8499 **90**	9707 **85**
12	981 **159**	2242 **154**	3506 **148**	4757 **143**	5992 **137**	7221 **132**	8444 **125**	9652 **118**
15	898 **199**	2164 **193**	3437 **186**	4702 **180**	5951 **174**	7187 **168**	8416 **160**	9625 **152**
20	691 **266**	1976 **258**	3255 **250**	4529 **243**	5795 **235**	7044 **227**	8275 **218**	9499 **209**
25	703 **334**	1726 **324**	2987 **314**	4260 **305**	5540 **296**	6815 **286**	8071 **276**	9311 **267**

TORQUE (LB IN) 8071
SPEED (RPM) 276

☐ Cont. ☐ Int.

Intermittent operation rating applies to 10% of every minute.

Fonctionnement interm. 10% max. de chaque minute d`utilisation.

Performance data based on testing using 10W40 oil with a viscosity of 200 SUS at 54° C (130° F.). Performance data is typical. Actual data may vary slightly from one production motor to another.

Les donnees sur les performances sont basees sur des tests utilisant de l'huile 10W40 d'une viscosite de 200 SUS a 54°C (130°F). Ces donnees correspondent a des situations typiques. Les donnees reelles peuvent varier legerement d'un moteur de production a l'autre.

Intermittierende Werte maximal 10% von jeder Betriebsminute.

Capacidad de funcionamiento intermitente valida para 10% por cada minuto.

Leistungsdaten sind gemessen mit SAE 10W40 bei einer Viskositaet von 43,1 Cst bei 54°C. Geringfuegige Abweichungen von den Katalogdaten sind moeglich.

Datos tecnicos obtenidos con aceite 10W40 de 200 SUS de viscosidad a 54°C (130°F). Los datos proporcionados son valores tipcos. Los valores exactos reales podrian tener una pequena variacion entre distintos motores.

⚠ **WARNING**
This product can expose you to chemicals including lead and DEHP, which are known to the State of California to cause cancer, and birth defects or other reproductive harm. For more information go to www.p65warnings.ca.gov

Tel: +45 63 12 83 00 | Email: ps@hymatik.com | www.hymatik.com | Hvidkaervej 27a, DK-5250 Odense SV, Denmark

TG 0310

18.9 cu in / rev

PRESSURE (PSID)

Flow (GPM)	500	1000	1500	2000	2500	3000	3500	4000
.5	1188 **4**	2464 **3**	3766 **2**	5102 **1**				
1	1220 **11**	2508 **9**	3812 **7**	5145 **5**	6477 **4**	7822 **2**	9181 **2**	10530 **1**
2	1259 **23**	2598 **21**	3950 **19**	5298 **17**	6642 **14**	7972 **13**	9282 **10**	10574 **9**
3	1257 **35**	2606 **33**	3889 **30**	5332 **28**	6688 **25**	8044 **22**	9392 **19**	10693 **16**
4	1259 **47**	2628 **44**	4003 **42**	5377 **39**	6749 **36**	8114 **33**	9461 **29**	10780 **26**
5	1247 **59**	2629 **56**	4252 **52**	5401 **50**	6782 **47**	8149 **42**	9499 **39**	10823 **35**
7	1218 **84**	2614 **80**	4013 **76**	5413 **72**	6806 **68**	8184 **64**	9543 **60**	10874 **56**
9	1167 **107**	2574 **103**	3983 **99**	5386 **94**	6780 **90**	8162 **85**	9529 **80**	10877 **75**
12	1089 **143**	2493 **139**	3904 **133**	5308 **128**	6696 **122**	8075 **117**	9443 **110**	10793 **102**
15	995 **180**	2400 **173**	3817 **167**	5225 **160**	6621 **154**	8003 **148**	9371 **140**	10718 **131**
20	769 **241**	2194 **234**	3618 **225**	5043 **218**	6462 **210**	7863 **203**	9238 **194**	10588 **183**
25	626 **303**	1955 **294**	3359 **284**	4771 **274**	6251 **265**	7608 **256**	8998 **246**	10360 **236**

TORQUE (LB IN) 7608
SPEED (RPM) 256

■ Cont. □ Int.

Intermittent operation rating applies to 10% of every minute.

Fonctionnement interm. 10% max. de chaque minute d`utilisation.

Performance data based on testing using 10W40 oil with a viscosity of 200 SUS at 54° C (130° F.). Performance data is typical. Actual data may vary slightly from one production motor to another.

Les donnees sur les performances sont basees sur des tests utilisant de l'huile 10W40 d'une viscosite de 200 SUS a 54°C (130°F). Ces donnees correspondent a des situations typiques. Les donnees reelles peuvent varier legerement d'un moteur de production a l'autre.

Intermittierende Werte maximal 10% von jeder Betriebsminute.

Capacidad de funcionamiento intermitente valida para 10% por cada minuto.

Leistungsdaten sind gemessen mit SAE 10W40 bei einer Viskositaet von 43,1 Cst bei 54°C. Geringfuegige Abweichungen von den Katalogdaten sind moeglich.

Datos tecnicos obtenidos con aceite 10W40 de 200 SUS de viscosidad a 54°C (130°F). Los datos proporcionados son valores tipcos. Los valores exactos reales podrian tener una pequena variacion entre distintos motores.

WARNING
This product can expose you to chemicals including lead and DEHP, which are known to the State of California to cause cancer, and birth defects or other reproductive harm. For more information go to www.p65warnings.ca.gov

Tel: +45 63 12 83 00 | Email: ps@hymatik.com | www.hymatik.com | Hvidkaervej 27a, DK-5250 Odense SV, Denmark

TG 0335

20.6 cu in / rev

PRESSURE (PSID)

Flow (GPM)	500	1000	1500	2000	2500	3000	3500	4000
.5	1297 **4**	2699 **3**	4128 **1**	5584 **1**				
1	1329 **10**	2741 **8**	4176 **7**	5630 **5**	7084 **4**	8551 **2**	10036 **2**	11496 **1**
2	1369 **21**	2832 **19**	4308 **17**	5787 **15**	7265 **13**	8718 **11**	10136 **9**	11534 **8**
3	1366 **32**	2838 **30**	4326 **27**	5817 **25**	7301 **22**	8781 **20**	10248 **17**	11685 **14**
4	1368 **43**	2858 **40**	4358 **38**	5861 **35**	7358 **32**	8850 **29**	10317 **25**	11748 **22**
5	1355 **54**	2858 **51**	4368 **48**	5880 **45**	7386 **42**	8880 **38**	10352 **34**	11791 **30**
7	1323 **76**	2840 **73**	4363 **69**	5888 **65**	7407 **61**	8908 **57**	10384 **53**	11829 **47**
9	1266 **98**	2791 **94**	4326 **90**	5856 **85**	7376 **81**	8884 **76**	10372 **71**	11834 **64**
12	1177 **131**	2698 **127**	4230 **121**	5759 **116**	7273 **110**	8773 **105**	10261 **98**	11726 **90**
15	1075 **165**	2594 **159**	4127 **153**	5654 **146**	7170 **140**	8670 **134**	10153 **126**	11613 **116**
20	833 **221**	2372 **214**	3915 **205**	5463 **197**	7008 **189**	8533 **182**	10026 **173**	11479 **161**
25	678 **277**	2142 **269**	3663 **259**	5189 **248**	6726 **239**	8257 **230**	9757 **219**	11219 **209**

TORQUE (LB IN) 8257
SPEED (RPM) 230

☐ Cont. ☐ Int.

Intermittent operation rating applies to 10% of every minute.

Fonctionnement interm. 10% max. de chaque minute d`utilisation.

Performance data based on testing using 10W40 oil with a viscosity of 200 SUS at 54° C (130° F.). Performance data is typical. Actual data may vary slightly from one production motor to another.

Les donnees sur les performances sont basees sur des tests utilisant de l'huile 10W40 d'une viscosite de 200 SUS a 54°C (130°F). Ces donnees correspondent a des situations typiques. Les donnees reelles peuvent varier legerement d'un moteur de production a l'autre.

Intermittierende Werte maximal 10% von jeder Betriebsminute.

Capacidad de funcionamiento intermitente valida para 10% por cada minuto.

Leistungsdaten sind gemessen mit SAE 10W40 bei einer Viskositaet von 43,1 Cst bei 54°C. Geringfuegige Abweichungen von den Katalogdaten sind moeglich.

Datos tecnicos obtenidos con aceite 10W40 de 200 SUS de viscosidad a 54°C (130°F). Los datos proporcionados son valores tipcos. Los valores exactos reales podrian tener una pequena variacion entre distintos motores.

WARNING
This product can expose you to chemicals including lead and DEHP, which are known to the State of California to cause cancer, and birth defects or other reproductive harm. For more information go to www.p65warnings.ca.gov

Tel: +45 63 12 83 00 | Email: ps@hymatik.com | www.hymatik.com | Hvidkaervej 27a, DK-5250 Odense SV, Denmark

TG 0360

360 cm³ / rev (22.2 in³ / rev)

PRESSURE (PSID)

Flow (GPM)	500	1000	1500	2000	2500	3000	3500
.5	1386 **4**	2883 **3**	4410 **1**	5965 **1**			
1	1420 **9**	2928 **7**	4461 **7**	6014 **5**	7567 **4**	9135 **2**	10721 **2**
2	1462 **20**	3025 **18**	4602 **16**	6182 **14**	7761 **12**	9313 **10**	10828 **8**
3	1459 **30**	3031 **28**	4621 **25**	6214 **23**	7799 **21**	9380 **19**	10947 **16**
4	1461 **40**	3053 **37**	4655 **36**	6261 **33**	7884 **30**	9454 **27**	11021 **23**
5	1447 **51**	3053 **48**	4666 **45**	6281 **42**	7890 **39**	9486 **36**	11059 **32**
7	1413 **71**	3034 **68**	4661 **65**	6290 **61**	7913 **57**	9516 **53**	11093 **50**
9	1352 **92**	2981 **88**	4621 **84**	6256 **80**	7879 **76**	9490 **71**	11080 **66**
12	1257 **123**	2882 **119**	4519 **113**	6152 **109**	7769 **103**	9372 **98**	10961 **92**
15	1148 **154**	2771 **149**	4409 **143**	6040 **137**	7659 **131**	9262 **125**	10846 **118**
20	890 **207**	2534 **200**	4182 **192**	5836 **184**	7486 **177**	9115 **170**	10710 **162**
25	724 **259**	2288 **252**	3913 **242**	5543 **232**	7185 **224**	8821 **215**	10423 **205**

TORQUE (LB IN) 8821
SPEED (RPM) 215

■ Cont. □ Int.

Intermittent operation rating applies to 10% of every minute.

Fonctionnement interm. 10% max. de chaque minute d`utilisation.

Performance data based on testing using 10W40 oil with a viscosity of 200 SUS at 54° C (130° F.). Performance data is typical. Actual data may vary slightly from one production motor to another.

Les donnees sur les performances sont basees sur des tests utilisant de l'huile 10W40 d'une viscosite de 200 SUS a 54°C (130°F). Ces donnees correspondent a des situations typiques. Les donnees reelles peuvent varier legerement d'un moteur de production a l'autre.

Intermittierende Werte maximal 10% von jeder Betriebsminute.

Capacidad de funcionamiento intermitente valida para 10% por cada minuto.

Leistungsdaten sind gemessen mit SAE 10W40 bei einer Viskositaet von 43,1 Cst bei 54°C. Geringfuegige Abweichungen von den Katalogdaten sind moeglich.

Datos tecnicos obtenidos con aceite 10W40 de 200 SUS de viscosidad a 54°C (130°F). Los datos proporcionados son valores tipcos. Los valores exactos reales podrian tener una pequena variacion entre distintos motores.

WARNING
This product can expose you to chemicals including lead and DEHP, which are known to the State of California to cause cancer, and birth defects or other reproductive harm. For more information go to www.p65warnings.ca.gov

Tel: +45 63 12 83 00 | Email: ps@hymatik.com | www.hymatik.com | Hvidkaervej 27a, DK-5250 Odense SV, Denmark

TG 0405

24.7 cu in / rev

PRESSURE (PSID)

Flow (GPM)	500	1000	1500	2000	2500	3000	3500
.5	1544 **4**	3178 **3**	4840 **2**	6515 **1**	8185 **1**		
1	1593 **8**	3256 **7**	4928 **6**	6607 **6**	8303 **5**	9987 **4**	11652 **3**
2	1636 **17**	3351 **16**	5084 **15**	6817 **14**	8550 **13**	10272 **12**	11978 **11**
3	1637 **27**	3365 **25**	5106 **23**	6847 **22**	8588 **21**	10314 **19**	12031 **18**
4	1645 **36**	3394 **34**	5159 **32**	6920 **30**	8668 **29**	10402 **27**	12130 **26**
5	1640 **45**	3408 **43**	5201 **41**	6983 **39**	8733 **37**	10466 **35**	12194 **33**
7	1606 **64**	3396 **61**	5211 **59**	7003 **56**	8772 **54**	10527 **51**	12271 **49**
9	1551 **82**	3350 **80**	5176 **77**	6981 **73**	8763 **70**	10519 **67**	12269 **64**
12	1428 **110**	3238 **107**	5075 **103**	6888 **99**	8670 **95**	10424 **91**	12172 **88**
15	1310 **138**	3112 **135**	4948 **130**	6759 **125**	8545 **120**	10306 **115**	12060 **111**
20	1136 **185**	2862 **181**	4692 **175**	6518 **168**	8336 **162**	10122 **156**	11877 **151**
25			4492 **219**	6303 **212**	8084 **204**	9848 **197**	11585 **190**

TORQUE (LB IN) 9848
SPEED (RPM) 197

☒ Cont. ☐ Int.

Intermittent operation rating applies to 10% of every minute.

Fonctionnement interm. 10% max. de chaque minute d`utilisation.

Performance data based on testing using 10W40 oil with a viscosity of 200 SUS at 54° C (130° F.). Performance data is typical. Actual data may vary slightly from one production motor to another.

Les donnees sur les performances sont basees sur des tests utilisant de l'huile 10W40 d'une viscosite de 200 SUS a 54°C (130°F). Ces donnees correspondent a des situations typiques. Les donnees reelles peuvent varier legerement d'un moteur de production a l'autre.

Intermittierende Werte maximal 10% von jeder Betriebsminute.

Capacidad de funcionamiento intermitente valida para 10% por cada minuto.

Leistungsdaten sind gemessen mit SAE 10W40 bei einer Viskositaet von 43,1 Cst bei 54°C. Geringfuegige Abweichungen von den Katalogdaten sind moeglich.

Datos tecnicos obtenidos con aceite 10W40 de 200 SUS de viscosidad a 54°C (130°F). Los datos proporcionados son valores tipcos. Los valores exactos reales podrian tener una pequena variacion entre distintos motores.

WARNING
This product can expose you to chemicals including lead and DEHP, which are known to the State of California to cause cancer, and birth defects or other reproductive harm. For more information go to www.p65warnings.ca.gov

Tel: +45 63 12 83 00 | Email: ps@hymatik.com | www.hymatik.com | Hvidkaervej 27a, DK-5250 Odense SV, Denmark

TG 0475

29.1 cu in / rev

PRESSURE (PSID)

Flow (GPM)	500	1000	1500	2000	2500	3000
.5	1768 **3**	3732 **3**	5733 **2**	7744 **1**	9762 **1**	
1	1868 **7**	3878 **7**	5879 **6**	7851 **5**	9838 **4**	11830 **3**
2	1964 **15**	4055 **14**	6180 **14**	8237 **12**	10241 **10**	12136 **8**
3	1972 **23**	4074 **22**	6208 **21**	8321 **19**	10379 **17**	12355 **13**
4	2005 **31**	4135 **30**	6287 **29**	8382 **27**	10463 **24**	12496 **20**
5	2004 **39**	4129 **38**	6304 **37**	8428 **34**	10514 **31**	12544 **26**
7	1990 **55**	4133 **54**	6308 **52**	8445 **50**	10555 **45**	12602 **40**
9	1924 **70**	4104 **69**	6285 **68**	8430 **65**	10528 **60**	12608 **54**
12	1775 **94**	3974 **93**	6157 **91**	8328 **87**	10446 **82**	12528 **75**
15	1619 **118**	3784 **116**	5990 **114**	8188 **110**	10311 **104**	12372 **96**
20	1314 **157**	3373 **156**	5629 **153**	7853 **149**	10038 **141**	12145 **132**
25	1141 **197**	3029 **196**	5220 **193**	7427 **189**	9629 **182**	11757 **174**
30	606 **237**	2505 **236**	4649 **233**	6766 **230**	8878 **224**	10989 **219**

TORQUE (LB IN) 6766
SPEED (RPM) 230

☒ Cont. ☐ Int.

Intermittent operation rating applies to 10% of every minute.

Fonctionnement interm. 10% max. de chaque minute d`utilisation.

Performance data based on testing using 10W40 oil with a viscosity of 200 SUS at 54° C (130° F.). Performance data is typical. Actual data may vary slightly from one production motor to another.

Les donnees sur les performances sont basees sur des tests utilisant de l'huile 10W40 d'une viscosite de 200 SUS a 54°C (130°F). Ces donnees correspondent a des situations typiques. Les donnees reelles peuvent varier legerement d'un moteur de production a l'autre.

Intermittierende Werte maximal 10% von jeder Betriebsminute.

Capacidad de funcionamiento intermitente valida para 10% por cada minuto.

Leistungsdaten sind gemessen mit SAE 10W40 bei einer Viskositaet von 43,1 Cst bei 54°C. Geringfuegige Abweichungen von den Katalogdaten sind moeglich.

Datos tecnicos obtenidos con aceite 10W40 de 200 SUS de viscosidad a 54°C (130°F). Los datos proporcionados son valores tipcos. Los valores exactos reales podrian tener una pequena variacion entre distintos motores.

⚠ **WARNING**
This product can expose you to chemicals including lead and DEHP, which are known to the State of California to cause cancer, and birth defects or other reproductive harm. For more information go to www.p65warnings.ca.gov

Tel: +45 63 12 83 00 | Email: ps@hymatik.com | www.hymatik.com | Hvidkaervej 27a, DK-5250 Odense SV, Denmark

TG 0530

32.2 cu in / rev

Flow (GPM)	PRESSURE (PSID) 500	1000	1500	2000	2500
.5	2080 **3**	4256 **3**	6479 **2**	8726 **2**	11012 **1**
1	2158 **7**	4372 **6**	6592 **6**	8779 **5**	10994 **4**
2	2246 **14**	4567 **13**	6869 **12**	9126 **11**	11376 **9**
3	2242 **21**	4578 **20**	6916 **19**	9237 **17**	11500 **14**
4	2253 **28**	4625 **27**	6977 **25**	9296 **23**	11586 **20**
5	2235 **35**	4629 **34**	7002 **32**	9333 **29**	11626 **26**
7	2182 **49**	4599 **48**	7006 **46**	9362 **42**	11659 **38**
9	2095 **63**	4535 **62**	6960 **59**	9330 **55**	11650 **50**
12	1943 **85**	4390 **83**	6825 **80**	9217 **75**	11549 **69**
15	1753 **106**	4199 **104**	6638 **100**	9052 **95**	11408 **87**
20	1327 **141**	3783 **139**	6262 **135**	8701 **129**	11086 **120**
25	1011 **177**	3300 **175**	5751 **171**	8210 **165**	10639 **158**
30	269 **213**	2698 **211**	5083 **208**	7415 **203**	9814 **197**

TORQUE (LB IN) 9814
SPEED (RPM) 197

■ Cont. □ Int.

Intermittent operation rating applies to 10% of every minute.

Fonctionnement interm. 10% max. de chaque minute d`utilisation.

Performance data based on testing using 10W40 oil with a viscosity of 200 SUS at 54° C (130° F.). Performance data is typical. Actual data may vary slightly from one production motor to another.

Les donnees sur les performances sont basees sur des tests utilisant de l'huile 10W40 d'une viscosite de 200 SUS a 54°C (130°F). Ces donnees correspondent a des situations typiques. Les donnees reelles peuvent varier legerement d'un moteur de production a l'autre.

Intermittierende Werte maximal 10% von jeder Betriebsminute.

Capacidad de funcionamiento intermitente valida para 10% por cada minuto.

Leistungsdaten sind gemessen mit SAE 10W40 bei einer Viskositaet von 43,1 Cst bei 54°C. Geringfuegige Abweichungen von den Katalogdaten sind moeglich.

Datos tecnicos obtenidos con aceite 10W40 de 200 SUS de viscosidad a 54°C (130°F). Los datos proporcionados son valores tipcos. Los valores exactos reales podrian tener una pequena variacion entre distintos motores.

⚠ WARNING
This product can expose you to chemicals including lead and DEHP, which are known to the State of California to cause cancer, and birth defects or other reproductive harm. For more information go to www.p65warnings.ca.gov

Parker Hannifin Corporation
Pump & Motor Division
Greeneville, Tennessee, USA

Tel: +45 63 12 83 00 | Email: ps@hymatik.com | www.hymatik.com | Hvidkaervej 27a, DK-5250 Odense SV, Denmark

TG 0625

38.0 cu in / rev

Flow (GPM)	PRESSURE (PSID) 500	1000	1500	1750	2250
.5	1939 **2**	4593 **1**			
1	2087 **5**	4665 **3**	7283 **2**	8680 **2**	11579 **1**
2	2338 **11**	4991 **9**	7590 **8**	8853 **7**	11458 **5**
3	2386 **17**	5101 **15**	7753 **13**	9055 **12**	11689 **9**
4	2457 **23**	5202 **21**	7872 **19**	9174 **17**	11769 **14**
5	2479 **29**	5246 **27**	7943 **25**	9242 **23**	11821 **18**
7	2464 **41**	5273 **39**	7995 **36**	9306 **34**	11859 **28**
9	2401 **53**	5223 **51**	7993 **48**	9337 **45**	11935 **39**
12	2254 **71**	5092 **69**	7886 **65**	9239 **62**	11900 **54**
15	2052 **89**	4901 **87**	7721 **83**	9086 **80**	11763 **70**
20	1600 **120**	4490 **117**	7334 **112**	8725 **109**	11424 **98**
25	1063 **151**	3933 **148**	6818 **144**	8235 **140**	11021 **131**
30	359 **182**	3250 **180**	6074 **176**	7443 **172**	10179 **165**

TORQUE (LB IN) 7443
SPEED (RPM) 172

☐ Cont. ☐ Int.

Intermittent operation rating applies to 10% of every minute.

Fonctionnement interm. 10% max. de chaque minute d`utilisation.

Performance data based on testing using 10W40 oil with a viscosity of 200 SUS at 54° C (130° F.). Performance data is typical. Actual data may vary slightly from one production motor to another.

Les donnees sur les performances sont basees sur des tests utilisant de l'huile 10W40 d'une viscosite de 200 SUS a 54°C (130°F). Ces donnees correspondent a des situations typiques. Les donnees reelles peuvent varier legerement d'un moteur de production a l'autre.

Intermittierende Werte maximal 10% von jeder Betriebsminute.

Capacidad de funcionamiento intermitente valida para 10% por cada minuto.

Leistungsdaten sind gemessen mit SAE 10W40 bei einer Viskositaet von 43,1 Cst bei 54°C. Geringfuegige Abweichungen von den Katalogdaten sind moeglich.

Datos tecnicos obtenidos con aceite 10W40 de 200 SUS de viscosidad a 54°C (130°F). Los datos proporcionados son valores tipcos. Los valores exactos reales podrian tener una pequena variacion entre distintos motores.

WARNING
This product can expose you to chemicals including lead and DEHP, which are known to the State of California to cause cancer, and birth defects or other reproductive harm. For more information go to www.p65warnings.ca.gov

Tel: +45 63 12 83 00 | Email: ps@hymatik.com | www.hymatik.com | Hvidkaervej 27a, DK-5250 Odense SV, Denmark

TG 0785

48.0 cu in / rev

Flow (GPM)	PRESSURE (PSID) 500	1000	1500	2000
.5	2910 **2**	6153 **2**	9607 **1**	12950 **1**
1	3011 **4**	6296 **4**	9670 **3**	12919 **3**
2	3217 **9**	6536 **8**	9935 **7**	13060 **6**
3	3220 **14**	6613 **13**	9977 **11**	13079 **9**
4	3265 **19**	6679 **17**	10021 **15**	13078 **13**
5	3263 **23**	6703 **22**	10047 **19**	13103 **16**
7	3218 **33**	6722 **31**	10068 **28**	13062 **24**
9	3107 **43**	6664 **41**	10108 **36**	13185 **31**
12	2892 **57**	6489 **55**	9959 **49**	13082 **42**
15	2643 **71**	6238 **69**	9733 **62**	12938 **54**
20	2044 **95**	5673 **92**	9239 **85**	12636 **75**
25	2313 **119**	4976 **117**	8571 **110**	12073 **101**
30	496 **143**	4104 **141**	7582 **137**	11024 **130**

TORQUE (LB IN) 11024
SPEED (RPM) 130

TG 0960

58.5 cu in / rev

Flow (GPM)	PRESSURE (PSID) 500	1000	1500
.5	3692 **2**	7712 **1**	11750 **1**
1	3788 **3**	7858 **3**	11895 **3**
2	3900 **7**	8045 **7**	12058 **6**
3	3905 **11**	8078 **11**	12135 **10**
4	3939 **15**	8155 **14**	12210 **13**
5	3923 **19**	8173 **18**	12238 **17**
7	3860 **27**	8160 **26**	12262 **24**
9	3733 **35**	8074 **34**	12224 **31**
12	3475 **47**	7848 **45**	12062 **42**
15	3149 **58**	7545 **57**	11823 **53**
20	2437 **78**	6843 **76**	11227 **72**
25	2969 **98**	5990 **96**	10360 **92**
30	603 **118**	4919 **117**	9170 **113**

TORQUE (LB IN) 9170
SPEED (RPM) 113

☒ Cont. ☐ Int.

Intermittent operation rating applies to 10% of every minute.

Fonctionnement interm. 10% max. de chaque minute d`utilisation.

Performance data based on testing using 10W40 oil with a viscosity of 200 SUS at 54° C (130° F.). Performance data is typical. Actual data may vary slightly from one production motor to another.

Les donnees sur les performances sont basees sur des tests utilisant de l'huile 10W40 d'une viscosite de 200 SUS a 54°C (130°F). Ces donnees correspondent a des situations typiques. Les donnees reelles peuvent varier legerement d'un moteur de production a l'autre.

Intermittierende Werte maximal 10% von jeder Betriebsminute.

Capacidad de funcionamiento intermitente valida para 10% por cada minuto.

Leistungsdaten sind gemessen mit SAE 10W40 bei einer Viskositaet von 43,1 Cst bei 54°C. Geringfuegige Abweichungen von den Katalogdaten sind moeglich.

Datos tecnicos obtenidos con aceite 10W40 de 200 SUS de viscosidad a 54°C (130°F). Los datos proporcionados son valores tipcos. Los valores exactos reales podrian tener una pequena variacion entre distintos motores.

⚠ **WARNING**
This product can expose you to chemicals including lead and DEHP, which are known to the State of California to cause cancer, and birth defects or other reproductive harm. For more information go to www.p65warnings.ca.gov

Tel: +45 63 12 83 00 | Email: ps@hymatik.com | www.hymatik.com | Hvidkaervej 27a, DK-5250 Odense SV, Denmark

Flange Mount / Standardgehäuse
Monture à bride(s) / Montaje de brida

Side Load - N (lbs)

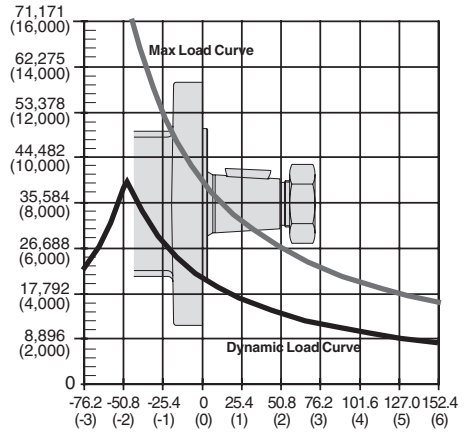

Distance from Mounting Face - mm (in)
Motor Image Not To Scale

The dynamic side load curve is based on uni-directional steady state loads for L_{10} bearing life at 3 x 10^6 revolutions.
Die zulässige auslegbare radiale Wellenbelastungskurve ist unter ruhenden, einseitig statisch gerichteten Lastverhältnissen auf eine L_{10} Lebensdauer mit 3 x 10^6 Umdrehungen kalkuliert.
La courbe de charge latérale permise se base sur des charges unidirectionnelles en régime permanent pour le roulement L_{10} à 3 x 10^6 révolutions.
La curva de valores admisibles de carga lateral está basada en cargas constantes para cojinetes L_{10} a 3 x 10^6 revoluciones.

Wheel Mount / Radnabengehäuse
Monture à roue/ Montaje de rueda

Side Load - N (lbs)

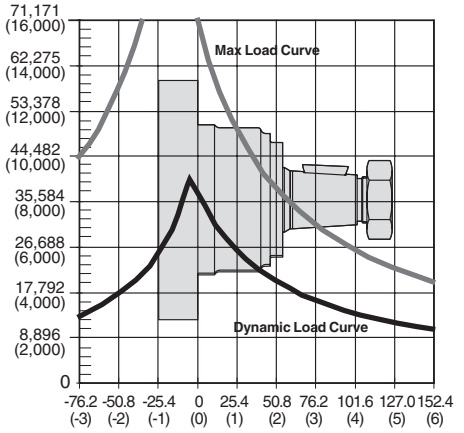

Distance from Mounting Face - mm (in)
Motor Image Not To Scale

The maximum load curve is defined by bearing static load capacity. This curve should not be exceeded at any time including shock loads.
Die maximale radiale Wellenbelastungskurve ist definiert als maximale statische Last ohne Drehzahl. Sie gilt als Grenze und sollte keinesfalls überschritten werden.
La courbe de charge maximale est définie par la capacité de charge statique portante. Cette courbe ne devrait être dépassée en aucun moment y compris pour les charges par à-coups.
La curva de carga máxima queda definida por la capacidad de carga estática del cojinete. No se deben superar los valores de esta curva, ni siquiera con cargas provisorias de impacto.

Equation to Calculate the Expected Radial Bearing Life
Gleichung zur Ermittlung der Lagerlebensdauer

Equation to calculate the dynamic bearing life for a given load:
Bestimmung der erlaubten radialen Wellenbelastung mit vorgegebener Last

Use F_a, F_b and S in equation to determine hours of L_{10} bearing life.
Die Lebensdauer in Stunden ergibt sich durch einsetzen von F_a, F_b, und S in die nachstehende Formel.

$$L = \frac{3 \times 10^6}{60 \times S} \left\{ \frac{F_a}{F_b} \right\}^{3.33}$$

Where / Mit:

S = Shaft Speed RPM / Abtriebswellendrehzahl in min^{-1}
L = Life In Hours / Lebensdauer in Stunden
F_a = Dynamic side load defined by above curve at a distance from mounting flange. / Erlaubte radiale Wellenbelastung als Function der Laenge
F_b = Application side load. / Anwendungsseitige Wellenbelastung

Note: Calculations are based on L_{10} bearing life per ISO 281.
Auslegung basiert auf einer L_{10} Lenbendauer nach ISO 281.

WARNING
This product can expose you to chemicals including lead and DEHP, which are known to the State of California to cause cancer, and birth defects or other reproductive harm. For more information go to www.p65warnings.ca.gov

Tel: +45 63 12 83 00 | Email: ps@hymatik.com | www.hymatik.com | Hvidkaervej 27a, DK-5250 Odense SV, Denmark

Code: AM

SAE A 2-Bolt, 5/16-18 UNC Manifold

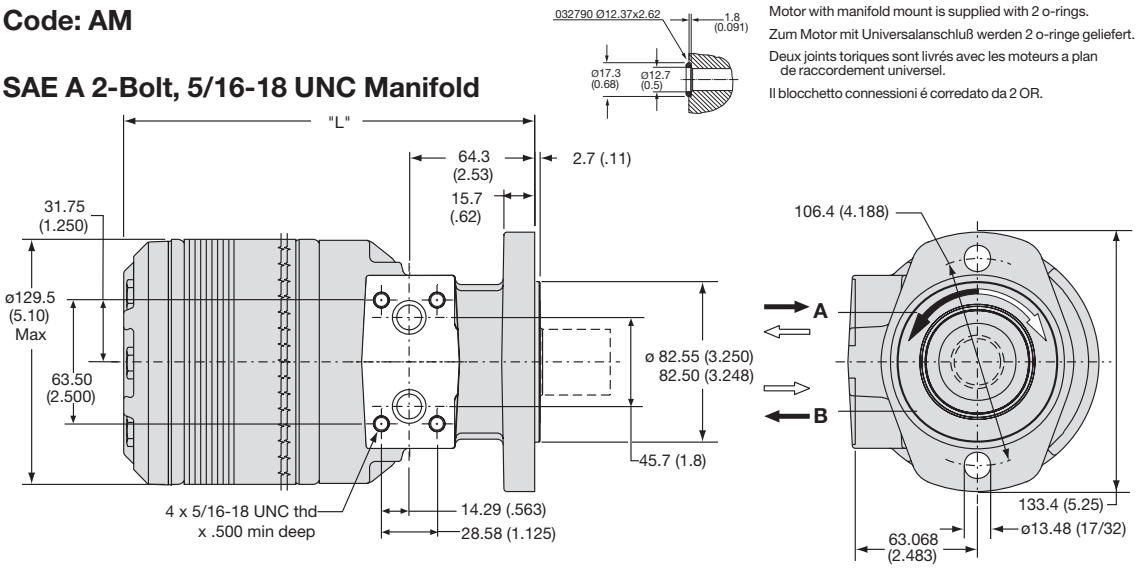

Code AM	disp.	0140	0170	0195	0240	0280	0310	0335	0405	0475	0530	0625	0785	0960
Weight/Gewicht	**kg**	**14.2**	**14.5**	**14.7**	**15.1**	**15.5**	**15.7**	**15.9**	**16.5**	**17.2**	**17.9**	**18.6**	**20.2**	**21.9**
Poids/Peso	(lb)	(31.4)	(32.0)	(32.5)	(33.3)	(34.2)	(34.7)	(35.1)	(36.4)	(37.9)	(39.5)	(41.1)	(44.5)	(48.3)
Length	**"L" mm**	**195.6**	**198.6**	**201.4**	**206.5**	**211.3**	**214.8**	**217.7**	**225.0**	**233.7**	**240.0**	**249.4**	**268.4**	**287.5**
	"L" (in)	(7.70)	(7.82)	(7.95)	(8.13)	(8.32)	(8.46)	(8.57)	(8.86)	(9.20)	(9.45)	(9.82)	(10.57)	(11.32)

Code: AS

SAE A 2-Bolt, 7/8-14 SAE

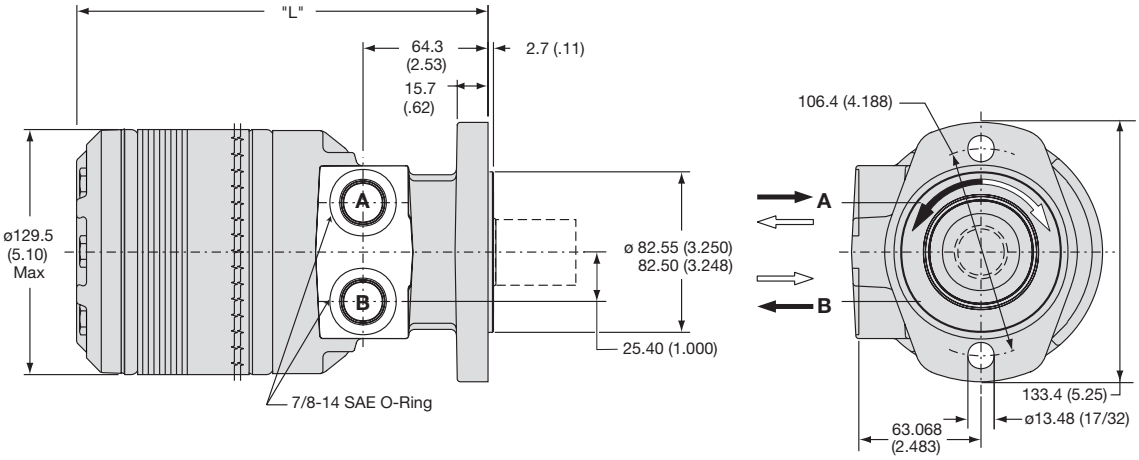

Code AS	disp.	0140	0170	0195	0240	0280	0310	0335	0405	0475	0530	0625	0785	0960
Weight/Gewicht	**kg**	**14.2**	**14.5**	**14.7**	**15.1**	**15.5**	**15.7**	**15.9**	**16.5**	**17.2**	**17.9**	**18.6**	**20.2**	**21.9**
Poids/Peso	(lb)	(31.4)	(32.0)	(32.5)	(33.3)	(34.2)	(34.7)	(35.1)	(36.4)	(37.9)	(39.5)	(41.1)	(44.5)	(48.3)
Length	**"L" mm**	**195.6**	**198.6**	**201.4**	**206.5**	**211.3**	**214.8**	**217.7**	**225.0**	**233.7**	**240.0**	**249.4**	**268.4**	**287.5**
	"L" (in)	(7.70)	(7.82)	(7.95)	(8.13)	(8.32)	(8.46)	(8.57)	(8.86)	(9.20)	(9.45)	(9.82)	(10.57)	(11.32)

English equivalents for metric specifications are shown in ( ).

WARNING
This product can expose you to chemicals including lead and DEHP, which are known to the State of California to cause cancer, and birth defects or other reproductive harm. For more information go to www.p65warnings.ca.gov

Tel: +45 63 12 83 00 | Email: ps@hymatik.com | www.hymatik.com | Hvidkaervej 27a, DK-5250 Odense SV, Denmark

Code: LS

Wheel, Front Brake Nose, 7/8-14 SAE

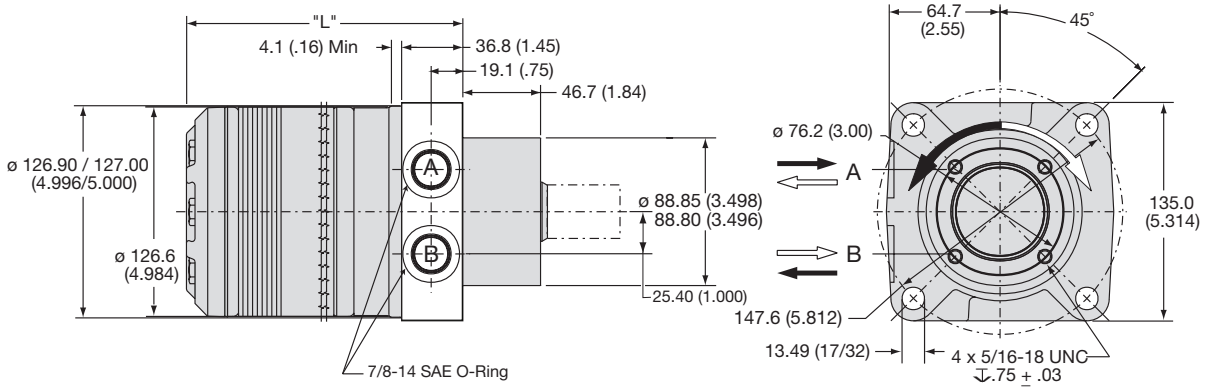

Code LS	disp.	0140	0170	0195	0240	0280	0310	0335	0405	0475	0530	0625	0785	0960
Weight/Gewicht	**kg**	**14.6**	**14.8**	**15.1**	**15.5**	**15.9**	**16.1**	**16.3**	**16.9**	**17.5**	**18.3**	**19.0**	**20.5**	**22.2**
Poids/Peso	(lb)	(32.2)	(37.7)	(33.3)	(34.1)	(35.0)	(35.5)	(35.8)	(37.2)	(38.6)	(40.3)	(41.8)	(45.3)	(49.0)
Length	**"L" mm**	**150.3**	**153.4**	**156.7**	**161.3**	**168.1**	**169.7**	**172.5**	**179.8**	**188.5**	**194.8**	**204.2**	**233.3**	**242.3**
	"L" (in)	(5.92)	(6.04)	(6.17)	(6.35)	(6.54)	(6.68)	(6.79)	(7.08)	(7.42)	(7.67)	(8.04)	(8.79)	(9.54)

Code: MS

Magneto, 7/8-14 SAE

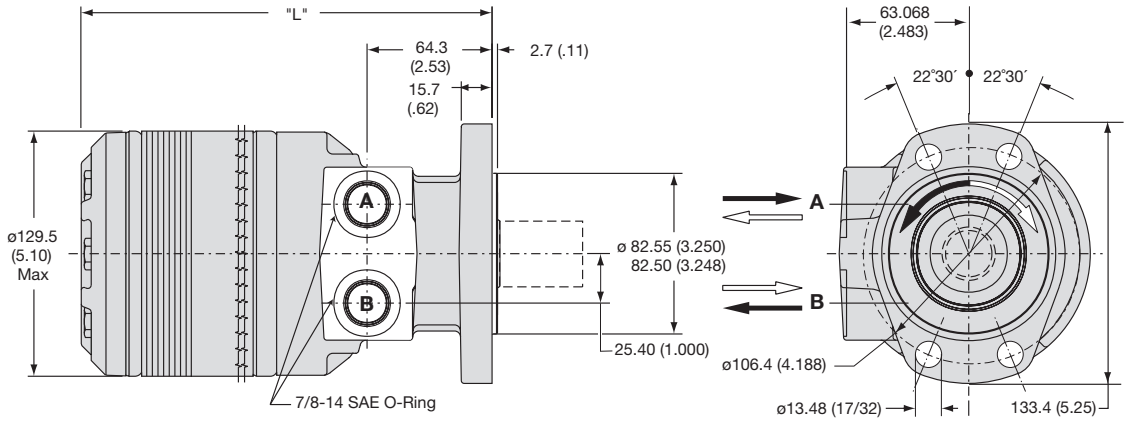

Code MS	disp.	0140	0170	0195	0240	0280	0310	0335	0405	0475	0530	0625	0785	0960
Weight/Gewicht	**kg**	**14.2**	**14.5**	**14.7**	**15.1**	**15.5**	**16.1**	**15.9**	**16.5**	**17.2**	**17.9**	**18.6**	**20.2**	**21.9**
Poids/Peso	(lb)	(31.4)	(32.0)	(32.5)	(33.3)	(34.2)	(35.5)	(35.1)	(36.4)	(37.9)	(39.5)	(41.1)	(44.5)	(48.3)
Length	**"L" mm**	**195.6**	**198.6**	**201.4**	**206.5**	**211.3**	**214.8**	**217.7**	**225.0**	**233.7**	**240.0**	**249.4**	**268.4**	**287.5**
	"L" (in)	(7.70)	(7.82)	(7.95)	(8.13)	(8.32)	(8.46)	(8.57)	(8.86)	(9.20)	(9.45)	(9.82)	(10.57)	(11.32)

English equivalents for metric specifications are shown in ( ).

WARNING
This product can expose you to chemicals including lead and DEHP, which are known to the State of California to cause cancer, and birth defects or other reproductive harm. For more information go to www.p65warnings.ca.gov

Tel: +45 63 12 83 00 | Email: ps@hymatik.com | www.hymatik.com | Hvidkaervej 27a, DK-5250 Odense SV, Denmark

Code: BS

SAE B 2-Bolt, 7/8-14 SAE O-Ring

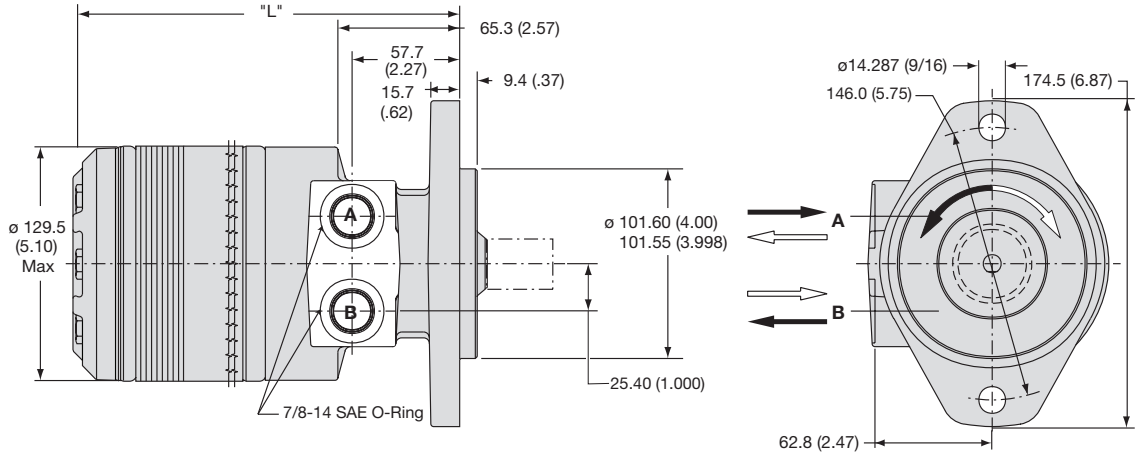

Code BS	disp.	0140	0170	0195	0240	0280	0310	0335	0405	0475	0530	0625	0785	0960
Weight/Gewicht	**kg**	**14.9**	**15.2**	**15.3**	**15.7**	**16.1**	**16.4**	**16.6**	**17.1**	**17.8**	**18.6**	**19.3**	**20.8**	**22.5**
Poids/Peso	(lb)	(32.8)	(33.4)	(33.9)	(34.7)	(35.6)	(36.1)	(36.5)	(37.8)	(39.3)	(40.9)	(42.5)	(45.9)	(49.7)
Length	"L" mm	**195.6**	**198.6**	**201.4**	**206.5**	**211.3**	**214.8**	**217.7**	**225.0**	**233.7**	**240.0**	**249.4**	**268.4**	**287.5**
	"L" (in)	(7.70)	(7.82)	(7.95)	(8.13)	(8.32)	(8.46)	(8.57)	(8.86)	(9.20)	(9.45)	(9.82)	(10.57)	(11.32)

Code: US

Wheel, Standard, 7/8-14 SAE

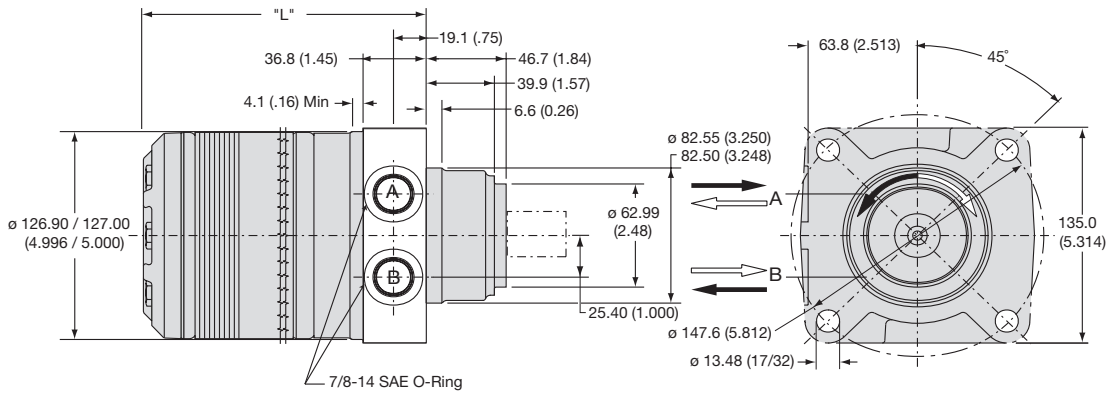

Code US	disp.	0140	0170	0195	0240	0280	0310	0335	0405	0475	0530	0625	0785	0960
Weight/Gewicht	**kg**	**14.6**	**14.8**	**15.1**	**15.5**	**15.9**	**16.1**	**16.3**	**16.9**	**17.51**	**18.3**	**19.0**	**20.5**	**22.2**
Poids/Peso	(lb)	(32.2)	(32.7)	(33.3)	(34.1)	(35.0)	(35.5)	(35.8)	(37.2)	(38.6)	(40.3)	(41.8)	(45.3)	(49.0)
Length	**"L" mm**	**150.3**	**153.4**	**156.7**	**161.3**	**168.1**	**169.7**	**172.5**	**179.8**	**188.5**	**194.8**	**204.2**	**233.3**	**242.3**
	"L" (in)	(5.92)	(6.04)	(6.17)	(6.35)	(6.54)	(6.68)	(6.79)	(7.08)	(7.42)	(7.67)	(8.04)	(8.79)	(9.54)

English equivalents for metric specifications are shown in ( ).

WARNING
This product can expose you to chemicals including lead and DEHP, which are known to the State of California to cause cancer, and birth defects or other reproductive harm. For more information go to www.p65warnings.ca.gov

Tel: +45 63 12 83 00 | Email: ps@hymatik.com | www.hymatik.com | Hvidkaervej 27a, DK-5250 Odense SV, Denmark

Code: WE

Wheel, Optional, Manifold Rear Port

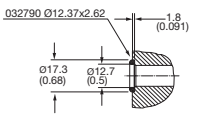

Motor with manifold mount is supplied with 2 o-rings.
Zum Motor mit Universalanschluß werden 2 o-ringe geliefert.
Deux joints toriques sont livrés avec les moteurs a plan de raccordement universel.
Il blocchetto connessioni é corredato da 2 OR.

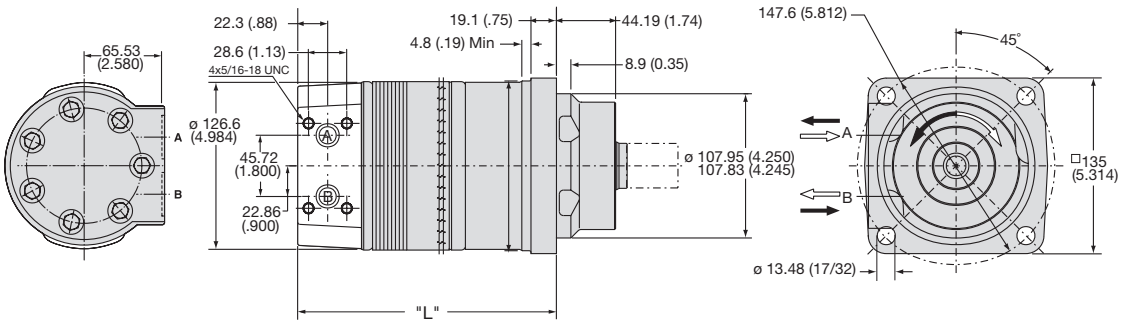

Code WE	disp.	0140	0170	0195	0240	0280	0310	0335	0405	0475	0530	0625	0785	0960
Weight/Gewicht	**kg**	**17.6**	**17.8**	**18.1**	**18.4**	**18.8**	**19.1**	**19.3**	**19.8**	**20.5**	**21.3**	**22.0**	**23.5**	**25.2**
Poids/Peso	(lb)	(38.7)	(39.3)	(39.8)	(40.6)	(41.5)	(42.0)	(42.4)	(43.7)	(45.2)	(46.8)	(48.4)	(51.8)	(55.6)
Length	**"L" mm**	**177.5**	**180.6**	**183.9**	**188.7**	**193.3**	**196.9**	**199.6**	**207.0**	**215.6**	**222.0**	**231.6**	**250.7**	**269.7**
	"L" (in)	(6.99)	(7.11)	(7.24)	(7.43)	(7.61)	(7.75)	(7.86)	(8.15)	(8.49)	(8.74)	(9.12)	(9.87)	(10.62)

Code: VB

SAE A 4-Bolt, 7/8-14 SAE Rear Port

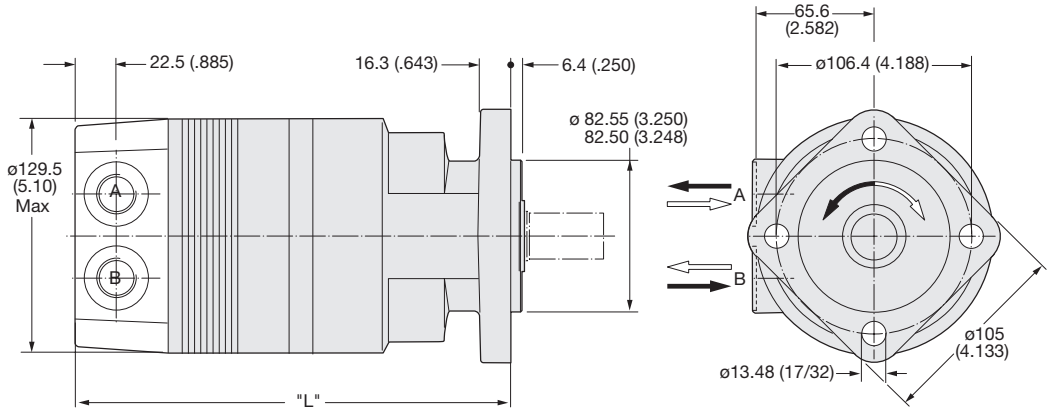

Code VB	disp.	0140	0170	0195	0240	0280	0310	0335	0405	0475	0530	0625	0785	0960
Weight/Gewicht	**kg**	**16.1**	**16.3**	**16.6**	**17.0**	**17.4**	**17.6**	**17.8**	**18.4**	**19.0**	**19.8**	**20.5**	**22.0**	**23.7**
Poids/Peso	(lb)	(35.5)	(35.9)	(36.6)	(37.5)	(38.4)	(38.8)	(39.2)	(41.0)	(41.9)	(43.7)	(45.2)	(48.5)	(52.2)
Length	**"L" mm**	**216.7**	**219.7**	**223.0**	**227.8**	**232.4**	**236.0**	**238.8**	**246.1**	**254.8**	**261.1**	**270.8**	**289.8**	**308.9**
	"L" (in)	(8.53)	(8.65)	(8.78)	(8.97)	(9.15)	(9.29)	(9.40)	(9.69)	(10.03)	(10.28)	(10.66)	(11.41)	(12.16)

English equivalents for metric specifications are shown in ( ).

WARNING
This product can expose you to chemicals including lead and DEHP, which are known to the State of California to cause cancer, and birth defects or other reproductive harm. For more information go to www.p65warnings.ca.gov

Tel: +45 63 12 83 00 | Email: ps@hymatik.com | www.hymatik.com | Hvidkaervej 27a, DK-5250 Odense SV, Denmark

Code: DB

Large Wheel Mount, 7/8-14 SAE Rear Port

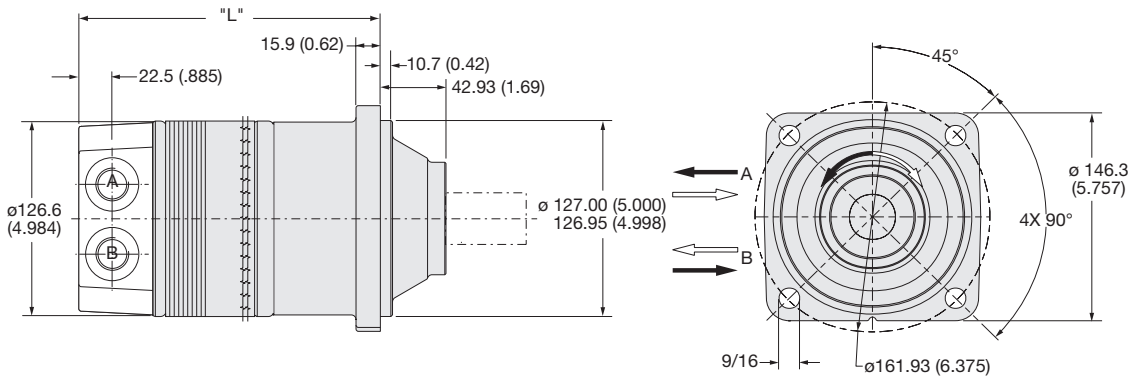

Code DB	disp.	0140	0170	0195	0240	0280	0310	0335	0405	0475	0530	0625	0785	0960
Weight/Gewicht	**kg**	**17.6**	**17.8**	**18.1**	**18.4**	**18.8**	**19.1**	**19.3**	**19.8**	**20.5**	**21.3**	**22.0**	**23.5**	**25.2**
Poids/Peso	(lb)	(38.7)	(39.3)	(39.8)	(40.6)	(41.5)	(42.0)	(42.4)	(43.7)	(45.2)	(46.8)	(48.4)	(51.8)	(55.6)
Length	**"L" mm**	**178.8**	**182.1**	**185.2**	**190.0**	**194.8**	**198.4**	**201.2**	**208.5**	**216.9**	**223.3**	**232.9**	**252.0**	**271.0**
	"L" (in)	(7.04)	(7.17)	(7.29)	(7.48)	(7.67)	(7.81)	(7.92)	(8.21)	(8.54)	(8.79)	(9.17)	(9.92)	(10.67)

Code: ES

Modified SAE A 6-Bolt, 7/8-14 SAE O-Ring

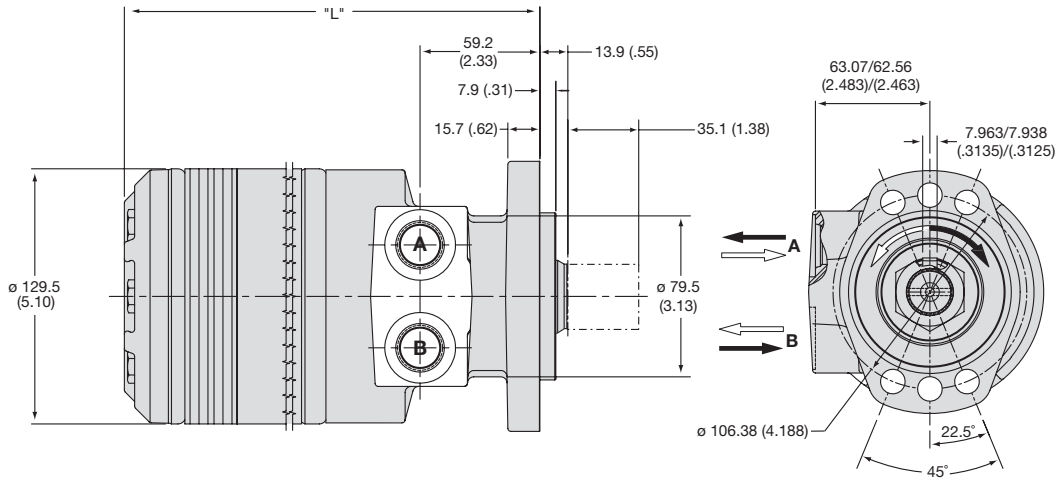

Code ES	disp.	0140	0170	0195	0240	0280	0310	0335	0360	0405	0475	0530	0625	0785	0960
Weight/Gewicht	**kg**	**14.2**	**14.5**	**14.7**	**15.1**	**15.5**	**16.1**	**16.3**	**16.4**	**16.5**	**17.2**	**17.9**	**18.6**	**20.2**	**21.9**
Poids/Peso	(lb)	(31.4)	(32.0)	(33.3)	(33.3)	(34.2)	(35.5)	(35.9)	(36.2)	(36.4)	(37.9)	(39.5)	(41.1)	(44.5)	(48.3)
Length	**"L" mm**	**189.5**	**192.5**	**195.8**	**200.4**	**205.2**	**208.5**	**211.6**	**214.9**	**218.9**	**227.6**	**233.9**	**243.3**	**262.4**	**281.4**
	"L" (in)	(7.46)	(7.58)	(7.71)	(7.89)	(8.08)	(8.21)	(8.33)	(8.46)	(8.62)	(8.96)	(9.21)	(9.58)	(10.33)	(11.08)

English equivalents for metric specifications are shown in ( ).

WARNING
This product can expose you to chemicals including lead and DEHP, which are known to the State of California to cause cancer, and birth defects or other reproductive harm. For more information go to www.p65warnings.ca.gov

Tel: +45 63 12 83 00 | Email: ps@hymatik.com | www.hymatik.com | Hvidkaervej 27a, DK-5250 Odense SV, Denmark

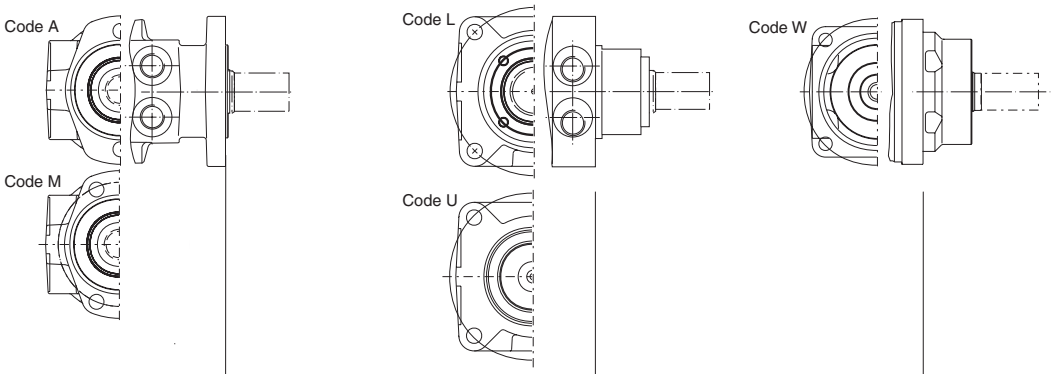

Code: 01

1" 6B Spline

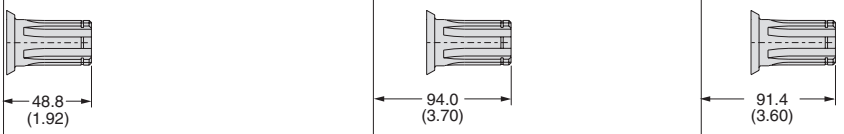

Code: 03

1 1/4" Keyed

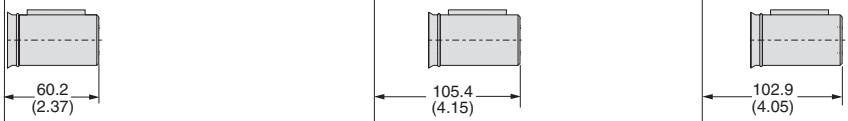

Code: 05

1" 1/4 14 Tooth Spline

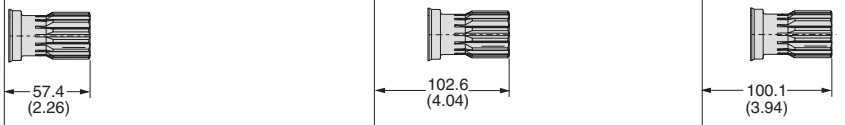

Code: 06

19 Tooth Spline

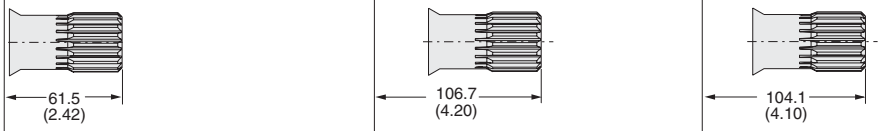

Code: 46

32 mm Keyed

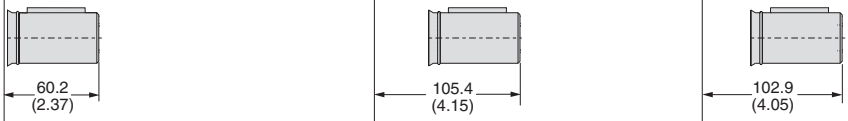

Code: 62

1" 1/4 14 Tooth Spline SAE

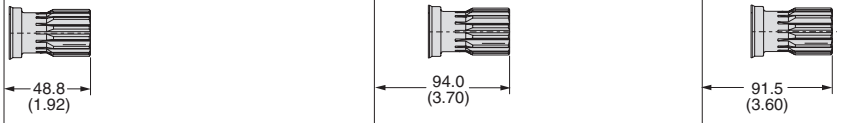

English equivalents for metric specifications are shown in ( ).

WARNING
This product can expose you to chemicals including lead and DEHP, which are known to the State of California to cause cancer, and birth defects or other reproductive harm. For more information go to www.p65warnings.ca.gov

Code: 01

1" 6B Spline

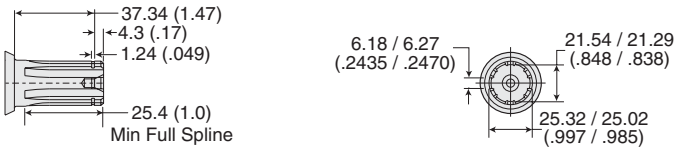

Code: 03

1 1/4" Keyed

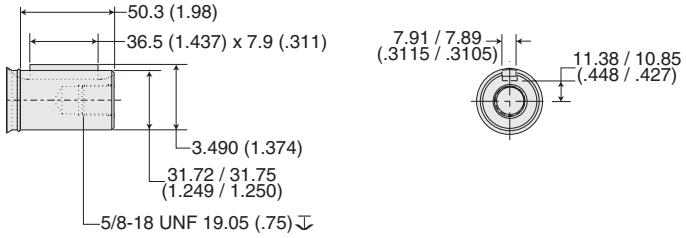

Code: 05

1" 1/4 14 Tooth Spline

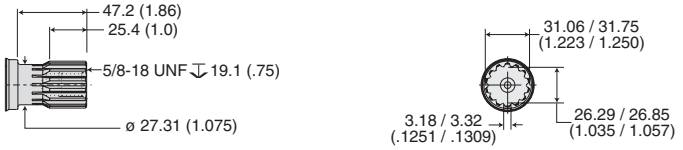

Code: 06

19 Tooth Spline

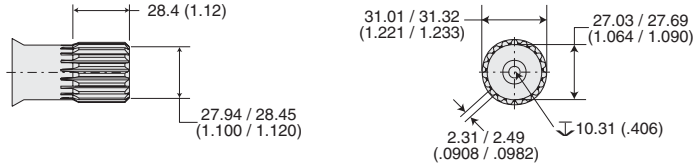

Code: 46

32 mm Keyed

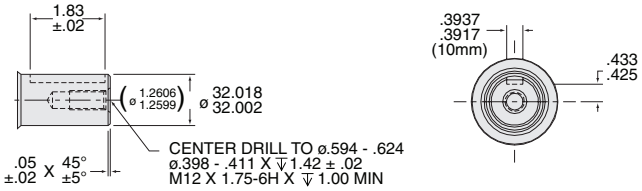

Code: 62

1" 1/4 14 Tooth Spline SAE

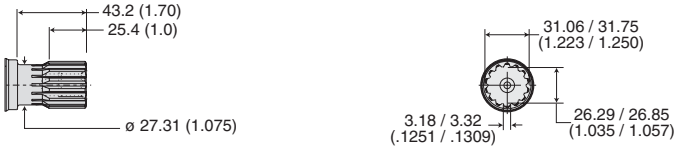

English equivalents for metric specifications are shown in ( ).

WARNING
This product can expose you to chemicals including lead and DEHP, which are known to the State of California to cause cancer, and birth defects or other reproductive harm. For more information go to www.p65warnings.ca.gov

Tel: +45 63 12 83 00 | Email: ps@hymatik.com | www.hymatik.com | Hvidkaervej 27a, DK-5250 Odense SV, Denmark

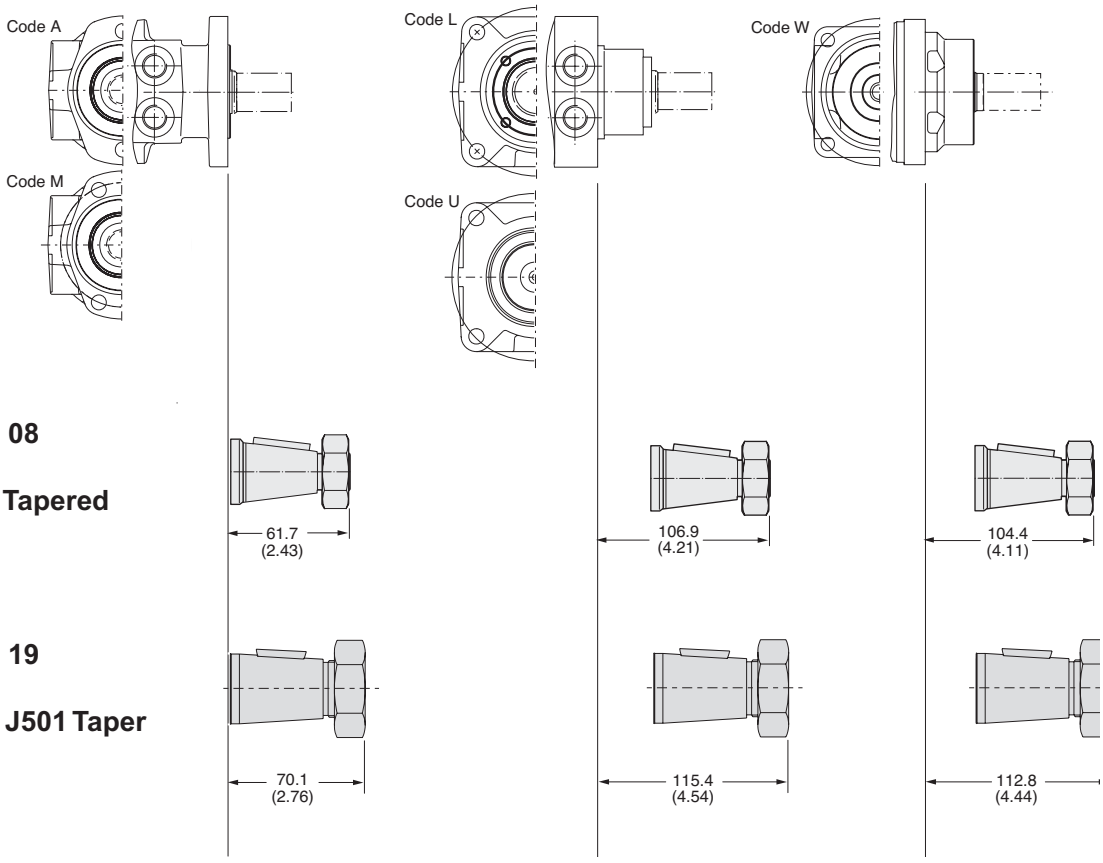

Code: 08

1 1/4" Tapered

Code: 19

1 3/8" J501 Taper

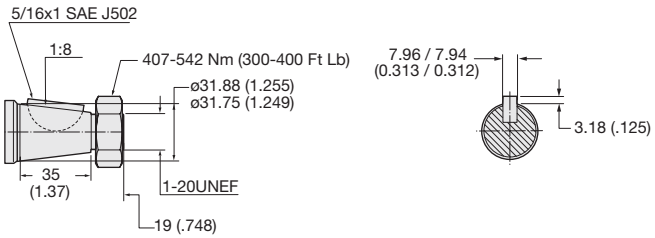

Code: 08

1 1/4" Tapered

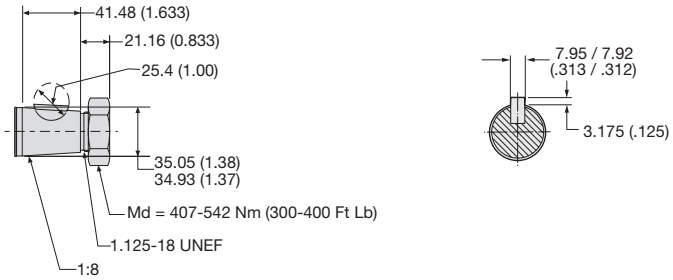

Code: 19

1 3/8" J501 Taper

English equivalents for metric specifications are shown in ( ).

WARNING
This product can expose you to chemicals including lead and DEHP, which are known to the State of California to cause cancer, and birth defects or other reproductive harm. For more information go to www.p65warnings.ca.gov

Tel: +45 63 12 83 00 | Email: ps@hymatik.com | www.hymatik.com | Hvidkaervej 27a, DK-5250 Odense SV, Denmark

13 Displacements	(8.6 to 58.5 in³/rev)
13 Schluckvolumen	**140 . . . 959 cm³/rev**
13 Cylindrée	
13 Despazamientos	

	Cont.	**Int.**
Maximum Pressure	(3000 psid)	(4000 psid)
Eingangsdruck	**. . . 207 bar**	**. . . 276 bar**
Pression entrée		
Presion Maxima		

Maximum Oil Flow	(30 gpm)
Schluckstrom	**. . . 114 lpm**
Débit d'huile	
Caudal Maximo de Aceite	

Maximum Speed	(660 rpm)
Drehzahl	**660 rpm**
Vitesse de rotation	
Velocidad Maxima	

	Cont.	**Int.**
Maximum Torque	(9,239 lb in)	(12,636 lb in)
MaxDrehmoment	**1044 Nm**	**1428 Nm**
Couple		
Torque Maximo		

Maximum Side Load at Key	(3597 lb)
Seitenlast	**. . . 16000 N**
Charges latèrales	
Carga Maxima Lateral	

! CAUTION!
See installation/operating instructions for product cautions and proper use.

Exceptional Strength and Durability in a High Performance Motor/Brake Package

This brake motor consists of a BG Series motor integrated into a wet disc, spring applied, hydraulically released brake. Standard holding capacity is 12,000 lb in of holding torque. The brake is front mounted for reliable operation even in the event of a system failure. The brake release port is capable of pressures to 3000 PSI.

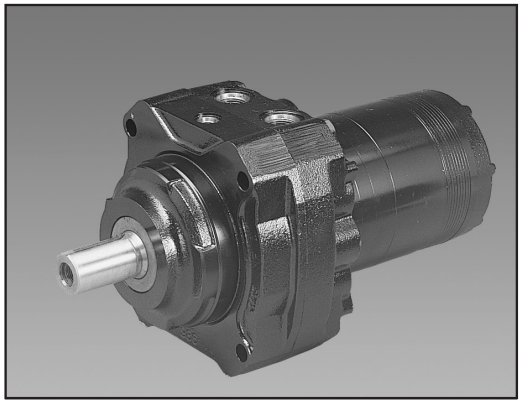

Rated Brake Holding Capacity @ Zero Release Pressure Nm (in-lbs)	Minimum Full Release Pressure bar (PSI)
1350 (12,000)	22 (315)

12,000 in-lbs is standard holding capacity.
For other holding capacities, see page 287.

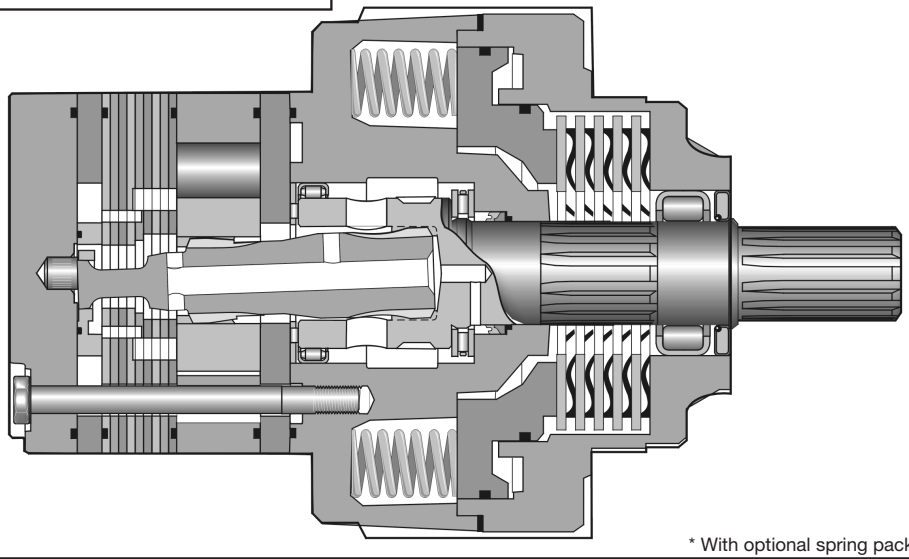

* With optional spring package.

WARNING
This product can expose you to chemicals including lead and DEHP, which are known to the State of California to cause cancer, and birth defects or other reproductive harm. For more information go to www.p65warnings.ca.gov

Parker Hannifin Corporation
Pump & Motor Division
Greeneville, Tennessee, USA

Tel: +45 63 12 83 00 | Email: ps@hymatik.com | www.hymatik.com | Hvidkaervej 27a, DK-5250 Odense SV, Denmark

Ordering Information / Bestellschlüssel
System de Commande / Imformacion para pedidos

LSHT Torqmotors™ and Nichols™ Motors
BG Series Brake Motor HY13-1590-011/US,EU

BG — Series

XXXX — Displacement / Schluckvolumen / Cylindrée / Desplazamiento

Code	cm³/tr cm³/giro cm³/U	in³/rev
0140	141	8.6
0170	169	10.3
0195	195	11.9
0240	238	14.5
0280	280	17.1
0310	310	18.9
0335	337	20.6
0360	360	22.2
0405	405	24.7
0475	477	29.1
0530	528	32.3
0625	623	38.0
0785	786	48.0
0960	959	58.5

XX — Mounting/Ports / Gehäuse/Anschluß / Carter/Plan de raccordement / Montaje/Lumbreras

Code	Mounting/Ports
AS	Front Mtg/Front Bolting, 1/2-13 UNC Thd 7/8-14 SAE 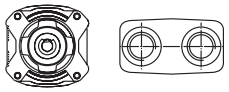
CS	Rear Mtg/Thru Bolting, 7/8-14 SAE 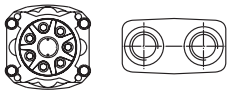
Custom Order BM	SAE "B" 2 Bolt, 5/16-18 UNC Manifold 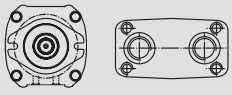
Custom Order BS	SAE "B" 2 Bolt, 7/8-14 SAE 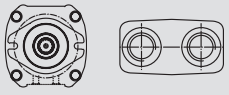

XX — Shaft / Welle / Arbre / Eje

Code	Shaft
03	1 1/4" Keyed 
05	1 1/4" 14 Tooth Spline 
08	1 1/4" Tapered* 
Custom Order 19	1 3/8" J501 Tapered* 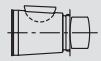

For performance data curves, see TG section.

Shaded areas indicate custom order components. Standard pricing and delivery terms may not apply to these components. Please refer to the price list for details, or consult your Parker Pump Motor division Sales Resource.

⚠ **WARNING**
This product can expose you to chemicals including lead and DEHP, which are known to the State of California to cause cancer, and birth defects or other reproductive harm. For more information go to www.p65warnings.ca.gov

Tel: +45 63 12 83 00 | Email: ps@hymatik.com | www.hymatik.com | Hvidkaervej 27a, DK-5250 Odense SV, Denmark

0

Rotation
Drehrichtung
Direction de rotation
Rotacion

Code	Front Port Rotation
0	Standard 
1	Reverse Timed Manifold 

XXXX

Options
Opciones

Code	Options
AAAA	"Standard", Black Paint (045134), Paint area all over except front and rear pilot and mounting flanges and shaft
AAAB	"Standard", No Paint
AAAC	"Standard", Double Paint (045247), Paint area all over except front and rear pilot and mounting flanges and shaft
AABJ	Free Running Rotor Set, Black paint (045134), Paint area all over except front and rear pilot and mounting flanges and shaft
AABT	Black paint (045134), Paint area all over except front and rear pilot and mounting flanges and shaft, No shaft hardware
AAFA	Fluorocarbon (Viton) Seals, High Temp Commutator Seal, No paint
AAFW	Fluorocarbon (Viton) Seals, High Temp Commutator Seal, Black paint (045134), Paint area all over except front and rear pilot and mounting flanges and shaft
AAJH	Fluorocarbon (Viton) Seals, High Temp Commutator Seal, Black paint (045134), Paint area all over except front and rear pilot and mounting flanges and shaft, No shaft hardware
AAJL	No paint, No shaft hardware
AAUP	Fluorocarbon (Viton) Seals, High Temp Commutator Seal, No Paint, No shaft Hardware
AAVE	Free Running Rotor Set, Fluorocarbon (Viton) Seals, High Temp Commutator Seal, Black Paint (045134), Paint area all over except front and rear pilot and mounting flanges and shaft
ABCW	Fluorocarbon (Viton) Seals, High Temperature Commutator Seal, Bidirectional shuttle (.062 Orifice) (11:00*), Black Paint (045134), Paint area all over except front and rear pilot and mounting flanges and shaft, No Shaft Hardware
ABCZ	Fluorocarbon (Viton) Seals, Double paint (045247), Paint area all over except front and rear pilot and mounting flanges and shaft
BBGV	Fluorocarbon (Viton) Seals, High Temperature Commutator Seal, 1015 PSI Int Bidirectional Relief, Black Paint (045134), Paint area all over except front and rear pilot and mounting flanges and shaft, No Shaft Hardware
BBGW	Fluorocarbon (Viton) Seals, High Temperature Commutator Seal, 1450 PSI Int Bidirectional Relief, Black Paint (045134), Paint area all over except front and rear pilot and mounting flanges and shaft, No Shaft Hardware
BBGX	No Shaft Hardware, Fluorocarbon (Viton) Seals, High Temperature Commutator Seal, 2031 PSI Int Bidirectional Relief, Black Paint (045134), Paint area all over except front and rear pilot and mounting flanges and shaft, No Shaft Hardware
BBGY	Fluorocarbon (Viton) Seals, High Temperature Commutator Seal, 3046 PSI Int Bidirectional Relief, Black Paint (045134), Paint area all over except front and rear pilot and mounting flanges and shaft, No Shaft Hardware
BBGZ	Fluorocarbon (Viton) Seals, High Temperature Commutator Seal, 4061 PSI Int Bidirectional Relief, Black Paint (045134), Paint area all over except front and rear pilot and mounting flanges and shaft, No Shaft Hardware
BBHC	Fluorocarbon (Viton) Seals, High Temperature Commutator Seal, 725 PSI Int Bidirectional Relief, Black Paint (045134), Paint area all over except front and rear pilot and mounting flanges and shaft, No Shaft Hardware
BBHD	Fluorocarbon (Viton) Seals, High Temperature Commutator Seal, 2538 PSI Int Bidirectional Relief, Black Paint (045134), Paint area all over except front and rear pilot and mounting flanges and shaft, No Shaft Hardware

***Note:**

A-A

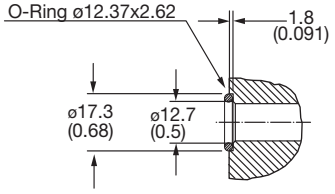

Motor with manifold mount is supplied with 2 o-rings.

Zum Motor mit Universalanschluß werden 2 o-ringe geliefert.

Deux joints toriques sont livrés avec les moteurs a plan de raccordement universel.

El motor con montaje de distribuidor se suministra con 2 sellos toroidales.

Shaded areas indicate custom order components. Standard pricing and delivery terms may not apply to these components. Please refer to the price list for details, or consult your Parker Pump Motor division Sales Resource.

WARNING
This product can expose you to chemicals including lead and DEHP, which are known to the State of California to cause cancer, and birth defects or other reproductive harm. For more information go to www.p65warnings.ca.gov

Tel: +45 63 12 83 00 | Email: ps@hymatik.com | www.hymatik.com | Hvidkaervej 27a, DK-5250 Odense SV, Denmark

Wheel Mount/Radnabengehause
Monture à roue/ Montaje de rueda

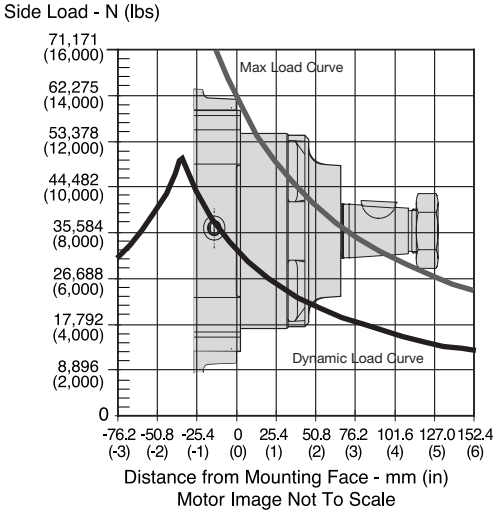

The dynamic side load curve is based on uni-directional steady state loads for L_{10} bearing life at 3 x 10^6 revolutions.
Die zulässige auslegbare radiale Wellenbelastungskurve ist unter ruhenden, einseitig statisch gerichteten Lastverhältnissen auf eine L_{10} Lebensdauer mit 3 x 10^6 Umdrehungen kalkuliert.
La courbe de charge latérale permise se base sur des charges unidirectionnelles en régime permanent pour le roulement L_{10} à 3 x 10^6 révolutions.
La curva de valores admisibles de carga lateral está basada en cargas constantes para cojinetes L_{10} a 3 x 10^6 revoluciones.

The maximum load curve is defined by bearing static load capacity. This curve should not be exceeded at any time including shock loads.
Die maximale radiale Wellenbelastungskurve ist definiert als maximale statische Last ohne Drehzahl. Sie gilt als Grenze und sollte keinesfalls überschritten werden.
La courbe de charge maximale est définie par la capacité de charge statique portante. Cette courbe ne devrait être dépassée en aucun moment y compris pour les charges par à-coups.
La curva de carga máxima queda definida por la capacidad de carga estática del cojinete. No se deben superar los valores de esta curva, ni siquiera con cargas provisorias de impacto.

Equation to Calculate the Expected Radial Bearing Life
Gleichung zur Ermittlung der Lagerlebensdauer

Equation to calculate the dynamic bearing life for a given load:
Bestimmung der erlaubten radialen Wellenbelastung mit vorgegebener Last

Use F_a, F_b and S in equation to determine hours of L_{10} bearing life.
Die Lebensdauer in Stunden ergibt sich durch einsetzen von F_a, F_b, und S in die nachstehende Formel.

$$L = \frac{3 \times 10^6}{60 \times S} \left\{ \frac{F_a}{F_b} \right\}^{3.33}$$

Where / Mit:

S = Shaft Speed RPM / Abtriebswellendrehzahl in min^{-1}
L = Life In Hours / Lebensdauer in Stunden
F_a = Dynamic side load defined by above curve at a distance from mounting flange. / Erlaubte radiale Wellenbelastung als Function der Laenge
F_b = Application side load. / Anwendungsseitige Wellenbelastung

Note: Calculations are based on L_{10} bearing life per ISO 281.
Auslegung basiert auf einer L_{10} Lenbendauer nach ISO 281

WARNING
This product can expose you to chemicals including lead and DEHP, which are known to the State of California to cause cancer, and birth defects or other reproductive harm. For more information go to www.p65warnings.ca.gov

Tel: +45 63 12 83 00 | Email: ps@hymatik.com | www.hymatik.com | Hvidkaervej 27a, DK-5250 Odense SV, Denmark

Code: AS

Front Mounting / Front Bolting, 7/8-14 SAE O-Ring

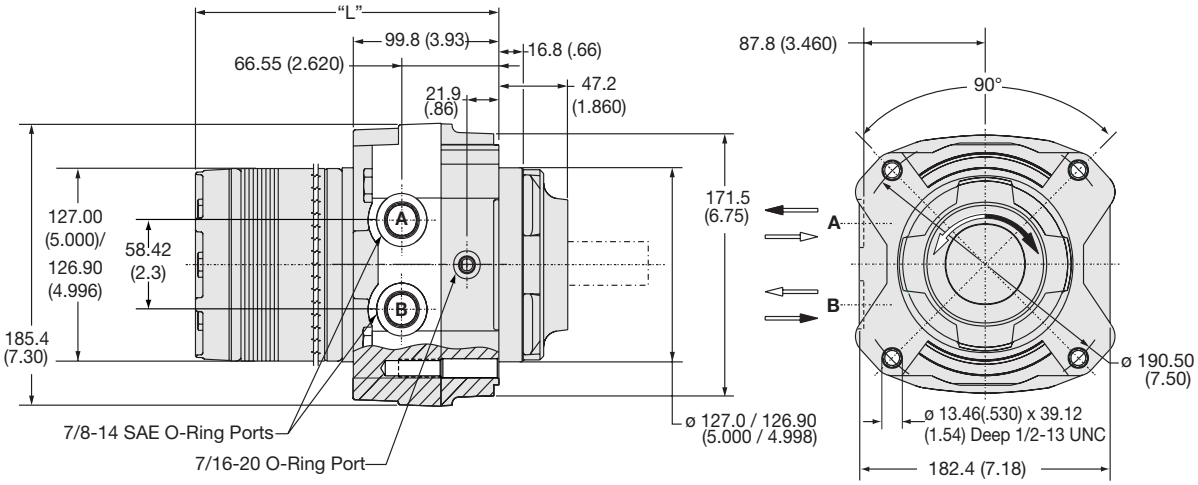

Code AS		0140	0170	0195	0240	0280	0335	0405	0475	0530	0625	0785	0960
Weight / Gewicht	**kg**	**27.3**	**27.5**	**27.8**	**28.1**	**28.5**	**28.9**	**29.5**	**30.2**	**30.9**	**31.7**	**33.2**	**34.9**
Poids/Peso	(lb)	(60.2)	(60.8)	(61.3)	(62.1)	(63.0)	(63.9)	(65.2)	(66.7)	(68.3)	(69.9)	(73.3)	(77.1)
Length	**"L" mm**	**192.3**	**195.3**	**198.6**	**203.2**	**208.0**	**214.4**	**221.7**	**230.4**	**236.7**	**246.1**	**265.2**	**284.2**
	"L" (in)	(7.57)	(7.69)	(7.82)	(8.00)	(8.19)	(8.44)	(8.73)	(9.07)	(9.32)	(9.69)	(10.44)	(11.19)

Code: BM*

SAE "B" 2 Bolt, Manifold

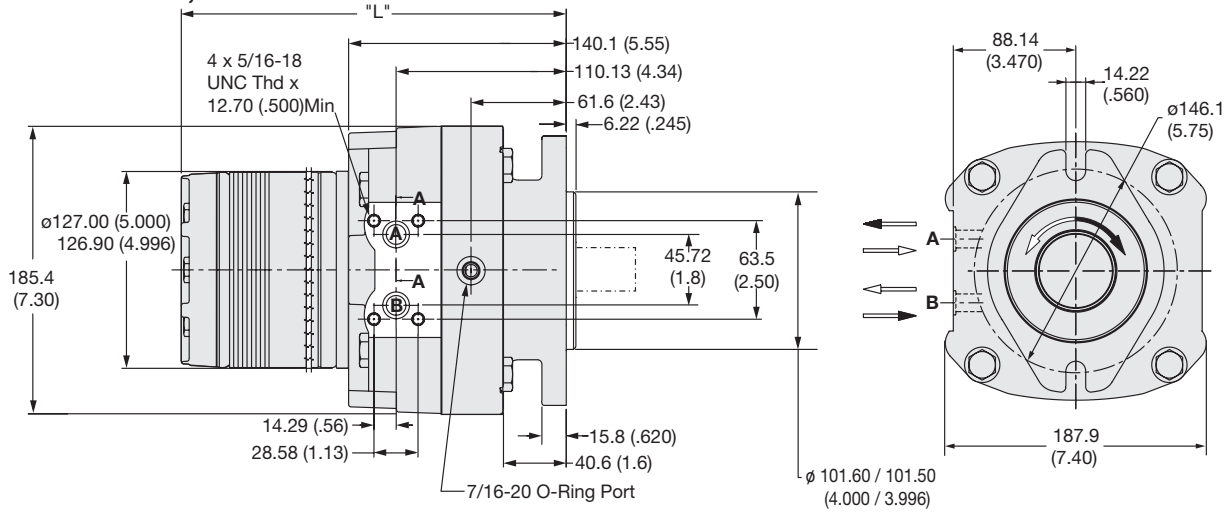

Code BM		0140	0170	0195	0240	0280	0335	0405	0475	0530	0625	0785	0960
Weight / Gewicht	**kg**	**28.4**	**28.7**	**28.9**	**29.3**	**29.7**	**30.1**	**30.1**	**30.7**	**31.3**	**32.8**	**34.3**	**36.1**
Poids/Peso	(lb)	(62.6)	(63.2)	(63.7)	(64.5)	(65.4)	(66.3)	(67.6)	(69.1)	(70.7)	(72.3)	(75.7)	(79.5)
Length	**"L" mm**	**233.2**	**236.4**	**239.6**	**244.3**	**249.1**	**255.4**	**262.8**	**271.3**	**277.7**	**287.2**	**306.3**	**325.3**
	"L" (in)	(9.18)	(9.31)	(9.43)	(9.62)	(9.81)	(10.06)	(10.35)	(10.68)	(10.93)	(11.31)	(12.06)	(12.81)

English equivalents for metric specifications are shown in ( ).

WARNING
This product can expose you to chemicals including lead and DEHP, which are known to the State of California to cause cancer, and birth defects or other reproductive harm. For more information go to www.p65warnings.ca.gov

Tel: +45 63 12 83 00 | Email: ps@hymatik.com | www.hymatik.com | Hvidkaervej 27a, DK-5250 Odense SV, Denmark

Code: CS

Rear Mounting/Thru Bolting, 7/8-14 SAE O-Ring

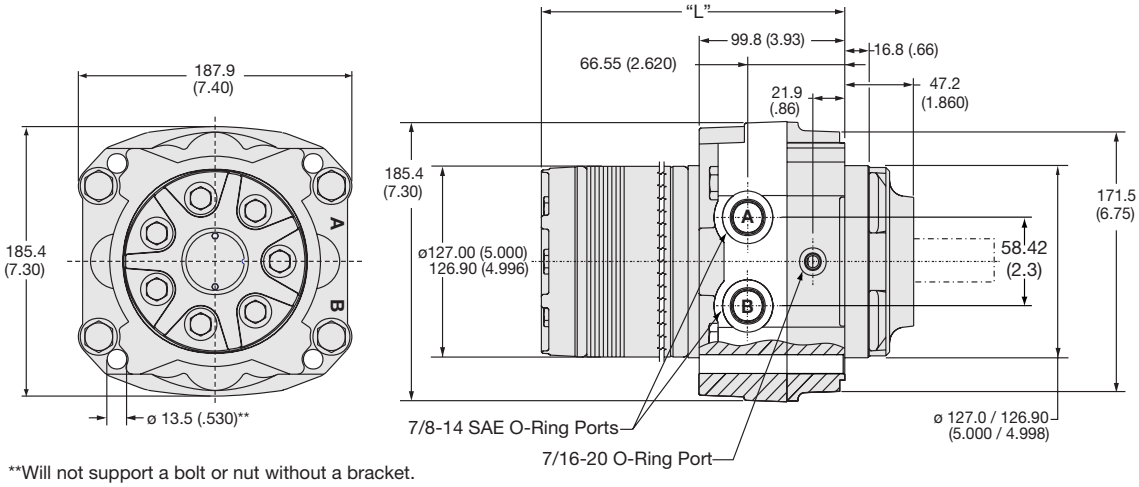

**Will not support a bolt or nut without a bracket.

Code CS		0140	0170	0195	0240	0280	0335	0405	0475	0530	0625	0785	0960
Weight / Gewicht	**kg**	**27.3**	**27.5**	**27.8**	**28.1**	**28.5**	**28.9**	**29.5**	**30.2**	**30.9**	**31.7**	**33.2**	**34.9**
Poids/Peso	(lb)	(60.2)	(60.8)	(61.3)	(62.1)	(63.0)	(63.9)	(65.2)	(66.7)	(68.3)	(69.9)	(73.3)	(77.1)
Length "L"	**mm**	**192.3**	**195.3**	**198.6**	**203.2**	**208.0**	**214.4**	**221.7**	**230.4**	**236.7**	**246.1**	**265.2**	**284.2**
"L"	(in)	(7.57)	(7.69)	(7.82)	(8.00)	(8.19)	(8.44)	(8.73)	(9.07)	(9.32)	(9.69)	(10.44)	(11.19)

Code: CB

Rear Mounting/Thru-Bolting, 7/8-14 SAE Rear Port

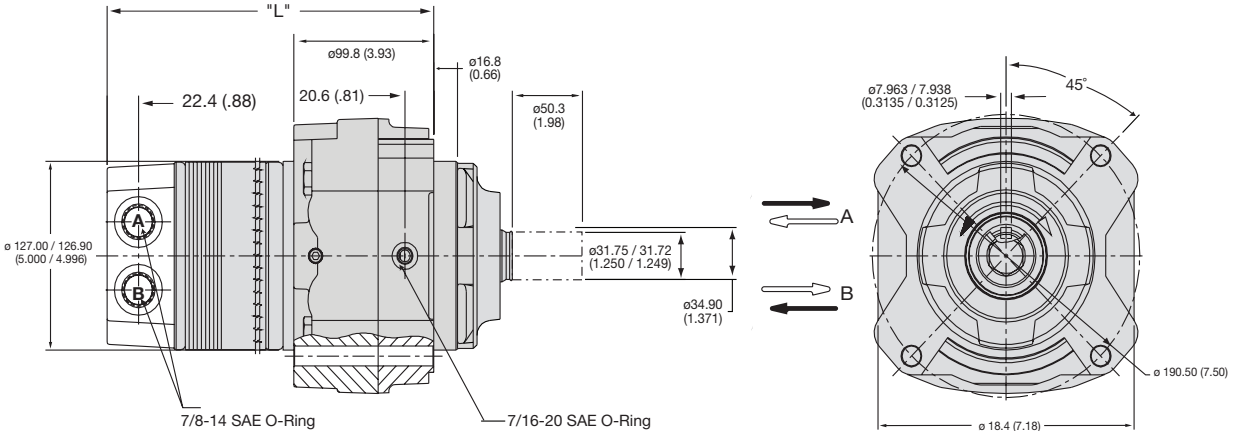

Code CB	disp	0140	0170	0195	0240	0280	0310	0335	0405	0475	0530	0625	0785	0960
Weight/Gewicht	kg	29.6	29.8	30.1	30.4	30.8	31.1	31.3	31.8	32.5	33.2	34.0	35.5	37.2
Poids/Peso	(lb)	(65.2)	(65.8)	(66.3)	(67.1)	(68.0)	(68.5)	(68.9)	(70.2)	(71.7)	(73.3)	(74.9)	(78.3)	(82.1)
Length "L"	mm	216.9	220.0	223.3	228.1	232.7	235.0	239.0	246.4	255.0	261.4	271.0	290.1	309.1
	(in)	(8.54)	(8.66)	(8.79)	(8.98)	(9.16)	(9.25)	(9.41)	(9.70)	(10.04)	(10.29)	(10.67)	(11.42)	(12.17)

English equivalents for metric specifications are shown in ( ).

WARNING
This product can expose you to chemicals including lead and DEHP, which are known to the State of California to cause cancer, and birth defects or other reproductive harm. For more information go to www.p65warnings.ca.gov

Tel: +45 63 12 83 00 | Email: ps@hymatik.com | www.hymatik.com | Hvidkaervej 27a, DK-5250 Odense SV, Denmark

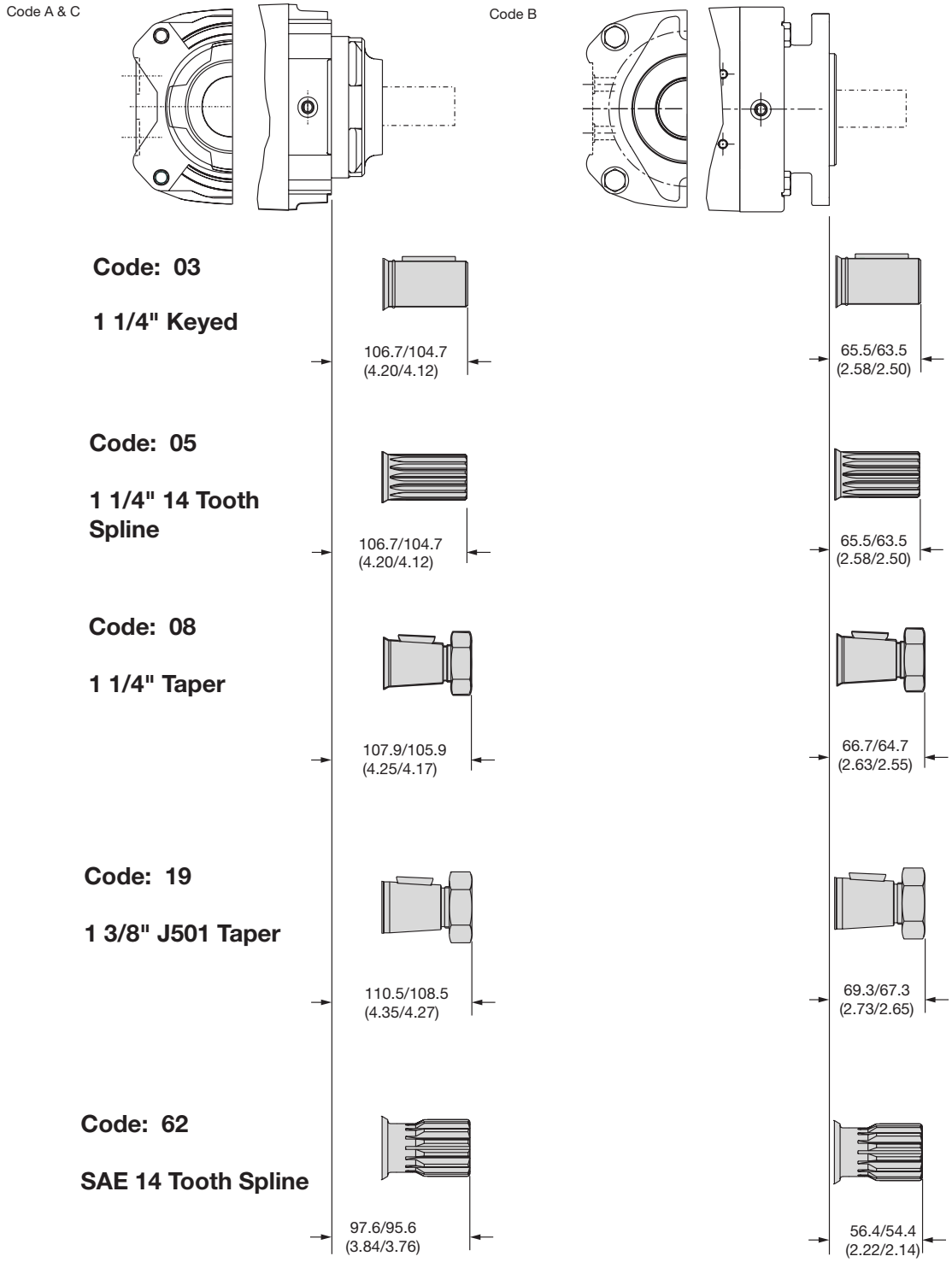

English equivalents for metric specifications are shown in ( ).

WARNING
This product can expose you to chemicals including lead and DEHP, which are known to the State of California to cause cancer, and birth defects or other reproductive harm. For more information go to www.p65warnings.ca.gov

Tel: +45 63 12 83 00 | Email: ps@hymatik.com | www.hymatik.com | Hvidkaervej 27a, DK-5250 Odense SV, Denmark

Code: 03

1 1/4" Keyed

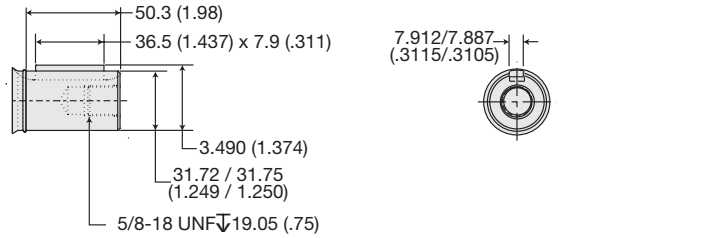

Code: 05

1 1/4" 14 Tooth Spline

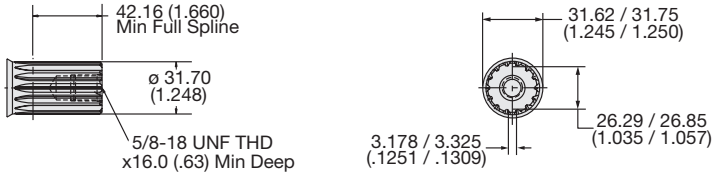

Code: 08

1 1/4" Taper

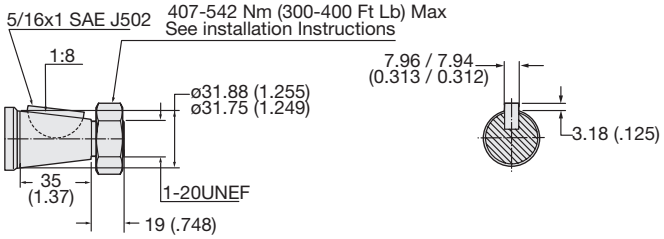

Code: 19

1 3/8" J501 Taper

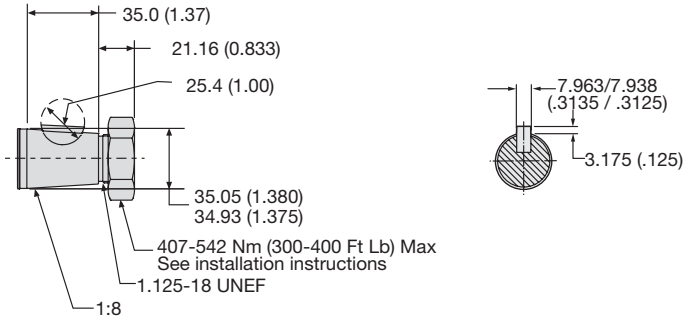

Code: 62

SAE 14 Tooth Spline

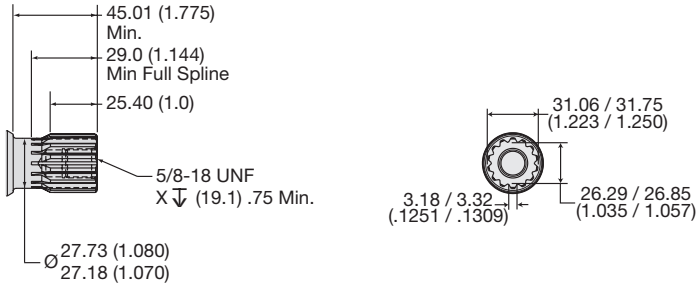

English equivalents for metric specifications are shown in ( ).

WARNING
This product can expose you to chemicals including lead and DEHP, which are known to the State of California to cause cancer, and birth defects or other reproductive harm. For more information go to www.p65warnings.ca.gov

Tel: +45 63 12 83 00 | Email: ps@hymatik.com | www.hymatik.com | Hvidkaervej 27a, DK-5250 Odense SV, Denmark

Technical Information /Technische Information / Segni/Informacion Tecnica

LSHT Torqmotors™ and Nichols™ Motors
DG Series Brake Motor HY13-1590-011/US,EU

13 Displacements		(8.6 to 58.5 in³/rev)
13 Schluckvolumen		**140 . . . 958 cm³/rev**
13 Cylindrée		
13 Despazamientos		
	Cont.	**Int.**
Maximum Pressure	(3000 psid)	(4000 psid)
Eingangsdruck	**. . . 207 bar**	**. . . 276 bar**
Pression entrée		
Presion Maxima		
Maximum Oil Flow		(30 gpm)
Schluckstrom		**. . . 114 lpm**
Débit d'huile		
Caudal Maximo de Aceite		
Maximum Speed		(660 rpm)
Drehzahl		**660 rpm**
Vitesse de rotation		
Velocidad Maxima		
	Cont.	**Int.**
Maximum Torque	(9,239 lb in)	(12,636 lb in)
MaxDrehmoment	**1044 Nm**	**1428 Nm**
Couple		
Torque Maximo		
Maximum Side Load at Key		(3597 lb)
Seitenlast		**. . . 16000 N**
Charges latèrales		
Carga Maxima Lateral		

A Mechanical Brake Motor for Tough Applications

Parker's DG Series brake motors consists of a mechanical drum brake mounted integrally to our rugged TG Series LSHT hydraulic motor. The compact size, reliable holding capacity and ease of installation make this motor with parking brake the ideal choice for the propulsion systems on many turf, agricultural and other vehicles.

The brake is available with either vertical or horizontally applied levers. The vertical style has fixed brake pads, while the horizontal version has floating brake pads that can be adjusted as required over the life of the brake. Both versions are for static applications only.

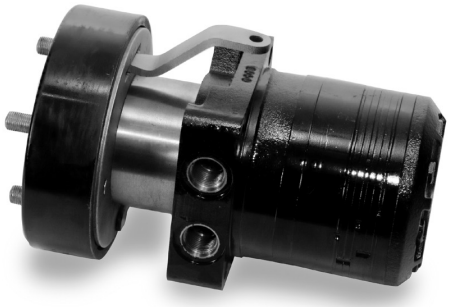

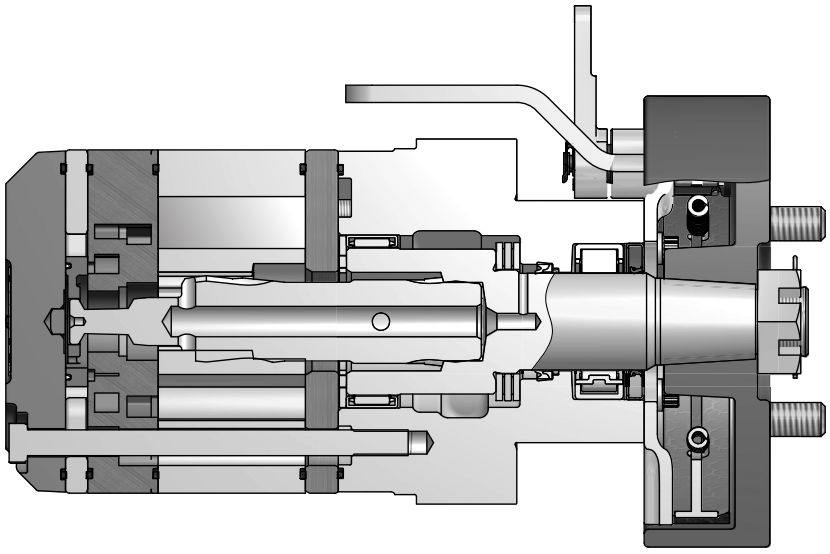

⚠ **WARNING**
This product can expose you to chemicals including lead and DEHP, which are known to the State of California to cause cancer, and birth defects or other reproductive harm. For more information go to www.p65warnings.ca.gov

Parker Hannifin Corporation
Pump & Motor Division
Greeneville, Tennessee, USA

DG	XXXX	XS	X	X
Series	Displacement Schluckvolumen Cylindrée Desplazamiento	Mounting/Ports Gehäuse/Anschluß Carter/Plan de raccordement Montaje/Lumbreras	Drum Type Trommelbremse Tipo de tambor Genre de tambour	Shaft Welle Arbre Eje

Code	cm^3/tr $cm^3/giro$ cm^3/U in^3/rev
0140	141 / 8.6
0170	169 / 10.3
0195	195 / 11.9
0240	238 / 14.5
0280	280 / 17.1
0310	310 / 18.9
0335	337 / 20.6
0360	360 / 22.2
0405	405 / 24.7
0475	477 / 29.1
0530	528 / 32.3
0625	623 / 38.0
0785	786 / 48.0
0960	959 / 58.5

Code	Drum Type
A	4 Bolt 
B	5 Bolt 

Code	Shaft
A8	1 1/4" Tapered 

Code	Mounting/Ports - Horizontal Lever
US	Wheel Mt. w/Brake Lever @ 270° / 7/8-14 SAE 
VS	Wheel Mt. w/Brake Lever @ 90° / 7/8-14 SAE 
YA	Wheel Mount w/ 2-Hole Horizontal Brake Lever @ 270° / 7/8 O-Ring Rear Axial 

Shaded areas indicate custom order components. Standard pricing and delivery terms may not apply to these components. Please refer to the price list for details, or consult your Parker Pump Motor division Sales Resource.

WARNING
This product can expose you to chemicals including lead and DEHP, which are known to the State of California to cause cancer, and birth defects or other reproductive harm. For more information go to www.p65warnings.ca.gov

Tel: +45 63 12 83 00 | Email: ps@hymatik.com | www.hymatik.com | Hvidkaervej 27a, DK-5250 Odense SV, Denmark

Ordering Information / Bestellschlüssel
System de Commande / Imformacion para pedidos

LSHT Torqmotors™ and Nichols™ Motors
DG Series Brake Motor
HY13-1590-011/US,EU

0

Rotation
Drehrichtung
Direction de rotation
Rotacion

Code	Front Port Rotation
0	Standard 
1	Reverse Timed Manifold 

XXXX

Options
Opciones

Code	Options
AAAA	"Standard", Black Paint (045134), Paint area all over except front and rear pilot and mounting flanges and shaft
AAAB	"Standard", No Paint
AAAC	"Standard", Double Paint (045247), Paint area all over except front and rear pilot and mounting flanges and shaft
AABJ	Free Running Rotor Set, Black paint (045134), Paint area all over except front and rear pilot and mounting flanges and shaft
AAFA	Fluorocarbon (Viton) Seals, High Temp Commutator Seal, No paint
AAFW	Fluorocarbon (Viton) Seals, High Temp Commutator Seal, Black paint (045134), Paint area all over except front and rear pilot and mounting flanges and shaft
AAVE	Free Running Rotor Set, Fluorocarbon (Viton) Seals, High Temp Commutator Seal, Black Paint (045134), Paint area all over except front and rear pilot and mounting flanges and shaft

Shaded areas indicate custom order components. Standard pricing and delivery terms may not apply to these components. Please refer to the price list for details, or consult your Parker Pump Motor division Sales Resource.

WARNING
This product can expose you to chemicals including lead and DEHP, which are known to the State of California to cause cancer, and birth defects or other reproductive harm. For more information go to www.p65warnings.ca.gov

Parker Hannifin Corporation
Pump & Motor Division
Greeneville, Tennessee, USA

Vertical Lever

Holding capacity is 497 Nm (4,400 in lbs) with 68 Nm (600 in lbs) of input torque at lever pivot. Brake capacities are typical for non-burnished brake shoe. OEM testing required to verify actual field conditions.

Das maximale Bremsmoment von 497 Nm (4400 in lbs) wird erreicht durch Betätigung des Bremshebels mit 68 Nm (600 in lbs).
Genannte Einsatzdaten beziehen sich auf Neuprodukte. Die Eignung der Geräte ist vom Anwender für den jeweiligen Einsatz individuell zu prüfen.

La puissance de maintien est de 497 Nm (4400 pouces-livres) avec couple d'entrée au pivot du levier de 68 Nm (600 pouces-livres). Les puissances de freinage sont typiques pour des sabots de frein non brunis. Les essais imposés par le constructeur d'origine exigent la vérification des conditions réelles sur place.

Capacidad de retención de 497 N-m (4.400 libras-pulgada) con 69 N-m (600 libras-pulgada) de torque de entrada en el brazo de articulación. Los valores de capacidad de frenado son típicas para zapatas de freno no bruñidas. Para fabricantes de equipos originales se deben efectuar pruebas bajo condiciones reales de funcionamiento.

Horizontal Lever

Brake Torque and Travel of 3.72 inch Horizontal Lever

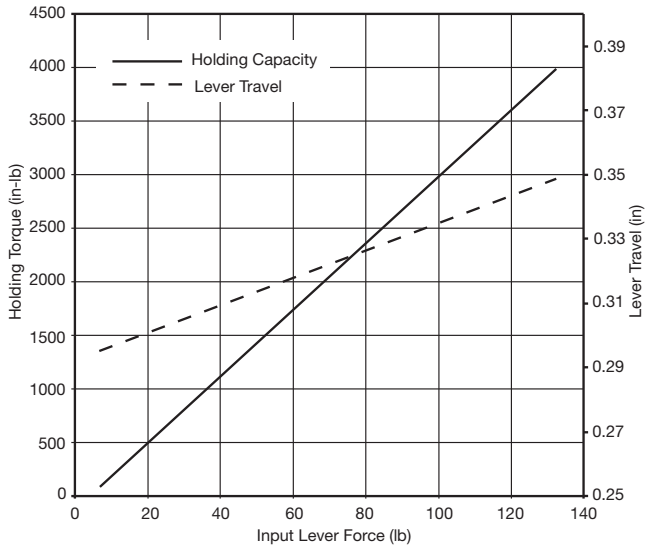

WARNING
This product can expose you to chemicals including lead and DEHP, which are known to the State of California to cause cancer, and birth defects or other reproductive harm. For more information go to www.p65warnings.ca.gov

Tel: +45 63 12 83 00 | Email: ps@hymatik.com | www.hymatik.com | Hvidkaervej 27a, DK-5250 Odense SV, Denmark

Wheel Mount/Radnabengehäuse
Monture à roue/ Montaje de rueda

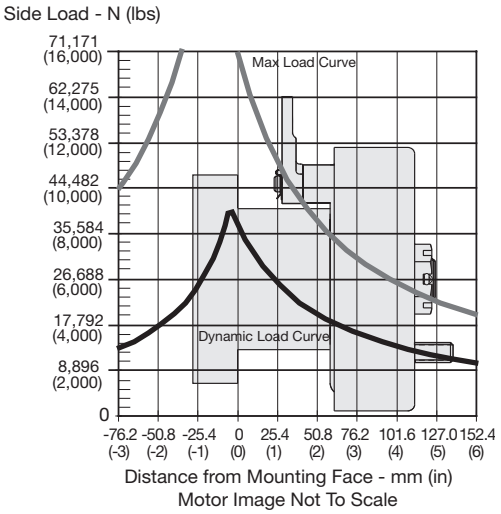

Motor Image Not To Scale

The dynamic side load curve is based on uni-directional steady state loads for L_{10} bearing life at 3 x 10^6 revolutions.
Die zulässige auslegbare radiale Wellenbelastungskurve ist unter ruhenden, einseitig statisch gerichteten Lastverhältnissen auf eine L_{10} Lebensdauer mit 3 x 10^6 Umdrehungen kalkuliert.
La courbe de charge latérale permise se base sur des charges unidirectionnelles en régime permanent pour le roulement L_{10} à 3 x 10^6 révolutions.
La curva de valores admisibles de carga lateral está basada en cargas constantes para cojinetes L_{10} a 3 x 10^6 revoluciones.

The maximum load curve is defined by bearing static load capacity. This curve should not be exceeded at any time including shock loads.
Die maximale radiale Wellenbelastungskurve ist definiert als maximale statische Last ohne Drehzahl. Sie gilt als Grenze und sollte keinesfalls überschritten werden.
La courbe de charge maximale est définie par la capacité de charge statique portante. Cette courbe ne devrait être dépassée en aucun moment y compris pour les charges par à-coups.
La curva de carga máxima queda definida por la capacidad de carga estática del cojinete. No se deben superar los valores de esta curva, ni siquiera con cargas provisorias de impacto.

Equation to Calculate the Expected Radial Bearing Life
Gelichung zur Ermittlung der Lagerlebensdauer

Equation to calculate the dynamic bearing life for a given load:
Bestimmung der erlaubten radialen Wellenbelastung mit vorgegebener Last

Use F_a, F_b and S in equation to determine hours of L_{10} bearing life.
Die Lebensdauer in Stunden ergibt sich durch einsetzen von F_a, F_b, und S in die nachstehende Formel.

$$L = \frac{3 \times 10^6}{60 \times S} \left\{ \frac{F_a}{F_b} \right\}^{3.33}$$

Where / Mit:

S = Shaft Speed RPM / Abtriebswellendrehzahl in min^{-1}
L = Life In Hours / Lebensdauer in Stunden
F_a = Dynamic side load defined by above curve at a distance from mounting flange. / Erlaubte radiale Wellenbelastung als Function der Laenge
F_b = Application side load. / Anwendungsseitige Wellenbelastung

Note: Calculations are based on L_{10} bearing life per ISO 281.
Auslegung basiert auf einer L_{10} Lenbendauer nach ISO 281

WARNING
This product can expose you to chemicals including lead and DEHP, which are known to the State of California to cause cancer, and birth defects or other reproductive harm. For more information go to www.p65warnings.ca.gov

Tel: +45 63 12 83 00 | Email: ps@hymatik.com | www.hymatik.com | Hvidkaervej 27a, DK-5250 Odense SV, Denmark

Code: AS - Vertical Lever

Wheel Mount w/Brake Lever / 7/8-14 SAE O-Ring

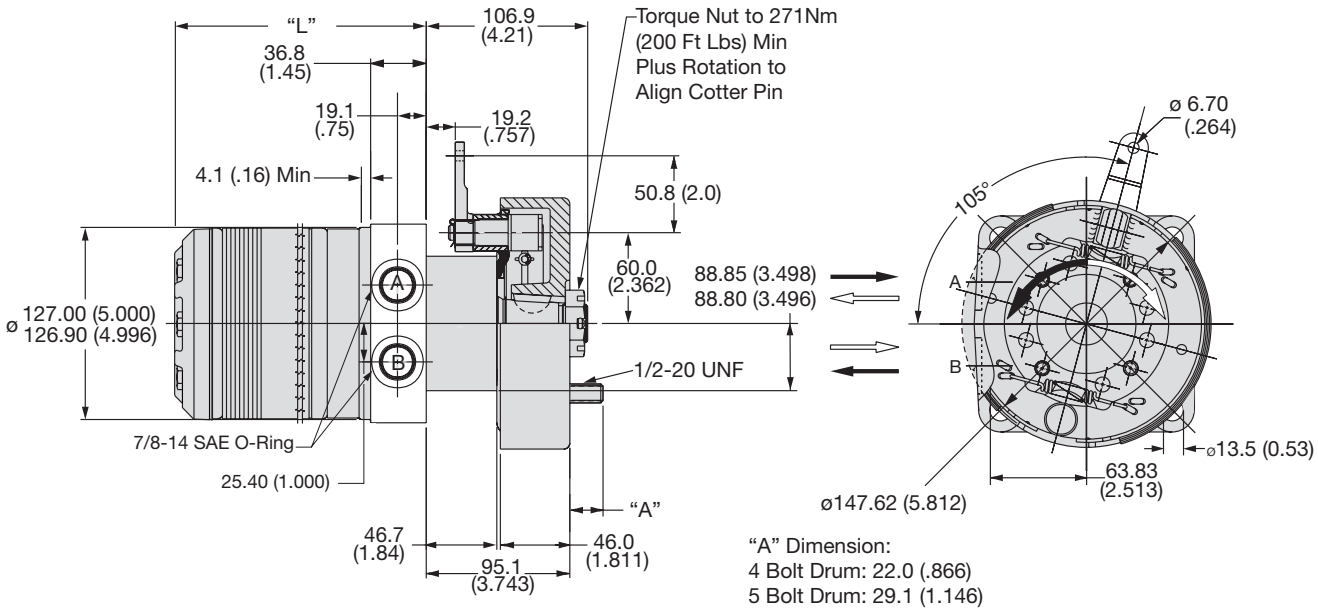

Note:

1. Brake Acuation Lever can be positioned in 12.00° increments from that shown.
   Bremshebel ist kreisförmig in Sigmenten von 12.00 ° positionierbar.
   Le levier de commande du frein peut être positionné à des échelons d'accroissement de 12,00° de ce qui est montré.
   El brazo de actuación del freno se puede colocar en avances de 12,00 grados con respecto a la posición mostrada.
2. Brake Acuation Lever is shipped unattached, secured with wire or tiewrap to assembly.
   Hebel ist anbei. Endmontage erforderlich.
   Le levier de commande du frein est expédié sous forme détachée; il est attaché à l'ensemble avec du fil ou du ruban.
   El brazo de actuación del freno se suministra suelto, sin conexión, sólo atado provisoriamente al mecanismo.

Code AS	disp.	0140	0170	0195	0240	0280	0310	0335	0405	0475	0530	0625	0785	0960
Weight/Gewicht	**kg**	**14.6**	**14.8**	**15.1**	**15.5**	**15.9**	**16.1**	**16.3**	**16.9**	**17.5**	**18.3**	**19.0**	**20.5**	**22.2**
Poids/Peso	(lb)	(41.3)	(41.8)	(42.4)	(43.2)	(44.1)	(44.6)	(44.9)	(46.3)	(47.7)	(49.4)	(50.9)	(54.4)	(58.1)
Length	**"L" mm**	**150.4**	**153.4**	**156.7**	**161.3**	**166.1**	**169.7**	**172.5**	**179.8**	**188.5**	**194.8**	**204.2**	**223.3**	**242.3**
	"L" (in)	(5.92)	(6.04)	(6.17)	(6.35)	(6.54)	(6.68)	(6.79)	(7.08)	(7.42)	(7.67)	(8.04)	(8.79)	(9.54)

For performance data curves, see TG section.

English equivalents for metric specifications are shown in ( ).

WARNING
This product can expose you to chemicals including lead and DEHP, which are known to the State of California to cause cancer, and birth defects or other reproductive harm. For more information go to www.p65warnings.ca.gov

Tel: +45 63 12 83 00 | Email: ps@hymatik.com | www.hymatik.com | Hvidkaervej 27a, DK-5250 Odense SV, Denmark

Code: US - Horizontal Lever

Wheel Mount w/Brake Lever / 7/8-14 SAE O-Ring

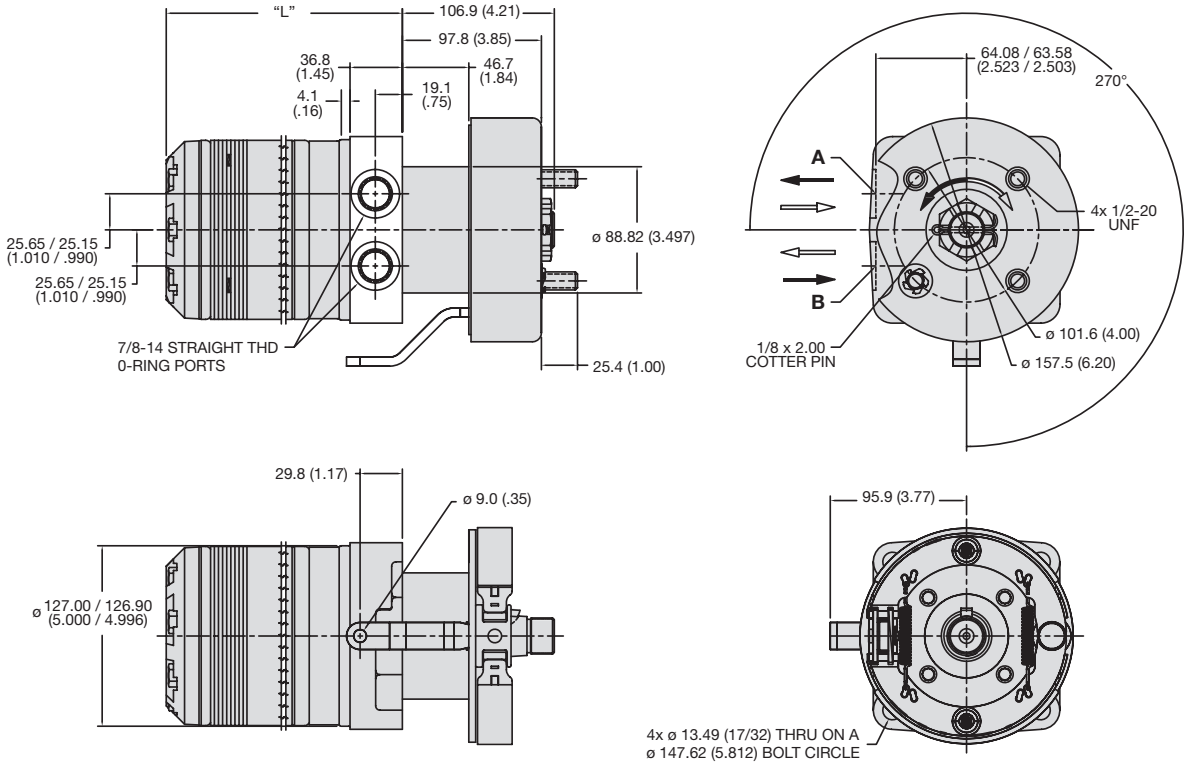

Note:
Brake Acuation Lever can be positioned in 90° increments from that shown.
Bremshebel ist kreisförmig in Sigmenten von 90° positionierbar.
Le levier de commande du frein peut être positionné à des échelons d'accroissement de 90° de ce qui est montré.
El brazo de actuación del freno se puede colocar en avances de 90° grados con respecto a la posición mostrada.

Code US	**disp.**	**0140**	**0170**	**0195**	**0240**	**0280**	**0310**	**0335**	**0405**	**0475**	**0530**	**0625**	**0785**	**0960**
Weight/Gewicht	**kg**	**14.6**	**14.8**	**15.1**	**15.5**	**15.9**	**16.1**	**16.3**	**16.9**	**17.5**	**18.3**	**19.0**	**20.5**	**22.2**
Poids/Peso	(lb)	(41.3)	(41.8)	(42.4)	(43.2)	(44.1)	(44.6)	(44.9)	(46.3)	(47.7)	(49.4)	(50.9)	(54.4)	(58.1)
Length	**"L" mm**	**150.4**	**153.4**	**156.7**	**161.3**	**166.1**	**169.7**	**172.5**	**179.8**	**188.5**	**195.6**	**204.2**	**223.3**	**242.3**
	"L" (in)	(5.92)	(6.04)	(6.17)	(6.35)	(6.54)	(6.68)	(6.79)	(7.08)	(7.42)	(7.67)	(8.04)	(8.79)	(9.54)

For performance data curves, see TG section.

English equivalents for metric specifications are shown in ( ).

WARNING
This product can expose you to chemicals including lead and DEHP, which are known to the State of California to cause cancer, and birth defects or other reproductive harm. For more information go to www.p65warnings.ca.gov

Tel: +45 63 12 83 00 | Email: ps@hymatik.com | www.hymatik.com | Hvidkaervej 27a, DK-5250 Odense SV, Denmark

Drum Type/Trommelbremse/ Tipo de tambor/ Genre de Tambour

Code: A

4 Bolt

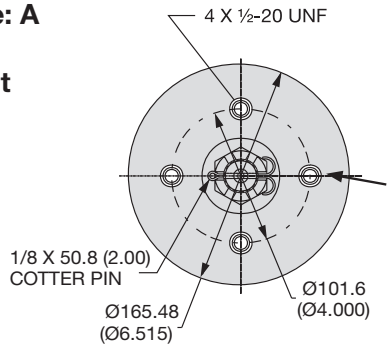

Code: B

5 Bolt

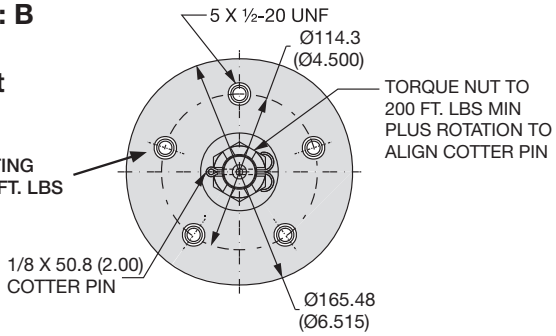

Shafts / Abtriebswellen Arbre / Ejes

Code: 8

1 1/4" Taper

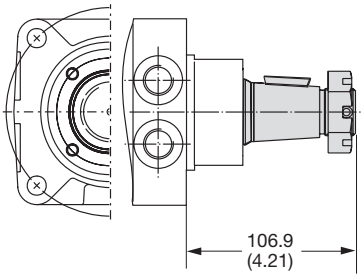

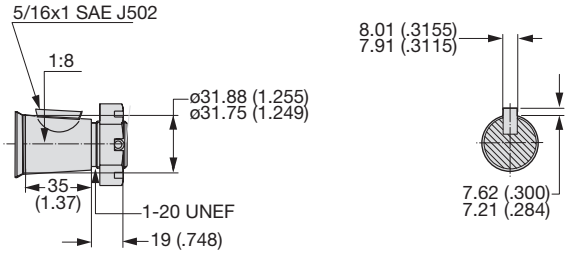

English equivalents for metric specifications are shown in ( ).

WARNING
This product can expose you to chemicals including lead and DEHP, which are known to the State of California to cause cancer, and birth defects or other reproductive harm. For more information go to www.p65warnings.ca.gov

Tel: +45 63 12 83 00 | Email: ps@hymatik.com | www.hymatik.com | Hvidkaervej 27a, DK-5250 Odense SV, Denmark

Technical Information /Technische Information / Segni/Informacion Tecnica

LSHT Torqmotors™ and Nichols™ Motors
TH Series / Serie / Série HY13-1590-011/US,EU

13 Displacements **13 Schluckvolumen** **13 Cylindrée** **13 Despazamientos**		(8.6 to 58.5 in³/rev) **141 . . . 959 cm³/rev**
	Cont.	**Int.**
Maximum Pressure **Eingangsdruck** **Pression entrée** **Presion Maxima**	(3000 psid) **. . . 207 bar**	(4000 psid) **. . . 276 bar**
Maximum Oil Flow **Schluckstrom** **Débit d'huile** **Caudal Maximo de Aceite**		(30 gpm) **. . . 114 lpm**
Maximum Speed **Drehzahl** **Vitesse de rotation** **Velocidad Maxima**		(660 rpm) **660 rpm**
	Cont.	**Int.**
Maximum Torque **MaxDrehmoment** **Couple** **Torque Maximo**	(8,772 lb in) **991 Nm**	(11,876 lb in) **1342 Nm**
Maximum Side Load at Key **Seitenlast** **Charges latèrales** **Carga Maxima Lateral**		(4800 lb) **. . . 21360 N**

A Rugged Motor for Heavy Duty, High Side Load Applications

This motor was designed for tough applications. A stout drive link with unique 60:40 spline geometry will transmit over 13,000 lb-in of torque. The 1-1/2" output shaft can support 7000 pounds of radial load. Efficiency is assured by the use of roller vanes and sealed commutator. Durability is maintained by continually washing the powertrain splines and shaft seal in cooling fluid.

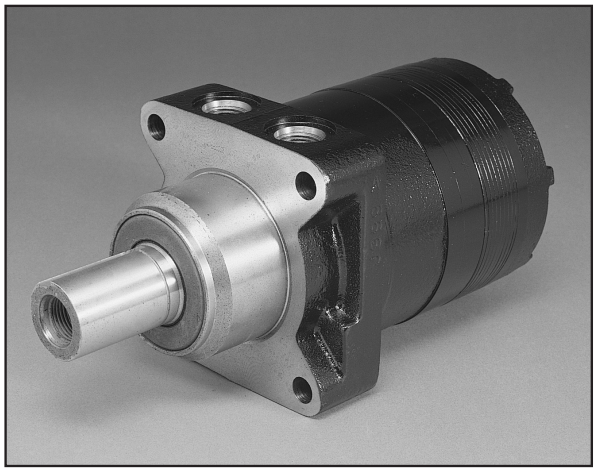

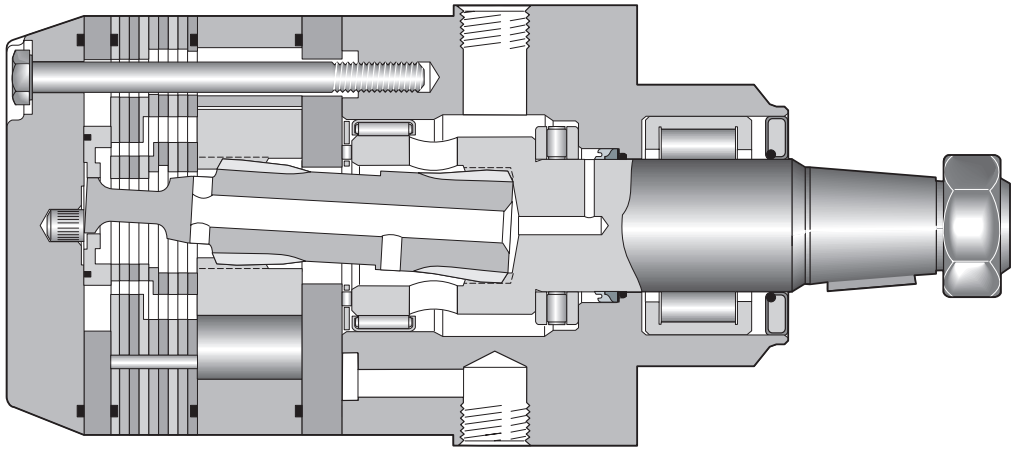

014 TH.indd, b

⚠ **WARNING**
This product can expose you to chemicals including lead and DEHP, which are known to the State of California to cause cancer, and birth defects or other reproductive harm. For more information go to www.p65warnings.ca.gov

TH

Series

XXXX

Displacement
Schluckvolumen
Cylindrée
Desplazamiento

Code	cm³/tr cm³/giro cm³/U in³/rev
0140	141 / 8.6
0170	169 / 10.3
0195	195 / 11.9
0240	238 / 14.5
0280	280 / 17.1
0310	310 / 18.9
0335	337 / 20.6
0360	360 / 22.2
0405	405 / 24.7
0475	477 / 29.1
0530	528 / 32.3
0625	623 / 38.0
0785	786 / 48.0
0960	959 / 58.5

XX

Mounting/Ports
Gehäuse/Anschluß
Carter/Plan de raccordement
Montaje/Lumbreras

Code	Mounting/Ports
PA	SAE "B" 4 Bolt 7/8-14 SAE O-Ring; Rear Axial
UB	Wheel, Standard 7/8-14 SAE O-Ring; Rear Radial
US	Wheel, Standard, 7/8-14 SAE
FS	Large Wheel Mt., rearport
KB	SAE CC 4 Bolt 7/8-14 SAE O-Ring; Rear Radial
MS	Magneto, 7/8-14 SAE
PB	SAE "B" 4 Bolt 7/8-14 SAE O-Ring; Rear Radial
UX	G1/2 (1/2 BSPP) Rear Radial

Custom Order

XX

Shaft
Welle
Arbre
Eje

Code	Shaft
31	1 1/2" J501 Taper
36	1 1/2" 17 Tooth 12/24 Spline
03	1 1/4" Keyed
32	1 1/2" Keyed
62	14 Tooth Spline (12/24 P.), (SAE)
73	17 Tooth Spline (12/24 P.) (full length spline) M12 Tap

Custom Order

Shaded areas indicate custom order components. Standard pricing and delivery terms may not apply to these components. Please refer to the price list for details, or consult your Parker Pump Motor division Sales Resource.

WARNING
This product can expose you to chemicals including lead and DEHP, which are known to the State of California to cause cancer, and birth defects or other reproductive harm. For more information go to www.p65warnings.ca.gov

Parker Hannifin Corporation
Pump & Motor Division
Greeneville, Tennessee, USA

Tel: +45 63 12 83 00 | Email: ps@hymatik.com | www.hymatik.com | Hvidkaervej 27a, DK-5250 Odense SV, Denmark

0

Rotation
Drehrichtung
Direction de rotation
Rotacion

Code	Front Port Rotation
0	Standard 
1	Reverse Timed Manifold 

Code	Rear Rotation
0	Standard 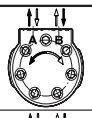
1	Reverse Timed Manifold 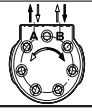

Rotation viewed from shaft end.

XXXX

Options
Opciones

Code	Options
AAAA	"Standard", Black Paint (045134), Paint area all over except front and rear pilot and mounting flanges and shaft
AAAB	"Standard", No Paint
AAAC	"Standard", Double Paint (045247), Paint area all over except front and rear pilot and mounting flanges and shaft
AABJ	Free Running Rotor Set, Black paint (045134), Paint area all over except front and rear pilot and mounting flanges and shaft
AABT	Black paint (045134), Paint area all over except front and rear pilot and mounting flanges and shaft, No shaft hardware
AAJL	No paint, No shaft hardware
ABCZ	Fluorocarbon (Viton) Seals, Double paint (045247), Paint area all over except front and rear pilot and mounting flanges and shaft

Shaded areas indicate custom order components. Standard pricing and delivery terms may not apply to these components. Please refer to the price list for details, or consult your Parker Pump Motor division Sales Resource.

WARNING
This product can expose you to chemicals including lead and DEHP, which are known to the State of California to cause cancer, and birth defects or other reproductive harm. For more information go to www.p65warnings.ca.gov

Tel: +45 63 12 83 00 | Email: ps@hymatik.com | www.hymatik.com | Hvidkaervej 27a, DK-5250 Odense SV, Denmark

Performance Data / Leistungsdaten
Puissance / Datos Tecnicos

LSHT Torqmotors™ and Nichols™ Motors
TH Series / Serie / Série HY13-1590-011/US,EU

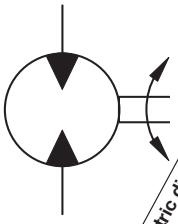

Motor Series TH	Geometric displacement cm³/rev in³/rev	Max. speed @ Max. intermittent flow rev/min	Max. differential pressure cont / int* l/min g/min		Max. differential pressure cont / int* bar psid		Max. supply pressure max bar psig	Max. torque cont / int* Nm lb-in		Max. performance max KW HP	Min. starting torque cont / int* Nm lb-in	
TH 0140	**141** 8.6	660	**76** 20	**95** 25	**207** 3000	**276** 4000	**300** 4350	**390** 3455	**530** 4692	**33** 45	**315** 2791	**418** 3706
TH 0170	**169** 10.3	554	**76** 20	**95** 25	**207** 3000	**276** 4000	**300** 4350	**476** 4216	**646** 5714	**33** 45	**376** 3331	**505** 4469
TH 0195	**195** 11.9	477	**76** 20	**95** 25	**207** 3000	**276** 4000	**300** 4350	**556** 4919	**753** 6663	**33** 45	**451** 3989	**611** 5408
TH 0240	**238** 14.5	393	**76** 20	**95** 25	**207** 3000	**276** 4000	**300** 4350	**677** 5991	**913** 8081	**32** 44	**582** 5152	**776** 6865
TH 0280	**280** 17.1	334	**76** 20	**95** 25	**207** 3000	**276** 4000	**300** 4350	**796** 7044	**1073** 9499	**31** 42	**675** 5972	**870** 7699
TH 0310	**310** 18.9	303	**76** 20	**95** 25	**207** 3000	**276** 4000	**300** 4350	**964** 8533	**1297** 11479	**30** 41	**843** 7458	**1117** 9889
TH 0335	**337** 20.6	277	**76** 20	**95** 25	**207** 3000	**276** 4000	**300** 4350	**924** 8184	**1229** 10817	**31** 41	**778** 6882	**1005** 8893
TH 0360	**360** 22.2	259	**76** 20	**95** 25	**172** **2500**	**241** 3500	**300** 4350	**894** 7913	**1253** 11093	**29** 39	**703** 6224	**1017** 9007
TH 0405	**405** 24.7	232	**76** 20	**95** 25	**172** 2500	**241** 3500	**300** 4350	**942** 8336	**1342** 11877	**27** 37	**791** 7002	**1145** 10133
TH 0475	**477** 29.1	237	**76** 20	**114** 30	**138** 2000	**207** 3000	**300** 4350	**887** 7853	**1372** 12145	**28** 38	**740** 6549	**1120** 9909
TH 0530	**528** 32.3	213	**76** 20	**114** 30	**138** 2000	**172** 2500	**300** 4350	**983** 8701	**1253** 11086	**23** 31	**874** 7737	**1091** 9657
TH 0625	**623** 38.0	182	**76** 20	**114** 30	**121** 1750	**155** 2250	**300** 4350	**986** 8727	**1291** 11424	**20** 27	**895** 7924	**1165** 10312
TH 0785	**786** 48.0	143	**76** 20	**114** 30	**103** 1500	**138** 2000	**300** 4350	**1044** 9239	**1428** 12636	**17** 23	**991** 8772	**1341** 11876
TH 0960	**959** 58.5	118	**76** 20	**114** 30	**69** 1000	**103** 1500	**300** 4350	**773** 6843	**1268** 11227	**12** 16	**763** 6752	**1177** 10419

Performance data based on testing using 10W40 oil with a viscosity of 200 SUS at 54° C (130° F.). Performance data is typical. Actual data may vary slightly from one production motor to another.

Les donnees sur les performances sont basees sur des tests utilisant de l'huile 10W40 d'une viscosite de 200 SUS a 54°C (130°F). Ces donnees correspondent a des situations typiques. Les donnees reelles peuvent varier legerement d'un moteur de production a l'autre.

Leistungsdaten sind gemessen mit SAE 10W40 bei einer Viskositaet von 43,1 Cst bei 54ºC. Geringfuegige Abweichungen von den Katalogdaten sind moeglich.

Datos tecnicos obtenidos con aceite 10W40 de 200 SUS de viscosidad a 54°C (130°F). Los datos proporcionados son valores tipcos. Los valores exactos reales podrian tener una pequena variacion entre distintos motores.

* Intermittent operation rating applies to 10% of every minute.
Intermittierende Werte maximal 10% von jeder Betriebsminute.
Fonctionnement interm. 10% max. de chaque minute d`utilisation.
Capacidad de funcionamiento intermitente valida para 10% por cada minuto.

WARNING
This product can expose you to chemicals including lead and DEHP, which are known to the State of California to cause cancer, and birth defects or other reproductive harm. For more information go to www.p65warnings.ca.gov

Tel: +45 63 12 83 00 | Email: ps@hymatik.com | www.hymatik.com | Hvidkaervej 27a, DK-5250 Odense SV, Denmark

TH 0140

8.6 cu in / rev

PRESSURE (PSID)

Flow (GPM)	500	1000	1500	2000	2500	3000	3500	4000
.5	519 **9**	1060 **4**						
1	540 **22**	1090 **17**	1635 **11**	2180 **6**				
2	569 **49**	1156 **43**	1730 **36**	2286 **30**	2827 **23**	3368 **19**	3899 **12**	4447 **12**
3	565 **75**	1159 **69**	1744 **62**	2321 **55**	2899 **47**	3477 **40**	4048 **33**	4608 **29**
4	564 **102**	1170 **94**	1768 **87**	2358 **80**	2943 **72**	3517 **64**	4082 **57**	4644 **52**
5	556 **128**	1170 **120**	1776 **112**	2375 **105**	2968 **97**	3556 **89**	4135 **81**	4701 **76**
7	540 **182**	1160 **172**	1779 **164**	2390 **155**	2994 **146**	3592 **138**	4181 **130**	4763 **123**
9	515 **235**	1143 **225**	1768 **215**	2385 **206**	2996 **196**	3601 **187**	4199 **179**	4794 **171**
12	471 **315**	1096 **303**	1729 **292**	2356 **281**	2974 **271**	3587 **261**	4193 **252**	4794 **243**
15	418 **395**	1042 **381**	1673 **368**	2307 **357**	2933 **346**	3549 **336**	4163 **325**	4771 **314**
20	299 **528**	931 **512**	1565 **497**	2198 **484**	2825 **472**	3455 **459**	4078 **447**	4692 **435**
25	173 **660**	794 **643**	1426 **626**	2059 **612**	2695 **598**	3332 **583**	3961 **569**	4579 **555**

TORQUE (LB IN) 3332
SPEED (RPM) 583

■ Cont. □ Int.

Intermittent operation rating applies to 10% of every minute.

Fonctionnement interm. 10% max. de chaque minute d`utilisation.

Performance data based on testing using 10W40 oil with a viscosity of 200 SUS at 54° C (130° F.). Performance data is typical. Actual data may vary slightly from one production motor to another.

Les donnees sur les performances sont basees sur des tests utilisant de l'huile 10W40 d'une viscosite de 200 SUS a 54°C (130°F). Ces donnees correspondent a des situations typiques. Les donnees reelles peuvent varier legerement d'un moteur de production a l'autre.

Intermittierende Werte maximal 10% von jeder Betriebsminute.

Capacidad de funcionamiento intermitente valida para 10% por cada minuto.

Leistungsdaten sind gemessen mit SAE 10W40 bei einer Viskositaet von 43,1 Cst bei 54°C. Geringfuegige Abweichungen von den Katalogdaten sind moeglich.

Datos tecnicos obtenidos con aceite 10W40 de 200 SUS de viscosidad a 54°C (130°F). Los datos proporcionados son valores tipcos. Los valores exactos reales podrian tener una pequena variacion entre distintos motores.

WARNING
This product can expose you to chemicals including lead and DEHP, which are known to the State of California to cause cancer, and birth defects or other reproductive harm. For more information go to www.p65warnings.ca.gov

Tel: +45 63 12 83 00 | Email: ps@hymatik.com | www.hymatik.com | Hvidkaervej 27a, DK-5250 Odense SV, Denmark

TH 0170

10.3 cu in / rev

PRESSURE (PSID)

Flow (GPM)	500	1000	1500	2000	2500	3000	3500	4000
.5	620 **9**	1284 **7**	1945 **5**	2613 **4**	3293 **3**	3983 **2**		
1	652 **20**	1337 **18**	2006 **16**	2683 **14**	3375 **12**	4063 **11**	4744 **8**	5402 **8**
2	678 **42**	1390 **40**	2105 **37**	2822 **35**	3535 **32**	4226 **30**	4909 **27**	5587 **25**
3	678 **64**	1397 **61**	2117 **58**	2836 **56**	3554 **53**	4263 **50**	4963 **46**	5652 **44**
4	679 **86**	1409 **83**	2142 **80**	2872 **77**	3596 **74**	4310 **71**	5021 **67**	5716 **64**
5	675 **108**	1413 **104**	2150 **101**	2885 **98**	3616 **94**	4339 **91**	5057 **87**	5761 **83**
7	661 **153**	1405 **148**	2152 **143**	2900 **140**	3642 **136**	4374 **132**	5101 **127**	5818 **123**
9	632 **197**	1385 **191**	2140 **186**	2891 **181**	3638 **177**	4380 **173**	5114 **168**	5838 **163**
12	583 **263**	1334 **256**	2096 **250**	2860 **244**	3617 **239**	4362 **234**	5101 **228**	5823 **223**
15	524 **330**	1275 **322**	2035 **314**	2804 **308**	3572 **302**	4327 **296**	5070 **289**	5801 **283**
20	382 **442**	1143 **432**	1908 **422**	2683 **413**	3455 **406**	4216 **399**	4972 **391**	5714 **383**
25	239 **554**	983 **543**	1747 **531**	2523 **520**	3299 **511**	4071 **501**	4839 **492**	5591 **483**

TORQUE (LB IN) 4839
SPEED (RPM) 492

■ Cont. □ Int.

Intermittent operation rating applies to 10% of every minute.

Fonctionnement interm. 10% max. de chaque minute d`utilisation.

Performance data based on testing using 10W40 oil with a viscosity of 200 SUS at 54° C (130° F.). Performance data is typical. Actual data may vary slightly from one production motor to another.

Les donnees sur les performances sont basees sur des tests utilisant de l'huile 10W40 d'une viscosite de 200 SUS a 54°C (130°F). Ces donnees correspondent a des situations typiques. Les donnees reelles peuvent varier legerement d'un moteur de production a l'autre.

Intermittierende Werte maximal 10% von jeder Betriebsminute.

Capacidad de funcionamiento intermitente valida para 10% por cada minuto.

Leistungsdaten sind gemessen mit SAE 10W40 bei einer Viskositaet von 43,1 Cst bei 54°C. Geringfuegige Abweichungen von den Katalogdaten sind moeglich.

Datos tecnicos obtenidos con aceite 10W40 de 200 SUS de viscosidad a 54°C (130°F). Los datos proporcionados son valores tipcos. Los valores exactos reales podrian tener una pequena variacion entre distintos motores.

WARNING
This product can expose you to chemicals including lead and DEHP, which are known to the State of California to cause cancer, and birth defects or other reproductive harm. For more information go to www.p65warnings.ca.gov

Tel: +45 63 12 83 00 | Email: ps@hymatik.com | www.hymatik.com | Hvidkaervej 27a, DK-5250 Odense SV, Denmark

TH 0195

11.9 cu in / rev

PRESSURE (PSID)

	500	1000	1500	2000	2500	3000	3500	4000
.5	733 **7**	1503 **3**						
1	761 **16**	1546 **13**	2326 **8**	3104 **3**				
2	799 **35**	1638 **32**	2465 **27**	3270 **21**	4046 **16**	4813 **11**	5589 **7**	6375 **6**
3	794 **55**	1639 **50**	2476 **45**	3303 **39**	4132 **34**	4970 **28**	5792 **23**	6595 **19**
4	794 **74**	1654 **69**	2509 **64**	3356 **58**	4196 **52**	5023 **46**	5830 **40**	6635 **35**
5	783 **93**	1653 **88**	2517 **83**	3375 **76**	4224 **70**	5065 **64**	5895 **58**	6710 **52**
7	762 **131**	1637 **126**	2514 **120**	3384 **113**	4245 **106**	5098 **99**	5940 **92**	6772 **86**
9	731 **170**	1616 **164**	2499 **157**	3373 **150**	4239 **142**	5093 **135**	5936 **127**	6774 **120**
12	677 **228**	1562 **221**	2455 **213**	3343 **205**	4217 **196**	5081 **188**	5934 **179**	6776 **172**
15	613 **285**	1498 **278**	2389 **269**	3283 **260**	4169 **251**	5040 **242**	5907 **232**	6765 **233**
20	448 **381**	1350 **373**	2245 **363**	3141 **353**	4031 **342**	4919 **331**	5798 **321**	6663 **310**
25	334 **477**	1158 **468**	2044 **457**	2941 **445**	3837 **433**	4729 **421**	5612 **409**	6500 **397**

Flow (GPM)

TORQUE (LB IN) 5612
SPEED (RPM) 409

■ Cont. □ Int.

Intermittent operation rating applies to 10% of every minute.

Fonctionnement interm. 10% max. de chaque minute d`utilisation.

Performance data based on testing using 10W40 oil with a viscosity of 200 SUS at 54° C (130° F.). Performance data is typical. Actual data may vary slightly from one production motor to another.

Les donnees sur les performances sont basees sur des tests utilisant de l'huile 10W40 d'une viscosite de 200 SUS a 54°C (130°F). Ces donnees correspondent a des situations typiques. Les donnees reelles peuvent varier legerement d'un moteur de production a l'autre.

Intermittierende Werte maximal 10% von jeder Betriebsminute.

Capacidad de funcionamiento intermitente valida para 10% por cada minuto.

Leistungsdaten sind gemessen mit SAE 10W40 bei einer Viskositaet von 43,1 Cst bei 54°C. Geringfuegige Abweichungen von den Katalogdaten sind moeglich.

Datos tecnicos obtenidos con aceite 10W40 de 200 SUS de viscosidad a 54°C (130°F). Los datos proporcionados son valores tipcos. Los valores exactos reales podrian tener una pequena variacion entre distintos motores.

WARNING
This product can expose you to chemicals including lead and DEHP, which are known to the State of California to cause cancer, and birth defects or other reproductive harm. For more information go to www.p65warnings.ca.gov

Tel: +45 63 12 83 00 | Email: ps@hymatik.com | www.hymatik.com | Hvidkaervej 27a, DK-5250 Odense SV, Denmark

TH 0240

14.5 cu in / rev

PRESSURE (PSID)

Flow (GPM)	500	1000	1500	2000	2500	3000	3500	4000
.5	932 **6**	1907 **4**	2894 **2**					
1	960 **14**	1954 **12**	2950 **9**	3943 **6**	4939 **3**	5930 **2**		
2	988 **30**	2031 **27**	3065 **24**	4090 **20**	5107 **17**	6100 **14**	7068 **11**	8037 **9**
3	983 **45**	2029 **42**	3071 **39**	4101 **35**	5128 **31**	6161 **27**	7182 **23**	8184 **20**
4	978 **61**	2037 **58**	3090 **54**	4136 **49**	5176 **45**	6207 **42**	7230 **37**	8234 **33**
5	962 **77**	2030 **73**	3092 **69**	4144 **64**	5190 **60**	6231 **56**	7259 **51**	8271 **47**
7	933 **108**	2005 **104**	3078 **99**	4141 **94**	5194 **89**	6239 **84**	7275 **78**	8298 **73**
9	890 **140**	1972 **135**	3048 **129**	4112 **123**	5169 **117**	6213 **112**	7245 **106**	8271 **100**
12	832 **187**	1912 **181**	2996 **175**	4071 **167**	5125 **161**	6163 **154**	7195 **147**	8224 **140**
15	753 **235**	1832 **228**	2921 **220**	4009 **212**	5081 **204**	6137 **196**	7182 **188**	8212 **180**
20	559 **314**	1654 **306**	2744 **297**	3834 **287**	4917 **278**	5991 **268**	7045 **258**	8081 **248**
25	524 **393**	1427 **384**	2507 **373**	3595 **363**	4690 **352**	5780 **340**	6853 **328**	7913 **317**

TORQUE (LB IN) 5780
SPEED (RPM) 340

■ Cont. □ Int.

Intermittent operation rating applies to 10% of every minute.

Fonctionnement interm. 10% max. de chaque minute d`utilisation.

Performance data based on testing using 10W40 oil with a viscosity of 200 SUS at 54° C (130° F.). Performance data is typical. Actual data may vary slightly from one production motor to another.

Les donnees sur les performances sont basees sur des tests utilisant de l'huile 10W40 d'une viscosite de 200 SUS a 54°C (130°F). Ces donnees correspondent a des situations typiques. Les donnees reelles peuvent varier legerement d'un moteur de production a l'autre.

Intermittierende Werte maximal 10% von jeder Betriebsminute.

Capacidad de funcionamiento intermitente valida para 10% por cada minuto.

Leistungsdaten sind gemessen mit SAE 10W40 bei einer Viskositaet von 43,1 Cst bei 54°C. Geringfuegige Abweichungen von den Katalogdaten sind moeglich.

Datos tecnicos obtenidos con aceite 10W40 de 200 SUS de viscosidad a 54°C (130°F). Los datos proporcionados son valores tipcos. Los valores exactos reales podrian tener una pequena variacion entre distintos motores.

WARNING
This product can expose you to chemicals including lead and DEHP, which are known to the State of California to cause cancer, and birth defects or other reproductive harm. For more information go to www.p65warnings.ca.gov

Tel: +45 63 12 83 00 | Email: ps@hymatik.com | www.hymatik.com | Hvidkaervej 27a, DK-5250 Odense SV, Denmark

TH 0280

17.1 cu in / rev

PRESSURE (PSID)

Flow (GPM)	500	1000	1500	2000	2500	3000	3500	4000
.5	1056 **5**	2177 **4**	3323 **2**	4512 **1**				
1	1087 **12**	2223 **10**	3378 **8**	4552 **6**	5734 **5**	6930 **3**	8135 **3**	9350 **2**
2	1124 **25**	2313 **23**	3513 **21**	4700 **18**	5880 **16**	7060 **14**	8239 **12**	9400 **11**
3	1124 **39**	2323 **36**	3532 **34**	4740 **31**	5940 **28**	7143 **25**	8346 **22**	9536 **19**
4	1126 **52**	2346 **49**	3568 **47**	4786 **43**	6004 **40**	7214 **37**	8415 **33**	9596 **30**
5	1115 **65**	2350 **62**	3582 **59**	4816 **56**	6044 **52**	7256 **49**	8457 **45**	9641 **41**
7	1091 **92**	2338 **88**	3586 **85**	4832 **80**	6072 **76**	7301 **72**	8515 **67**	9706 **63**
9	1046 **118**	2309 **114**	3564 **110**	4811 **105**	6051 **101**	7280 **96**	8499 **90**	9707 **85**
12	981 **159**	2242 **154**	3506 **148**	4757 **143**	5992 **137**	7221 **132**	8444 **125**	9652 **118**
15	898 **199**	2164 **193**	3437 **186**	4702 **180**	5951 **174**	7187 **168**	8416 **160**	9625 **152**
20	691 **266**	1976 **258**	3255 **250**	4529 **243**	5795 **235**	7044 **227**	8275 **218**	9499 **209**
25	703 **334**	1726 **324**	2987 **314**	4260 **305**	5540 **296**	6815 **286**	8071 **276**	9311 **267**

TORQUE (LB IN) 8071
SPEED (RPM) 276

■ Cont. □ Int.

Intermittent operation rating applies to 10% of every minute.

Fonctionnement interm. 10% max. de chaque minute d`utilisation.

Performance data based on testing using 10W40 oil with a viscosity of 200 SUS at 54° C (130° F.). Performance data is typical. Actual data may vary slightly from one production motor to another.

Les donnees sur les performances sont basees sur des tests utilisant de l'huile 10W40 d'une viscosite de 200 SUS a 54°C (130°F). Ces donnees correspondent a des situations typiques. Les donnees reelles peuvent varier legerement d'un moteur de production a l'autre.

Intermittierende Werte maximal 10% von jeder Betriebsminute.

Capacidad de funcionamiento intermitente valida para 10% por cada minuto.

Leistungsdaten sind gemessen mit SAE 10W40 bei einer Viskositaet von 43,1 Cst bei 54°C. Geringfuegige Abweichungen von den Katalogdaten sind moeglich.

Datos tecnicos obtenidos con aceite 10W40 de 200 SUS de viscosidad a 54°C (130°F). Los datos proporcionados son valores tipcos. Los valores exactos reales podrian tener una pequena variacion entre distintos motores.

WARNING
This product can expose you to chemicals including lead and DEHP, which are known to the State of California to cause cancer, and birth defects or other reproductive harm. For more information go to www.p65warnings.ca.gov

Tel: +45 63 12 83 00 | Email: ps@hymatik.com | www.hymatik.com | Hvidkaervej 27a, DK-5250 Odense SV, Denmark

TH 0310

18.9 cu in / rev

PRESSURE (PSID)

Flow (GPM)	500	1000	1500	2000	2500	3000	3500	4000
.5	1188 **4**	2464 **3**	3766 **2**	5102 **1**				
1	1220 **11**	2508 **9**	3812 **7**	5145 **5**	6477 **4**	7822 **2**	9181 **2**	10530 **1**
2	1259 **23**	2598 **21**	3950 **19**	5298 **17**	6642 **14**	7972 **13**	9282 **10**	10574 **9**
3	1257 **35**	2606 **33**	3889 **30**	5332 **28**	6688 **25**	8044 **22**	9392 **19**	10693 **16**
4	1259 **47**	2628 **44**	4003 **42**	5377 **39**	6749 **36**	8114 **33**	9461 **29**	10780 **26**
5	1247 **59**	2629 **56**	4252 **52**	5401 **50**	6782 **47**	8149 **42**	9499 **39**	10823 **35**
7	1218 **84**	2614 **80**	4013 **76**	5413 **72**	6806 **68**	8184 **64**	9543 **60**	10874 **56**
9	1167 **107**	2574 **103**	3983 **99**	5386 **94**	6780 **90**	8162 **85**	9529 **80**	10877 **75**
12	1089 **143**	2493 **139**	3904 **133**	5308 **128**	6696 **122**	8075 **117**	9443 **110**	10793 **102**
15	995 **180**	2400 **173**	3817 **167**	5225 **160**	6621 **154**	8003 **148**	9371 **140**	10718 **131**
20	769 **241**	2194 **234**	3618 **225**	5043 **218**	6462 **210**	7863 **203**	9238 **194**	10588 **183**
25	626 **303**	1955 **294**	3359 **284**	4771 **274**	6251 **265**	7608 **256**	8998 **246**	10360 **236**

TORQUE (LB IN) 7608
SPEED (RPM) 256

☒ Cont. ☐ Int.

Intermittent operation rating applies to 10% of every minute.

Fonctionnement interm. 10% max. de chaque minute d`utilisation.

Performance data based on testing using 10W40 oil with a viscosity of 200 SUS at 54° C (130° F.). Performance data is typical. Actual data may vary slightly from one production motor to another.

Les donnees sur les performances sont basees sur des tests utilisant de l'huile 10W40 d'une viscosite de 200 SUS a 54°C (130°F). Ces donnees correspondent a des situations typiques. Les donnees reelles peuvent varier legerement d'un moteur de production a l'autre.

Intermittierende Werte maximal 10% von jeder Betriebsminute.

Capacidad de funcionamiento intermitente valida para 10% por cada minuto.

Leistungsdaten sind gemessen mit SAE 10W40 bei einer Viskositaet von 43,1 Cst bei 54°C. Geringfuegige Abweichungen von den Katalogdaten sind moeglich.

Datos tecnicos obtenidos con aceite 10W40 de 200 SUS de viscosidad a 54°C (130°F). Los datos proporcionados son valores tipcos. Los valores exactos reales podrian tener una pequena variacion entre distintos motores.

⚠ **WARNING**
This product can expose you to chemicals including lead and DEHP, which are known to the State of California to cause cancer, and birth defects or other reproductive harm. For more information go to www.p65warnings.ca.gov

Tel: +45 63 12 83 00 | Email: ps@hymatik.com | www.hymatik.com | Hvidkaervej 27a, DK-5250 Odense SV, Denmark

TH 0335

20.6 cu in / rev

PRESSURE (PSID)

Flow (GPM)	500	1000	1500	2000	2500	3000	3500	4000
.5	1297 **4**	2699 **3**	4128 **1**	5584 **1**				
1	1329 **10**	2741 **8**	4176 **7**	5630 **5**	7084 **4**	8551 **2**	10036 **2**	11496 **1**
2	1369 **21**	2832 **19**	4308 **17**	5787 **15**	7265 **13**	8718 **11**	10136 **9**	11534 **8**
3	1366 **32**	2838 **30**	4326 **27**	5817 **25**	7301 **22**	8781 **20**	10248 **17**	11685 **14**
4	1368 **43**	2858 **40**	4358 **38**	5861 **35**	7358 **32**	8850 **29**	10317 **25**	11748 **22**
5	1355 **54**	2858 **51**	4368 **48**	5880 **45**	7386 **42**	8880 **38**	10352 **34**	11791 **30**
7	1323 **76**	2840 **73**	4363 **69**	5888 **65**	7407 **61**	8908 **57**	10384 **53**	11829 **47**
9	1266 **98**	2791 **94**	4326 **90**	5856 **85**	7376 **81**	8884 **76**	10372 **71**	11834 **64**
12	1177 **131**	2698 **127**	4230 **121**	5759 **116**	7273 **110**	8773 **105**	10261 **98**	11726 **90**
15	1075 **165**	2594 **159**	4127 **153**	5654 **146**	7170 **140**	8670 **134**	10153 **126**	11613 **116**
20	833 **221**	2372 **214**	3915 **205**	5463 **197**	7008 **189**	8533 **182**	10026 **173**	11479 **161**
25	678 **277**	2142 **269**	3663 **259**	5189 **248**	6726 **239**	8257 **230**	9757 **219**	11219 **209**

TORQUE (LB IN) 9757
SPEED (RPM) 219

☒ Cont. ☐ Int.

Intermittent operation rating applies to 10% of every minute.

Fonctionnement interm. 10% max. de chaque minute d`utilisation.

Performance data based on testing using 10W40 oil with a viscosity of 200 SUS at 54° C (130° F.). Performance data is typical. Actual data may vary slightly from one production motor to another.

Les donnees sur les performances sont basees sur des tests utilisant de l'huile 10W40 d'une viscosite de 200 SUS a 54°C (130°F). Ces donnees correspondent a des situations typiques. Les donnees reelles peuvent varier legerement d'un moteur de production a l'autre.

Intermittierende Werte maximal 10% von jeder Betriebsminute.

Capacidad de funcionamiento intermitente valida para 10% por cada minuto.

Leistungsdaten sind gemessen mit SAE 10W40 bei einer Viskositaet von 43,1 Cst bei 54°C. Geringfuegige Abweichungen von den Katalogdaten sind moeglich.

Datos tecnicos obtenidos con aceite 10W40 de 200 SUS de viscosidad a 54°C (130°F). Los datos proporcionados son valores tipcos. Los valores exactos reales podrian tener una pequena variacion entre distintos motores.

WARNING
This product can expose you to chemicals including lead and DEHP, which are known to the State of California to cause cancer, and birth defects or other reproductive harm. For more information go to www.p65warnings.ca.gov

Tel: +45 63 12 83 00 | Email: ps@hymatik.com | www.hymatik.com | Hvidkaervej 27a, DK-5250 Odense SV, Denmark

TH 0360

360 cm³ / rev (22.2 in³ / rev)

PRESSURE (PSID)

Flow (GPM)	500	1000	1500	2000	2500	3000	3500
.5	1386 **4**	2883 **3**	4410 **1**	5965 **1**			
1	1420 **9**	2928 **7**	4461 **7**	6014 **5**	7567 **4**	9135 **2**	10721 **2**
2	1462 **20**	3025 **18**	4602 **16**	6182 **14**	7761 **12**	9313 **10**	10828 **8**
3	1459 **30**	3031 **28**	4621 **25**	6214 **23**	7799 **21**	9380 **19**	10947 **16**
4	1461 **40**	3053 **37**	4655 **36**	6261 **33**	7884 **30**	9454 **27**	11021 **23**
5	1447 **51**	3053 **48**	4666 **45**	6281 **42**	7890 **39**	9486 **36**	11059 **32**
7	1413 **71**	3034 **68**	4661 **65**	6290 **61**	7913 **57**	9516 **53**	11093 **50**
9	1352 **92**	2981 **88**	4621 **84**	6256 **80**	7879 **76**	9490 **71**	11080 **66**
12	1257 **123**	2882 **119**	4519 **113**	6152 **109**	7769 **103**	9372 **98**	10961 **92**
15	1148 **154**	2771 **149**	4409 **143**	6040 **137**	7659 **131**	9262 **125**	10846 **118**
20	890 **207**	2534 **200**	4182 **192**	5836 **184**	7486 **177**	9115 **170**	10710 **162**
25	724 **259**	2288 **252**	3913 **242**	5543 **232**	7185 **224**	8821 **215**	10423 **205**

TORQUE (LB IN) 8821
SPEED (RPM) 215

☒ Cont. ☐ Int.

Intermittent operation rating applies to 10% of every minute.

Fonctionnement interm. 10% max. de chaque minute d`utilisation.

Performance data based on testing using 10W40 oil with a viscosity of 200 SUS at 54° C (130° F.). Performance data is typical. Actual data may vary slightly from one production motor to another.

Les donnees sur les performances sont basees sur des tests utilisant de l'huile 10W40 d'une viscosite de 200 SUS a 54°C (130°F). Ces donnees correspondent a des situations typiques. Les donnees reelles peuvent varier legerement d'un moteur de production a l'autre.

Intermittierende Werte maximal 10% von jeder Betriebsminute.

Capacidad de funcionamiento intermitente valida para 10% por cada minuto.

Leistungsdaten sind gemessen mit SAE 10W40 bei einer Viskositaet von 43,1 Cst bei 54°C. Geringfuegige Abweichungen von den Katalogdaten sind moeglich.

Datos tecnicos obtenidos con aceite 10W40 de 200 SUS de viscosidad a 54°C (130°F). Los datos proporcionados son valores tipcos. Los valores exactos reales podrian tener una pequena variacion entre distintos motores.

WARNING
This product can expose you to chemicals including lead and DEHP, which are known to the State of California to cause cancer, and birth defects or other reproductive harm. For more information go to www.p65warnings.ca.gov

Tel: +45 63 12 83 00 | Email: ps@hymatik.com | www.hymatik.com | Hvidkaervej 27a, DK-5250 Odense SV, Denmark

TH 0405

24.7 cu in / rev

PRESSURE (PSID)

Flow (GPM)	500	1000	1500	2000	2500	3000	3500
.5	1544 **4**	3178 **3**	4840 **2**	6515 **1**	8185 **1**		
1	1593 **8**	3256 **7**	4928 **6**	6607 **6**	8303 **5**	9987 **4**	11652 **3**
2	1636 **17**	3351 **16**	5084 **15**	6817 **14**	8550 **13**	10272 **12**	11978 **11**
3	1637 **27**	3365 **25**	5106 **23**	6847 **22**	8588 **21**	10314 **19**	12031 **18**
4	1645 **36**	3394 **34**	5159 **32**	6920 **30**	8668 **29**	10402 **27**	12130 **26**
5	1640 **45**	3408 **43**	5201 **41**	6983 **39**	8733 **37**	10466 **35**	12194 **33**
7	1606 **64**	3396 **61**	5211 **59**	7003 **56**	8772 **54**	10527 **51**	12271 **49**
9	1551 **82**	3350 **80**	5176 **77**	6981 **73**	8763 **70**	10519 **67**	12269 **64**
12	1428 **110**	3238 **107**	5075 **103**	6888 **99**	8670 **95**	10424 **91**	12172 **88**
15	1310 **138**	3112 **135**	4948 **130**	6759 **125**	8545 **120**	10306 **115**	12060 **111**
20	1136 **185**	2862 **181**	4692 **175**	6518 **168**	8336 **162**	10122 **156**	11877 **151**
25			4492 **219**	6303 **212**	8084 **204**	9848 **197**	11585 **190**

TORQUE (LB IN)
SPEED (RPM)

Cont. Int.

Intermittent operation rating applies to 10% of every minute.

Fonctionnement interm. 10% max. de chaque minute d`utilisation.

Performance data based on testing using 10W40 oil with a viscosity of 200 SUS at 54° C (130° F.). Performance data is typical. Actual data may vary slightly from one production motor to another.

Les donnees sur les performances sont basees sur des tests utilisant de l'huile 10W40 d'une viscosite de 200 SUS a 54°C (130°F). Ces donnees correspondent a des situations typiques. Les donnees reelles peuvent varier legerement d'un moteur de production a l'autre.

Intermittierende Werte maximal 10% von jeder Betriebsminute.

Capacidad de funcionamiento intermitente valida para 10% por cada minuto.

Leistungsdaten sind gemessen mit SAE 10W40 bei einer Viskositaet von 43,1 Cst bei 54°C. Geringfuegige Abweichungen von den Katalogdaten sind moeglich.

Datos tecnicos obtenidos con aceite 10W40 de 200 SUS de viscosidad a 54°C (130°F). Los datos proporcionados son valores tipcos. Los valores exactos reales podrian tener una pequena variacion entre distintos motores.

WARNING
This product can expose you to chemicals including lead and DEHP, which are known to the State of California to cause cancer, and birth defects or other reproductive harm. For more information go to www.p65warnings.ca.gov

Tel: +45 63 12 83 00 | Email: ps@hymatik.com | www.hymatik.com | Hvidkaervej 27a, DK-5250 Odense SV, Denmark

TH 0475

29.1 cu in / rev

PRESSURE (PSID)

Flow (GPM)	500	1000	1500	2000	2500	3000
.5	1768 **3**	3732 **3**	5733 **2**	7744 **1**	9762 **1**	
1	1868 **7**	3878 **7**	5879 **6**	7851 **5**	9838 **4**	11830 **3**
2	1964 **15**	4055 **14**	6180 **14**	8237 **12**	10241 **10**	12136 **8**
3	1972 **23**	4074 **22**	6208 **21**	8321 **19**	10379 **17**	12355 **13**
4	2005 **31**	4135 **30**	6287 **29**	8382 **27**	10463 **24**	12496 **20**
5	2004 **39**	4129 **38**	6304 **37**	8428 **34**	10514 **31**	12544 **26**
7	1990 **55**	4133 **54**	6308 **52**	8445 **50**	10555 **45**	12602 **40**
9	1924 **70**	4104 **69**	6285 **68**	8430 **65**	10528 **60**	12608 **54**
12	1775 **94**	3974 **93**	6157 **91**	8328 **87**	10446 **82**	12528 **75**
15	1619 **118**	3784 **116**	5990 **114**	8188 **110**	10311 **104**	12372 **96**
20	1314 **157**	3373 **156**	5629 **153**	7853 **149**	10038 **141**	12145 **132**
25	1141 **197**	3029 **196**	5220 **193**	7427 **189**	9629 **182**	11757 **174**
30	606 **237**	2505 **236**	4649 **233**	6766 **230**	8878 **224**	10989 **219**

TORQUE (LB IN) 6766
SPEED (RPM) 230

☒ Cont. ☐ Int.

Intermittent operation rating applies to 10% of every minute.

Fonctionnement interm. 10% max. de chaque minute d`utilisation.

Performance data based on testing using 10W40 oil with a viscosity of 200 SUS at 54° C (130° F.). Performance data is typical. Actual data may vary slightly from one production motor to another.

Les donnees sur les performances sont basees sur des tests utilisant de l'huile 10W40 d'une viscosite de 200 SUS a 54°C (130°F). Ces donnees correspondent a des situations typiques. Les donnees reelles peuvent varier legerement d'un moteur de production a l'autre.

Intermittierende Werte maximal 10% von jeder Betriebsminute.

Capacidad de funcionamiento intermitente valida para 10% por cada minuto.

Leistungsdaten sind gemessen mit SAE 10W40 bei einer Viskositaet von 43,1 Cst bei 54°C. Geringfuegige Abweichungen von den Katalogdaten sind moeglich.

Datos tecnicos obtenidos con aceite 10W40 de 200 SUS de viscosidad a 54°C (130°F). Los datos proporcionados son valores tipcos. Los valores exactos reales podrian tener una pequena variacion entre distintos motores.

WARNING
This product can expose you to chemicals including lead and DEHP, which are known to the State of California to cause cancer, and birth defects or other reproductive harm. For more information go to www.p65warnings.ca.gov

Tel: +45 63 12 83 00 | Email: ps@hymatik.com | www.hymatik.com | Hvidkaervej 27a, DK-5250 Odense SV, Denmark

TH 0530

32.2 cu in / rev

Flow (GPM)	PRESSURE (PSID) 500	1000	1500	2000	2500
.5	2080 **3**	4256 **3**	6479 **2**	8726 **2**	11012 **1**
1	2158 **7**	4372 **6**	6592 **6**	8779 **5**	10994 **4**
2	2246 **14**	4567 **13**	6869 **12**	9126 **11**	11376 **9**
3	2242 **21**	4578 **20**	6916 **19**	9237 **17**	11500 **14**
4	2253 **28**	4625 **27**	6977 **25**	9296 **23**	11586 **20**
5	2235 **35**	4629 **34**	7002 **32**	9333 **29**	11626 **26**
7	2182 **49**	4599 **48**	7006 **46**	9362 **42**	11659 **38**
9	2095 **63**	4535 **62**	6960 **59**	9330 **55**	11650 **50**
12	1943 **85**	4390 **83**	6825 **80**	9217 **75**	11549 **69**
15	1753 **106**	4199 **104**	6638 **100**	9052 **95**	11408 **87**
20	1327 **141**	3783 **139**	6262 **135**	8701 **129**	11086 **120**
25	1011 **177**	3300 **175**	5751 **171**	8210 **165**	10639 **158**
30	269 **213**	2698 **211**	5083 **208**	7415 **203**	9814 **197**

TORQUE (LB IN) 9814
SPEED (RPM) 197

☒ Cont. ☐ Int.

Intermittent operation rating applies to 10% of every minute.

Fonctionnement interm. 10% max. de chaque minute d`utilisation.

Performance data based on testing using 10W40 oil with a viscosity of 200 SUS at 54° C (130° F.). Performance data is typical. Actual data may vary slightly from one production motor to another.

Les donnees sur les performances sont basees sur des tests utilisant de l'huile 10W40 d'une viscosite de 200 SUS a 54°C (130°F). Ces donnees correspondent a des situations typiques. Les donnees reelles peuvent varier legerement d'un moteur de production a l'autre.

Intermittierende Werte maximal 10% von jeder Betriebsminute.

Capacidad de funcionamiento intermitente valida para 10% por cada minuto.

Leistungsdaten sind gemessen mit SAE 10W40 bei einer Viskositaet von 43,1 Cst bei 54°C. Geringfuegige Abweichungen von den Katalogdaten sind moeglich.

Datos tecnicos obtenidos con aceite 10W40 de 200 SUS de viscosidad a 54°C (130°F). Los datos proporcionados son valores tipcos. Los valores exactos reales podrian tener una pequena variacion entre distintos motores.

⚠ **WARNING**
This product can expose you to chemicals including lead and DEHP, which are known to the State of California to cause cancer, and birth defects or other reproductive harm. For more information go to www.p65warnings.ca.gov

Tel: +45 63 12 83 00 | Email: ps@hymatik.com | www.hymatik.com | Hvidkaervej 27a, DK-5250 Odense SV, Denmark

TH 0625

38.0 cu in / rev

Flow (GPM)	PRESSURE (PSID) 500	1000	1500	1750	2250
.5	1939 **2**	4593 **1**			
1	2087 **5**	4665 **3**	7283 **2**	8680 **2**	11579 **1**
2	2338 **11**	4991 **9**	7590 **8**	8853 **7**	11458 **5**
3	2386 **17**	5101 **15**	7753 **13**	9055 **12**	11689 **9**
4	2457 **23**	5202 **21**	7872 **19**	9174 **17**	11769 **14**
5	2479 **29**	5246 **27**	7943 **25**	9242 **23**	11821 **18**
7	2464 **41**	5273 **39**	7995 **36**	9306 **34**	11859 **28**
9	2401 **53**	5223 **51**	7993 **48**	9337 **45**	11935 **39**
12	2254 **71**	5092 **69**	7886 **65**	9239 **62**	11900 **54**
15	2052 **89**	4901 **87**	7721 **83**	9086 **80**	11763 **70**
20	1600 **120**	4490 **117**	7334 **112**	8725 **109**	11424 **98**
25	1063 **151**	3933 **148**	6818 **144**	8235 **140**	11021 **131**
30	359 **182**	3250 **180**	6074 **176**	7443 **172**	10179 **165**

TORQUE (LB IN) 7443
SPEED (RPM) 172

☐ Cont. ☐ Int.

Intermittent operation rating applies to 10% of every minute.

Fonctionnement interm. 10% max. de chaque minute d`utilisation.

Performance data based on testing using 10W40 oil with a viscosity of 200 SUS at 54° C (130° F.). Performance data is typical. Actual data may vary slightly from one production motor to another.

Les donnees sur les performances sont basees sur des tests utilisant de l'huile 10W40 d'une viscosite de 200 SUS a 54°C (130°F). Ces donnees correspondent a des situations typiques. Les donnees reelles peuvent varier legerement d'un moteur de production a l'autre.

Intermittierende Werte maximal 10% von jeder Betriebsminute.

Capacidad de funcionamiento intermitente valida para 10% por cada minuto.

Leistungsdaten sind gemessen mit SAE 10W40 bei einer Viskositaet von 43,1 Cst bei 54°C. Geringfuegige Abweichungen von den Katalogdaten sind moeglich.

Datos tecnicos obtenidos con aceite 10W40 de 200 SUS de viscosidad a 54°C (130°F). Los datos proporcionados son valores tipcos. Los valores exactos reales podrian tener una pequena variacion entre distintos motores.

WARNING
This product can expose you to chemicals including lead and DEHP, which are known to the State of California to cause cancer, and birth defects or other reproductive harm. For more information go to www.p65warnings.ca.gov

Tel: +45 63 12 83 00 | Email: ps@hymatik.com | www.hymatik.com | Hvidkaervej 27a, DK-5250 Odense SV, Denmark

TH 0785

48.0 cu in / rev

PRESSURE (PSID)

Flow (GPM)	500	1000	1500	2000
.5	2910 **2**	6153 **2**	9607 **1**	12950 **1**
1	3011 **4**	6296 **4**	9670 **3**	12919 **3**
2	3217 **9**	6536 **8**	9935 **7**	13060 **6**
3	3220 **14**	6613 **13**	9977 **11**	13079 **9**
4	3265 **19**	6679 **17**	10021 **15**	13078 **13**
5	3263 **23**	6703 **22**	10047 **19**	13103 **16**
7	3218 **33**	6722 **31**	10068 **28**	13062 **24**
9	3107 **43**	6664 **41**	10108 **36**	13185 **31**
12	2892 **57**	6489 **55**	9959 **49**	13082 **42**
15	2643 **71**	6238 **69**	9733 **62**	12938 **54**
20	2044 **95**	5673 **92**	9239 **85**	12636 **75**
25	2313 **119**	4976 **117**	8571 **110**	12073 **101**
30	496 **143**	4104 **141**	7582 **137**	11024 **130**

TORQUE (LB IN) 11024
SPEED (RPM) 130

TH 0960

58.5 cu in / rev

PRESSURE (PSID)

Flow (GPM)	500	1000	1500
.5	3692 **2**	7712 **1**	11750 **1**
1	3788 **3**	7858 **3**	11895 **3**
2	3900 **7**	8045 **7**	12058 **6**
3	3905 **11**	8078 **11**	12135 **10**
4	3939 **15**	8155 **14**	12210 **13**
5	3923 **19**	8173 **18**	12238 **17**
7	3860 **27**	8160 **26**	12262 **24**
9	3733 **35**	8074 **34**	12224 **31**
12	3475 **47**	7848 **45**	12062 **42**
15	3149 **58**	7545 **57**	11823 **53**
20	2437 **78**	6843 **76**	11227 **72**
25	2969 **98**	5990 **96**	10360 **92**
30	603 **118**	4919 **117**	9170 **113**

TORQUE (LB IN) 9170
SPEED (RPM) 113

■ Cont. □ Int.

Intermittent operation rating applies to 10% of every minute.

Fonctionnement interm. 10% max. de chaque minute d`utilisation.

Performance data based on testing using 10W40 oil with a viscosity of 200 SUS at 54° C (130° F.). Performance data is typical. Actual data may vary slightly from one production motor to another.

Les donnees sur les performances sont basees sur des tests utilisant de l'huile 10W40 d'une viscosite de 200 SUS a 54°C (130°F). Ces donnees correspondent a des situations typiques. Les donnees reelles peuvent varier legerement d'un moteur de production a l'autre.

Intermittierende Werte maximal 10% von jeder Betriebsminute.

Capacidad de funcionamiento intermitente valida para 10% por cada minuto.

Leistungsdaten sind gemessen mit SAE 10W40 bei einer Viskositaet von 43,1 Cst bei 54°C. Geringfuegige Abweichungen von den Katalogdaten sind moeglich.

Datos tecnicos obtenidos con aceite 10W40 de 200 SUS de viscosidad a 54°C (130°F). Los datos proporcionados son valores tipcos. Los valores exactos reales podrian tener una pequena variacion entre distintos motores.

WARNING
This product can expose you to chemicals including lead and DEHP, which are known to the State of California to cause cancer, and birth defects or other reproductive harm. For more information go to www.p65warnings.ca.gov

Tel: +45 63 12 83 00 | Email: ps@hymatik.com | www.hymatik.com | Hvidkaervej 27a, DK-5250 Odense SV, Denmark

Flange Mount / Standardgehäuse
Monture à bride(s) / Montaje de brida

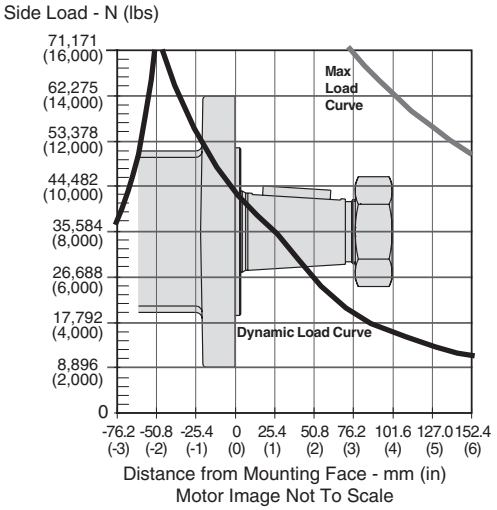

The dynamic side load curve is based on uni-directional steady state loads for L_{10} bearing life at 6 x 10^6 revolutions.
Die zulässige auslegbare radiale Wellenbelastungskurve ist unter ruhenden, einseitig statisch gerichteten Lastverhältnissen auf eine L_{10} Lebensdauer mit 6 x 10^6 Umdrehungen kalkuliert.
La courbe de charge latérale permise se base sur des charges unidirectionnelles en régime permanent pour le roulement L_{10} à 6 x 10^6 révolutions.
La curva de valores admisibles de carga lateral está basada en cargas constantes para cojinetes L_{10} a 6 x 10^6 revoluciones.

Wheel Mount / Radnabengehäuse
Monture à roue / Montaje de rueda

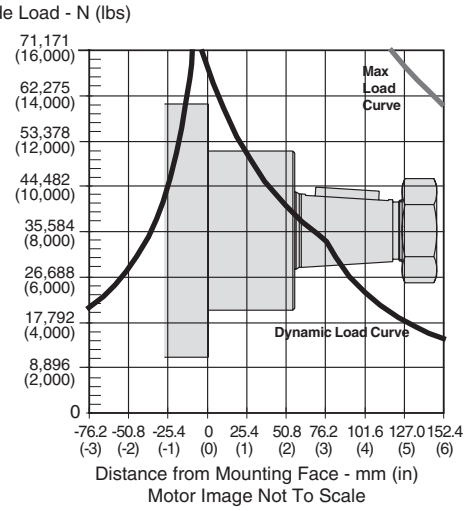

The maximum load curve is defined by bearing static load capacity. This curve should not be exceeded at any time including shock loads.
Die maximale radiale Wellenbelastungskurve ist definiert als maximale statische Last ohne Drehzahl. Sie gilt als Grenze und sollte keinesfalls überschritten werden.
La courbe de charge maximale est définie par la capacité de charge statique portante. Cette courbe ne devrait être dépassée en aucun moment y compris pour les charges par à-coups.
La curva de carga máxima queda definida por la capacidad de carga estática del cojinete. No se deben superar los valores de esta curva, ni siquiera con cargas provisorias de impacto.

Equation to Calculate the Expected Radial Bearing Life
Gleichung zur Ermittlung der Lagerlebensdauer

Equation to calculate the dynamic bearing life for a given load:
Bestimmung der erlaubten radialen Wellenbelastung mit vorgegebener Last

Use F_a, F_b and S in equation to determine hours of L_{10} bearing life.
Die Lebensdauer in Stunden ergibt sich durch einsetzen von F_a, F_b, und S in die nachstehende Formel.

$$L = \frac{6 \times 10^6}{60 \times S} \left\{ \frac{F_a}{F_b} \right\}^{3.33}$$

Where / Mit:

S = Shaft Speed RPM / Abtriebswellendrehzahl in min^{-1}
L = Life In Hours / Lebensdauer in Stunden
F_a = Dynamic side load defined by above curve at a distance from mounting flange. / Erlaubte radiale Wellenbelastung als Function der Laenge
F_b = Application side load. / Anwendungsseitige Wellenbelastung

Note: Calculations are based on L_{10} bearing life per ISO 281.
Auslegung basiert auf einer L_{10} Lenbendauer nach ISO 281.

WARNING
This product can expose you to chemicals including lead and DEHP, which are known to the State of California to cause cancer, and birth defects or other reproductive harm. For more information go to www.p65warnings.ca.gov

Tel: +45 63 12 83 00 | Email: ps@hymatik.com | www.hymatik.com | Hvidkaervej 27a, DK-5250 Odense SV, Denmark

Code: MS

Magneto, 7/8-14 SAE O-Ring

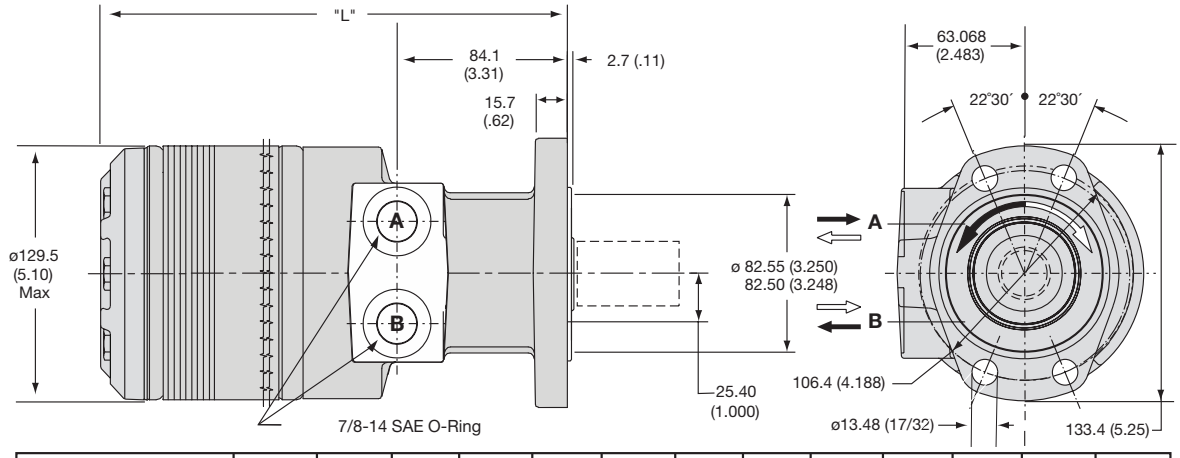

Code MS disp.	0140	0170	0195	0240	0280	0310	0335	0405	0475	0530	0625	0785	0960
Weight/Gewicht kg	**14.7**	**14.9**	**15.2**	**15.5**	**15.9**	**16.3**	**16.1**	**16.9**	**17.6**	**18.3**	**19.0**	**20.6**	**22.3**
Poids/Peso (lb)	(32.3)	(32.8)	(33.4)	(34.2)	(35.1)	(35.9)	(35.4)	(37.3)	(38.7)	(40.4)	(41.9)	(45.4)	(49.1)
Length "L" mm	**215.9**	**218.9**	**222.3**	**227.1**	**231.6**	**238.0**	**235.0**	**245.4**	**254.0**	**260.4**	**269.7**	**288.8**	**307.8**
"L" (in)	(8.50)	(8.62)	(8.75)	(8.94)	(9.12)	(9.37)	(9.25)	(9.66)	(10.00)	(10.25)	(10.62)	(11.37)	(12.12)

Code: US

Wheel, Standard, 7/8-14 SAE O-Ring

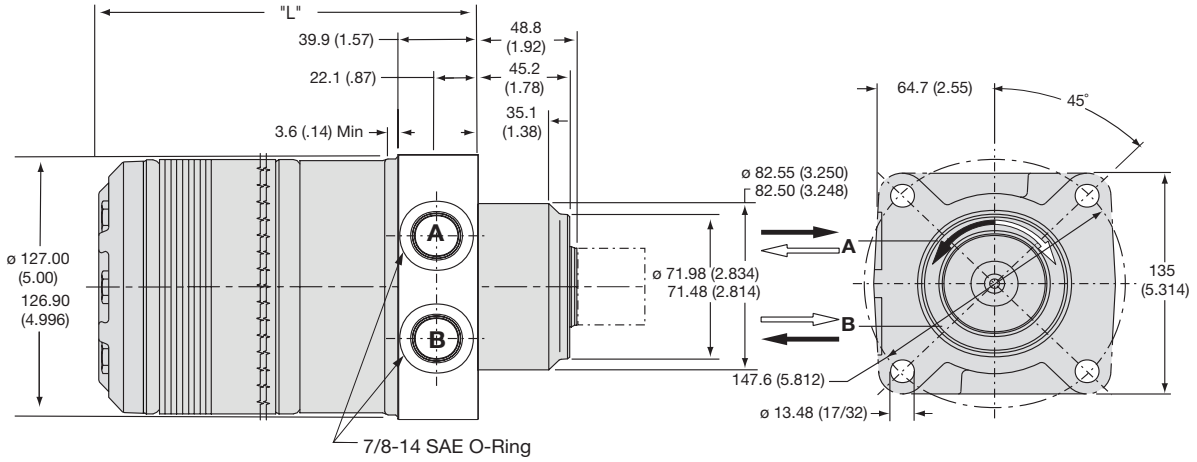

Code US disp.	0140	0170	0195	0240	0280	0310	0335	0405	0475	0530	0625	0785	0960
Weight/Gewicht kg	**16.9**	**17.2**	**17.4**	**17.8**	**18.2**	**18.4**	**18.6**	**19.2**	**19.8**	**20.6**	**21.3**	**22.9**	**24.5**
Poids/Peso (lb)	(37.3)	(37.8)	(38.4)	(39.2)	(40.1)	(40.5)	(40.9)	(42.3)	(43.7)	(45.4)	(46.9)	(50.4)	(54.1)
Length "L" mm	**173.2**	**176.5**	**179.6**	**184.4**	**189.2**	**191.8**	**195.6**	**202.9**	**211.3**	**217.7**	**227.3**	**246.4**	**265.4**
"L" (in)	(6.82)	(6.95)	(7.07)	(7.26)	(7.45)	(7.55)	(7.70)	(7.99)	(8.32)	(8.57)	(8.95)	(9.70)	(10.45)

English equivalents for metric specifications are shown in ( ).

WARNING
This product can expose you to chemicals including lead and DEHP, which are known to the State of California to cause cancer, and birth defects or other reproductive harm. For more information go to www.p65warnings.ca.gov

Tel: +45 63 12 83 00 | Email: ps@hymatik.com | www.hymatik.com | Hvidkaervej 27a, DK-5250 Odense SV, Denmark

Code: PB

SAE "B" 4 Bolt, Rear 7/8-14 SAE O-Ring Radial

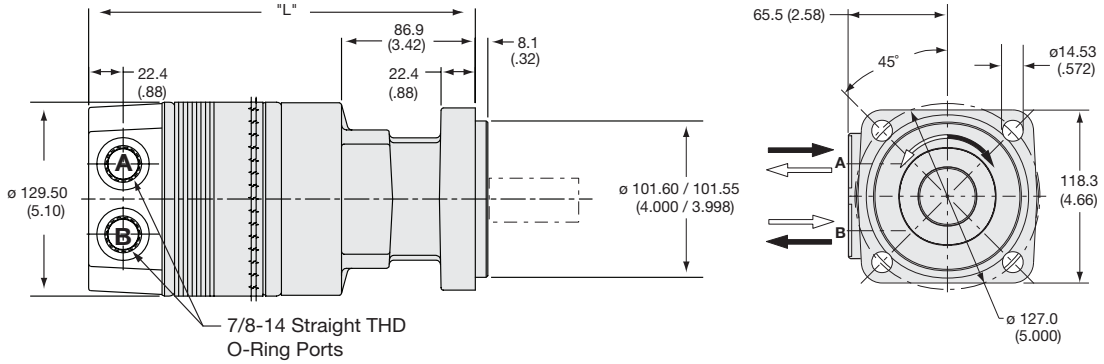

Code PB disp.	0140	0170	0195	0240	0280	0310	0335	0405	0475	0530	0625	0785	0960
Weight/Gewicht kg	**16.9**	**17.2**	**17.4**	**17.8**	**18.2**	**18.4**	**18.6**	**19.2**	**19.8**	**20.6**	**21.3**	**22.9**	**24.5**
Poids/Peso (lb)	(37.3)	(37.8)	(38.4)	(39.2)	(40.1)	(40.5)	(40.9)	(42.3)	(43.7)	(45.4)	(46.9)	(50.4)	(54.1)
Length "L" mm	**235.2**	**238.3**	**241.6**	**246.4**	**251.0**	**254.0**	**257.3**	**264.9**	**273.3**	**279.7**	**289.3**	**308.4**	**327.4**
"L" (in)	(9.26)	(9.38)	(9.51)	(9.70)	(9.88)	(10.0)	(10.13)	(10.43)	(10.76)	(11.01)	(11.39)	(12.14)	(12.89)

Code: KB

SAE CC 4 Bolt, Rear 7/8-14 SAE O-Ring Radial

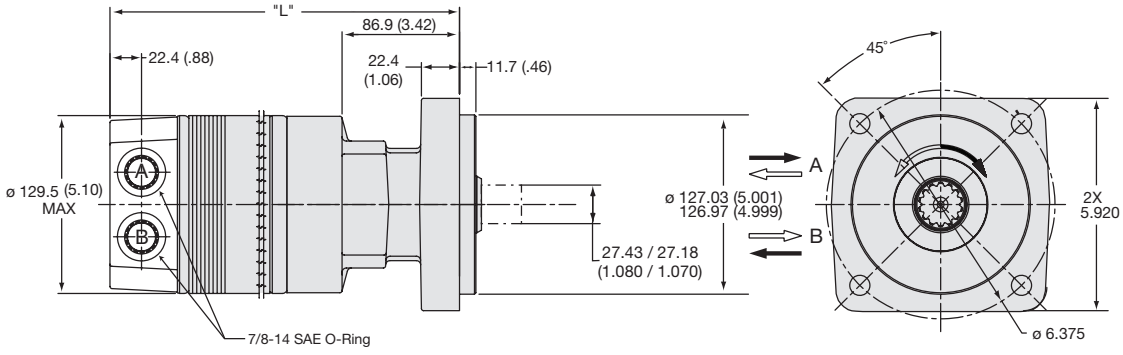

Code KB disp	0140	0170	0195	0240	0280	0310	0335	0405	0475	0530	0625	0785	0960
Weight/Gewicht kg	**19.4**	**19.4**	**19.9**	**20.3**	**20.7**	**20.9**	**21.0**	**21.7**	**22.3**	**23.1**	**23.8**	**25.4**	**27.0**
Poids/Peso (lb)	(42.8)	(43.3)	(43.9)	(44.7)	(45.6)	(46.0)	(46.4)	(47.8)	(49.2)	(50.9)	(52.4)	(55.9)	(59.6)
Length "L" mm	**231.9**	**235.2**	**238.3**	**243.1**	**247.9**	**251.0**	**254.3**	**261.6**	**270.0**	**276.4**	**286.0**	**305.1**	**324.1**
(in)	(9.13)	(9.26)	(9.38)	(9.57)	(9.76)	(9.88)	(10.01)	(10.3)	(10.63)	(10.88)	(11.26)	(12.01)	(12.76)

English equivalents for metric specifications are shown in ( ).

WARNING
This product can expose you to chemicals including lead and DEHP, which are known to the State of California to cause cancer, and birth defects or other reproductive harm. For more information go to www.p65warnings.ca.gov

Tel: +45 63 12 83 00 | Email: ps@hymatik.com | www.hymatik.com | Hvidkaervej 27a, DK-5250 Odense SV, Denmark

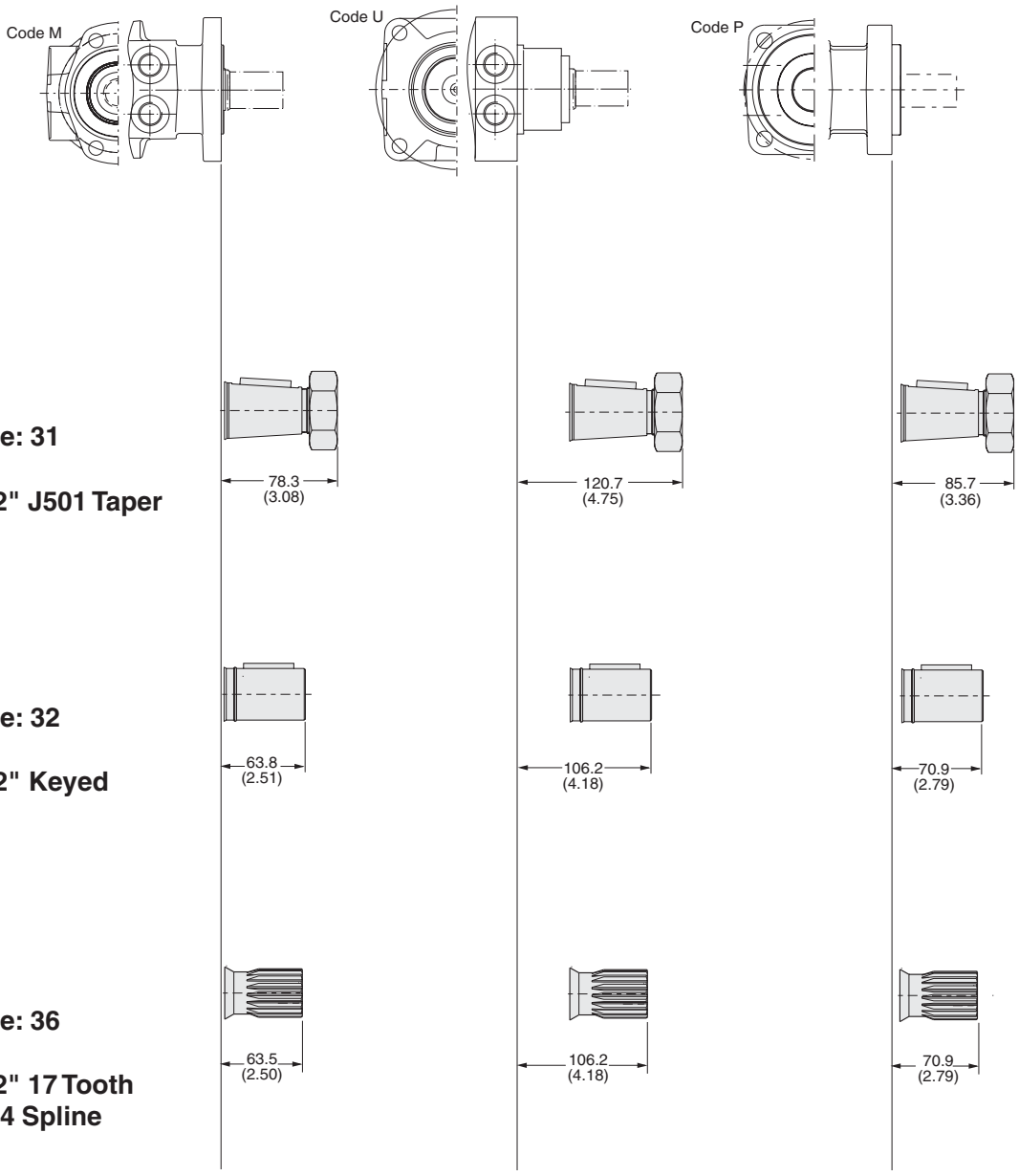

English equivalents for metric specifications are shown in ( ).

014 TH.indd, b

WARNING
This product can expose you to chemicals including lead and DEHP, which are known to the State of California to cause cancer, and birth defects or other reproductive harm. For more information go to www.p65warnings.ca.gov

Tel: +45 63 12 83 00 | Email: ps@hymatik.com | www.hymatik.com | Hvidkaervej 27a, DK-5250 Odense SV, Denmark

Code: 31

1 1/2" J501 Taper

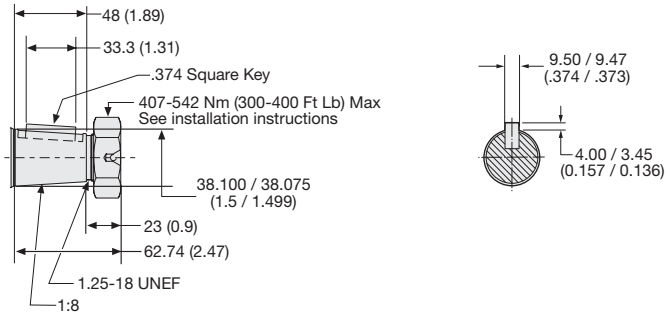

Code: 32

1 1/2" Keyed

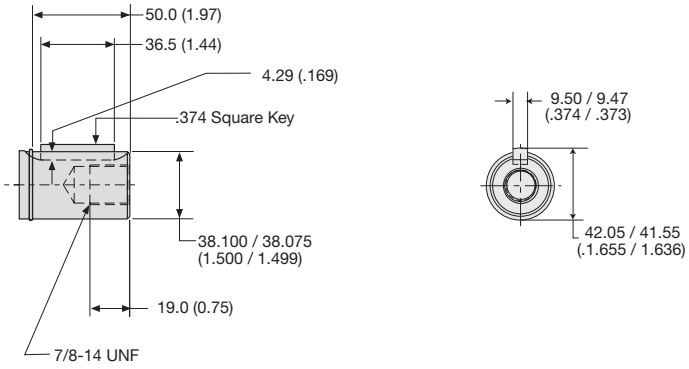

Code: 36

1 1/2" 17 Tooth
12/24 Spline

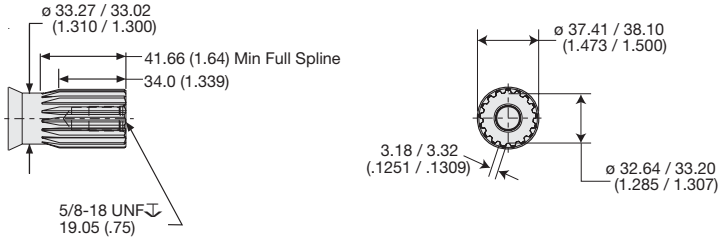

English equivalents for metric specifications are shown in ( ).

WARNING
This product can expose you to chemicals including lead and DEHP, which are known to the State of California to cause cancer, and birth defects or other reproductive harm. For more information go to www.p65warnings.ca.gov

Tel: +45 63 12 83 00 | Email: ps@hymatik.com | www.hymatik.com | Hvidkaervej 27a, DK-5250 Odense SV, Denmark

13 Displacements	(8.6 to 58.5 in3/rev)
13 Schluckvolumen	**141 . . . 959 cm³/rev**
13 Cylindrée	
13 Despazamientos	

	Cont.	Int.
Maximum Pressure	(3000 psid)	(4000 psid)
Eingangsdruck	**. . . 207 bar**	**. . . 276 bar**
Pression entrée		
Presion Maxima		

Maximum Oil Flow	(30 gpm)
Schluckstrom	**. . . 114 lpm**
Débit d'huile	
Caudal Maximo de Aceite	

Maximum Speed	(660 rpm)
Drehzahl	**660 rpm**
Vitesse de rotation	
Velocidad Maxima	

	Cont.	Int.
Maximum Torque	(9,239 lb in)	(12,636 lb in)
MaxDrehmoment	**1044 Nm**	**1428 Nm**
Couple		
Torque Maximo		

Maximum Side Load at Key	(4790 lb)
Seitenlast	**. . . 21306 N**
Charges latèrales	
Carga Maxima Lateral	

⚠ CAUTION!
See installation/operating instructions for product cautions and proper use.

Exceptional Strength and Durability in a High Performance Motor/Brake Package

This brake motor consists of a BH Series motor integrated into a wet disc, spring applied, hydraulically released brake. Standard holding capacity is 16,000 lb in of holding torque. The brake is front mounted for reliable operation even in the event of a system failure. The brake release port is capable of pressures to 3000 PSI.

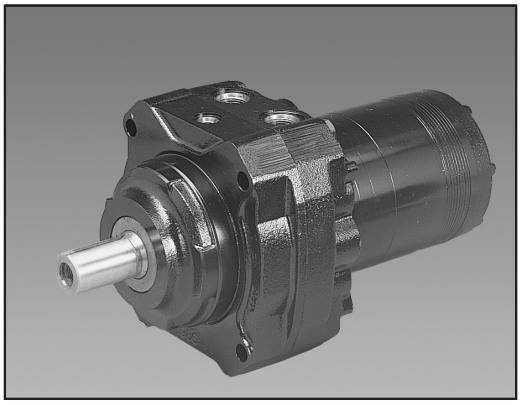

Rated Brake Holding Capacity @ Zero Release Pressure Nm (in-lbs)	Minimum Full Release Pressure bar (PSI)
1800 (16,000)	22 (315)

16,000 in-lbs is standard holding capacity.
For other holding capacities, see page 287.

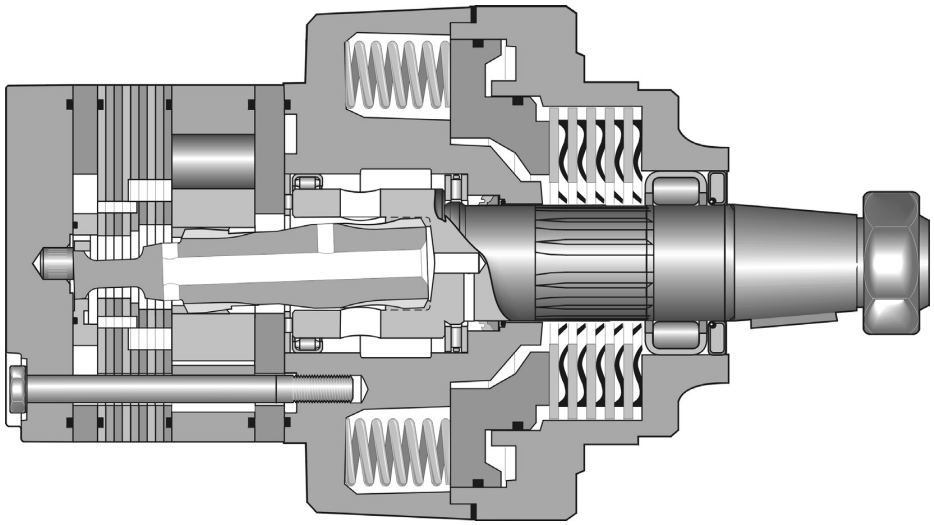

015 BH Brake.indd, b

⚠ WARNING
This product can expose you to chemicals including lead and DEHP, which are known to the State of California to cause cancer, and birth defects or other reproductive harm. For more information go to www.p65warnings.ca.gov

BH
Series

XXXX
Displacement
Schluckvolumen
Cylindrée
Desplazamiento

Code	cm³/tr cm³/giro cm³/U	in³/rev
0140	141	8.6
0170	169	10.3
0195	195	11.9
0240	238	14.5
0280	280	17.1
0310	310	18.9
0335	337	20.6
0360	360	22.2
0405	405	24.7
0475	477	29.1
0530	528	32.3
0625	623	38.0
0785	786	48.0
0960	959	58.5

XX
Mounting/Ports
Gehäuse/Anschluß
Carter/Plan de raccordement
Montaje/Lumbreras

Code	Mounting/Ports
AS	Front Mtg/Front Bolting 1/2-13 UNC Thd 7/8-14 SAE 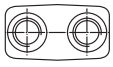
CS	Rear Mtg/Thru Bolting, 7/8-14 SAE 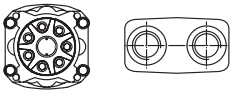
Custom Order DS	Front Mtg/Thru Bolding, 7/8 - 14 O Ring Port 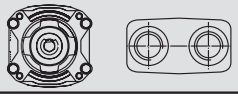

XX
Shaft
Welle
Arbre
Eje

Code	Shaft
31	1 1/2" J501 Taper 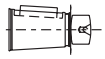
Custom Order 32	1 1/2" Keyed 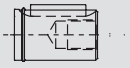

For performance data curves, see TH section.

Shaded areas indicate custom order components. Standard pricing and delivery terms may not apply to these components. Please refer to the price list for details, or consult your Parker Pump Motor division Sales Resource.

⚠ **WARNING**
This product can expose you to chemicals including lead and DEHP, which are known to the State of California to cause cancer, and birth defects or other reproductive harm. For more information go to www.p65warnings.ca.gov

Tel: +45 63 12 83 00 | Email: ps@hymatik.com | www.hymatik.com | Hvidkaervej 27a, DK-5250 Odense SV, Denmark

0

Rotation
Drehrichtung
Direction de rotation
Rotacion

Code	Front Port Rotation
0	Standard 
1	Reverse Timed Manifold 

XXXX

Options
Opciones

Code	Options
AAAA	"Standard", Black Paint (045134), Paint area all over except front and rear pilot and mounting flanges and shaft
AAAB	"Standard", No Paint
AAAC	"Standard", Double Paint (045247), Paint area all over except front and rear pilot and mounting flanges and shaft
AABJ	Free Running Rotor Set, Black paint (045134), Paint area all over except front and rear pilot and mounting flanges and shaft
AABT	Black paint (045134), Paint area all over except front and rear pilot and mounting flanges and shaft, No shaft hardware
AAFA	Fluorocarbon (Viton) Seals, High Temp Commutator Seal, No paint
AAFW	Fluorocarbon (Viton) Seals, High Temp Commutator Seal, Black paint (045134), Paint area all over except front and rear pilot and mounting flanges and shaft
AAJH	Fluorocarbon (Viton) Seals, High Temp Commutator Seal, Black paint (045134), Paint area all over except front and rear pilot and mounting flanges and shaft, No shaft hardware
AAJL	No paint, No shaft hardware
AAUP	Fluorocarbon (Viton) Seals, High Temp Commutator Seal, No Paint, No shaft Hardware
AAVE	Free Running Rotor Set, Fluorocarbon (Viton) Seals, High Temp Commutator Seal, Black Paint (045134), Paint area all over except front and rear pilot and mounting flanges and shaft
ABCW	Fluorocarbon (Viton) Seals, High Temperature Commutator Seal, Bidirectional shuttle (.062 Orifice) (11:00*), Black Paint (045134), Paint area all over except front and rear pilot and mounting flanges and shaft, No Shaft Hardware
ABCZ	Fluorocarbon (Viton) Seals, Double paint (045247), Paint area all over except front and rear pilot and mounting flanges and shaft
BBGV	Fluorocarbon (Viton) Seals, High Temperature Commutator Seal, 1015 PSI Int Bidirectional Relief, Black Paint (045134), Paint area all over except front and rear pilot and mounting flanges and shaft, No Shaft Hardware
BBGW	Fluorocarbon (Viton) Seals, High Temperature Commutator Seal, 1450 PSI Int Bidirectional Relief, Black Paint (045134), Paint area all over except front and rear pilot and mounting flanges and shaft, No Shaft Hardware
BBGX	No Shaft Hardware, Fluorocarbon (Viton) Seals, High Temperature Commutator Seal, 2031 PSI Int Bidirectional Relief, Black Paint (045134), Paint area all over except front and rear pilot and mounting flanges and shaft, No Shaft Hardware
BBGY	Fluorocarbon (Viton) Seals, High Temperature Commutator Seal, 3046 PSI Int Bidirectional Relief, Black Paint (045134), Paint area all over except front and rear pilot and mounting flanges and shaft, No Shaft Hardware
BBGZ	Fluorocarbon (Viton) Seals, High Temperature Commutator Seal, 4061 PSI Int Bidirectional Relief, Black Paint (045134), Paint area all over except front and rear pilot and mounting flanges and shaft, No Shaft Hardware
BBHC	Fluorocarbon (Viton) Seals, High Temperature Commutator Seal, 725 PSI Int Bidirectional Relief, Black Paint (045134), Paint area all over except front and rear pilot and mounting flanges and shaft, No Shaft Hardware
BBHD	Fluorocarbon (Viton) Seals, High Temperature Commutator Seal, 2538 PSI Int Bidirectional Relief, Black Paint (045134), Paint area all over except front and rear pilot and mounting flanges and shaft, No Shaft Hardware

Shaded areas indicate custom order components. Standard pricing and delivery terms may not apply to these components. Please refer to the price list for details, or consult your Parker Pump Motor division Sales Resource.

WARNING
This product can expose you to chemicals including lead and DEHP, which are known to the State of California to cause cancer, and birth defects or other reproductive harm. For more information go to www.p65warnings.ca.gov

Tel: +45 63 12 83 00 | Email: ps@hymatik.com | www.hymatik.com | Hvidkaervej 27a, DK-5250 Odense SV, Denmark

Wheel Mount/Radnabengenhause
Monture à roue/ Montaje de rueda

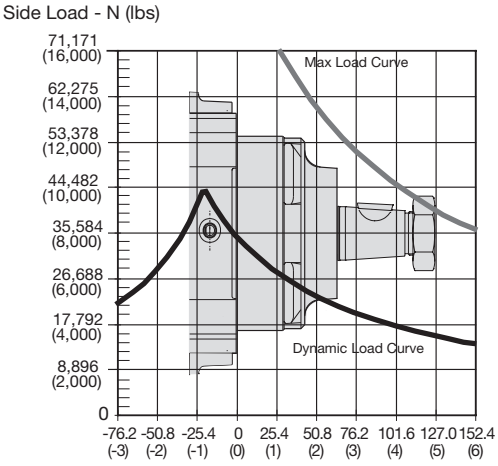

The maximum load curve is defined by bearing static load capacity. This curve should not be exceeded at any time including shock loads.
Die maximale radiale Wellenbelastungskurve ist definiert als maximale statische Last ohne Drehzahl. Sie gilt als Grenze und sollte keinesfalls überschritten werden.
La courbe de charge maximale est définie par la capacité de charge statique portante. Cette courbe ne devrait être dépassée en aucun moment y compris pour les charges par à-coups.
La curva de carga máxima queda definida por la capacidad de carga estática del cojinete. No se deben superar los valores de esta curva, ni siquiera con cargas provisorias de impacto.

The dynamic side load curve is based on uni-directional steady state loads for L_{10} bearing life at 6 x 10^6 revolutions.
Die zulässige auslegbare radiale Wellenbelastungskurve ist unter ruhenden, einseitig statisch gerichteten Lastverhältnissen auf eine L_{10} Lebensdauer mit 6 x 10^6 Umdrehungen kalkuliert.
La courbe de charge latérale permise se base sur des charges unidirectionnelles en régime permanent pour le roulement L_{10} à 6 x 10^6 révolutions.
La curva de valores admisibles de carga lateral está basada en cargas constantes para cojinetes L_{10} a 6 x 10^6 revoluciones.

Equation to Calculate the Expected Radial Bearing Life
Gleichung zur Ermittlung der Lagerlebensdauer

Equation to calculate the dynamic bearing life for a given load:
Bestimmung der erlaubten radialen Wellenbelastung mit vorgegebener Last

Use F_a, F_b and S in equation to determine hours of L_{10} bearing life.
Die Lebensdauer in Stunden ergibt sich durch einsetzen von F_a, F_b, und S in die nachstehende Formel.

$$L = \frac{6 \times 10^6}{60 \times S} \left\{ \frac{F_a}{F_b} \right\}^{3.33}$$

Where / Mit:

S = Shaft Speed RPM / Abtriebswellendrehzahl in min^{-1}
L = Life In Hours / Lebensdauer in Stunden
F_a = Dynamic side load defined by above curve at a distance from mounting flange. / Erlaubte radiale Wellenbelastung als Function der Laenge
F_b = Application side load. / Anwendungsseitige Wellenbelastung

Note: Calculations are based on L_{10} bearing life per ISO 281.
Auslegung basiert auf einer L_{10} Lenbendauer nach ISO 281

WARNING
This product can expose you to chemicals including lead and DEHP, which are known to the State of California to cause cancer, and birth defects or other reproductive harm. For more information go to www.p65warnings.ca.gov

Tel: +45 63 12 83 00 | Email: ps@hymatik.com | www.hymatik.com | Hvidkaervej 27a, DK-5250 Odense SV, Denmark

Code: AS

Front Mounting / Front Bolting, 7/8-14 SAE O-Ring

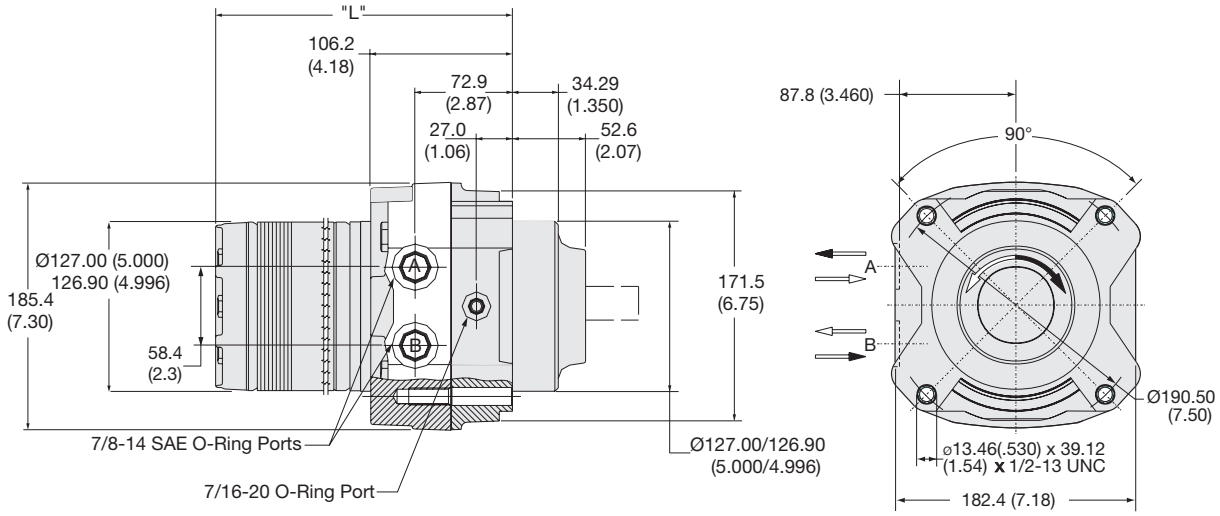

Code AS			0140	0170	0195	0240	0280	0310	0335	0405	0475	0530	0625	0785	0960
Weight/Gewicht		**kg**	**27.3**	**27.5**	**27.8**	**28.1**	**28.5**	**28.7**	**28.9**	**29.5**	**30.2**	**30.9**	**31.7**	**33.2**	**34.9**
Poids/Peso		(lb)	(60.2)	(60.8)	(61.3)	(62.1)	(63.0)	(63.5)	(63.9)	(65.2)	(66.7)	(68.3)	(69.9)	(73.3)	(77.1)
Length	**"L"**	**mm**	**198.6**	**201.7**	**205.0**	**209.6**	**214.4**	**217.9**	**220.7**	**228.1**	**236.7**	**243.1**	**252.5**	**271.5**	**290.6**
	"L"	(in)	(7.82)	(7.94)	(8.07)	(8.25)	(8.44)	(8.58)	(8.69)	(8.98)	(9.32)	(9.57)	(9.94)	(10.69)	(11.44)

Code: CS

Rear Mounting/Thru Bolting, 7/8-14 SAE O-Ring

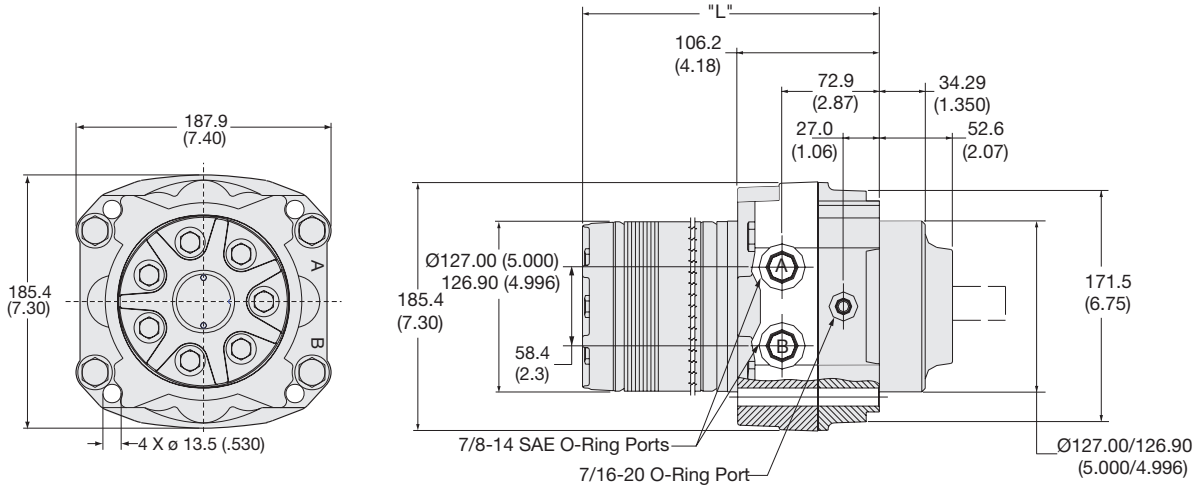

Code CS			0140	0170	0195	0240	0280	0310	0335	0405	0475	0530	0625	0785	0960
Weight/Gewicht		**kg**	**27.3**	**27.5**	**27.8**	**28.1**	**28.5**	**28.7**	**28.9**	**29.5**	**30.2**	**30.9**	**31.7**	**33.2**	**34.9**
Poids/Peso		(lb)	(60.2)	(60.8)	(61.3)	(62.1)	(63.0)	(63.5)	(63.9)	(65.2)	(66.7)	(68.3)	(69.9)	(73.3)	(77.1)
Length	**"L"**	**mm**	**198.6**	**201.7**	**205.0**	**209.6**	**214.4**	**217.9**	**220.7**	**228.1**	**236.7**	**243.1**	**252.5**	**271.5**	**290.6**
	"L"	(in)	(7.82)	(7.94)	(8.07)	(8.25)	(8.44)	(8.58)	(8.69)	(8.98)	(9.32)	(9.57)	(9.94)	(10.69)	(11.44)

English equivalents for metric specifications are shown in ( ).

WARNING
This product can expose you to chemicals including lead and DEHP, which are known to the State of California to cause cancer, and birth defects or other reproductive harm. For more information go to www.p65warnings.ca.gov

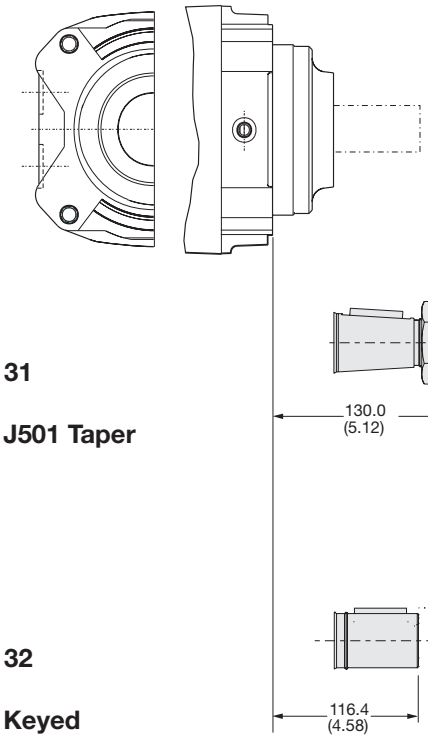

Code: 31

1 1/2" J501 Taper

Code: 32

1 1/2" Keyed

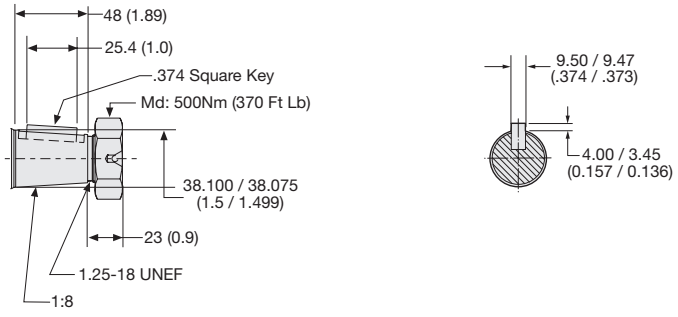

Code: 31

1 1/2" J501 Taper

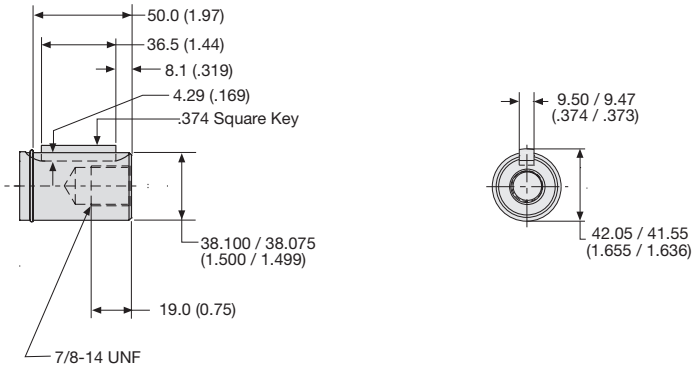

Code: 32

1 1/2" Keyed

English equivalents for metric specifications are shown in ( ).

WARNING
This product can expose you to chemicals including lead and DEHP, which are known to the State of California to cause cancer, and birth defects or other reproductive harm. For more information go to www.p65warnings.ca.gov

Tel: +45 63 12 83 00 | Email: ps@hymatik.com | www.hymatik.com | Hvidkaervej 27a, DK-5250 Odense SV, Denmark

Standard Options

Availability						Code		
TF/DF	Clutch	TG/DG	TH	BG/BH	TL	Painted	Unpainted	Description
x	x	x	x	x	x	AAAA	AAAB	Black Paint
x	x	x	x	x	x	AAAC	-	Double Paint
x[9]	x	x[15]	x[15]	x[15]	x	AAAF	AABP	Castle Nut
x	x	x	x	x	x	AAAG	AAAH	Fluorocarbon Seals
x	x	x	x	x	x	AAAJ	AAFG	High Temperature Commutator Seal
x	x	x	x	x		AABJ	AABK	Free Running Rotorset
x[10]		x[10]	x[10]	x		AAAT	AAFX	Hot Oil Shuttle (11:00)
x		x				AANM	-	Seal saver for 1.25 taper shaft only
x				x		AANB	-	678 Nm (6000 in-lb) Holding Capacity
				x		AAMN	AANH	1808 Nm (16000 in-lb) Holding Capacity
x[9,10]		x[10,15]	x[10,15]	x	x	AAAU	AAGF	Bi-directional Shuttle (11:00*), Castle Nut
x		x	x	x	x	AAAW	-	Bi-directional Shuttle (11:00*), High Temperature Commutator Seal
x	x	x	x	x		AABL	AABM	Free Running Rotor Set & No Commutator Seal
x	x	x	x	x		AABT	-	No Nut
x		x	x	x	x	AACP	-	Free Running Rotor Set, Castle Nut
x	x	x	x	x	x	-	AADJ	High Temperature Commutator Seal, Castle Nut
x	x	x		x	x	AAFW	AAFA	Fluorocarbon (Viton) Seals, High Temperature Commutator Seal
x	x	x	x	x	x	-	AAFX	Bidirectional shuttle (11:00*)
x		x	x	x	x	AAHU	-	High Temperature Commutator Seal, No Nut
x		x	x	x	x	-	AAJL	No Nut
x		x	x	x	x	AALD	-	Bidirectional shuttle (1:00*), Castle Nut
x		x	x	x	x	AALE	-	Bidirectional shuttle (1:00*)
x		x	x	x		AALF	-	No Commutator Seal
x		x	x	x		-	AALP	Free Running Rotor Set, Fluorocarbon (Viton) Seals, High Temperature Commutator Seal
				x		AAML	-	(IBM) Bidirectional shuttle (11:00*), Castle Nut, 6 Brake Springs Installed
				x		AAMM	-	(IBM) Castle Nut, 6 brake springs installed, (9000 in-lbs hold cap)
				x		AAMN	-	(IBM) 'Yellow' brake springs (8), (16,000 in-lbs hold cap)
				x		AAMP	-	(IBM) 'Yellow' brake springs (8), (16,000 in-lbs hold cap), Castle Nut
x[10]	x	x[10]	x[10]	x[10]	x	BBBA	BBBM	69 Bar (1000 PSI) Internal Bidirectional Relief
x[10]	x	x[10]	x[10]	x[10]	x	BBBG	BBBJ	103 Bar (1500 PSI) nternal Bidirectional Relief
x[10]	x	x[10,16]	x[10,16]	x[10,16]	x	BBBB	BBBN	138 Bar (2000 PSI) Internal Bidirectional Relief
x[10,12]	x[14]	x[10,18]	x[10,18]	x[10,18]	x	BBBC	BBBF	207 Bar (3000 PSI) Internal Bidirectional Relief
x[10,13]	x[13]	x[10,19]	x[10,19]	x[10,19]		BBBD	BBBW	276 Bar (4000 PSI) Internal Bidirectional Relief
x[10,11]	x[14]	x[10,17]	x[10,17]	x[10,17]	x	BBDL	BBCG	2500 PSI Int Bidirectional Relief
x		x	x	x	x	-	BBCW	3000 PSI Int Bidirectional Relief, No Nut
x		x	x	x	x	BBCX	-	2500 PSI Int Bidirectional Relief, No Nut
x		x	x	x	x	-	BBDA	3000 PSI Int Bidirectional Relief, Castle Nut
x		x	x	x	x	-	BBDH	2500 PSI Int Bidirectional Relief, Castle Nut
x[10]	x	x	x	x	x	BBDN	-	1750 PSI Int Bidirectional Relief
x	x	x	x	x	x	-	BBDP	725 PSI Int Bidirectional Relief
x		x	x	x		BBDW	-	725 PSI CCW Int Bidirectional Relief (045134)
x		x				FSAA	FSAB	Speed Sensor
x		x				FSAJ	FSAH	Int Short Speed Sensor, Castle Nut
x		x	x			-	AAUY	Complete Motor Nickel Plated, 40 um, Except Shaft
Consult factory for other positions and combinations.								

[9] Available only with shaft code 08
[10] Not available with ports code A, B or E
[11] Not available with displacement 0475
[12] Not available with displacements 0360, 0405 or 0475
[13] Only available with displacement 0080
[14] Not available with displacements 0365
[15] Available only with shaft codes 08 and 19
[16] Not available with displacement 0960
[17] Not available with displacements 0625, 0785 or 0960
[18] Not available with displacements 0530, 0625, 0785 or 0960
[19] Not available with displacements 0360, 0405, 0530, 0625, 0785 or 0960

WARNING
This product can expose you to chemicals including lead and DEHP, which are known to the State of California to cause cancer, and birth defects or other reproductive harm. For more information go to www.p65warnings.ca.gov

Code: AAAC

Double Paint — Base coat of red oxide primer and finish coat of black paint for increased corrosion resistance.

Code: AAAF* or AABP

Castle Nut — All motors ordered with Tapered shafts are equipped with patch locking nuts. If desired, a castle nut may be specified.

Code: AAAJ* or AAFG

High Temperature Commutator Seal — Under conditions of high temperature, it is suggested that a high temperature commutator seal be used.

Code: AAAG* or AAAH

Fluorocarbon — is available under various registered trademarks, including VITON™ (a registered trademark of DuPont), FLUOREL™ (a registered trademark of 3M) or FPM™ (a registered trademark of DuPont).

Code: AABJ* or AABK

Free Running Rotorset — The “free running rotorset” is a specially dimensioned rotorset that allows for smoother operation at low flows and low pressure. Volumetric efficiency can be affected.

Code: AANM*

Seal Saver — Seal saver is a metal disc that presses onto the motor shaft, covering the dirt and water (D&W) seal. It’s purpose is to aid in preventing external contamination from damaging the D&W seal.

Code: AAAC

Zweischichtlackierung schwarz

Code AAAF* or AABP

Kronenmutter
Selbstsichernde Mutter wird ersetzt durch Kronenmutter

Code: AAAJ* or AAFG

Kommutatordichtung fuer hohe Temperaturen
— Bei hohen Temperaturen des Hydraulikoels wird empfohlen die Kommutatordichtung fuer hohe Temperaturen einzusetzten!

Code: AAAG* or AAAH

Fluorocarbon Dichtungen
Für Anwendungen im höheren/niedrigeren Tenperaturenbereich oder speziellen Flüssigkeiten wird der Einsatz von Fluorcarbon Dichtungen empfohlen. Fluorocarbon ist bekannt unter verschiedenen eingetragenen Warenzeichen
VITON™ - DuPont, Fluorel™ - 3M, FPM™ - DuPont

Code: AABJ* or AABK

Leichtläufer Rotorsatz
Anlaufdruck < 5 bar

Code: AANM*

Versiegelungsschutz — Der Versiegelungsschutz besteht aus einer Metallscheibe, die gegen die Antriebswelle druckt und damit Schmutz- und Wasserdichtung (D&W-Dichtung) abdeckt. Hierdurch soll einer Beschadigung der D&W-Dichtung auf Grund externer Verunreinigungen vorgebeugt werden.

* Option code shown is with a single black coat of paint.
* Motor schwarz grundiert

WARNING
This product can expose you to chemicals including lead and DEHP, which are known to the State of California to cause cancer, and birth defects or other reproductive harm. For more information go to www.p65warnings.ca.gov

Tel: +45 63 12 83 00 | Email: ps@hymatik.com | www.hymatik.com | Hvidkaervej 27a, DK-5250 Odense SV, Denmark

Code: FSAA* or FSAB

An Economical Sensor for Speed Readout

This rugged, weather resistant design is ideal for industrial and mobile applications. Applications include salt/sand/fertilizer spreader drives, conveyer drives and injection molder compression drives. The sensor is a hall-effect type, which when externally powered outputs 30 square wave digital pulses per coupling shaft revolution. The connector is a user friendly universally available 4 pin polarized M12 connector allowing for simplified field service. The integrated design does not effect the side load capacity or performance of the torque motor.

Dieser robuste, wetterfeste Drehzahlaufnehmer arbeitet nach dem Halleffekt. Es werden 30 Rechteckimpulse pro Abtriebswellenumdrehung erzeugt. Durch Erfassung der positiven und negativen Wellenflanken sind 60 Impulse pro Umdrehung möglich. Der Sensor führt zu keiner Leistungsbeschränkung des Motors. Die volle Radiallastkapazität bleibt erhalten.

Un capteur economique pour mesure de la vitesse. Ce capteur robuste et resistant aux intemperies est a effet Hall. Alimente par une source externe, il fournit 30 ondes digitales carrees par tour. Par multiplication lelectronique on obient 60 pulsations par tour. Son montage ne modifie pas le couple ni la charge radiale du moteur qui le recoit.

Este es un diseño de construcción reforzada, apto para uso a la intemperie e ideal para uso industrial y en equipos móviles. Entre sus aplicaciones, se puede mencionar esparcidores de sal, arena o fertilizantes, unidades motoras de transportadores y unidades motoras de compresión para moldeo a inyección. El sensor es del tipo de medio efecto, que al ser excitado externamente, genera 30 pulsos digitales de onda cuadrada por cada revolución del eje del acoplamiento. Utiliza un simple conector M12 polarizado tetrapolar, que es de uso común y facilita el mantenimiento en el lugar de instalación. El diseño integrado no afecta la capacidad de carga lateral ni la potencia del motor de torque.

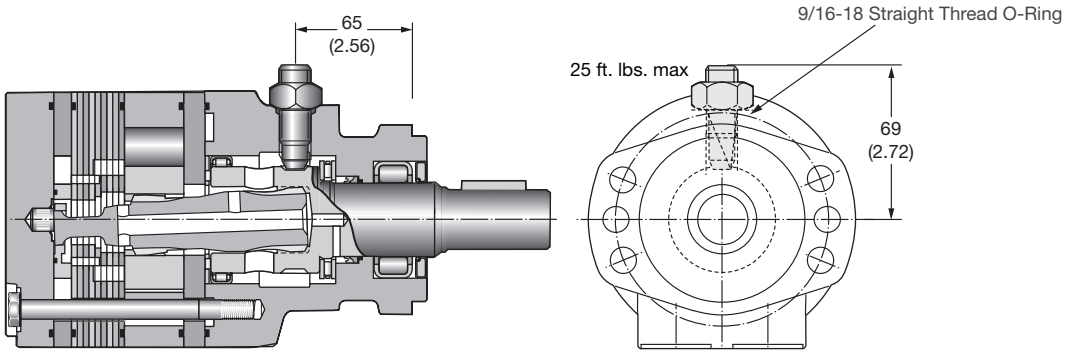

English equivalents for metric specifications are shown in ( ).

WARNING
This product can expose you to chemicals including lead and DEHP, which are known to the State of California to cause cancer, and birth defects or other reproductive harm. For more information go to www.p65warnings.ca.gov

Tel: +45 63 12 83 00 | Email: ps@hymatik.com | www.hymatik.com | Hvidkaervej 27a, DK-5250 Odense SV, Denmark

Speed Sensor / Drehzahl-Sensor
Compte-tours / Contagiri

LSHT Torqmotors™ and Nichols™ Motors
Medium Duty Motors HY13-1590-011/US,EU

Operating voltage range **Versorgungsspannung** **Gamme de tension de service** **Gama de voltaje de alimentacion**	4.5...24 VDC
Operating temperature **Arbeitstemperatur** **Temperature de service** **Temperatura de servicio**	-20° to 220° F -29°...104° C
Operating frequency range **Arbeitsfrequenz** **Gamme de frequences de service** **Gama de frecuencia de servicio**	0...10 KHZ
Max sink current **Erforderlicher Laststrom** **Courant d'affaissement maxi** **Corriente maxima de alimentacion**	0 ... 20 mA (max.)
Connection **Anschluß** **Branchement** **Conexion**	4 Pin Polarized (12mm)
Sensor output **Sonsorausgang** **Sortie du détecteur** **Salida del sensor**	30 Pulses per revolution which can be doubled electronically 30 impulsions par revolution pouvant etre doublees electroniquement 30 pulsos por revlucion, que pueden duplicarse electronicamente
Output is NPN **Ausgang is NPN** **La sortie est NPN** **La salida es NPN**	Open Collector Collecteur ouvert Colector abierto

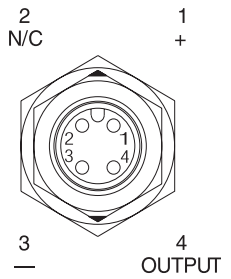

4 Pin Polarized
M12 Connector (Male)

Cable and "Pull Up" Resistor are *not* supplied by factory.

Zubehör wie z.B. Kabel gehören nicht zum Lieferumfang.

Le câble et la résistance "Pull Up" ne sont pas fournis par l'usine.

El cable y la resistencia de arranque no se suministran originalmente de fábrica.

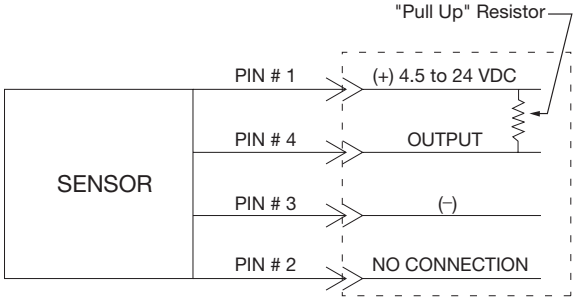

Pull-up Resistor Value Formula
Formel zur Ermittlung des Pull up-Widerstandes
Formule de la valeur de resistance "Pull-up"
Calculo de la resisancia de carga

(0.25 Watt, 5% de tol.)
(0.25 Watt, Tol. 5%)
(0.25 Watt 5% Tol.)
(0.25 Watt, toll. 5%)

$$\frac{\text{Voltage / Spannung / Curant d'affaisement / Voltaje } 4.5...24\text{ VDC}}{\text{Sink Current / Laststrom Resistance / Corriente de ali mentacion } 0...20\text{ mA}} = \text{Resistor / Widerstand / Resistance / Resistancia (k Ohm)}$$

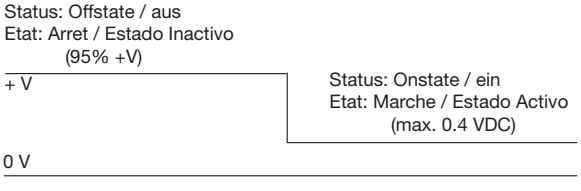

WARNING
This product can expose you to chemicals including lead and DEHP, which are known to the State of California to cause cancer, and birth defects or other reproductive harm. For more information go to www.p65warnings.ca.gov

Parker Hannifin Corporation
Pump & Motor Division
Greeneville, Tennessee, USA

Code: AAFX or AAAT*

A Hot Oil Shuttle is used to continuously remove a portion of the fluid in a closed loop transmission or other closed loop system. At 125 PSI pressure differential between the motor return port and the shuttle outlet,1.5 GPM* will exit the circuit to cool, filter and return to the reservoir. The constant loop replenishment helps to keep heat and contamination from building up in the circuit. This option is not available with rear ports or integral cross over relief.

Spülventil für geschlossene Systeme zur Rückführung einer definierten Menge des Niederdrucköls in den Tank zur Abkühlung innerhalb desselben Kreislaufs.

Valve de rincage pour systèmes fermès pour le retour d`un volume dèterminè de fluide basse pression vers le rèservoir, un refroidisseur ou un filtre de rèfrigèration, dans le même circuit.

Un transferidor de aceite caliente actúa permanentemente para extraer una parte del fluido en una transmisión de circuito cerrado u otro sistema de circuito cerrado. Entre la entrada de retorno del motor y la salida del transferidor hay una diferencia de presión de 125 psi (libras/pulg.^{2}), y a esta presión salen 1,5 galones por minuto del circuito para enfriarse, filtrarse y volver al depósito de fluido. El reacondicionamiento permanente de parte del fluido evita la contaminación del mismo y el incremento de temperatura en el circuito.

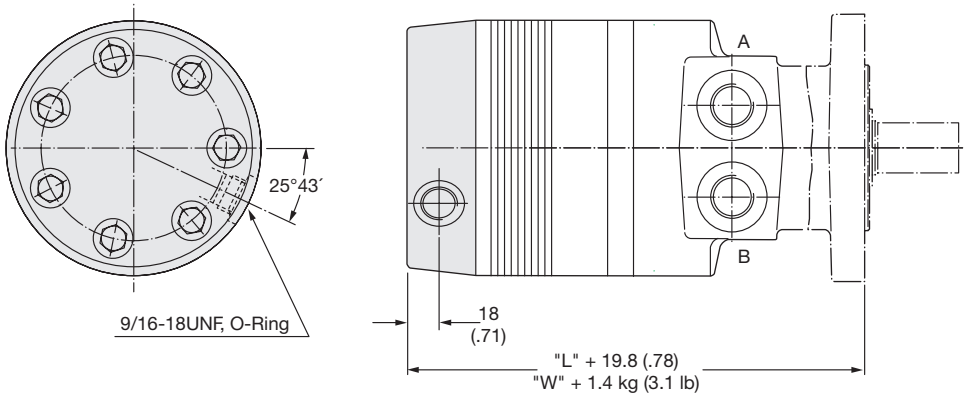

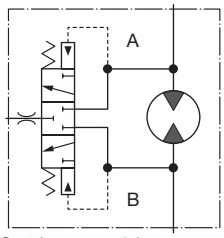

Q=5 l (Q=1.32 gal) p=9 bar (p=131 psi) ϑ=39 cSt (ϑ=190 SUS)

Standard Length & Weights for TF Series on Pages 131-136, TG Series on Pages 185-189 and TH Series on Pages 227-228.
Längen/Gewichte TF Serie Seiten 131-136, TG Serie Seiten 185-189, TH Serie Seiten 150-151.
Longueurs et poids courants pour la série TF, voir les pages 131-136, et la série TG, voir les pages 185-189, et la série TH, voir les pages 227-228.
Los valores estándar de longitud y peso de la Serie TF se puede ver en las Páginas 131-136, y de la Serie TG en las Páginas 185-189, y de la Serie TH en las Páginas 227-228.

English equivalents for metric specifications are shown in ( ).

WARNING
This product can expose you to chemicals including lead and DEHP, which are known to the State of California to cause cancer, and birth defects or other reproductive harm. For more information go to www.p65warnings.ca.gov

Tel: +45 63 12 83 00 | Email: ps@hymatik.com | www.hymatik.com | Hvidkaervej 27a, DK-5250 Odense SV, Denmark

Code: BBBA*, BBBB*, BBBC*, BBBD* or BBBG*

This integrated internal relief valve is used for fixed pressure settings.

Internes Schockventil
La soupape de sécurité interne utilise pour des valeurs de pression fixes.
La valvula interna de alivio se utiliza para cablibraciones fijas de presion.

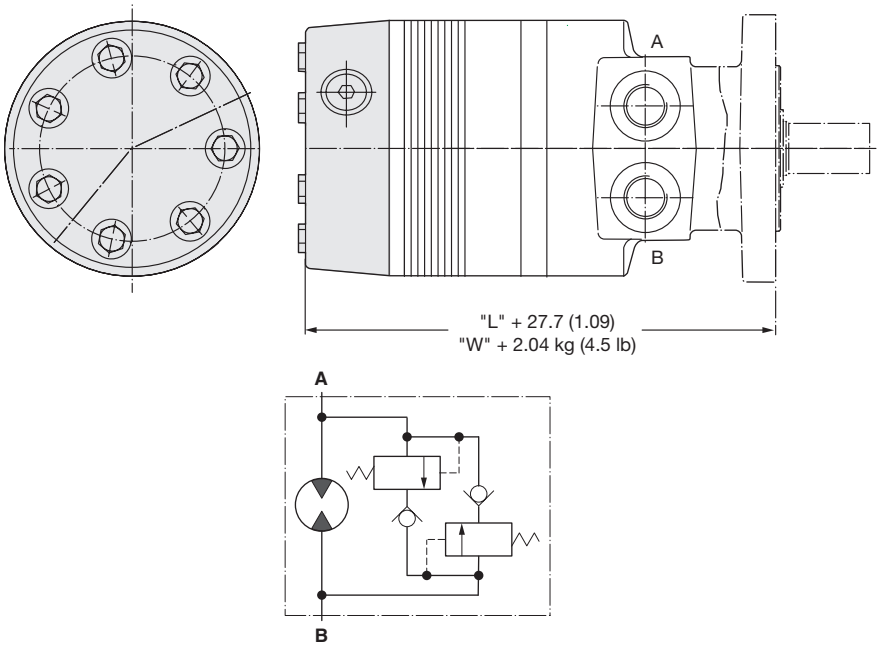

Bestellschlüssel / Systéme de Commande / Ordering system / Informacion para pedidos

Option		Pressure bar (psi)
BBBA	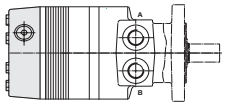 **Öffnungsdruck Opening pressure Tarage Presion de apertura**	69 (1000)
BBBB		138 (2000)
BBBC		207 (3000)
BBBD		276 (4000)
BBBG		103 (1500)

Standard Length & Weights for TF Series on Pages 131-136, TG Series on Pages 185-189 and TH Series on Pages 227-228.
Längen/Gewichte TF Serie Seiten 131-136, TG Serie Seiten 185-189, TH Serie Seiten 150-151.
Longueurs et poids courants pour la série TF, voir les pages 131-136, et la série TG, voir les pages 185-189, et la série TH, voir les pages 227-228.
Los valores estándar de longitud y peso de la Serie TF se puede ver en las Páginas 131-136, y de la Serie TG en las Páginas 185-189, y de la Serie TH en las Páginas 227-228.

English equivalents for metric specifications are shown in ( ).

WARNING
This product can expose you to chemicals including lead and DEHP, which are known to the State of California to cause cancer, and birth defects or other reproductive harm. For more information go to www.p65warnings.ca.gov

Tel: +45 63 12 83 00 | Email: ps@hymatik.com | www.hymatik.com | Hvidkaervej 27a, DK-5250 Odense SV, Denmark

Technical Information /Technische Information / Segni/Informacion Tecnica

Low Speed High Torque Torqmotors™
TGK Series / Serie / Série HY13-1590-011/US,EU

15 Displacements **15 Schluckvolumen** **15 Cylindrée** **15 Despazamientos**		(6.9 to 58.5 in³/rev) **110 . . . 959 cm³/rev**
	Cont.	**Int.**
Maximum Pressure **Eingangsdruck** **Pression entrée** **Presion Maxima**	(3500 psid) **. . . 241 bar**	(4000 psid) **. . . 276 bar**
Maximum Oil Flow **Schluckstrom** **Débit d'huile** **Caudal Maximo de Aceite**		(30 gpm) **. . . 114 lpm**
Maximum Speed **Drehzahl** **Vitesse de rotation** **Velocidad Maxima**		(660 rpm) **660 rpm**
	Cont.	**Int.**
Maximum Torque **MaxDrehmoment** **Couple** **Torque Maximo**	(14,624 lb in) **1652 Nm**	(17,948 lb in) **2028 Nm**
Maximum Side Load at Key **Seitenlast** **Charges latèrales** **Carga Maxima Lateral**		(3597 lb) **. . . 16000 N**

High Power Density in a Compact Design

The TGK motor is a compact motor with the performance of much larger motors. Up to 45 HP in less than 6 inches of length. This high power density allows for higher HP applications in a small space, reducing machine weight as well. Its unique drive train design is based on proven Torqmotor™ technology, assuring unmatched durability.

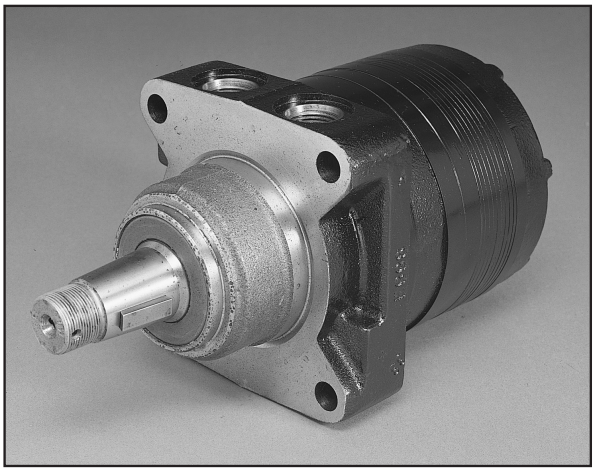

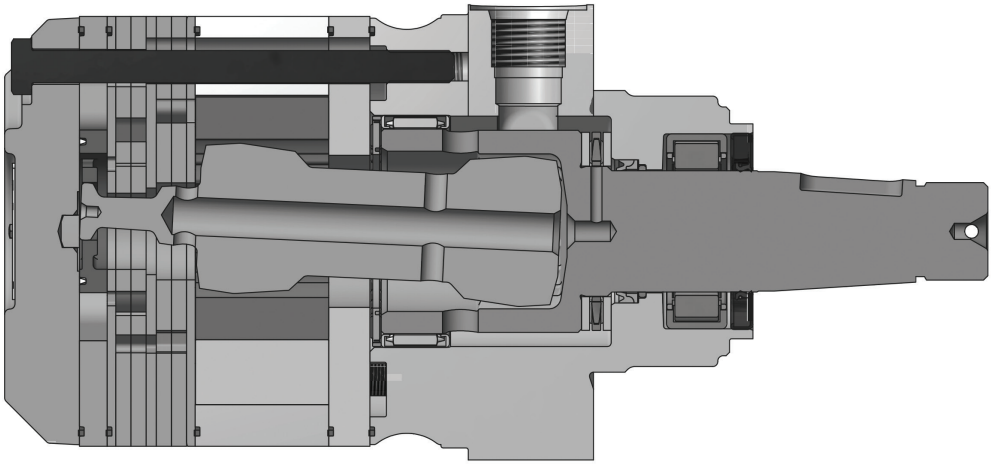

⚠ **WARNING**
This product can expose you to chemicals including lead and DEHP, which are known to the State of California to cause cancer, and birth defects or other reproductive harm. For more information go to www.p65warnings.ca.gov

Parker Hannifin Corporation
Pump & Motor Division
Greeneville, Tennessee, USA

Ordering Information / Bestellschlüssel
System de Commande / Imformacion para pedidos

Low Speed High Torque Torqmotors™
TGK Series / Serie / Série HY13-1590-011/US,EU

TGK — Series

XXXX — Displacement / Schluckvolumen / Cylindrée / Desplazamiento

Code	cm³/tr cm³/giro cm³/U	in³/rev
0110	110	6.9
0140	141	8.6
0170	169	10.3
0195	195	11.9
0240	238	14.5
0280	280	17.1
0310	310	18.9
0335	337	20.6
0360	360	22.2
0405	405	24.7
0475	477	29.1
0530	528	32.3
0625	623	38.0
0785	786	48.0
0960	959	58.5

XX — Mounting/Ports / Gehäuse/Anschluß / Carter/Plan de raccordement / Montaje/Lumbreras

Code	Mounting/Ports
AS	SAE “A” 2 Bolt, 7/8-14 SAE 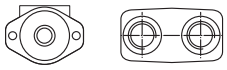
EM	Modified SAE “A” (6 Hole) with Long Pilot 5/16-18 UNC Manifold 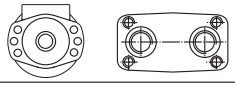
MS	Magneto, 7/8-14 SAE 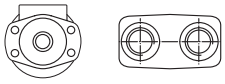
TS	Wheel Mount W/ Brake Mount Nose, No Tapped Holes In Nose, 7/8 O-ring (SAE #10) Front 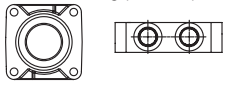
US	Wheel, Standard, 7/8-14 SAE 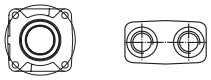
Custom Order	
HK	Wheel Mount w/Machined Pilot Nose, Manifold M6, Front 
MB	Standard Mount "A", 4-Bolt, Rear Port, 7/8 O-ring (SAE #10) Rear Radial 
MM	Magneto 5/16-18 UNC Manifold 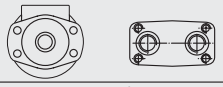
TW	Wheel Mount W/ Brake Mount Nose, No Tapped Holes In Nose, G1/2 (1/2 BSPP) Milled Front 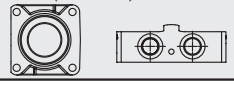

XX — Shaft / Welle / Arbre / Eje

Code	Shaft
05	1 1/4” 14 Tooth Spline 
08	1 1/4” Tapered 
20	1.38” Straight Keyed, 5/8 Tap 
39	4 Tooth, Groove, 5/8 Tap 
44	14 T. Spline (12/24 P.), 12mm Tap 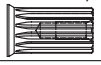
62*	1 1/4” 14 Tooth Spline SAE 
1L	1.50” Straight Keyed, No Tap 
Custom Order	
03	1 1/4” Keyed 
19	1 3/8" J501 Taper 

* Conforms to SAE recommended length

Shaded areas indicate custom order components. Standard pricing and delivery terms may not apply to these components. Please refer to the price list for details, or consult your Parker Pump Motor division Sales Resource.

WARNING
This product can expose you to chemicals including lead and DEHP, which are known to the State of California to cause cancer, and birth defects or other reproductive harm. For more information go to www.p65warnings.ca.gov

Parker Hannifin Corporation
Pump & Motor Division
Greeneville, Tennessee, USA

Tel: +45 63 12 83 00 | Email: ps@hymatik.com | www.hymatik.com | Hvidkaervej 27a, DK-5250 Odense SV, Denmark

Ordering Information / Bestellschlüssel
System de Commande / Imformacion para pedidos

Low Speed High Torque Torqmotors™
TGK Series / Serie / Série HY13-1590-011/US,EU

0

Rotation
Drehrichtung
Direction de rotation
Rotacion

Code	Rotation
0	Standard 
1	Reverse Timed Manifold 

Code	Rear Rotation
0	Standard 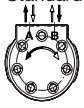
1	Reverse Timed Manifold 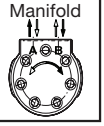

Rotation viewed from shaft end.

XXXX

Options
Opciones

Code	Options
AAAA	"Standard", Black Paint (045134), Paint area all over except front and rear pilot and mounting flanges and shaft
AAAB	"Standard", No Paint
AAAC	"Standard", Double Paint (045247), Paint area all over except front and rear pilot and mounting flanges and shaft
AABJ	Free Running Rotor Set, Black paint (045134), Paint area all over except front and rear pilot and mounting flanges and shaft
AABT	Black paint (045134), Paint area all over except front and rear pilot and mounting flanges and shaft, No shaft hardware
AAFA	Fluorocarbon (Viton) Seals, High Temp Commutator Seal, No paint
AAFW	Fluorocarbon (Viton) Seals, High Temp Commutator Seal, Black paint (045134), Paint area all over except front and rear pilot and mounting flanges and shaft
AAJH	Fluorocarbon (Viton) Seals, High Temp Commutator Seal, Black paint (045134), Paint area all over except front and rear pilot and mounting flanges and shaft, No shaft hardware
AAJL	No paint, No shaft hardware
AAUP	Fluorocarbon (Viton) Seals, High Temp Commutator Seal, No Paint, No shaft Hardware
AAVE	Free Running Rotor Set, Fluorocarbon (Viton) Seals, High Temp Commutator Seal, Black Paint (045134), Paint area all over except front and rear pilot and mounting flanges and shaft
ABCW	Fluorocarbon (Viton) Seals, High Temperature Commutator Seal, Bidirectional shuttle (.062 Orifice) (11:00°), Black Paint (045134), Paint area all over except front and rear pilot and mounting flanges and shaft, No Shaft Hardware
ABCZ	Fluorocarbon (Viton) Seals, Double paint (045247), Paint area all over except front and rear pilot and mounting flanges and shaft
BBGV	Fluorocarbon (Viton) Seals, High Temperature Commutator Seal, 1015 PSI Int Bidirectional Relief, Black Paint (045134), Paint area all over except front and rear pilot and mounting flanges and shaft, No Shaft Hardware
BBGW	Fluorocarbon (Viton) Seals, High Temperature Commutator Seal, 1450 PSI Int Bidirectional Relief, Black Paint (045134), Paint area all over except front and rear pilot and mounting flanges and shaft, No Shaft Hardware
BBGX	No Shaft Hardware, Fluorocarbon (Viton) Seals, High Temperature Commutator Seal, 2031 PSI Int Bidirectional Relief, Black Paint (045134), Paint area all over except front and rear pilot and mounting flanges and shaft, No Shaft Hardware
BBGY	Fluorocarbon (Viton) Seals, High Temperature Commutator Seal, 3046 PSI Int Bidirectional Relief, Black Paint (045134), Paint area all over except front and rear pilot and mounting flanges and shaft, No Shaft Hardware
BBGZ	Fluorocarbon (Viton) Seals, High Temperature Commutator Seal, 4061 PSI Int Bidirectional Relief, Black Paint (045134), Paint area all over except front and rear pilot and mounting flanges and shaft, No Shaft Hardware
BBHC	Fluorocarbon (Viton) Seals, High Temperature Commutator Seal, 725 PSI Int Bidirectional Relief, Black Paint (045134), Paint area all over except front and rear pilot and mounting flanges and shaft, No Shaft Hardware
BBHD	Fluorocarbon (Viton) Seals, High Temperature Commutator Seal, 2538 PSI Int Bidirectional Relief, Black Paint (045134), Paint area all over except front and rear pilot and mounting flanges and shaft, No Shaft Hardware
FSEK	Fluorocarbon (Viton) Seals, High Temperature Commutator Seal, Parker ECD Speed Sensor (455073), Black Paint (045134), Paint area all over except front and rear pilot and mounting flanges and shaft, No Shaft Hardware
FSEN	Fluorocarbon (Viton) Seals, High Temperature Commutator Seal, Parker ECD Speed Sensor (455073), No Paint, No Shaft Hardware

Shaded areas indicate custom order components. Standard pricing and delivery terms may not apply to these components. Please refer to the price list for details, or consult your Parker Pump Motor division Sales Resource.

WARNING
This product can expose you to chemicals including lead and DEHP, which are known to the State of California to cause cancer, and birth defects or other reproductive harm. For more information go to www.p65warnings.ca.gov

Parker Hannifin Corporation
Pump & Motor Division
Greeneville, Tennessee, USA

Tel: +45 63 12 83 00 | Email: ps@hymatik.com | www.hymatik.com | Hvidkaervej 27a, DK-5250 Odense SV, Denmark

Performance Data / Leistungsdaten
Puissance / Datos Tecnicos

Low Speed High Torque Torqmotors™
TGK Series / Serie / Série HY13-1590-011/US,EU

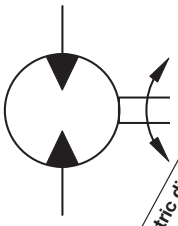

Motor Series TGK	Geometric displacement cm³/rev in³/rev	Max. speed @ Max. intermittent flow Max. Drehzahl Intermittierender Betrieb: Vitesse de rotation maxi Velocidad maxima a caudal intermitente maximo rev/min	Max. oil flow Max. Schluckstrom Débit d'huile maxi Portata max cont l/min g/min	int l/min g/min	Max. differential pressure Max. Druckgefälle Chute de pression maxi Presion diferencial maxima cont bar psid	int bar psid	Max. supply pressure Max. Eingangsdruck Pression maxi entrée Presion maxima de alimentacion max bar psid	Max. torque Max. Drehmoment Couple maxi Torque Maximo cont Nm lb-in	int Nm lb-in	Max. performance Max. Leistungabgabe Puissance de sortie maxi Potenza meccanica max max KW HP	Min. starting torque Min. Anlaufmoment Couple min. fourni au dé manrage Torque minimo de arranque cont Nm lb-in	int Nm lb-in
0110	**110** 6.9	672	**76** 20	**95** 25	**241** 3500	**276** 4000	**300** 4350	**373** 3299	**426** 3767	**24** 32	**279** 2464	**318** 2814
0140	**141** 8.6	660	**76** 20	**95** 25	**241** 3500	**276** 4000	**300** 4350	**474** 4199	**530** 4794	**30** 40	**354** 3137	**418** 3706
0170	**169** 10.3	554	**76** 20	**95** 25	**241** 3500	**276** 4000	**300** 4350	**578** 5114	**646** 5838	**32** 43	**432** 3820	**505** 4392
0195	**195** 11.9	477	**76** 20	**95** 25	**241** 3500	**276** 4000	**300** 4350	**671** 5936	**753** 6776	**31** 41	**501** 4434	**562** 5062
0240	**238** 14.5	393	**76** 20	**95** 25	**241** 3500	**276** 4000	**300** 4350	**794** 7027	**913** 8031	**30** 40	**593** 5250	**678** 6000
0280	**280** 17.1	334	**76** 20	**95** 25	**241** 3500	**276** 4000	**300** 4350	**936** 8286	**1073** 9470	**29** 39	**699** 6191	**799** 7075
0310	**310** 18.9	303	**76** 20	**95** 25	**241** 3500	**276** 4000	**300** 4350	**1037** 9175	**1229** 10465	**29** 39	**773** 6841	**883** 7819
0335	**337** 20.6	277	**76** 20	**95** 25	**241** 3500	**276** 4000	**300** 4350	**1128** 9981	**1297** 11834	**28** 37	**843** 7457	**963** 8522
0360	**360** 22.2	263	**76** 20	**95** 25	**241** 3500	**276** 4000	**300** 4350	**1205** 10665	**1377** 12189	**28** 37	**900** 7968	**1029** 9107
0405	**405** 24.7	232	**76** 20	**95** 25	**241** 3500	**276** 4000	**300** 4350	**1353** 11971	**1546** 13681	**29** 39	**1011** 8944	**1155** 10222
0475	**477** 29.1	237	**76** 20	**114** 30	**241** 3500	**276** 4000	**300** 4350	**1593** 14101	**1821** 16115	**37** 49	**1190** 10535	**1360** 12040
0530	**528** 32.3	231	**76** 20	**114** 30	**224** 3250	**259** 3750	**300** 4350	**1643** 14537	**1895** 16774	**32** 43	**1227** 10861	**1416** 12532
0625	**623** 38.0	182	**76** 20	**114** 30	**190** 2750	**224** 3250	**300** 4350	**1635** 14469	**1932** 17100	**28** 38	**1221** 10810	**1443** 12776
0785	**786** 48.0	143	**76** 20	**114** 30	**152** 2200	**186** 2700	**300** 4350	**1652** 14624	**2028** 17948	**22** 30	**1234** 10926	**1515** 13409
0960	**959** 58.5	118	**76** 20	**114** 30	**124** 1800	**159** 2300	**300** 4350	**1647** 14580	**2105** 18630	**19** 26	**1231** 10893	**1504** 13314

Performance data based on testing using 10W40 oil with a viscosity of 200 SUS at 54° C (130° F). Performance data is typical. Actual data may vary slightly from one production motor to another.

Les donnees sur les performances sont basees sur des tests utilisant de l'huile 10W40 d'une viscosite de 200 SUS a 54°C (130°F). Ces donnees correspondent a des situations typiques. Les donnees reelles peuvent varier legerement d'un moteur de production a l'autre.

Leistungsdaten sind gemessen mit SAE 10W40 bei einer Viskositaet von 43,1 Cst bei 54°C. Geringfuegige Abweichungen von den Katalogdaten sind moeglich.

Datos tecnicos obtenidos con aceite 10W40 de 200 SUS de viscosidad a 54°C (130°F). Los datos proporcionados son valores tipcos. Los valores exactos reales podrian tener una pequena variacion entre distintos motores.

* Intermittent operation rating applies to 10% of every minute.

Intermittierende Werte maximal 10% von jeder Betriebsminute.

Fonctionnement interm. 10% max. de chaque minute d`utilisation.

Capacidad de funcionamiento intermitente valida para 10% por cada minuto.

WARNING
This product can expose you to chemicals including lead and DEHP, which are known to the State of California to cause cancer, and birth defects or other reproductive harm. For more information go to www.p65warnings.ca.gov

Tel: +45 63 12 83 00 | Email: ps@hymatik.com | www.hymatik.com | Hvidkaervej 27a, DK-5250 Odense SV, Denmark

TGK 0110

110 cm³ / rev (6.9 in³ / rev)

PRESSURE (PSID)

	500	1000	1500	2000	2500	3000	3500	4000
.5	408 **11**	834 **5**						
1	424 **28**	856 **22**	1285 **14**	1713 **8**				
2	447 **62**	908 **55**	1359 **46**	1796 **38**	2221 **29**	2646 **24**	3063 **15**	3494 **15**
3	444 **95**	911 **88**	1370 **79**	1824 **70**	2278 **60**	2732 **51**	3181 **42**	3621 **37**
4	443 **130**	919 **120**	1389 **111**	1853 **102**	2312 **92**	2763 **81**	3207 **73**	3649 **66**
5	437 **163**	919 **153**	1395 **143**	1866 **134**	2332 **123**	2794 **113**	3249 **103**	3694 **97**
7	424 **232**	911 **219**	1398 **209**	1878 **197**	2352 **186**	2822 **176**	3285 **165**	3742 **157**
9	405 **299**	898 **286**	1389 **274**	1874 **262**	2354 **249**	2829 **238**	3299 **228**	3767 **218**
12	370 **401**	861 **386**	1358 **372**	1851 **358**	2337 **345**	2818 **332**	3294 **321**	3767 **309**
15	328 **503**	819 **485**	1314 **468**	1813 **454**	2304 **440**	2788 **428**	3270 **414**	3749 **400**
20	380 **672**	731 **636**	1230 **633**	1727 **616**	2220 **601**	2715 **584**	3204 **569**	3687 **554**

Flow (GPM)

TORQUE (LB IN) 2715
SPEED (RPM) **584**

TGK 0140

141 cm³ / rev (8.6 in³ / rev)

PRESSURE (PSID)

	500	1000	1500	2000	2500	3000	3500	4000
.5	519 **9**	1060 **4**						
1	540 **22**	1090 **17**	1635 **11**	2180 **6**				
2	569 **49**	1156 **43**	1730 **36**	2286 **30**	2827 **23**	3368 **19**	3899 **12**	4447 **12**
3	565 **75**	1159 **69**	1744 **62**	2321 **55**	2899 **47**	3477 **40**	4048 **33**	4608 **29**
4	564 **102**	1170 **94**	1768 **87**	2358 **80**	2943 **72**	3517 **64**	4082 **57**	4644 **52**
5	556 **128**	1170 **120**	1776 **112**	2375 **105**	2968 **97**	3556 **89**	4135 **81**	4701 **76**
7	540 **182**	1160 **172**	1779 **164**	2390 **155**	2994 **146**	3592 **138**	4181 **130**	4763 **123**
9	515 **235**	1143 **225**	1768 **215**	2385 **206**	2996 **196**	3601 **187**	4199 **179**	4794 **171**
12	471 **315**	1096 **303**	1729 **292**	2356 **281**	2974 **271**	3587 **261**	4193 **252**	4794 **243**
15	418 **395**	1042 **381**	1673 **368**	2307 **357**	2933 **346**	3549 **336**	4163 **325**	4771 **314**
20	299 **528**	931 **512**	1565 **497**	2198 **484**	2825 **472**	3455 **459**	4078 **447**	4692 **435**
25	173 **660**	794 **643**	1426 **626**	2059 **612**	2695 **598**	3332 **583**	3961 **569**	4579 **555**

Flow (GPM)

☐ Cont. ☐ Int.

Intermittent operation rating applies to 10% of every minute.

Fonctionnement interm. 10% max. de chaque minute d`utilisation.

Performance data based on testing using 10W40 oil with a viscosity of 200 SUS at 54° C (130° F.). Performance data is typical. Actual data may vary slightly from one production motor to another.

Les donnees sur les performances sont basees sur des tests utilisant de l'huile 10W40 d'une viscosite de 200 SUS a 54°C (130°F). Ces donnees correspondent a des situations typiques. Les donnees reelles peuvent varier legerement d'un moteur de production a l'autre.

Intermittierende Werte maximal 10% von jeder Betriebsminute.

Capacidad de funcionamiento intermitente valida para 10% por cada minuto.

Leistungsdaten sind gemessen mit SAE 10W40 bei einer Viskositaet von 43,1 Cst bei 54°C. Geringfuegige Abweichungen von den Katalogdaten sind moeglich.

Datos tecnicos obtenidos con aceite 10W40 de 200 SUS de viscosidad a 54°C (130°F). Los datos proporcionados son valores tipcos. Los valores exactos reales podrian tener una pequena variacion entre distintos motores.

WARNING
This product can expose you to chemicals including lead and DEHP, which are known to the State of California to cause cancer, and birth defects or other reproductive harm. For more information go to www.p65warnings.ca.gov

Tel: +45 63 12 83 00 | Email: ps@hymatik.com | www.hymatik.com | Hvidkaervej 27a, DK-5250 Odense SV, Denmark

TGK 0170

169 cm³ / rev (10.3 in³ / rev)

PRESSURE (PSID)

Flow (GPM)	500	1000	1500	2000	2500	3000	3500	4000
.5	620 **9**	1284 **7**	1945 **5**	2613 **4**	3293 **3**	3983 **2**		
1	652 **20**	1337 **18**	2006 **16**	2683 **14**	3375 **12**	4063 **11**	4744 **8**	5402 **8**
2	678 **42**	1390 **40**	2105 **37**	2822 **35**	3535 **32**	4226 **30**	4909 **27**	5587 **25**
3	678 **64**	1397 **61**	2117 **58**	2836 **56**	3554 **53**	4263 **50**	4963 **46**	5652 **44**
4	679 **86**	1409 **83**	2142 **80**	2872 **77**	3596 **74**	4310 **71**	5021 **67**	5716 **64**
5	675 **108**	1413 **104**	2150 **101**	2885 **98**	3616 **94**	4339 **91**	5057 **87**	5761 **83**
7	661 **153**	1405 **148**	2152 **143**	2900 **140**	3642 **136**	4374 **132**	5101 **127**	5818 **123**
9	632 **197**	1385 **191**	2140 **186**	2891 **181**	3638 **177**	4380 **173**	5114 **168**	5838 **163**
12	583 **263**	1334 **256**	2096 **250**	2860 **244**	3617 **239**	4362 **234**	5101 **228**	5823 **223**
15	524 **330**	1275 **322**	2035 **314**	2804 **308**	3572 **302**	4327 **296**	5070 **289**	5801 **283**
20	382 **442**	1143 **432**	1908 **422**	2683 **413**	3455 **406**	4216 **399**	4972 **391**	5714 **383**
25	239 **554**	983 **543**	1747 **531**	2523 **520**	3299 **511**	4071 **501**	4839 **492**	5591 **483**

TORQUE (LB IN) 4839
SPEED (RPM) 492

TGK 0195

195 cm³ / rev (11.9 in³ / rev)

PRESSURE (PSID)

Flow (GPM)	500	1000	1500	2000	2500	3000	3500	4000
.5	733 **7**	1503 **3**						
1	761 **16**	1546 **13**	2326 **8**	3104 **3**				
2	799 **35**	1638 **32**	2465 **27**	3270 **21**	4046 **16**	4813 **11**	5589 **7**	6375 **6**
3	794 **55**	1639 **50**	2476 **45**	3303 **39**	4132 **34**	4970 **28**	5792 **23**	6595 **19**
4	794 **74**	1654 **69**	2509 **64**	3356 **58**	4196 **52**	5023 **46**	5830 **40**	6635 **35**
5	783 **93**	1653 **88**	2517 **83**	3375 **76**	4224 **70**	5065 **64**	5895 **58**	6710 **52**
7	762 **131**	1637 **126**	2514 **120**	3384 **113**	4245 **106**	5098 **99**	5940 **92**	6772 **86**
9	731 **170**	1616 **164**	2499 **157**	3373 **150**	4239 **142**	5093 **135**	5936 **127**	6774 **120**
12	677 **228**	1562 **221**	2455 **213**	3343 **205**	4217 **196**	5081 **188**	5934 **179**	6776 **172**
15	613 **285**	1498 **278**	2389 **269**	3283 **260**	4169 **251**	5040 **242**	5907 **232**	6765 **233**
20	448 **381**	1350 **373**	2245 **363**	3141 **353**	4031 **342**	4919 **331**	5798 **321**	6663 **310**
25	334 **477**	1158 **468**	2044 **457**	2941 **445**	3837 **433**	4729 **421**	5612 **409**	6500 **397**

Cont. Int.

Intermittent operation rating applies to 10% of every minute.

Fonctionnement interm. 10% max. de chaque minute d`utilisation.

Performance data based on testing using 10W40 oil with a viscosity of 200 SUS at 54° C (130° F.). Performance data is typical. Actual data may vary slightly from one production motor to another.

Les donnees sur les performances sont basees sur des tests utilisant de l'huile 10W40 d'une viscosite de 200 SUS a 54°C (130°F). Ces donnees correspondent a des situations typiques. Les donnees reelles peuvent varier legerement d'un moteur de production a l'autre.

Intermittierende Werte maximal 10% von jeder Betriebsminute.

Capacidad de funcionamiento intermitente valida para 10% por cada minuto.

Leistungsdaten sind gemessen mit SAE 10W40 bei einer Viskositaet von 43,1 Cst bei 54°C. Geringfuegige Abweichungen von den Katalogdaten sind moeglich.

Datos tecnicos obtenidos con aceite 10W40 de 200 SUS de viscosidad a 54°C (130°F). Los datos proporcionados son valores tipcos. Los valores exactos reales podrian tener una pequena variacion entre distintos motores.

WARNING
This product can expose you to chemicals including lead and DEHP, which are known to the State of California to cause cancer, and birth defects or other reproductive harm. For more information go to www.p65warnings.ca.gov

TGK 0240

238 cm³ / rev (14.5 in³ / rev)

PRESSURE (PSID)

Flow (GPM)	500	1000	1500	2000	2500	3000	3500	4000
.5	932 **6**	1907 **4**	2894 **2**					
1	960 **14**	1954 **12**	2950 **9**	3943 **6**	4939 **3**	5930 **2**		
2	988 **30**	2031 **27**	3065 **24**	4090 **20**	5107 **17**	6100 **14**	7068 **11**	8037 **9**
3	983 **45**	2029 **42**	3071 **39**	4101 **35**	5128 **31**	6161 **27**	7182 **23**	8184 **20**
4	978 **61**	2037 **58**	3090 **54**	4136 **49**	5176 **45**	6207 **42**	7230 **37**	8234 **33**
5	962 **77**	2030 **73**	3092 **69**	4144 **64**	5190 **60**	6231 **56**	7259 **51**	8271 **47**
7	933 **108**	2005 **104**	3078 **99**	4141 **94**	5194 **89**	6239 **84**	7275 **78**	8298 **73**
9	890 **140**	1972 **135**	3048 **129**	4112 **123**	5169 **117**	6213 **112**	7245 **106**	8271 **100**
12	832 **187**	1912 **181**	2996 **175**	4071 **167**	5125 **161**	6163 **154**	7195 **147**	8224 **140**
15	753 **235**	1832 **228**	2921 **220**	4009 **212**	5081 **204**	6137 **196**	7182 **188**	8212 **180**
20	559 **314**	1654 **306**	2744 **297**	3834 **287**	4917 **278**	5991 **268**	7045 **258**	8081 **248**
25	524 **393**	1427 **384**	2507 **373**	3595 **363**	4690 **352**	5780 **340**	6853 **328**	7913 **317**

TORQUE (LB IN) 5780
SPEED (RPM) 340

TGK 0280

280 cm³ / rev (17.1 in³ / rev)

PRESSURE (PSID)

Flow (GPM)	500	1000	1500	2000	2500	3000	3500	4000
.5	1056 **5**	2177 **4**	3323 **2**	4512 **1**				
1	1087 **12**	2223 **10**	3378 **8**	4552 **6**	5734 **5**	6930 **3**	8135 **3**	9350 **2**
2	1124 **25**	2313 **23**	3513 **21**	4700 **18**	5880 **16**	7060 **14**	8239 **12**	9400 **11**
3	1124 **39**	2323 **36**	3532 **34**	4740 **31**	5940 **28**	7143 **25**	8346 **22**	9536 **19**
4	1126 **52**	2346 **49**	3568 **47**	4786 **43**	6004 **40**	7214 **37**	8415 **33**	9596 **30**
5	1115 **65**	2350 **62**	3582 **59**	4816 **56**	6044 **52**	7256 **49**	8457 **45**	9641 **41**
7	1091 **92**	2338 **88**	3586 **85**	4832 **80**	6072 **76**	7301 **72**	8515 **67**	9706 **63**
9	1046 **118**	2309 **114**	3564 **110**	4811 **105**	6051 **101**	7280 **96**	8499 **90**	9707 **85**
12	981 **159**	2242 **154**	3506 **148**	4757 **143**	5992 **137**	7221 **132**	8444 **125**	9652 **118**
15	898 **199**	2164 **193**	3437 **186**	4702 **180**	5951 **174**	7187 **168**	8416 **160**	9625 **152**
20	691 **266**	1976 **258**	3255 **250**	4529 **243**	5795 **235**	7044 **227**	8275 **218**	9499 **209**
25	703 **334**	1726 **324**	2987 **314**	4260 **305**	5540 **296**	6815 **286**	8071 **276**	9311 **267**

☒ Cont. ☐ Int.

Intermittent operation rating applies to 10% of every minute.

Fonctionnement interm. 10% max. de chaque minute d`utilisation.

Performance data based on testing using 10W40 oil with a viscosity of 200 SUS at 54° C (130° F.). Performance data is typical. Actual data may vary slightly from one production motor to another.

Les donnees sur les performances sont basees sur des tests utilisant de l'huile 10W40 d'une viscosite de 200 SUS a 54°C (130°F). Ces donnees correspondent a des situations typiques. Les donnees reelles peuvent varier legerement d'un moteur de production a l'autre.

Intermittierende Werte maximal 10% von jeder Betriebsminute.

Capacidad de funcionamiento intermitente valida para 10% por cada minuto.

Leistungsdaten sind gemessen mit SAE 10W40 bei einer Viskositaet von 43,1 Cst bei 54°C. Geringfuegige Abweichungen von den Katalogdaten sind moeglich.

Datos tecnicos obtenidos con aceite 10W40 de 200 SUS de viscosidad a 54°C (130°F). Los datos proporcionados son valores tipcos. Los valores exactos reales podrian tener una pequena variacion entre distintos motores.

WARNING
This product can expose you to chemicals including lead and DEHP, which are known to the State of California to cause cancer, and birth defects or other reproductive harm. For more information go to www.p65warnings.ca.gov

Parker Hannifin Corporation
Pump & Motor Division
Greeneville, Tennessee, USA

Tel: +45 63 12 83 00 | Email: ps@hymatik.com | www.hymatik.com | Hvidkaervej 27a, DK-5250 Odense SV, Denmark

TGK 0310

310 cm³ / rev (18.9 in³ / rev)

PRESSURE (PSID)

Flow (GPM)	500	1000	1500	2000	2500	3000	3500	4000
.5	1188 **4**	2464 **3**	3766 **2**	5102 **1**				
1	1220 **11**	2508 **9**	3812 **7**	5145 **5**	6477 **4**	7822 **2**	9181 **2**	10530 **1**
2	1259 **23**	2598 **21**	3950 **19**	5298 **17**	6642 **14**	7972 **13**	9282 **10**	10574 **9**
3	1257 **35**	2606 **33**	3889 **30**	5332 **28**	6688 **25**	8044 **22**	9392 **19**	10693 **16**
4	1259 **47**	2628 **44**	4003 **42**	5377 **39**	6749 **36**	8114 **33**	9461 **29**	10780 **26**
5	1247 **59**	2629 **56**	4252 **52**	5401 **50**	6782 **47**	8149 **42**	9499 **39**	10823 **35**
7	1218 **84**	2614 **80**	4013 **76**	5413 **72**	6806 **68**	8184 **64**	9543 **60**	10874 **56**
9	1167 **107**	2574 **103**	3983 **99**	5386 **94**	6780 **90**	8162 **85**	9529 **80**	10877 **75**
12	1089 **143**	2493 **139**	3904 **133**	5308 **128**	6696 **122**	8075 **117**	9443 **110**	10793 **102**
15	995 **180**	2400 **173**	3817 **167**	5225 **160**	6621 **154**	8003 **148**	9371 **140**	10718 **131**
20	769 **241**	2194 **234**	3618 **225**	5043 **218**	6462 **210**	7863 **203**	9238 **194**	10588 **183**
25	626 **303**	1955 **294**	3359 **284**	4771 **274**	6251 **265**	7608 **256**	8998 **246**	10360 **236**

TORQUE (LB IN) 7608
SPEED (RPM) 256

TGK 0335

337 cm³ / rev (20.6 in³ / rev)

PRESSURE (PSID)

Flow (GPM)	500	1000	1500	2000	2500	3000	3500	4000
.5	1297 **4**	2699 **3**	4128 **1**	5584 **1**				
1	1329 **10**	2741 **8**	4176 **7**	5630 **5**	7084 **4**	8551 **2**	10036 **2**	11496 **1**
2	1369 **21**	2832 **19**	4308 **17**	5787 **15**	7265 **13**	8718 **11**	10136 **9**	11534 **8**
3	1366 **32**	2838 **30**	4326 **27**	5817 **25**	7301 **22**	8781 **20**	10248 **17**	11685 **14**
4	1368 **43**	2858 **40**	4358 **38**	5861 **35**	7358 **32**	8850 **29**	10317 **25**	11748 **22**
5	1355 **54**	2858 **51**	4368 **48**	5880 **45**	7386 **42**	8880 **38**	10352 **34**	11791 **30**
7	1323 **76**	2840 **73**	4363 **69**	5888 **65**	7407 **61**	8908 **57**	10384 **53**	11829 **47**
9	1266 **98**	2791 **94**	4326 **90**	5856 **85**	7376 **81**	8884 **76**	10372 **71**	11834 **64**
12	1177 **131**	2698 **127**	4230 **121**	5759 **116**	7273 **110**	8773 **105**	10261 **98**	11726 **90**
15	1075 **165**	2594 **159**	4127 **153**	5654 **146**	7170 **140**	8670 **134**	10153 **126**	11613 **116**
20	833 **221**	2372 **214**	3915 **205**	5463 **197**	7008 **189**	8533 **182**	10026 **173**	11479 **161**
25	678 **277**	2142 **269**	3663 **259**	5189 **248**	6726 **239**	8257 **230**	9757 **219**	11219 **209**

Cont. Int.

Intermittent operation rating applies to 10% of every minute.

Fonctionnement interm. 10% max. de chaque minute d`utilisation.

Performance data based on testing using 10W40 oil with a viscosity of 200 SUS at 54° C (130° F.). Performance data is typical. Actual data may vary slightly from one production motor to another.

Les donnees sur les performances sont basees sur des tests utilisant de l'huile 10W40 d'une viscosite de 200 SUS a 54°C (130°F). Ces donnees correspondent a des situations typiques. Les donnees reelles peuvent varier legerement d'un moteur de production a l'autre.

Intermittierende Werte maximal 10% von jeder Betriebsminute.

Capacidad de funcionamiento intermitente valida para 10% por cada minuto.

Leistungsdaten sind gemessen mit SAE 10W40 bei einer Viskositaet von 43,1 Cst bei 54°C. Geringfuegige Abweichungen von den Katalogdaten sind moeglich.

Datos tecnicos obtenidos con aceite 10W40 de 200 SUS de viscosidad a 54°C (130°F). Los datos proporcionados son valores tipcos. Los valores exactos reales podrian tener una pequena variacion entre distintos motores.

WARNING
This product can expose you to chemicals including lead and DEHP, which are known to the State of California to cause cancer, and birth defects or other reproductive harm. For more information go to www.p65warnings.ca.gov

Parker Hannifin Corporation
Pump & Motor Division
Greeneville, Tennessee, USA

Tel: +45 63 12 83 00 | Email: ps@hymatik.com | www.hymatik.com | Hvidkaervej 27a, DK-5250 Odense SV, Denmark

TGK 0360

360 cm³ / rev (22.2 in³ / rev)

PRESSURE (PSID)

Flow (GPM)	500	1000	1500	2000	2500	3000	3500	4000
.5	1386 **4**	2883 **3**	4410 **1**	5965 **1**				
1	1420 **9**	2928 **7**	4461 **7**	6014 **5**	7567 **4**	9135 **2**	10721 **2**	12281 **1**
2	1462 **20**	3025 **18**	4602 **16**	6182 **14**	7761 **12**	9313 **10**	10828 **8**	12321 **7**
3	1459 **30**	3031 **28**	4621 **25**	6214 **23**	7799 **21**	9380 **19**	10947 **16**	12482 **13**
4	1461 **40**	3053 **37**	4655 **36**	6261 **33**	7884 **30**	9454 **27**	11021 **23**	12550 **21**
5	1447 **51**	3053 **48**	4666 **45**	6281 **42**	7890 **39**	9486 **36**	11059 **32**	12596 **28**
7	1413 **71**	3034 **68**	4661 **65**	6290 **61**	7913 **57**	9516 **53**	11093 **50**	12636 **44**
9	1352 **92**	2981 **88**	4621 **84**	6256 **80**	7879 **76**	9490 **71**	11080 **66**	12642 **60**
12	1257 **123**	2882 **119**	4519 **113**	6152 **109**	7769 **103**	9372 **98**	10961 **92**	12526 **84**
15	1148 **154**	2771 **149**	4409 **143**	6040 **137**	7659 **131**	9262 **125**	10846 **118**	12406 **109**
20	890 **207**	2534 **200**	4182 **192**	5836 **184**	7486 **177**	9115 **170**	10710 **162**	12262 **151**
25	724 **259**	2288 **252**	3913 **242**	5543 **232**	7185 **224**	8821 **215**	10423 **205**	11985 **196**

TORQUE (LB IN) 8821
SPEED (RPM) 215

TGK 0405

405 cm³ / rev (24.7 in³ / rev)

PRESSURE (PSID)

Flow (GPM)	500	1000	1500	2000	2500	3000	3500	4000
.5	1544 **4**	3178 **3**	4840 **2**	6515 **1**	8185 **1**			
1	1593 **8**	3256 **7**	4928 **6**	6607 **6**	8303 **5**	9987 **4**	11652 **3**	
2	1636 **17**	3351 **16**	5084 **15**	6817 **14**	8550 **13**	10272 **12**	11978 **11**	13575 **10**
3	1637 **27**	3365 **25**	5106 **23**	6847 **22**	8588 **21**	10314 **19**	12031 **18**	13674 **16**
4	1645 **36**	3394 **34**	5159 **32**	6920 **30**	8668 **29**	10402 **27**	12130 **26**	13858 **24**
5	1640 **45**	3408 **43**	5201 **41**	6983 **39**	8733 **37**	10466 **35**	12194 **33**	13989 **31**
7	1606 **64**	3396 **61**	5211 **59**	7003 **56**	8772 **54**	10527 **51**	12271 **49**	14306 **46**
9	1551 **82**	3350 **80**	5176 **77**	6981 **73**	8763 **70**	10519 **67**	12269 **64**	14077 **61**
12	1428 **110**	3238 **107**	5075 **103**	6888 **99**	8670 **95**	10424 **91**	12172 **88**	14015 **84**
15	1310 **138**	3112 **135**	4948 **130**	6759 **125**	8545 **120**	10306 **115**	12060 **111**	13910 **106**
20	1136 **185**	2862 **181**	4692 **175**	6518 **168**	8336 **162**	10122 **156**	11877 **151**	13717 **145**
25			4492 **219**	6303 **212**	8084 **204**	9848 **197**	11585 **190**	13408 **184**

Cont. Int.

Intermittent operation rating applies to 10% of every minute.

Fonctionnement interm. 10% max. de chaque minute d`utilisation.

Performance data based on testing using 10W40 oil with a viscosity of 200 SUS at 54° C (130° F.). Performance data is typical. Actual data may vary slightly from one production motor to another.

Les donnees sur les performances sont basees sur des tests utilisant de l'huile 10W40 d'une viscosite de 200 SUS a 54°C (130°F). Ces donnees correspondent a des situations typiques. Les donnees reelles peuvent varier legerement d'un moteur de production a l'autre.

Intermittierende Werte maximal 10% von jeder Betriebsminute.

Capacidad de funcionamiento intermitente valida para 10% por cada minuto.

Leistungsdaten sind gemessen mit SAE 10W40 bei einer Viskositaet von 43,1 Cst bei 54°C. Geringfuegige Abweichungen von den Katalogdaten sind moeglich.

Datos tecnicos obtenidos con aceite 10W40 de 200 SUS de viscosidad a 54°C (130°F). Los datos proporcionados son valores tipcos. Los valores exactos reales podrian tener una pequena variacion entre distintos motores.

WARNING
This product can expose you to chemicals including lead and DEHP, which are known to the State of California to cause cancer, and birth defects or other reproductive harm. For more information go to www.p65warnings.ca.gov

Performance Data / Leistungsdaten
Puissance / Datos Tecnicos

Low Speed High Torque Torqmotors™
TGK Series / Serie / Série HY13-1590-011/US,EU

TGK 0475

477 cm³ / rev (29.1 in³ / rev)

PRESSURE (PSID)

Flow (GPM)	500	1000	1500	2000	2500	3000	3500	4000
.5	1768 **3**	3732 **3**	5733 **2**	7744 **1**	9762 **1**			
1	1868 **7**	3878 **7**	5879 **6**	7851 **5**	9838 **4**	11830 **3**		
2	1964 **15**	4055 **14**	6180 **14**	8237 **12**	10241 **10**	12136 **8**	14283 **5**	16325 **2**
3	1972 **23**	4074 **22**	6208 **21**	8321 **19**	10379 **17**	12355 **13**	14513 **9**	16597 **4**
4	2005 **31**	4135 **30**	6287 **29**	8382 **27**	10463 **24**	12496 **20**	14648 **15**	16749 **9**
5	2004 **39**	4129 **38**	6304 **37**	8428 **34**	10514 **31**	12544 **26**	14719 **20**	16832 **13**
7	1990 **55**	4133 **54**	6308 **52**	8445 **50**	10555 **45**	12602 **40**	14795 **32**	16913 **23**
9	1924 **70**	4104 **69**	6285 **68**	8430 **65**	10528 **60**	12608 **54**	14797 **45**	16935 **35**
12	1775 **94**	3974 **93**	6157 **91**	8328 **87**	10446 **82**	12528 **75**	14736 **65**	16890 **54**
15	1619 **118**	3784 **116**	5990 **114**	8188 **110**	10311 **104**	12372 **96**	14598 **85**	16757 **72**
20	1314 **157**	3373 **156**	5629 **153**	7853 **149**	10038 **141**	12145 **132**	14363 **119**	16545 **102**
25	1141 **197**	3029 **196**	5220 **193**	7427 **189**	9629 **182**	11757 **174**	13876 **163**	16021 **151**
30	606 **237**	2505 **236**	4649 **233**	6766 **230**	8878 **224**	10989 **219**	13047 **212**	15138 **204**

TORQUE (LB IN) 6766
SPEED (RPM) 230

TGK 0530

528 cm³ / rev (32.2 in³ / rev)

PRESSURE (PSID)

Flow (GPM)	500	1000	1500	2000	2500	3000	3250	3750
.5	2080 **3**	4256 **3**	6479 **2**	8726 **2**	11012 **1**			
1	2158 **7**	4372 **6**	6592 **6**	8779 **5**	10994 **4**			
2	2246 **14**	4567 **13**	6869 **12**	9126 **11**	11376 **9**			
3	2242 **21**	4578 **20**	6916 **19**	9237 **17**	11500 **14**	13847 **12**	15006 **10**	17323 **7**
4	2253 **28**	4625 **27**	6977 **25**	9296 **23**	11586 **20**	13949 **17**	15115 **15**	17449 **11**
5	2235 **35**	4629 **34**	7002 **32**	9333 **29**	11626 **26**	14011 **22**	15185 **20**	17534 **15**
7	2182 **49**	4599 **48**	7006 **46**	9362 **42**	11659 **38**	14077 **33**	15263 **30**	17634 **23**
9	2095 **63**	4535 **62**	6960 **59**	9330 **55**	11650 **50**	14086 **43**	15281 **39**	17671 **30**
12	1943 **85**	4390 **83**	6825 **80**	9217 **75**	11549 **69**	13997 **62**	15198 **57**	17602 **46**
15	1753 **106**	4199 **104**	6638 **100**	9052 **95**	11408 **87**	13859 **79**	15067 **74**	17483 **63**
20	1327 **141**	3783 **139**	6262 **135**	8701 **129**	11086 **120**	13563 **110**	14784 **104**	17228 **90**
25	1011 **177**	3300 **175**	5751 **171**	8210 **165**	10639 **158**	13032 **149**	14240 **144**	16656 **132**
30	269 **213**	2698 **211**	5083 **208**	7415 **203**	9814 **197**	12198 **188**	13388 **183**	15769 **173**

Flow (GPM)

☐ Cont. ☐ Int.

Intermittent operation rating applies to 10% of every minute.

Fonctionnement interm. 10% max. de chaque minute d`utilisation.

Performance data based on testing using 10W40 oil with a viscosity of 200 SUS at 54° C (130° F.). Performance data is typical. Actual data may vary slightly from one production motor to another.

Les donnees sur les performances sont basees sur des tests utilisant de l'huile 10W40 d'une viscosite de 200 SUS a 54°C (130°F). Ces donnees correspondent a des situations typiques. Les donnees reelles peuvent varier legerement d'un moteur de production a l'autre.

Intermittierende Werte maximal 10% von jeder Betriebsminute.

Capacidad de funcionamiento intermitente valida para 10% por cada minuto.

Leistungsdaten sind gemessen mit SAE 10W40 bei einer Viskositaet von 43,1 Cst bei 54°C. Geringfuegige Abweichungen von den Katalogdaten sind moeglich.

Datos tecnicos obtenidos con aceite 10W40 de 200 SUS de viscosidad a 54°C (130°F). Los datos proporcionados son valores tipcos. Los valores exactos reales podrian tener una pequena variacion entre distintos motores.

⚠ **WARNING**
This product can expose you to chemicals including lead and DEHP, which are known to the State of California to cause cancer, and birth defects or other reproductive harm. For more information go to www.p65warnings.ca.gov

Parker Hannifin Corporation
Pump & Motor Division
Greeneville, Tennessee, USA

TGK 0625

623 cm³ / rev (38.0 in³ / rev)

PRESSURE (PSID)

Flow (GPM)	500	1000	1500	1750	2000	2500	2750	3250
.5	1939 **2**	4593 **1**						
1	2087 **5**	4665 **3**	7283 **2**	8680 **2**				
2	2338 **11**	4991 **9**	7590 **8**	8853 **7**				
3	2386 **17**	5101 **15**	7753 **13**	9055 **12**	10383 **11**	13039 **7**	14367 **5**	17022 **1**
4	2457 **23**	5202 **21**	7872 **19**	9174 **17**	10487 **15**	13147 **11**	14477 **9**	17137 **4**
5	2479 **29**	5246 **27**	7943 **25**	9242 **23**	10551 **21**	13221 **15**	14557 **12**	17227 **5**
7	2464 **41**	5273 **39**	7995 **36**	9306 **34**	10605 **31**	13292 **24**	14636 **20**	17324 **11**
9	2401 **53**	5223 **51**	7993 **48**	9337 **45**	10653 **42**	13382 **36**	14747 **33**	17476 **26**
12	2254 **71**	5092 **69**	7886 **65**	9239 **62**	10585 **58**	13345 **49**	14725 **44**	17484 **33**
15	2052 **89**	4901 **87**	7721 **83**	9086 **80**	10439 **75**	13219 **64**	14608 **57**	17387 **42**
20	1600 **120**	4490 **117**	7334 **112**	8725 **109**	10088 **104**	12900 **92**	14305 **86**	17117 **72**
25	1063 **151**	3933 **148**	6818 **144**	8235 **140**	9634 **136**	12484 **125**	13909 **118**	16758 **103**
30	359 **182**	3250 **180**	6074 **176**	7443 **172**	8830 **168**	11636 **162**	13039 **158**	15845 **151**

TORQUE (LB IN) 7443
SPEED (RPM) 172

TGK 0785

786 cm³ / rev (48.0 in³ / rev)

PRESSURE (PSID)

Flow (GPM)	500	1000	1500	2000	2200	2700
.5	2910 **2**	6153 **2**	9607 **1**	12950 **1**		
1	3011 **4**	6296 **4**	9670 **3**	12919 **3**		
2	3217 **9**	6536 **8**	9935 **7**	13060 **6**		
3	3220 **14**	6613 **13**	9977 **11**	13079 **9**	14481 **8**	17775 **5**
4	3265 **19**	6679 **17**	10021 **15**	13078 **13**	14489 **12**	17767 **9**
5	3263 **23**	6703 **22**	10047 **19**	13103 **16**	14523 **15**	17810 **12**
7	3218 **33**	6722 **31**	10068 **28**	13062 **24**	14514 **22**	17802 **17**
9	3107 **43**	6664 **41**	10108 **36**	13185 **31**	14665 **28**	18033 **21**
12	2892 **57**	6489 **55**	9959 **49**	13082 **42**	14573 **38**	17977 **29**
15	2643 **71**	6238 **69**	9733 **62**	12938 **54**	14420 **50**	17858 **41**
20	2044 **95**	5673 **92**	9239 **85**	12636 **75**	14113 **70**	17647 **58**
25	2313 **119**	4976 **117**	8571 **110**	12073 **101**	13490 **97**	17021 **86**
30	496 **143**	4104 **141**	7582 **137**	11024 **130**	12463 **127**	15969 **120**

☒ Cont. ☐ Int.

Intermittent operation rating applies to 10% of every minute.

Fonctionnement interm. 10% max. de chaque minute d`utilisation.

Performance data based on testing using 10W40 oil with a viscosity of 200 SUS at 54° C (130° F.). Performance data is typical. Actual data may vary slightly from one production motor to another.

Les donnees sur les performances sont basees sur des tests utilisant de l'huile 10W40 d'une viscosite de 200 SUS a 54°C (130°F). Ces donnees correspondent a des situations typiques. Les donnees reelles peuvent varier legerement d'un moteur de production a l'autre.

Intermittierende Werte maximal 10% von jeder Betriebsminute.

Capacidad de funcionamiento intermitente valida para 10% por cada minuto.

Leistungsdaten sind gemessen mit SAE 10W40 bei einer Viskositaet von 43,1 Cst bei 54°C. Geringfuegige Abweichungen von den Katalogdaten sind moeglich.

Datos tecnicos obtenidos con aceite 10W40 de 200 SUS de viscosidad a 54°C (130°F). Los datos proporcionados son valores tipcos. Los valores exactos reales podrian tener una pequena variacion entre distintos motores.

⚠ WARNING
This product can expose you to chemicals including lead and DEHP, which are known to the State of California to cause cancer, and birth defects or other reproductive harm. For more information go to www.p65warnings.ca.gov

Parker Hannifin Corporation
Pump & Motor Division
Greeneville, Tennessee, USA

Tel: +45 63 12 83 00 | Email: ps@hymatik.com | www.hymatik.com | Hvidkaervej 27a, DK-5250 Odense SV, Denmark

TGK 0960

959 cm³ / rev (58.5 in³ / rev)

PRESSURE (PSID)

Flow (GPM)	500	1000	1500	1800	2300
.5	3692 **2**	7712 **1**	11750 **1**		
1	3788 **3**	7858 **3**	11895 **3**		
2	3900 **7**	8045 **7**	12058 **6**		
3	3905 **11**	8078 **11**	12135 **10**	14623 **9**	18738 **7**
4	3939 **15**	8155 **14**	12210 **13**	14718 **12**	18854 **10**
5	3923 **19**	8173 **18**	12238 **17**	14763 **16**	18921 **14**
7	3860 **27**	8160 **26**	12262 **24**	14816 **22**	19017 **19**
9	3733 **35**	8074 **34**	12224 **31**	14803 **28**	19049 **23**
12	3475 **47**	7848 **45**	12062 **42**	14665 **39**	18958 **33**
15	3149 **58**	7545 **57**	11823 **53**	14445 **50**	18782 **45**
20	2437 **78**	6843 **76**	11227 **72**	13854 **68**	18234 **62**
25	2969 **98**	5990 **96**	10360 **92**	12921 **88**	17226 **80**
30	603 **118**	4919 **117**	9170 **113**	11751 **109**	16034 **102**

TORQUE (LB IN) 9170
SPEED (RPM) 113

☐ Cont. ☐ Int.

Intermittent operation rating applies to 10% of every minute.

Fonctionnement interm. 10% max. de chaque minute d`utilisation.

Performance data based on testing using 10W40 oil with a viscosity of 200 SUS at 54° C (130° F.). Performance data is typical. Actual data may vary slightly from one production motor to another.

Les donnees sur les performances sont basees sur des tests utilisant de l'huile 10W40 d'une viscosite de 200 SUS a 54°C (130°F). Ces donnees correspondent a des situations typiques. Les donnees reelles peuvent varier legerement d'un moteur de production a l'autre.

Intermittierende Werte maximal 10% von jeder Betriebsminute.

Capacidad de funcionamiento intermitente valida para 10% por cada minuto.

Leistungsdaten sind gemessen mit SAE 10W40 bei einer Viskositaet von 43,1 Cst bei 54°C. Geringfuegige Abweichungen von den Katalogdaten sind moeglich.

Datos tecnicos obtenidos con aceite 10W40 de 200 SUS de viscosidad a 54°C (130°F). Los datos proporcionados son valores tipcos. Los valores exactos reales podrian tener una pequena variacion entre distintos motores.

WARNING
This product can expose you to chemicals including lead and DEHP, which are known to the State of California to cause cancer, and birth defects or other reproductive harm. For more information go to www.p65warnings.ca.gov

Tel: +45 63 12 83 00 | Email: ps@hymatik.com | www.hymatik.com | Hvidkaervej 27a, DK-5250 Odense SV, Denmark

Flange Mount / Standardgehäuse
Monture à bride(s) / Montaje de brida

Side Load - N (lbs)

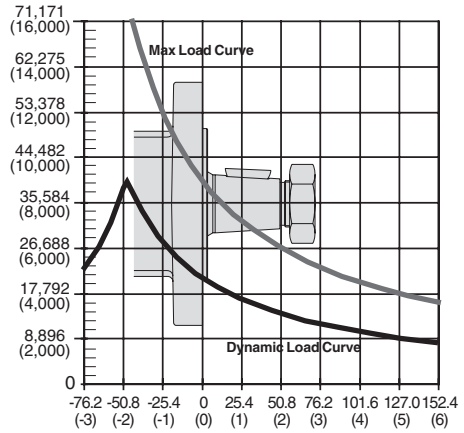

Distance from Mounting Face - mm (in)
Motor Image Not To Scale

The dynamic side load curve is based on uni-directional steady state loads for L_{10} bearing life at 3 x 10^6 revolutions.
Die zulässige auslegbare radiale Wellenbelastungskurve ist unter ruhenden, einseitig statisch gerichteten Lastverhältnissen auf eine L_{10} Lebensdauer mit 3 x 10^6 Umdrehungen kalkuliert.
La courbe de charge latérale permise se base sur des charges unidirectionnelles en régime permanent pour le roulement L_{10} à 3 x 10^6 révolutions.
La curva de valores admisibles de carga lateral está basada en cargas constantes para cojinetes L_{10} a 3 x 10^6 revoluciones.

Wheel Mount / Radnabengehäuse
Monture à roue/ Montaje de rueda

Side Load - N (lbs)

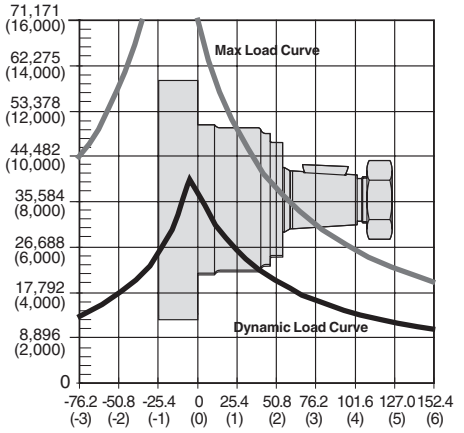

Distance from Mounting Face - mm (in)
Motor Image Not To Scale

The maximum load curve is defined by bearing static load capacity. This curve should not be exceeded at any time including shock loads.
Die maximale radiale Wellenbelastungskurve ist definiert als maximale statische Last ohne Drehzahl. Sie gilt als Grenze und sollte keinesfalls überschritten werden.
La courbe de charge maximale est définie par la capacité de charge statique portante. Cette courbe ne devrait être dépassée en aucun moment y compris pour les charges par à-coups.
La curva de carga máxima queda definida por la capacidad de carga estática del cojinete. No se deben superar los valores de esta curva, ni siquiera con cargas provisorias de impacto.

Equation to Calculate the Expected Radial Bearing Life
Gleichung zur Ermittlung der Lagerlebensdauer

Equation to calculate the dynamic bearing life for a given load:
Bestimmung der erlaubten radialen Wellenbelastung mit vorgegebener Last

Use F_a, F_b and S in equation to determine hours of L_{10} bearing life.
Die Lebensdauer in Stunden ergibt sich durch einsetzen von F_a, F_b, und S in die nachstehende Formel.

$$L = \frac{3 \times 10^6}{60 \times S} \left\{ \frac{F_a}{F_b} \right\}^{3.33}$$

Where / Mit:

S = Shaft Speed RPM / Abtriebswellendrehzahl in min^{-1}
L = Life In Hours / Lebensdauer in Stunden
F_a = Dynamic side load defined by above curve at a distance from mounting flange. / Erlaubte radiale Wellenbelastung als Function der Laenge
F_b = Application side load. / Anwendungsseitige Wellenbelastung

Note: Calculations are based on L_{10} bearing life per ISO 281.
Auslegung basiert auf einer L_{10} Lenbendauer nach ISO 281.

WARNING
This product can expose you to chemicals including lead and DEHP, which are known to the State of California to cause cancer, and birth defects or other reproductive harm. For more information go to www.p65warnings.ca.gov

Tel: +45 63 12 83 00 | Email: ps@hymatik.com | www.hymatik.com | Hvidkaervej 27a, DK-5250 Odense SV, Denmark

Code: AM

SAE A 2-Bolt, 5/16-18 UNC Manifold

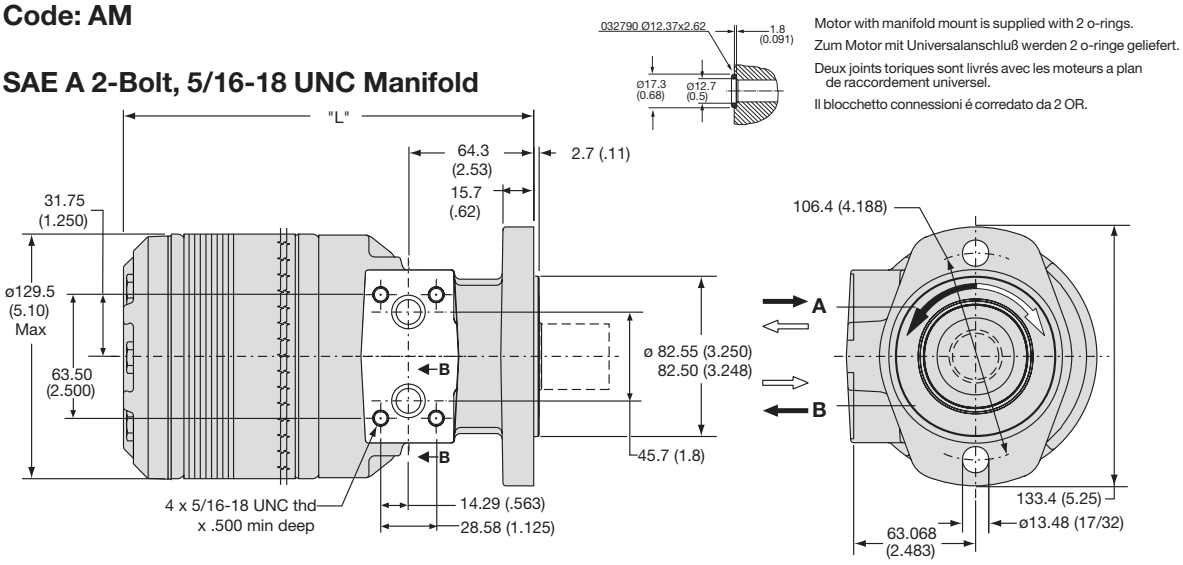

Motor with manifold mount is supplied with 2 o-rings.
Zum Motor mit Universalanschluß werden 2 o-ringe geliefert.
Deux joints toriques sont livrés avec les moteurs a plan de raccordement universel.
Il blocchetto connessioni é corredato da 2 OR.

Code AM	disp	0110	0140	0170	0195	0240	0280	0310	0335	0360	0405	0475	0530	0625	0785	0960
Weight/Gewicht	**kg**	**13.7**	**14.1**	**14.3**	**14.5**	**14.8**	**15.2**	**15.4**	**15.5**	**15.8**	**16.1**	**16.6**	**17.3**	**18.0**	**19.8**	**20.8**
Poids/Peso	(lb)	(30.1)	(31.0)	(31.5)	(32.0)	(32.7)	(33.5)	(33.9)	(34.2)	(34.8)	(35.4)	(36.7)	(38.1)	(39.6)	(43.6)	(45.9)
Length	**"L" mm**	**190.2**	**193.3**	**196.1**	**198.6**	**202.4**	**206.8**	**209.8**	**212.3**	**215.6**	**218.7**	**225.8**	**230.9**	**239.8**	**256.0**	**272.5**
	"L" (in)	(7.49)	(7.61)	(7.72)	(7.82)	(7.97)	(8.14)	(8.26)	(8.36)	(8.49)	(8.61)	(8.89)	(9.09)	(9.44)	(10.08)	(10.73)

Code: AS

SAE A 2-Bolt, 7/8-14 SAE

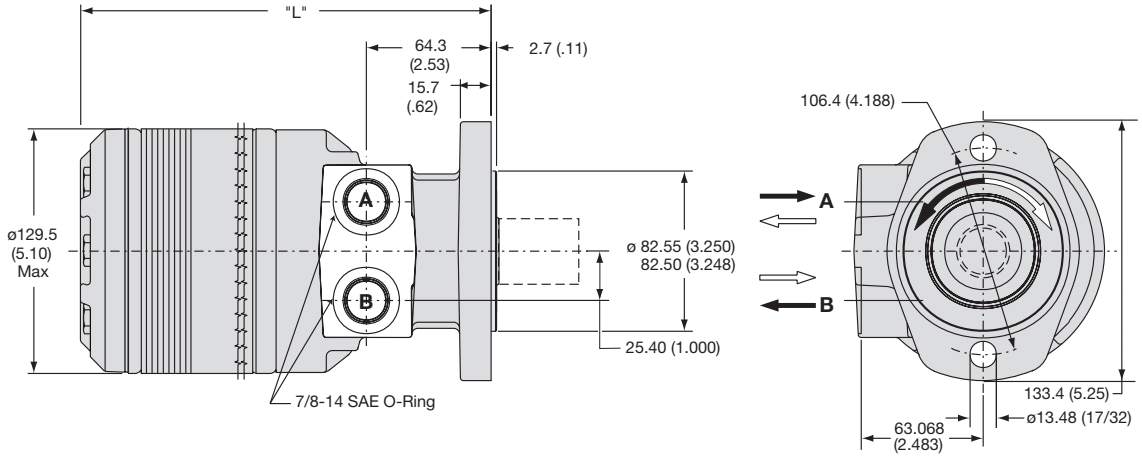

Code AS	disp	0110	0140	0170	0195	0240	0280	0310	0335	0360	0405	0475	0530	0625	0785	0960
Weight/Gewicht	**kg**	**13.7**	**14.1**	**14.3**	**14.5**	**14.8**	**15.2**	**15.4**	**15.5**	**15.8**	**16.1**	**16.6**	**17.3**	**18.0**	**19.8**	**20.8**
Poids/Peso	(lb)	(30.1)	(31.0)	(31.5)	(32.0)	(32.7)	(33.5)	(33.9)	(34.2)	(34.8)	(35.4)	(36.7)	(38.1)	(39.6)	(43.6)	(45.9)
Length	**"L" mm**	**190.2**	**193.3**	**196.1**	**198.6**	**202.4**	**206.8**	**209.8**	**212.3**	**215.6**	**218.7**	**225.8**	**230.9**	**239.8**	**256.0**	**272.5**
	"L" (in)	(7.49)	(7.61)	(7.72)	(7.82)	(7.97)	(8.14)	(8.26)	(8.36)	(8.49)	(8.61)	(8.89)	(9.09)	(9.44)	(10.08)	(10.73)

English equivalents for metric specifications are shown in ( ).

WARNING
This product can expose you to chemicals including lead and DEHP, which are known to the State of California to cause cancer, and birth defects or other reproductive harm. For more information go to www.p65warnings.ca.gov

Tel: +45 63 12 83 00 | Email: ps@hymatik.com | www.hymatik.com | Hvidkaervej 27a, DK-5250 Odense SV, Denmark

Code: LS

Wheel, Front Brake Nose, 7/8-14 SAE

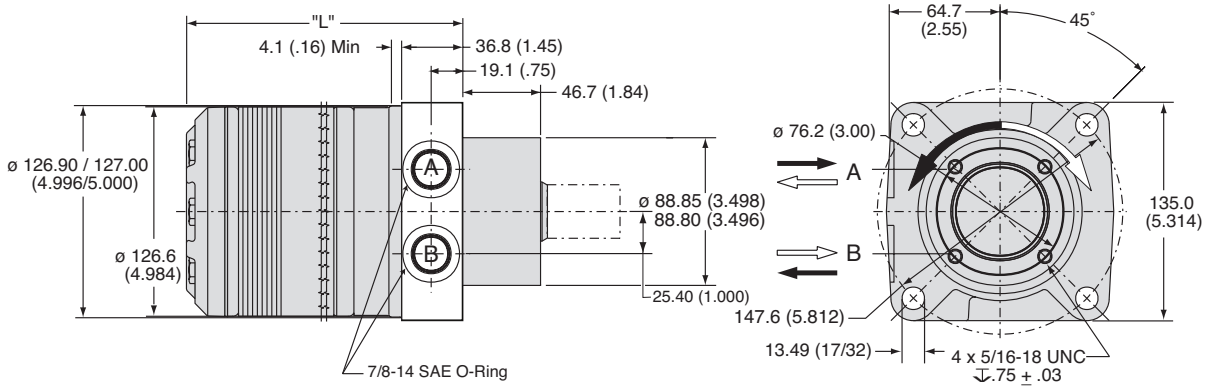

Code LS disp	0110	0140	0170	0195	0240	0280	0310	0335	0360	0405	0475	0530	0625	0785	0960
Weight/Gewicht kg	**14.0**	**14.4**	**14.6**	**14.9**	**15.2**	**15.6**	**15.7**	**15.8**	**16.1**	**16.4**	**16.5**	**17.6**	**18.3**	**19.7**	**21.1**
Poids/Peso (lb)	(30.9)	(31.8)	(32.2)	(32.8)	(33.5)	(34.3)	(34.7)	(34.9)	(35.4)	(36.2)	(36.4)	(38.9)	(40.3)	(43.4)	(46.6)
Length "L" mm	**145.0**	**148.1**	**150.6**	**153.4**	**157.2**	**161.5**	**164.6**	**167.1**	**170.4**	**173.5**	**180.6**	**185.7**	**194.6**	**210.8**	**227.3**
"L" (in)	(5.71)	(5.83)	(5.93)	(6.04)	(6.19)	(6.36)	(6.48)	(6.58)	(6.71)	(6.83)	(7.11)	(7.31)	(7.66)	(8.30)	(8.95)

Code: MS

Magneto, 7/8-14 SAE

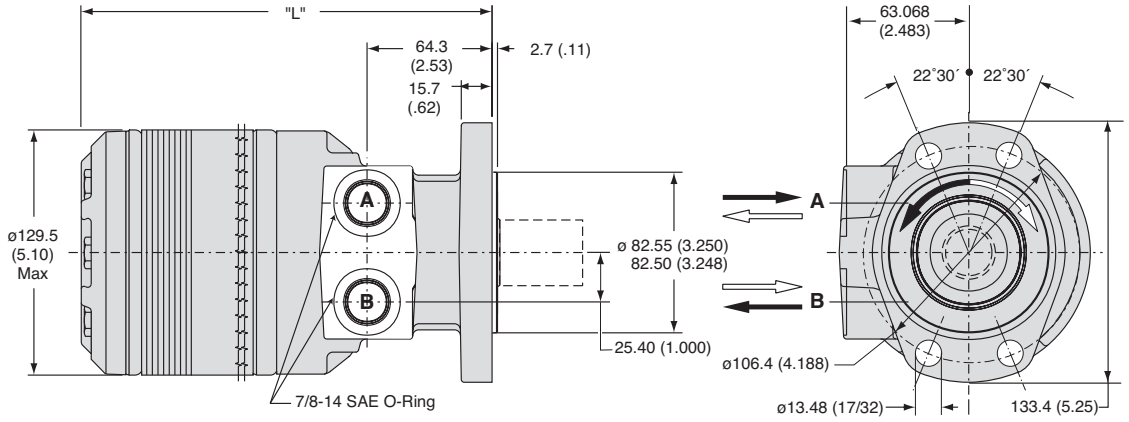

Code MS disp	0110	0140	0170	0195	0240	0280	0310	0335	0360	0405	0475	0530	0625	0785	0960
Weight/Gewicht kg	**13.7**	**14.1**	**14.3**	**14.5**	**14.8**	**15.2**	**15.4**	**15.5**	**15.8**	**16.1**	**16.6**	**17.3**	**18.0**	**19.8**	**20.8**
Poids/Peso (lb)	(30.1)	(31.0)	(31.5)	(32.0)	(32.7)	(33.5)	(33.9)	(34.2)	(34.8)	(35.4)	(36.7)	(38.1)	(39.6)	(43.6)	(45.9)
Length "L" mm	**190.2**	**193.3**	**196.1**	**198.6**	**202.4**	**206.8**	**209.8**	**212.3**	**215.6**	**218.7**	**225.8**	**230.9**	**239.8**	**256.0**	**272.5**
"L" (in)	(7.49)	(7.61)	(7.72)	(7.82)	(7.97)	(8.14)	(8.26)	(8.36)	(8.49)	(8.61)	(8.89)	(9.09)	(9.44)	(10.08)	(10.73)

English equivalents for metric specifications are shown in ( ).

WARNING
This product can expose you to chemicals including lead and DEHP, which are known to the State of California to cause cancer, and birth defects or other reproductive harm. For more information go to www.p65warnings.ca.gov

Tel: +45 63 12 83 00 | Email: ps@hymatik.com | www.hymatik.com | Hvidkaervej 27a, DK-5250 Odense SV, Denmark

Code: BS

SAE B 2-Bolt, 7/8-14 SAE O-Ring

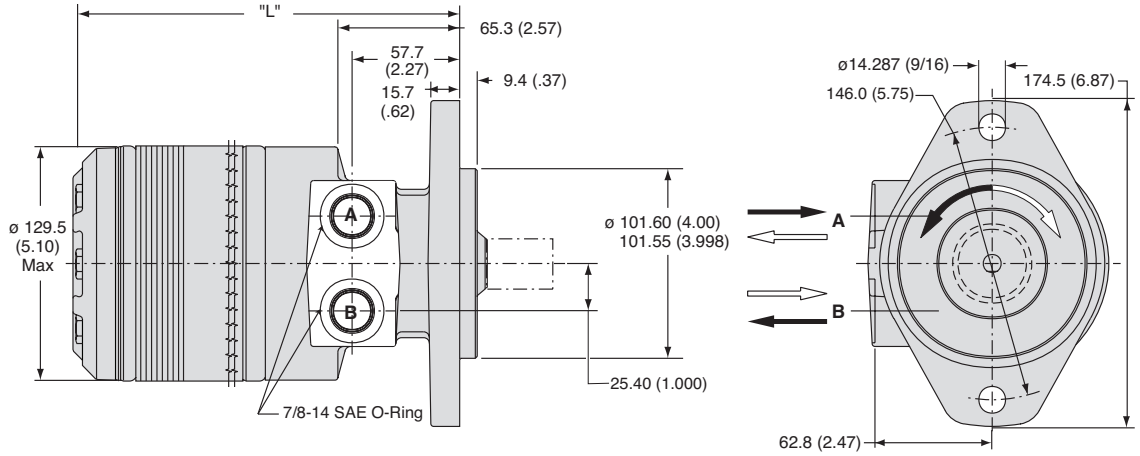

Code BS disp		0110	0140	0170	0195	0240	0280	0310	0335	0360	0405	0475	0530	0625	0785	0960
Weight/Gewicht	**kg**	**14.3**	**14.7**	**14.9**	**15.1**	**15.5**	**15.8**	**16.0**	**16.1**	**16.4**	**16.7**	**17.3**	**17.9**	**18.6**	**20.0**	**21.5**
Poids/Peso	(lb)	(31.5)	(32.4)	(32.9)	(33.4)	(34.1)	(34.9)	(35.3)	(35.6)	(36.2)	(36.8)	(38.1)	(39.5)	(41.0)	(44.0)	(47.3)
Length	**"L" mm**	**190.2**	**193.3**	**196.1**	**198.6**	**202.4**	**206.8**	**209.8**	**212.3**	**215.6**	**218.7**	**225.8**	**230.9**	**239.8**	**256.0**	**272.5**
	"L" (in)	(7.49)	(7.61)	(7.72)	(7.82)	(7.97)	(8.14)	(8.26)	(8.36)	(8.49)	(8.61)	(8.89)	(9.09)	(9.44)	(10.08)	(10.73)

Code: US

Wheel, Standard, 7/8-14 SAE

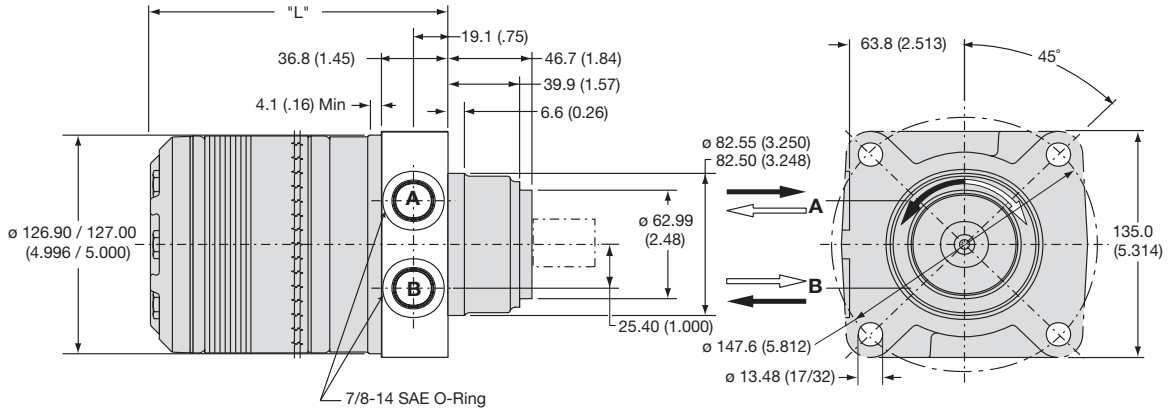

Code US disp		0110	0140	0170	0195	0240	0280	0310	0335	0360	0405	0475	0530	0625	0785	0960
Weight/Gewicht	**kg**	**14.0**	**14.4**	**14.6**	**14.9**	**15.2**	**15.6**	**15.7**	**15.8**	**16.1**	**16.4**	**16.5**	**17.6**	**18.3**	**19.7**	**21.1**
Poids/Peso	(lb)	(30.9)	(31.8)	(32.2)	(32.8)	(33.5)	(34.3)	(34.7)	(34.9)	(35.4)	(36.2)	(36.4)	(38.9)	(40.3)	(43.4)	(46.6)
Length	**"L" mm**	**145.0**	**148.1**	**150.6**	**153.4**	**157.2**	**161.5**	**164.6**	**167.1**	**170.4**	**173.5**	**180.6**	**185.7**	**194.6**	**210.8**	**227.3**
	"L" (in)	(5.71)	(5.83)	(5.93)	(6.04)	(6.19)	(6.36)	(6.48)	(6.58)	(6.71)	(6.83)	(7.11)	(7.31)	(7.66)	(8.30)	(8.95)

English equivalents for metric specifications are shown in ( ).

WARNING
This product can expose you to chemicals including lead and DEHP, which are known to the State of California to cause cancer, and birth defects or other reproductive harm. For more information go to www.p65warnings.ca.gov

Parker Hannifin Corporation
Pump & Motor Division
Greeneville, Tennessee, USA

Tel: +45 63 12 83 00 | Email: ps@hymatik.com | www.hymatik.com | Hvidkaervej 27a, DK-5250 Odense SV, Denmark

Code: WE

Wheel, Optional, Manifold Rear Port

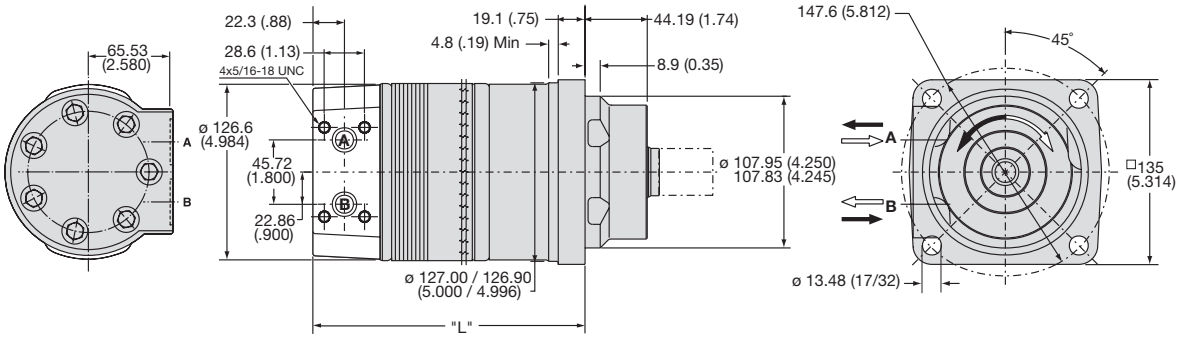

Code WE disp		0110	0140	0170	0195	0240	0280	0310	0335	0360	0405	0475	0530	0625	0785	0960
Weight/Gewicht	**kg**	**17.0**	**17.4**	**17.6**	**17.8**	**18.1**	**18.5**	**18.7**	**18.8**	**19.1**	**19.4**	**19.6**	**20.6**	**21.3**	**22.6**	**24.1**
Poids/Peso	(lb)	(37.4)	(38.3)	(38.8)	(39.3)	(40.0)	(40.8)	(41.2)	(41.5)	(42.1)	(42.7)	(44.0)	(45.4)	(46.9)	(49.9)	(53.2)
Length	**"L" mm**	**172.2**	**175.3**	**177.8**	**181.9**	**185.9**	**190.2**	**193.3**	**195.8**	**199.1**	**202.2**	**209.0**	**214.1**	**223.3**	**239.5**	**256.0**
	"L" (in)	(6.78)	(6.90)	(7.00)	(7.16)	(7.32)	(7.49)	(7.61)	(7.71)	(7.84)	(7.96)	(8.23)	(8.43)	(8.79)	(9.43)	(10.08)

Code: VB

SAE A 4-Bolt, 7/8-14 SAE Rear Port

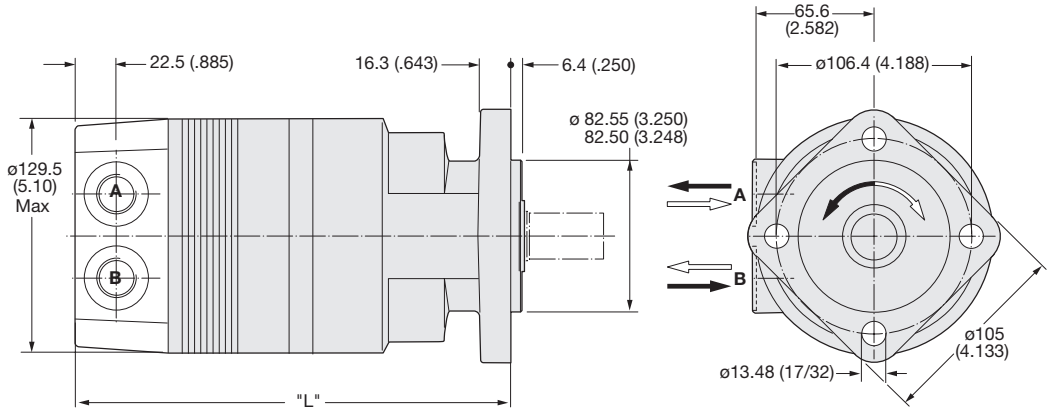

Code VB disp		0110	0140	0170	0195	0240	0280	0310	0335	0360	0405	0475	0530	0625	0785	0960
Weight/Gewicht	**kg**	**15.5**	**15.9**	**16.1**	**16.4**	**16.7**	**17.1**	**17.2**	**17.4**	**17.8**	**18.1**	**18.5**	**19.2**	**19.4**	**21.1**	**22.6**
Poids/Peso	(lb)	(34.2)	(35.1)	(35.4)	(36.1)	(36.8)	(37.7)	(38.0)	(38.3)	(39.2)	(40.0)	(40.7)	(42.3)	(43.7)	(46.6)	(49.8)
Length	**"L" mm**	**211.3**	**214.4**	**213.9**	**219.7**	**223.8**	**227.8**	**230.9**	**233.4**	**236.7**	**239.8**	**246.9**	**252.0**	**261.1**	**277.4**	**293.9**
	"L" (in)	(8.32)	(8.44)	(8.42)	(8.65)	(8.81)	(8.97)	(9.09)	(9.19)	(9.32)	(9.44)	(9.72)	(9.92)	(10.28)	(10.92)	(11.57)

English equivalents for metric specifications are shown in ( ).

WARNING
This product can expose you to chemicals including lead and DEHP, which are known to the State of California to cause cancer, and birth defects or other reproductive harm. For more information go to www.p65warnings.ca.gov

Tel: +45 63 12 83 00 | Email: ps@hymatik.com | www.hymatik.com | Hvidkaervej 27a, DK-5250 Odense SV, Denmark

Code: DB

Large Wheel Mount, 7/8-14 SAE Rear Port

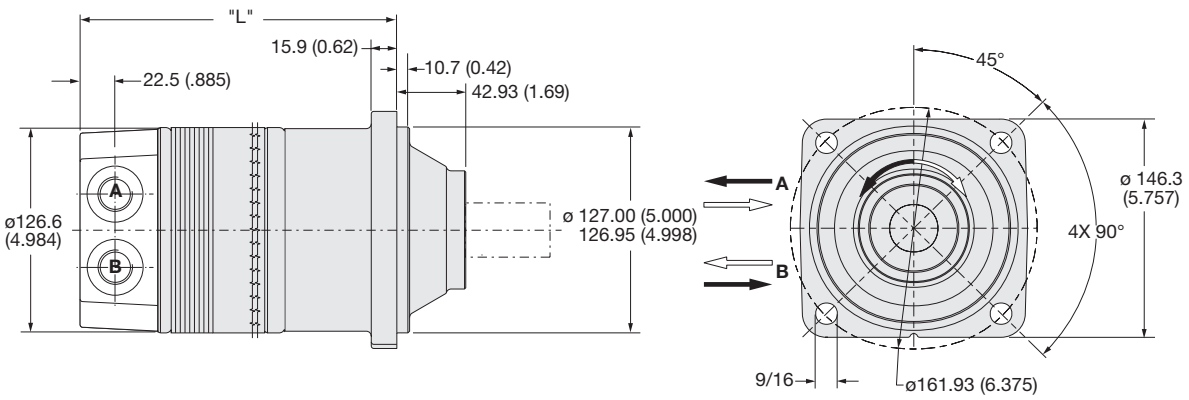

Code DB disp		0110	0140	0170	0195	0240	0280	0310	0335	0360	0405	0475	0530	0625	0785	0960
Weight/Gewicht kg		**17.0**	**17.4**	**17.6**	**17.8**	**18.1**	**18.5**	**18.7**	**18.8**	**19.1**	**19.4**	**19.6**	**20.6**	**21.3**	**22.6**	**24.1**
Poids/Peso	(lb)	(37.4)	(38.3)	(38.8)	(39.3)	(40.0)	(40.8)	(41.2)	(41.5)	(42.1)	(42.7)	(44.0)	(45.4)	(46.9)	(49.9)	(53.2)
Length "L" mm		**172.2**	**175.3**	**177.8**	**181.9**	**185.9**	**190.2**	**193.3**	**195.8**	**199.1**	**202.2**	**209.0**	**214.1**	**223.3**	**239.5**	**256.0**
"L"	(in)	(6.78)	(6.90)	(7.00)	(7.16)	(7.32)	(7.49)	(7.61)	(7.71)	(7.84)	(7.96)	(8.23)	(8.43)	(8.79)	(9.43)	(10.08)

Code: EW

Modified SAE A 6-Bolt, G1/2 BSPP

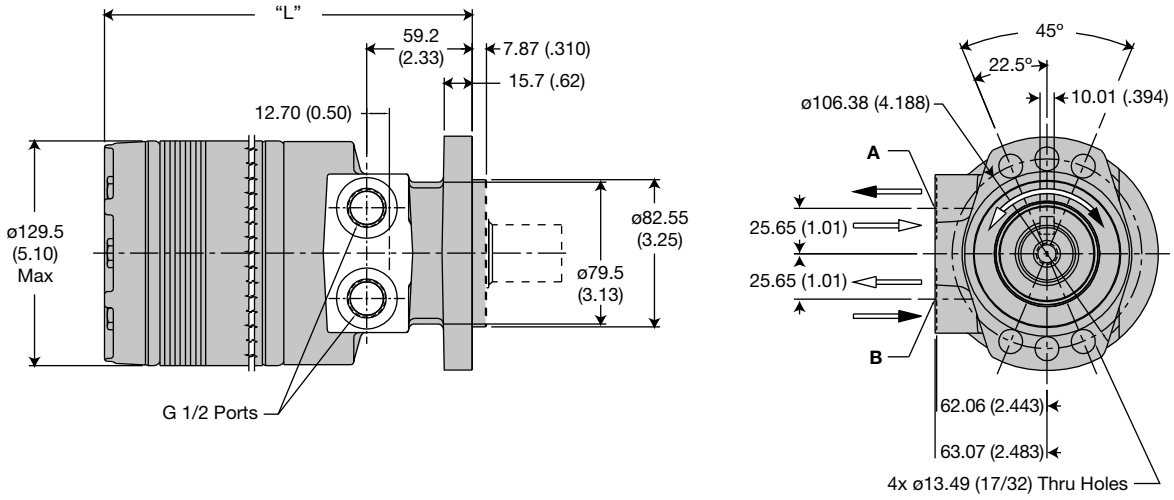

Code EW disp		0110	0140	0170	0195	0240	0280	0310	0335	0360	0405	0475	0530	0625	0785	0960
Weight/Gewicht kg		**13.7**	**14.1**	**14.3**	**14.5**	**14.8**	**15.2**	**15.4**	**15.5**	**15.8**	**16.1**	**16.6**	**17.3**	**18.0**	**19.8**	**20.8**
Poids/Peso	(lb)	(30.1)	(31.0)	(31.5)	(32.0)	(32.7)	(33.5)	(33.9)	(34.2)	(34.8)	(35.4)	(36.7)	(38.1)	(39.6)	(43.6)	(45.9)
Length "L" mm		**190.2**	**193.3**	**196.1**	**198.6**	**202.4**	**206.8**	**209.8**	**212.3**	**215.6**	**218.7**	**225.8**	**230.9**	**239.8**	**256.0**	**272.5**
"L"	(in)	(7.49)	(7.61)	(7.72)	(7.82)	(7.97)	(8.14)	(8.26)	(8.36)	(8.49)	(8.61)	(8.89)	(9.09)	(9.44)	(10.08)	(10.73)

English equivalents for metric specifications are shown in ( ).

WARNING
This product can expose you to chemicals including lead and DEHP, which are known to the State of California to cause cancer, and birth defects or other reproductive harm. For more information go to www.p65warnings.ca.gov

Tel: +45 63 12 83 00 | Email: ps@hymatik.com | www.hymatik.com | Hvidkaervej 27a, DK-5250 Odense SV, Denmark

Code: TS

Wheel, Front Brake, No Tapped Holes in Nose, 7/8-14 SAE

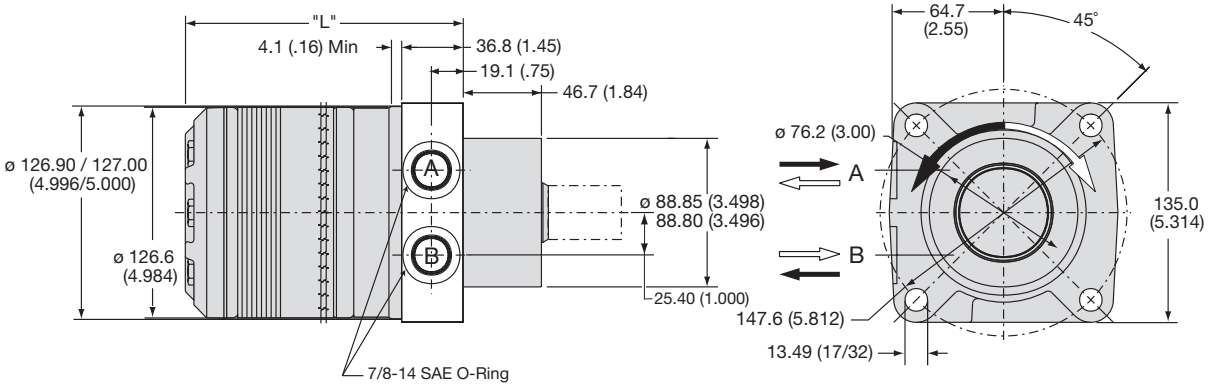

Code TS disp	0110	0140	0170	0195	0240	0280	0310	0335	0360	0405	0475	0530	0625	0785	0960
Weight/Gewicht kg	**14.0**	**14.4**	**14.6**	**14.9**	**15.2**	**15.6**	**15.7**	**15.8**	**16.1**	**16.4**	**16.5**	**17.6**	**18.3**	**19.7**	**21.1**
Poids/Peso (lb)	(30.9)	(31.8)	(32.2)	(32.8)	(33.5)	(34.3)	(34.7)	(34.9)	(35.4)	(36.2)	(36.4)	(38.9)	(40.3)	(43.4)	(46.6)
Length "L" mm	**145.0**	**148.1**	**150.6**	**153.4**	**157.2**	**161.5**	**164.6**	**167.1**	**170.4**	**173.5**	**180.6**	**185.7**	**194.6**	**210.8**	**227.3**
"L" (in)	(5.71)	(5.83)	(5.93)	(6.04)	(6.19)	(6.36)	(6.48)	(6.58)	(6.71)	(6.83)	(7.11)	(7.31)	(7.66)	(8.30)	(8.95)

English equivalents for metric specifications are shown in ( ).

WARNING
This product can expose you to chemicals including lead and DEHP, which are known to the State of California to cause cancer, and birth defects or other reproductive harm. For more information go to www.p65warnings.ca.gov

Tel: +45 63 12 83 00 | Email: ps@hymatik.com | www.hymatik.com | Hvidkaervej 27a, DK-5250 Odense SV, Denmark

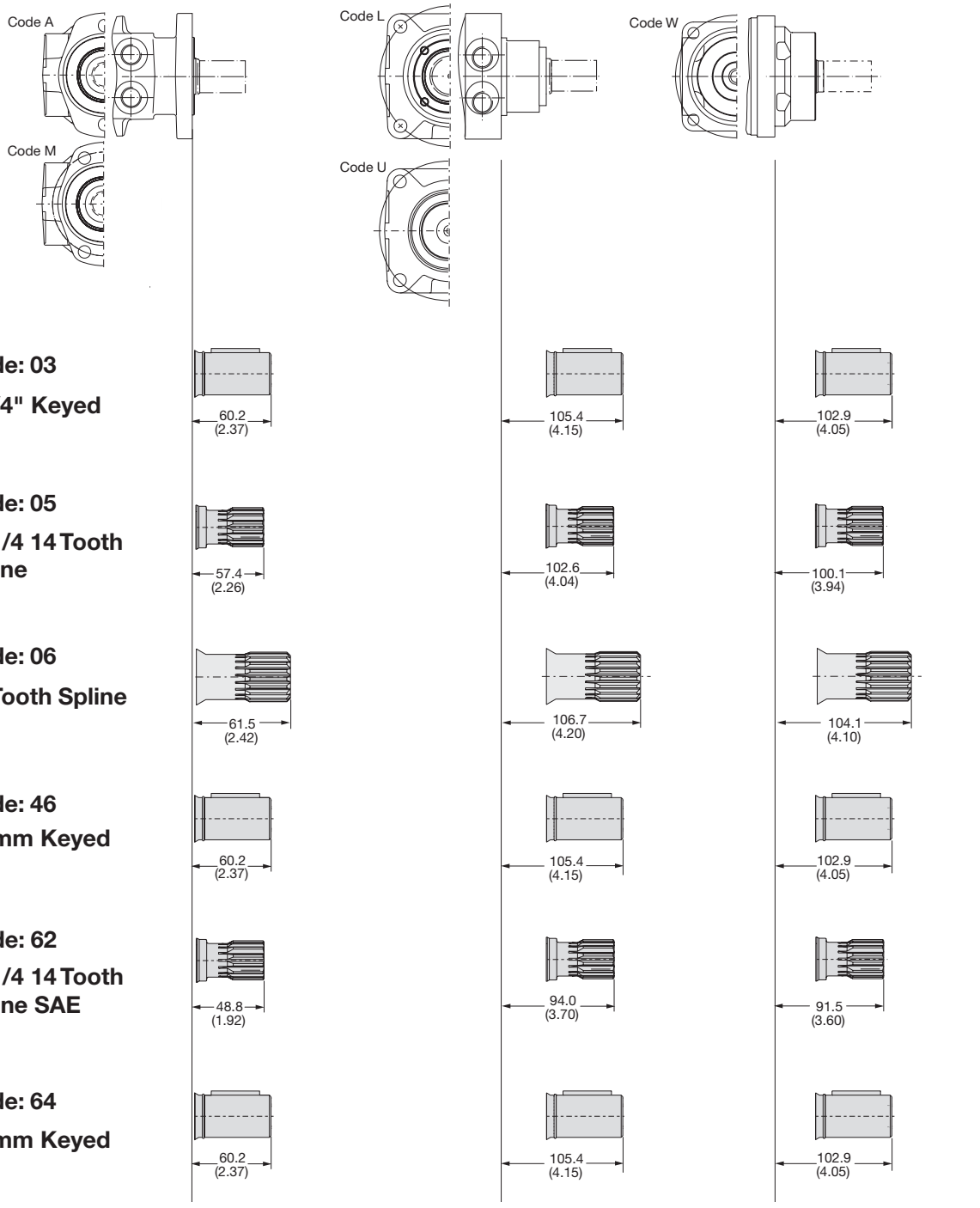

English equivalents for metric specifications are shown in ( ).

WARNING
This product can expose you to chemicals including lead and DEHP, which are known to the State of California to cause cancer, and birth defects or other reproductive harm. For more information go to www.p65warnings.ca.gov

Code: 03

1 1/4" Keyed

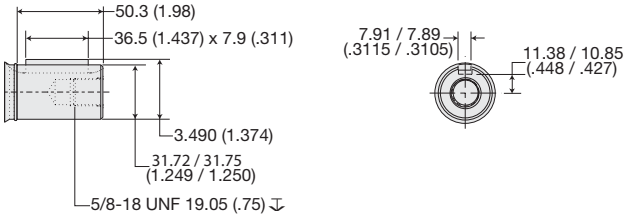

Code: 05

1" 1/4 14 Tooth Spline

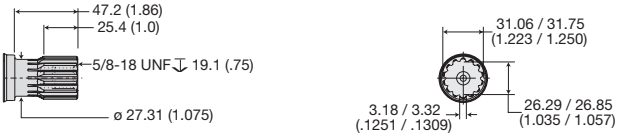

Code: 06

19 Tooth Spline

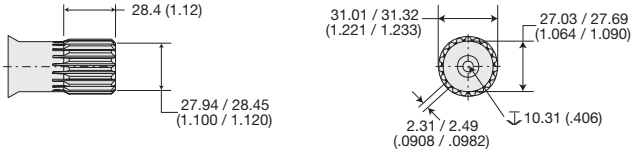

Code: 46

32 mm Keyed

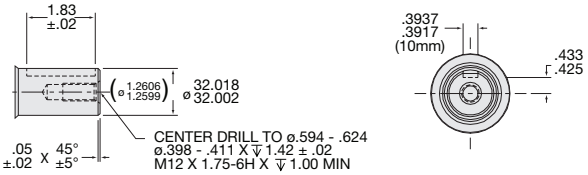

Code: 62

1" 1/4 14 Tooth Spline SAE



Code: 64

40 mm Keyed

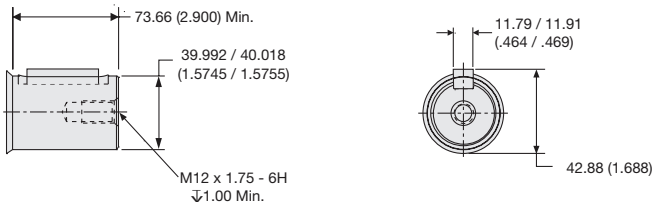

English equivalents for metric specifications are shown in ( ).

WARNING
This product can expose you to chemicals including lead and DEHP, which are known to the State of California to cause cancer, and birth defects or other reproductive harm. For more information go to www.p65warnings.ca.gov

Tel: +45 63 12 83 00 | Email: ps@hymatik.com | www.hymatik.com | Hvidkaervej 27a, DK-5250 Odense SV, Denmark

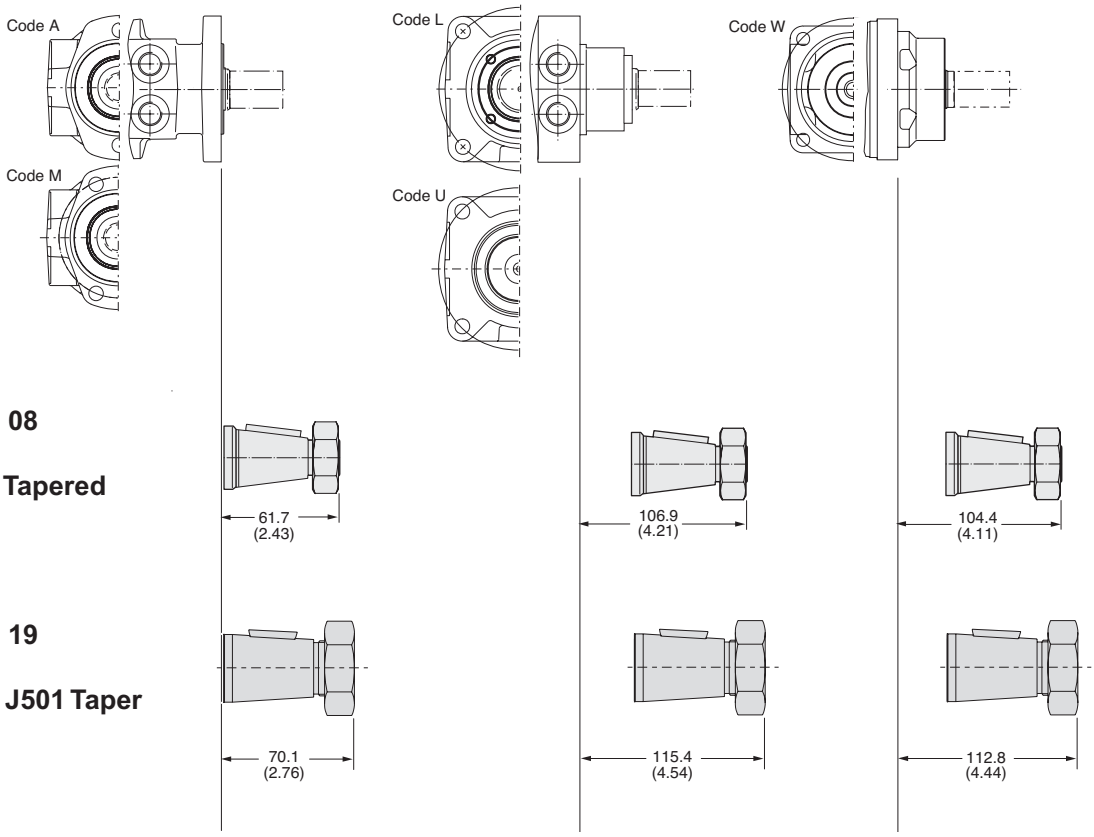

Code: 08

1 1/4" Tapered

Code: 19

1 3/8" J501 Taper

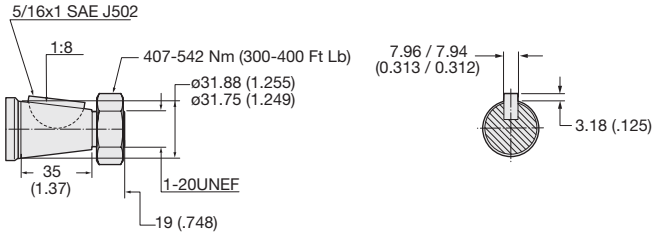

Code: 08

1 1/4" Tapered

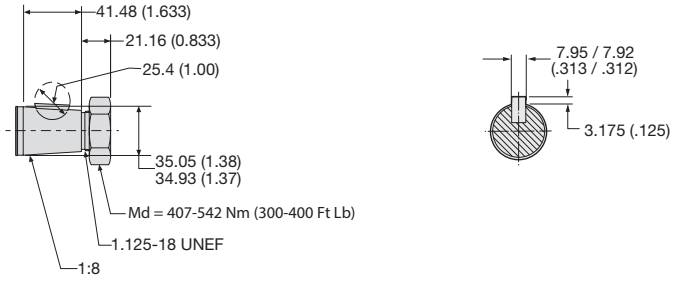

Code: 19

1 3/8" J501 Taper

English equivalents for metric specifications are shown in ( ).

WARNING
This product can expose you to chemicals including lead and DEHP, which are known to the State of California to cause cancer, and birth defects or other reproductive harm. For more information go to www.p65warnings.ca.gov

Tel: +45 63 12 83 00 | Email: ps@hymatik.com | www.hymatik.com | Hvidkaervej 27a, DK-5250 Odense SV, Denmark

13 Displacements **13 Schluckvolumen** **13 Cylindrée** **13 Despazamientos**		(8.6 to 58.5 in³/rev) **141 . . . 959 cm³/rev**
	Cont.	**Int.**
Maximum Pressure **Eingangsdruck** **Pression entrée** **Presion Maxima**	(3000 psid) **. . . 207 bar**	(4000 psid) **. . . 276 bar**
Maximum Oil Flow **Schluckstrom** **Débit d'huile** **Caudal Maximo de Aceite**		(30 gpm) **. . . 114 lpm**
Maximum Speed **Drehzahl** **Vitesse de rotation** **Velocidad Maxima**		(660 rpm) **660 rpm**
	Cont.	**Int.**
Maximum Torque **MaxDrehmoment** **Couple** **Torque Maximo**	(8,772 lb in) **991 Nm**	(11,876 lb in) **1342 Nm**
Maximum Side Load at Key **Seitenlast** **Charges latèrales** **Carga Maxima Lateral**		(4800 lb) **. . . 21360 N**

A Rugged Motor for Heavy Duty, High Side Load Applications

This motor was designed for tough applications. A stout drive link with unique 60:40 spline geometry will transmit over 13,000 lb-in of torque. The 1-1/2" output shaft can support 7000 pounds of radial load. Efficiency is assured by the use of roller vanes and sealed commutator. Durability is maintained by continually washing the powertrain splines and shaft seal in cooling fluid.

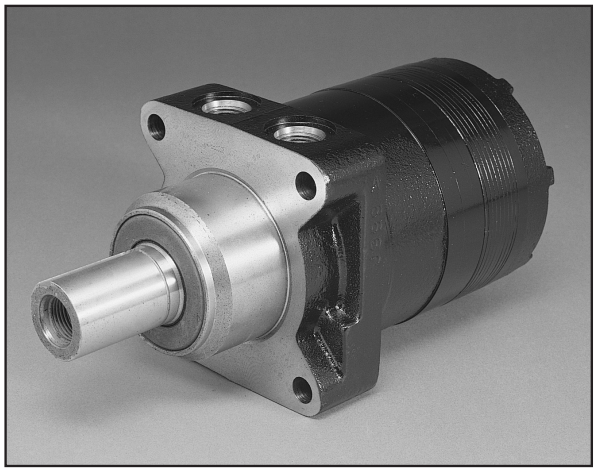

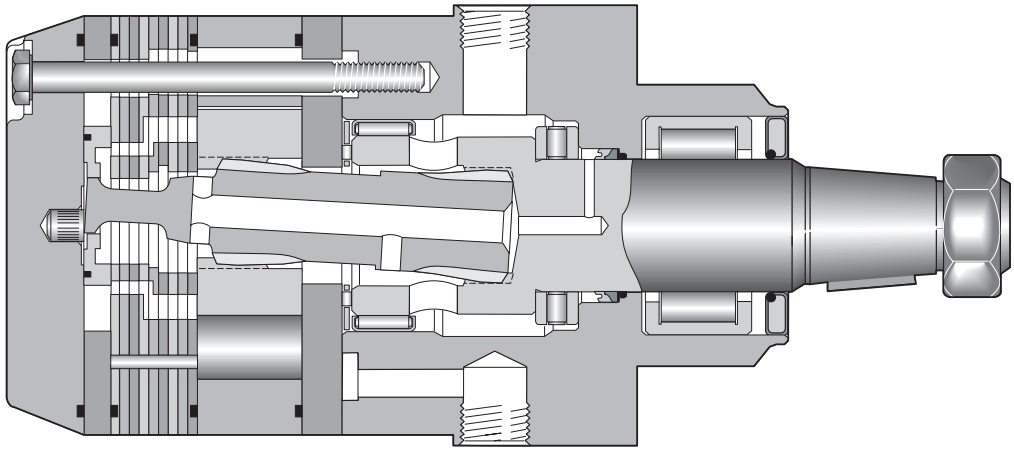

⚠ **WARNING**
This product can expose you to chemicals including lead and DEHP, which are known to the State of California to cause cancer, and birth defects or other reproductive harm. For more information go to www.p65warnings.ca.gov

Tel: +45 63 12 83 00 | Email: ps@hymatik.com | www.hymatik.com | Hvidkaervej 27a, DK-5250 Odense SV, Denmark

Ordering Information / Bestellschlüssel
System de Commande / Imformacion para pedidos

LSHT Torqmotors™ and Nichols™ Motors
THK Series / Serie / Série HY13-1590-011/US,EU

THK — Series

XXXX — Displacement / Schluckvolumen / Cylindrée / Desplazamiento

Code	cm³/tr cm³/giro cm³/U	in³/rev
0140	141	8.6
0170	169	10.3
0195	195	11.9
0240	238	14.5
0280	280	17.1
0310	310	18.9
0335	337	20.6
0360	360	22.2
0405	405	24.7
0475	477	29.1
0530	528	32.3
0625	623	38.0
0785	786	48.0
0960	959	58.5

XX — Mounting/Ports / Gehäuse/Anschluß / Carter/Plan de raccordement / Montaje/Lumbreras

Code	Mounting/Ports
US	Wheel, Standard, 7/8-14 SAE 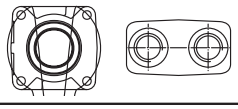
Custom Order MS	Magneto, 7/8-14 SAE 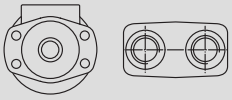

XX — Shaft / Welle / Arbre / Eje

Code	Shaft
31	1 1/2" J501 Taper 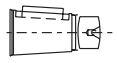
36	1 1/2" 17 Tooth 12/24 Spline 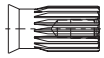
Custom Order 32	1 1/2" Keyed 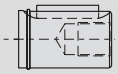
Custom Order 73	17 Tooth Spline (12/24 P.) (full length spline) M12 Tap 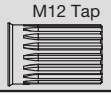

Shaded areas indicate custom order components. Standard pricing and delivery terms may not apply to these components. Please refer to the price list for details, or consult your Parker Pump Motor division Sales Resource.

WARNING
This product can expose you to chemicals including lead and DEHP, which are known to the State of California to cause cancer, and birth defects or other reproductive harm. For more information go to www.p65warnings.ca.gov

Parker Hannifin Corporation
Pump & Motor Division
Greeneville, Tennessee, USA

Tel: +45 63 12 83 00 | Email: ps@hymatik.com | www.hymatik.com | Hvidkaervej 27a, DK-5250 Odense SV, Denmark

0

Rotation
Drehrichtung
Direction de rotation
Rotacion

Code	Front Port Rotation
0	Standard 
1	Reverse Timed Manifold 

Code	Rear Rotation
0	Standard 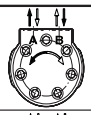
1	Reverse Timed Manifold 

Rotation viewed from shaft end.

XXXX

Options
Opciones

Code	Options
AAAA	"Standard", Black Paint (045134), Paint area all over except front and rear pilot and mounting flanges and shaft
AAAB	"Standard", No Paint
AAAC	"Standard", Double Paint (045247), Paint area all over except front and rear pilot and mounting flanges and shaft
AABJ	Free Running Rotor Set, Black paint (045134), Paint area all over except front and rear pilot and mounting flanges and shaft
AABT	Black paint (045134), Paint area all over except front and rear pilot and mounting flanges and shaft, No shaft hardware
AAFA	Fluorocarbon (Viton) Seals, High Temp Commutator Seal, No paint
AAFW	Fluorocarbon (Viton) Seals, High Temp Commutator Seal, Black paint (045134), Paint area all over except front and rear pilot and mounting flanges and shaft
AAJH	Fluorocarbon (Viton) Seals, High Temp Commutator Seal, Black paint (045134), Paint area all over except front and rear pilot and mounting flanges and shaft, No shaft hardware
AAJL	No paint, No shaft hardware
AAUP	Fluorocarbon (Viton) Seals, High Temp Commutator Seal, No Paint, No shaft Hardware
AAVE	Free Running Rotor Set, Fluorocarbon (Viton) Seals, High Temp Commutator Seal, Black Paint (045134), Paint area all over except front and rear pilot and mounting flanges and shaft
ABCW	Fluorocarbon (Viton) Seals, High Temperature Commutator Seal, Bidirectional shuttle (.062 Orifice) (11:00*), Black Paint (045134), Paint area all over except front and rear pilot and mounting flanges and shaft, No Shaft Hardware
ABCZ	Fluorocarbon (Viton) Seals, Double paint (045247), Paint area all over except front and rear pilot and mounting flanges and shaft
BBGV	Fluorocarbon (Viton) Seals, High Temperature Commutator Seal, 1015 PSI Int Bidirectional Relief, Black Paint (045134), Paint area all over except front and rear pilot and mounting flanges and shaft, No Shaft Hardware
BBGW	Fluorocarbon (Viton) Seals, High Temperature Commutator Seal, 1450 PSI Int Bidirectional Relief, Black Paint (045134), Paint area all over except front and rear pilot and mounting flanges and shaft, No Shaft Hardware
BBGX	No Shaft Hardware, Fluorocarbon (Viton) Seals, High Temperature Commutator Seal, 2031 PSI Int Bidirectional Relief, Black Paint (045134), Paint area all over except front and rear pilot and mounting flanges and shaft, No Shaft Hardware
BBGY	Fluorocarbon (Viton) Seals, High Temperature Commutator Seal, 3046 PSI Int Bidirectional Relief, Black Paint (045134), Paint area all over except front and rear pilot and mounting flanges and shaft, No Shaft Hardware
BBGZ	Fluorocarbon (Viton) Seals, High Temperature Commutator Seal, 4061 PSI Int Bidirectional Relief, Black Paint (045134), Paint area all over except front and rear pilot and mounting flanges and shaft, No Shaft Hardware
BBHC	Fluorocarbon (Viton) Seals, High Temperature Commutator Seal, 725 PSI Int Bidirectional Relief, Black Paint (045134), Paint area all over except front and rear pilot and mounting flanges and shaft, No Shaft Hardware
BBHD	Fluorocarbon (Viton) Seals, High Temperature Commutator Seal, 2538 PSI Int Bidirectional Relief, Black Paint (045134), Paint area all over except front and rear pilot and mounting flanges and shaft, No Shaft Hardware
FSEK	Fluorocarbon (Viton) Seals, High Temperature Commutator Seal, Parker ECD Speed Sensor (455073), Black Paint (045134), Paint area all over except front and rear pilot and mounting flanges and shaft, No Shaft Hard-ware
FSEN	Fluorocarbon (Viton) Seals, High Temperature Commutator Seal, Parker ECD Speed Sensor (455073), No Paint, No Shaft Hardware

Shaded areas indicate custom order components. Standard pricing and delivery terms may not apply to these components. Please refer to the price list for details, or consult your Parker Pump Motor division Sales Resource.

WARNING
This product can expose you to chemicals including lead and DEHP, which are known to the State of California to cause cancer, and birth defects or other reproductive harm. For more information go to www.p65warnings.ca.gov

Tel: +45 63 12 83 00 | Email: ps@hymatik.com | www.hymatik.com | Hvidkaervej 27a, DK-5250 Odense SV, Denmark

Performance Data / Leistungsdaten
Puissance / Datos Tecnicos

LSHT Torqmotors™ and Nichols™ Motors
THK Series / Serie / Série HY13-1590-011/US,EU

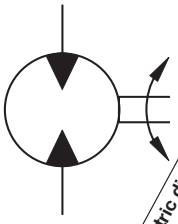

Motor Series THK	Geometric displacement cm³/rev in³/rev	Max. speed @ Max. intermittent flow Max. Drehzahl Intermittierender Betrieb: Vitesse de rotation maxi Velocidad maxima a caudal intermitente maximo rev/min	Max. oil flow Max. Schluckstrom Débit d'huile maxi Portata max *cont / int** l/min g/min		Max. differential pressure Max. Druckgefälle Chute de pression maxi Presion diferencial maxima *cont / int** bar psid		Max. supply pressure Max. Eingangsdruck Pression maxi entrée Presion maxima de alimentacion *max* bar psig	Max. torque Max. Drehmoment Couple maxi Torque Maximo *cont / int** Nm lb-in		Max. performance Max. Leistungsabgabe Puissance de sortie maxi Potenza meccanica max *max* KW HP	Min. starting torque Min. Anlaufmoment Couple min. fourni au dé manrage Torque minimo de arranque *cont / int** Nm lb-in	
THK 0140	**141** 8.6	660	**76** 20	**95** 25	**207** 3000	**276** 4000	**300** 4350	**390** 3455	**530** 4692	**33** 45	**315** 2791	**418** 3706
THK 0170	**169** 10.3	554	**76** 20	**95** 25	**207** 3000	**276** 4000	**300** 4350	**476** 4216	**646** 5714	**33** 45	**376** 3331	**505** 4469
THK 0195	**195** 11.9	477	**76** 20	**95** 25	**207** 3000	**276** 4000	**300** 4350	**556** 4919	**753** 6663	**33** 45	**451** 3989	**611** 5408
THK 0240	**238** 14.5	393	**76** 20	**95** 25	**207** 3000	**276** 4000	**300** 4350	**677** 5991	**913** 8081	**32** 44	**582** 5152	**776** 6865
THK 0280	**280** 17.1	334	**76** 20	**95** 25	**207** 3000	**276** 4000	**300** 4350	**796** 7044	**1073** 9499	**31** 42	**675** 5972	**870** 7699
THK 0310	**310** 18.9	303	**76** 20	**95** 25	**207** 3000	**276** 4000	**300** 4350	**964** 8533	**1297** 11479	**30** 41	**843** 7458	**1117** 9889
THK 0335	**337** 20.6	277	**76** 20	**95** 25	**207** 3000	**276** 4000	**300** 4350	**924** 8184	**1229** 10817	**31** 41	**778** 6882	**1005** 8893
THK 0360	**360** 22.2	259	**76** 20	**95** 25	**172** **2500**	**241** 3500	**300** 4350	**894** 7913	**1253** 11093	**29** 39	**703** 6224	**1017** 9007
THK 0405	**405** 24.7	232	**76** 20	**95** 25	**172** 2500	**241** 3500	**300** 4350	**942** 8336	**1342** 11877	**27** 37	**791** 7002	**1145** 10133
THK 0475	**477** 29.1	237	**76** 20	**114** 30	**138** 2000	**207** 3000	**300** 4350	**887** 7853	**1372** 12145	**28** 38	**740** 6549	**1120** 9909
THK 0530	**528** 32.3	213	**76** 20	**114** 30	**138** 2000	**172** 2500	**300** 4350	**983** 8701	**1253** 11086	**23** 31	**874** 7737	**1091** 9657
THK 0625	**623** 38.0	182	**76** 20	**114** 30	**121** 1750	**155** 2250	**300** 4350	**986** 8727	**1291** 11424	**20** 27	**895** 7924	**1165** 10312
THK 0785	**786** 48.0	143	**76** 20	**114** 30	**103** 1500	**138** 2000	**300** 4350	**1044** 9239	**1428** 12636	**17** 23	**991** 8772	**1341** 11876
THK 0960	**959** 58.5	118	**76** 20	**114** 30	**69** 1000	**103** 1500	**300** 4350	**773** 6843	**1268** 11227	**12** 16	**763** 6752	**1177** 10419

Performance data based on testing using 10W40 oil with a viscosity of 200 SUS at 54° C (130° F.). Performance data is typical. Actual data may vary slightly from one production motor to another.

Les donnees sur les performances sont basees sur des tests utilisant de l'huile 10W40 d'une viscosite de 200 SUS a 54°C (130°F). Ces donnees correspondent a des situations typiques. Les donnees reelles peuvent varier legerement d'un moteur de production a l'autre.

Leistungsdaten sind gemessen mit SAE 10W40 bei einer Viskositaet von 43,1 Cst bei 54°C. Geringfuegige Abweichungen von den Katalogdaten sind moeglich.

Datos tecnicos obtenidos con aceite 10W40 de 200 SUS de viscosidad a 54°C (130°F). Los datos proporcionados son valores tipcos. Los valores exactos reales podrian tener una pequena variacion entre distintos motores.

* Intermittent operation rating applies to 10% of every minute.
Intermittierende Werte maximal 10% von jeder Betriebsminute.
Fonctionnement interm. 10% max. de chaque minute d`utilisation.
Capacidad de funcionamiento intermitente valida para 10% por cada minuto.

WARNING
This product can expose you to chemicals including lead and DEHP, which are known to the State of California to cause cancer, and birth defects or other reproductive harm. For more information go to www.p65warnings.ca.gov

Tel: +45 63 12 83 00 | Email: ps@hymatik.com | www.hymatik.com | Hvidkaervej 27a, DK-5250 Odense SV, Denmark

THK 0140

8.6 cu in / rev

PRESSURE (PSID)

Flow (GPM)	500	1000	1500	2000	2500	3000	3500	4000
.5	519 **9**	1060 **4**						
1	540 **22**	1090 **17**	1635 **11**	2180 **6**				
2	569 **49**	1156 **43**	1730 **36**	2286 **30**	2827 **23**	3368 **19**	3899 **12**	4447 **12**
3	565 **75**	1159 **69**	1744 **62**	2321 **55**	2899 **47**	3477 **40**	4048 **33**	4608 **29**
4	564 **102**	1170 **94**	1768 **87**	2358 **80**	2943 **72**	3517 **64**	4082 **57**	4644 **52**
5	556 **128**	1170 **120**	1776 **112**	2375 **105**	2968 **97**	3556 **89**	4135 **81**	4701 **76**
7	540 **182**	1160 **172**	1779 **164**	2390 **155**	2994 **146**	3592 **138**	4181 **130**	4763 **123**
9	515 **235**	1143 **225**	1768 **215**	2385 **206**	2996 **196**	3601 **187**	4199 **179**	4794 **171**
12	471 **315**	1096 **303**	1729 **292**	2356 **281**	2974 **271**	3587 **261**	4193 **252**	4794 **243**
15	418 **395**	1042 **381**	1673 **368**	2307 **357**	2933 **346**	3549 **336**	4163 **325**	4771 **314**
20	299 **528**	931 **512**	1565 **497**	2198 **484**	2825 **472**	3455 **459**	4078 **447**	4692 **435**
25	173 **660**	794 **643**	1426 **626**	2059 **612**	2695 **598**	3332 **583**	3961 **569**	4579 **555**

TORQUE (LB IN) 3332
SPEED (RPM) 583

■ Cont. □ Int.

Intermittent operation rating applies to 10% of every minute.

Fonctionnement interm. 10% max. de chaque minute d`utilisation.

Performance data based on testing using 10W40 oil with a viscosity of 200 SUS at 54° C (130° F.). Performance data is typical. Actual data may vary slightly from one production motor to another.

Les donnees sur les performances sont basees sur des tests utilisant de l'huile 10W40 d'une viscosite de 200 SUS a 54°C (130°F). Ces donnees correspondent a des situations typiques. Les donnees reelles peuvent varier legerement d'un moteur de production a l'autre.

Intermittierende Werte maximal 10% von jeder Betriebsminute.

Capacidad de funcionamiento intermitente valida para 10% por cada minuto.

Leistungsdaten sind gemessen mit SAE 10W40 bei einer Viskositaet von 43,1 Cst bei 54°C. Geringfuegige Abweichungen von den Katalogdaten sind moeglich.

Datos tecnicos obtenidos con aceite 10W40 de 200 SUS de viscosidad a 54°C (130°F). Los datos proporcionados son valores tipcos. Los valores exactos reales podrian tener una pequena variacion entre distintos motores.

⚠ WARNING
This product can expose you to chemicals including lead and DEHP, which are known to the State of California to cause cancer, and birth defects or other reproductive harm. For more information go to www.p65warnings.ca.gov

Parker Hannifin Corporation
Pump & Motor Division
Greeneville, Tennessee, USA

Tel: +45 63 12 83 00 | Email: ps@hymatik.com | www.hymatik.com | Hvidkaervej 27a, DK-5250 Odense SV, Denmark

THK 0170

10.3 cu in / rev

PRESSURE (PSID)

Flow (GPM)	500	1000	1500	2000	2500	3000	3500	4000
.5	620 **9**	1284 **7**	1945 **5**	2613 **4**	3293 **3**	3983 **2**		
1	652 **20**	1337 **18**	2006 **16**	2683 **14**	3375 **12**	4063 **11**	4744 **8**	5402 **8**
2	678 **42**	1390 **40**	2105 **37**	2822 **35**	3535 **32**	4226 **30**	4909 **27**	5587 **25**
3	678 **64**	1397 **61**	2117 **58**	2836 **56**	3554 **53**	4263 **50**	4963 **46**	5652 **44**
4	679 **86**	1409 **83**	2142 **80**	2872 **77**	3596 **74**	4310 **71**	5021 **67**	5716 **64**
5	675 **108**	1413 **104**	2150 **101**	2885 **98**	3616 **94**	4339 **91**	5057 **87**	5761 **83**
7	661 **153**	1405 **148**	2152 **143**	2900 **140**	3642 **136**	4374 **132**	5101 **127**	5818 **123**
9	632 **197**	1385 **191**	2140 **186**	2891 **181**	3638 **177**	4380 **173**	5114 **168**	5838 **163**
12	583 **263**	1334 **256**	2096 **250**	2860 **244**	3617 **239**	4362 **234**	5101 **228**	5823 **223**
15	524 **330**	1275 **322**	2035 **314**	2804 **308**	3572 **302**	4327 **296**	5070 **289**	5801 **283**
20	382 **442**	1143 **432**	1908 **422**	2683 **413**	3455 **406**	4216 **399**	4972 **391**	5714 **383**
25	239 **554**	983 **543**	1747 **531**	2523 **520**	3299 **511**	4071 **501**	4839 **492**	5591 **483**

TORQUE (LB IN) 4839
SPEED (RPM) 492

■ Cont. □ Int.

Intermittent operation rating applies to 10% of every minute.

Fonctionnement interm. 10% max. de chaque minute d`utilisation.

Performance data based on testing using 10W40 oil with a viscosity of 200 SUS at 54° C (130° F.). Performance data is typical. Actual data may vary slightly from one production motor to another.

Les donnees sur les performances sont basees sur des tests utilisant de l'huile 10W40 d'une viscosite de 200 SUS a 54°C (130°F). Ces donnees correspondent a des situations typiques. Les donnees reelles peuvent varier legerement d'un moteur de production a l'autre.

Intermittierende Werte maximal 10% von jeder Betriebsminute.

Capacidad de funcionamiento intermitente valida para 10% por cada minuto.

Leistungsdaten sind gemessen mit SAE 10W40 bei einer Viskositaet von 43,1 Cst bei 54°C. Geringfuegige Abweichungen von den Katalogdaten sind moeglich.

Datos tecnicos obtenidos con aceite 10W40 de 200 SUS de viscosidad a 54°C (130°F). Los datos proporcionados son valores tipcos. Los valores exactos reales podrian tener una pequena variacion entre distintos motores.

WARNING
This product can expose you to chemicals including lead and DEHP, which are known to the State of California to cause cancer, and birth defects or other reproductive harm. For more information go to www.p65warnings.ca.gov

Tel: +45 63 12 83 00 | Email: ps@hymatik.com | www.hymatik.com | Hvidkaervej 27a, DK-5250 Odense SV, Denmark

THK 0195

11.9 cu in / rev

PRESSURE (PSID)

Flow (GPM)	500	1000	1500	2000	2500	3000	3500	4000
.5	733 **7**	1503 **3**						
1	761 **16**	1546 **13**	2326 **8**	3104 **3**				
2	799 **35**	1638 **32**	2465 **27**	3270 **21**	4046 **16**	4813 **11**	5589 **7**	6375 **6**
3	794 **55**	1639 **50**	2476 **45**	3303 **39**	4132 **34**	4970 **28**	5792 **23**	6595 **19**
4	794 **74**	1654 **69**	2509 **64**	3356 **58**	4196 **52**	5023 **46**	5830 **40**	6635 **35**
5	783 **93**	1653 **88**	2517 **83**	3375 **76**	4224 **70**	5065 **64**	5895 **58**	6710 **52**
7	762 **131**	1637 **126**	2514 **120**	3384 **113**	4245 **106**	5098 **99**	5940 **92**	6772 **86**
9	731 **170**	1616 **164**	2499 **157**	3373 **150**	4239 **142**	5093 **135**	5936 **127**	6774 **120**
12	677 **228**	1562 **221**	2455 **213**	3343 **205**	4217 **196**	5081 **188**	5934 **179**	6776 **172**
15	613 **285**	1498 **278**	2389 **269**	3283 **260**	4169 **251**	5040 **242**	5907 **232**	6765 **233**
20	448 **381**	1350 **373**	2245 **363**	3141 **353**	4031 **342**	4919 **331**	5798 **321**	6663 **310**
25	334 **477**	1158 **468**	2044 **457**	2941 **445**	3837 **433**	4729 **421**	5612 **409**	6500 **397**

TORQUE (LB IN) 5612
SPEED (RPM) 409

■ Cont. □ Int.

Intermittent operation rating applies to 10% of every minute.

Fonctionnement interm. 10% max. de chaque minute d`utilisation.

Performance data based on testing using 10W40 oil with a viscosity of 200 SUS at 54° C (130° F.). Performance data is typical. Actual data may vary slightly from one production motor to another.

Les donnees sur les performances sont basees sur des tests utilisant de l'huile 10W40 d'une viscosite de 200 SUS a 54°C (130°F). Ces donnees correspondent a des situations typiques. Les donnees reelles peuvent varier legerement d'un moteur de production a l'autre.

Intermittierende Werte maximal 10% von jeder Betriebsminute.

Capacidad de funcionamiento intermitente valida para 10% por cada minuto.

Leistungsdaten sind gemessen mit SAE 10W40 bei einer Viskositaet von 43,1 Cst bei 54°C. Geringfuegige Abweichungen von den Katalogdaten sind moeglich.

Datos tecnicos obtenidos con aceite 10W40 de 200 SUS de viscosidad a 54°C (130°F). Los datos proporcionados son valores tipcos. Los valores exactos reales podrian tener una pequena variacion entre distintos motores.

WARNING
This product can expose you to chemicals including lead and DEHP, which are known to the State of California to cause cancer, and birth defects or other reproductive harm. For more information go to www.p65warnings.ca.gov

Tel: +45 63 12 83 00 | Email: ps@hymatik.com | www.hymatik.com | Hvidkaervej 27a, DK-5250 Odense SV, Denmark

THK 0240

14.5 cu in / rev

PRESSURE (PSID)

Flow (GPM)	500	1000	1500	2000	2500	3000	3500	4000
.5	932 **6**	1907 **4**	2894 **2**					
1	960 **14**	1954 **12**	2950 **9**	3943 **6**	4939 **3**	5930 **2**		
2	988 **30**	2031 **27**	3065 **24**	4090 **20**	5107 **17**	6100 **14**	7068 **11**	8037 **9**
3	983 **45**	2029 **42**	3071 **39**	4101 **35**	5128 **31**	6161 **27**	7182 **23**	8184 **20**
4	978 **61**	2037 **58**	3090 **54**	4136 **49**	5176 **45**	6207 **42**	7230 **37**	8234 **33**
5	962 **77**	2030 **73**	3092 **69**	4144 **64**	5190 **60**	6231 **56**	7259 **51**	8271 **47**
7	933 **108**	2005 **104**	3078 **99**	4141 **94**	5194 **89**	6239 **84**	7275 **78**	8298 **73**
9	890 **140**	1972 **135**	3048 **129**	4112 **123**	5169 **117**	6213 **112**	7245 **106**	8271 **100**
12	832 **187**	1912 **181**	2996 **175**	4071 **167**	5125 **161**	6163 **154**	7195 **147**	8224 **140**
15	753 **235**	1832 **228**	2921 **220**	4009 **212**	5081 **204**	6137 **196**	7182 **188**	8212 **180**
20	559 **314**	1654 **306**	2744 **297**	3834 **287**	4917 **278**	5991 **268**	7045 **258**	8081 **248**
25	524 **393**	1427 **384**	2507 **373**	3595 **363**	4690 **352**	5780 **340**	6853 **328**	7913 **317**

TORQUE (LB IN) 5780
SPEED (RPM) 340

■ Cont. □ Int.

Intermittent operation rating applies to 10% of every minute.

Fonctionnement interm. 10% max. de chaque minute d`utilisation.

Performance data based on testing using 10W40 oil with a viscosity of 200 SUS at 54° C (130° F.). Performance data is typical. Actual data may vary slightly from one production motor to another.

Les donnees sur les performances sont basees sur des tests utilisant de l'huile 10W40 d'une viscosite de 200 SUS a 54°C (130°F). Ces donnees correspondent a des situations typiques. Les donnees reelles peuvent varier legerement d'un moteur de production a l'autre.

Intermittierende Werte maximal 10% von jeder Betriebsminute.

Capacidad de funcionamiento intermitente valida para 10% por cada minuto.

Leistungsdaten sind gemessen mit SAE 10W40 bei einer Viskositaet von 43,1 Cst bei 54°C. Geringfuegige Abweichungen von den Katalogdaten sind moeglich.

Datos tecnicos obtenidos con aceite 10W40 de 200 SUS de viscosidad a 54°C (130°F). Los datos proporcionados son valores tipcos. Los valores exactos reales podrian tener una pequena variacion entre distintos motores.

WARNING
This product can expose you to chemicals including lead and DEHP, which are known to the State of California to cause cancer, and birth defects or other reproductive harm. For more information go to www.p65warnings.ca.gov

Tel: +45 63 12 83 00 | Email: ps@hymatik.com | www.hymatik.com | Hvidkaervej 27a, DK-5250 Odense SV, Denmark

THK 0280

17.1 cu in / rev

PRESSURE (PSID)

	500	1000	1500	2000	2500	3000	3500	4000
.5	1056 **5**	2177 **4**	3323 **2**	4512 **1**				
1	1087 **12**	2223 **10**	3378 **8**	4552 **6**	5734 **5**	6930 **3**	8135 **3**	9350 **2**
2	1124 **25**	2313 **23**	3513 **21**	4700 **18**	5880 **16**	7060 **14**	8239 **12**	9400 **11**
3	1124 **39**	2323 **36**	3532 **34**	4740 **31**	5940 **28**	7143 **25**	8346 **22**	9536 **19**
4	1126 **52**	2346 **49**	3568 **47**	4786 **43**	6004 **40**	7214 **37**	8415 **33**	9596 **30**
5	1115 **65**	2350 **62**	3582 **59**	4816 **56**	6044 **52**	7256 **49**	8457 **45**	9641 **41**
7	1091 **92**	2338 **88**	3586 **85**	4832 **80**	6072 **76**	7301 **72**	8515 **67**	9706 **63**
9	1046 **118**	2309 **114**	3564 **110**	4811 **105**	6051 **101**	7280 **96**	8499 **90**	9707 **85**
12	981 **159**	2242 **154**	3506 **148**	4757 **143**	5992 **137**	7221 **132**	8444 **125**	9652 **118**
15	898 **199**	2164 **193**	3437 **186**	4702 **180**	5951 **174**	7187 **168**	8416 **160**	9625 **152**
20	691 **266**	1976 **258**	3255 **250**	4529 **243**	5795 **235**	7044 **227**	8275 **218**	9499 **209**
25	703 **334**	1726 **324**	2987 **314**	4260 **305**	5540 **296**	6815 **286**	8071 **276**	9311 **267**

Flow (GPM)

TORQUE (LB IN) 8071
SPEED (RPM) 276

■ Cont. □ Int.

Intermittent operation rating applies to 10% of every minute.

Fonctionnement interm. 10% max. de chaque minute d`utilisation.

Performance data based on testing using 10W40 oil with a viscosity of 200 SUS at 54° C (130° F.). Performance data is typical. Actual data may vary slightly from one production motor to another.

Les donnees sur les performances sont basees sur des tests utilisant de l'huile 10W40 d'une viscosite de 200 SUS a 54°C (130°F). Ces donnees correspondent a des situations typiques. Les donnees reelles peuvent varier legerement d'un moteur de production a l'autre.

Intermittierende Werte maximal 10% von jeder Betriebsminute.

Capacidad de funcionamiento intermitente valida para 10% por cada minuto.

Leistungsdaten sind gemessen mit SAE 10W40 bei einer Viskositaet von 43,1 Cst bei 54°C. Geringfuegige Abweichungen von den Katalogdaten sind moeglich.

Datos tecnicos obtenidos con aceite 10W40 de 200 SUS de viscosidad a 54°C (130°F). Los datos proporcionados son valores tipcos. Los valores exactos reales podrian tener una pequena variacion entre distintos motores.

WARNING
This product can expose you to chemicals including lead and DEHP, which are known to the State of California to cause cancer, and birth defects or other reproductive harm. For more information go to www.p65warnings.ca.gov

Tel: +45 63 12 83 00 | Email: ps@hymatik.com | www.hymatik.com | Hvidkaervej 27a, DK-5250 Odense SV, Denmark

THK 0310

18.9 cu in / rev

PRESSURE (PSID)

Flow (GPM)	500	1000	1500	2000	2500	3000	3500	4000
.5	1188 **4**	2464 **3**	3766 **2**	5102 **1**				
1	1220 **11**	2508 **9**	3812 **7**	5145 **5**	6477 **4**	7822 **2**	9181 **2**	10530 **1**
2	1259 **23**	2598 **21**	3950 **19**	5298 **17**	6642 **14**	7972 **13**	9282 **10**	10574 **9**
3	1257 **35**	2606 **33**	3889 **30**	5332 **28**	6688 **25**	8044 **22**	9392 **19**	10693 **16**
4	1259 **47**	2628 **44**	4003 **42**	5377 **39**	6749 **36**	8114 **33**	9461 **29**	10780 **26**
5	1247 **59**	2629 **56**	4252 **52**	5401 **50**	6782 **47**	8149 **42**	9499 **39**	10823 **35**
7	1218 **84**	2614 **80**	4013 **76**	5413 **72**	6806 **68**	8184 **64**	9543 **60**	10874 **56**
9	1167 **107**	2574 **103**	3983 **99**	5386 **94**	6780 **90**	8162 **85**	9529 **80**	10877 **75**
12	1089 **143**	2493 **139**	3904 **133**	5308 **128**	6696 **122**	8075 **117**	9443 **110**	10793 **102**
15	995 **180**	2400 **173**	3817 **167**	5225 **160**	6621 **154**	8003 **148**	9371 **140**	10718 **131**
20	769 **241**	2194 **234**	3618 **225**	5043 **218**	6462 **210**	7863 **203**	9238 **194**	10588 **183**
25	626 **303**	1955 **294**	3359 **284**	4771 **274**	6251 **265**	7608 **256**	8998 **246**	10360 **236**

TORQUE (LB IN) 7608
SPEED (RPM) 256

☐ Cont. ☐ Int.

Intermittent operation rating applies to 10% of every minute.

Fonctionnement interm. 10% max. de chaque minute d`utilisation.

Performance data based on testing using 10W40 oil with a viscosity of 200 SUS at 54° C (130° F.). Performance data is typical. Actual data may vary slightly from one production motor to another.

Les donnees sur les performances sont basees sur des tests utilisant de l'huile 10W40 d'une viscosite de 200 SUS a 54°C (130°F). Ces donnees correspondent a des situations typiques. Les donnees reelles peuvent varier legerement d'un moteur de production a l'autre.

Intermittierende Werte maximal 10% von jeder Betriebsminute.

Capacidad de funcionamiento intermitente valida para 10% por cada minuto.

Leistungsdaten sind gemessen mit SAE 10W40 bei einer Viskositaet von 43,1 Cst bei 54°C. Geringfuegige Abweichungen von den Katalogdaten sind moeglich.

Datos tecnicos obtenidos con aceite 10W40 de 200 SUS de viscosidad a 54°C (130°F). Los datos proporcionados son valores tipcos. Los valores exactos reales podrian tener una pequena variacion entre distintos motores.

WARNING
This product can expose you to chemicals including lead and DEHP, which are known to the State of California to cause cancer, and birth defects or other reproductive harm. For more information go to www.p65warnings.ca.gov

Tel: +45 63 12 83 00 | Email: ps@hymatik.com | www.hymatik.com | Hvidkaervej 27a, DK-5250 Odense SV, Denmark

THK 0335

20.6 cu in / rev

PRESSURE (PSID)

Flow (GPM)	500	1000	1500	2000	2500	3000	3500	4000
.5	1297 **4**	2699 **3**	4128 **1**	5584 **1**				
1	1329 **10**	2741 **8**	4176 **7**	5630 **5**	7084 **4**	8551 **2**	10036 **2**	11496 **1**
2	1369 **21**	2832 **19**	4308 **17**	5787 **15**	7265 **13**	8718 **11**	10136 **9**	11534 **8**
3	1366 **32**	2838 **30**	4326 **27**	5817 **25**	7301 **22**	8781 **20**	10248 **17**	11685 **14**
4	1368 **43**	2858 **40**	4358 **38**	5861 **35**	7358 **32**	8850 **29**	10317 **25**	11748 **22**
5	1355 **54**	2858 **51**	4368 **48**	5880 **45**	7386 **42**	8880 **38**	10352 **34**	11791 **30**
7	1323 **76**	2840 **73**	4363 **69**	5888 **65**	7407 **61**	8908 **57**	10384 **53**	11829 **47**
9	1266 **98**	2791 **94**	4326 **90**	5856 **85**	7376 **81**	8884 **76**	10372 **71**	11834 **64**
12	1177 **131**	2698 **127**	4230 **121**	5759 **116**	7273 **110**	8773 **105**	10261 **98**	11726 **90**
15	1075 **165**	2594 **159**	4127 **153**	5654 **146**	7170 **140**	8670 **134**	10153 **126**	11613 **116**
20	833 **221**	2372 **214**	3915 **205**	5463 **197**	7008 **189**	8533 **182**	10026 **173**	11479 **161**
25	678 **277**	2142 **269**	3663 **259**	5189 **248**	6726 **239**	8257 **230**	9757 **219**	11219 **209**

TORQUE (LB IN) 9757
SPEED (RPM) 219

☒ Cont. ☐ Int.

Intermittent operation rating applies to 10% of every minute.

Fonctionnement interm. 10% max. de chaque minute d`utilisation.

Performance data based on testing using 10W40 oil with a viscosity of 200 SUS at 54° C (130° F.). Performance data is typical. Actual data may vary slightly from one production motor to another.

Les donnees sur les performances sont basees sur des tests utilisant de l'huile 10W40 d'une viscosite de 200 SUS a 54°C (130°F). Ces donnees correspondent a des situations typiques. Les donnees reelles peuvent varier legerement d'un moteur de production a l'autre.

Intermittierende Werte maximal 10% von jeder Betriebsminute.

Capacidad de funcionamiento intermitente valida para 10% por cada minuto.

Leistungsdaten sind gemessen mit SAE 10W40 bei einer Viskositaet von 43,1 Cst bei 54°C. Geringfuegige Abweichungen von den Katalogdaten sind moeglich.

Datos tecnicos obtenidos con aceite 10W40 de 200 SUS de viscosidad a 54°C (130°F). Los datos proporcionados son valores tipcos. Los valores exactos reales podrian tener una pequena variacion entre distintos motores.

WARNING
This product can expose you to chemicals including lead and DEHP, which are known to the State of California to cause cancer, and birth defects or other reproductive harm. For more information go to www.p65warnings.ca.gov

Tel: +45 63 12 83 00 | Email: ps@hymatik.com | www.hymatik.com | Hvidkaervej 27a, DK-5250 Odense SV, Denmark

THK 0360

360 cm³ / rev (22.2 in³ / rev)

PRESSURE (PSID)

Flow (GPM)	500	1000	1500	2000	2500	3000	3500
.5	1386 **4**	2883 **3**	4410 **1**	5965 **1**			
1	1420 **9**	2928 **7**	4461 **7**	6014 **5**	7567 **4**	9135 **2**	10721 **2**
2	1462 **20**	3025 **18**	4602 **16**	6182 **14**	7761 **12**	9313 **10**	10828 **8**
3	1459 **30**	3031 **28**	4621 **25**	6214 **23**	7799 **21**	9380 **19**	10947 **16**
4	1461 **40**	3053 **37**	4655 **36**	6261 **33**	7884 **30**	9454 **27**	11021 **23**
5	1447 **51**	3053 **48**	4666 **45**	6281 **42**	7890 **39**	9486 **36**	11059 **32**
7	1413 **71**	3034 **68**	4661 **65**	6290 **61**	7913 **57**	9516 **53**	11093 **50**
9	1352 **92**	2981 **88**	4621 **84**	6256 **80**	7879 **76**	9490 **71**	11080 **66**
12	1257 **123**	2882 **119**	4519 **113**	6152 **109**	7769 **103**	9372 **98**	10961 **92**
15	1148 **154**	2771 **149**	4409 **143**	6040 **137**	7659 **131**	9262 **125**	10846 **118**
20	890 **207**	2534 **200**	4182 **192**	5836 **184**	7486 **177**	9115 **170**	10710 **162**
25	724 **259**	2288 **252**	3913 **242**	5543 **232**	7185 **224**	8821 **215**	10423 **205**

TORQUE (LB IN) 8821
SPEED (RPM) 215

☒ Cont. ☐ Int.

Intermittent operation rating applies to 10% of every minute.

Fonctionnement interm. 10% max. de chaque minute d`utilisation.

Performance data based on testing using 10W40 oil with a viscosity of 200 SUS at 54° C (130° F.). Performance data is typical. Actual data may vary slightly from one production motor to another.

Les donnees sur les performances sont basees sur des tests utilisant de l'huile 10W40 d'une viscosite de 200 SUS a 54°C (130°F). Ces donnees correspondent a des situations typiques. Les donnees reelles peuvent varier legerement d'un moteur de production a l'autre.

Intermittierende Werte maximal 10% von jeder Betriebsminute.

Capacidad de funcionamiento intermitente valida para 10% por cada minuto.

Leistungsdaten sind gemessen mit SAE 10W40 bei einer Viskositaet von 43,1 Cst bei 54°C. Geringfuegige Abweichungen von den Katalogdaten sind moeglich.

Datos tecnicos obtenidos con aceite 10W40 de 200 SUS de viscosidad a 54°C (130°F). Los datos proporcionados son valores tipcos. Los valores exactos reales podrian tener una pequena variacion entre distintos motores.

WARNING
This product can expose you to chemicals including lead and DEHP, which are known to the State of California to cause cancer, and birth defects or other reproductive harm. For more information go to www.p65warnings.ca.gov

THK 0405

24.7 cu in / rev

PRESSURE (PSID)

Flow (GPM)	500	1000	1500	2000	2500	3000	3500
.5	1544 **4**	3178 **3**	4840 **2**	6515 **1**	8185 **1**		
1	1593 **8**	3256 **7**	4928 **6**	6607 **6**	8303 **5**	9987 **4**	11652 **3**
2	1636 **17**	3351 **16**	5084 **15**	6817 **14**	8550 **13**	10272 **12**	11978 **11**
3	1637 **27**	3365 **25**	5106 **23**	6847 **22**	8588 **21**	10314 **19**	12031 **18**
4	1645 **36**	3394 **34**	5159 **32**	6920 **30**	8668 **29**	10402 **27**	12130 **26**
5	1640 **45**	3408 **43**	5201 **41**	6983 **39**	8733 **37**	10466 **35**	12194 **33**
7	1606 **64**	3396 **61**	5211 **59**	7003 **56**	8772 **54**	10527 **51**	12271 **49**
9	1551 **82**	3350 **80**	5176 **77**	6981 **73**	8763 **70**	10519 **67**	12269 **64**
12	1428 **110**	3238 **107**	5075 **103**	6888 **99**	8670 **95**	10424 **91**	12172 **88**
15	1310 **138**	3112 **135**	4948 **130**	6759 **125**	8545 **120**	10306 **115**	12060 **111**
20	1136 **185**	2862 **181**	4692 **175**	6518 **168**	8336 **162**	10122 **156**	11877 **151**
25			4492 **219**	6303 **212**	8084 **204**	9848 **197**	11585 **190**

TORQUE (LB IN) 9848
SPEED (RPM) 197

■ Cont. □ Int.

Intermittent operation rating applies to 10% of every minute.

Fonctionnement interm. 10% max. de chaque minute d`utilisation.

Performance data based on testing using 10W40 oil with a viscosity of 200 SUS at 54° C (130° F.). Performance data is typical. Actual data may vary slightly from one production motor to another.

Les donnees sur les performances sont basees sur des tests utilisant de l'huile 10W40 d'une viscosite de 200 SUS a 54°C (130°F). Ces donnees correspondent a des situations typiques. Les donnees reelles peuvent varier legerement d'un moteur de production a l'autre.

Intermittierende Werte maximal 10% von jeder Betriebsminute.

Capacidad de funcionamiento intermitente valida para 10% por cada minuto.

Leistungsdaten sind gemessen mit SAE 10W40 bei einer Viskositaet von 43,1 Cst bei 54°C. Geringfuegige Abweichungen von den Katalogdaten sind moeglich.

Datos tecnicos obtenidos con aceite 10W40 de 200 SUS de viscosidad a 54°C (130°F). Los datos proporcionados son valores tipcos. Los valores exactos reales podrian tener una pequena variacion entre distintos motores.

WARNING
This product can expose you to chemicals including lead and DEHP, which are known to the State of California to cause cancer, and birth defects or other reproductive harm. For more information go to www.p65warnings.ca.gov

Tel: +45 63 12 83 00 | Email: ps@hymatik.com | www.hymatik.com | Hvidkaervej 27a, DK-5250 Odense SV, Denmark

THK 0475

29.1 cu in / rev

PRESSURE (PSID)

Flow (GPM)	500	1000	1500	2000	2500	3000
.5	1768 **3**	3732 **3**	5733 **2**	7744 **1**	9762 **1**	
1	1868 **7**	3878 **7**	5879 **6**	7851 **5**	9838 **4**	11830 **3**
2	1964 **15**	4055 **14**	6180 **14**	8237 **12**	10241 **10**	12136 **8**
3	1972 **23**	4074 **22**	6208 **21**	8321 **19**	10379 **17**	12355 **13**
4	2005 **31**	4135 **30**	6287 **29**	8382 **27**	10463 **24**	12496 **20**
5	2004 **39**	4129 **38**	6304 **37**	8428 **34**	10514 **31**	12544 **26**
7	1990 **55**	4133 **54**	6308 **52**	8445 **50**	10555 **45**	12602 **40**
9	1924 **70**	4104 **69**	6285 **68**	8430 **65**	10528 **60**	12608 **54**
12	1775 **94**	3974 **93**	6157 **91**	8328 **87**	10446 **82**	12528 **75**
15	1619 **118**	3784 **116**	5990 **114**	8188 **110**	10311 **104**	12372 **96**
20	1314 **157**	3373 **156**	5629 **153**	7853 **149**	10038 **141**	12145 **132**
25	1141 **197**	3029 **196**	5220 **193**	7427 **189**	9629 **182**	11757 **174**
30	606 **237**	2505 **236**	4649 **233**	6766 **230**	8878 **224**	10989 **219**

TORQUE (LB IN) 6766
SPEED (RPM) 230

☒ Cont. ☐ Int.

Intermittent operation rating applies to 10% of every minute.

Fonctionnement interm. 10% max. de chaque minute d`utilisation.

Performance data based on testing using 10W40 oil with a viscosity of 200 SUS at 54° C (130° F.). Performance data is typical. Actual data may vary slightly from one production motor to another.

Les donnees sur les performances sont basees sur des tests utilisant de l'huile 10W40 d'une viscosite de 200 SUS a 54°C (130°F). Ces donnees correspondent a des situations typiques. Les donnees reelles peuvent varier legerement d'un moteur de production a l'autre.

Intermittierende Werte maximal 10% von jeder Betriebsminute.

Capacidad de funcionamiento intermitente valida para 10% por cada minuto.

Leistungsdaten sind gemessen mit SAE 10W40 bei einer Viskositaet von 43,1 Cst bei 54°C. Geringfuegige Abweichungen von den Katalogdaten sind moeglich.

Datos tecnicos obtenidos con aceite 10W40 de 200 SUS de viscosidad a 54°C (130°F). Los datos proporcionados son valores tipcos. Los valores exactos reales podrian tener una pequena variacion entre distintos motores.

WARNING
This product can expose you to chemicals including lead and DEHP, which are known to the State of California to cause cancer, and birth defects or other reproductive harm. For more information go to www.p65warnings.ca.gov

Tel: +45 63 12 83 00 | Email: ps@hymatik.com | www.hymatik.com | Hvidkaervej 27a, DK-5250 Odense SV, Denmark

THK 0530

32.2 cu in / rev

Flow (GPM)	PRESSURE (PSID) 500	1000	1500	2000	2500
.5	2080 **3**	4256 **3**	6479 **2**	8726 **2**	11012 **1**
1	2158 **7**	4372 **6**	6592 **6**	8779 **5**	10994 **4**
2	2246 **14**	4567 **13**	6869 **12**	9126 **11**	11376 **9**
3	2242 **21**	4578 **20**	6916 **19**	9237 **17**	11500 **14**
4	2253 **28**	4625 **27**	6977 **25**	9296 **23**	11586 **20**
5	2235 **35**	4629 **34**	7002 **32**	9333 **29**	11626 **26**
7	2182 **49**	4599 **48**	7006 **46**	9362 **42**	11659 **38**
9	2095 **63**	4535 **62**	6960 **59**	9330 **55**	11650 **50**
12	1943 **85**	4390 **83**	6825 **80**	9217 **75**	11549 **69**
15	1753 **106**	4199 **104**	6638 **100**	9052 **95**	11408 **87**
20	1327 **141**	3783 **139**	6262 **135**	8701 **129**	11086 **120**
25	1011 **177**	3300 **175**	5751 **171**	8210 **165**	10639 **158**
30	269 **213**	2698 **211**	5083 **208**	7415 **203**	9814 **197**

TORQUE (LB IN) 9814
SPEED (RPM) 197

☒ Cont. ☐ Int.

Intermittent operation rating applies to 10% of every minute.

Fonctionnement interm. 10% max. de chaque minute d`utilisation.

Performance data based on testing using 10W40 oil with a viscosity of 200 SUS at 54° C (130° F.). Performance data is typical. Actual data may vary slightly from one production motor to another.

Les donnees sur les performances sont basees sur des tests utilisant de l'huile 10W40 d'une viscosite de 200 SUS a 54°C (130°F). Ces donnees correspondent a des situations typiques. Les donnees reelles peuvent varier legerement d'un moteur de production a l'autre.

Intermittierende Werte maximal 10% von jeder Betriebsminute.

Capacidad de funcionamiento intermitente valida para 10% por cada minuto.

Leistungsdaten sind gemessen mit SAE 10W40 bei einer Viskositaet von 43,1 Cst bei 54°C. Geringfuegige Abweichungen von den Katalogdaten sind moeglich.

Datos tecnicos obtenidos con aceite 10W40 de 200 SUS de viscosidad a 54°C (130°F). Los datos proporcionados son valores tipcos. Los valores exactos reales podrian tener una pequena variacion entre distintos motores.

⚠ **WARNING**
This product can expose you to chemicals including lead and DEHP, which are known to the State of California to cause cancer, and birth defects or other reproductive harm. For more information go to www.p65warnings.ca.gov

Tel: +45 63 12 83 00 | Email: ps@hymatik.com | www.hymatik.com | Hvidkaervej 27a, DK-5250 Odense SV, Denmark

THK 0625

38.0 cu in / rev

Flow (GPM)	PRESSURE (PSID) 500	1000	1500	1750	2250
.5	1939 **2**	4593 **1**			
1	2087 **5**	4665 **3**	7283 **2**	8680 **2**	11579 **1**
2	2338 **11**	4991 **9**	7590 **8**	8853 **7**	11458 **5**
3	2386 **17**	5101 **15**	7753 **13**	9055 **12**	11689 **9**
4	2457 **23**	5202 **21**	7872 **19**	9174 **17**	11769 **14**
5	2479 **29**	5246 **27**	7943 **25**	9242 **23**	11821 **18**
7	2464 **41**	5273 **39**	7995 **36**	9306 **34**	11859 **28**
9	2401 **53**	5223 **51**	7993 **48**	9337 **45**	11935 **39**
12	2254 **71**	5092 **69**	7886 **65**	9239 **62**	11900 **54**
15	2052 **89**	4901 **87**	7721 **83**	9086 **80**	11763 **70**
20	1600 **120**	4490 **117**	7334 **112**	8725 **109**	11424 **98**
25	1063 **151**	3933 **148**	6818 **144**	8235 **140**	11021 **131**
30	359 **182**	3250 **180**	6074 **176**	7443 **172**	10179 **165**

TORQUE (LB IN) 7443
SPEED (RPM) 172

☐ Cont. ☐ Int.

Intermittent operation rating applies to 10% of every minute.

Fonctionnement interm. 10% max. de chaque minute d`utilisation.

Performance data based on testing using 10W40 oil with a viscosity of 200 SUS at 54° C (130° F.). Performance data is typical. Actual data may vary slightly from one production motor to another.

Les donnees sur les performances sont basees sur des tests utilisant de l'huile 10W40 d'une viscosite de 200 SUS a 54°C (130°F). Ces donnees correspondent a des situations typiques. Les donnees reelles peuvent varier legerement d'un moteur de production a l'autre.

Intermittierende Werte maximal 10% von jeder Betriebsminute.

Capacidad de funcionamiento intermitente valida para 10% por cada minuto.

Leistungsdaten sind gemessen mit SAE 10W40 bei einer Viskositaet von 43,1 Cst bei 54°C. Geringfuegige Abweichungen von den Katalogdaten sind moeglich.

Datos tecnicos obtenidos con aceite 10W40 de 200 SUS de viscosidad a 54°C (130°F). Los datos proporcionados son valores tipcos. Los valores exactos reales podrian tener una pequena variacion entre distintos motores.

WARNING
This product can expose you to chemicals including lead and DEHP, which are known to the State of California to cause cancer, and birth defects or other reproductive harm. For more information go to www.p65warnings.ca.gov

Tel: +45 63 12 83 00 | Email: ps@hymatik.com | www.hymatik.com | Hvidkaervej 27a, DK-5250 Odense SV, Denmark

THK 0785

48.0 cu in / rev

PRESSURE (PSID)

Flow (GPM)	500	1000	1500	2000
.5	2910 **2**	6153 **2**	9607 **1**	12950 **1**
1	3011 **4**	6296 **4**	9670 **3**	12919 **3**
2	3217 **9**	6536 **8**	9935 **7**	13060 **6**
3	3220 **14**	6613 **13**	9977 **11**	13079 **9**
4	3265 **19**	6679 **17**	10021 **15**	13078 **13**
5	3263 **23**	6703 **22**	10047 **19**	13103 **16**
7	3218 **33**	6722 **31**	10068 **28**	13062 **24**
9	3107 **43**	6664 **41**	10108 **36**	13185 **31**
12	2892 **57**	6489 **55**	9959 **49**	13082 **42**
15	2643 **71**	6238 **69**	9733 **62**	12938 **54**
20	2044 **95**	5673 **92**	9239 **85**	12636 **75**
25	2313 **119**	4976 **117**	8571 **110**	12073 **101**
30	496 **143**	4104 **141**	7582 **137**	11024 **130**

TORQUE (LB IN) 11024
SPEED (RPM) 130

THK 0960

58.5 cu in / rev

PRESSURE (PSID)

Flow (GPM)	500	1000	1500
.5	3692 **2**	7712 **1**	11750 **1**
1	3788 **3**	7858 **3**	11895 **3**
2	3900 **7**	8045 **7**	12058 **6**
3	3905 **11**	8078 **11**	12135 **10**
4	3939 **15**	8155 **14**	12210 **13**
5	3923 **19**	8173 **18**	12238 **17**
7	3860 **27**	8160 **26**	12262 **24**
9	3733 **35**	8074 **34**	12224 **31**
12	3475 **47**	7848 **45**	12062 **42**
15	3149 **58**	7545 **57**	11823 **53**
20	2437 **78**	6843 **76**	11227 **72**
25	2969 **98**	5990 **96**	10360 **92**
30	603 **118**	4919 **117**	9170 **113**

TORQUE (LB IN) 9170
SPEED (RPM) 113

☒ Cont. ☐ Int.

Intermittent operation rating applies to 10% of every minute.

Fonctionnement interm. 10% max. de chaque minute d`utilisation.

Performance data based on testing using 10W40 oil with a viscosity of 200 SUS at 54° C (130° F.). Performance data is typical. Actual data may vary slightly from one production motor to another.

Les donnees sur les performances sont basees sur des tests utilisant de l'huile 10W40 d'une viscosite de 200 SUS a 54°C (130°F). Ces donnees correspondent a des situations typiques. Les donnees reelles peuvent varier legerement d'un moteur de production a l'autre.

Intermittierende Werte maximal 10% von jeder Betriebsminute.

Capacidad de funcionamiento intermitente valida para 10% por cada minuto.

Leistungsdaten sind gemessen mit SAE 10W40 bei einer Viskositaet von 43,1 Cst bei 54°C. Geringfuegige Abweichungen von den Katalogdaten sind moeglich.

Datos tecnicos obtenidos con aceite 10W40 de 200 SUS de viscosidad a 54°C (130°F). Los datos proporcionados son valores tipcos. Los valores exactos reales podrian tener una pequena variacion entre distintos motores.

WARNING
This product can expose you to chemicals including lead and DEHP, which are known to the State of California to cause cancer, and birth defects or other reproductive harm. For more information go to www.p65warnings.ca.gov

Flange Mount / Standardgehäuse
Monture à bride(s) / Montaje de brida

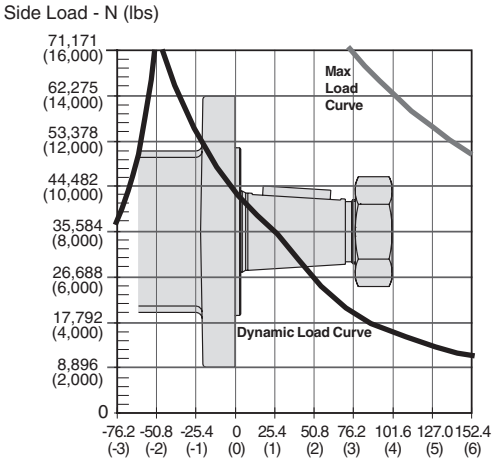

The dynamic side load curve is based on uni-directional steady state loads for L_{10} bearing life at 6 x 10^6 revolutions.
Die zulässige auslegbare radiale Wellenbelastungskurve ist unter ruhenden, einseitig statisch gerichteten Lastverhältnissen auf eine L_{10} Lebensdauer mit 6 x 10^6 Umdrehungen kalkuliert.
La courbe de charge latérale permise se base sur des charges unidirectionnelles en régime permanent pour le roulement L_{10} à 6 x 10^6 révolutions.
La curva de valores admisibles de carga lateral está basada en cargas constantes para cojinetes L_{10} a 6 x 10^6 revoluciones.

Wheel Mount / Radnabengehäuse
Monture à roue / Montaje de rueda

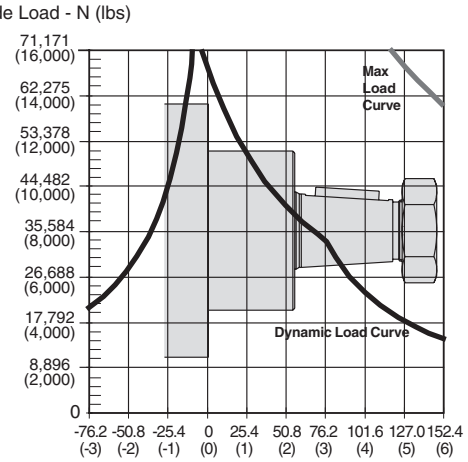

The maximum load curve is defined by bearing static load capacity. This curve should not be exceeded at any time including shock loads.
Die maximale radiale Wellenbelastungskurve ist definiert als maximale statische Last ohne Drehzahl. Sie gilt als Grenze und sollte keinesfalls überschritten werden.
La courbe de charge maximale est définie par la capacité de charge statique portante. Cette courbe ne devrait être dépassée en aucun moment y compris pour les charges par à-coups.
La curva de carga máxima queda definida por la capacidad de carga estática del cojinete. No se deben superar los valores de esta curva, ni siquiera con cargas provisorias de impacto.

Equation to Calculate the Expected Radial Bearing Life
Gleichung zur Ermittlung der Lagerlebensdauer

Equation to calculate the dynamic bearing life for a given load:
Bestimmung der erlaubten radialen Wellenbelastung mit vorgegebener Last

Use F_a, F_b and S in equation to determine hours of L_{10} bearing life.
Die Lebensdauer in Stunden ergibt sich durch einsetzen von F_a, F_b, und S in die nachstehende Formel.

$$L = \frac{6 \times 10^6}{60 \times S} \left\{ \frac{F_a}{F_b} \right\}^{3.33}$$

Where / Mit:

S = Shaft Speed RPM / Abtriebswellendrehzahl in min^{-1}
L = Life In Hours / Lebensdauer in Stunden
F_a = Dynamic side load defined by above curve at a distance from mounting flange. / Erlaubte radiale Wellenbelastung als Function der Laenge
F_b = Application side load. / Anwendungsseitige Wellenbelastung

Note: Calculations are based on L_{10} bearing life per ISO 281.
Auslegung basiert auf einer L_{10} Lenbendauer nach ISO 281.

WARNING
This product can expose you to chemicals including lead and DEHP, which are known to the State of California to cause cancer, and birth defects or other reproductive harm. For more information go to www.p65warnings.ca.gov

Tel: +45 63 12 83 00 | Email: ps@hymatik.com | www.hymatik.com | Hvidkaervej 27a, DK-5250 Odense SV, Denmark

Code: MS

Magneto, 7/8-14 SAE O-Ring

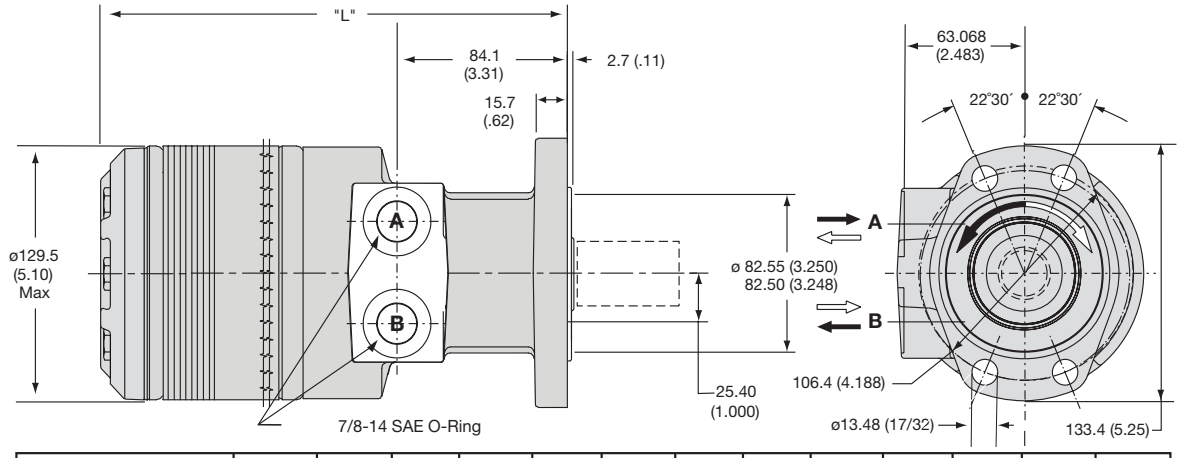

Code MS disp.	0140	0170	0195	0240	0280	0310	0335	0405	0475	0530	0625	0785	0960
Weight/Gewicht kg	**14.7**	**14.9**	**15.2**	**15.5**	**15.9**	**16.3**	**16.1**	**16.9**	**17.6**	**18.3**	**19.0**	**20.6**	**22.3**
Poids/Peso (lb)	(32.3)	(32.8)	(33.4)	(34.2)	(35.1)	(35.9)	(35.4)	(37.3)	(38.7)	(40.4)	(41.9)	(45.4)	(49.1)
Length "L" mm	**215.9**	**218.9**	**222.3**	**227.1**	**231.6**	**238.0**	**235.0**	**245.4**	**254.0**	**260.4**	**269.7**	**288.8**	**307.8**
"L" (in)	(8.50)	(8.62)	(8.75)	(8.94)	(9.12)	(9.37)	(9.25)	(9.66)	(10.00)	(10.25)	(10.62)	(11.37)	(12.12)

Code: US

Wheel, Standard, 7/8-14 SAE O-Ring

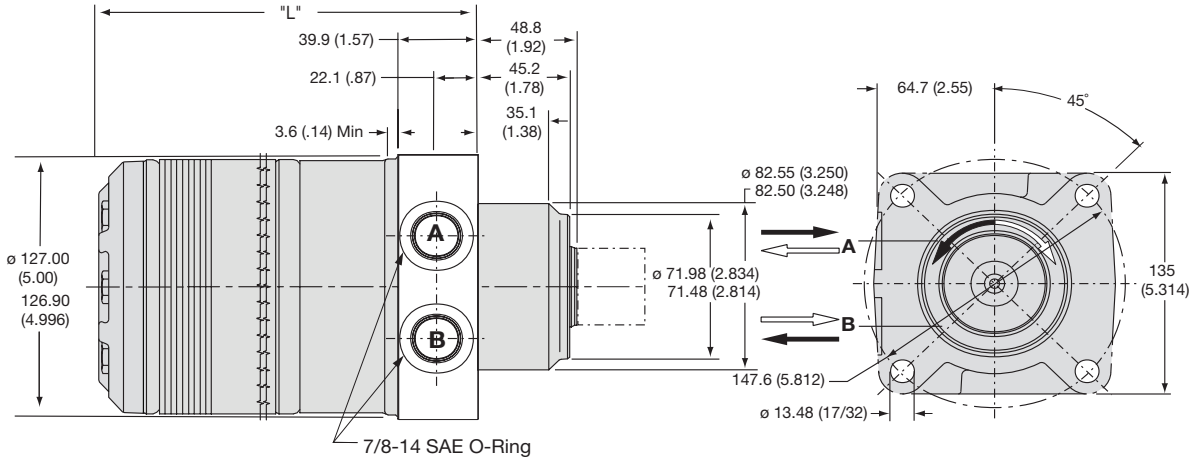

Code US disp.	0140	0170	0195	0240	0280	0310	0335	0405	0475	0530	0625	0785	0960
Weight/Gewicht kg	**16.9**	**17.2**	**17.4**	**17.8**	**18.2**	**18.4**	**18.6**	**19.2**	**19.8**	**20.6**	**21.3**	**22.9**	**24.5**
Poids/Peso (lb)	(37.3)	(37.8)	(38.4)	(39.2)	(40.1)	(40.5)	(40.9)	(42.3)	(43.7)	(45.4)	(46.9)	(50.4)	(54.1)
Length "L" mm	**173.2**	**176.5**	**179.6**	**184.4**	**189.2**	**191.8**	**195.6**	**202.9**	**211.3**	**217.7**	**227.3**	**246.4**	**265.4**
"L" (in)	(6.82)	(6.95)	(7.07)	(7.26)	(7.45)	(7.55)	(7.70)	(7.99)	(8.32)	(8.57)	(8.95)	(9.70)	(10.45)

English equivalents for metric specifications are shown in ( ).

WARNING
This product can expose you to chemicals including lead and DEHP, which are known to the State of California to cause cancer, and birth defects or other reproductive harm. For more information go to www.p65warnings.ca.gov

Tel: +45 63 12 83 00 | Email: ps@hymatik.com | www.hymatik.com | Hvidkaervej 27a, DK-5250 Odense SV, Denmark

Code: PB

SAE "B" 4 Bolt, Rear 7/8-14 SAE O-Ring Radial

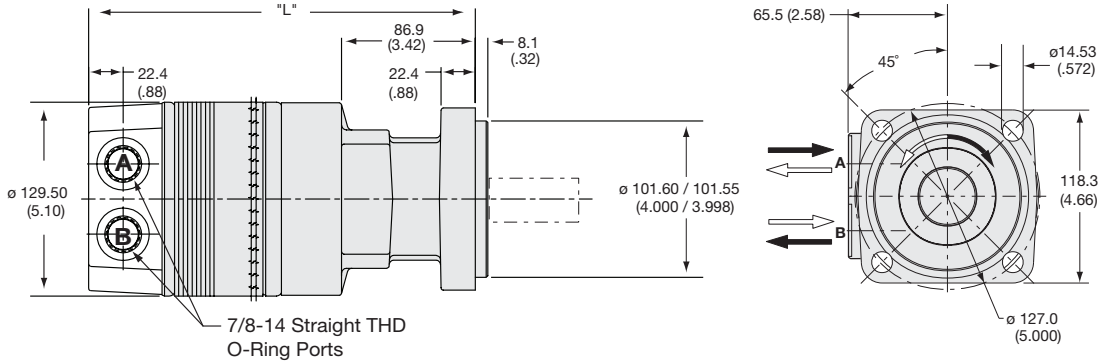

Code PB disp.	0140	0170	0195	0240	0280	0310	0335	0405	0475	0530	0625	0785	0960
Weight/Gewicht kg	**16.9**	**17.2**	**17.4**	**17.8**	**18.2**	**18.4**	**18.6**	**19.2**	**19.8**	**20.6**	**21.3**	**22.9**	**24.5**
Poids/Peso (lb)	(37.3)	(37.8)	(38.4)	(39.2)	(40.1)	(40.5)	(40.9)	(42.3)	(43.7)	(45.4)	(46.9)	(50.4)	(54.1)
Length "L" mm	**235.2**	**238.3**	**241.6**	**246.4**	**251.0**	**254.0**	**257.3**	**264.9**	**273.3**	**279.7**	**289.3**	**308.4**	**327.4**
"L" (in)	(9.26)	(9.38)	(9.51)	(9.70)	(9.88)	(10.0)	(10.13)	(10.43)	(10.76)	(11.01)	(11.39)	(12.14)	(12.89)

Code: KB

SAE CC 4 Bolt, Rear 7/8-14 SAE O-Ring Radial

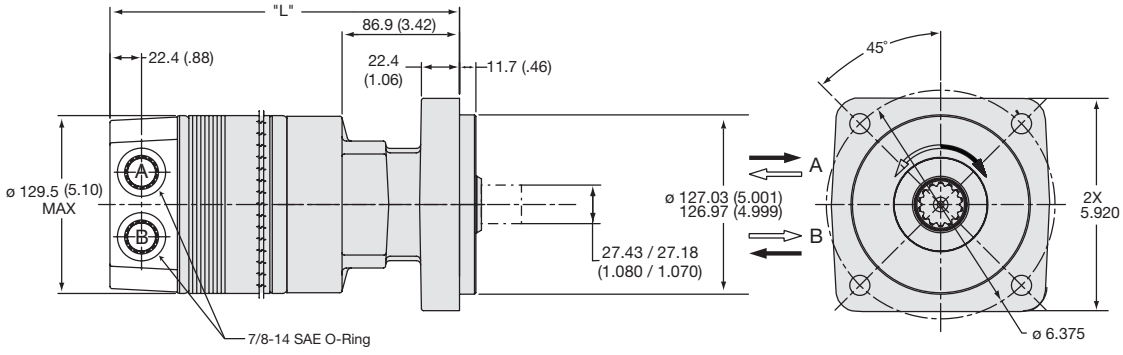

Code KB disp	0140	0170	0195	0240	0280	0310	0335	0405	0475	0530	0625	0785	0960
Weight/Gewicht kg	**19.4**	**19.4**	**19.9**	**20.3**	**20.7**	**20.9**	**21.0**	**21.7**	**22.3**	**23.1**	**23.8**	**25.4**	**27.0**
Poids/Peso (lb)	(42.8)	(43.3)	(43.9)	(44.7)	(45.6)	(46.0)	(46.4)	(47.8)	(49.2)	(50.9)	(52.4)	(55.9)	(59.6)
Length "L" mm	**231.9**	**235.2**	**238.3**	**243.1**	**247.9**	**251.0**	**254.3**	**261.6**	**270.0**	**276.4**	**286.0**	**305.1**	**324.1**
(in)	(9.13)	(9.26)	(9.38)	(9.57)	(9.76)	(9.88)	(10.01)	(10.3)	(10.63)	(10.88)	(11.26)	(12.01)	(12.76)

English equivalents for metric specifications are shown in ( ).

WARNING
This product can expose you to chemicals including lead and DEHP, which are known to the State of California to cause cancer, and birth defects or other reproductive harm. For more information go to www.p65warnings.ca.gov

Tel: +45 63 12 83 00 | Email: ps@hymatik.com | www.hymatik.com | Hvidkaervej 27a, DK-5250 Odense SV, Denmark

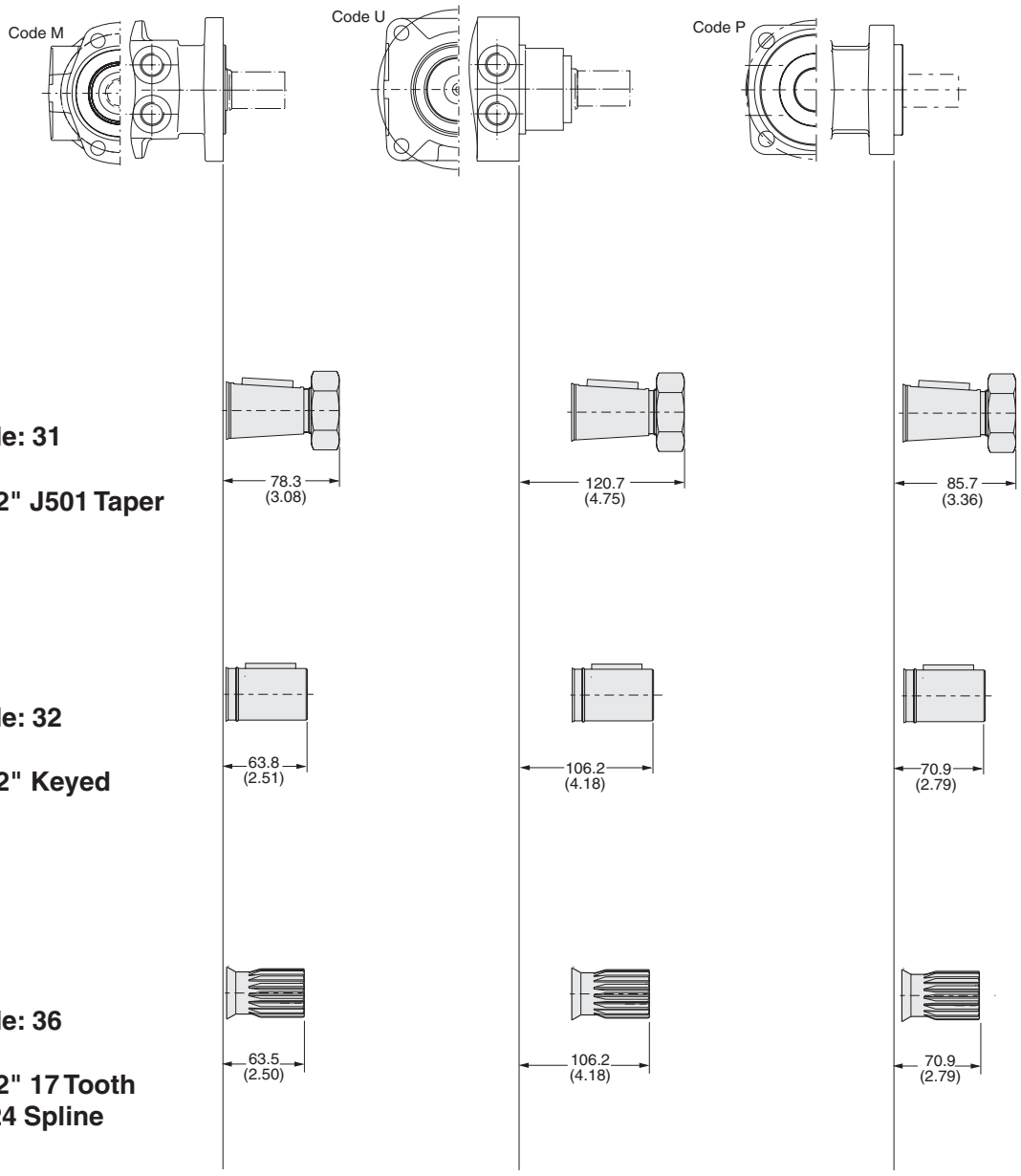

Code: 31

1 1/2" J501 Taper

Code: 32

1 1/2" Keyed

Code: 36

1 1/2" 17 Tooth
12/24 Spline

English equivalents for metric specifications are shown in ( ).

⚠ **WARNING**
This product can expose you to chemicals including lead and DEHP, which are known to the State of California to cause cancer, and birth defects or other reproductive harm. For more information go to www.p65warnings.ca.gov

Parker Hannifin Corporation
Pump & Motor Division
Greeneville, Tennessee, USA

Tel: +45 63 12 83 00 | Email: ps@hymatik.com | www.hymatik.com | Hvidkaervej 27a, DK-5250 Odense SV, Denmark

Code: 31

1 1/2" J501 Taper

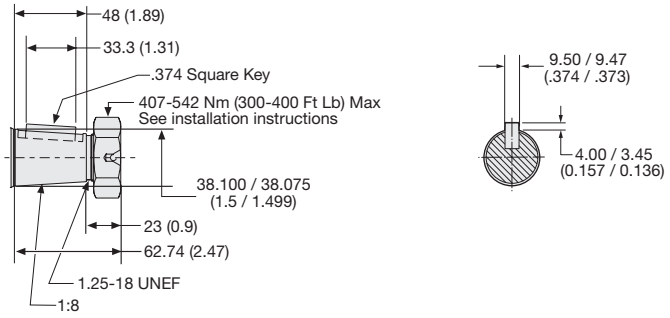

Code: 32

1 1/2" Keyed

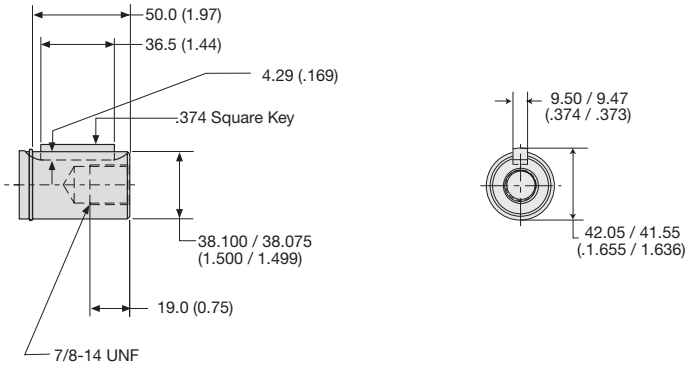

Code: 36

1 1/2" 17 Tooth
12/24 Spline

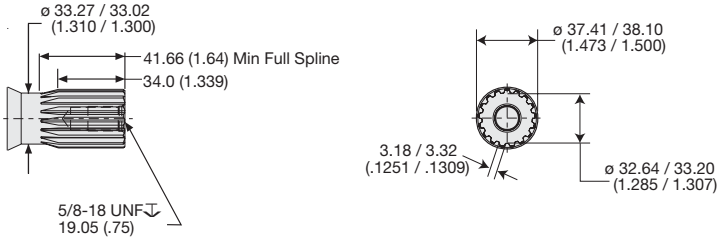

English equivalents for metric specifications are shown in ( ).

WARNING
This product can expose you to chemicals including lead and DEHP, which are known to the State of California to cause cancer, and birth defects or other reproductive harm. For more information go to www.p65warnings.ca.gov

7 Displacements		(15.3 to 61.0 in³/rev)
7 Schluckvolumen		**250 . . . 1000 cm³/rev**
Cylindrée		
7 Despazamientos		
	Cont.	**Int.**
Maximum Pressure	(3500 psid)	(4500 psid)
Eingangsdruck	**. . . 241 bar**	**. . . 310 bar**
Pression entrée		
Pressione in entrata		
Maximum Oil Flow		(60 gpm)
Schluckstrom		**. . . 227 lpm**
Débit d'huile		
Portata		
Maximum Speed		(523 rpm)
Drehzahl		**523 rpm**
Velocità di rotazione		
Vitesse de rotation		
	Cont.	**Int.**
Maximum Torque	(21360 lb in)	(23540 lb in)
MaxDrehmoment	**2413 Nm**	**2660 Nm**
Couple		
Coppia		
Maximum Side Load at Key		(5900 lb)
Seitenlast		**. . . 26245 N**
Charges latèrales		
Carico radiale		

Exceptional Strength and Durability in a High Performance Motor

The heart of Parker's TK Series powertrain, the Torqmotor™, is an extra heavy duty part that includes unique 60:40 spline geometry. Rugged construction throughout allows the transmission of over 23,000 lb-in of torque. The entire powertrain is continually washed in cool, high flow fluid to assure long life. Roller vanes and sealed commutator maintain high efficiency and provide smooth low speed performance.

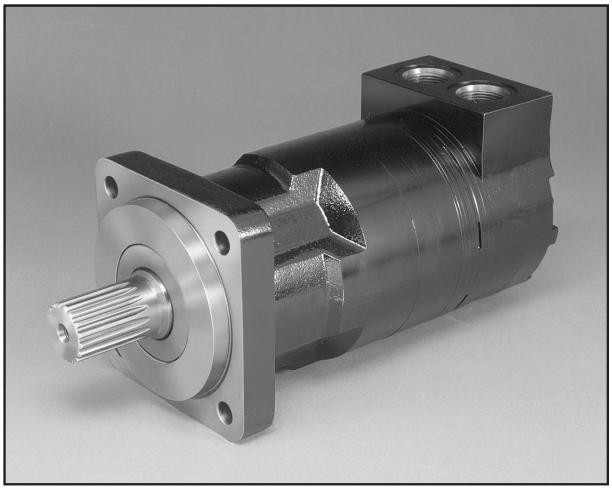

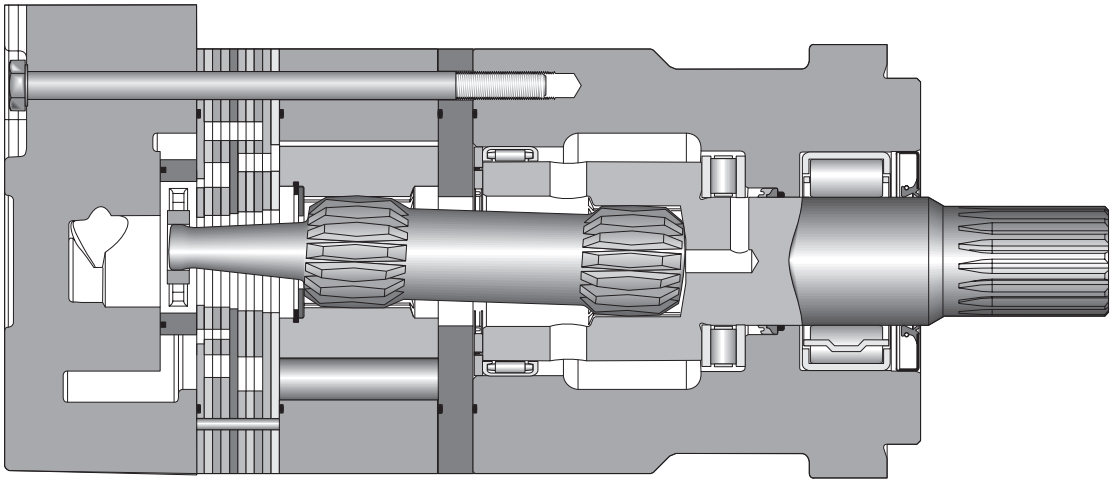

⚠ **WARNING**
This product can expose you to chemicals including lead and DEHP, which are known to the State of California to cause cancer, and birth defects or other reproductive harm. For more information go to www.p65warnings.ca.gov

Ordering Information / Bestellschlüssel
System de Commande / Imformacion para pedidos

LSHT Torqmotors™ and Nichols™ Motors
TK Series / Serie / Série
HY13-1590-011/US,EU

TK	XXXX	XX	XX	0	XXXX
Series	Displacement Schluckvolumen Cylindrée Desplazamiento	Mounting/Ports Gehäuse/Anschluß Carter/Plan de raccordement Montaje/Lumbreras	Shaft Welle Arbre Ejes	Rotation Drehrichtung Direction de rotation Rotacion	Options Opciones

Code	cm³/tr cm³/giro cm³/U	in³/rev
0250	250	15.3
0315	315	19.2
0400	400	24.4
0500	500	30.5
0630	630	38.4
0800	800	48.8
1000	1000	61.0

Code	Shaft
32	1 1/2" Keyed 
36	1 1/2" 17 Tooth 12/24 Spline 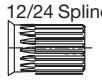
63	1 3/4" Tapered 
64	40mm Keyed 
Custom Order 62	14 Tooth Spline (12/24 P.), (SAE) 

Code	Rear Port Rotation
0	Standard 
1	Reverse Timed Manifold 

Code	Mounting
K4	Standard SAE CC 4 Bolt 3/4 Split Flange Rear Radial 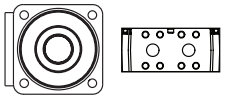
K5	Standard SAE CC 4 Bolt 1 5/16-12 SAE Rear Radial 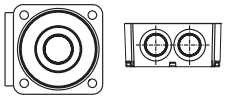
R4	SAE CC 4 Bolt Metric 3/4 Split Flange Rear Radial 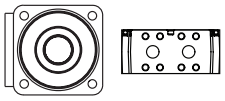
T5	Wheel Mount 1 5/16-12 SAE Rear Radial 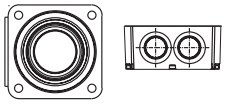
Custom Order T6	Wheel Mount W/ Brake Mount Nose, No Tapped Holes In Nose, G3/4 (3/4 BSPP) Rear Radial 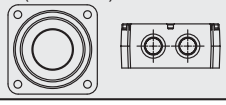

Code	Options
AAAA	"Standard", Black Paint (045134), Paint area all over except front and rear pilot and mounting flanges and shaft
AAAB	"Standard", No Paint
AAAC	"Standard", Double Paint (045247), Paint area all over except front and rear pilot and mounting flanges and shaft
AABJ	Free Running Rotor Set, Black paint (045134), Paint area all over except front and rear pilot and mounting flanges and shaft
AABT	Black paint (045134), Paint area all over except front and rear pilot and mounting flanges and shaft, No shaft hardware
AAFA	Fluorocarbon (Viton) Seals, High Temp Commutator Seal, No paint
AAFW	Fluorocarbon (Viton) Seals, High Temp Commutator Seal, Black paint (045134), Paint area all over except front and rear pilot and mounting flanges and shaft
AAJH	Fluorocarbon (Viton) Seals, High Temp Commutator Seal, Black paint (045134), Paint area all over except front and rear pilot and mounting flanges and shaft, No shaft hardware
AAJL	No paint, No shaft hardware
AAUP	Fluorocarbon (Viton) Seals, High Temp Commutator Seal, No Paint, No shaft Hardware
AAVE	Free Running Rotor Set, Fluorocarbon (Viton) Seals, High Temp Commutator Seal, Black Paint (045134), Paint area all over except front and rear pilot and mounting flanges and shaft
ABCW	Fluorocarbon (Viton) Seals, High Temperature Commutator Seal, Bidirectional shuttle (.062 Orifice) (11:00*), Black Paint (045134), Paint area all over except front and rear pilot and mounting flanges and shaft, No Shaft Hardware
ABCZ	Fluorocarbon (Viton) Seals, Double paint (045247), Paint area all over except front and rear pilot and mounting flanges and shaft
FSEK	Fluorocarbon (Viton) Seals, High Temperature Commutator Seal, Parker ECD Speed Sensor (455073), Black Paint (045134), Paint area all over except front and rear pilot and mounting flanges and shaft, No Shaft Hardware
FSEN	Fluorocarbon (Viton) Seals, High Temperature Commutator Seal, Parker ECD Speed Sensor (455073), No Paint, No Shaft Hardware

Shaded areas indicate custom order components. Standard pricing and delivery terms may not apply to these components. Please refer to the price list for details, or consult your Parker Pump Motor division Sales Resource.

WARNING
This product can expose you to chemicals including lead and DEHP, which are known to the State of California to cause cancer, and birth defects or other reproductive harm. For more information go to www.p65warnings.ca.gov

Tel: +45 63 12 83 00 | Email: ps@hymatik.com | www.hymatik.com | Hvidkaervej 27a, DK-5250 Odense SV, Denmark

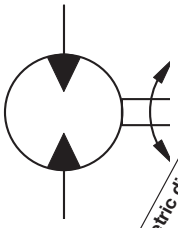

Motor Series TK	Geometric displacement Geom. Schluckvolumen Cylindrée Desplazamientos cm³/rev in³/rev	Max. speed @ Max. intermittent flow Max. Drehzahl Intermittierender Betrieb: Velocità di rotazione max Fonctionnement intermittent: Velocidad maxima a caudal intermitente maximo rev/min	Max. oil flow Max. Schluckstrom Débit d'huile maxi Caudal Maximo de Aceite cont / int* l/min g/min		Max. differential pressure Max. Druckgefälle Chute de pression maxi Presion diferencial maxima cont / int* bar psid		Max. supply pressure Max. Eingangsdruck Pression maxi entrée Presion maxima de alimentacion max bar psig	Max. torque Max. Drehmoment Couple maxi Torque Maximo cont / int* Nm lb-in		Max. performance Max. Leistungabgabe Puissance de sortie maxi Maximo redimiento max KW HP	Min. starting torque Min. Anlaufmoment Couple min. fourni au dé manrage Torque minimo de arranque cont / int* Nm lb-in	
TK 0250	**250** 15.3	523	**114** 30	**133** 35	**241** 3500	**310** 4500	**328** 4750	**814** 7204	**1043** 9234	**48.5** 65.0	**689** 6100	**879** 7780
TK 0315	**315** 19.2	413	**114** 30	**133** 35	**241** 3500	**310** 4500	**328** 4750	**1029** 9105	**1314** 11625	**47.4** 63.5	**949** 8400	**1217** 10770
TK 0400	**400** 24.4	373	**114** 30	**151** 40	**207** 3000	**276** 4000	**328** 4750	**1153** 10201	**1524** 13484	**48.7** 65.3	**1049** 9280	**1410** 12480
TK 0500	**500** 30.5	298	**114** 30	**151** 40	**207** 3000	**276** 4000	**328** 4750	**1439** 12736	**1914** 16940	**48.1** 64.5	**1322** 11700	**1783** 15780
TK 0630	**630** 38.4	237	**114** 30	**151** 40	**207** 3000	**224** 3250	**328** 4750	**1617** 14313	**1716** 15187	**33.7** 45.2	**1497** 13250	**1621** 14350
TK 0800	**800** 48.8	276	**151** 40	**227** 60	**190** 2750	**207** 3000	**328** 4750	**1916** 16960	**2300** 20360	**44.4** 59.5	**1745** 15440	**1902** 16834
TK 1000	**1000** 61.0	218	**151** 40	**227** 60	**172** 2500	**190** 2750	**328** 4750	**2413** 21360	**2660** 23540	**35.4** 47.5	**1981** 17535	**2180** 19290

Performance data based on testing using 10W40 oil with a viscosity of 200 SUS at 54° C (130° F.) Performance data is typical. Actual data may vary slightly from one production motor to another.

Les donnees sur les performances sont basees sur des tests utilisant de l'huile 10W40 d'une viscosite de 200 SUS a 54°C (130°F). Ces donnees correspondent a des situations typiques. Les donnees reelles peuvent varier legerement d'un moteur de production a l'autre.

Leistugsdaten sind gemessen mit SAE 10W40 bei einer Viskositaet von 43,1 Cst beo 54°C. Geringfuegige Abweichungen von den Katalogerten sond moeglich.

Datos tecnicos obtenidos con aceite 10W40 de 200 SUS de viscosidad a 54°C (130°F). Los datos proporcionados son valores tipcos. Los valores exactos reales podrian tener una pequena variacion entre distintos motores.

* Intermittent operation rating applies to 10% of every minute.
Intermittierende Werte maximal 10% von jeder Betriebsminute.
Fonctionnement interm. 10% max. de chaque minute d`utilisation.
Capacidad de funcionamiento intermitente valida para 10% por cada minuto.

WARNING
This product can expose you to chemicals including lead and DEHP, which are known to the State of California to cause cancer, and birth defects or other reproductive harm. For more information go to www.p65warnings.ca.gov

Tel: +45 63 12 83 00 | Email: ps@hymatik.com | www.hymatik.com | Hvidkaervej 27a, DK-5250 Odense SV, Denmark

TK 0250

15.3 cu in / rev

PRESSURE (PSID)

Flow (GPM)	500	1000	1500	2000	2500	3000	3500	4000	4500
.5	892 **5**	1838 **3**							
1	895 **12**	1834 **10**	2777 **7**	3729 **5**	4687 **4**	5366 **3**			
2	941 **27**	1922 **25**	2911 **21**	3900 **19**	4895 **18**	5614 **17**	6576 **16**	7551 **15**	8526 **14**
4	951 **57**	1959 **55**	2972 **51**	3988 **48**	5012 **46**	5932 **43**	6874 **40**	7824 **38**	8792 **37**
8	927 **118**	1960 **114**	2997 **110**	4035 **107**	5069 **103**	6121 **98**	7124 **95**	8114 **92**	9139 **89**
12	870 **178**	1913 **174**	2958 **170**	4008 **166**	5060 **161**	6167 **155**	7204 **149**	8221 **144**	9230 **139**
16	786 **239**	1841 **234**	2895 **229**	3943 **224**	4994 **219**	6147 **214**	7183 **209**	8203 **205**	9234 **199**
20	671 **299**	1731 **294**	2799 **289**	3855 **283**	4896 **278**	6088 **272**	7126 **267**	8159 **261**	9185 **255**
24	555 **359**	1600 **354**	2666 **349**	3739 **342**	4796 **336**	6001 **330**	7044 **324**	8075 **319**	9120 **314**
28	410 **419**	1457 **416**	2516 **409**	3585 **402**	4657 **395**	5887 **388**	6939 **380**	7967 **373**	8993 **366**
32	237 **479**	1294 **476**	2362 **469**	3424 **462**	4490 **455**	5747 **448**	6802 **441**	7806 **434**	8809 **426**
35	119 **523**	1157 **522**	2216 **514**	3296 **507**	4381 **499**	5647 **492**	6676 **484**	7661 **477**	8685 **470**

TORQUE (LB IN) 5647
SPEED (RPM) 492

■ Cont. □ Int.

Intermittent operation rating applies to 10% of every minute.

Fonctionnement interm. 10% max. de chaque minute d'utilisation.

Performance data based on testing using 10W40 oil with a viscosity of 200 SUS at 54° C (130° F.) Performance data is typical. Actual data may vary slightly from one production motor to another.

Les donnees sur les performances sont basees sur des tests utilisant de l'huile 10W40 d'une viscosite de 200 SUS a 54°C (130°F). Ces donnees correspondent a des situations typiques. Les donnees reelles peuvent varier legerement d'un moteur de production a l'autre.

Intermittierende Werte maximal 10% von jeder Betriebsminute.

Capacidad de funcionamiento intermitente valida para 10% por cada minuto.

Leistugsdaten sind gemessen mit SAE 10W40 bei einer Viskositaet von 43,1 Cst beo 54°C. Geringfuegige Abweichungen von den Katalogerten sond moeglich.

Datos tecnicos obtenidos con aceite 10W40 de 200 SUS de viscosidad a 54°C (130°F). Los datos proporcionados son valores tipcos. Los valores exactos reales podrian tener una pequena variacion entre distintos motores.

018 TK.indd, b

WARNING
This product can expose you to chemicals including lead and DEHP, which are known to the State of California to cause cancer, and birth defects or other reproductive harm. For more information go to www.p65warnings.ca.gov

Tel: +45 63 12 83 00 | Email: ps@hymatik.com | www.hymatik.com | Hvidkaervej 27a, DK-5250 Odense SV, Denmark

TK 0315

19.2 cu in / rev

PRESSURE (PSID)

Flow (GPM)	500	1000	1500	2000	2500	3000	3500	4000	4500
.5	1105 **5**	2300 **4**	3519 **3**						
1	1161 **11**	2342 **9**	3567 **9**	4786 **8**	6035 **8**	7319 **7**			
2	1210 **22**	2468 **21**	3728 **20**	4992 **19**	6222 **18**	7454 **17**	8675 **16**	9899 **15**	11104 **14**
4	1224 **46**	2512 **43**	3803 **41**	5094 **39**	6363 **37**	7623 **35**	8875 **33**	10108 **31**	11337 **30**
8	1201 **94**	2524 **91**	3853 **89**	5183 **86**	6498 **83**	7799 **80**	9084 **78**	10343 **77**	11587 **76**
12	1128 **142**	2458 **137**	3791 **133**	5134 **130**	6469 **127**	7793 **124**	9105 **121**	10383 **118**	11625 **117**
16	1021 **189**	2358 **184**	3702 **179**	5045 **176**	6390 **172**	7724 **168**	9043 **164**	10340 **161**	11601 **159**
20	890 **237**	2227 **232**	3580 **226**	4931 **222**	6278 **218**	7620 **214**	8942 **210**	10245 **205**	11520 **201**
24	739 **284**	2067 **280**	3419 **273**	4771 **268**	6123 **263**	7470 **259**	8798 **254**	10099 **249**	11374 **244**
28	586 **331**	1904 **327**	3249 **320**	4605 **314**	5953 **309**	7296 **304**	8636 **300**	9937 **293**	11222 **289**
32	397 **377**	1721 **374**	3087 **367**	4420 **361**	5757 **355**	7100 **350**	8447 **346**	9766 **339**	11057 **332**
35	240 **413**	1558 **410**	2897 **403**	4257 **395**	5606 **389**	6943 **383**	8284 **378**	9593 **371**	10888 **367**

TORQUE (LB IN) 6943
SPEED (RPM) 383

■ Cont. □ Int.

Intermittent operation rating applies to 10% of every minute.

Fonctionnement interm. 10% max. de chaque minute d'utilisation.

Performance data based on testing using 10W40 oil with a viscosity of 200 SUS at 54° C (130° F.) Performance data is typical. Actual data may vary slightly from one production motor to another.

Les donnees sur les performances sont basees sur des tests utilisant de l'huile 10W40 d'une viscosite de 200 SUS a 54°C (130°F). Ces donnees correspondent a des situations typiques. Les donnees reelles peuvent varier legerement d'un moteur de production a l'autre.

Intermittierende Werte maximal 10% von jeder Betriebsminute.

Capacidad de funcionamiento intermitente valida para 10% por cada minuto.

Leistugsdaten sind gemessen mit SAE 10W40 bei einer Viskositaet von 43,1 Cst beo 54°C. Geringfuegige Abweichungen von den Katalogerten sond moeglich.

Datos tecnicos obtenidos con aceite 10W40 de 200 SUS de viscosidad a 54°C (130°F). Los datos proporcionados son valores tipcos. Los valores exactos reales podrian tener una pequena variacion entre distintos motores.

WARNING
This product can expose you to chemicals including lead and DEHP, which are known to the State of California to cause cancer, and birth defects or other reproductive harm. For more information go to www.p65warnings.ca.gov

Tel: +45 63 12 83 00 | Email: ps@hymatik.com | www.hymatik.com | Hvidkaervej 27a, DK-5250 Odense SV, Denmark

TK 0400

24.4 cu in / rev

PRESSURE (PSID)

Flow (GPM)	500	1000	1500	2000	2500	3000	3500	4000
.5	1429 **4**	2974 **3**	4559 **3**	6201 **2**	7860 **2**	9483 **2**	11110 **2**	12511 **1**
1	1498 **8**	3029 **8**	4566 **7**	6173 **6**	7829 **6**	9479 **5**	11101 **5**	12648 **4**
2	1586 **17**	3211 **15**	4835 **14**	6466 **13**	8043 **12**	9590 **11**	11206 **10**	12865 **9**
4	1620 **36**	3295 **34**	4974 **32**	6652 **29**	8321 **28**	9962 **26**	11582 **25**	13052 **23**
8	1615 **73**	3334 **70**	5062 **68**	6790 **65**	8488 **63**	10160 **60**	11825 **58**	13301 **56**
12	1536 **110**	3282 **107**	5025 **105**	6764 **101**	8493 **98**	10201 **95**	11893 **92**	13462 **89**
16	1418 **148**	3171 **144**	4924 **141**	6676 **138**	8421 **134**	10150 **130**	11846 **127**	13484 **123**
20	1270 **185**	3022 **181**	4776 **178**	6537 **174**	8296 **170**	10037 **166**	11744 **161**	13432 **157**
24	1095 **222**	2846 **219**	4601 **215**	6371 **210**	8135 **206**	9876 **201**	11610 **197**	13405 **192**
28	907 **259**	2645 **256**	4397 **251**	6171 **247**	7937 **242**	9681 **237**	11430 **232**	13250 **228**
32	683 **297**	2420 **293**	4179 **288**	5951 **283**	7714 **278**	9467 **273**	11211 **268**	12923 **262**
35	501 **325**	2216 **322**	4007 **316**	5779 **311**	7529 **306**	9280 **300**	11020 **294**	12745 **289**
40	195 **373**	1908 **368**	3649 **362**	5417 **357**	7193 **351**	8961 **345**	10703 **339**	12390 **332**

TORQUE (LB IN) 8961
SPEED (RPM) 345

■ Cont. □ Int.

Intermittent operation rating applies to 10% of every minute.

Fonctionnement interm. 10% max. de chaque minute d'utilisation.

Performance data based on testing using 10W40 oil with a viscosity of 200 SUS at 54° C (130° F.) Performance data is typical. Actual data may vary slightly from one production motor to another.

Les donnees sur les performances sont basees sur des tests utilisant de l'huile 10W40 d'une viscosite de 200 SUS a 54°C (130°F). Ces donnees correspondent a des situations typiques. Les donnees reelles peuvent varier legerement d'un moteur de production a l'autre.

Intermittierende Werte maximal 10% von jeder Betriebsminute.

Capacidad de funcionamiento intermitente valida para 10% por cada minuto.

Leistugsdaten sind gemessen mit SAE 10W40 bei einer Viskositaet von 43,1 Cst beo 54°C. Geringfuegige Abweichungen von den Katalogerten sond moeglich.

Datos tecnicos obtenidos con aceite 10W40 de 200 SUS de viscosidad a 54°C (130°F). Los datos proporcionados son valores tipcos. Los valores exactos reales podrian tener una pequena variacion entre distintos motores.

WARNING
This product can expose you to chemicals including lead and DEHP, which are known to the State of California to cause cancer, and birth defects or other reproductive harm. For more information go to www.p65warnings.ca.gov

Tel: +45 63 12 83 00 | Email: ps@hymatik.com | www.hymatik.com | Hvidkaervej 27a, DK-5250 Odense SV, Denmark

TK 0500

30.5 cu in / rev

PRESSURE (PSID)

Flow (GPM)	500	1000	1500	2000	2500	3000	3500	4000
1	1880 **5**	3810 **4**	5826 **3**	7926 **2**	9000 **2**	11979 **2**	14077 **1**	16261 **1**
2	1982 **13**	4013 **11**	6067 **9**	8109 **8**	10154 **6**	12243 **5**	14323 **5**	16394 **5**
4	2000 **28**	4103 **26**	6223 **24**	8346 **22**	10464 **20**	12559 **18**	14642 **16**	16615 **14**
8	1971 **58**	4118 **56**	6276 **53**	8437 **50**	10584 **48**	12724 **45**	14852 **44**	16825 **40**
12	1876 **91**	4041 **87**	6219 **85**	8400 **80**	10575 **77**	12736 **73**	14873 **70**	16901 **66**
16	1724 **120**	3904 **115**	6088 **112**	8277 **109**	10461 **103**	12633 **101**	14801 **97**	16940 **93**
20	1537 **148**	3725 **145**	5911 **142**	8105 **138**	10301 **134**	12494 **130**	14660 **125**	16783 **121**
24	1318 **178**	3504 **175**	5694 **171**	7898 **167**	10108 **163**	12310 **159**	14481 **154**	16607 **149**
28	1066 **208**	3242 **205**	5430 **200**	7634 **196**	9856 **192**	12063 **188**	14232 **182**	16405 **177**
32	781 **238**	2959 **235**	5146 **230**	7357 **225**	9580 **221**	11781 **217**	13939 **211**	16110 **206**
35	551 **260**	2702 **258**	4940 **252**	7153 **248**	9335 **243**	11517 **239**	13703 **233**	15892 **228**
40	178 **298**	2341 **296**	4519 **290**	6746 **285**	8957 **280**	11041 **275**	13296 **269**	15400 **264**

TORQUE (LB IN) 11041
SPEED (RPM) 275

■ Cont. □ Int.

Intermittent operation rating applies to 10% of every minute.

Fonctionnement interm. 10% max. de chaque minute d'utilisation.

Performance data based on testing using 10W40 oil with a viscosity of 200 SUS at 54° C (130° F.) Performance data is typical. Actual data may vary slightly from one production motor to another.

Les donnees sur les performances sont basees sur des tests utilisant de l'huile 10W40 d'une viscosite de 200 SUS a 54°C (130°F). Ces donnees correspondent a des situations typiques. Les donnees reelles peuvent varier legerement d'un moteur de production a l'autre.

Intermittierende Werte maximal 10% von jeder Betriebsminute.

Capacidad de funcionamiento intermitente valida para 10% por cada minuto.

Leistugsdaten sind gemessen mit SAE 10W40 bei einer Viskositaet von 43,1 Cst beo 54°C. Geringfuegige Abweichungen von den Katalogerten sond moeglich.

Datos tecnicos obtenidos con aceite 10W40 de 200 SUS de viscosidad a 54°C (130°F). Los datos proporcionados son valores tipcos. Los valores exactos reales podrian tener una pequena variacion entre distintos motores.

WARNING
This product can expose you to chemicals including lead and DEHP, which are known to the State of California to cause cancer, and birth defects or other reproductive harm. For more information go to www.p65warnings.ca.gov

Tel: +45 63 12 83 00 | Email: ps@hymatik.com | www.hymatik.com | Hvidkaervej 27a, DK-5250 Odense SV, Denmark

TK 0630

38.4 cu in / rev

PRESSURE (PSID)

Flow (GPM)	500	1000	1500	2000	2500	3000	3250
1	2319 **4**	4638 **2**	6993 **2**	9395 **1**			
2	2431 **10**	4839 **8**	7230 **7**	9636 **6**	11969 **5**	13330 **4**	13946 **3**
4	2492 **22**	4992 **19**	7446 **17**	9896 **15**	12235 **14**	13800 **13**	14516 **11**
8	2475 **45**	5116 **42**	7670 **39**	10180 **36**	12504 **33**	14216 **31**	15003 **29**
12	2323 **69**	5027 **66**	7694 **62**	10275 **57**	12614 **53**	14253 **50**	15147 **46**
16	2106 **94**	4850 **90**	7572 **85**	10229 **79**	12659 **74**	14290 **70**	15187 **65**
20	1885 **118**	4638 **114**	7390 **109**	10092 **102**	12609 **97**	14313 **91**	15095 **85**
25	1455 **147**	4261 **143**	7110 **136**	9946 **129**	12528 **119**	14268 **111**	15068 **104**
30	969 **177**	3737 **175**	6596 **168**	9451 **161**	12111 **152**	14113 **142**	15044 **133**
32	751 **189**	3508 **187**	6330 **181**	9201 **174**	11909 **165**	14028 **154**	15018 **144**
40	121 **237**	2592 **235**	5266 **233**	8201 **226**	11101 **217**	13504 **205**	14912 **191**

TORQUE (LB IN) 13504
SPEED (RPM) 205

■ Cont. □ Int.

Intermittent operation rating applies to 10% of every minute.

Fonctionnement interm. 10% max. de chaque minute d'utilisation.

Performance data based on testing using 10W40 oil with a viscosity of 200 SUS at 54° C (130° F.) Performance data is typical. Actual data may vary slightly from one production motor to another.

Les donnees sur les performances sont basees sur des tests utilisant de l'huile 10W40 d'une viscosite de 200 SUS a 54°C (130°F). Ces donnees correspondent a des situations typiques. Les donnees reelles peuvent varier legerement d'un moteur de production a l'autre.

Intermittierende Werte maximal 10% von jeder Betriebsminute.

Capacidad de funcionamiento intermitente valida para 10% por cada minuto.

Leistugsdaten sind gemessen mit SAE 10W40 bei einer Viskositaet von 43,1 Cst beo 54°C. Geringfuegige Abweichungen von den Katalogerten sond moeglich.

Datos tecnicos obtenidos con aceite 10W40 de 200 SUS de viscosidad a 54°C (130°F). Los datos proporcionados son valores tipcos. Los valores exactos reales podrian tener una pequena variacion entre distintos motores.

WARNING
This product can expose you to chemicals including lead and DEHP, which are known to the State of California to cause cancer, and birth defects or other reproductive harm. For more information go to www.p65warnings.ca.gov

Tel: +45 63 12 83 00 | Email: ps@hymatik.com | www.hymatik.com | Hvidkaervej 27a, DK-5250 Odense SV, Denmark

TK 0800

48.8 cu in / rev

PRESSURE (PSID)

Flow (GPM)	500	1000	1500	2000	2500	2750	3000
1	3144 **4**	6368 **4**	9714 **3**	13131 **3**	16586 **3**	18303 **3**	20020 **3**
2	3254 **9**	6589 **8**	9957 **8**	13355 **7**	16783 **7**	18511 **7**	20239 **7**
4	3313 **18**	6721 **17**	10131 **17**	13531 **16**	16926 **15**	18632 **15**	20338 **15**
8	3267 **37**	6707 **36**	10146 **35**	13561 **33**	16961 **32**	18661 **32**	20360 **31**
12	3105 **55**	6564 **54**	10011 **53**	13436 **51**	16832 **49**	18512 **48**	20191 **47**
16	2817 **74**	6316 **73**	9812 **71**	13263 **68**	16678 **66**	18380 **65**	20082 **64**
20	2530 **93**	6046 **91**	9530 **89**	12963 **86**	16392 **84**	18099 **83**	19806 **81**
24	2153 **112**	5637 **109**	9156 **107**	12636 **104**	16060 **101**	17758 **100**	19456 **99**
28	1741 **130**	5226 **128**	8766 **125**	12213 **122**	15621 **119**	17339 **118**	19057 **116**
32	1302 **149**	4774 **147**	8267 **144**	11748 **140**	15196 **137**	16885 **136**	18574 **134**
35	941 **162**	4411 **161**	7913 **158**	11363 **154**	14816 **151**	16511 **149**	18206 **147**
40	349 **186**	3765 **184**	7231 **181**	10684 **177**	14141 **174**	15842 **172**	17543 **170**
45	244 **209**	3134 **208**	6585 **205**	10019 **201**	13462 **197**	15149 **195**	16835 **193**
50	0 **234**	2287 **232**	5748 **228**	9207 **224**	12688 **219**	14407 **218**	16125 **216**
55		1441 **256**	4326 **252**	8356 **247**	12212 **242**	13713 **241**	15213 **239**
60			2904 **276**	7505 **270**	10677 **265**	12489 **264**	14301 **262**

TORQUE (LB IN) 17543
SPEED (RPM) 170

☒ Cont. ☐ Int.

Intermittent operation rating applies to 10% of every minute.

Fonctionnement interm. 10% max. de chaque minute d'utilisation.

Performance data based on testing using 10W40 oil with a viscosity of 200 SUS at 54° C (130° F.) Performance data is typical. Actual data may vary slightly from one production motor to another.

Les donnees sur les performances sont basees sur des tests utilisant de l'huile 10W40 d'une viscosite de 200 SUS a 54°C (130°F). Ces donnees correspondent a des situations typiques. Les donnees reelles peuvent varier legerement d'un moteur de production a l'autre.

Intermittierende Werte maximal 10% von jeder Betriebsminute.

Capacidad de funcionamiento intermitente valida para 10% por cada minuto.

Leistugsdaten sind gemessen mit SAE 10W40 bei einer Viskositaet von 43,1 Cst beo 54°C. Geringfuegige Abweichungen von den Katalogerten sond moeglich.

Datos tecnicos obtenidos con aceite 10W40 de 200 SUS de viscosidad a 54°C (130°F). Los datos proporcionados son valores tipcos. Los valores exactos reales podrian tener una pequena variacion entre distintos motores.

WARNING
This product can expose you to chemicals including lead and DEHP, which are known to the State of California to cause cancer, and birth defects or other reproductive harm. For more information go to www.p65warnings.ca.gov

Tel: +45 63 12 83 00 | Email: ps@hymatik.com | www.hymatik.com | Hvidkaervej 27a, DK-5250 Odense SV, Denmark

TK 1000

61.0 cu in / rev

PRESSURE (PSID)

Flow (GPM)	500	1000	1500	2000	2500	2750
1	3839 **3**	7926 **2**	12129 **1**	16431 **1**	20758 **1**	23100 **1**
2	4049 **7**	8269 **6**	12522 **5**	16814 **4**	21124 **4**	23195 **4**
4	4122 **14**	8406 **13**	12692 **12**	16997 **11**	21317 **11**	23477 **11**
8	4040 **29**	8378 **28**	12711 **26**	17031 **25**	21366 **23**	23546 **23**
12	3846 **44**	8215 **42**	12581 **41**	16899 **39**	21173 **37**	23312 **36**
16	3519 **59**	7958 **57**	12362 **55**	16690 **53**	20955 **50**	23083 **50**
20	3168 **74**	7615 **72**	12006 **70**	16369 **67**	20683 **64**	22750 **63**
24	2705 **89**	7132 **87**	11594 **85**	15965 **82**	20245 **78**	22358 **77**
28	2173 **104**	6629 **102**	11088 **100**	15457 **96**	19776 **93**	21883 **92**
32	1627 **119**	6008 **117**	10463 **114**	14911 **111**	19230 **107**	21354 **105**
35	1170 **130**	5568 **129**	9988 **126**	14376 **123**	18768 **119**	20921 **117**
40	399 **149**	4732 **148**	9133 **145**	13544 **142**	17944 **138**	20093 **136**
45	0 **169**	3802 **167**	8071 **164**	12397 **161**	16791 **157**	18963 **155**
50	0 **187**	2733 **186**	6958 **183**	11168 **179**	15338 **175**	17376 **174**
55		1502 **205**	5845 **202**	9939 **198**	13985 **194**	15973 **191**
60			4732 **218**	8710 **215**	12632 **213**	14202 **211**

TORQUE (LB IN) 20093
SPEED (RPM) 136

☐ Cont. ☐ Int.

Intermittent operation rating applies to 10% of every minute.

Fonctionnement interm. 10% max. de chaque minute d'utilisation.

Performance data based on testing using 10W40 oil with a viscosity of 200 SUS at 54° C (130° F.) Performance data is typical. Actual data may vary slightly from one production motor to another.

Les donnees sur les performances sont basees sur des tests utilisant de l'huile 10W40 d'une viscosite de 200 SUS a 54°C (130°F). Ces donnees correspondent a des situations typiques. Les donnees reelles peuvent varier legerement d'un moteur de production a l'autre.

Intermittierende Werte maximal 10% von jeder Betriebsminute.

Capacidad de funcionamiento intermitente valida para 10% por cada minuto.

Leistugsdaten sind gemessen mit SAE 10W40 bei einer Viskositaet von 43,1 Cst beo 54°C. Geringfuegige Abweichungen von den Katalogerten sond moeglich.

Datos tecnicos obtenidos con aceite 10W40 de 200 SUS de viscosidad a 54°C (130°F). Los datos proporcionados son valores tipcos. Los valores exactos reales podrian tener una pequena variacion entre distintos motores.

WARNING
This product can expose you to chemicals including lead and DEHP, which are known to the State of California to cause cancer, and birth defects or other reproductive harm. For more information go to www.p65warnings.ca.gov

Tel: +45 63 12 83 00 | Email: ps@hymatik.com | www.hymatik.com | Hvidkaervej 27a, DK-5250 Odense SV, Denmark

Flange Mount / Standardgehäuse
Monture à bride(s) / Montaje de brida

Side Load - N (lbs)

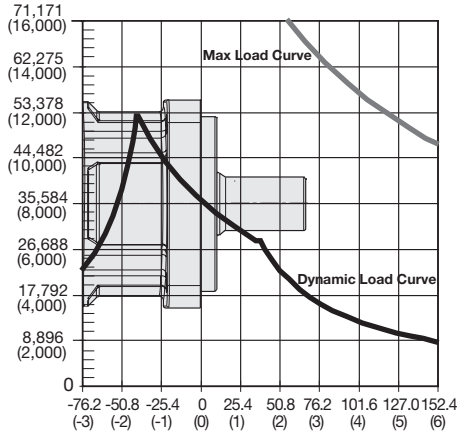

Distance from Mounting Face - mm (in)
Motor Image Not To Scale

The dynamic side load curve is based on uni-directional steady state loads for L_{10} bearing life at 12 x 10^6 @ 100 RPM revolutions.
Die zulaessige auslegbare radiale Wellenbelastungskurve ist unter ruhenden, einseitig statisch gerichteten Lastverhaltnissen auf eine L_{10} Lebensdauer mit 12 x 10^6 Umdrehungen kalkuliert bei 100 min.
La courbe de charge laterale permise se base sur des charges unidirectionnelles en regime permanent pour le roulement L_{10} a 12 x 10^6 @ 100 RPM revolutions.
La curva de valores admisibles de carga lateral esta basada en cargas contantes para cojinetes L_{10} a 12 x 10^6 revoluciones @ 100 RPM.

Wheel Mount / Radnabengehäuse
Monture à roue / Montaje de rueda

Side Load - N (lbs)

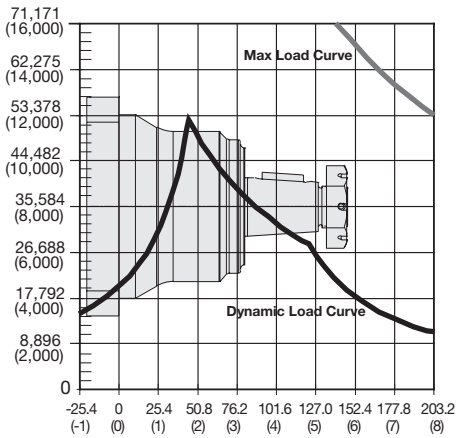

Distance from Mounting Face - mm (in)
Motor Image Not To Scale

The maximum load curve is defined by bearing static load capacity. This curve should not be exceeded at any time including shock loads.
Die maximale radiale Wellenbelastungskurve ist definiert als maximale statische Last ohne Drehzahl. Sie gilt als Grenze und sollte keinesfalls überschritten werden.
La courbe de charge maximale est définie par la capacité de charge statique portante. Cette courbe ne devrait être dépassée en aucun moment y compris pour les charges par à-coups.
La curva de carga máxima queda definida por la capacidad de carga estática del cojinete. No se deben superar los valores de esta curva, ni siquiera con cargas provisorias de impacto.

Equation to Calculate the Expected Radial Bearing Life
Gleichung zur Ermittlung der Lagerlebensdauer

Equation to calculate the dynamic bearing life for a given load:
Bestimmung der erlaubten radialen Wellenbelastung mit vorgegebener Last

Use F_a, F_b and S in equation to determine hours of L_{10} bearing life.
Die Lebensdauer in Stunden ergibt sich durch einsetzen von F_a, F_b und S in die nachstehende Formel.

$$L = \frac{12 \times 10^6}{60 \times S} \left\{\frac{F_a}{F_b}\right\}^{3.33}$$

Where / Mit:

S = Shaft Speed RPM / Abtriebswellendrehzahl in min^{-1}
L = Life In Hours / Lebensdauer in Stunden
F_a = Allowable side load defined by above curve at a distance from mounting flange. / Erlaubte radiale Wellenbelastung als Function der Laenge
F_b = Application side load. / Anwendungsseitige Wellenbelastung

Note: Calculations are based on L_{10} bearing life per ISO 281.
Auslegung basiert auf einer L_{10} Lenbendauer nach ISO 281.

WARNING
This product can expose you to chemicals including lead and DEHP, which are known to the State of California to cause cancer, and birth defects or other reproductive harm. For more information go to www.p65warnings.ca.gov

Tel: +45 63 12 83 00 | Email: ps@hymatik.com | www.hymatik.com | Hvidkaervej 27a, DK-5250 Odense SV, Denmark

Code: K5

Standard SAE CC, 1 5/16-12 SAE Rear Radial

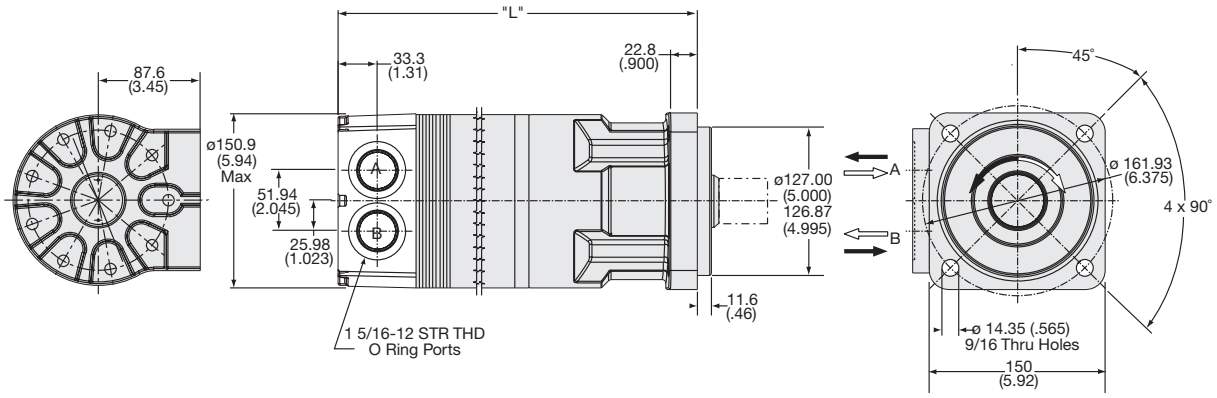

Code K5 disp.		0250	0315	0400	0500	0630	0800	1000
Weight/Gewichtkg	**kg**	**32.0**	**32.7**	**33.5**	**34.5**	**35.7**	**37.2**	**39.1**
Poids/Peso	(lb)	(70.6)	(72.0)	(73.8)	(76.0)	(78.8)	(82.1)	(86.3)
Length	**"L" mm**	**276.9**	**281.9**	**289.6**	**297.2**	**309.9**	**322.6**	**340.4**
	"L" (in)	(10.9)	(11.1)	(11.4)	(11.7)	(12.2)	(12.7)	(13.4)

Code: T5

Wheel Mount, 1 5/16-12 SAE Rear Radial

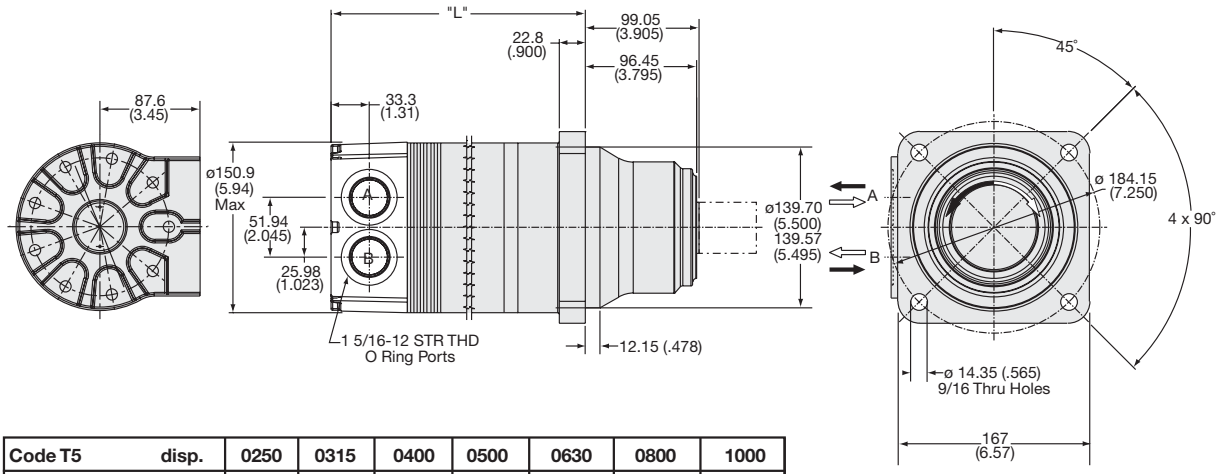

Code T5 disp.		0250	0315	0400	0500	0630	0800	1000
Weight/Gewicht	**kg**	**30.8**	**31.4**	**32.3**	**33.2**	**34.5**	**36.0**	**37.9**
Poids/Peso	(lb)	(67.9)	(69.3)	(71.1)	(73.3)	(76.1)	(79.4)	(83.5)
Length	**"L" mm**	**190.5**	**195.6**	**203.2**	**213.4**	**223.5**	**238.8**	**256.5**
	"L" (in)	(7.5)	(7.7)	(8.0)	(8.4)	(8.8)	(9.4)	(10.1)

English equivalents for metric specifications are shown in ( ).

WARNING
This product can expose you to chemicals including lead and DEHP, which are known to the State of California to cause cancer, and birth defects or other reproductive harm. For more information go to www.p65warnings.ca.gov

Tel: +45 63 12 83 00 | Email: ps@hymatik.com | www.hymatik.com | Hvidkaervej 27a, DK-5250 Odense SV, Denmark

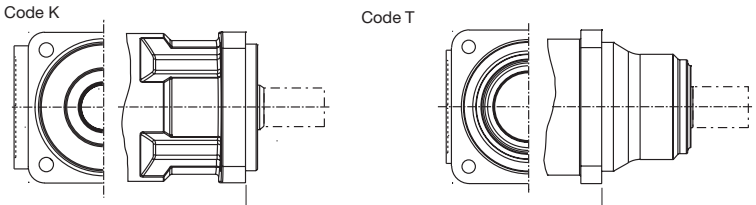

Code: 32

1 1/2” Keyed



Code: 36

1 1/2” 17 Tooth
12/24 Spline



Code: 63

1 3/4” Tapered



Code: 64

40mm Keyed

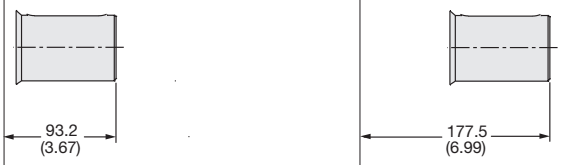

English equivalents for metric specifications are shown in ( ).

WARNING
This product can expose you to chemicals including lead and DEHP, which are known to the State of California to cause cancer, and birth defects or other reproductive harm. For more information go to www.p65warnings.ca.gov

Parker Hannifin Corporation
Pump & Motor Division
Greeneville, Tennessee, USA

Tel: +45 63 12 83 00 | Email: ps@hymatik.com | www.hymatik.com | Hvidkaervej 27a, DK-5250 Odense SV, Denmark

Code: 32

1 1/2" Keyed

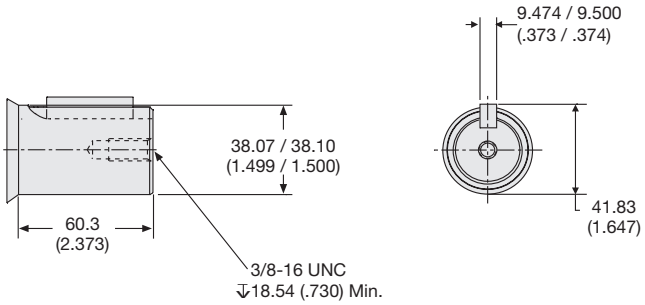

Code: 36

1 1/2" 17 Tooth
12/24 Spline

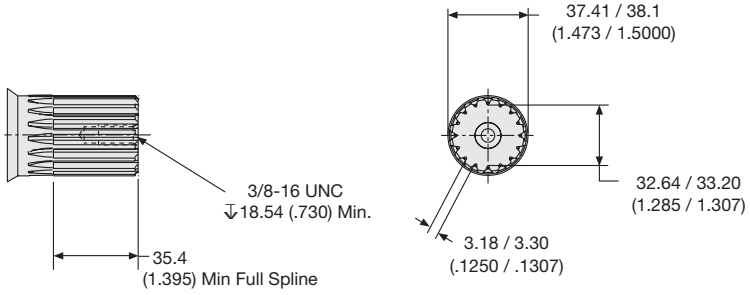

Code: 63

1 3/4" Tapered

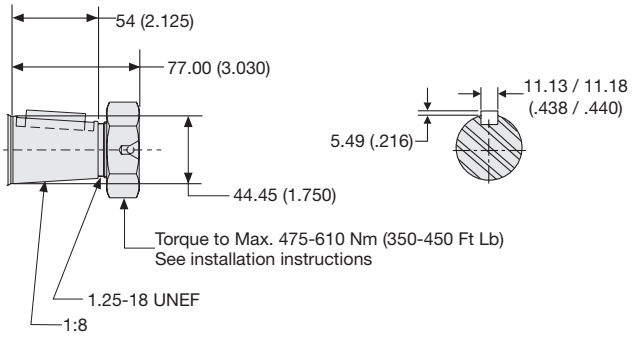

Code: 64

40mm Keyed

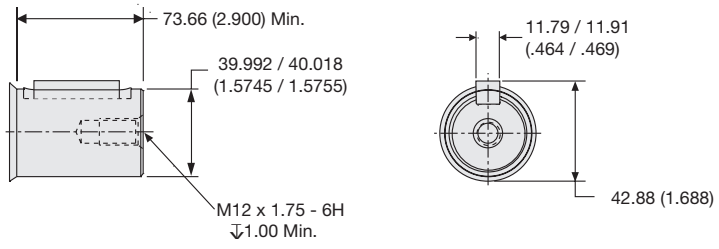

English equivalents for metric specifications are shown in ( ).

WARNING
This product can expose you to chemicals including lead and DEHP, which are known to the State of California to cause cancer, and birth defects or other reproductive harm. For more information go to www.p65warnings.ca.gov

Tel: +45 63 12 83 00 | Email: ps@hymatik.com | www.hymatik.com | Hvidkaervej 27a, DK-5250 Odense SV, Denmark

Availability		Code		
TK	TGK	Painted	Unpainted	Description
x	x	AAAA	AAAB	Black Paint
x	x	AAAC	-	Double Paint
x[22]	x[15]	AAAF	AABP	Castle Nut
x	x	AAAG	AAAH	Fluorocarbon Seals
x	x	AAAJ	AAFG	High Temperature Commutator Seal
	x	AABJ	AABK	Free Running Rotorset
	x[10]	AAAT	AAFX	Hot Oil Shuttle (11:00)
	x[10,15]	AAAU	AAGF	Bi-directional Shuttle (11:00*), Castle Nut
	x	AABL	AABM	Free Running Rotor Set & No Commutator Seal
x	x	AABT	-	No Nut
x	x	AACP	-	Free Running Rotor Set, Castle Nut
x	x	-	AADJ	High Temperature Commutator Seal, Castle Nut
x	x	AAFW	AAFA	Fluorocarbon (Viton) Seals, High Temperature Commutator Seal
x[22]	x[20]	AANG	AADD	Fluorocarbon seals, High Temperature Commutator Seals, Castle Nut
	x[10]	-	AAFX	Bidirectional shuttle (11:00*)
x	x	AAHU	-	High Temperature Commutator Seal, No Nut
x	x	-	AAJL	No Nut
x	x	AALF	-	No Commutator Seal
	x[10]	BBBA	BBBM	69 Bar (1000 PSI) Internal Bidirectional Relief
	x[10]	BBBG	BBBJ	103 Bar (1500 PSI) nternal Bidirectional Relief
	x[10]	BBBB	-	138 Bar (2000 PSI) Internal Bidirectional Relief
	x[10,21]	BBBC	BBBF	207 Bar (3000 PSI) Internal Bidirectional Relief
	x[10,18]	BBBD	BBBW	276 Bar (4000 PSI) Internal Bidirectional Relief
	x[10,21]	-	BBCG	2500 PSI Int Bidirectional Relief
	x	FSAA	FSAB	Speed Sensor
	x	-	AAUY	Complete Motor Nickel Plated, 40 um, Except Shaft
Consult factory for other positions and combinations.				

[10] Not available with ports code A, B or E (If specifying internal bidirectional reliefs, relief settings cannot exceed intermittent pressure rating of motor.)
[15] Available only with shaft codes 08 and 19
[18] Not available with displacements 0530, 0625, 0785 or 0960
[20] Only available with shaft codes 08, 19 and 31
[21] Not available with displacements 0785 or 0960
[22] Only available with TK shaft code 63

WARNING
This product can expose you to chemicals including lead and DEHP, which are known to the State of California to cause cancer, and birth defects or other reproductive harm. For more information go to www.p65warnings.ca.gov

Tel: +45 63 12 83 00 | Email: ps@hymatik.com | www.hymatik.com | Hvidkaervej 27a, DK-5250 Odense SV, Denmark

Code: AAAC US

Double Paint — Base coat of red oxide primer and finish coat of black paint for increased corrosion resistance.

Code: AAAF* or AABP EU US

Castle Nut — All motors ordered with Tapered shafts are equipped with patch locking nuts. If desired, a castle nut may be specified.

Code: AAAJ* or AAFG EU US

High Temperature Commutator Seal — Under conditions of high temperature, it is suggested that a high temperature commutator seal be used.

Code: AAAG* or AAAH EU US

Fluorocarbon — is available under various registered trademarks, including VITON™ (a registered trademark of DuPont), FLUOREL™ (a registered trademark of 3M) or FPM™ (a registered trademark of DuPont).

Code: AABJ* or AABK EU US

Free Running Rotorset — The “free running rotorset” is a specially dimensioned rotorset that allows for smoother operation at low flows and low pressure. Volumetric efficiency can be affected.

Code: AANM* EU US

Seal Saver — Seal saver is a metal disc that presses onto the motor shaft, covering the dirt and water (D&W) seal. It’s purpose is to aid in preventing external contamination from damaging the D&W seal.

Code: AAAC

Zweischichtlackierung schwarz

Code AAAF* or AABP

Kronenmutter
Selbstsichernde Mutter wird ersetzt durch Kronenmutter

Code: AAAJ* or AAFG

Kommutatordichtung fuer hohe Temperaturen
— Bei hohen Temperaturen des Hydraulikoels wird empfohlen die Kommutatordichtung fuer hohe Temperaturen einzusetzten!

Code: AAAG* or AAAH

Fluorocarbon Dichtungen
Für Anwendungen im höheren/niedrigeren Tenperaturenbereich oder speziellen Flüssigkeiten wird der Einsatz von Fluorcarbon Dichtungen empfohlen. Fluorocarbon ist bekannt unter verschiedenen eingetragenen Warenzeichen
VITON™ - DuPont, Fluorel™ - 3M, FPM™ - DuPont

Code: AABJ* or AABK

Leichtläufer Rotorsatz
Anlaufdruck < 5 bar

Code: AANM*

Versiegelungsschutz — Der Versiegelungsschutz besteht aus einer Metallscheibe, die gegen die Antriebswelle druckt und damit Schmutz- und Wasserdichtung (D&W-Dichtung) abdeckt. Hierdurch soll einer Beschadigung der D&W-Dichtung auf Grund externer Verunreinigungen vorgebeugt werden.

* Option code shown is with a single black coat of paint.
* Motor schwarz grundiert

Code: FSAA* or FSAB EU US

An Economical Sensor for Speed Readout

This rugged, weather resistant design is ideal for industrial and mobile applications. Applications include salt/sand/fertilizer spreader drives, conveyer drives and injection molder compression drives. The sensor is a hall-effect type, which when externally powered outputs 30 square wave digital pulses per coupling shaft revolution. The connector is a user friendly universally available 4 pin polarized M12 connector allowing for simplified field service. The integrated design does not effect the side load capacity or performance of the torque motor.

Dieser robuste, wetterfeste Drehzahlaufnehmer arbeitet nach dem Halleffekt. Es werden 30 Rechteckimpulse pro Abtriebswellenumdrehung erzeugt. Durch Erfassung der positiven und negativen Wellenflanken sind 60 Impulse pro Umdrehung möglich. Der Sensor führt zu keiner Leistungsbeschränkung des Motors. Die volle Radiallastkapazität bleibt erhalten.

Un capteur economique pour mesure de la vitesse. Ce capteur robuste et resistant aux intemperies est a effet Hall. Alimente par une source externe, il fournit 30 ondes digitales carrees par tour. Par multiplication lelectronique on obient 60 pulsations par tour. Son montage ne modifie pas le couple ni la charge radiale du moteur qui le recoit.

Este es un diseño de construcción reforzada, apto para uso a la intemperie e ideal para uso industrial y en equipos móviles. Entre sus aplicaciones, se puede mencionar esparcidores de sal, arena o fertilizantes, unidades motoras de transportadores y unidades motoras de compresión para moldeo a inyección. El sensor es del tipo de medio efecto, que al ser excitado externamente, genera 30 pulsos digitales de onda cuadrada por cada revolución del eje del acoplamiento. Utiliza un simple conector M12 polarizado tetrapolar, que es de uso común y facilita el mantenimiento en el lugar de instalación. El diseño integrado no afecta la capacidad de carga lateral ni la potencia del motor de torque.

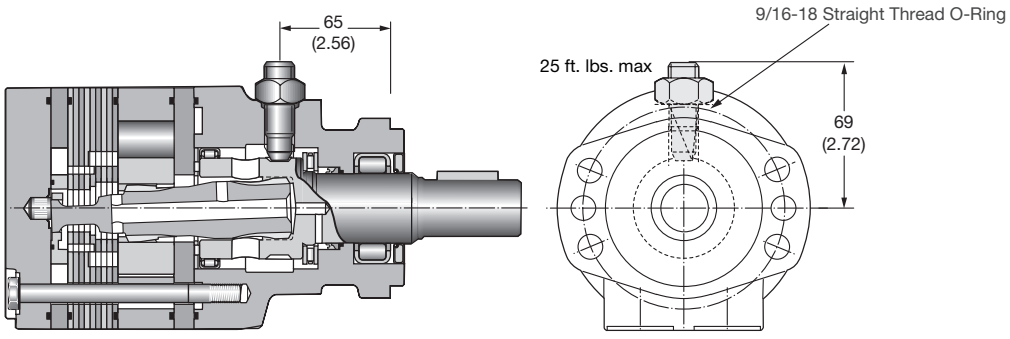

English equivalents for metric specifications are shown in ( ).

WARNING
This product can expose you to chemicals including lead and DEHP, which are known to the State of California to cause cancer, and birth defects or other reproductive harm. For more information go to www.p65warnings.ca.gov

Tel: +45 63 12 83 00 | Email: ps@hymatik.com | www.hymatik.com | Hvidkaervej 27a, DK-5250 Odense SV, Denmark

Speed Sensor / Drehzahl-Sensor
Compte-tours / Contagiri

LSHT Torqmotors™ and Nichols™ Motors
Heavy Duty Motors
HY13-1590-011/US,EU

Operating voltage range **Versorgungsspannung** **Gamme de tension de service** **Gama de voltaje de alimentacion**	4.5...24 VDC
Operating temperature **Arbeitstemperatur** **Temperature de service** **Temperatura de servicio**	-20° to 220° F -29°...104° C
Operating frequency range **Arbeitsfrequenz** **Gamme de frequences de service** **Gama de frecuencia de servicio**	0...10 KHZ
Max sink current **Erforderlicher Laststrom** **Courant d'affaissement maxi** **Corriente maxima de alimentacion**	0 ... 20 mA (max.)
Connection **Anschluß** **Branchement** **Conexion**	4 Pin Polarized (12mm)
Sensor output **Sonsorausgang** **Sortie du détecteur** **Salida del sensor**	30 Pulses per revolution which can be doubled electronically 30 impulsions par revolution pouvant etre doublees electroniquement 30 pulsos por revlucion, que pueden duplicarse electronicamente
Output is NPN **Ausgang is NPN** **La sortie est NPN** **La salida es NPN**	Open Collector Collecteur ouvert Colector abierto

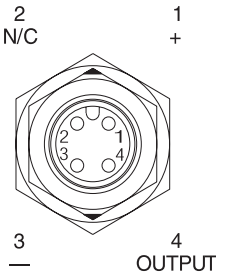

4 Pin Polarized
M12 Connector (Male)

Cable and "Pull Up" Resistor are *not* supplied by factory.

Zubehör wie z.B. Kabel gehören nicht zum Lieferumfang.

Le câble et la résistance "Pull Up" ne sont pas fournis par l'usine.

El cable y la resistencia de arranque no se suministran originalmente de fábrica.

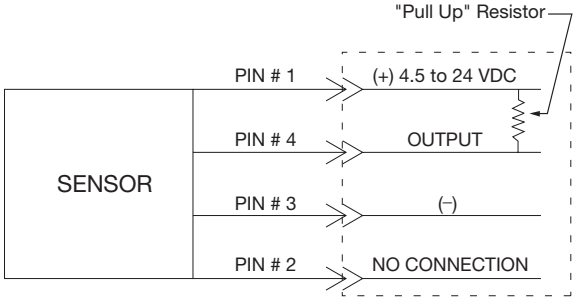

Pull-up Resistor Value Formula
Formel zur Ermittlung des Pull up-Widerstandes
Formule de la valeur de resistance "Pull-up"
Calculo de la resisancia de carga

(0.25 Watt, 5% de tol.)
(0.25 Watt, Tol. 5%)
(0.25 Watt 5% Tol.)
(0.25 Watt, toll. 5%)

$$\frac{\text{Voltage / Spannung / Curant d'affaisement / Voltaje } 4.5...24\text{ VDC}}{\text{Sink Current / Laststrom Resistance / Corriente de ali mentacion } 0...20\text{ mA}} = \text{Resistor / Widerstand / Resistance / Resistancia (k Ohm)}$$

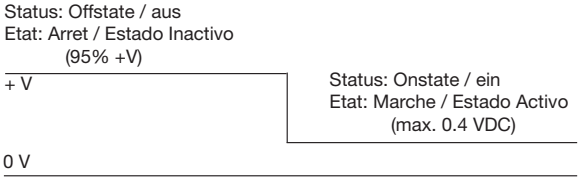

WARNING
This product can expose you to chemicals including lead and DEHP, which are known to the State of California to cause cancer, and birth defects or other reproductive harm. For more information go to www.p65warnings.ca.gov

Parker Hannifin Corporation
Pump & Motor Division
Greeneville, Tennessee, USA

Tel: +45 63 12 83 00 | Email: ps@hymatik.com | www.hymatik.com | Hvidkaervej 27a, DK-5250 Odense SV, Denmark

Code: AAFX or AAAT* EU US

A Hot Oil Shuttle is used to continuously remove a portion of the fluid in a closed loop transmission or other closed loop system. At 125 PSI pressure differential between the motor return port and the shuttle outlet,1.5 GPM* will exit the circuit to cool, filter and return to the reservoir. The constant loop replenishment helps to keep heat and contamination from building up in the circuit. This option is not available with rear ports or integral cross over relief.

Spülventil für geschlossene Systeme zur Rückführung einer definierten Menge des Niederdrucköls in den Tank zur Abkühlung innerhalb desselben Kreislaufs.

Valve de rincage pour systèmes fermès pour le retour d`un volume dèterminè de fluide basse pression vers le rèservoir, un refroidisseur ou un filtre de rèfrigèration, dans le même circuit.

Un transferidor de aceite caliente actúa permanentemente para extraer una parte del fluido en una transmisión de circuito cerrado u otro sistema de circuito cerrado. Entre la entrada de retorno del motor y la salida del transferidor hay una diferencia de presión de 125 psi (libras/pulg.^{2}), y a esta presión salen 1,5 galones por minuto del circuito para enfriarse, filtrarse y volver al depósito de fluido. El reacondicionamiento permanente de parte del fluido evita la contaminación del mismo y el incremento de temperatura en el circuito.

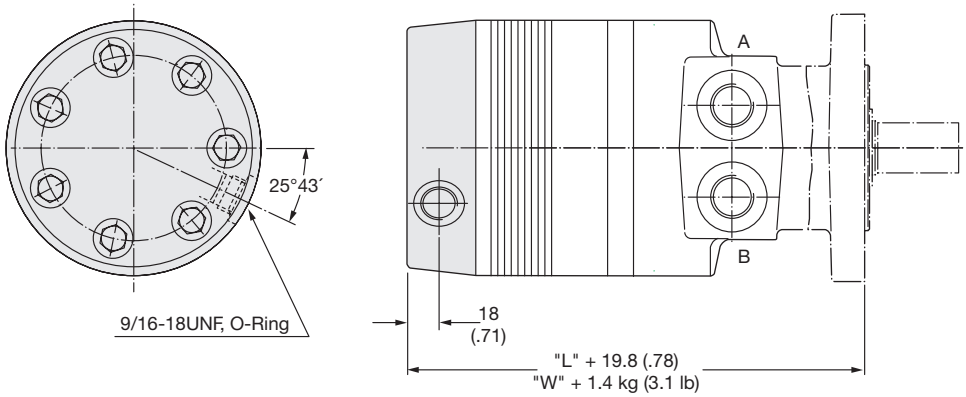

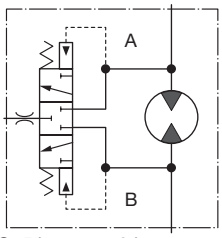

Q=5 l (Q=1.32 gal) p=9 bar (p=131 psi) ϑ=39 cSt (ϑ=190 SUS)

Standard Length & Weights for TF Series on Pages 131-136, TG Series on Pages 185-189 and TH Series on Pages 227-228.
Längen/Gewichte TF Serie Seiten 131-136, TG Serie Seiten 185-189, TH Serie Seiten 227-228.
Longueurs et poids courants pour la série TF, voir les pages 131-136, et la série TG, voir les pages 185-189, et la série TH, voir les pages 227-228.
Los valores estándar de longitud y peso de la Serie TF se puede ver en las Páginas 131-136, y de la Serie TG en las Páginas 185-189, y de la Serie TH en las Páginas 227-228.

English equivalents for metric specifications are shown in ( ).

WARNING
This product can expose you to chemicals including lead and DEHP, which are known to the State of California to cause cancer, and birth defects or other reproductive harm. For more information go to www.p65warnings.ca.gov

Tel: +45 63 12 83 00 | Email: ps@hymatik.com | www.hymatik.com | Hvidkaervej 27a, DK-5250 Odense SV, Denmark

Internal relief valve / Schockventil intern
Soupape de sécurité interne /
Regolatrice di pressione interna

LSHT Torqmotors™ and Nichols™ Motors
Heavy Duty Motors
HY13-1590-011/US,EU

Code: BBBA*, BBBB*, BBBC*, BBBD* or BBBG* EU US

This integrated internal relief valve is used for fixed pressure settings.

Internes Schockventil
La soupape de sécurité interne utilise pour des valeurs de pression fixes.
La valvula interna de alivio se utiliza para cablibraciones fijas de presion.

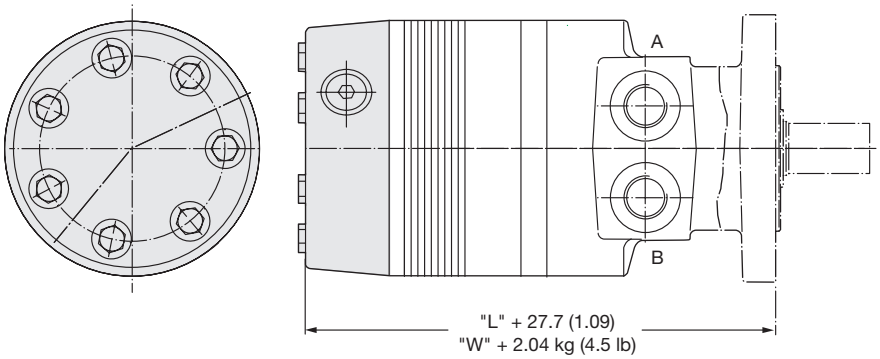

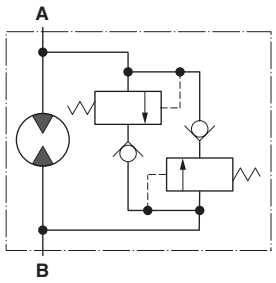

Bestellschlüssel / Systéme de Commande / Ordering system / Informacion para pedidos

Option		Pressure bar (psi)
BBBA	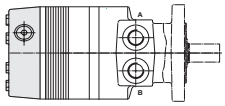 **Öffnungsdruck Opening pressure Tarage Presion de apertura**	69 (1000)
BBBB		138 (2000)
BBBC		207 (3000)
BBBD		276 (4000)
BBBG		103 (1500)

Standard Length & Weights for TF Series on Pages 131-136, TG Series on Pages 185-189 and TH Series on Pages 227-228.
Längen/Gewichte TF Serie Seiten 131-136, TG Serie Seiten 185-189, TH Serie Seiten 227-228.
Longueurs et poids courants pour la série TF, voir les pages 131-136, et la série TG, voir les pages 185-189, et la série TH, voir les pages 227-228.
Los valores estándar de longitud y peso de la Serie TF se puede ver en las Páginas 131-136, y de la Serie TG en las Páginas 185-189, y de la Serie TH en las Páginas 227-228.

English equivalents for metric specifications are shown in ( ).

WARNING
This product can expose you to chemicals including lead and DEHP, which are known to the State of California to cause cancer, and birth defects or other reproductive harm. For more information go to www.p65warnings.ca.gov

Tel: +45 63 12 83 00 | Email: ps@hymatik.com | www.hymatik.com | Hvidkaervej 27a, DK-5250 Odense SV, Denmark

Fluid

To insure maximum motor performance and life, use a premium grade hydraulic or engine oil. Fluids with a minimum of .125% zinc (or equivalent) anti-wear package should be used. A mineral or synthetic based 10W40 engine oil or hydraulic (200 SUS) is recommended. Torqmotor™ seals come standard in nitrile rubber. If a fluid that is not compatible with nitrile is to be used, a fluoroelastomer seal material can be specified.

- Minimum fluid viscosity is 50 SUS
- Recommended fluid operating temperature is -28° C to 93° C (-20°F to 200° F)
- Filtration level is 20-50 micron nominal

Pressure

Operating the motor in its intermittent pressure range will shorten the life of the motor and should generally be restricted to 10% or less per minute. The reduced life resulting from continuous operation in the intermittent range may be acceptable in some applications. Consult the factory for details.

Shaft Loading

The use of 1 inch and 25mm diameter shafts are not recommended when torque loads exceed 3500 lb-in. 316 stainless shafts should be limited to 2000 lb-in. For 7/8 inch diameter shafts, torque should be limited to 1250 lb-in. Corrosion resistant Nitrotec shafts have reduced torque-carrying capability. Consult factory for values for specific shafts. The maximum thrust load on all shafts should not exceed 1000 lbs inward or outward.

Performance Data

Performance data shown in this catalog is the result of testing performed using 10W40 oil at 54°C (130°F), 200 SUS. Actual performance will vary with fluid conditions. Lower viscosity will produce lower performance.

Inlet Conditions

Positive pressure *must* be available at the motor inlet while it is rotating. If an overrunning load causes the motor to rotate faster than the pump can fill it, cavitation will occur. Consult the factory for inlet pressure requirements and speed limitations.

Other Operating Conditions

Consult factory before operating at conditions exceeding any ratings or recommendations in this catalog.

Installation Recommendations

- To avoid contamination do not remove plastic port plugs until fittings are to be installed.
- Motor mounting flange must make full contact with equipment mount; do not use the mounting bolts to force the motor pilot into the pilot hole to align the motor.
- Pulleys, sprockets, wheels, or couplings should be properly aligned on the shaft to avoid excessive radial or thrust loads.
- To avoid damaging the thrust system, do not hammer on the motor or shaft to install or remove couplings, pulleys, sprockets, etc.

Tapered Shaft

The tightening torque listed for a taper shaft nut is based on strength of the shaft and nut. Hub design and hub material determine the application tightening torque. Refer to hub manufacturers specifications to determine actual assembly torque. Factory suggested assembly torques are: 200-400 lb-ft (1.25, 1.5 & 1.75 Dia. Shafts), 175-225 lb-ft (1.0 dia. shafts).

To insure a sound hub to shaft coupling, the hub must conform to the full length of the shaft taper. This will prevent bending stresses at the keyway that could cause a fatigue failure.

Castle Nut

All motors ordered with Tapered shafts are equipped with patch locking nuts. If desired, a castle nut may be specified.

Paint

Unless specified otherwise, motors are shipped unpainted and coated with a rust inhibitor. Paint options are:

* Single coat of black paint.
* Single coat of black paint plus a coat of red oxide primer. (Double paint).

WARNING
This product can expose you to chemicals including lead and DEHP, which are known to the State of California to cause cancer, and birth defects or other reproductive harm. For more information go to www.p65warnings.ca.gov

Reverse Timed Manifold

All motors in this catalog are bi-rotational. The efficiency of the motors is essentially unaffected by direction of rotation.

The direction of output shaft rotation depicted below is that which will result from pressurizing the “A” port of the motor. Pressurizing the “B” port will cause shaft rotation in the opposite direction. Direction of rotation is as seen by looking directly at the shaft.

“Front ported” motors have the ports at the shaft end of the motor. “Rear ported” motors have the ports in the end cap of the motor. Standard motors are Rotation Code “0”. Reverse timed motors are Rotation Code “1”.

Series	Standard Code “0”		Reverse Timed Code “1”	
	Front Ported	Rear Ported	Front Ported	Rear Ported
TC, TB, TE, TJ	CW	CCW	CCW	CW
TF, DF, TG, BG, DG, TH, BH	CCW	CW	CW	CCW
TK	N/A	CW	N/A	CCW
110A	CW	N/A	N/A	N/A
700, 716	CCW	N/A	N/A	N/A

⚠ WARNING
This product can expose you to chemicals including lead and DEHP, which are known to the State of California to cause cancer, and birth defects or other reproductive harm. For more information go to www.p65warnings.ca.gov

Tel: +45 63 12 83 00 | Email: ps@hymatik.com | www.hymatik.com | Hvidkaervej 27a, DK-5250 Odense SV, Denmark

CAUTION!

Static Brake Only:

The brakes on these motors are designed for static use only, i.e., the brake should not be used to stop the motor and the motor should not be started while the brake is applied. These brakes are "parking" brakes only. Using the brake in a dynamic condition (while the motor is turning) will damage and reduce the holding capacity of the brake. If the brake does not hold because it has been damaged, personal injury or property damage could result.

Brake holding capacity and periodic test:

The brake holding capacity rating is based on actual holding capacity when new. If properly used as a static brake only, the holding capacity will slowly decrease with time. Since holding capacity will slowly decrease over time, a proper maintenance procedure should include periodically testing the holding capacity of the brake. This can be achieved by running a vehicle ramp test per OEM instructions.

Brake orientation:

This wet sump, multi-disk brake is designed to be mounted with the shaft in a horizontal position. If your application will have the motor in any other orientation, the motor should be thoroughly tested for longevity of brake holding capacity. This can be achieved by running a vehicle ramp test per OEM instructions after a predetermined number of brake actuations. Under no circumstances, however, should the motor be mounted with the shaft pointing vertically upward because the disks will not be operating within the oil sump and damage to the brake disks will occur.

Holding torque/brake release pressure:

The brake release port is designed for 3000 psi maximum. Limiting the pressure in that port to below 1500 psi is recommended to enhance seal life. The minimum pressure required to fully release the brake depends upon the holding torque of the brake.

BG Series	Holding Torque	Release Pressure
Standard	**12,000 lb in**	**315 psi**
Optional	6,000 lb in	160 psi
Optional	9,000 lb in	240 psi
Optional	16,000 lb in	405 psi

BH Series	Holding Torque	Release Pressure
Standard	**16,000 lb in**	**315 psi**

Initial use, bleeding not required:

Bleeding the brake is not required. It is recommended that the brake release port be filled with approximately 1.2 oz. (36cc) system oil prior to installation or first use.

Torque for mounting bolts:

Customer installed mounting bolts should be grade 8 and torqued to a minimum of 90 ft-lbs.

Brake service intervals:

The seals, springs and brake disc package should be periodically (how often depends on your application) inspected and replaced if damaged or worn. All should be replaced at least every 250,000 brake cycles or 3 years, whichever occurs first.

WARNING
This product can expose you to chemicals including lead and DEHP, which are known to the State of California to cause cancer, and birth defects or other reproductive harm. For more information go to www.p65warnings.ca.gov

Notes

⚠ **WARNING**
This product can expose you to chemicals including lead and DEHP, which are known to the State of California to cause cancer, and birth defects or other reproductive harm. For more information go to www.p65warnings.ca.gov

Tel: +45 63 12 83 00 | Email: ps@hymatik.com | www.hymatik.com | Hvidkaervej 27a, DK-5250 Odense SV, Denmark

Technical Information /Technische Information / Segni / Informacion Tecnica

LSHT Torqmotors™ and Nichols™ Motors
110A Series / Serie / Série HY13-1590-011/US,EU

9 Displacements		(3.6 – 24.1 in³/rev)
9 Schluckvolumen		**59…395 cm³/rev**
9 Cylindrée		
9 Despazamientos		
	Cont	**Int**
Maximum Pressure	(2500 psid)	(3000 psid)
Eingangsdruck	**…172.4 bar**	**…206.8 bar**
Pression entrée		
Presion Maxima		
Maximum Oil Flow		(30 gpm)
Schluckstrom		**…113.6 lpm**
Débit d'huile		
Caudal Maximo de Aceite		
Maximum Speed		**858 rpm**
Drehzahl		
Vitesse de rotation		
Velocidad Maxima		
	Cont	**Int**
Maximum Torque	(5548 lb in)	(7247 lb in)
Max Drehmoment	**…627 Nm**	**…819 Nm**
Couple		
Torque Maximo		
Maximum Side Load at Key		(1450 lb)
Seitenlast		**… 6450 N**
Charges latèrales		
Carga Maxima Lateral		

When the Ultimate in Efficiency and Reliability is a Must

This high performance motor contains a power element that is pressure loaded against internal leakage for high volumetric efficiency. It is wear compensated, so that its volumetric efficiency will not degrade with use. It can provide up to 7247 lb-in of torque through a one-piece solid fixed axis shaft. This shaft design allows for full stationary spline contact between shaft and rotor, minimizing spline contact stresses. It also allows the shaft to be extended through the rear cover for mounting parking brakes, auxiliary drive functions or encoders for speed readout or closed loop control. Low internal pressure drop means high mechanical efficiency and higher flow capability. This rugged motor is the most compact on the market.

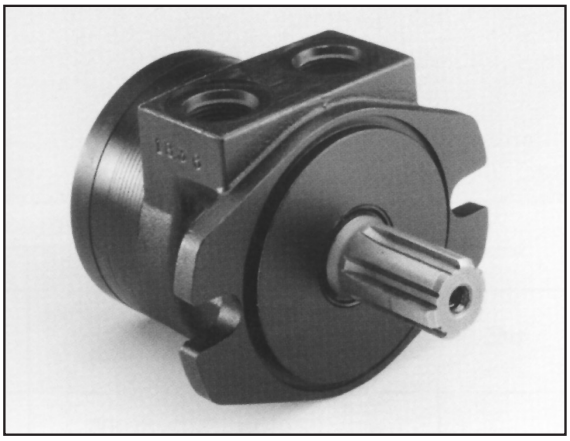

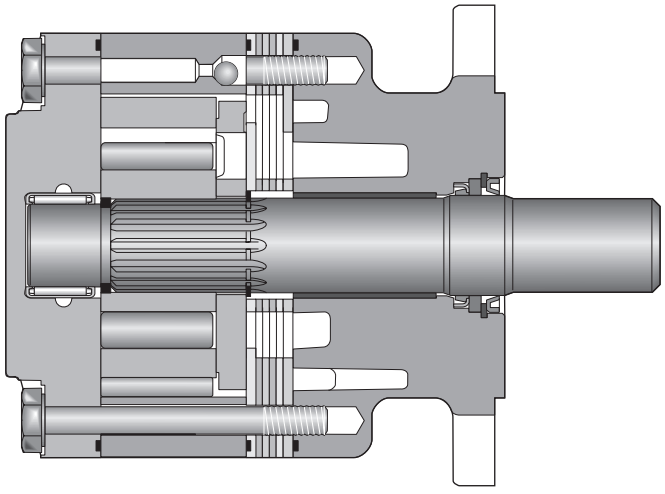

⚠ **WARNING**
This product can expose you to chemicals including lead and DEHP, which are known to the State of California to cause cancer, and birth defects or other reproductive harm. For more information go to www.p65warnings.ca.gov

Parker Hannifin Corporation
Pump & Motor Division
Greeneville, Tennessee, USA

Tel: +45 63 12 83 00 | Email: ps@hymatik.com | www.hymatik.com | Hvidkaervej 27a, DK-5250 Odense SV, Denmark

Ordering Information / Bestellschlüssel
System de Commande / Imformacion para pedidos

LSHT Torqmotors™ and Nichols™ Motors
110A Series / Serie / Série HY13-1590-011/US,EU

11 – **X** (Series) – **A** (Shaft Welle Arbre Ejes) – Engineering Design technischer Entwurf Conception technique Diseño de ingeniería – **XXX** (Displacement Schluckvolumen Cylindrée Desplazamiento) – **X** (Mounting Gehäuse Carter Montaje) – **X** (Ports Anschluß Plan de raccordement Lumbreras)

Code	
0	1" Keyed 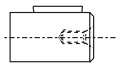
1	1" 6B Spline 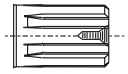
2	25mm Keyed 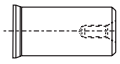
3	1-1/4" Keyed 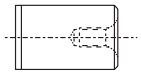
5	1-1/4"-14 Tooth Spline 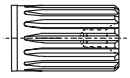
6	7/8"-13 Tooth Spline 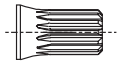

Code	cm³/U cm³/tr cm³/giro	in³/rev
036	59	3.6
054	89	5.4
071	116	7.1
088	144	8.8
106	174	10.6
129	211	12.9
164	269	16.4
189	310	18.9
241	395	24.1

Code	
A	SAE A 2-Bolt 
B	SAE B 2-Bolt 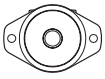
F	4 Bolt w/3/8-16 UNC 

Code	
M	5/16-18 UNC Manifold 
S	7/8-14 SAE 
P	1/2-14 NPTF 
T	1/2-14 BSPP 

Consult factory for other available options, configurations ordering codes and lead times.

⚠ **WARNING**
This product can expose you to chemicals including lead and DEHP, which are known to the State of California to cause cancer, and birth defects or other reproductive harm. For more information go to www.p65warnings.ca.gov

Tel: +45 63 12 83 00 | Email: ps@hymatik.com | www.hymatik.com | Hvidkaervej 27a, DK-5250 Odense SV, Denmark

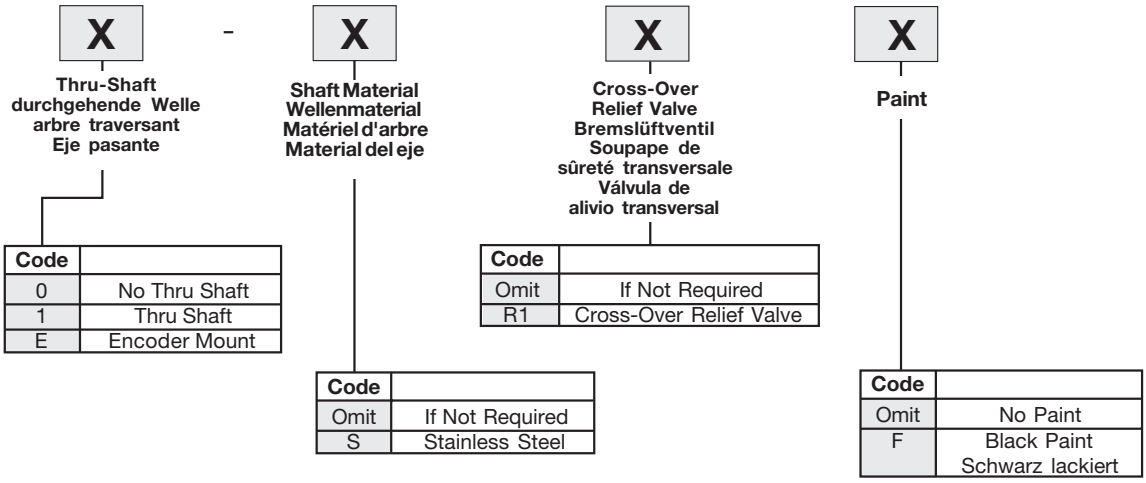

Code	
0	No Thru Shaft
1	Thru Shaft
E	Encoder Mount

Code	
Omit	If Not Required
S	Stainless Steel

Code	
Omit	If Not Required
R1	Cross-Over Relief Valve

Code	
Omit	No Paint
F	Black Paint Schwarz lackiert

Consult factory for other available options, configurations ordering codes and lead times.

WARNING
This product can expose you to chemicals including lead and DEHP, which are known to the State of California to cause cancer, and birth defects or other reproductive harm. For more information go to www.p65warnings.ca.gov

Tel: +45 63 12 83 00 | Email: ps@hymatik.com | www.hymatik.com | Hvidkaervej 27a, DK-5250 Odense SV, Denmark

Performance Data / Leistungsdaten
Puissance / Datos Tecnicos

LSHT Torqmotors™ and Nichols™ Motors
110A Series / Serie / Série HY13-1590-011/US,EU

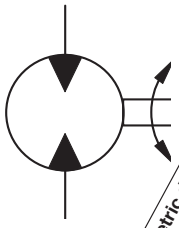

Motor Series 110A	Geometric displacement Geom. Schluckvolumen Cylindrée Cilindrata cm³/rev in³/rev	Max. speed @ Max. intermittent flow Max. Drehzahl Intermittierender Betrieb: Vitesse de rotation maxi Velocidad maxima a caudal intermitente maximo rev/min	Max. oil flow Max. Schluckstrom Débit d'huile maxi Portata max *cont / int** l/min g/min		Max. differential pressure Max. Druckgefälle Chute de pression maxi Presion diferencial maxima *cont / int** bar psid		Max. supply pressure Max. Eingangsdruck Pression maxi entrée Presion maxima de alimentacion *max* bar psig	Max. torque Max. Drehmoment Couple maxi Torque Maximo *cont / int** Nm lb-in		Max. performance Max. Leistungabgabe Puissance de sortie maxi Maximo rendimento *max* KW HP
110A 036	**59** 3.6	898	**45.4** 12	**53.0** 14	**172** 2500	**207** 3000	**276** 4000	**126** 1117	**152** 1349	**10.4** 13.9
110A 054	**89** 5.4	942	**60.6** 16	**83.3** 22	**172** 2500	**207** 3000	**276** 4000	**199** 1765	**241** 2129	**15.3** 20.5
110A 071	**116** 7.1	716	**75.7** 20	**83.3** 22	**172** 2500	**207** 3000	**276** 4000	**278** 2458	**329** 2915	**20.0** 26.8
110A 088	**144** 8.8	787	**75.7** 20	**113.6** 30	**172** 2500	**207** 3000	**276** 4000	**348** 3080	**406** 3593	**16.7** 22.4
110A 106	**174** 10.6	654	**75.7** 20	**113.6** 30	**155** 2250	**190** 2750	**276** 4000	**380** 3359	**451** 3990	**16.7** 22.4
110A 129	**211** 12.9	537	**75.7** 20	**113.6** 30	**155** 2250	**172** 2500	**276** 4000	**458** 4055	**509** 4503	**14.6** 19.6
110A 164	**269** 16.4	423	**75.7** 20	**113.6** 30	**138** 2000	**172** 2500	**276** 4000	**517** 4573	**617** 5462	**13.3** 17.8
110A 189	**310** 18.9	420	**75.7** 20	**113.6** 30	**121** 1750	**172** 2500	**276** 4000	**627** 5548	**651** 5765	**8.6** 11.5
110A 241	**395** 24.1	288	**75.7** 20	**113.6** 30	**121** 1750	**155** 2250	**276** 4000	**622** 5504	**800** 7077	**8.7** 11.7

Performance data based on tests using 15W40 oil with a viscosity of 55 cSt (215 SUS) at 54° C (130° F.) Performance data is typical. Actual data may vary slightly from one production motor to another.

Les donnees sur les performances sont basees sur des tests utilisant de l'huile 15W40 d'une viscosite de 55 cSt (215 SUS) a 54°C (130°F). Ces donnees correspondent a des situations typiques. Les donnees reelles peuvent varier legerement d'un moteur de production a l'autre.

Leistugsdaten sind gemessen mit SAE 15W40 bei einer Viskositaet von 43,1 Cst beo 54°C. Geringfuegige Abweichungen von den Katalogerten sond moeglich.

Datos tecnicos obtenidos con aceite 15W40 de 55 cSt (215 SUS) de viscosidad a 54°C (130°F). Los datos proporcionados son valores tipcos. Los valores exactos reales podrian tener una pequena variacion entre distintos motores.

* Intermittent operation rating applies to 10% of every minute.
Intermittierende Werte maximal 10% von jeder Betriebsminute.
Fonctionnement interm. 10% max. de chaque minute d`utilisation.
Capacidad de funcionamiento intermitente valida para 10% por cada minuto.

WARNING
This product can expose you to chemicals including lead and DEHP, which are known to the State of California to cause cancer, and birth defects or other reproductive harm. For more information go to www.p65warnings.ca.gov

Tel: +45 63 12 83 00 | Email: ps@hymatik.com | www.hymatik.com | Hvidkaervej 27a, DK-5250 Odense SV, Denmark

110A 036

3.6 cu in / rev

PRESSURE (PSID)

	500	1000	1500	2000	2500	3000	3500
2	244 **128**	473 **124**	688 **119**	882 **105**	1031 **82**		
4	238 **257**	471 **251**	700 **245**	905 **226**	1067 **193**	1203 **139**	1293 **87**
6	232 **385**	470 **381**	713 **377**	928 **362**	1103 **331**	1255 **289**	1344 **250**
8	226 **513**	461 **508**	700 **503**	922 **490**	1117 **454**	1289 **403**	1404 **359**
10	221 **642**	453 **635**	688 **629**	917 **622**	1132 **584**	1324 **526**	1464 **481**
12	216 **770**	443 **762**	675 **755**	897 **747**	1117 **708**	1349 **651**	1564 **601**
14	212 **898**	433 **889**	662 **880**	877 **871**	1103 **835**	1375 **782**	1664 **728**

FLOW (GPM)

TORQUE (LB IN) 1664
SPEED (RPM) **728**

110A 054

5.4 cu in / rev

PRESSURE (PSID)

	500	1000	1500	2000	2500	3000	3500
2	365 **86**	716 **83**	1051 **80**	1368 **72**	1635 **58**		
4	365 **171**	713 **167**	1076 **164**	1407 **153**	1700 **134**	1957 **101**	2134 **60**
6	361 **257**	722 **253**	1100 **250**	1445 **244**	1765 **226**	2055 **198**	2278 **171**
8	352 **342**	713 **338**	1057 **334**	1419 **329**	1731 **309**	2020 **278**	2237 **247**
10	340 **428**	713 **424**	1057 **419**	1392 **415**	1697 **396**	1985 **366**	2196 **332**
12	331 **513**	679 **508**	1038 **503**	1382 **498**	1697 **480**	2011 **450**	2316 **408**
14	318 **599**	653 **593**	1019 **587**	1372 **581**	1732 **566**	2129 **536**	2543 **488**
16	309 **684**	636 **678**	987 **671**	1335 **664**	1700 **645**	2091 **618**	2491 **566**
18	281 **770**	600 **762**	955 **755**	1298 **747**	1668 **724**	2052 **701**	2438 **647**
20	264 **856**	567 **849**	880 **843**	1220 **830**	1581 **804**	1947 **785**	2235 **729**
22	247 **942**	541 **936**	824 **931**	1390 **913**	1593 **885**	2026 **871**	2423 **813**

FLOW (GPM)

■ Cont. ■ Cont. with no side load / Int. with rated side load □ Int.

Intermittent operation rating applies to 10% of every minute.

Fonctionnement interm. 10% max. de chaque minute d'utilisation.

Performance data based on tests using 15W40 oil with a viscosity of 55 cSt (215 SUS) at 54° C (130° F.) Performance data is typical. Actual data may vary slightly from one production motor to another.

Les donnees sur les performances sont basees sur des tests utilisant de l'huile 15W40 d'une viscosite de 55 cSt (215 SUS) a 54°C (130°F). Ces donnees correspondent a des situations typiques. Les donnees reelles peuvent varier legerement d'un moteur de production a l'autre.

Intermittierende Werte maximal 10% von jeder Betriebsminute.

Capacidad de funcionamiento intermitente valida para 10% por cada minuto.

Leistugsdaten sind gemessen mit SAE 15W40 bei einer Viskositaet von 43,1 Cst beo 54°C. Geringfuegige Abweichungen von den Katalogerten sond moeglich.

Datos tecnicos obtenidos con aceite 15W40 de 55 cSt (215 SUS) de viscosidad a 54°C (130°F). Los datos proporcionados son valores tipcos. Los valores exactos reales podrian tener una pequena variacion entre distintos motores.

WARNING
This product can expose you to chemicals including lead and DEHP, which are known to the State of California to cause cancer, and birth defects or other reproductive harm. For more information go to www.p65warnings.ca.gov

Tel: +45 63 12 83 00 | Email: ps@hymatik.com | www.hymatik.com | Hvidkaervej 27a, DK-5250 Odense SV, Denmark

110A 071

7.1 cu in / rev

PRESSURE (PSID)

FLOW (GPM)	500	1000	1500	2000	2500	3000	3500
2	480 **65**	949 **63**	1407 **62**	1853 **56**	2260 **47**		
4	480 **130**	994 **128**	1492 **125**	1989 **118**	2430 **105**	2848 **83**	3243 **47**
6	458 **195**	972 **192**	1483 **189**	1966 **187**	2458 **176**	2915 **154**	3322 **133**
8	446 **260**	961 **258**	1475 **255**	1966 **251**	2458 **239**	2915 **219**	3362 **193**
10	424 **325**	927 **322**	1449 **319**	1944 **316**	2444 **306**	2915 **290**	3382 **260**
12	412 **390**	904 **387**	1407 **383**	1921 **379**	2444 **371**	2898 **353**	3391 **316**
14	396 **455**	859 **451**	1373 **447**	1876 **442**	2373 **437**	2882 **419**	3401 **374**
16	379 **521**	825 **515**	1339 **510**	1853 **505**	2345 **497**	2848 **482**	3342 **429**
18	362 **586**	791 **580**	1288 **574**	1785 **568**	2317 **556**	2814 **545**	3283 **486**
20	339 **651**	757 **644**	1237 **638**	1763 **631**	2288 **618**	2780 **608**	3243 **543**
22	305 **716**	701 **709**	1187 **701**	1740 **694**	2232 **680**	2746 **673**	3243 **601**

TORQUE (LB IN) 701
SPEED (RPM) **709**

■ Cont. ■ Cont. with no side load / Int. with rated side load □ Int.

Intermittent operation rating applies to 10% of every minute.

Fonctionnement interm. 10% max. de chaque minute d'utilisation.

Performance data based on tests using 15W40 oil with a viscosity of 55 cSt (215 SUS) at 54° C (130° F.) Performance data is typical. Actual data may vary slightly from one production motor to another.

Les donnees sur les performances sont basees sur des tests utilisant de l'huile 15W40 d'une viscosite de 55 cSt (215 SUS) a 54°C (130°F). Ces donnees correspondent a des situations typiques. Les donnees reelles peuvent varier legerement d'un moteur de production a l'autre.

Intermittierende Werte maximal 10% von jeder Betriebsminute.

Capacidad de funcionamiento intermitente valida para 10% por cada minuto.

Leistugsdaten sind gemessen mit SAE 15W40 bei einer Viskositaet von 43,1 Cst beo 54°C. Geringfuegige Abweichungen von den Katalogerten sond moeglich.

Datos tecnicos obtenidos con aceite 15W40 de 55 cSt (215 SUS) de viscosidad a 54°C (130°F). Los datos proporcionados son valores tipcos. Los valores exactos reales podrian tener una pequena variacion entre distintos motores.

WARNING
This product can expose you to chemicals including lead and DEHP, which are known to the State of California to cause cancer, and birth defects or other reproductive harm. For more information go to www.p65warnings.ca.gov

Tel: +45 63 12 83 00 | Email: ps@hymatik.com | www.hymatik.com | Hvidkaervej 27a, DK-5250 Odense SV, Denmark

110A 088

8.8 cu in / rev

PRESSURE (PSID)

FLOW (GPM)	500	1000	1500	2000	2500	3000	3500
2	605 **52**	1210 **51**	1774 **50**	2324 **48**	2869 **41**		
4	590 **105**	1207 **103**	1804 **102**	2387 **99**	2975 **88**	3475 **73**	3929 **63**
6	574 **158**	1204 **156**	1833 **154**	2451 **152**	3080 **142**	3593 **126**	4141 **107**
8	553 **210**	1183 **208**	1817 **206**	2437 **203**	3067 **192**	3634 **178**	4154 **159**
10	532 **263**	1162 **261**	1801 **259**	2423 **253**	3054 **243**	3675 **235**	4167 **219**
12	509 **315**	1127 **312**	1762 **309**	2381 **303**	3006 **295**	3623 **284**	4179 **264**
14	487 **367**	1092 **363**	1722 **358**	2339 **353**	2958 **347**	3571 **335**	4192 **310**
16	468 **420**	1044 **415**	1659 **411**	2269 **403**	2914 **396**	3529 **384**	4143 **362**
18	448 **472**	997 **468**	1595 **463**	2199 **454**	2870 **444**	3487 **435**	4094 **416**
20	428 **525**	973 **520**	1551 **516**	2178 **507**	2832 **499**	3446 **486**	4051 **458**
22	408 **578**	949 **573**	1506 **569**	2158 **562**	2794 **555**	3405 **537**	4008 **499**
25	348 **656**	846 **651**	1423 **647**	2008 **636**	2610 **625**	3191 **608**	3809 **575**
30	279 **787**	740 **782**	1313 **776**	1821 **760**	2381 **744**	2921 **725**	3555 **697**

TORQUE (LB IN) 4051
SPEED (RPM) 458

Cont. | Cont. with no side load / Int. with rated side load | Int.

Intermittent operation rating applies to 10% of every minute.

Fonctionnement interm. 10% max. de chaque minute d'utilisation.

Performance data based on tests using 15W40 oil with a viscosity of 55 cSt (215 SUS) at 54° C (130° F.) Performance data is typical. Actual data may vary slightly from one production motor to another.

Les donnees sur les performances sont basees sur des tests utilisant de l'huile 15W40 d'une viscosite de 55 cSt (215 SUS) a 54°C (130°F). Ces donnees correspondent a des situations typiques. Les donnees reelles peuvent varier legerement d'un moteur de production a l'autre.

Intermittierende Werte maximal 10% von jeder Betriebsminute.

Capacidad de funcionamiento intermitente valida para 10% por cada minuto.

Leistugsdaten sind gemessen mit SAE 15W40 bei einer Viskositaet von 43,1 Cst beo 54°C. Geringfuegige Abweichungen von den Katalogerten sond moeglich.

Datos tecnicos obtenidos con aceite 15W40 de 55 cSt (215 SUS) de viscosidad a 54°C (130°F). Los datos proporcionados son valores tipcos. Los valores exactos reales podrian tener una pequena variacion entre distintos motores.

WARNING
This product can expose you to chemicals including lead and DEHP, which are known to the State of California to cause cancer, and birth defects or other reproductive harm. For more information go to www.p65warnings.ca.gov

Tel: +45 63 12 83 00 | Email: ps@hymatik.com | www.hymatik.com | Hvidkaervej 27a, DK-5250 Odense SV, Denmark

110A 106

10.6 cu in / rev

PRESSURE (PSID)

FLOW (GPM)	500	1000	1500	1750	2000	2250	2500	2750	3000	3250	3500
2	742 **44**	1501 **43**	2227 **42**	2569 **41**	2919 **40**	3264 **39**	3585 **37**	3897 **34**	4201 **31**	4537 **27**	4871 **23**
4	721 **87**	1485 **86**	2214 **85**	2576 **83**	2935 **82**	3302 **79**	3669 **76**	3990 **71**	4251 **66**	4599 **61**	4945 **57**
6	700 **131**	1468 **129**	2202 **128**	2583 **127**	2969 **126**	3359 **122**	3754 **118**	4036 **112**	4302 **106**	4660 **104**	5019 **102**
8	675 **174**	1442 **173**	2189 **171**	2569 **169**	2952 **166**	3340 **162**	3733 **158**	4071 **153**	4403 **149**	4715 **146**	5019 **144**
10	650 **218**	1417 **216**	2176 **214**	2554 **210**	2935 **207**	3321 **203**	3711 **198**	4106 **197**	4504 **196**	4770 **193**	5019 **190**
12	616 **262**	1383 **258**	2138 **255**	2509 **252**	2885 **248**	3264 **245**	3648 **241**	4025 **238**	4403 **235**	4715 **232**	5019 **229**
14	582 **305**	1350 **301**	2100 **296**	2465 **293**	2834 **290**	3207 **287**	3585 **284**	3943 **279**	4302 **275**	4660 **272**	5019 **268**
16	567 **349**	1278 **344**	2050 **340**	2410 **336**	2775 **331**	3155 **328**	3543 **324**	3903 **320**	4264 **316**	4626 **311**	4989 **307**
18	553 **392**	1206 **388**	1999 **384**	2354 **379**	2716 **373**	3103 **369**	3501 **365**	3862 **361**	4226 **357**	4592 **351**	4960 **345**
20	529 **436**	1168 **431**	1885 **427**	2270 **422**	2674 **416**	3060 **412**	3458 **408**	3822 **403**	4188 **399**		
22	506 **479**	1130 **475**	1771 **470**	2185 **465**	2632 **460**	3018 **455**	3416 **451**	3781 **446**	4150 **441**		
25	492 **545**	1110 **541**	1747 **537**	2145 **531**	2573 **526**	2951 **520**	3342 **515**	3700 **511**	4061 **507**		
30	470 **654**	1076 **651**	1708 **647**	2078 **641**	2474 **634**	2840 **628**	3219 **621**	3564 **615**	3913 **608**		

TORQUE (LB IN) 5019
SPEED (RPM) 229

■ Cont. ▨ Cont. with no side load / Int. with rated side load □ Int.

Intermittent operation rating applies to 10% of every minute.

Fonctionnement interm. 10% max. de chaque minute d'utilisation.

Performance data based on tests using 15W40 oil with a viscosity of 55 cSt (215 SUS) at 54° C (130° F.) Performance data is typical. Actual data may vary slightly from one production motor to another.

Les donnees sur les performances sont basees sur des tests utilisant de l'huile 15W40 d'une viscosite de 55 cSt (215 SUS) a 54°C (130°F). Ces donnees correspondent a des situations typiques. Les donnees reelles peuvent varier legerement d'un moteur de production a l'autre.

Intermittierende Werte maximal 10% von jeder Betriebsminute.

Capacidad de funcionamiento intermitente valida para 10% por cada minuto.

Leistugsdaten sind gemessen mit SAE 15W40 bei einer Viskositaet von 43,1 Cst beo 54°C. Geringfuegige Abweichungen von den Katalogerten sond moeglich.

Datos tecnicos obtenidos con aceite 15W40 de 55 cSt (215 SUS) de viscosidad a 54°C (130°F). Los datos proporcionados son valores tipcos. Los valores exactos reales podrian tener una pequena variacion entre distintos motores.

WARNING
This product can expose you to chemicals including lead and DEHP, which are known to the State of California to cause cancer, and birth defects or other reproductive harm. For more information go to www.p65warnings.ca.gov

Tel: +45 63 12 83 00 | Email: ps@hymatik.com | www.hymatik.com | Hvidkaervej 27a, DK-5250 Odense SV, Denmark

110A 129

12.9 cu in / rev

PRESSURE (PSID)

FLOW (GPM)	500	1000	1500	1750	2000	2250	2500	2750	3000	3250	3500
2	905 **36**	1827 **35**	2698 **34**	3112 **33**	3527 **32**	3943 **31**	4336 **29**	4729 **27**	5115 **25**	5522 **23**	5925 **20**
4	880 **72**	1807 **70**	2691 **69**	3128 **68**	3567 **66**	3999 **64**	4420 **62**	4805 **58**	5180 **55**	5599 **51**	6017 **48**
6	854 **107**	1786 **106**	2684 **105**	3144 **104**	3607 **103**	4055 **100**	4503 **97**	4881 **93**	5245 **89**	5677 **87**	6108 **85**
8	822 **143**	1755 **142**	2666 **140**	3122 **139**	3582 **137**	4035 **134**	4490 **130**	4912 **127**	5330 **123**	5723 **121**	6108 **118**
10	790 **179**	1725 **177**	2648 **175**	3101 **173**	3556 **171**	4015 **168**	4476 **164**	4944 **162**	5416 **160**	5769 **157**	6108 **154**
12	750 **215**	1683 **212**	2605 **210**	3060 **208**	3511 **205**	3965 **202**	4419 **199**	4867 **196**	5324 **193**	5718 **189**	6104 **186**
14	710 **251**	1642 **247**	2562 **244**	3020 **242**	3465 **240**	3914 **237**	4363 **234**	4790 **230**	5233 **226**		
16	685 **287**	1557 **283**	2501 **280**	2948 **277**	3394 **274**	3850 **271**	4309 **268**	4742 **263**	5183 **259**		
18	661 **322**	1472 **319**	2439 **316**	2876 **312**	3322 **307**	3785 **304**	4256 **301**	4695 **297**	5133 **293**		
20	628 **358**	1418 **355**	2294 **351**	2741 **347**	3205 **343**	3651 **339**	4105 **336**	4522 **331**			
22	596 **394**	1363 **390**	2150 **386**	2605 **382**	3089 **378**	3517 **374**	3954 **370**				
25	571 **448**	1322 **444**	2093 **440**	2532 **436**	2997 **431**	3427 **427**	3869 **422**				
30	531 **537**	1254 **533**	1999 **530**	2410 **524**	2843 **519**	3276 **514**					

TORQUE (LB IN) 6108
SPEED (RPM) 154

Cont. | Cont. with no side load / Int. with rated side load | Int.

Intermittent operation rating applies to 10% of every minute.

Fonctionnement interm. 10% max. de chaque minute d'utilisation.

Performance data based on tests using 15W40 oil with a viscosity of 55 cSt (215 SUS) at 54° C (130° F.) Performance data is typical. Actual data may vary slightly from one production motor to another.

Les donnees sur les performances sont basees sur des tests utilisant de l'huile 15W40 d'une viscosite de 55 cSt (215 SUS) a 54°C (130°F). Ces donnees correspondent a des situations typiques. Les donnees reelles peuvent varier legerement d'un moteur de production a l'autre.

Intermittierende Werte maximal 10% von jeder Betriebsminute.

Capacidad de funcionamiento intermitente valida para 10% por cada minuto.

Leistugsdaten sind gemessen mit SAE 15W40 bei einer Viskositaet von 43,1 Cst beo 54°C. Geringfuegige Abweichungen von den Katalogerten sond moeglich.

Datos tecnicos obtenidos con aceite 15W40 de 55 cSt (215 SUS) de viscosidad a 54°C (130°F). Los datos proporcionados son valores tipcos. Los valores exactos reales podrian tener una pequena variacion entre distintos motores.

021 110A.indd, a

WARNING
This product can expose you to chemicals including lead and DEHP, which are known to the State of California to cause cancer, and birth defects or other reproductive harm. For more information go to www.p65warnings.ca.gov

Tel: +45 63 12 83 00 | Email: ps@hymatik.com | www.hymatik.com | Hvidkaervej 27a, DK-5250 Odense SV, Denmark

110A 164

16.4 cu in / rev

PRESSURE (PSID)

FLOW (GPM)	500	1000	1500	1750	2000	2250	2500	2750	3000	3250
2	1155 **28**	2323 **27**	3406 **26**	3928 **25**	4437 **24**	4954 **23**	5462 **22**	5986 **21**	6507 **20**	7020 **19**
4	1122 **56**	2297 **55**	3414 **54**	3963 **53**	4505 **51**	5023 **49**	5530 **48**	6065 **46**	6597 **44**	7124 **43**
6	1088 **85**	2271 **84**	3422 **83**	3997 **82**	4573 **80**	5092 **79**	5599 **77**	6144 **74**	6687 **72**	7227 **70**
8	1047 **113**	2232 **112**	3394 **110**	3963 **109**	4531 **108**	5071 **106**	5605 **104**	6164 **101**	6722 **98**	7247 **95**
10	1005 **141**	2193 **139**	3367 **138**	3928 **137**	4489 **135**	5051 **133**	5612 **131**	6184 **128**	6758 **125**	
12	955 **169**	2061 **167**	3318 **166**	3888 **164**	4463 **163**	5021 **161**	5579 **158**	6141 **155**		
14	904 **197**	2086 **195**	3269 **193**	3878 **192**	4437 **191**	4998 **188**	5547 **185**	6072 **181**		
16	861 **225**	1925 **223**	3191 **221**	3763 **219**	4346 **217**	4908 **215**	5475 **212**			
18	818 **254**	1879 **251**	3113 **248**	3677 **246**	4255 **243**	4827 **241**				
20	783 **282**	1853 **279**	3015 **276**	3577 **273**	4155 **270**	4733 **268**				
22	718 **310**	1710 **307**	2721 **304**	3209 **301**	3706 **297**	4170 **294**				
25	672 **352**	1626 **349**	2596 **345**	3068 **342**	3550 **338**	4038 **335**				
30	596 **423**	1488 **418**	2388 **414**	2832 **410**	3289 **406**	3817 **401**				

TORQUE (LB IN) 6758
SPEED (RPM) 125

Cont. | Cont. with no side load / Int. with rated side load | Int.

Intermittent operation rating applies to 10% of every minute.

Fonctionnement interm. 10% max. de chaque minute d'utilisation.

Performance data based on tests using 15W40 oil with a viscosity of 55 cSt (215 SUS) at 54° C (130° F.) Performance data is typical. Actual data may vary slightly from one production motor to another.

Les donnees sur les performances sont basees sur des tests utilisant de l'huile 15W40 d'une viscosite de 55 cSt (215 SUS) a 54°C (130°F). Ces donnees correspondent a des situations typiques. Les donnees reelles peuvent varier legerement d'un moteur de production a l'autre.

Intermittierende Werte maximal 10% von jeder Betriebsminute.

Capacidad de funcionamiento intermitente valida para 10% por cada minuto.

Leistugsdaten sind gemessen mit SAE 15W40 bei einer Viskositaet von 43,1 Cst beo 54°C. Geringfuegige Abweichungen von den Katalogerten sond moeglich.

Datos tecnicos obtenidos con aceite 15W40 de 55 cSt (215 SUS) de viscosidad a 54°C (130°F). Los datos proporcionados son valores tipcos. Los valores exactos reales podrian tener una pequena variacion entre distintos motores.

WARNING
This product can expose you to chemicals including lead and DEHP, which are known to the State of California to cause cancer, and birth defects or other reproductive harm. For more information go to www.p65warnings.ca.gov

Tel: +45 63 12 83 00 | Email: ps@hymatik.com | www.hymatik.com | Hvidkaervej 27a, DK-5250 Odense SV, Denmark

110A 189

18.9 cu in / rev

PRESSURE (PSID)

FLOW (GPM)	500	1000	1250	1500	1750	2250	2500
2	1285 **23**	2619 **22**	3224 **21**	3838 **20**	4442 **18**	5548 **16**	6131 **13**
4	1264 **47**	2589 **46**	3250 **45**	3859 **44**	4486 **42**	5668 **40**	6282 **38**
6	1228 **73**	2559 **72**	3240 **71**	3865 **70**	4513 **69**	5765 **67**	6409 **66**
8	1171 **97**	2509 **96**	3176 **95**	3829 **94**	4503 **93**	5771 **90**	6439 **89**
10	1114 **121**	2449 **120**	3111 **119**	3793 **118**	4476 **117**	5777 **114**	6468 **112**
12	1065 **145**	2391 **144**	3061 **143**	3750 **142**	4439 **141**	5747 **137**	
14	1016 **169**	2333 **168**	3011 **167**	3707 **166**	4402 **165**	5717 **161**	
16	975 **200**	2257 **199**	2938 **198**	3636 **197**	4326 **195**	5645 **185**	
18	966 **232**	1988 **230**	2506 **228**	3037 **227**	3563 **226**		
20	941 **263**	1815 **261**	2253 **259**	2702 **258**	3143 **256**		
22	916 **295**	1643 **293**	2001 **290**	2367 **288**	2724 **286**		
25	879 **342**	1384 **339**	1622 **335**	1865 **334**	2094 **331**		
30	816 **420**	952 **417**	990 **412**	1027 **410**	1045 **407**		

TORQUE (LB IN) 2724
SPEED (RPM) 286

■ Cont. ■ Cont. with no side load / Int. with rated side load □ Int.

Intermittent operation rating applies to 10% of every minute.

Fonctionnement interm. 10% max. de chaque minute d'utilisation.

Performance data based on tests using 15W40 oil with a viscosity of 55 cSt (215 SUS) at 54° C (130° F.) Performance data is typical. Actual data may vary slightly from one production motor to another.

Les donnees sur les performances sont basees sur des tests utilisant de l'huile 15W40 d'une viscosite de 55 cSt (215 SUS) a 54°C (130°F). Ces donnees correspondent a des situations typiques. Les donnees reelles peuvent varier legerement d'un moteur de production a l'autre.

Intermittierende Werte maximal 10% von jeder Betriebsminute.

Capacidad de funcionamiento intermitente valida para 10% por cada minuto.

Leistugsdaten sind gemessen mit SAE 15W40 bei einer Viskositaet von 43,1 Cst beo 54°C. Geringfuegige Abweichungen von den Katalogerten sond moeglich.

Datos tecnicos obtenidos con aceite 15W40 de 55 cSt (215 SUS) de viscosidad a 54°C (130°F). Los datos proporcionados son valores tipcos. Los valores exactos reales podrian tener una pequena variacion entre distintos motores.

WARNING
This product can expose you to chemicals including lead and DEHP, which are known to the State of California to cause cancer, and birth defects or other reproductive harm. For more information go to www.p65warnings.ca.gov

Tel: +45 63 12 83 00 | Email: ps@hymatik.com | www.hymatik.com | Hvidkaervej 27a, DK-5250 Odense SV, Denmark

110A 241

24.1 cu in / rev

PRESSURE (PSID)

FLOW (GPM)	500	1000	1250	1500	1750	2250
2	1515 **15**	3184 **14**	3884 **12**	4660 **11**	5427 **10**	6645 **9**
4	1534 **35**	3145 **34**	4027 **32**	4718 **30**	5504 **29**	6904 **28**
6	1496 **56**	3107 **55**	4027 **54**	4718 **53**	5504 **52**	7077 **51**
8	1400 **74**	3030 **73**	3884 **72**	4660 **70**	5571 **68**	7163 **66**
10	1304 **93**	2915 **92**	3740 **91**	4603 **90**	5571 **89**	
12	1266 **112**	2851 **112**	3708 **110**	4584 **109**	5549 **107**	
14	1227 **130**	2787 **129**	3676 **128**	4564 **127**	5527 **126**	
16	1189 **149**	2723 **148**	3644 **147**	4545 **146**	5504 **144**	
18	1170 **167**	2685 **166**	3596 **165**	4488 **164**	5437 **162**	
20	1151 **184**	2685 **183**	3596 **182**	4430 **180**	5370 **178**	
22	1112 **205**	2608 **204**	3452 **203**	4258 **202**	5169 **200**	
25	1055 **235**	2455 **232**	3260 **231**	4085 **230**	4900 **228**	
30	959 **288**	2225 **285**	2925 **282**	3682 **279**	4363 **273**	

TORQUE (LB IN) 5169
SPEED (RPM) 200

Cont. | Cont. with no side load / Int. with rated side load | Int.

Intermittent operation rating applies to 10% of every minute.

Fonctionnement interm. 10% max. de chaque minute d'utilisation.

Performance data based on tests using 15W40 oil with a viscosity of 55 cSt (215 SUS) at 54° C (130° F.) Performance data is typical. Actual data may vary slightly from one production motor to another.

Les donnees sur les performances sont basees sur des tests utilisant de l'huile 15W40 d'une viscosite de 55 cSt (215 SUS) a 54°C (130°F). Ces donnees correspondent a des situations typiques. Les donnees reelles peuvent varier legerement d'un moteur de production a l'autre.

Intermittierende Werte maximal 10% von jeder Betriebsminute.

Capacidad de funcionamiento intermitente valida para 10% por cada minuto.

Leistugsdaten sind gemessen mit SAE 15W40 bei einer Viskositaet von 43,1 Cst beo 54°C. Geringfuegige Abweichungen von den Katalogerten sond moeglich.

Datos tecnicos obtenidos con aceite 15W40 de 55 cSt (215 SUS) de viscosidad a 54°C (130°F). Los datos proporcionados son valores tipcos. Los valores exactos reales podrian tener una pequena variacion entre distintos motores.

WARNING
This product can expose you to chemicals including lead and DEHP, which are known to the State of California to cause cancer, and birth defects or other reproductive harm. For more information go to www.p65warnings.ca.gov

Tel: +45 63 12 83 00 | Email: ps@hymatik.com | www.hymatik.com | Hvidkaervej 27a, DK-5250 Odense SV, Denmark

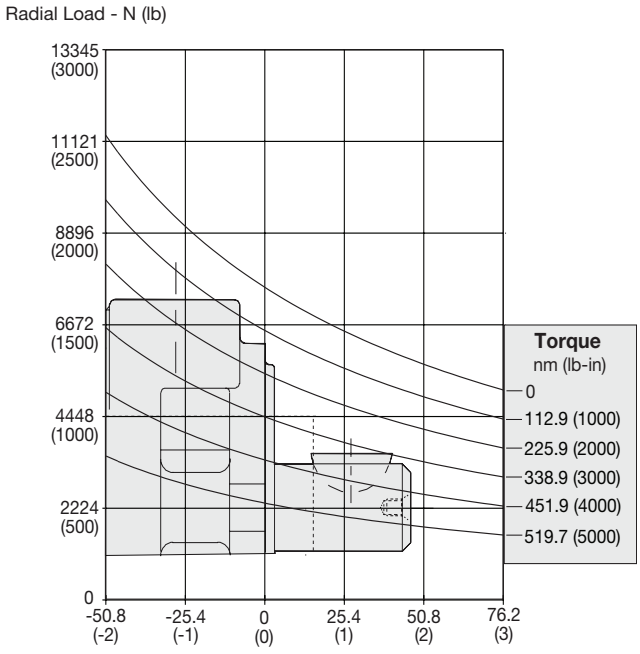

The allowable side load curve is based on L_{10} bushing life of 3 x 10^6 revolutions @ 100 RPM.
Die zulassige radiale Wellenbelastung bezieht sich auf die Lager-Lebensdauer 3 x 10^6 Umdrehungen.
L'effort radial admissible sur l'arbre depend a une duree de vie 3 x 10^6 de rotation.
La curva de carga lateral admisible se basa en vida util de cojinete de 3 x 10 revoluciones.

Equation to Calculate the Expected Radial Bearing Life
Gelichung zur Ermittlung der Lagerlebensdauer

Equation to calculate the dynamic bearing life for a given load:
Bestimmung der erlaubten radialen Wellenbelastung mit vorgegebener Last

Use F_a, F_b and S in equation to determine hours of L_{10} bearing life.
Die Lebensdauer in Stunden ergibt sich durch einsetzen von F_a, F_b, und S in die nachstehende Formel.

$$L = \frac{3.0 \times 10^6}{60 \times S} \left\{\frac{F_a}{F_b}\right\}^{3.33}$$

Where / Mit:

S = Shaft Speed RPM / Abtriebswellendrehzahl in min^{-1}
L = Life In Hours / Lebensdauer in Stunden
F_a = Allowable side load defined by above curve at a distance from mounting flange. / Erlaubte radiale Wellenbelastung als Function der Laenge
F_b = Application side load. / Anwendungsseitige Wellenbelastung

Note: Calculations are based on L_{10} bearing life per ISO 281.
Auslegung basiert auf einer L_{10} Lenbendauer nach ISO 281

WARNING
This product can expose you to chemicals including lead and DEHP, which are known to the State of California to cause cancer, and birth defects or other reproductive harm. For more information go to www.p65warnings.ca.gov

Tel: +45 63 12 83 00 | Email: ps@hymatik.com | www.hymatik.com | Hvidkaervej 27a, DK-5250 Odense SV, Denmark

Code: AM

SAE A 2-Bolt, Manifold

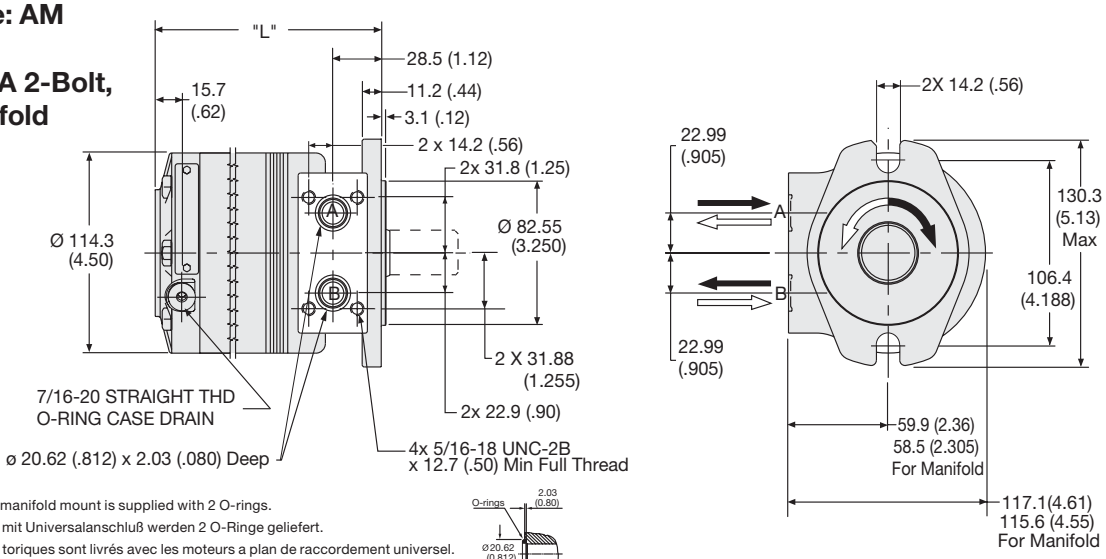

Motor with manifold mount is supplied with 2 O-rings.
Zum Motor mit Universalanschluß werden 2 O-Ringe geliefert.
Deux joints toriques sont livrés avec les moteurs a plan de raccordement universel.
Il blocchetto connessioni é corredato da 2 OR.

Code AM		036	054	071	088	106	129	164	189	241
Weight/Gewicht	**kg**	**7.0**	**7.4**	**7.7**	**8.0**	**8.4**	**8.7**	**9.4**	**9.8**	**10.8**
Poids/Peso	(lb)	(15.4)	(16.2)	(16.9)	(17.5)	(18.4)	(19.1)	(20.6)	(21.6)	(23.7)
Length	**"L" mm**	**112.0**	**116.8**	**121.4**	**126.5**	**131.3**	**137.7**	**147.3**	**154.2**	**168.7**
	"L" (in)	(4.41)	(4.60)	(4.78)	(4.98)	(5.17)	(5.42)	(5.80)	(6.07)	(6.64)

Code: AS

SAE A 2-Bolt, 7/8"-14 SAE O-Ring

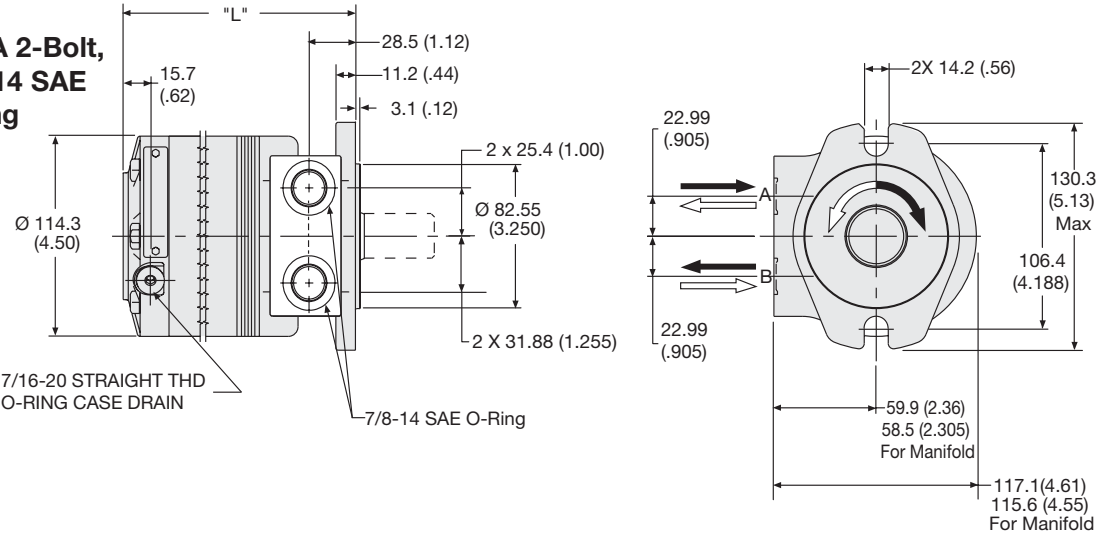

Code AS		036	054	071	088	106	129	164	189	241
Weight/Gewicht	**kg**	**7.0**	**7.4**	**7.7**	**8.0**	**8.4**	**8.7**	**9.4**	**9.8**	**10.8**
Poids/Peso	(lb)	(15.4)	(16.2)	(16.9)	(17.5)	(18.4)	(19.1)	(20.6)	(21.6)	(23.7)
Length	**"L" mm**	**112.0**	**116.8**	**121.4**	**126.5**	**131.3**	**137.7**	**147.3**	**154.2**	**168.7**
	"L" (in)	(4.41)	(4.60)	(4.78)	(4.98)	(5.17)	(5.42)	(5.80)	(6.07)	(6.64)

English equivalents for metric specifications are shown in ( ).

WARNING
This product can expose you to chemicals including lead and DEHP, which are known to the State of California to cause cancer, and birth defects or other reproductive harm. For more information go to www.p65warnings.ca.gov

Tel: +45 63 12 83 00 | Email: ps@hymatik.com | www.hymatik.com | Hvidkaervej 27a, DK-5250 Odense SV, Denmark

Code: AP

SAE A 2-Bolt, 1/2" BSPP

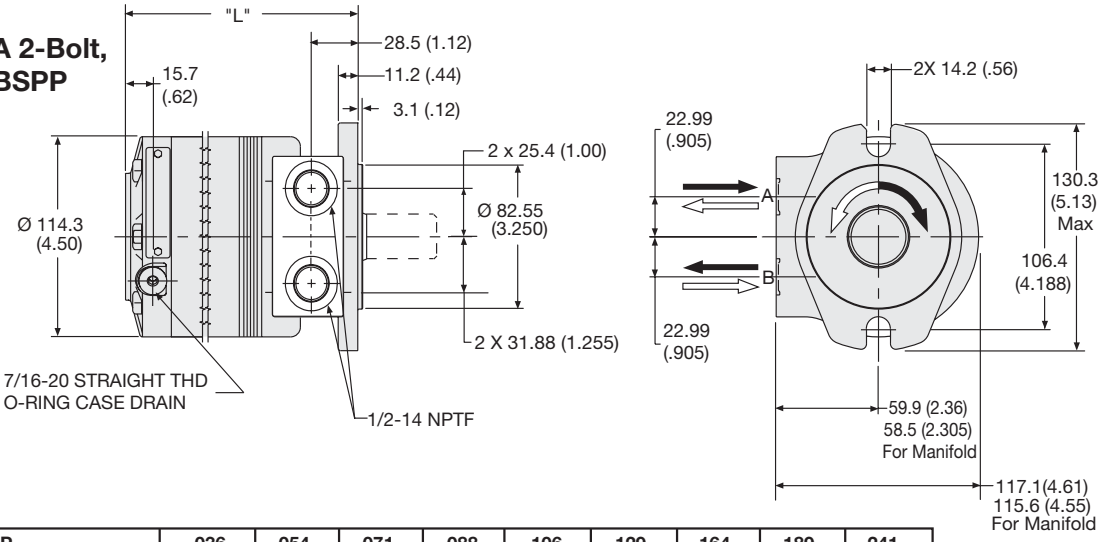

Code AP		036	054	071	088	106	129	164	189	241
Weight/Gewicht	**kg**	**7.0**	**7.4**	**7.7**	**8.0**	**8.4**	**8.7**	**9.4**	**9.8**	**10.8**
Poids/Peso	(lb)	(15.4)	(16.2)	(16.9)	(17.5)	(18.4)	(19.1)	(20.6)	(21.6)	(23.7)
Length	**"L" mm**	**112.0**	**116.8**	**121.4**	**126.5**	**131.3**	**137.7**	**147.3**	**154.2**	**168.7**
	"L" (in)	(4.41)	(4.60)	(4.78)	(4.98)	(5.17)	(5.42)	(5.80)	(6.07)	(6.64)

Code: BM

SAE B 2-Bolt, Manifold

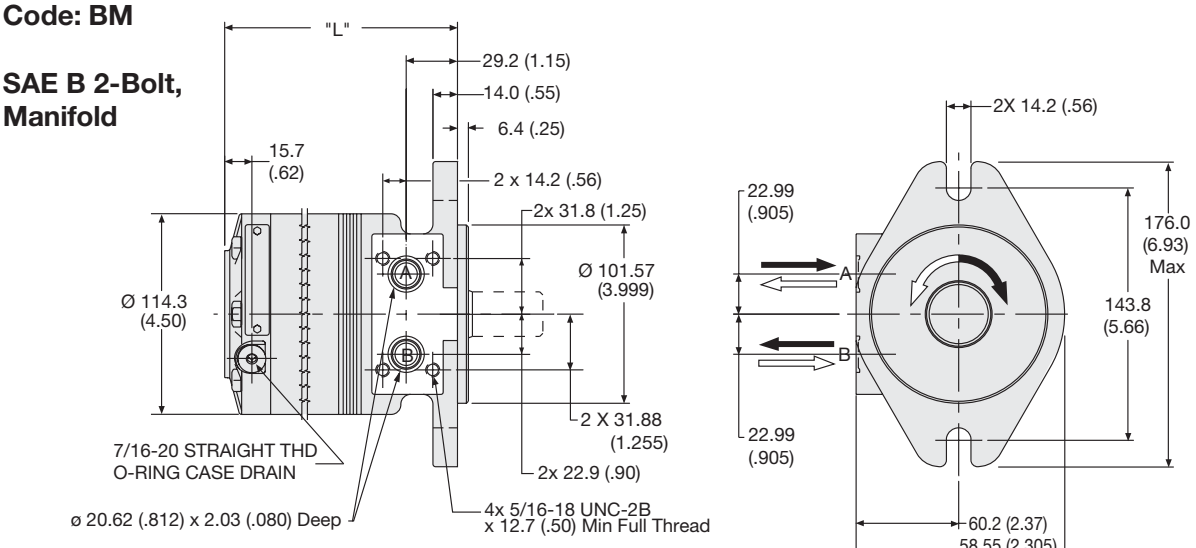

Motor with manifold mount is supplied with 2 O-rings.
Zum Motor mit Universalanschluß werden 2 O-Ringe geliefert.
Deux joints toriques sont livrés avec les moteurs a plan de raccordement universel.
Il blocchetto connessioni é corredato da 2 OR.

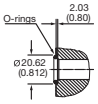

Code BM		036	054	071	088	106	129	164	189	241
Weight/Gewicht	**kg**	**7.0**	**7.4**	**7.7**	**8.0**	**8.4**	**8.7**	**9.4**	**9.8**	**10.8**
Poids/Peso	(lb)	(15.4)	(16.2)	(16.9)	(17.5)	(18.4)	(19.1)	(20.6)	(21.6)	(23.7)
Length	**"L" mm**	**112.0**	**116.8**	**121.4**	**126.5**	**131.3**	**137.7**	**147.3**	**154.2**	**168.7**
	"L" (in)	(4.41)	(4.60)	(4.78)	(4.98)	(5.17)	(5.42)	(5.80)	(6.07)	(6.64)

English equivalents for metric specifications are shown in ( ).

WARNING
This product can expose you to chemicals including lead and DEHP, which are known to the State of California to cause cancer, and birth defects or other reproductive harm. For more information go to www.p65warnings.ca.gov

Tel: +45 63 12 83 00 | Email: ps@hymatik.com | www.hymatik.com | Hvidkaervej 27a, DK-5250 Odense SV, Denmark

Code: BS

SAE B 2-Bolt, 7/8"-14 SAE O-Ring

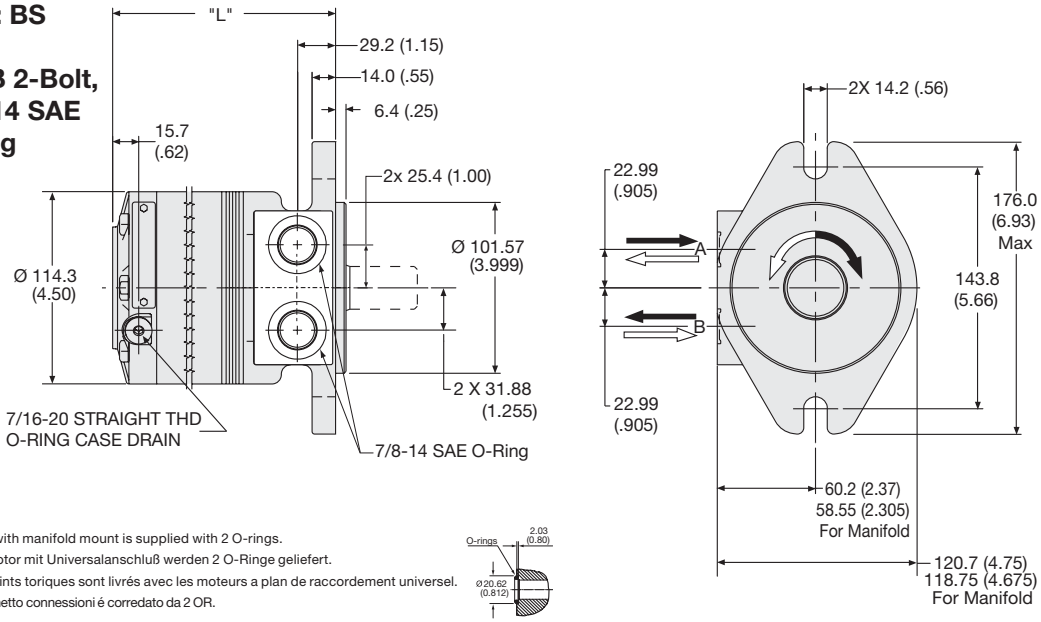

Motor with manifold mount is supplied with 2 O-rings.
Zum Motor mit Universalanschluß werden 2 O-Ringe geliefert.
Deux joints toriques sont livrés avec les moteurs a plan de raccordement universel.
Il blocchetto connessioni é corredato da 2 OR.

Code BS		036	054	071	088	106	129	164	189	241
Weight/Gewicht	**kg**	**7.0**	**7.4**	**7.7**	**8.0**	**8.4**	**8.7**	**9.4**	**9.8**	**10.8**
Poids/Peso	(lb)	(15.4)	(16.2)	(16.9)	(17.5)	(18.4)	(19.1)	(20.6)	(21.6)	(23.7)
Length	**"L" mm**	**112.0**	**116.8**	**121.4**	**126.5**	**131.3**	**137.7**	**147.3**	**154.2**	**168.7**
	"L" (in)	(4.41)	(4.60)	(4.78)	(4.98)	(5.17)	(5.42)	(5.80)	(6.07)	(6.64)

Code: FS

4 Bolt, 7/8-14 SAE O-Ring

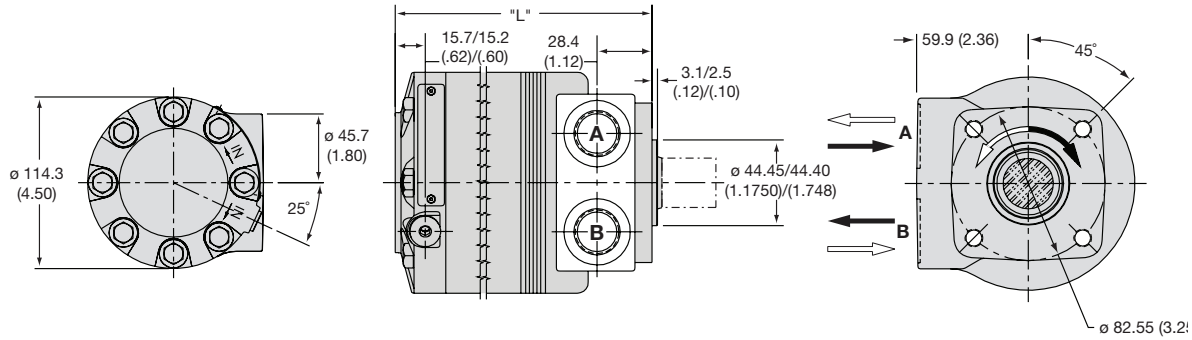

Code FS		036	054	071	088	106	129	164	189	241
Weight/Gewicht	**kg**	**6.7**	**7.0**	**7.3**	**7.6**	**8.0**	**8.3**	**9.0**	**9.5**	**10.4**
Poids/Peso	(lb)	(14.7)	(15.5)	(16.2)	(16.8)	(17.7)	(18.4)	(19.9)	(20.9)	(23.0)
Length	**"L" mm**	**112.0**	**116.8**	**121.4**	**126.5**	**131.3**	**137.7**	**147.3**	**154.2**	**168.7**
	"L" (in)	(4.41)	(4.60)	(4.78)	(4.98)	(5.17)	(5.42)	(5.80)	(6.07)	(6.64)

English equivalents for metric specifications are shown in ( ).

WARNING
This product can expose you to chemicals including lead and DEHP, which are known to the State of California to cause cancer, and birth defects or other reproductive harm. For more information go to www.p65warnings.ca.gov

Tel: +45 63 12 83 00 | Email: ps@hymatik.com | www.hymatik.com | Hvidkaervej 27a, DK-5250 Odense SV, Denmark

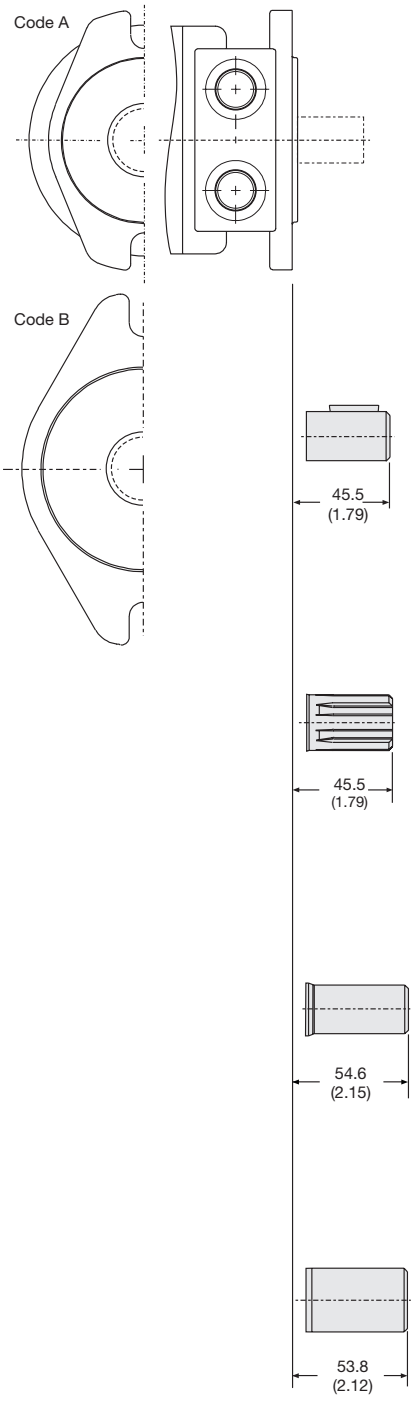

Code: 0

1" Keyed

Code: 1

1" 6B Spline

Code: 2

25mm Keyed

Code: 3

1-1/4" Keyed

English equivalents for metric specifications are shown in ( ).

WARNING
This product can expose you to chemicals including lead and DEHP, which are known to the State of California to cause cancer, and birth defects or other reproductive harm. For more information go to www.p65warnings.ca.gov

Tel: +45 63 12 83 00 | Email: ps@hymatik.com | www.hymatik.com | Hvidkaervej 27a, DK-5250 Odense SV, Denmark

Code: 0

1” Keyed

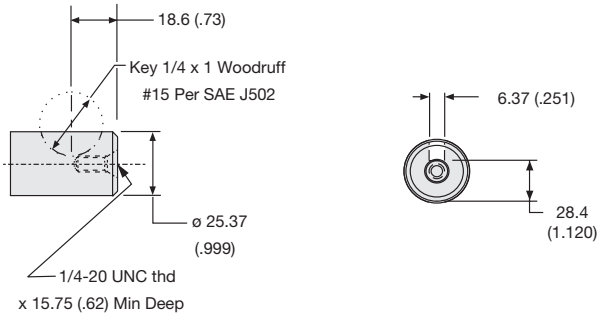

Code: 1

1" 6B Spline

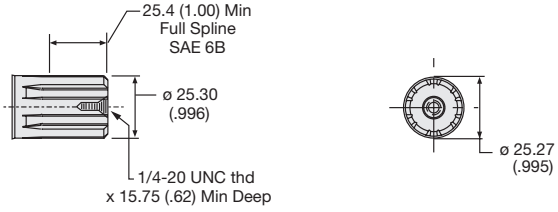

Code: 2

25mm Keyed

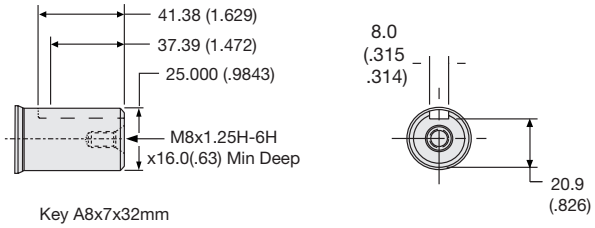

Key A8x7x32mm

Code: 3

1-1/4" Keyed

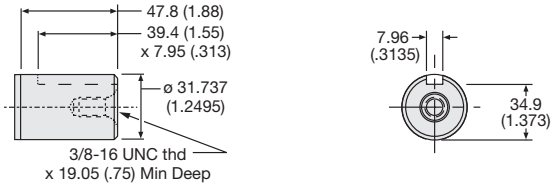

Key 7.950 x 31.5 (.3130 x 1.24) Square

English equivalents for metric specifications are shown in ( ).

WARNING
This product can expose you to chemicals including lead and DEHP, which are known to the State of California to cause cancer, and birth defects or other reproductive harm. For more information go to www.p65warnings.ca.gov

Tel: +45 63 12 83 00 | Email: ps@hymatik.com | www.hymatik.com | Hvidkaervej 27a, DK-5250 Odense SV, Denmark

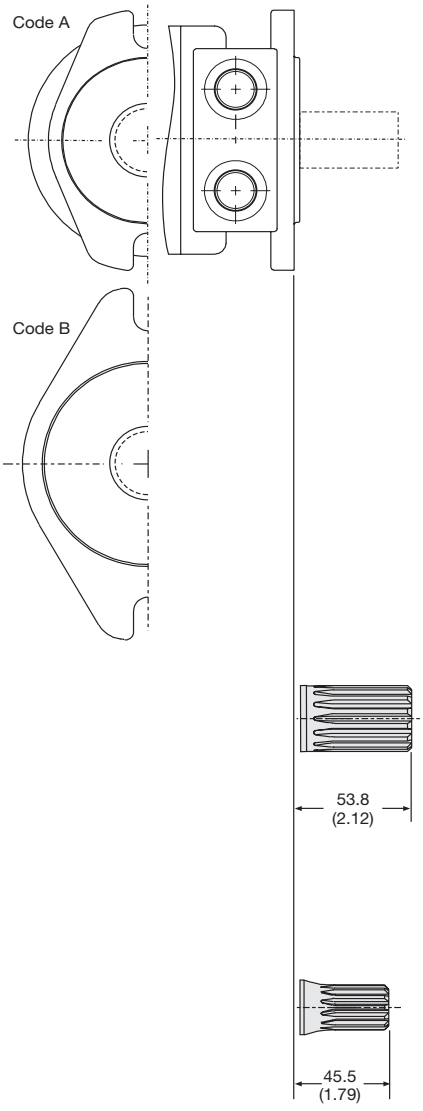

Code: 5

1-1/4"-14 Tooth Spline

Code: 6

7/8"-13 Tooth Spline

English equivalents for metric specifications are shown in ( ).

WARNING
This product can expose you to chemicals including lead and DEHP, which are known to the State of California to cause cancer, and birth defects or other reproductive harm. For more information go to www.p65warnings.ca.gov

Parker Hannifin Corporation
Pump & Motor Division
Greeneville, Tennessee, USA

Tel: +45 63 12 83 00 | Email: ps@hymatik.com | www.hymatik.com | Hvidkaervej 27a, DK-5250 Odense SV, Denmark

Code: 5

1-1/4"-14 Tooth Spline

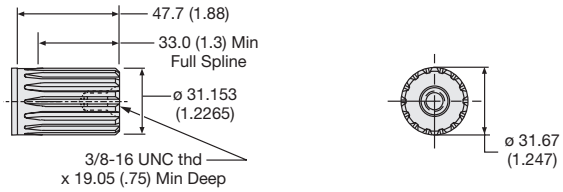

Code: 6

7/8"-13 Tooth Spline

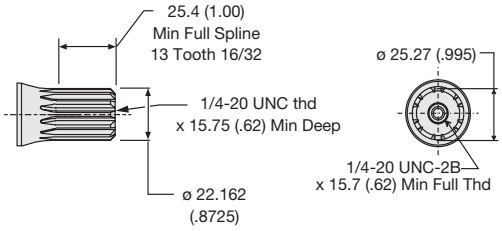

English equivalents for metric specifications are shown in ( ).

6 Displacements	**Series**	(3.6 – 12.9 in³/rev)
6 Schluckvolumen		**59…211 cm³/rev**
6 Cylindrée	**Parallel**	(7.2 – 25.8 in³/rev)
6 Despazamientos		**118…423 cm³/rev**

		Cont	Int
Maximum Pressure	**Series**	(2500 psid)	(3000 psid)
Eingangsdruck		**…170 bar**	**…210 bar**
Pression entrée	**Parallel**	(2500 psid)	(3000 psid)
Pressione Maxima		**…170 bar**	**…210 bar**

Maximum Oil Flow	**Series**	(20 gpm)
Schluckstrom		**…76 lpm**
Débit d'huile	**Parallel**	(30 gpm)
Caudal Maximo de Aceite		**…114 lpm**

Maximum Speed	**Series**	**890 rpm**
Drehzahl	**Parallel**	**782 rpm**
Vitesse de rotation		
Velocidad Maxima		

		Cont	Int
Maximum Torque	**Series**	(3816 lb in)	(4694 lb in)
Max Drehmoment		**…431 Nm**	**…530 Nm**
Couple	**Parallel**	(6648 lb in)	(7463 lb in)
Torque Maximo		**…751 Nm**	**…843 Nm**

Maximum Side Load at Key	**Series**	(2000 lb)
Seitenlast		**… 226 N**
Charges latèrales		
Carga Maxima Lateral		

High Efficiency, High Flow Two-Speed Motor

Parker's unique two-speed motor utilizes two separate IGR™ power elements on a common shaft. An integral selector valve shifts between high torque, low speed (parallel) operation and high speed, low torque (series) mode in a ration of 2:1. The use of two power elements eliminates the deficiencies of traditional, single power element designs. In the high torque mode, the motor delivers twice the torque and half the speed that it does in the high speed mode. The selector valve can be open or closed center and may be actuated by an external pilot or optional solenoid valve. The open center selector valve can be shifted "on the fly" while the motor shaft is rotating under load. The selector valve is spring loaded to return to its pilot-pressure-off position. Normal mode of operation is field changeable and can be selected as series or parallel. Pilot pressure must be 300 psi higher than motor case or outlet pressure and may be as high as typical hydraulic system operating pressure.

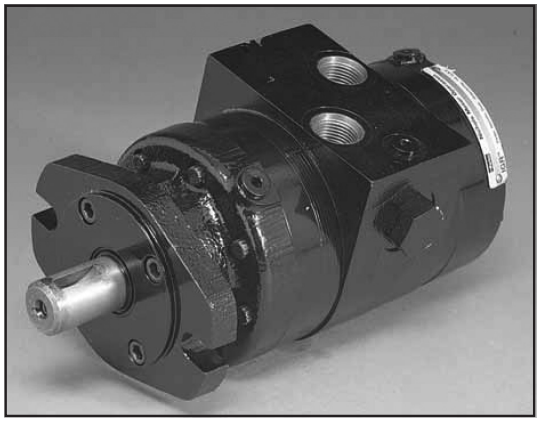

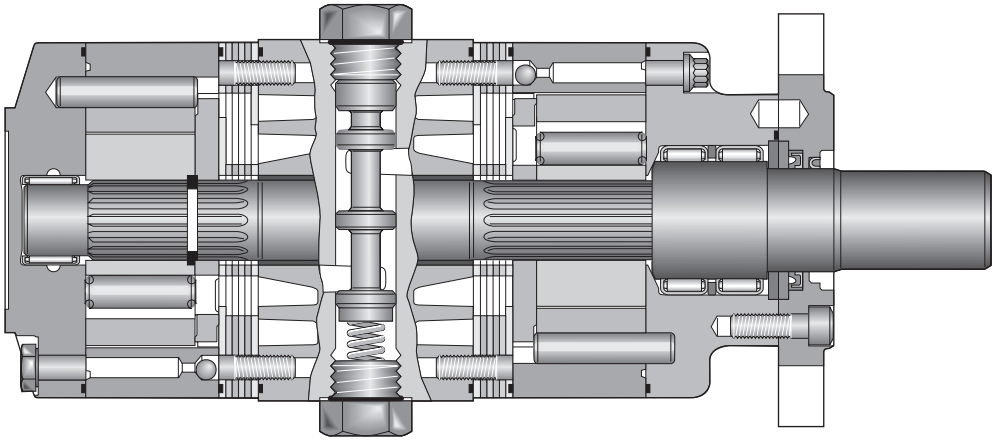

WARNING
This product can expose you to chemicals including lead and DEHP, which are known to the State of California to cause cancer, and birth defects or other reproductive harm. For more information go to www.p65warnings.ca.gov

Parker Hannifin Corporation
Pump & Motor Division
Greeneville, Tennessee, USA

Tel: +45 63 12 83 00 | Email: ps@hymatik.com | www.hymatik.com | Hvidkaervej 27a, DK-5250 Odense SV, Denmark

Ordering Information / Bestellschlüssel
System de Commande / Imformacion para pedidos

LSHT Torqmotors™ and Nichols™ Motors
700 Series / Serie / Série
HY13-1590-011/US,EU

7	0	X	-	XXX	-	X	X	-
Series	Series	Shaft Welle Arbre Ejes		Displacement Schluckvolumen Cylindrée Desplazamiento		Mounting Gehäuse Carter Montaje	Ports Anschluß Plan de raccordement Lumbreras	

Code	
0	1" Keyed 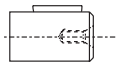
1	1" 6B Spline 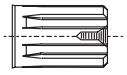
2	25mm Keyed 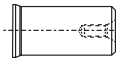
3	1-1/4" Keyed 
5	1-1/4"-14 Tooth Spline 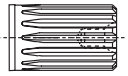
6	7/8"-13 Tooth Spline 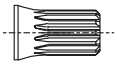

Code	Code	
A	SAE A 2-Bolt	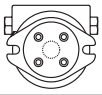
B	SAE B 2-Bolt	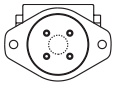

Code		
M	Manifold	
S	7/8"-14 SAE	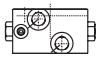

Code	cm³/U cm³/tr cm³/giro	in³/rev
072	60 119	3.6 Series 7.2 Parallel
108	88 176	5.4 Series 10.8 Parallel
142	116 232	7.1 Series 14.2 Parallel
176	144 289	8.8 Series 17.6 Parallel
212	174 348	10.6 Series 21.2 Parallel
258	211 423	12.9 Series 25.8 Parallel

Consult factory for other available options, configurations ordering codes and lead times.

⚠ **WARNING**
This product can expose you to chemicals including lead and DEHP, which are known to the State of California to cause cancer, and birth defects or other reproductive harm. For more information go to www.p65warnings.ca.gov

Tel: +45 63 12 83 00 | Email: ps@hymatik.com | www.hymatik.com | Hvidkaervej 27a, DK-5250 Odense SV, Denmark

Ordering Information / Bestellschlüssel
System de Commande / Imformacion para pedidos

LSHT Torqmotors™ and Nichols™ Motors
700 Series / Serie / Série

HY13-1590-011/US,EU

X - **X** **X** **X** - **X** **X**

- **Thru-Shaft** durchgehende Welle arbre traversant Eje pasante
- **Spool Actuation** Spulenbetätigung Actionnement de la bobine Actuado por bobina
- **Normal Center Position** Normale Mittenposition Position centrale normale Posición central normal
- **Normal Mode of Operation** Normaler Betriebsmodus Mode opératoire normal Modo normal de operación
- **Paint** Anstrich Peinture Pintura
- **Voltage** Spannung Tension Voltaje

Code	
0	No Thru Shaft
1	Thru Shaft
E	Encoder Mount

Code	
O	Open
C	Closed

Code	
Omit	No Paint
F	Black Paint Schwarz lackiert

Code	
P	Remotely Piloted 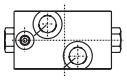
E[1]	Solenoid Actuated with Manual Override 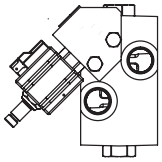
W[1]	Solenoid Actuated without Manual Override 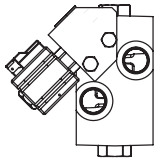

Code	
L	Parallel
R	Series

Code	
Omit	12V DC
31	120V AC

[1] Standard Solenoid is 12V DC with 1/4" Spade Connections.
Standardausführung ist ein 12-V-Gleichstrom-Solenoid mit 1/4-Zoll-Gabelschuhanschlüssen.
Le solénoide standardisé est du type 12 Vcc avec cosses à fourche de 1/4".
La solenoide estándar es para 12 VCC, con conectores tipo bayoneta de 1/4".

Consult factory for other available options, configurations ordering codes and lead times.

WARNING
This product can expose you to chemicals including lead and DEHP, which are known to the State of California to cause cancer, and birth defects or other reproductive harm. For more information go to www.p65warnings.ca.gov

Parker Hannifin Corporation
Pump & Motor Division
Greeneville, Tennessee, USA

Performance Data / Leistungsdaten
Puissance / Datos Tecnicos

LSHT Torqmotors™ and Nichols™ Motors
700 Series / Serie / Série HY13-1590-011/US,EU

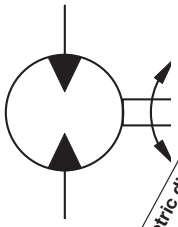

Motor Series 700	cm³/rev in³/rev	*int* rev/min	*cont / int** l/min g/min		*cont / int** bar psid		*max* bar psig	*cont / int** Nm lb-in		*max* KW HP
072 Series	**59** 3.6	898	**42** 11	**53** 14	**241** 3500	**241** 3500	**276** 4000	**181** 1606	**181** 1606	**13.6** 18.3
072 Parallel	**118** 7.2	962	**95** 25	**114** 30	**207** 3000	**241** 3500	**276** 4000	**296** 2620	**335** 2968	**17.2** 23.1
108 Series	**88** 5.4	940	**61** 16	**83** 22	**241** 3500	**241** 3500	**276** 4000	**278** 2463	**278** 2463	**15.7** 21.1
108 Parallel	**177** 10.8	641	**114** 30	**114** 30	**207** 3000	**241** 3500	**276** 4000	**454** 4022	**521** 4614	**16.9** 22.6
142 Series	**116** 7.1	716	**76** 20	**83** 22	**241** 3500	**241** 3500	**276** 4000	**373** 3298	**373** 3298	**19.0** 25.5
142 Parallel	**233** 14.2	488	**114** 30	**114** 30	**207** 3000	**224** 3250	**276** 4000	**594** 5261	**624** 5523	**13.4** 18.0
176 Series	**144** 8.8	786	**76** 20	**114** 30	**241** 3500	**241** 3500	**276** 4000	**470** 4162	**470** 4162	**14.4** 19.3
176 Parallel	**288** 17.6	393	**114** 30	**114** 30	**172** 2500	**190** 2750	**276** 4000	**684** 6050	**738** 6532	**11.8** 15.8
212 Series	**174** 10.6	653	**76** 20	**114** 30	**224** 3250	**224** 3250	**276** 4000	**531** 4702	**531** 4702	**11.8** 15.8
212 Parallel	**347** 21.2	327	**114** 30	**114** 30	**155** 2250	**172** 2500	**276** 4000	**737** 6520	**812** 7187	**8.9** 11.9
258 Series	**211** 12.9	537	**68** 18	**114** 30	**172** 2500	**207** 3000	**276** 4000	**502** 4440	**601** 5318	**9.5** 12.8
258 Parallel	**423** 25.8	268	**114** 30	**114** 30	**138** 2000	**155** 2250	**276** 4000	**798** 7063	**887** 7853	**8.2** 11.0

Performance data based on tests using 15W40 oil with a viscosity of 55 cSt (215 SUS) at 54° C (130° F.) Performance data is typical. Actual data may vary slightly from one production motor to another.

Les donnees sur les performances sont basees sur des tests utilisant de l'huile 15W40 d'une viscosite de 55 cSt (215 SUS) a 54°C (130°F). Ces donnees correspondent a des situations typiques. Les donnees reelles peuvent varier legerement d'un moteur de production a l'autre.

Leistugsdaten sind gemessen mit SAE 15W40 bei einer Viskositaet von 43,1 Cst beo 54°C. Geringfuegige Abweichungen von den Katalogerten sond moeglich.

Datos tecnicos obtenidos con aceite 15W40 de 55 cSt (215 SUS) de viscosidad a 54°C (130°F). Los datos proporcionados son valores tipcos. Los valores exactos reales podrian tener una pequena variacion entre distintos motores.

*Intermittent operation rating applies to 10% of every minute.
Intermittierende Werte maximal 10% von jeder Betriebsminute.
Fonctionnement interm. 10% max. de chaque minute d`utilisation.
Capacidad de funcionamiento intermitente valida para 10% por cada minuto.

WARNING
This product can expose you to chemicals including lead and DEHP, which are known to the State of California to cause cancer, and birth defects or other reproductive harm. For more information go to www.p65warnings.ca.gov

Tel: +45 63 12 83 00 | Email: ps@hymatik.com | www.hymatik.com | Hvidkaervej 27a, DK-5250 Odense SV, Denmark

072 Series

3.6 cu in / rev

PRESSURE (PSID)

FLOW (GPM)	500	1000	1500	2000	2500	3000	3500
2	242 **128**	481 **127**	718 **119**	941 **107**	1143 **88**	1313 **70**	
4	240 **257**	476 **256**	695 **255**	961 **239**	1193 **219**	1399 **194**	1574 **157**
6	217 **385**	449 **384**	697 **382**	947 **378**	1189 **357**	1420 **329**	1606 **289**
8	187 **513**	421 **512**	670 **513**	910 **511**	1155 **492**	1384 **467**	1610 **418**
10	139 **642**	372 **640**	618 **641**	867 **638**	1116 **628**	1361 **599**	1534 **553**
12	74 **770**	307 **770**	553 **768**	818 **768**	1056 **756**	1275 **708**	1496 **671**
14		240 **898**	486 **898**	754 **897**	994 **882**	1191 **847**	1448 **798**

TORQUE (LB IN) 994
SPEED (RPM) **882**

■ Cont. □ Int.

Intermittent operation rating applies to 10% of every minute.

Fonctionnement interm. 10% max. de chaque minute d'utilisation.

Performance data based on tests using 15W40 oil with a viscosity of 55 cSt (215 SUS) at 54° C (130° F.) Performance data is typical. Actual data may vary slightly from one production motor to another.

Les donnees sur les performances sont basees sur des tests utilisant de l'huile 15W40 d'une viscosite de 55 cSt (215 SUS) a 54°C (130°F). Ces donnees correspondent a des situations typiques. Les donnees reelles peuvent varier legerement d'un moteur de production a l'autre.

Intermittierende Werte maximal 10% von jeder Betriebsminute.

Capacidad de funcionamiento intermitente valida para 10% por cada minuto.

Leistugsdaten sind gemessen mit SAE 15W40 bei einer Viskositaet von 43,1 Cst beo 54°C. Geringfuegige Abweichungen von den Katalogerten sond moeglich.

Datos tecnicos obtenidos con aceite 15W40 de 55 cSt (215 SUS) de viscosidad a 54°C (130°F). Los datos proporcionados son valores tipcos. Los valores exactos reales podrian tener una pequena variacion entre distintos motores.

⚠ **WARNING**
This product can expose you to chemicals including lead and DEHP, which are known to the State of California to cause cancer, and birth defects or other reproductive harm. For more information go to www.p65warnings.ca.gov

Tel: +45 63 12 83 00 | Email: ps@hymatik.com | www.hymatik.com | Hvidkaervej 27a, DK-5250 Odense SV, Denmark

072 Parallel

7.2 cu in / rev

PRESSURE (PSID)

FLOW (GPM)	500	1000	1500	2000	2500	3000	3500
2	441 **63**	889 **59**	1272 **48**	1650 **29**			
4	481 **128**	966 **125**	1403 **121**	1824 **104**	2163 **81**		
6	477 **192**	957 **187**	1401 **181**	1813 **159**	2186 **121**	2485 **67**	
8	464 **257**	964 **251**	1428 **244**	1850 **212**	2249 **161**	2578 **90**	
10	437 **321**	941 **320**	1427 **316**	1836 **283**	2243 **240**	2620 **178**	2968 **115**
12	419 **385**	913 **382**	1401 **377**	1833 **353**	2229 **309**	2589 **249**	2960 **174**
14	405 **449**	881 **448**	1384 **444**	1824 **420**	2220 **372**	2582 **300**	2952 **235**
16	395 **513**	858 **510**	1363 **503**	1801 **485**	2192 **438**	2571 **356**	2940 **280**
18	381 **577**	821 **576**	1327 **573**	1769 **553**	2183 **495**	2520 **414**	2931 **334**
20	369 **642**	799 **642**	1308 **641**	1772 **616**	2146 **578**	2513 **507**	2904 **405**
22	350 **706**	779 **706**	1272 **705**	1742 **678**	2114 **608**	2503 **534**	2884 **452**
25		710 **802**	1169 **801**	1604 **770**	1997 **691**	2314 **606**	2647 **513**
30		653 **962**	1066 **962**	1444 **924**	1776 **830**	2097 **728**	2366 **616**

TORQUE (LB IN) 2647
SPEED (RPM) **513**

■ Cont. □ Int.

Intermittent operation rating applies to 10% of every minute.

Fonctionnement interm. 10% max. de chaque minute d'utilisation.

Performance data based on tests using 15W40 oil with a viscosity of 55 cSt (215 SUS) at 54° C (130° F.) Performance data is typical. Actual data may vary slightly from one production motor to another.

Les donnees sur les performances sont basees sur des tests utilisant de l'huile 15W40 d'une viscosite de 55 cSt (215 SUS) a 54°C (130°F). Ces donnees correspondent a des situations typiques. Les donnees reelles peuvent varier legerement d'un moteur de production a l'autre.

Intermittierende Werte maximal 10% von jeder Betriebsminute.

Capacidad de funcionamiento intermitente valida para 10% por cada minuto.

Leistugsdaten sind gemessen mit SAE 15W40 bei einer Viskositaet von 43,1 Cst beo 54°C. Geringfuegige Abweichungen von den Katalogerten sond moeglich.

Datos tecnicos obtenidos con aceite 15W40 de 55 cSt (215 SUS) de viscosidad a 54°C (130°F). Los datos proporcionados son valores tipcos. Los valores exactos reales podrian tener una pequena variacion entre distintos motores.

WARNING
This product can expose you to chemicals including lead and DEHP, which are known to the State of California to cause cancer, and birth defects or other reproductive harm. For more information go to www.p65warnings.ca.gov

Tel: +45 63 12 83 00 | Email: ps@hymatik.com | www.hymatik.com | Hvidkaervej 27a, DK-5250 Odense SV, Denmark

108 Series

5.4 cu in / rev

PRESSURE (PSID)

FLOW (GPM)	500	1000	1500	2000	2500	3000	3500
2	366 **86**	727 **84**	1084 **80**	1431 **74**	1740 **62**	2036 **52**	
4	361 **171**	725 **171**	1071 **170**	1462 **163**	1816 **150**	2122 **135**	2424 **110**
6	329 **257**	690 **256**	1066 **255**	1443 **252**	1812 **242**	2159 **224**	2455 **200**
8	289 **342**	654 **341**	1029 **342**	1395 **340**	1764 **330**	2118 **317**	2463 **288**
10	229 **428**	593 **427**	968 **427**	1337 **425**	1712 **419**	2078 **406**	2375 **379**
12	151 **513**	509 **513**	882 **512**	1271 **511**	1636 **505**	1979 **481**	2324 **459**
14	77 **599**	426 **599**	800 **598**	1194 **596**	1552 **588**	1874 **571**	2253 **547**
16	40 **684**	342 **684**	720 **683**	1133 **680**	1469 **671**	1790 **649**	2146 **656**
18		259 **769**	627 **769**	1031 **765**	1339 **755**	1642 **738**	1961 **731**
20			536 **855**	858 **850**	1139 **845**	1407 **817**	1678 **788**
22			452 **940**	775 **935**	1031 **930**	1277 **899**	1532 **867**

TORQUE (LB IN) 1678
SPEED (RPM) 788

■ Cont. □ Int.

Intermittent operation rating applies to 10% of every minute.

Fonctionnement interm. 10% max. de chaque minute d'utilisation.

Performance data based on tests using 15W40 oil with a viscosity of 55 cSt (215 SUS) at 54° C (130° F.) Performance data is typical. Actual data may vary slightly from one production motor to another.

Les donnees sur les performances sont basees sur des tests utilisant de l'huile 15W40 d'une viscosite de 55 cSt (215 SUS) a 54°C (130°F). Ces donnees correspondent a des situations typiques. Les donnees reelles peuvent varier legerement d'un moteur de production a l'autre.

Intermittierende Werte maximal 10% von jeder Betriebsminute.

Capacidad de funcionamiento intermitente valida para 10% por cada minuto.

Leistugsdaten sind gemessen mit SAE 15W40 bei einer Viskositaet von 43,1 Cst beo 54°C. Geringfuegige Abweichungen von den Katalogerten sond moeglich.

Datos tecnicos obtenidos con aceite 15W40 de 55 cSt (215 SUS) de viscosidad a 54°C (130°F). Los datos proporcionados son valores tipcos. Los valores exactos reales podrian tener una pequena variacion entre distintos motores.

WARNING
This product can expose you to chemicals including lead and DEHP, which are known to the State of California to cause cancer, and birth defects or other reproductive harm. For more information go to www.p65warnings.ca.gov

Tel: +45 63 12 83 00 | Email: ps@hymatik.com | www.hymatik.com | Hvidkaervej 27a, DK-5250 Odense SV, Denmark

108 Parallel

10.8 cu in / rev

PRESSURE (PSID)

FLOW (GPM)	500	1000	1500	2000	2500	3000	3500
2	683 **42**	1366 **40**	1970 **33**				
4	729 **85**	1455 **83**	2140 **78**	2809 **65**	3383 **47**		
6	728 **128**	1465 **124**	2150 **120**	2801 **105**	3399 **76**		
8	711 **171**	1469 **168**	2185 **163**	2856 **142**	3491 **110**		
10	678 **214**	1442 **213**	2182 **211**	2838 **189**	3482 **159**	4104 **77**	
12	651 **257**	1401 **254**	2150 **252**	2833 **235**	3456 **205**	4022 **109**	
14	630 **299**	1362 **298**	2104 **295**	2814 **280**	3445 **246**	4012 **131**	4614 **75**
16	611 **342**	1329 **340**	2095 **335**	2778 **323**	3408 **290**	3981 **226**	4598 **151**
18	587 **385**	1295 **383**	2051 **379**	2756 **368**	3364 **333**	3898 **267**	4519 **184**
20	565 **428**	1250 **426**	2013 **425**	2723 **411**	3335 **382**	3878 **317**	4482 **236**
22	539 **469**	1215 **469**	1962 **467**	2678 **452**	3295 **409**	3847 **338**	4451 **257**
25		1123 **534**	1834 **532**	2515 **513**	3108 **464**	3594 **385**	4309 **290**
30		1037 **641**	1693 **639**	2313 **615**	2828 **557**	3311 **462**	4151 **379**

TORQUE (LB IN) 4309
SPEED (RPM) **290**

■ Cont. □ Int.

Intermittent operation rating applies to 10% of every minute.

Fonctionnement interm. 10% max. de chaque minute d'utilisation.

Performance data based on tests using 15W40 oil with a viscosity of 55 cSt (215 SUS) at 54° C (130° F.) Performance data is typical. Actual data may vary slightly from one production motor to another.

Les donnees sur les performances sont basees sur des tests utilisant de l'huile 15W40 d'une viscosite de 55 cSt (215 SUS) a 54°C (130°F). Ces donnees correspondent a des situations typiques. Les donnees reelles peuvent varier legerement d'un moteur de production a l'autre.

Intermittierende Werte maximal 10% von jeder Betriebsminute.

Capacidad de funcionamiento intermitente valida para 10% por cada minuto.

Leistugsdaten sind gemessen mit SAE 15W40 bei einer Viskositaet von 43,1 Cst beo 54°C. Geringfuegige Abweichungen von den Katalogerten sond moeglich.

Datos tecnicos obtenidos con aceite 15W40 de 55 cSt (215 SUS) de viscosidad a 54°C (130°F). Los datos proporcionados son valores tipcos. Los valores exactos reales podrian tener una pequena variacion entre distintos motores.

⚠ **WARNING**
This product can expose you to chemicals including lead and DEHP, which are known to the State of California to cause cancer, and birth defects or other reproductive harm. For more information go to www.p65warnings.ca.gov

Tel: +45 63 12 83 00 | Email: ps@hymatik.com | www.hymatik.com | Hvidkaervej 27a, DK-5250 Odense SV, Denmark

142 Series

7.1 cu in / rev

PRESSURE (PSID)

FLOW (GPM)	500	1000	1500	2000	2500	3000	3500
2	484 **65**	964 **64**	1434 **62**	1907 **58**	2319 **50**	2759 **43**	
4	474 **130**	968 **130**	1444 **130**	1948 **126**	2410 **118**	2819 **107**	3264 **87**
6	438 **195**	930 **195**	1428 **194**	1926 **192**	2417 **1987**	2875 **174**	3285 **158**
8	391 **260**	889 **260**	1381 **260**	1870 **259**	2359 **253**	2838 **245**	3298 **226**
10	327 **325**	821 **324**	1324 **324**	1804 **323**	2298 **320**	2776 **313**	3215 **295**
12	249 **390**	728 **390**	1226 **390**	1725 **388**	2217 **385**	2664 **372**	3092 **358**
14	184 **455**	643 **455**	1141 **454**	1648 **452**	2116 **447**	2573 **439**	3063 **427**
16	101 **520**	532 **520**	1040 **519**	1558 **516**	2011 **511**	2474 **501**	2949 **497**
18		439 **585**	930 **584**	1441 **581**	1876 **575**	2325 **564**	2790 **559**
20		300 **651**	810 **650**	1275 **647**	1712 **643**	2125 **629**	2535 **612**
22		249 **716**	707 **715**	1169 **711**	1594 **707**	1983 **692**	2386 **673**

TORQUE (LB IN) 2535
SPEED (RPM) 612

■ Cont. □ Int.

Intermittent operation rating applies to 10% of every minute.

Fonctionnement interm. 10% max. de chaque minute d'utilisation.

Performance data based on tests using 15W40 oil with a viscosity of 55 cSt (215 SUS) at 54° C (130° F.) Performance data is typical. Actual data may vary slightly from one production motor to another.

Les donnees sur les performances sont basees sur des tests utilisant de l'huile 15W40 d'une viscosite de 55 cSt (215 SUS) a 54°C (130°F). Ces donnees correspondent a des situations typiques. Les donnees reelles peuvent varier legerement d'un moteur de production a l'autre.

Intermittierende Werte maximal 10% von jeder Betriebsminute.

Capacidad de funcionamiento intermitente valida para 10% por cada minuto.

Leistugsdaten sind gemessen mit SAE 15W40 bei einer Viskositaet von 43,1 Cst beo 54°C. Geringfuegige Abweichungen von den Katalogerten sond moeglich.

Datos tecnicos obtenidos con aceite 15W40 de 55 cSt (215 SUS) de viscosidad a 54°C (130°F). Los datos proporcionados son valores tipcos. Los valores exactos reales podrian tener una pequena variacion entre distintos motores.

WARNING
This product can expose you to chemicals including lead and DEHP, which are known to the State of California to cause cancer, and birth defects or other reproductive harm. For more information go to www.p65warnings.ca.gov

Tel: +45 63 12 83 00 | Email: ps@hymatik.com | www.hymatik.com | Hvidkaervej 27a, DK-5250 Odense SV, Denmark

142 Parallel

14.2 cu in / rev

PRESSURE (PSID)

FLOW (GPM)	500	1000	1500	2000	2500	3000	3250
2	925 **32**	1836 **31**	2668 **26**	3467 **16**			
4	969 **65**	1920 **63**	2860 **57**	3784 **46**	4619 **31**		
6	971 **97**	1963 **94**	2886 **90**	3785 **79**	4619 **55**		
8	954 **130**	1962 **128**	2927 **125**	3858 **108**	4736 **85**		
10	918 **163**	1933 **162**	2921 **160**	3837 **145**	4724 **121**		
12	884 **195**	1882 **193**	2886 **191**	3829 **179**	4685 **164**		
14	857 **228**	1841 **226**	2831 **224**	3796 **212**	4672 **191**		
16	826 **260**	1799 **259**	2816 **255**	3747 **246**	4630 **219**	5261 **164**	
18	790 **293**	1754 **290**	2755 **286**	3703 **280**	4557 **246**	5207 **197**	5523 **164**
20	757 **325**	1709 **323**	2710 **322**	3661 **313**	4528 **273**	5166 **226**	5472 **198**
22	726 **356**	1655 **356**	2648 **353**	3603 **344**	4485 **301**	5099 **245**	5259 **211**
25	452 **406**	1547 **405**	2513 **403**	3441 **390**	4227 **342**	4861 **278**	5068 **239**
30	374 **488**	1436 **486**	2344 **484**	3225 **468**	3921 **410**	4577 **334**	4921 **294**

TORQUE (LB IN) 5068
SPEED (RPM) 239

■ Cont. □ Int.

Intermittent operation rating applies to 10% of every minute.

Fonctionnement interm. 10% max. de chaque minute d'utilisation.

Performance data based on tests using 15W40 oil with a viscosity of 55 cSt (215 SUS) at 54° C (130° F.) Performance data is typical. Actual data may vary slightly from one production motor to another.

Les donnees sur les performances sont basees sur des tests utilisant de l'huile 15W40 d'une viscosite de 55 cSt (215 SUS) a 54°C (130°F). Ces donnees correspondent a des situations typiques. Les donnees reelles peuvent varier legerement d'un moteur de production a l'autre.

Intermittierende Werte maximal 10% von jeder Betriebsminute.

Capacidad de funcionamiento intermitente valida para 10% por cada minuto.

Leistugsdaten sind gemessen mit SAE 15W40 bei einer Viskositaet von 43,1 Cst beo 54°C. Geringfuegige Abweichungen von den Katalogerten sond moeglich.

Datos tecnicos obtenidos con aceite 15W40 de 55 cSt (215 SUS) de viscosidad a 54°C (130°F). Los datos proporcionados son valores tipcos. Los valores exactos reales podrian tener una pequena variacion entre distintos motores.

WARNING
This product can expose you to chemicals including lead and DEHP, which are known to the State of California to cause cancer, and birth defects or other reproductive harm. For more information go to www.p65warnings.ca.gov

Tel: +45 63 12 83 00 | Email: ps@hymatik.com | www.hymatik.com | Hvidkaervej 27a, DK-5250 Odense SV, Denmark

176 Series

8.8 cu in / rev

PRESSURE (PSID)

	500	1000	1500	2000	2500	3000	3500
2	604 **52**	1204 **52**	1788 **50**	2395 **49**	2913 **43**	3521 **38**	
4	588 **105**	1217 **105**	1834 **105**	2445 **104**	3022 **98**	3529 **90**	4142 **73**
6	548 **158**	1179 **157**	1803 **157**	2423 **155**	3039 **153**	3609 **143**	4142 **131**
8	497 **210**	1137 **209**	1748 **210**	2364 **208**	2973 **206**	3584 **201**	4162 **188**
10	436 **263**	1070 **262**	1704 **261**	2291 **260**	2906 **259**	3496 **256**	4098 **244**
12	371 **315**	976 **315**	1601 **315**	2204 **313**	2829 **311**	3441 **305**	4034 **295**
14	332 **367**	899 **367**	1525 **366**	2140 **363**	2717 **361**	3324 **358**	3922 **353**
16	186 **420**	762 **419**	1405 **418**	2017 **416**	2591 **413**	3214 **410**	3814 **400**
18		665 **472**	1284 **471**	1891 **468**	2468 **465**	3088 **462**	3721 **450**
20		553 **524**	1134 **524**	1762 **522**	2388 **519**	2975 **514**	3549 **503**
22		459 **576**	1017 **576**	1636 **574**	2272 **571**	2836 **565**	3417 **554**
25		81 **655**	721 **655**	1375 **652**	1968 **648**	2534 **637**	3113 **624**
30			284 **786**	958 **782**	1562 **778**	2097 **765**	2691 **749**

TORQUE (LB IN) 3549
SPEED (RPM) 503

FLOW (GPM)

■ Cont. □ Int.

Intermittent operation rating applies to 10% of every minute.

Fonctionnement interm. 10% max. de chaque minute d'utilisation.

Performance data based on tests using 15W40 oil with a viscosity of 55 cSt (215 SUS) at 54° C (130° F.) Performance data is typical. Actual data may vary slightly from one production motor to another.

Les donnees sur les performances sont basees sur des tests utilisant de l'huile 15W40 d'une viscosite de 55 cSt (215 SUS) a 54°C (130°F). Ces donnees correspondent a des situations typiques. Les donnees reelles peuvent varier legerement d'un moteur de production a l'autre.

Intermittierende Werte maximal 10% von jeder Betriebsminute.

Capacidad de funcionamiento intermitente valida para 10% por cada minuto.

Leistugsdaten sind gemessen mit SAE 15W40 bei einer Viskositaet von 43,1 Cst beo 54°C. Geringfuegige Abweichungen von den Katalogerten sond moeglich.

Datos tecnicos obtenidos con aceite 15W40 de 55 cSt (215 SUS) de viscosidad a 54°C (130°F). Los datos proporcionados son valores tipcos. Los valores exactos reales podrian tener una pequena variacion entre distintos motores.

WARNING
This product can expose you to chemicals including lead and DEHP, which are known to the State of California to cause cancer, and birth defects or other reproductive harm. For more information go to www.p65warnings.ca.gov

Parker Hannifin Corporation
Pump & Motor Division
Greeneville, Tennessee, USA

Tel: +45 63 12 83 00 | Email: ps@hymatik.com | www.hymatik.com | Hvidkaervej 27a, DK-5250 Odense SV, Denmark

176 Parallel

17.6 cu in / rev

PRESSURE (PSID)

FLOW (GPM)	500	1000	1500	2000	2250	2500	2750
2	1179 **26**	2325 **26**	3403 **22**				
4	1214 **52**	2412 **51**	3601 **44**	4801 **34**			
6	1221 **79**	2479 **75**	3651 **72**	4818 **64**	5338 **55**		
8	1206 **105**	2468 **104**	3693 **101**	4908 **88**	5483 **83**	6050 **70**	
10	1172 **131**	2443 **130**	3685 **129**	4885 **117**	5464 **108**	6036 **97**	6532 **93**
12	1130 **157**	2381 **156**	3651 **155**	4874 **144**	5420 **137**	5980 **125**	6394 **112**
14	1097 **184**	2345 **182**	3613 **180**	4824 **171**	5408 **164**	5966 **149**	6363 **130**
16	1052 **210**	2294 **209**	3567 **206**	4762 **198**	5345 **189**	5924 **175**	6317 **149**
18	1003 **236**	2238 **233**	3487 **229**	4689 **226**	5275 **216**	5812 **208**	6255 **184**
20	955 **262**	2199 **260**	3437 **258**	4639 **253**	5231 **240**	5791 **231**	6209 **205**
22	922 **286**	2123 **286**	3366 **283**	4566 **277**	5200 **264**	5749 **254**	6147 **225**
25	832 **328**	2006 **326**	3240 **324**	4431 **314**	4954 **302**	5413 **289**	5816 **256**
30	689 **393**	1868 **392**	3050 **389**	4224 **377**	4651 **362**	5112 **347**	5546 **307**

TORQUE (LB IN) 5816
SPEED (RPM) 256

■ Cont. □ Int.

Intermittent operation rating applies to 10% of every minute.

Fonctionnement interm. 10% max. de chaque minute d'utilisation.

Performance data based on tests using 15W40 oil with a viscosity of 55 cSt (215 SUS) at 54° C (130° F.) Performance data is typical. Actual data may vary slightly from one production motor to another.

Les donnees sur les performances sont basees sur des tests utilisant de l'huile 15W40 d'une viscosite de 55 cSt (215 SUS) a 54°C (130°F). Ces donnees correspondent a des situations typiques. Les donnees reelles peuvent varier legerement d'un moteur de production a l'autre.

Intermittierende Werte maximal 10% von jeder Betriebsminute.

Capacidad de funcionamiento intermitente valida para 10% por cada minuto.

Leistugsdaten sind gemessen mit SAE 15W40 bei einer Viskositaet von 43,1 Cst beo 54°C. Geringfuegige Abweichungen von den Katalogerten sond moeglich.

Datos tecnicos obtenidos con aceite 15W40 de 55 cSt (215 SUS) de viscosidad a 54°C (130°F). Los datos proporcionados son valores tipcos. Los valores exactos reales podrian tener una pequena variacion entre distintos motores.

WARNING
This product can expose you to chemicals including lead and DEHP, which are known to the State of California to cause cancer, and birth defects or other reproductive harm. For more information go to www.p65warnings.ca.gov

Tel: +45 63 12 83 00 | Email: ps@hymatik.com | www.hymatik.com | Hvidkaervej 27a, DK-5250 Odense SV, Denmark

212 Series

10.6 cu in / rev

PRESSURE (PSID)

	500	1000	1500	1750	2000	2250	2500	2750	3000	3250
2	731 **44**	1458 **43**	2162 **42**	2509 **42**	2901 **40**	3175 **39**	3532 **36**			
4	712 **87**	1468 **87**	2210 **87**	2562 **87**	2946 **86**	3274 **84**	3641 **81**	3955 **80**	4269 **75**	4623 **71**
6	665 **131**	1426 **130**	2175 **130**	2553 **129**	2920 **128**	3290 **127**	3658 **127**	4009 **123**	4351 **119**	4702 **115**
8	603 **174**	1371 **174**	2110 **174**	2473 **173**	2854 **173**	3229 **171**	3587 **170**	3961 **170**	4323 **166**	4674 **161**
10	527 **218**	1287 **217**	2053 **217**	2406 **216**	2767 **215**	3136 **215**	3508 **214**	3872 **213**	4223 **212**	
12	450 **262**	1182 **261**	1935 **261**	2315 **260**	2665 **259**	3040 **258**	3414 **257**	3775 **256**	4150 **251**	
14	390 **305**	1089 **304**	1844 **303**	2210 **302**	2588 **301**	2940 **300**	3291 **299**	3667 **298**	3948 **293**	
16	225 **349**	929 **348**	1703 **347**	2076 **346**	2443 **346**	2789 **345**	3149 **343**	3526 **338**	3846 **335**	
18		806 **391**	1559 **391**	1921 **389**	2300 **389**	2672 **388**	2995 **384**	3340 **380**	3644 **377**	
20		669 **435**	1377 **435**	1769 **434**	2128 **433**	2498 **432**	2741 **427**	2992 **423**	3239 **418**	
22		567 **478**	1244 **478**	1612 **477**	1994 **476**	2337 **475**	2657 **470**	2876 **465**	3113 **460**	
25		153 **544**	900 **544**	1244 **543**	1676 **541**	2037 **540**	2404 **534**	2830 **528**	3037 **523**	
30			398 **653**	732 **651**	1183 **650**	1534 **648**	1898 **641**	2366 **641**	2531 **628**	

FLOW (GPM)

TORQUE (LB IN) 3113
SPEED (RPM) 460

■ Cont. □ Int.

Intermittent operation rating applies to 10% of every minute.

Fonctionnement interm. 10% max. de chaque minute d'utilisation.

Performance data based on tests using 15W40 oil with a viscosity of 55 cSt (215 SUS) at 54° C (130° F.) Performance data is typical. Actual data may vary slightly from one production motor to another.

Les donnees sur les performances sont basees sur des tests utilisant de l'huile 15W40 d'une viscosite de 55 cSt (215 SUS) a 54°C (130°F). Ces donnees correspondent a des situations typiques. Les donnees reelles peuvent varier legerement d'un moteur de production a l'autre.

Intermittierende Werte maximal 10% von jeder Betriebsminute.

Capacidad de funcionamiento intermitente valida para 10% por cada minuto.

Leistugsdaten sind gemessen mit SAE 15W40 bei einer Viskositaet von 43,1 Cst beo 54°C. Geringfuegige Abweichungen von den Katalogerten sond moeglich.

Datos tecnicos obtenidos con aceite 15W40 de 55 cSt (215 SUS) de viscosidad a 54°C (130°F). Los datos proporcionados son valores tipcos. Los valores exactos reales podrian tener una pequena variacion entre distintos motores.

WARNING
This product can expose you to chemicals including lead and DEHP, which are known to the State of California to cause cancer, and birth defects or other reproductive harm. For more information go to www.p65warnings.ca.gov

Tel: +45 63 12 83 00 | Email: ps@hymatik.com | www.hymatik.com | Hvidkaervej 27a, DK-5250 Odense SV, Denmark

212 Parallel

21.2 cu in / rev

PRESSURE (PSID)

FLOW (GPM)	500	1000	1250	1500	1750	2000	2250	2500
2	1413 **22**	2789 **21**	3434 **19**	4057 **18**	4676 **15**	5276 **11**		
4	1455 **44**	2874 **42**	3580 **39**	4299 **36**	5036 **34**	5719 **29**		
6	1471 **65**	2970 **63**	3686 **61**	4380 **60**	5047 **56**	5777 **52**	6388 **46**	
8	1455 **87**	2964 **86**	3698 **85**	4429 **84**	5163 **80**	5877 **73**	6498 **69**	7170 **47**
10	1413 **109**	2938 **108**	3678 **108**	4429 **107**	5135 **103**	5869 **98**	6520 **90**	7187 **65**
12	1366 **131**	2871 **129**	3627 **129**	4390 **128**	5112 **127**	5845 **120**	6492 **115**	7069 **105**
14	1326 **153**	2827 **151**	3542 **150**	4256 **149**	5052 **148**	5785 **143**	6476 **137**	6984 **122**
16	1269 **174**	2767 **173**	3522 **172**	4241 **171**	5005 **169**	5718 **165**	6400 **158**	6900 **139**
18	1215 **196**	2699 **194**	3445 **193**	4207 **191**	4948 **190**	5643 **188**	6326 **180**	6833 **157**
20	1158 **218**	2656 **216**	3393 **215**	4153 **213**	4898 **209**	5587 **210**	6210 **200**	6790 **174**
22	1114 **240**	2572 **238**	3297 **237**	4068 **236**	4806 **234**	5493 **230**	6226 **220**	6740 **192**
25	1004 **272**	2439 **271**	3165 **270**	3897 **269**	4659 **266**	5347 **261**	5982 **252**	6647 **218**
30	831 **327**	2299 **325**	2973 **324**	3690 **323**	4393 **319**	5093 **313**	5709 **302**	6267 **262**

TORQUE (LB IN) 6647
SPEED (RPM) 218

☐ Cont. ☐ Int.

Intermittent operation rating applies to 10% of every minute.

Fonctionnement interm. 10% max. de chaque minute d'utilisation.

Performance data based on tests using 15W40 oil with a viscosity of 55 cSt (215 SUS) at 54° C (130° F.) Performance data is typical. Actual data may vary slightly from one production motor to another.

Les donnees sur les performances sont basees sur des tests utilisant de l'huile 15W40 d'une viscosite de 55 cSt (215 SUS) a 54°C (130°F). Ces donnees correspondent a des situations typiques. Les donnees reelles peuvent varier legerement d'un moteur de production a l'autre.

Intermittierende Werte maximal 10% von jeder Betriebsminute.

Capacidad de funcionamiento intermitente valida para 10% por cada minuto.

Leistugsdaten sind gemessen mit SAE 15W40 bei einer Viskositaet von 43,1 Cst beo 54°C. Geringfuegige Abweichungen von den Katalogerten sond moeglich.

Datos tecnicos obtenidos con aceite 15W40 de 55 cSt (215 SUS) de viscosidad a 54°C (130°F). Los datos proporcionados son valores tipcos. Los valores exactos reales podrian tener una pequena variacion entre distintos motores.

WARNING
This product can expose you to chemicals including lead and DEHP, which are known to the State of California to cause cancer, and birth defects or other reproductive harm. For more information go to www.p65warnings.ca.gov

Tel: +45 63 12 83 00 | Email: ps@hymatik.com | www.hymatik.com | Hvidkaervej 27a, DK-5250 Odense SV, Denmark

258 Series

12.9 cu in / rev

PRESSURE (PSID)

FLOW (GPM)	500	1000	1500	1750	2000	2250	2500	2750	3000
2	905 **36**	1811 **36**	2673 **35**	3155 **35**	3613 **33**	3950 **33**	4414 **31**	4822 **30**	5226 **26**
4	882 **72**	1799 **72**	2692 **71**	3147 **71**	3585 **70**	4014 **69**	4440 **66**	4850 **65**	5287 **62**
6	834 **107**	1762 **107**	2645 **106**	3119 **106**	3560 **104**	4000 **104**	4440 **103**	4856 **101**	5318 **98**
8	757 **143**	1675 **143**	2593 **142**	3036 **141**	3507 **140**	3940 **139**	4399 **138**	4839 **137**	5292 **135**
10	652 **179**	1556 **178**	2504 **177**	2957 **176**	3400 **175**	3857 **174**	4306 **173**	4771 **172**	5201 **171**
12	565 **215**	1472 **213**	2390 **212**	2867 **210**	3289 **208**	3737 **208**	4188 **207**	4635 **207**	5072 **205**
14	423 **251**	1357 **249**	2279 **249**	2731 **248**	3199 **245**	3668 **243**	4096 **243**	4517 **241**	4957 **239**
16	278 **287**	1187 **286**	2125 **286**	2587 **285**	3043 **284**	3525 **283**	3973 **283**		
18		1006 **321**	1962 **321**	2440 **319**	2911 **319**	3349 **318**			
20		827 **357**	1728 **357**	2264 **356**	2620 **355**	3003 **354**			
22		758 **393**	1614 **393**	2037 **392**	2546 **390**	2975 **390**			
25		466 **446**	1260 **446**	1681 **446**	2135 **445**	2624 **443**			
30			773 **537**	1099 **536**	1585 **535**	2079 **534**			

TORQUE (LB IN) 1099
SPEED (RPM) **536**

■ Cont. □ Int.

Intermittent operation rating applies to 10% of every minute.

Fonctionnement interm. 10% max. de chaque minute d'utilisation.

Performance data based on tests using 15W40 oil with a viscosity of 55 cSt (215 SUS) at 54° C (130° F.) Performance data is typical. Actual data may vary slightly from one production motor to another.

Les donnees sur les performances sont basees sur des tests utilisant de l'huile 15W40 d'une viscosite de 55 cSt (215 SUS) a 54°C (130°F). Ces donnees correspondent a des situations typiques. Les donnees reelles peuvent varier legerement d'un moteur de production a l'autre.

Intermittierende Werte maximal 10% von jeder Betriebsminute.

Capacidad de funcionamiento intermitente valida para 10% por cada minuto.

Leistugsdaten sind gemessen mit SAE 15W40 bei einer Viskositaet von 43,1 Cst beo 54°C. Geringfuegige Abweichungen von den Katalogerten sond moeglich.

Datos tecnicos obtenidos con aceite 15W40 de 55 cSt (215 SUS) de viscosidad a 54°C (130°F). Los datos proporcionados son valores tipcos. Los valores exactos reales podrian tener una pequena variacion entre distintos motores.

⚠ **WARNING**
This product can expose you to chemicals including lead and DEHP, which are known to the State of California to cause cancer, and birth defects or other reproductive harm. For more information go to www.p65warnings.ca.gov

Tel: +45 63 12 83 00 | Email: ps@hymatik.com | www.hymatik.com | Hvidkaervej 27a, DK-5250 Odense SV, Denmark

258 Parallel

25.8 cu in / rev

PRESSURE (PSID)

FLOW (GPM)	500	1000	1250	1500	1750	2000	2250
2	1679 **18**	3334 **15**	4055 **14**	4724 **12**			
4	1731 **36**	3474 **34**	4224 **32**	5038 **30**	5979 **27**	6636 **25**	
6	1790 **54**	3531 **53**	4419 **51**	5235 **48**	6072 **45**	6898 **42**	7557 **38**
8	1782 **71**	3564 **71**	4435 **71**	5291 **68**	6115 **66**	6981 **60**	7715 **56**
10	1727 **89**	3552 **89**	4424 **88**	5340 **87**	6209 **84**	7063 **81**	7853 **76**
12	1684 **107**	3511 **107**	4424 **106**	5303 **104**	6187 **103**	6981 **100**	7715 **97**
14	1636 **125**	3457 **124**	4373 **124**	5279 **123**	6108 **123**	6915 **120**	7650 **118**
16	1556 **143**	3388 **143**	4312 **143**	5223 **142**	6050 **140**	6866 **138**	7594 **135**
18	1515 **161**	3301 **161**	4240 **160**	5149 **160**	6022 **159**	6841 **155**	7557 **151**
20	1445 **179**	3273 **179**	4193 **178**	5118 **178**	5979 **178**	6800 **172**	7502 **168**
22	1378 **197**	3203 **197**	4060 **196**	5020 **196**	5878 **195**	6652 **189**	7391 **185**
25	1234 **224**	3084 **224**	3998 **223**	4866 **222**	5763 **222**	6553 **215**	7354 **210**
30	1018 **268**	3043 **268**	3798 **267**	4570 **266**	5468 **266**	6225 **258**	6975 **252**

TORQUE (LB IN) 7354
SPEED (RPM) 210

■ Cont. □ Int.

Intermittent operation rating applies to 10% of every minute.

Fonctionnement interm. 10% max. de chaque minute d'utilisation.

Performance data based on tests using 15W40 oil with a viscosity of 55 cSt (215 SUS) at 54° C (130° F.) Performance data is typical. Actual data may vary slightly from one production motor to another.

Les donnees sur les performances sont basees sur des tests utilisant de l'huile 15W40 d'une viscosite de 55 cSt (215 SUS) a 54°C (130°F). Ces donnees correspondent a des situations typiques. Les donnees reelles peuvent varier legerement d'un moteur de production a l'autre.

Intermittierende Werte maximal 10% von jeder Betriebsminute.

Capacidad de funcionamiento intermitente valida para 10% por cada minuto.

Leistugsdaten sind gemessen mit SAE 15W40 bei einer Viskositaet von 43,1 Cst beo 54°C. Geringfuegige Abweichungen von den Katalogerten sond moeglich.

Datos tecnicos obtenidos con aceite 15W40 de 55 cSt (215 SUS) de viscosidad a 54°C (130°F). Los datos proporcionados son valores tipcos. Los valores exactos reales podrian tener una pequena variacion entre distintos motores.

WARNING
This product can expose you to chemicals including lead and DEHP, which are known to the State of California to cause cancer, and birth defects or other reproductive harm. For more information go to www.p65warnings.ca.gov

Tel: +45 63 12 83 00 | Email: ps@hymatik.com | www.hymatik.com | Hvidkaervej 27a, DK-5250 Odense SV, Denmark

700 Series Roller Bearing Allowable Radial Load Curve
Chart A

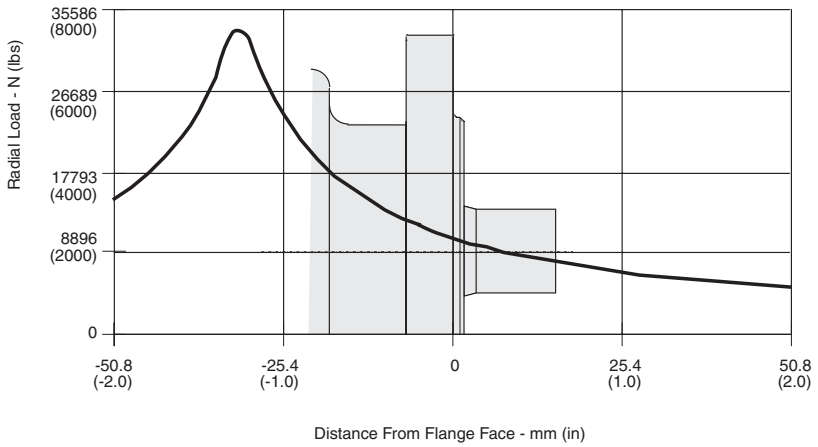

The allowable side load curve is based on L_{10} bearing life of 2.5 x 10^6 revolutions.
Die zulassige radiale Wellenbelastung bezieht sich auf die Lager-Lebensdauer 2.5 x 10^6 Umdrehungen.
L'effort radial admissible sur l'arbre depend a une duree de vie 2.5 x 10^6 de rotation.
La curva de carga lateral admisible se basa en vida util de cojinete de 2.5 x 10^6 revoluciones.

Bearing Life Factor Curve
Chart B

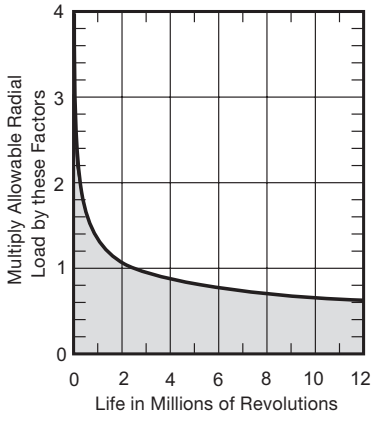

Note:
Side load should be considered a vector sum of all imposed loads.

English equivalents for metric specifications are shown in ( ).

WARNING
This product can expose you to chemicals including lead and DEHP, which are known to the State of California to cause cancer, and birth defects or other reproductive harm. For more information go to www.p65warnings.ca.gov

Tel: +45 63 12 83 00 | Email: ps@hymatik.com | www.hymatik.com | Hvidkaervej 27a, DK-5250 Odense SV, Denmark

Code: AM
SAE A, Manifold

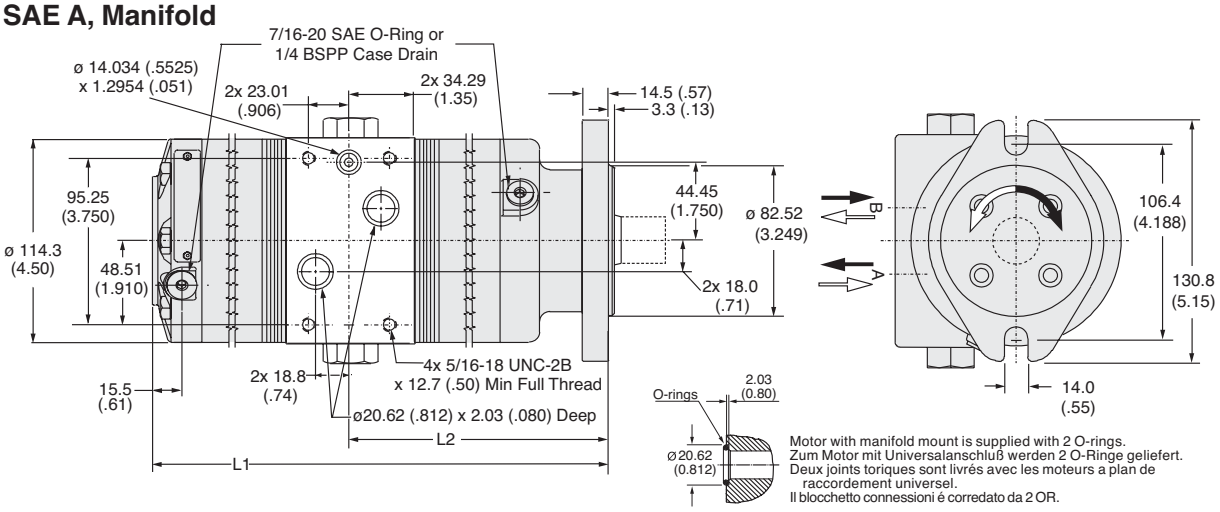

Code AM		072	108	142	176	212	258
Weight/Gewicht	**kg**	**15.9**	**16.1**	**16.2**	**16.4**	**16.6**	**16.8**
Poids/Peso	(lb)	(35.0)	(35.4)	(35.7)	(36.1)	(36.5)	(37.0)
Length	**"L1" mm**	**214.6**	**224.3**	**233.7**	**243.3**	**253.2**	**266.0**
	"L1" (in)	(8.45)	(8.83)	(9.20)	(9.58)	(9.97)	(10.47)
	"L2" mm	**123.2**	**128.0**	**132.9**	**137.7**	**142.5**	**148.8**
	"L2" (in)	(4.85)	(5.04)	(5.23)	(5.42)	(5.61)	(5.86)

Code: AS
SAE A, 7/8"-14 SAE

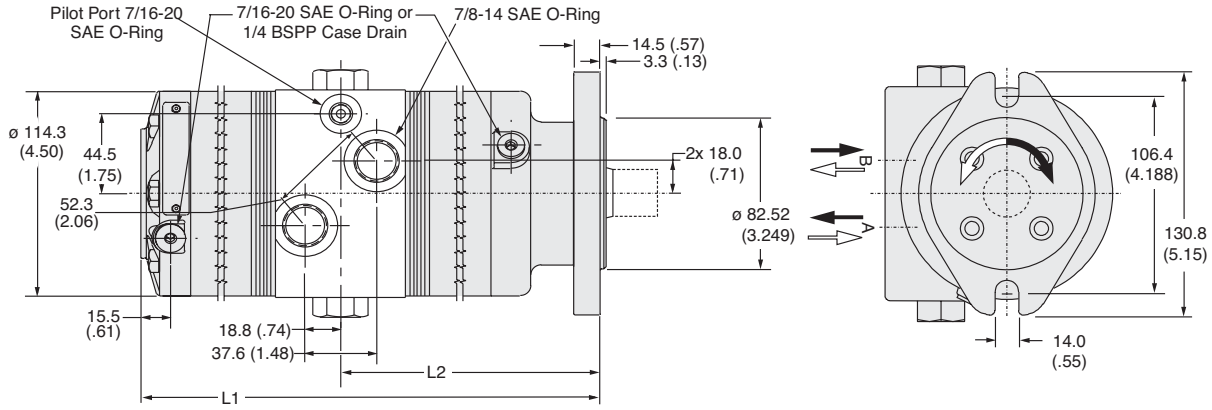

Code AS		072	108	142	176	212	258
Weight/Gewicht	**kg**	**15.9**	**16.1**	**16.2**	**16.4**	**16.6**	**16.8**
Poids/Peso	(lb)	(35.0)	(35.4)	(35.7)	(36.1)	(36.5)	(37.0)
Length	**"L1" mm**	**214.6**	**224.3**	**233.7**	**243.3**	**253.2**	**266.0**
	"L1" (in)	(8.45)	(8.83)	(9.20)	(9.58)	(9.97)	(10.47)
	"L2" mm	**123.2**	**128.0**	**132.9**	**137.7**	**142.5**	**148.8**
	"L2" (in)	(4.85)	(5.04)	(5.23)	(5.42)	(5.61)	(5.86)

English equivalents for metric specifications are shown in ( ).

WARNING
This product can expose you to chemicals including lead and DEHP, which are known to the State of California to cause cancer, and birth defects or other reproductive harm. For more information go to www.p65warnings.ca.gov

Tel: +45 63 12 83 00 | Email: ps@hymatik.com | www.hymatik.com | Hvidkaervej 27a, DK-5250 Odense SV, Denmark

Code: BM
SAE B, Manifold

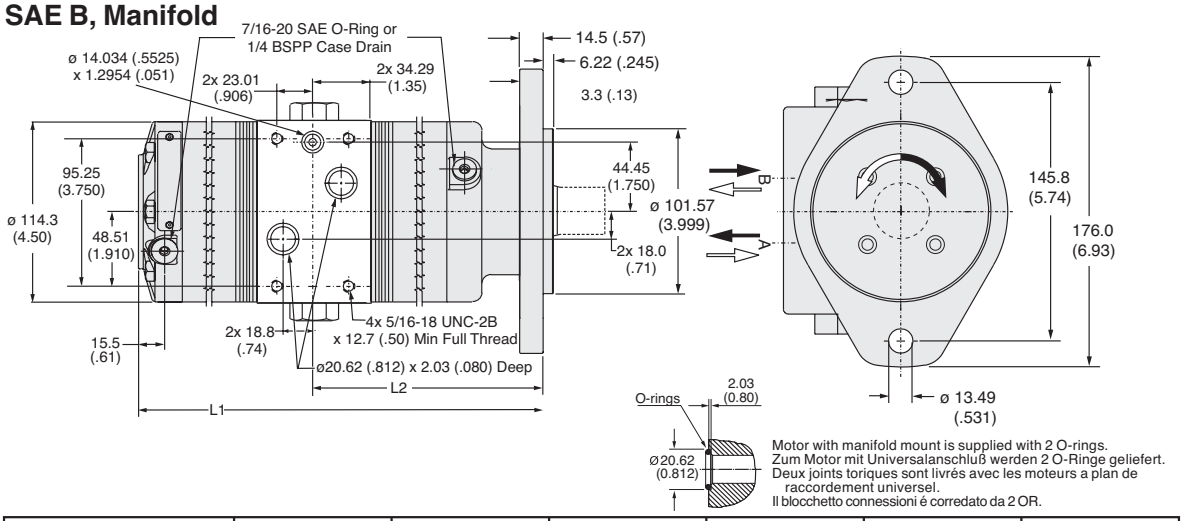

Motor with manifold mount is supplied with 2 O-rings.
Zum Motor mit Universalanschluß werden 2 O-Ringe geliefert.
Deux joints toriques sont livrés avec les moteurs a plan de raccordement universel.
Il blocchetto connessioni é corredato da 2 OR.

Code BM		072	108	142	176	212	258
Weight/Gewicht	**kg**	**15.9**	**16.1**	**16.2**	**16.4**	**16.6**	**16.8**
Poids/Peso	(lb)	(35.0)	(35.4)	(35.7)	(36.1)	(36.5)	(37.0)
Length	**"L1" mm**	**214.6**	**224.3**	**233.7**	**243.3**	**253.2**	**266.0**
	"L1" (in)	(8.45)	(8.83)	(9.20)	(9.58)	(9.97)	(10.47)
	"L2" mm	**123.2**	**128.0**	**132.9**	**137.7**	**142.5**	**148.8**
	"L2" (in)	(4.85)	(5.04)	(5.23)	(5.42)	(5.61)	(5.86)

Code: BS
SAE B, 7/8"-14 SAE

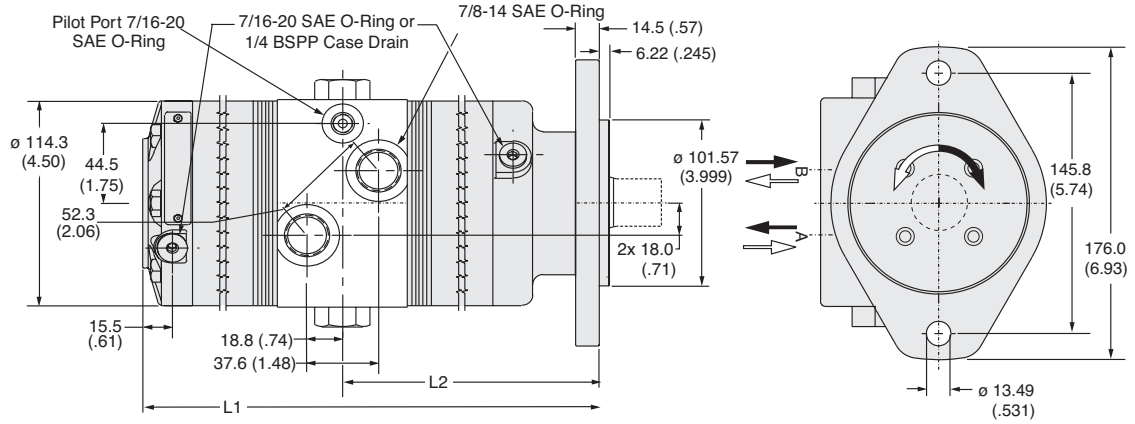

Code BS		072	108	142	176	212	258
Weight/Gewicht	**kg**	**15.9**	**16.1**	**16.2**	**16.4**	**16.6**	**16.8**
Poids/Peso	(lb)	(35.0)	(35.4)	(35.7)	(36.1)	(36.5)	(37.0)
Length	**"L1" mm**	**214.6**	**224.3**	**233.7**	**243.3**	**253.2**	**266.0**
	"L1" (in)	(8.45)	(8.83)	(9.20)	(9.58)	(9.97)	(10.47)
	"L2" mm	**123.2**	**128.0**	**132.9**	**137.7**	**142.5**	**148.8**
	"L2" (in)	(4.85)	(5.04)	(5.23)	(5.42)	(5.61)	(5.86)

English equivalents for metric specifications are shown in ( ).

WARNING
This product can expose you to chemicals including lead and DEHP, which are known to the State of California to cause cancer, and birth defects or other reproductive harm. For more information go to www.p65warnings.ca.gov

Tel: +45 63 12 83 00 | Email: ps@hymatik.com | www.hymatik.com | Hvidkaervej 27a, DK-5250 Odense SV, Denmark

Code: P
Remotely Piloted

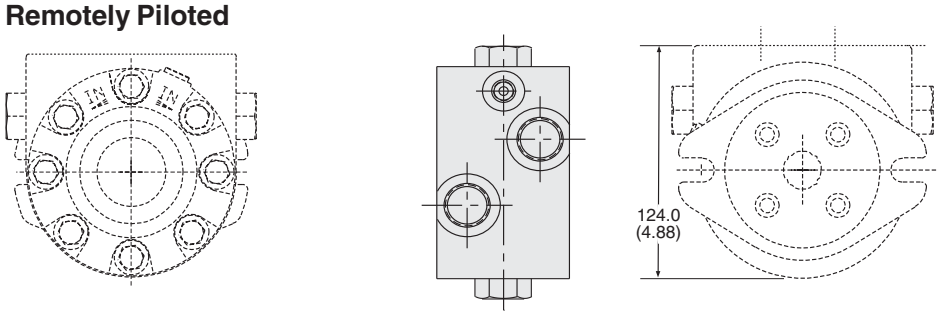

Code: E, W
Solenoid Actuated

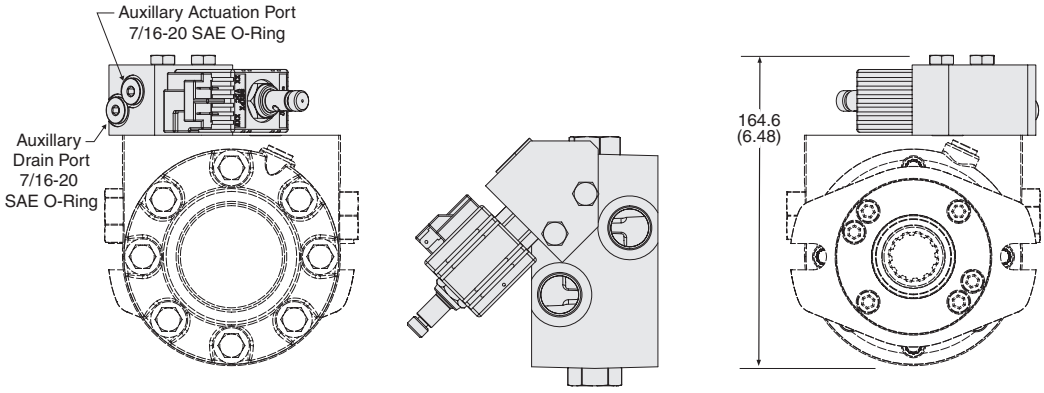

High Speed Series Mode

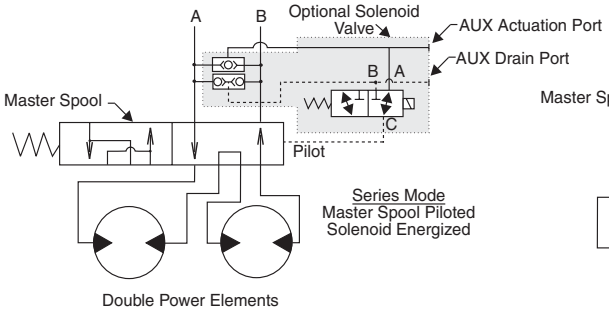

High Torque Parallel Mode

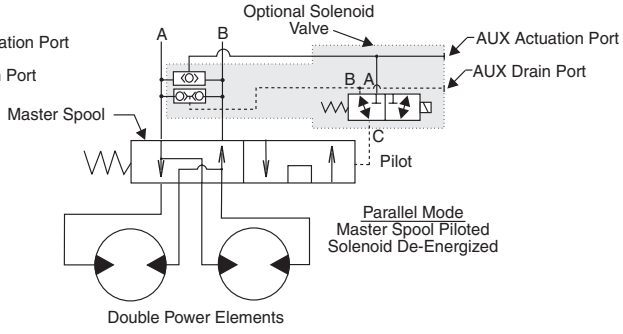

Add .5 kg (1.1 lb) for this option.

English equivalents for metric specifications are shown in ( ).

⚠ WARNING
This product can expose you to chemicals including lead and DEHP, which are known to the State of California to cause cancer, and birth defects or other reproductive harm. For more information go to www.p65warnings.ca.gov

Tel: +45 63 12 83 00 | Email: ps@hymatik.com | www.hymatik.com | Hvidkaervej 27a, DK-5250 Odense SV, Denmark

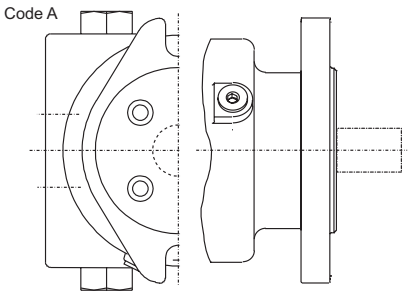

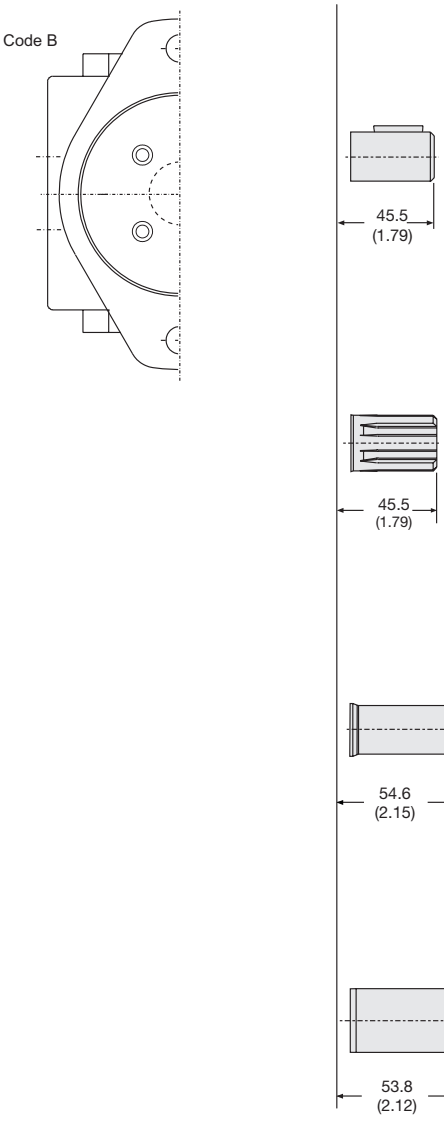

Code: 0

1" Keyed

Code: 1

1" 6B Spline

Code: 2

25mm Keyed

Code: 3

1-1/4" Keyed

English equivalents for metric specifications are shown in ( ).

022 700.indd, a

WARNING
This product can expose you to chemicals including lead and DEHP, which are known to the State of California to cause cancer, and birth defects or other reproductive harm. For more information go to www.p65warnings.ca.gov

Tel: +45 63 12 83 00 | Email: ps@hymatik.com | www.hymatik.com | Hvidkaervej 27a, DK-5250 Odense SV, Denmark

Code: 0

1” Keyed

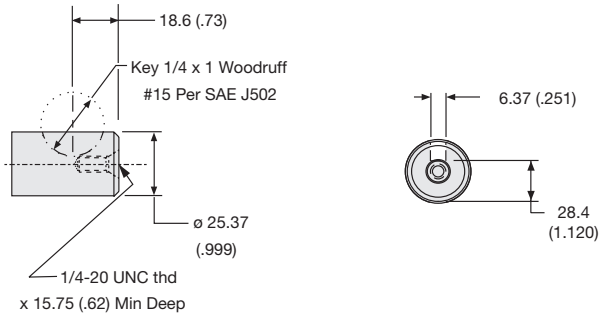

Code: 1

1" 6B Spline

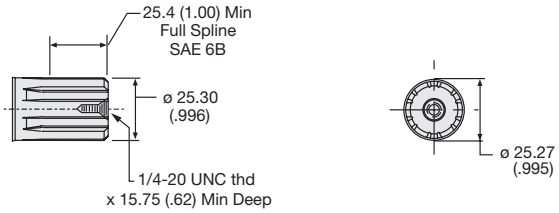

Code: 2

25mm Keyed

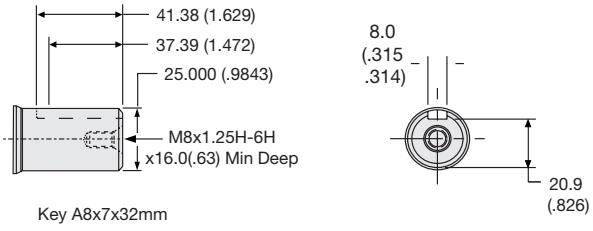

Code: 3

1-1/4" Keyed

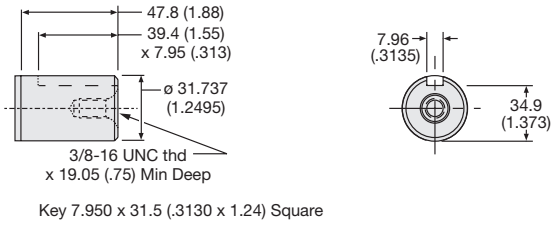

English equivalents for metric specifications are shown in ( ).

WARNING
This product can expose you to chemicals including lead and DEHP, which are known to the State of California to cause cancer, and birth defects or other reproductive harm. For more information go to www.p65warnings.ca.gov

Tel: +45 63 12 83 00 | Email: ps@hymatik.com | www.hymatik.com | Hvidkaervej 27a, DK-5250 Odense SV, Denmark

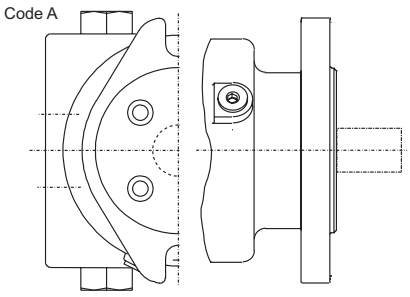

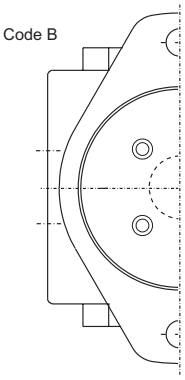

Code: 5

1-1/4"-14 Tooth Spline

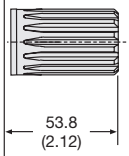

Code: 6

7/8"-13 Tooth Spline

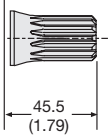

English equivalents for metric specifications are shown in ( ).

WARNING
This product can expose you to chemicals including lead and DEHP, which are known to the State of California to cause cancer, and birth defects or other reproductive harm. For more information go to www.p65warnings.ca.gov

Parker Hannifin Corporation
Pump & Motor Division
Greeneville, Tennessee, USA

Tel: +45 63 12 83 00 | Email: ps@hymatik.com | www.hymatik.com | Hvidkaervej 27a, DK-5250 Odense SV, Denmark

Code: 5

1-1/4"-14 Tooth Spline

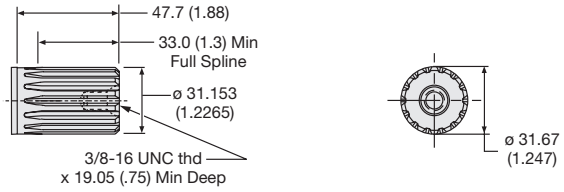

Code: 6

7/8"-13 Tooth Spline

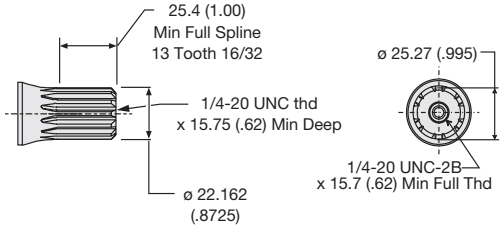

English equivalents for metric specifications are shown in ( ).

WARNING
This product can expose you to chemicals including lead and DEHP, which are known to the State of California to cause cancer, and birth defects or other reproductive harm. For more information go to www.p65warnings.ca.gov

Tel: +45 63 12 83 00 | Email: ps@hymatik.com | www.hymatik.com | Hvidkaervej 27a, DK-5250 Odense SV, Denmark

Technical Information /Technische Information / Segni / Informacion Tecnica

LSHT Torqmotors™ and Nichols™ Motors
716 Series / Serie / Série HY13-1590-011/US,EU

6 Displacements	**Series**	(3.6 – 12.9 in³/rev)
6 Schluckvolumen		**59…211 cm³/rev**
6 Cylindrée	**Parallel**	(7.2 – 25.8 in³/rev)
6 Despazamientos		**118…423 cm³/rev**

		Cont	Int
Maximum Pressure	**Series**	(2500 psid)	(3000 psid)
Eingangsdruck		**…170 bar**	**…210 bar**
Pression entrée	**Parallel**	(2000 psid)	(2500 psid)
Presion Maxima		**…140 bar**	**…170 bar**

Maximum Oil Flow	**Series**	(20 gpm)
Schluckstrom		**…76 lpm**
Débit d'huile	**Parallel**	(30 gpm)
Caudal Maximo de Aceite		**…114 lpm**

Maximum Speed	**Series**	**890 rpm**
Drehzahl	**Parallel**	**782 rpm**
Vitesse de rotation		
Velocidad Maxima		

		Cont	Int
Maximum Torque	**Series**	(3125 lb in)	(3844 lb in)
Max Drehmoment		**…353 Nm**	**…434 Nm**
Couple	**Parallel**	(3735 lb in)	(4666 lb in)
Torque Maximo		**…422 Nm**	**…527 Nm**

Maximum Side Load at Key	**Series**	(1000 lb)
		… 113 N
Seitenlast		
Charges latèrales		
Carga Maxima Lateral		

High Efficiency, High Flow Two-Speed Motor

Parker's unique two-speed motor utilizes two separate IGR™ power elements on a common shaft. An integral selector valve shifts between high torque, low speed (parallel) operation and high speed, low torque (series) mode in a ration of 2:1. The use of two power elements eliminates the deficiencies of traditional, single power element designs. In the high torque mode, the motor delivers twice the torque and half the speed that it does in the high speed mode. The selector valve can be open or closed center and may be actuated by an external pilot or optional solenoid valve. The open center selector valve can be shifted "on the fly" while the motor shaft is rotating under load. The selector valve is spring loaded to return to its pilot-pressure-off position. Normal mode of operation is field changeable and can be selected as series or parallel. Pilot pressure must be 300 psi higher than motor case or outlet pressure and may be as high as typical hydraulic system operating pressure.

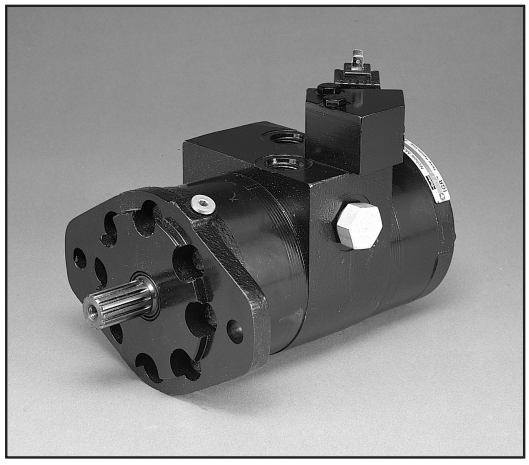

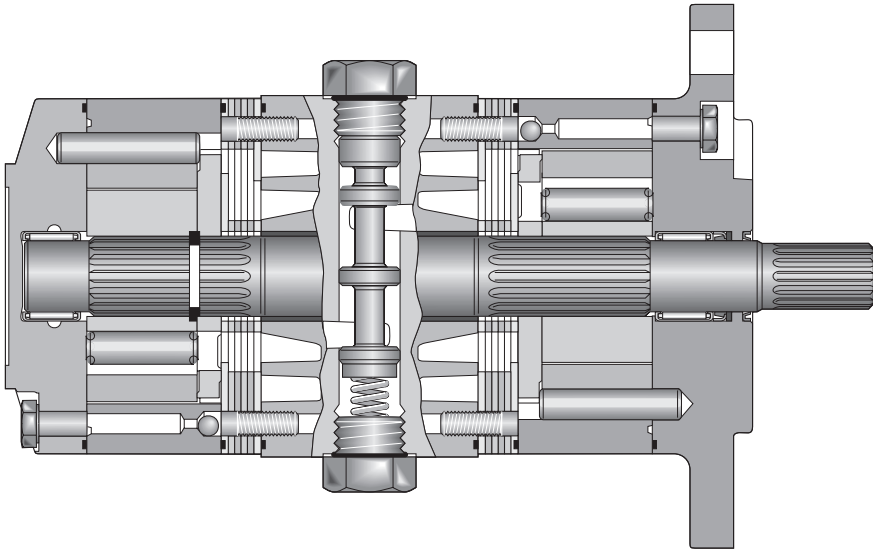

WARNING
This product can expose you to chemicals including lead and DEHP, which are known to the State of California to cause cancer, and birth defects or other reproductive harm. For more information go to www.p65warnings.ca.gov

Parker Hannifin Corporation
Pump & Motor Division
Greeneville, Tennessee, USA

Tel: +45 63 12 83 00 | Email: ps@hymatik.com | www.hymatik.com | Hvidkaervej 27a, DK-5250 Odense SV, Denmark

Ordering Information / Bestellschlüssel
System de Commande / Imformacion para pedidos

LSHT Torqmotors™ and Nichols™ Motors
716 Series / Serie / Série HY13-1590-011/US,EU

7	1	6	-	XXX	-	B	X	-	X	-
Series	Series	Shaft Welle Arbre Ejes		Displacement Schluckvolumen Cylindrée Desplazamiento		Mounting Gehäuse Carter Montaje	Ports Anschluß Plan de raccordement Lumbreras		Thru-Shaft durchgehende Welle arbre traversant Eje pasante	

Code	
6	7/8"-13 Tooth Spline 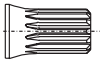

Code	cm³/U cm³/tr cm³/giro	in³/rev
072	60 /	3.6 Series
	119 /	7.2 Parallel
108	88 /	5.4 Series
	176 /	10.8 Parallel
142	116 /	71.1 Series
	232 /	14.2 Parallel
176	144 /	8.8 Series
	289 /	17.6 Parallel
212	174 /	10.6 Series
	348 /	21.2 Parallel
258	211 /	12.9 Series
	423 /	25.8 Parallel

Code	
S	7/8"-14 SAE 
M	Manifold 

Code	
B	SAE B 2-Bolt 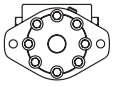

Code	
0	No Thru Shaft
1	Thru Shaft
E	Encoder Mount

Consult factory for other available options, configurations ordering codes and lead times.

⚠ **WARNING**
This product can expose you to chemicals including lead and DEHP, which are known to the State of California to cause cancer, and birth defects or other reproductive harm. For more information go to www.p65warnings.ca.gov

Tel: +45 63 12 83 00 | Email: ps@hymatik.com | www.hymatik.com | Hvidkaervej 27a, DK-5250 Odense SV, Denmark

Ordering Information / Bestellschlüssel
System de Commande / Imformacion para pedidos

LSHT Torqmotors™ and Nichols™ Motors
716 Series / Serie / Série
HY13-1590-011/US,EU

X	X	X	-	X	X
Spool Actuation Spulenbetätigung Actionnement de la bobine Actuado por bobina	Normal Center Position [1] Normale Mittenposition Position centrale normale Posición central normal	Normal Mode of Operation [4] Normaler Betriebsmodus Mode opératoire normal Modo normal de operación		Paint Anstrich Peinture Pintura	Voltage Spannung Tension Voltaje

Code	
P	Remotely Piloted 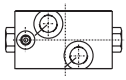
E[1]	Solenoid Actuated with Manual Override 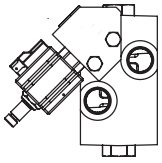
W[1]	Solenoid Actuated without Manual Override 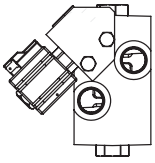

Standard Solenoid is 12V DC with 1/4" Spade Connections.
Standardausführung ist ein 12-V-Gleichstrom-Solenoid mit 1/4-Zoll-Gabelschuhanschlüssen.
Le solénoïde standardisé est du type 12 Vcc avec cosses à fourche de 1/4".
La solenoide estándar es para 12 VCC, con conectores tipo bayoneta de 1/4".

Code	
L	Parallel
R	Series

Code	
O	Open
C	Closed

Code	
Omit	No Paint
F	Black Paint Schwarz lackiert

Code	
Omit	12V DC
31	120V AC

Consult factory for other available options, configurations ordering codes and lead times.

Performance Data / Leistungsdaten
Puissance / Datos Tecnicos

LSHT Torqmotors™ and Nichols™ Motors
716 Series / Serie / Série HY13-1590-011/US,EU

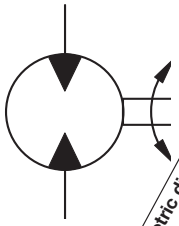

Motor Series 700	Geometric displacement cm³/rev in³/rev	Max. speed @ Max. intermittent flow Max. Drehzahl Intermittierender Betrieb: Vitesse de rotation maxi Velocidad maxima a caudal intermitente maximo int rev/min	Max. oil flow Max. Schluckstrom Débit d'huile maxi Portata max cont / int l/min g/min		Max. differential pressure Max. Druckgefälle Chute de pression maxi Presion diferencial maxima cont / int bar psid		Max. supply pressure Max. Eingangsdruck Pression maxi entrée Presion maxima de alimentacion max bar psig	Max. torque Max. Drehmoment Couple maxi Torque Maximo cont / int Nm lb-in		Max. performance Max. Leistungabgabe Puissance de sortie maxi Maximo rendimento max KW HP
072 Series	**59** 3.6	898	**42** 11	**53** 14	**241** 3500	**241** 3500	**276** 4000	**181** 1606	**181** 1606	**13.6** 18.3
072 Parallel	**118** 7.2	962	**95** 25	**114** 30	**207** 3000	**241** 3500	**276** 4000	**296** 2620	**335** 2968	**17.2** 23.1
108 Series	**88** 5.4	940	**61** 16	**83** 22	**241** 3500	**241** 3500	**276** 4000	**278** 2463	**278** 2463	**15.7** 21.1
108 Parallel	**177** 10.8	641	**114** 30	**114** 30	**207** 3000	**241** 3500	**276** 4000	**454** 4022	**521** 4614	**16.9** 22.6
142 Series	**116** 7.1	716	**76** 20	**83** 22	**241** 3500	**241** 3500	**276** 4000	**373** 3298	**373** 3298	**19.0** 25.5
142 Parallel	**233** 14.2	488	**114** 30	**114** 30	**207** 3000	**224** 3250	**276** 4000	**594** 5261	**624** 5523	**13.4** 18.0
176 Series	**144** 8.8	786	**76** 20	**114** 30	**241** 3500	**241** 3500	**276** 4000	**470** 4162	**470** 4162	**14.4** 19.3
176 Parallel	**288** 17.6	393	**114** 30	**114** 30	**172** 2500	**190** 2750	**276** 4000	**684** 6050	**738** 6532	**11.8** 15.8
212 Series	**174** 10.6	653	**76** 20	**114** 30	**224** 3250	**224** 3250	**276** 4000	**531** 4702	**531** 4702	**11.8** 15.8
212 Parallel	**347** 21.2	327	**114** 30	**114** 30	**155** 2250	**172** 2500	**276** 4000	**737** 6520	**812** 7187	**8.9** 11.9
258 Series	**211** 12.9	537	**68** 18	**114** 30	**172** 2500	**207** 3000	**276** 4000	**502** 4440	**601** 5318	**9.5** 12.8
258 Parallel	**423** 25.8	268	**114** 30	**114** 30	**138** 2000	**155** 2250	**276** 4000	**798** 7063	**887** 7853	**8.2** 11.0

Performance data based on tests using 15W40 oil with a viscosity of 55 cSt (215 SUS) at 54° C (130° F.) Performance data is typical. Actual data may vary slightly from one production motor to another.

Les donnees sur les performances sont basees sur des tests utilisant de l'huile 15W40 d'une viscosite de 55 cSt (215 SUS) a 54°C (130°F). Ces donnees correspondent a des situations typiques. Les donnees reelles peuvent varier legerement d'un moteur de production a l'autre.

Leistugsdaten sind gemessen mit SAE 15W40 bei einer Viskositaet von 43,1 Cst beo 54°C. Geringfuegige Abweichungen von den Katalogerten sond moeglich.

Datos tecnicos obtenidos con aceite 15W40 de 55 cSt (215 SUS) de viscosidad a 54°C (130°F). Los datos proporcionados son valores tipcos. Los valores exactos reales podrian tener una pequena variacion entre distintos motores.

∗Intermittent operation rating applies to 10% of every minute.
Intermittierende Werte maximal 10% von jeder Betriebsminute.
Fonctionnement interm. 10% max. de chaque minute d`utilisation.
Capacidad de funcionamiento intermitente valida para 10% por cada minuto.

WARNING
This product can expose you to chemicals including lead and DEHP, which are known to the State of California to cause cancer, and birth defects or other reproductive harm. For more information go to www.p65warnings.ca.gov

Tel: +45 63 12 83 00 | Email: ps@hymatik.com | www.hymatik.com | Hvidkaervej 27a, DK-5250 Odense SV, Denmark

072 Series

3.6 cu in / rev

PRESSURE (PSID)

FLOW (GPM)	500	1000	1500	2000	2500	3000	3500
2	242 **128**	481 **127**	718 **119**	941 **107**	1143 **88**	1313 **70**	
4	240 **257**	476 **256**	695 **255**	961 **239**	1193 **219**	1399 **194**	1574 **157**
6	217 **385**	449 **384**	697 **382**	947 **378**	1189 **357**	1420 **329**	1606 **289**
8	187 **513**	421 **512**	670 **513**	910 **511**	1155 **492**	1384 **467**	1610 **418**
10	139 **642**	372 **640**	618 **641**	867 **638**	1116 **628**	1361 **599**	1534 **553**
12	74 **770**	307 **770**	553 **768**	818 **768**	1056 **756**	1275 **708**	1496 **671**
14		240 **898**	486 **898**	754 **897**	994 **882**	1191 **847**	1448 **798**

TORQUE (LB IN) 994
SPEED (RPM) **882**

■ Cont. □ Int.

Intermittent operation rating applies to 10% of every minute.

Fonctionnement interm. 10% max. de chaque minute d'utilisation.

Performance data based on tests using 15W40 oil with a viscosity of 55 cSt (215 SUS) at 54° C (130° F.) Performance data is typical. Actual data may vary slightly from one production motor to another.

Les donnees sur les performances sont basees sur des tests utilisant de l'huile 15W40 d'une viscosite de 55 cSt (215 SUS) a 54°C (130°F). Ces donnees correspondent a des situations typiques. Les donnees reelles peuvent varier legerement d'un moteur de production a l'autre.

Intermittierende Werte maximal 10% von jeder Betriebsminute.

Capacidad de funcionamiento intermitente valida para 10% por cada minuto.

Leistugsdaten sind gemessen mit SAE 15W40 bei einer Viskositaet von 43,1 Cst beo 54°C. Geringfuegige Abweichungen von den Katalogerten sond moeglich.

Datos tecnicos obtenidos con aceite 15W40 de 55 cSt (215 SUS) de viscosidad a 54°C (130°F). Los datos proporcionados son valores tipcos. Los valores exactos reales podrian tener una pequena variacion entre distintos motores.

WARNING
This product can expose you to chemicals including lead and DEHP, which are known to the State of California to cause cancer, and birth defects or other reproductive harm. For more information go to www.p65warnings.ca.gov

Tel: +45 63 12 83 00 | Email: ps@hymatik.com | www.hymatik.com | Hvidkaervej 27a, DK-5250 Odense SV, Denmark

072 Parallel

7.2 cu in / rev

PRESSURE (PSID)

FLOW (GPM)	500	1000	1500	2000	2500	3000	3500
2	441 **63**	889 **59**	1272 **48**	1650 **29**			
4	481 **128**	966 **125**	1403 **121**	1824 **104**	2163 **81**		
6	477 **192**	957 **187**	1401 **181**	1813 **159**	2186 **121**	2485 **67**	
8	464 **257**	964 **251**	1428 **244**	1850 **212**	2249 **161**	2578 **90**	
10	437 **321**	941 **320**	1427 **316**	1836 **283**	2243 **240**	2620 **178**	2968 **115**
12	419 **385**	913 **382**	1401 **377**	1833 **353**	2229 **309**	2589 **249**	2960 **174**
14	405 **449**	881 **448**	1384 **444**	1824 **420**	2220 **372**	2582 **300**	2952 **235**
16	395 **513**	858 **510**	1363 **503**	1801 **485**	2192 **438**	2571 **356**	2940 **280**
18	381 **577**	821 **576**	1327 **573**	1769 **553**	2183 **495**	2520 **414**	2931 **334**
20	369 **642**	799 **642**	1308 **641**	1772 **616**	2146 **578**	2513 **507**	2904 **405**
22	350 **706**	779 **706**	1272 **705**	1742 **678**	2114 **608**	2503 **534**	2884 **452**
25		710 **802**	1169 **801**	1604 **770**	1997 **691**	2314 **606**	2647 **513**
30		653 **962**	1066 **962**	1444 **924**	1776 **830**	2097 **728**	2366 **616**

TORQUE (LB IN) 2647
SPEED (RPM) **513**

■ Cont. □ Int.

Intermittent operation rating applies to 10% of every minute.

Fonctionnement interm. 10% max. de chaque minute d'utilisation.

Performance data based on tests using 15W40 oil with a viscosity of 55 cSt (215 SUS) at 54° C (130° F.) Performance data is typical. Actual data may vary slightly from one production motor to another.

Les donnees sur les performances sont basees sur des tests utilisant de l'huile 15W40 d'une viscosite de 55 cSt (215 SUS) a 54°C (130°F). Ces donnees correspondent a des situations typiques. Les donnees reelles peuvent varier legerement d'un moteur de production a l'autre.

Intermittierende Werte maximal 10% von jeder Betriebsminute.

Capacidad de funcionamiento intermitente valida para 10% por cada minuto.

Leistugsdaten sind gemessen mit SAE 15W40 bei einer Viskositaet von 43,1 Cst beo 54°C. Geringfuegige Abweichungen von den Katalogerten sond moeglich.

Datos tecnicos obtenidos con aceite 15W40 de 55 cSt (215 SUS) de viscosidad a 54°C (130°F). Los datos proporcionados son valores tipcos. Los valores exactos reales podrian tener una pequena variacion entre distintos motores.

WARNING
This product can expose you to chemicals including lead and DEHP, which are known to the State of California to cause cancer, and birth defects or other reproductive harm. For more information go to www.p65warnings.ca.gov

Tel: +45 63 12 83 00 | Email: ps@hymatik.com | www.hymatik.com | Hvidkaervej 27a, DK-5250 Odense SV, Denmark

108 Series

5.4 cu in / rev

PRESSURE (PSID)

FLOW (GPM)	500	1000	1500	2000	2500	3000	3500
2	366 **86**	727 **84**	1084 **80**	1431 **74**	1740 **62**	2036 **52**	
4	361 **171**	725 **171**	1071 **170**	1462 **163**	1816 **150**	2122 **135**	2424 **110**
6	329 **257**	690 **256**	1066 **255**	1443 **252**	1812 **242**	2159 **224**	2455 **200**
8	289 **342**	654 **341**	1029 **342**	1395 **340**	1764 **330**	2118 **317**	2463 **288**
10	229 **428**	593 **427**	968 **427**	1337 **425**	1712 **419**	2078 **406**	2375 **379**
12	151 **513**	509 **513**	882 **512**	1271 **511**	1636 **505**	1979 **481**	2324 **459**
14	77 **599**	426 **599**	800 **598**	1194 **596**	1552 **588**	1874 **571**	2253 **547**
16	40 **684**	342 **684**	720 **683**	1133 **680**	1469 **671**	1790 **649**	2146 **656**
18		259 **769**	627 **769**	1031 **765**	1339 **755**	1642 **738**	1961 **731**
20			536 **855**	858 **850**	1139 **845**	1407 **817**	1678 **788**
22			452 **940**	775 **935**	1031 **930**	1277 **899**	1532 **867**

TORQUE (LB IN) 1678
SPEED (RPM) **788**

■ Cont. □ Int.

Intermittent operation rating applies to 10% of every minute.

Fonctionnement interm. 10% max. de chaque minute d'utilisation.

Performance data based on tests using 15W40 oil with a viscosity of 55 cSt (215 SUS) at 54° C (130° F.) Performance data is typical. Actual data may vary slightly from one production motor to another.

Les donnees sur les performances sont basees sur des tests utilisant de l'huile 15W40 d'une viscosite de 55 cSt (215 SUS) a 54°C (130°F). Ces donnees correspondent a des situations typiques. Les donnees reelles peuvent varier legerement d'un moteur de production a l'autre.

Intermittierende Werte maximal 10% von jeder Betriebsminute.

Capacidad de funcionamiento intermitente valida para 10% por cada minuto.

Leistugsdaten sind gemessen mit SAE 15W40 bei einer Viskositaet von 43,1 Cst beo 54°C. Geringfuegige Abweichungen von den Katalogerten sond moeglich.

Datos tecnicos obtenidos con aceite 15W40 de 55 cSt (215 SUS) de viscosidad a 54°C (130°F). Los datos proporcionados son valores tipcos. Los valores exactos reales podrian tener una pequena variacion entre distintos motores.

023 716.indd, a

WARNING
This product can expose you to chemicals including lead and DEHP, which are known to the State of California to cause cancer, and birth defects or other reproductive harm. For more information go to www.p65warnings.ca.gov

Tel: +45 63 12 83 00 | Email: ps@hymatik.com | www.hymatik.com | Hvidkaervej 27a, DK-5250 Odense SV, Denmark

108 Parallel

10.8 cu in / rev

PRESSURE (PSID)

FLOW (GPM)	500	1000	1500	2000	2500	3000	3500
2	683 **42**	1366 **40**	1970 **33**				
4	729 **85**	1455 **83**	2140 **78**	2809 **65**	3383 **47**		
6	728 **128**	1465 **124**	2150 **120**	2801 **105**	3399 **76**		
8	711 **171**	1469 **168**	2185 **163**	2856 **142**	3491 **110**		
10	678 **214**	1442 **213**	2182 **211**	2838 **189**	3482 **159**	4104 **77**	
12	651 **257**	1401 **254**	2150 **252**	2833 **235**	3456 **205**	4022 **109**	
14	630 **299**	1362 **298**	2104 **295**	2814 **280**	3445 **246**	4012 **131**	4614 **75**
16	611 **342**	1329 **340**	2095 **335**	2778 **323**	3408 **290**	3981 **226**	4598 **151**
18	587 **385**	1295 **383**	2051 **379**	2756 **368**	3364 **333**	3898 **267**	4519 **184**
20	565 **428**	1250 **426**	2013 **425**	2723 **411**	3335 **382**	3878 **317**	4482 **236**
22	539 **469**	1215 **469**	1962 **467**	2678 **452**	3295 **409**	3847 **338**	4451 **257**
25		1123 **534**	1834 **532**	2515 **513**	3108 **464**	3594 **385**	4309 **290**
30		1037 **641**	1693 **639**	2313 **615**	2828 **557**	3311 **462**	4151 **379**

TORQUE (LB IN) 4309
SPEED (RPM) **290**

■ Cont. □ Int.

Intermittent operation rating applies to 10% of every minute.

Fonctionnement interm. 10% max. de chaque minute d'utilisation.

Performance data based on tests using 15W40 oil with a viscosity of 55 cSt (215 SUS) at 54° C (130° F.) Performance data is typical. Actual data may vary slightly from one production motor to another.

Les donnees sur les performances sont basees sur des tests utilisant de l'huile 15W40 d'une viscosite de 55 cSt (215 SUS) a 54°C (130°F). Ces donnees correspondent a des situations typiques. Les donnees reelles peuvent varier legerement d'un moteur de production a l'autre.

Intermittierende Werte maximal 10% von jeder Betriebsminute.

Capacidad de funcionamiento intermitente valida para 10% por cada minuto.

Leistugsdaten sind gemessen mit SAE 15W40 bei einer Viskositaet von 43,1 Cst beo 54°C. Geringfuegige Abweichungen von den Katalogerten sond moeglich.

Datos tecnicos obtenidos con aceite 15W40 de 55 cSt (215 SUS) de viscosidad a 54°C (130°F). Los datos proporcionados son valores tipcos. Los valores exactos reales podrian tener una pequena variacion entre distintos motores.

WARNING
This product can expose you to chemicals including lead and DEHP, which are known to the State of California to cause cancer, and birth defects or other reproductive harm. For more information go to www.p65warnings.ca.gov

Tel: +45 63 12 83 00 | Email: ps@hymatik.com | www.hymatik.com | Hvidkaervej 27a, DK-5250 Odense SV, Denmark

142 Series

7.1 cu in / rev

PRESSURE (PSID)

FLOW (GPM)	500	1000	1500	2000	2500	3000	3500
2	484 **65**	964 **64**	1434 **62**	1907 **58**	2319 **50**	2759 **43**	
4	474 **130**	968 **130**	1444 **130**	1948 **126**	2410 **118**	2819 **107**	3264 **87**
6	438 **195**	930 **195**	1428 **194**	1926 **192**	2417 **1987**	2875 **174**	3285 **158**
8	391 **260**	889 **260**	1381 **260**	1870 **259**	2359 **253**	2838 **245**	3298 **226**
10	327 **325**	821 **324**	1324 **324**	1804 **323**	2298 **320**	2776 **313**	3215 **295**
12	249 **390**	728 **390**	1226 **390**	1725 **388**	2217 **385**	2664 **372**	3092 **358**
14	184 **455**	643 **455**	1141 **454**	1648 **452**	2116 **447**	2573 **439**	3063 **427**
16	101 **520**	532 **520**	1040 **519**	1558 **516**	2011 **511**	2474 **501**	2949 **497**
18		439 **585**	930 **584**	1441 **581**	1876 **575**	2325 **564**	2790 **559**
20		300 **651**	810 **650**	1275 **647**	1712 **643**	2125 **629**	2535 **612**
22		249 **716**	707 **715**	1169 **711**	1594 **707**	1983 **692**	2386 **673**

TORQUE (LB IN) 2535
SPEED (RPM) 612

☐ Cont. ☐ Int.

Intermittent operation rating applies to 10% of every minute.

Fonctionnement interm. 10% max. de chaque minute d'utilisation.

Performance data based on tests using 15W40 oil with a viscosity of 55 cSt (215 SUS) at 54° C (130° F.) Performance data is typical. Actual data may vary slightly from one production motor to another.

Les donnees sur les performances sont basees sur des tests utilisant de l'huile 15W40 d'une viscosite de 55 cSt (215 SUS) a 54°C (130°F). Ces donnees correspondent a des situations typiques. Les donnees reelles peuvent varier legerement d'un moteur de production a l'autre.

Intermittierende Werte maximal 10% von jeder Betriebsminute.

Capacidad de funcionamiento intermitente valida para 10% por cada minuto.

Leistugsdaten sind gemessen mit SAE 15W40 bei einer Viskositaet von 43,1 Cst beo 54°C. Geringfuegige Abweichungen von den Katalogerten sond moeglich.

Datos tecnicos obtenidos con aceite 15W40 de 55 cSt (215 SUS) de viscosidad a 54°C (130°F). Los datos proporcionados son valores tipcos. Los valores exactos reales podrian tener una pequena variacion entre distintos motores.

WARNING
This product can expose you to chemicals including lead and DEHP, which are known to the State of California to cause cancer, and birth defects or other reproductive harm. For more information go to www.p65warnings.ca.gov

Tel: +45 63 12 83 00 | Email: ps@hymatik.com | www.hymatik.com | Hvidkaervej 27a, DK-5250 Odense SV, Denmark

142 Parallel

14.2 cu in / rev

PRESSURE (PSID)

FLOW (GPM)	500	1000	1500	2000	2500	3000	3250
2	925 **32**	1836 **31**	2668 **26**	3467 **16**			
4	969 **65**	1920 **63**	2860 **57**	3784 **46**	4619 **31**		
6	971 **97**	1963 **94**	2886 **90**	3785 **79**	4619 **55**		
8	954 **130**	1962 **128**	2927 **125**	3858 **108**	4736 **85**		
10	918 **163**	1933 **162**	2921 **160**	3837 **145**	4724 **121**		
12	884 **195**	1882 **193**	2886 **191**	3829 **179**	4685 **164**		
14	857 **228**	1841 **226**	2831 **224**	3796 **212**	4672 **191**		
16	826 **260**	1799 **259**	2816 **255**	3747 **246**	4630 **219**	5261 **164**	
18	790 **293**	1754 **290**	2755 **286**	3703 **280**	4557 **246**	5207 **197**	5523 **164**
20	757 **325**	1709 **323**	2710 **322**	3661 **313**	4528 **273**	5166 **226**	5472 **198**
22	726 **356**	1655 **356**	2648 **353**	3603 **344**	4485 **301**	5099 **245**	5259 **211**
25	452 **406**	1547 **405**	2513 **403**	3441 **390**	4227 **342**	4861 **278**	5068 **239**
30	374 **488**	1436 **486**	2344 **484**	3225 **468**	3921 **410**	4577 **334**	4921 **294**

TORQUE (LB IN) 5068
SPEED (RPM) 239

☐ Cont. ☐ Int.

Intermittent operation rating applies to 10% of every minute.

Fonctionnement interm. 10% max. de chaque minute d'utilisation.

Performance data based on tests using 15W40 oil with a viscosity of 55 cSt (215 SUS) at 54° C (130° F.) Performance data is typical. Actual data may vary slightly from one production motor to another.

Les donnees sur les performances sont basees sur des tests utilisant de l'huile 15W40 d'une viscosite de 55 cSt (215 SUS) a 54°C (130°F). Ces donnees correspondent a des situations typiques. Les donnees reelles peuvent varier legerement d'un moteur de production a l'autre.

Intermittierende Werte maximal 10% von jeder Betriebsminute.

Capacidad de funcionamiento intermitente valida para 10% por cada minuto.

Leistugsdaten sind gemessen mit SAE 15W40 bei einer Viskositaet von 43,1 Cst beo 54°C. Geringfuegige Abweichungen von den Katalogerten sond moeglich.

Datos tecnicos obtenidos con aceite 15W40 de 55 cSt (215 SUS) de viscosidad a 54°C (130°F). Los datos proporcionados son valores tipcos. Los valores exactos reales podrian tener una pequena variacion entre distintos motores.

⚠ **WARNING**
This product can expose you to chemicals including lead and DEHP, which are known to the State of California to cause cancer, and birth defects or other reproductive harm. For more information go to www.p65warnings.ca.gov

Tel: +45 63 12 83 00 | Email: ps@hymatik.com | www.hymatik.com | Hvidkaervej 27a, DK-5250 Odense SV, Denmark

176 Series

8.8 cu in / rev

PRESSURE (PSID)

	500	1000	1500	2000	2500	3000	3500
2	604 **52**	1204 **52**	1788 **50**	2395 **49**	2913 **43**	3521 **38**	
4	588 **105**	1217 **105**	1834 **105**	2445 **104**	3022 **98**	3529 **90**	4142 **73**
6	548 **158**	1179 **157**	1803 **157**	2423 **155**	3039 **153**	3609 **143**	4142 **131**
8	497 **210**	1137 **209**	1748 **210**	2364 **208**	2973 **206**	3584 **201**	4162 **188**
10	436 **263**	1070 **262**	1704 **261**	2291 **260**	2906 **259**	3496 **256**	4098 **244**
12	371 **315**	976 **315**	1601 **315**	2204 **313**	2829 **311**	3441 **305**	4034 **295**
14	332 **367**	899 **367**	1525 **366**	2140 **363**	2717 **361**	3324 **358**	3922 **353**
16	186 **420**	762 **419**	1405 **418**	2017 **416**	2591 **413**	3214 **410**	3814 **400**
18		665 **472**	1284 **471**	1891 **468**	2468 **465**	3088 **462**	3721 **450**
20		553 **524**	1134 **524**	1762 **522**	2388 **519**	2975 **514**	3549 **503**
22		459 **576**	1017 **576**	1636 **574**	2272 **571**	2836 **565**	3417 **554**
25		81 **655**	721 **655**	1375 **652**	1968 **648**	2534 **637**	3113 **624**
30			284 **786**	958 **782**	1562 **778**	2097 **765**	2691 **749**

TORQUE (LB IN) 3549
SPEED (RPM) 503

FLOW (GPM)

■ Cont. □ Int.

Intermittent operation rating applies to 10% of every minute.

Fonctionnement interm. 10% max. de chaque minute d'utilisation.

Performance data based on tests using 15W40 oil with a viscosity of 55 cSt (215 SUS) at 54° C (130° F.) Performance data is typical. Actual data may vary slightly from one production motor to another.

Les donnees sur les performances sont basees sur des tests utilisant de l'huile 15W40 d'une viscosite de 55 cSt (215 SUS) a 54°C (130°F). Ces donnees correspondent a des situations typiques. Les donnees reelles peuvent varier legerement d'un moteur de production a l'autre.

Intermittierende Werte maximal 10% von jeder Betriebsminute.

Capacidad de funcionamiento intermitente valida para 10% por cada minuto.

Leistugsdaten sind gemessen mit SAE 15W40 bei einer Viskositaet von 43,1 Cst beo 54°C. Geringfuegige Abweichungen von den Katalogerten sond moeglich.

Datos tecnicos obtenidos con aceite 15W40 de 55 cSt (215 SUS) de viscosidad a 54°C (130°F). Los datos proporcionados son valores tipcos. Los valores exactos reales podrian tener una pequena variacion entre distintos motores.

WARNING
This product can expose you to chemicals including lead and DEHP, which are known to the State of California to cause cancer, and birth defects or other reproductive harm. For more information go to www.p65warnings.ca.gov

Tel: +45 63 12 83 00 | Email: ps@hymatik.com | www.hymatik.com | Hvidkaervej 27a, DK-5250 Odense SV, Denmark

176 Parallel

17.6 cu in / rev

PRESSURE (PSID)

FLOW (GPM)	500	1000	1500	2000	2250	2500	2750
2	1179 **26**	2325 **26**	3403 **22**				
4	1214 **52**	2412 **51**	3601 **44**	4801 **34**			
6	1221 **79**	2479 **75**	3651 **72**	4818 **64**	5338 **55**		
8	1206 **105**	2468 **104**	3693 **101**	4908 **88**	5483 **83**	6050 **70**	
10	1172 **131**	2443 **130**	3685 **129**	4885 **117**	5464 **108**	6036 **97**	6532 **93**
12	1130 **157**	2381 **156**	3651 **155**	4874 **144**	5420 **137**	5980 **125**	6394 **112**
14	1097 **184**	2345 **182**	3613 **180**	4824 **171**	5408 **164**	5966 **149**	6363 **130**
16	1052 **210**	2294 **209**	3567 **206**	4762 **198**	5345 **189**	5924 **175**	6317 **149**
18	1003 **236**	2238 **233**	3487 **229**	4689 **226**	5275 **216**	5812 **208**	6255 **184**
20	955 **262**	2199 **260**	3437 **258**	4639 **253**	5231 **240**	5791 **231**	6209 **205**
22	922 **286**	2123 **286**	3366 **283**	4566 **277**	5200 **264**	5749 **254**	6147 **225**
25	832 **328**	2006 **326**	3240 **324**	4431 **314**	4954 **302**	5413 **289**	5816 **256**
30	689 **393**	1868 **392**	3050 **389**	4224 **377**	4651 **362**	5112 **347**	5546 **307**

TORQUE (LB IN) 5816
SPEED (RPM) **256**

■ Cont. □ Int.

Intermittent operation rating applies to 10% of every minute.

Fonctionnement interm. 10% max. de chaque minute d'utilisation.

Performance data based on tests using 15W40 oil with a viscosity of 55 cSt (215 SUS) at 54° C (130° F.) Performance data is typical. Actual data may vary slightly from one production motor to another.

Les donnees sur les performances sont basees sur des tests utilisant de l'huile 15W40 d'une viscosite de 55 cSt (215 SUS) a 54°C (130°F). Ces donnees correspondent a des situations typiques. Les donnees reelles peuvent varier legerement d'un moteur de production a l'autre.

Intermittierende Werte maximal 10% von jeder Betriebsminute.

Capacidad de funcionamiento intermitente valida para 10% por cada minuto.

Leistugsdaten sind gemessen mit SAE 15W40 bei einer Viskositaet von 43,1 Cst beo 54°C. Geringfuegige Abweichungen von den Katalogerten sond moeglich.

Datos tecnicos obtenidos con aceite 15W40 de 55 cSt (215 SUS) de viscosidad a 54°C (130°F). Los datos proporcionados son valores tipcos. Los valores exactos reales podrian tener una pequena variacion entre distintos motores.

⚠ **WARNING**
This product can expose you to chemicals including lead and DEHP, which are known to the State of California to cause cancer, and birth defects or other reproductive harm. For more information go to www.p65warnings.ca.gov

Tel: +45 63 12 83 00 | Email: ps@hymatik.com | www.hymatik.com | Hvidkaervej 27a, DK-5250 Odense SV, Denmark

212 Series

10.6 cu in / rev

PRESSURE (PSID)

	500	1000	1500	1750	2000	2250	2500	2750	3000	3250
2	731 **44**	1458 **43**	2162 **42**	2509 **42**	2901 **40**	3175 **39**	3532 **36**			
4	712 **87**	1468 **87**	2210 **87**	2562 **87**	2946 **86**	3274 **84**	3641 **81**	3955 **80**	4269 **75**	4623 **71**
6	665 **131**	1426 **130**	2175 **130**	2553 **129**	2920 **128**	3290 **127**	3658 **127**	4009 **123**	4351 **119**	4702 **115**
8	603 **174**	1371 **174**	2110 **174**	2473 **173**	2854 **173**	3229 **171**	3587 **170**	3961 **170**	4323 **166**	4674 **161**
10	527 **218**	1287 **217**	2053 **217**	2406 **216**	2767 **215**	3136 **215**	3508 **214**	3872 **213**	4223 **212**	
12	450 **262**	1182 **261**	1935 **261**	2315 **260**	2665 **259**	3040 **258**	3414 **257**	3775 **256**	4150 **251**	
14	390 **305**	1089 **304**	1844 **303**	2210 **302**	2588 **301**	2940 **300**	3291 **299**	3667 **298**	3948 **293**	
16	225 **349**	929 **348**	1703 **347**	2076 **346**	2443 **346**	2789 **345**	3149 **343**	3526 **338**	3846 **335**	
18		806 **391**	1559 **391**	1921 **389**	2300 **389**	2672 **388**	2995 **384**	3340 **380**	3644 **377**	
20		669 **435**	1377 **435**	1769 **434**	2128 **433**	2498 **432**	2741 **427**	2992 **423**	3239 **418**	
22		567 **478**	1244 **478**	1612 **477**	1994 **476**	2337 **475**	2657 **470**	2876 **465**	3113 **460**	
25		153 **544**	900 **544**	1244 **543**	1676 **541**	2037 **540**	2404 **534**	2830 **528**	3037 **523**	
30			398 **653**	732 **651**	1183 **650**	1534 **648**	1898 **641**	2366 **641**	2531 **628**	

FLOW (GPM)

TORQUE (LB IN) 3113
SPEED (RPM) 460

■ Cont. □ Int.

Intermittent operation rating applies to 10% of every minute.

Fonctionnement interm. 10% max. de chaque minute d'utilisation.

Performance data based on tests using 15W40 oil with a viscosity of 55 cSt (215 SUS) at 54° C (130° F.) Performance data is typical. Actual data may vary slightly from one production motor to another.

Les donnees sur les performances sont basees sur des tests utilisant de l'huile 15W40 d'une viscosite de 55 cSt (215 SUS) a 54°C (130°F). Ces donnees correspondent a des situations typiques. Les donnees reelles peuvent varier legerement d'un moteur de production a l'autre.

Intermittierende Werte maximal 10% von jeder Betriebsminute.

Capacidad de funcionamiento intermitente valida para 10% por cada minuto.

Leistugsdaten sind gemessen mit SAE 15W40 bei einer Viskositaet von 43,1 Cst beo 54°C. Geringfuegige Abweichungen von den Katalogerten sond moeglich.

Datos tecnicos obtenidos con aceite 15W40 de 55 cSt (215 SUS) de viscosidad a 54°C (130°F). Los datos proporcionados son valores tipcos. Los valores exactos reales podrian tener una pequena variacion entre distintos motores.

WARNING
This product can expose you to chemicals including lead and DEHP, which are known to the State of California to cause cancer, and birth defects or other reproductive harm. For more information go to www.p65warnings.ca.gov

Parker Hannifin Corporation
Pump & Motor Division
Greeneville, Tennessee, USA

Tel: +45 63 12 83 00 | Email: ps@hymatik.com | www.hymatik.com | Hvidkaervej 27a, DK-5250 Odense SV, Denmark

212 Parallel

21.2 cu in / rev

PRESSURE (PSID)

FLOW (GPM)	500	1000	1250	1500	1750	2000	2250	2500
2	1413 **22**	2789 **21**	3434 **19**	4057 **18**	4676 **15**	5276 **11**		
4	1455 **44**	2874 **42**	3580 **39**	4299 **36**	5036 **34**	5719 **29**		
6	1471 **65**	2970 **63**	3686 **61**	4380 **60**	5047 **56**	5777 **52**	6388 **46**	
8	1455 **87**	2964 **86**	3698 **85**	4429 **84**	5163 **80**	5877 **73**	6498 **69**	7170 **47**
10	1413 **109**	2938 **108**	3678 **108**	4429 **107**	5135 **103**	5869 **98**	6520 **90**	7187 **65**
12	1366 **131**	2871 **129**	3627 **129**	4390 **128**	5112 **127**	5845 **120**	6492 **115**	7069 **105**
14	1326 **153**	2827 **151**	3542 **150**	4256 **149**	5052 **148**	5785 **143**	6476 **137**	6984 **122**
16	1269 **174**	2767 **173**	3522 **172**	4241 **171**	5005 **169**	5718 **165**	6400 **158**	6900 **139**
18	1215 **196**	2699 **194**	3445 **193**	4207 **191**	4948 **190**	5643 **188**	6326 **180**	6833 **157**
20	1158 **218**	2656 **216**	3393 **215**	4153 **213**	4898 **209**	5587 **210**	6210 **200**	6790 **174**
22	1114 **240**	2572 **238**	3297 **237**	4068 **236**	4806 **234**	5493 **230**	6226 **220**	6740 **192**
25	1004 **272**	2439 **271**	3165 **270**	3897 **269**	4659 **266**	5347 **261**	5982 **252**	6647 **218**
30	831 **327**	2299 **325**	2973 **324**	3690 **323**	4393 **319**	5093 **313**	5709 **302**	6267 **262**

TORQUE (LB IN) 6647
SPEED (RPM) 218

☐ Cont. ☐ Int.

Intermittent operation rating applies to 10% of every minute.

Fonctionnement interm. 10% max. de chaque minute d'utilisation.

Performance data based on tests using 15W40 oil with a viscosity of 55 cSt (215 SUS) at 54° C (130° F.) Performance data is typical. Actual data may vary slightly from one production motor to another.

Les donnees sur les performances sont basees sur des tests utilisant de l'huile 15W40 d'une viscosite de 55 cSt (215 SUS) a 54°C (130°F). Ces donnees correspondent a des situations typiques. Les donnees reelles peuvent varier legerement d'un moteur de production a l'autre.

Intermittierende Werte maximal 10% von jeder Betriebsminute.

Capacidad de funcionamiento intermitente valida para 10% por cada minuto.

Leistugsdaten sind gemessen mit SAE 15W40 bei einer Viskositaet von 43,1 Cst beo 54°C. Geringfuegige Abweichungen von den Katalogerten sond moeglich.

Datos tecnicos obtenidos con aceite 15W40 de 55 cSt (215 SUS) de viscosidad a 54°C (130°F). Los datos proporcionados son valores tipcos. Los valores exactos reales podrian tener una pequena variacion entre distintos motores.

WARNING
This product can expose you to chemicals including lead and DEHP, which are known to the State of California to cause cancer, and birth defects or other reproductive harm. For more information go to www.p65warnings.ca.gov

Parker Hannifin Corporation
Pump & Motor Division
Greeneville, Tennessee, USA

Tel: +45 63 12 83 00 | Email: ps@hymatik.com | www.hymatik.com | Hvidkaervej 27a, DK-5250 Odense SV, Denmark

258 Series

12.9 cu in / rev

PRESSURE (PSID)

FLOW (GPM)	500	1000	1500	1750	2000	2250	2500	2750	3000
2	905 **36**	1811 **36**	2673 **35**	3155 **35**	3613 **33**	3950 **33**	4414 **31**	4822 **30**	5226 **26**
4	882 **72**	1799 **72**	2692 **71**	3147 **71**	3585 **70**	4014 **69**	4440 **66**	4850 **65**	5287 **62**
6	834 **107**	1762 **107**	2645 **106**	3119 **106**	3560 **104**	4000 **104**	4440 **103**	4856 **101**	5318 **98**
8	757 **143**	1675 **143**	2593 **142**	3036 **141**	3507 **140**	3940 **139**	4399 **138**	4839 **137**	5292 **135**
10	652 **179**	1556 **178**	2504 **177**	2957 **176**	3400 **175**	3857 **174**	4306 **173**	4771 **172**	5201 **171**
12	565 **215**	1472 **213**	2390 **212**	2867 **210**	3289 **208**	3737 **208**	4188 **207**	4635 **207**	5072 **205**
14	423 **251**	1357 **249**	2279 **249**	2731 **248**	3199 **245**	3668 **243**	4096 **243**	4517 **241**	4957 **239**
16	278 **287**	1187 **286**	2125 **286**	2587 **285**	3043 **284**	3525 **283**	3973 **283**		
18		1006 **321**	1962 **321**	2440 **319**	2911 **319**	3349 **318**			
20		827 **357**	1728 **357**	2264 **356**	2620 **355**	3003 **354**			
22		758 **393**	1614 **393**	2037 **392**	2546 **390**	2975 **390**			
25		466 **446**	1260 **446**	1681 **446**	2135 **445**	2624 **443**			
30			773 **537**	1099 **536**	1585 **535**	2079 **534**			

TORQUE (LB IN) 1099
SPEED (RPM) **536**

■ Cont. □ Int.

Intermittent operation rating applies to 10% of every minute.

Fonctionnement interm. 10% max. de chaque minute d'utilisation.

Performance data based on tests using 15W40 oil with a viscosity of 55 cSt (215 SUS) at 54° C (130° F.) Performance data is typical. Actual data may vary slightly from one production motor to another.

Les donnees sur les performances sont basees sur des tests utilisant de l'huile 15W40 d'une viscosite de 55 cSt (215 SUS) a 54°C (130°F). Ces donnees correspondent a des situations typiques. Les donnees reelles peuvent varier legerement d'un moteur de production a l'autre.

Intermittierende Werte maximal 10% von jeder Betriebsminute.

Capacidad de funcionamiento intermitente valida para 10% por cada minuto.

Leistugsdaten sind gemessen mit SAE 15W40 bei einer Viskositaet von 43,1 Cst beo 54°C. Geringfuegige Abweichungen von den Katalogerten sond moeglich.

Datos tecnicos obtenidos con aceite 15W40 de 55 cSt (215 SUS) de viscosidad a 54°C (130°F). Los datos proporcionados son valores tipcos. Los valores exactos reales podrian tener una pequena variacion entre distintos motores.

⚠ **WARNING**
This product can expose you to chemicals including lead and DEHP, which are known to the State of California to cause cancer, and birth defects or other reproductive harm. For more information go to www.p65warnings.ca.gov

Tel: +45 63 12 83 00 | Email: ps@hymatik.com | www.hymatik.com | Hvidkaervej 27a, DK-5250 Odense SV, Denmark

258 Parallel

25.8 cu in / rev

PRESSURE (PSID)

FLOW (GPM)	500	1000	1250	1500	1750	2000	2250
2	1679 **18**	3334 **15**	4055 **14**	4724 **12**			
4	1731 **36**	3474 **34**	4224 **32**	5038 **30**	5979 **27**	6636 **25**	
6	1790 **54**	3531 **53**	4419 **51**	5235 **48**	6072 **45**	6898 **42**	7557 **38**
8	1782 **71**	3564 **71**	4435 **71**	5291 **68**	6115 **66**	6981 **60**	7715 **56**
10	1727 **89**	3552 **89**	4424 **88**	5340 **87**	6209 **84**	7063 **81**	7853 **76**
12	1684 **107**	3511 **107**	4424 **106**	5303 **104**	6187 **103**	6981 **100**	7715 **97**
14	1636 **125**	3457 **124**	4373 **124**	5279 **123**	6108 **123**	6915 **120**	7650 **118**
16	1556 **143**	3388 **143**	4312 **143**	5223 **142**	6050 **140**	6866 **138**	7594 **135**
18	1515 **161**	3301 **161**	4240 **160**	5149 **160**	6022 **159**	6841 **155**	7557 **151**
20	1445 **179**	3273 **179**	4193 **178**	5118 **178**	5979 **178**	6800 **172**	7502 **168**
22	1378 **197**	3203 **197**	4060 **196**	5020 **196**	5878 **195**	6652 **189**	7391 **185**
25	1234 **224**	3084 **224**	3998 **223**	4866 **222**	5763 **222**	6553 **215**	7354 **210**
30	1018 **268**	3043 **268**	3798 **267**	4570 **266**	5468 **266**	6225 **258**	6975 **252**

TORQUE (LB IN) 7354
SPEED (RPM) 210

☐ Cont. ☐ Int.

Intermittent operation rating applies to 10% of every minute.

Fonctionnement interm. 10% max. de chaque minute d'utilisation.

Performance data based on tests using 15W40 oil with a viscosity of 55 cSt (215 SUS) at 54° C (130° F.) Performance data is typical. Actual data may vary slightly from one production motor to another.

Les donnees sur les performances sont basees sur des tests utilisant de l'huile 15W40 d'une viscosite de 55 cSt (215 SUS) a 54°C (130°F). Ces donnees correspondent a des situations typiques. Les donnees reelles peuvent varier legerement d'un moteur de production a l'autre.

Intermittierende Werte maximal 10% von jeder Betriebsminute.

Capacidad de funcionamiento intermitente valida para 10% por cada minuto.

Leistugsdaten sind gemessen mit SAE 15W40 bei einer Viskositaet von 43,1 Cst beo 54°C. Geringfuegige Abweichungen von den Katalogerten sond moeglich.

Datos tecnicos obtenidos con aceite 15W40 de 55 cSt (215 SUS) de viscosidad a 54°C (130°F). Los datos proporcionados son valores tipcos. Los valores exactos reales podrian tener una pequena variacion entre distintos motores.

WARNING
This product can expose you to chemicals including lead and DEHP, which are known to the State of California to cause cancer, and birth defects or other reproductive harm. For more information go to www.p65warnings.ca.gov

Tel: +45 63 12 83 00 | Email: ps@hymatik.com | www.hymatik.com | Hvidkaervej 27a, DK-5250 Odense SV, Denmark

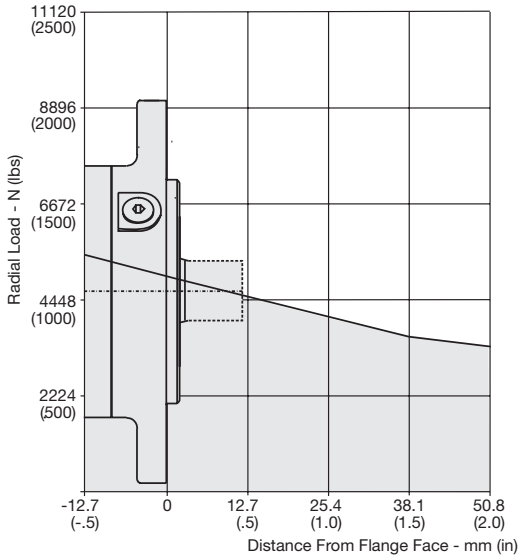

The allowable side load curve is based on a L_{10} bearing life of 2.5 x 10^6 revolutions.
Die zulassige radiale Wellenbelastung bezieht sich auf die Lager-Lebensdauer 2.5 x 10^6 Umdrehungen.
L'effort radial admissible sur l'arbre depend a une duree de vie 2.5 x 10^6 de rotation.
La curva de carga lateral admisible se basa en vida util de cojinete de 2.5 x 10^6 revoluciones.

Bearing Life Factor Curve
Chart B

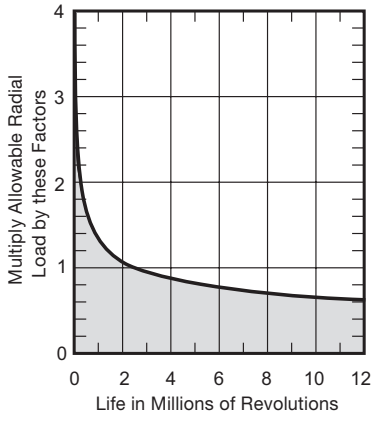

Note:
Side load should be considered a vector sum of all imposed loads.

English equivalents for metric specifications are shown in ( ).

WARNING
This product can expose you to chemicals including lead and DEHP, which are known to the State of California to cause cancer, and birth defects or other reproductive harm. For more information go to www.p65warnings.ca.gov

Tel: +45 63 12 83 00 | Email: ps@hymatik.com | www.hymatik.com | Hvidkaervej 27a, DK-5250 Odense SV, Denmark

Code: BS

SAE B, 7/8"-14 SAE

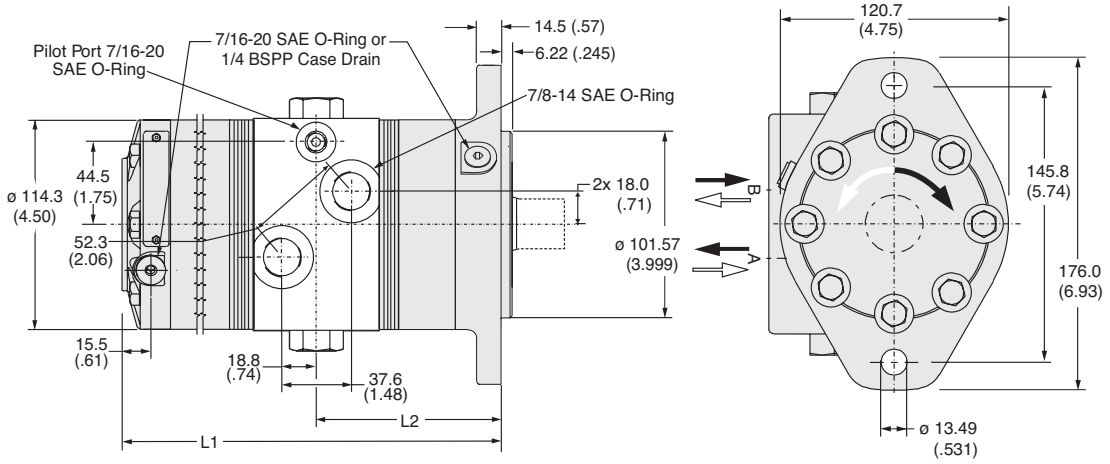

Code BS		072	108	142	176	212	258
Weight/Gewicht	**kg**	**14.8**	**15.2**	**15.4**	**15.6**	**15.7**	**15.9**
Poids/Peso	(lb)	(32.7)	(33.6)	(33.9)	(34.3)	(34.7)	(35.2)
Length	**"L1" mm**	**182.6**	**192.3**	**201.7**	**211.3**	**221.2**	**234.0**
	"L1" (in)	(7.18)	(7.57)	(7.94)	(8.32)	(8.71)	(9.21)
	"L2" mm	**91.4**	**96.3**	**101.8**	**105.7**	**110.7**	**117.1**
	"L2" (in)	(3.60)	(3.79)	(3.97)	(4.16)	(4.36)	(4.61)

English equivalents for metric specifications are shown in ( ).

WARNING
This product can expose you to chemicals including lead and DEHP, which are known to the State of California to cause cancer, and birth defects or other reproductive harm. For more information go to www.p65warnings.ca.gov

Tel: +45 63 12 83 00 | Email: ps@hymatik.com | www.hymatik.com | Hvidkaervej 27a, DK-5250 Odense SV, Denmark

Code: P

Remotely Piloted

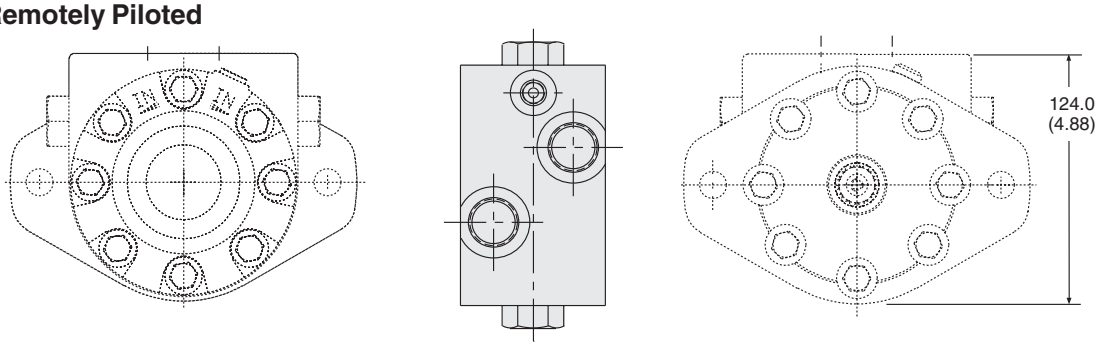

Code: E, W

Solenoid Actuated

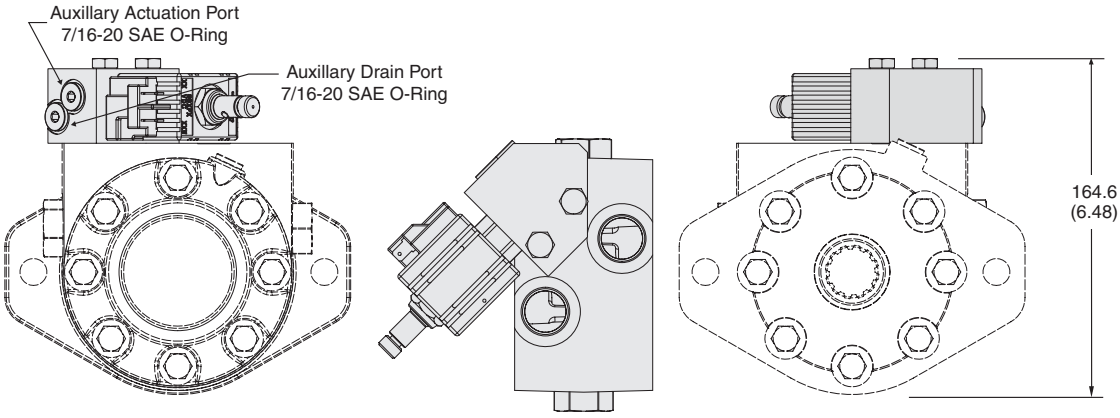

High Speed Series Mode

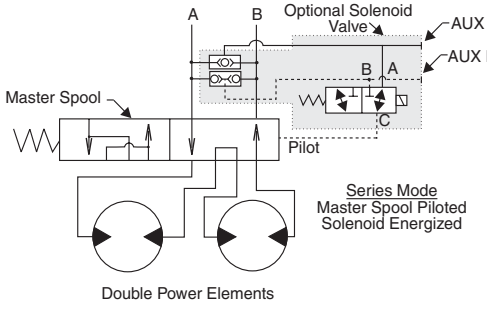

High Torque Parallel Mode

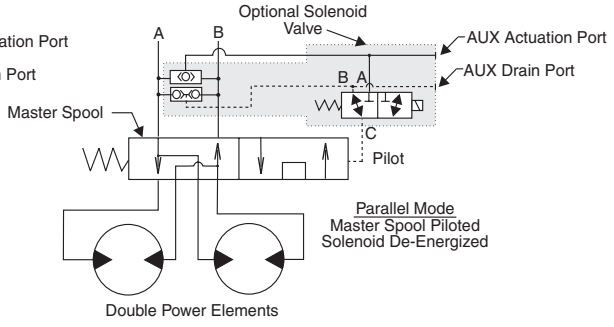

Add .5 kg (1.1 lb) for this option.

English equivalents for metric specifications are shown in ( ).

WARNING
This product can expose you to chemicals including lead and DEHP, which are known to the State of California to cause cancer, and birth defects or other reproductive harm. For more information go to www.p65warnings.ca.gov

Tel: +45 63 12 83 00 | Email: ps@hymatik.com | www.hymatik.com | Hvidkaervej 27a, DK-5250 Odense SV, Denmark

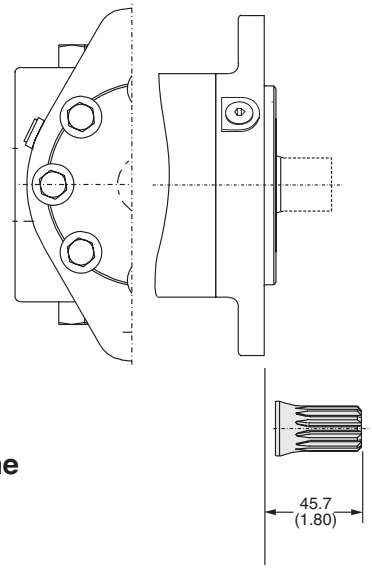

Code: 6

7/8"-13 Tooth Spline

Code: 6

7/8"-13 Tooth Spline

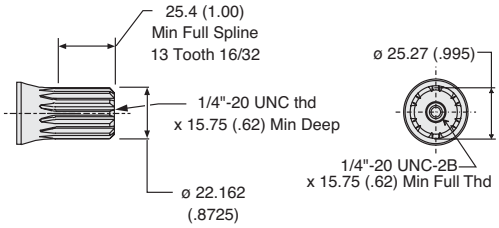

English equivalents for metric specifications are shown in ( ).

WARNING
This product can expose you to chemicals including lead and DEHP, which are known to the State of California to cause cancer, and birth defects or other reproductive harm. For more information go to www.p65warnings.ca.gov

Tel: +45 63 12 83 00 | Email: ps@hymatik.com | www.hymatik.com | Hvidkaervej 27a, DK-5250 Odense SV, Denmark

Cross-Over Relief Valve / Schockventil
Valve anti-choc / Vavola di soprapressione

LSHT Torqmotors™ and Nichols™ Motors
Nichols™ Options

HY13-1590-011/US,EU

Specifications

- **Rated flow** — 20 gpm
- **Max. Operating Pressure** — adjustable up to 3500 psi, factory preset at 1750 psi.
- **Reseat Pressure** — 90% of set pressure
- **Operating Temperature Range:** -40°F to 250°F
- **Cartridge Material** — All parts steel. All operating parts hardened steel.
- **Body Material** — Steel

Einsatzdaten

- Max. Fluß 76l/min.
- Max. Druck 240 bar (Voreinstellung 120 bar)
- Hysterese 90% des Öffnungsdrucks
- Betriebstemperatur –40°C bis 115°C
- Ventil in Stahlausführung
- Code für Ausführung schwarz grundiert

Spécifications

- **Débit nominal** – 75,7 litres/minute (20 gallons/minute)
- **Pressure de service maximale** – ajustable jusqu'à 246 kg/cm² (3 500 ppo²), préréglée à l'usine à 123 kg/cm² (1 750 ppo²).
- **Pression de rajustage** – 90% de la pression de consigne
- **Gamme des températures de service** – de – 40° C à 121° C (-40° F à 250° F).
- **Matériau de la cartouche** – Entièrement en acier. Toutes les pièces de service en acier durci.
- **Matériau du corps** – Acier

Especificaciones técnicas

- **Caudal:** 20 galones/minuto
- **Presión máxima de servicio:** regulable hasta 3.500 libras/pulg.². Regulada de fábrica a 1.750 libras/pulg.².
- **Presión de reasentamiento:** 90% de la presión calibrada.
- **Gama de temperatura de servicio:** - 40° F a 250° F
- **Material del cartucho:** todas las partes son de acero. Todas las partes activas son de acero templado.
- **Material del cuerpo:** acero

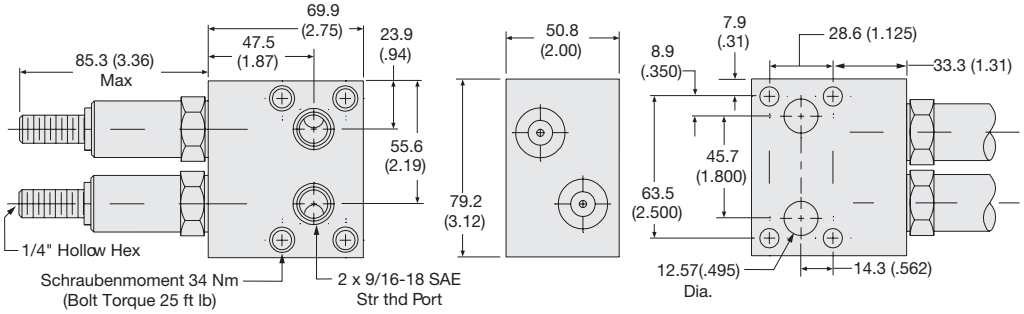

Top View **Rear View** **Bottom View**

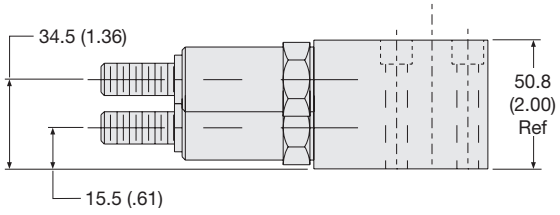

Side View

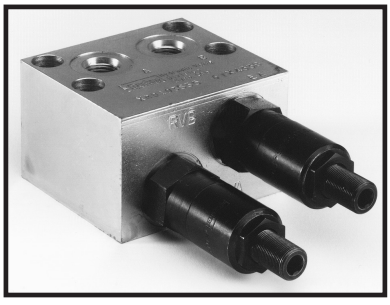

Performance Curve

Flow vs. Pressure
Inlet Pressure-bar (PSI)

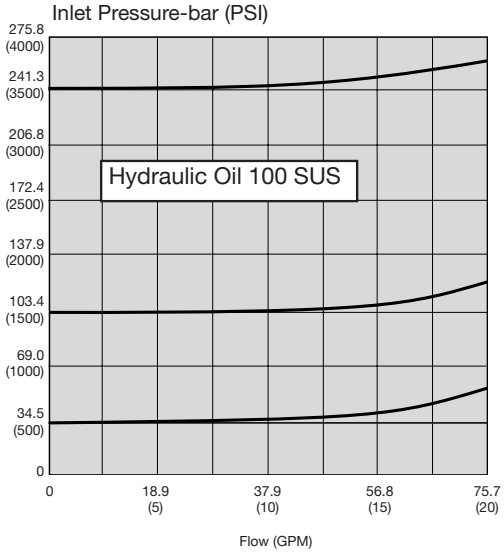

Consult factory for other available options, configurations ordering codes and lead times.

English equivalents for metric specifications are shown in ( ).

024 Nichols Options.indd, a

WARNING

This product can expose you to chemicals including lead and DEHP, which are known to the State of California to cause cancer, and birth defects or other reproductive harm. For more information go to www.p65warnings.ca.gov

Parker Hannifin Corporation
Pump & Motor Division
Greeneville, Tennessee, USA

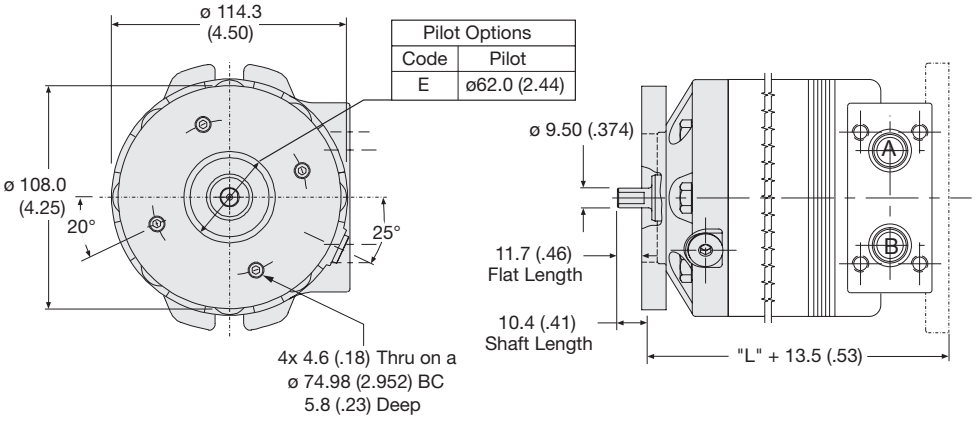

Pilot Options	
Code	Pilot
E	ø62.0 (2.44)

Note:
To mount encoder, remove (4) socket head cap screws attaching rear encoder mounting plate to motor. Attach encoder and encoder mounting plate to motor using (4) longer socket head cap screws, furnished. Torque to 10 lb in.

Hinweis:
Zur Montage der Impulsscheibe zunächst die vier Sechskantkopfschrauben lösen, mit denen die hintere Impulsscheiben-Befestigungsplatte am Motor angeschraubt ist. Zum Anschrauben von Impulsscheibe und Impulsscheiben-Befestigungsplatte am Motor die bereitgestellten vier längeren Sechskantkopfschrauben verwenden. Maximal zulässiges Drehmoment: 1,13 Nm (10 lb in).

Remarque :
Pour monter l'encodeur, enlever les (4) vis à tête creuse qui retiennent la plaque de montage arrière de l'encodeur au moteur. Attacher l'encodeur et la plaque de montage de l'encodeur au moteur à l'aide des (4) longues vis à tête creuse fournies. Serrer jusqu'à 10 liv.po.

Nota:
Para montar el codificador, quitar los (4) tornillos de cabeza hueca que fijan la placa del codificador al motor. Fijar el codificador y la placa al motor, usando los (4) tornillos más largos que se suministran. Ajustarlos con un torque de 10 libras-pulgada.

Standard Length & Weights for 700 Series on Page 326-327, 716 Series on Page 350.
Längen/Gewichte 700 Serie siehe Seiten 326-327, 716 Serie siehe Seiten 350.
Longueurs et poids courants pour la série 700, voir les pages 326-327, série 716, voir les pages 350.
Los valores estándar de longitud y peso de la Serie 700 se puede ver en las Páginas 326-327, Serie 716 se puede ver en las Páginas 350.

Consult factory for other available options, configurations ordering codes and lead times.

English equivalents for metric specifications are shown in ( ).

WARNING
This product can expose you to chemicals including lead and DEHP, which are known to the State of California to cause cancer, and birth defects or other reproductive harm. For more information go to www.p65warnings.ca.gov

Tel: +45 63 12 83 00 | Email: ps@hymatik.com | www.hymatik.com | Hvidkaervej 27a, DK-5250 Odense SV, Denmark

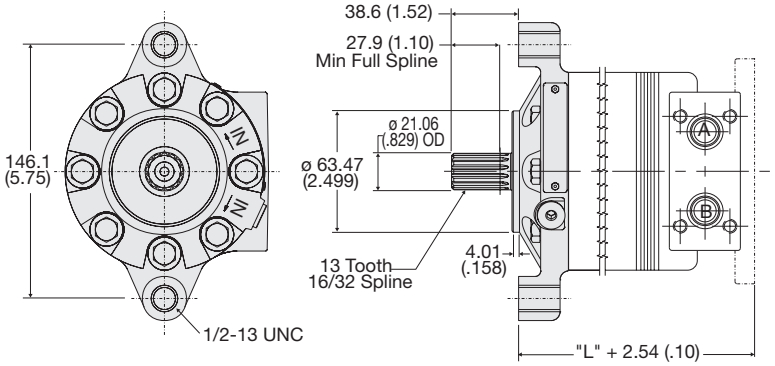

Note:
Torque Rating: Maximum torque should not exceed 339 Nm (3000 lb in) in dynamic on the thru-shaft. Consult factory if the radial load on the thru-shaft exceed 1780 N (400 lb).

Hinweis:
Drehmoment-Grenzwert: Das statische Drehmoment auf die durchgehende Welle darf höchstens 339 Nm (3000 lb in) betragen. Wenn die radiale Querbelastung auf die durchgehende Welle größer als 1780 N (400 lb) ist, vom Herstellerwerk beraten lassen.

Remarque :
Couple: Le couple maximal ne devrait pas dépasser 339 Nm (3000 liv. po.) dynamique sur l'arbre traversant. Consulter l'usine si la charge radiale sur l'arbre traversant dépasse 1780 N (400 livres).

Nota:
Valor de torque: el torque máximo en el eje pasante no debe superar 339 N-m (3000 libras-pulgada) dinámico. Si la carga radial sobre el eje pasante superara 1780 N (400 libras), consultar a fábrica.

⚠ WARNING
If torque on the thru-shaft exceeds 339 Nm (3000 lb in) when attempting to dynamically brake a load, the thru-shaft splines and/or shaft could fail and all braking action could be lost.

⚠ WARNUNG
Wenn beim Versuch, die Last dynamisch abzubremsen, das Drehmoment auf die Welle größer als 339 Nm (3000 lb in) wird, können die Keilwellenverbindung und/oder die Welle versagen und alle Bremswirkung verloren gehen.

⚠ AVERTISSEMENT
Si le couple sur l'arbre traversant dépasse 339 Nm (3000 liv. po.) au moment d'essayer le freinage dynamique d'une charge, les cannelures de l'arbre traversant et/ou l'arbre pourraient échouer et toute action de freinage pourrait être perdue.

⚠ ADVERTENCIA
Si el torque en el eje pasante superara 339 N-m (3000 libras-pulgada) al intentar frenar una carga dinámicamente, las estrías del eje o el mismo eje podrían fallar, perdiéndose la acción de frenado.

Standard Length & Weights for 110A Series on Pages 302-304.
Längen/Gewichte 110A Serie siehe Seiten 302-304.
Longueurs et poids courants pour la série 110A, voir les pages 302-304.
Los valores estándar de longitud y peso de la Serie 110A se puede ver en las Páginas 302-304.

Consult factory for other available options, configurations ordering codes and lead times.

English equivalents for metric specifications are shown in ( ).

⚠ WARNING
This product can expose you to chemicals including lead and DEHP, which are known to the State of California to cause cancer, and birth defects or other reproductive harm. For more information go to www.p65warnings.ca.gov

Tel: +45 63 12 83 00 | Email: ps@hymatik.com | www.hymatik.com | Hvidkaervej 27a, DK-5250 Odense SV, Denmark

Stainless Steel Shaft
Encoder Mount Standard, 2.44 Pilot
External Relief Valve - adjustable up to 3500 psi, factory preset at 1750 psi.
Thru Shaft with Brake Mount
Consult Factory for Other Positions

* To order crossover relief valve mounted on a specific motor see the ordering information for that motor.

  To order crossover relief valve as a field conversion or a spare part consult factory for part number.

  Mounting bolts are available as 5/16-18 socket head cap screw (4 required) as well as 2 o-rings.

  Consult factory for part number.

* Zur Bestellung eines bestimmten Motors mit werkseitig montiertem Bremsdruckbegrenzungsventil konsultieren Sie bitte die Bestellinformationen für den betreffenden Motor.

  Soll das Bremsdruckbegrenzungsventil für eine Feldumrüstung oder als Ersatzteil bestellt werden, bitte die Artikelnummer beim Werk erfragen.

  Befestigungsschrauben in Form von 5/16-18-Sechskantkopfschrauben (es werden 4 benötigt) sowie 2 O-Ringe können vom Werk bezogen werden.

  Artikelnummer beim Werk erfragen.

* Pour commander une soupape de sûreté transversale montée sur un certain moteur, voir les informations de commande pour ce moteur.

  Pour commander une soupape de sûreté transversale pour la conversion sur place ou comme pièce de rechange, consulter l'usine pour obtenir le numéro de la pièce.

  Les boulons de montage sont disponibles en tant que vis à tête creuse de 5/16-18 (4 sont requises) ainsi que 2 joints toriques.

  Consulter l'usine pour obtenir le numéro de la pièce.

* Para pedir una válvula de alivio transversal montada en determinado motor, véanse las especificaciones de dicho motor.

  Para pedir una válvula de alivio transversal para conversión directa o como parte de repuesto, consultar con fábrica sobre el número de parte.

  Los pernos de montaje vienen en tipo de cabeza hueca hexagonal de 5/16-18 (se necesitan 4) y con 2 sellos toroidales (O rings).

  Consultar con fábrica sobre el número de parte.

Consult factory for other available options, configurations ordering codes and lead times.

⚠ **WARNING**
This product can expose you to chemicals including lead and DEHP, which are known to the State of California to cause cancer, and birth defects or other reproductive harm. For more information go to www.p65warnings.ca.gov

Tel: +45 63 12 83 00 | Email: ps@hymatik.com | www.hymatik.com | Hvidkaervej 27a, DK-5250 Odense SV, Denmark

Fluid
To insure maximum motor performance and life, use a premium grade hydraulic or engine oil. Fluids with a minimum .125% zinc (or equivalent) anti-wear package should be used. A mineral or synthetic based 10W40 engine oil or hydraulic oil (200 SUS) is recommended. Nichols motor seals come standard in nitrile rubber. If a fluid that is not compatible with nitrile is to be used, flouroelastomer seal material can be specified.

- Minimum fluid viscosity - 50 SUS
- Recommended fluid operating temperature is -28°C to 82°C (-20°F to 180°F)
- Minimum recommended fluid filtration 25 micron with a beta ratio of 2.

Pressure
Operating the motor in its intermittent pressure range will shorten the life of the motor and should generally be restricted to 10% or less per minute. The reduced life resulting from continuous operation in the intermittent range may be acceptable in some applications. Consult the factory for details.

Case Drain
A check ball system drains the shaft seal to the outlet port regardless of direction of rotation of the shaft. This maintains low pressure on the shaft seal, reducing heat and friction for long seal life. If high pressure exists in the outlet port due to series operation, meter-out circuitry or other causes, the shaft seal can be externally drained to tank for low seal pressure. For continuous operation with outlet pressure above 1000 psi use of the external case drain is recommended for extended seal life.

Shaft Loading
The use of 1 inch and 25mm diameter shafts are not recommended when torque loads exceed 3500 lb-in. For 7/8 inch diameter shafts, torque should be limited to 1250 lb-in. Maximum thrust load on the shaft should not exceed 1000 lbs inward or outward.

Stainless Steel Shafts
Torque, speed, axial, and radial load ratings are reduced by 20% when operating with the stainless steel shaft that is optional on some series of motors. Maximum speed to be limited to 600 RPM.

Thru-Shafts
Shaft torque should not exceed 3000 lb-in.

Performance Data
Performance data shown in this catalog is the result of testing performed using petroleum based fluid at 120°F, 180 SUS. Actual performance will vary with fluid conditions. Lower viscosity will produce lower performance.

Run-In
For optimum performance and life, a 15 minute run-in period at no load and mid-flow conditions is recommended. Do not subject the system to full load until air has been bled from the hydraulic system and all contaminate particles have been filtered out.

Inlet Conditions
Positive pressure *must* be available at the motor inlet while it is operating. If an overrunning load causes the motor to rotate faster than the pump can fill it, cavitation will occur. Consult the factory for inlet pressure requirements and speed limitations.

Other Operating Conditions
Consult factory before operating at conditions exceeding any ratings or recommendations in this catalog.

Installation Recommendations
- To avoid contamination do not remove plastic port plugs until fittings are to be installed.
- Motor mounting flange must make full contact with equipment mount; do not use the mounting bolts to force the motor pilot into the pilot hole to align the motor.
- Pulleys, sprockets, wheels, or couplings should be properly aligned on the shaft to avoid excessive radial or thrust loads.
- To avoid damaging the thrust system, do not hammer on the motor or shaft to install or remove couplings, pulleys, sprockets, etc.

⚠ **WARNING**
This product can expose you to chemicals including lead and DEHP, which are known to the State of California to cause cancer, and birth defects or other reproductive harm. For more information go to www.p65warnings.ca.gov

Notes

⚠ **WARNING**
This product can expose you to chemicals including lead and DEHP, which are known to the State of California to cause cancer, and birth defects or other reproductive harm. For more information go to www.p65warnings.ca.gov

Tel: +45 63 12 83 00 | Email: ps@hymatik.com | www.hymatik.com | Hvidkaervej 27a, DK-5250 Odense SV, Denmark

Hydraulic Formulas

$$HP_{in} = \frac{Q \Delta P}{1714}$$

$$HP_{out} = \frac{NT}{63025}$$

$$T = \frac{D \Delta Pe_m}{2 \pi}$$

$$Q = \frac{DN}{231\ e_v}$$

Where

HP = Horsepower
Q = Flow, GPM
P = Pressure, PSI
ΔP = Pressure differential across the motor
π = 3.1416
T = Torque, lb in
D = Motor displacement, cubic inches per revolution
N = Shaft Speed, RPM
e_m = Mechanical efficiency
e_v = Volumetric efficiency

To Convert → Into → Multiply By		
Into ← To Convert ← Divide By		
bars	pounds/sq.in.	14.5
BTU/min	horsepower	.02356
BTU/min	kilowatts	.01757
centigrade	fahrenheit	(C°x9/5)+32
centimeters	inches	.3937
cu. cms.	cu. inches	.06102
cu. cms.	liters	.001
cu. inches	cu.cms.	16.39
cu. inches	liters	.01639
feet	meters	.3048
gallons	cu. inches	231
gallons	liters	3.785
horsepower	kilowatts	.7457
inches	millimeters	25.4
kilograms	pounds	2.205
pounds	newtons	4.448
pound-inches	newton-meters	.113
pound-inches	daNM	.0113
radians	degrees	57.3
square inches	sq. cms.	6.452

Side Load

Side loads are imposed upon the shaft of a motor by:

- Driving the load through a pulley or gear
- Supporting the weight of a vehicle or other load on the shaft

Or both

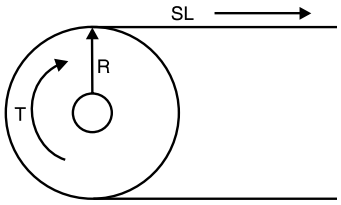

If the load above requires torque T pound-inches and is driven with a pulley on the motor shaft a with a radius of R inches, the side load imposed on the motor shaft is T/R pounds. If the motor shaft is connected to a sprocket for a chain drive, R is one half the pitch diameter of the sprocket. If an external load with a weight of W pounds is also being supported by the motor shaft above, the total side load on the shaft is:

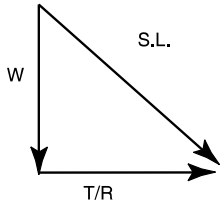

$$(SL)^2 = W^2 + (T/R)^2$$

$$\text{Side Load(lb)} = \sqrt{W^2 + (T/R)^2}$$

Warning
This Catalog is not a Controlled Document. All Dimensions listed herein are for reference only. Consult a Sales engineer for detailed information.

WARNING
This product can expose you to chemicals including lead and DEHP, which are known to the State of California to cause cancer, and birth defects or other reproductive harm. For more information go to www.p65warnings.ca.gov

Tel: +45 63 12 83 00 | Email: ps@hymatik.com | www.hymatik.com | Hvidkaervej 27a, DK-5250 Odense SV, Denmark

Vehicle Propulsion Systems

Hydraulic motors are often used to drive off-highway vehicles, either directly or through gear reducers. The power required to propel the vehicle, called "Tractive Effort," is supplied by the hydraulic motor(s). It is normally expressed in pounds and is the sum of the forces below:

TE = (RR+GR+F+DP) x 1.1 Where:

RR = Rolling Resistance
GR = Grade Resistance
F = Acceleration Force
DP = Drawbar Pull

Definitions

• Tractive Effort (TE)

Tractive effort is the total linear force that a vehicle can exert on the ground. Sometimes called "rim pull," it is the axle torque divided by the distance from the axle to the surface it is traversing.

• Rolling Resistance (RR)

Rolling resistance is the force in pounds required to propel a vehicle at constant speed over level terrain. It varies with the weight of the vehicle and the type of surface it is traversing. Soft sand, for example, offers more resistance to movement than concrete.

RR = GVW x R where:

RR = Rolling Resistance (lbs.)
GVW = Gross Vehicle Weight (lbs.)
R = Rolling Resistance Factor dependent upon type and condition of surface. Typical "R" values are shown in the accompanying table.

Surface Type	Surface Condition	R Value
Concrete	Excellent	0.010 lb.
Concrete	Good	0.015 lb.
Concrete	Poor	0.020 lb.
Asphalt	Good	0.012 lb.
Asphalt	Fair	0.017 lb.
Asphalt	Poor	0.022 lb.
Macadam	Good	0.015 lb.
Macadam	Fair	0.022 lb.
Macadam	Poor	0.037 lb.
Cobbles	Ordinary	0.055 lb.
Cobbles	Poor	0.085 lb.
Grass		0.025 lb.
Snow	2 In.	0.025 lb.
Snow	4 In.	0.037 lb.
Dirt	Smooth	0.025 lb.
Dirt	Sandy	0.037 lb.
Mud		0.037 to 0.150 lb.
Sand	Level/Soft	0.060 to 0.150 lb.
Sand	Dune	0.150 to 0.300 lb.

WARNING
This product can expose you to chemicals including lead and DEHP, which are known to the State of California to cause cancer, and birth defects or other reproductive harm. For more information go to www.p65warnings.ca.gov

• Grade Resistance (GR)

Grade resistance is the additional force required to move a vehicle up an incline. The grade of a slope is normally expressed as a percentage, and represents the number of feet of rise in 100 feet of length. A slope that rises 10 feet in 100 feet has a grade of 10%. The gradeability of a vehicle is defined as the maximum grade the vehicle can climb.

GR = 0.01 x GVW x G where:

GR = Grade Resistance (lbs.)
GVW = Gross Vehicle Weight (lbs.)
G = Grade (%)

The following table gives the approximate relationship between grade in percent and slope in degrees.

Grade (Percent)	Slope (Degrees)
1%	0° 35'
2%	1° 9'
5%	2° 51'
6%	3° 26'
8%	4° 35'
10%	5° 43'
12%	6° 54'
15%	8° 31'
20%	11° 19'
25%	14° 3'
32%	18°
60%	31°

• Acceleration Force (F)

The force required to accelerate a vehicle from an initial speed V_1 (in feet/second) to speed V_2 in T seconds is the accelerating force in pounds. If the acceleration is from rest, V_1 is zero.

$$F = \frac{V \times GVW}{T \times 32.16}$$ where

V = Change in Velocity (ft. per Second) (Final Velocity - Initial Velocity)
GVW = Gross Vehicle Weight (lbs.)
T = Time for Velocity Change (Seconds)

Note - To obtain velocity in feet per second when MPH is known, Multiply MPH by 1.467.

• Drawbar Pull (DP)

Drawbar Pull is the force a vehicle can exert on a load in addition to the force required to propel itself.

Actual force to tow or push a load can be calculated based upon Rolling Resistance, Accelerating Force and Grade Resistance of towed or pushed load.

• Motor Torque

The total Tractive effort required to propel a vehicle is the sum of the forces due to Rolling Resistance, Grade Resistance, Acceleration and Drawbar Pull plus 10% for friction and other variables:

TE = (RR + GR + F + DP) x 1.1

When Tractive Effort has been calculated, hydraulic motor torque can be estimated by:

$$T = \frac{TE \times r}{G \times N}$$ where:

T = Hydraulic Motor Torque (lbs. in.)
TE = Tractive Effort
r = Rolling Radius of Driven Tires (inches)
G = Gear Reduction Ratio Between Hydraulic Motors and Driven Wheels (if none, use a value of 1)
N = Number of Driving Motors

WARNING
This product can expose you to chemicals including lead and DEHP, which are known to the State of California to cause cancer, and birth defects or other reproductive harm. For more information go to www.p65warnings.ca.gov

• Slip Torque

Slip torque is the torque at the motor shaft that will cause the wheels or tracks to break traction and skid. It is affected by the weight of the vehicle and the coefficient of friction between the wheels or tracks and the surface.

$$ST = \frac{VW \times u \times r}{G \times N}$$ where:

- ST = Hydraulic Motor Slip Torque (lb in)
- VW = Maximum Weight on Driven Wheel (lb) Including: Allowable Vehicle Overload Dynamic Weight Shift.
- u = Coefficient of Friction Between Tire and Ground. (A value of 0.6 is used for "normal" tires and an average road surface)
- r = Rolling Radius of Driven Tires (inches)
- G = Gear Reduction Ratio Between Hydraulic Motors and Driven Wheel.
- N = Number of Driving Motors

• Rolling Radius

The rolling radius should be based on actual application factors such as Plyrating, Rated Load and inflation pressure can result in different values.

• Hydraulic Motor Speed

$$S = \frac{168 \times V \times G}{r}$$ where:

- S = Required Hydraulic Motor Speed (RPM)
- V = Desired Vehicle Velocity (MPH)
- G = Gear Reduction Ratio Between Hydraulic Motors and Driven Wheels (if none, use a value of 1)
- r = Rolling Radius of driven Tires (inches)

The chart below will estimate the wheel RPM -vs- vehicle velocity for various rolling radii.

MPH -vs- RPM
for different Rolling Radii

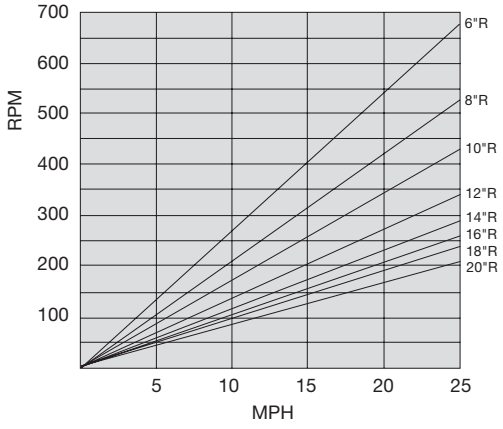

WARNING
This product can expose you to chemicals including lead and DEHP, which are known to the State of California to cause cancer, and birth defects or other reproductive harm. For more information go to www.p65warnings.ca.gov

Parker

High Speed Hydraulic Motors

Catalog HY13-2600-800-001/NA

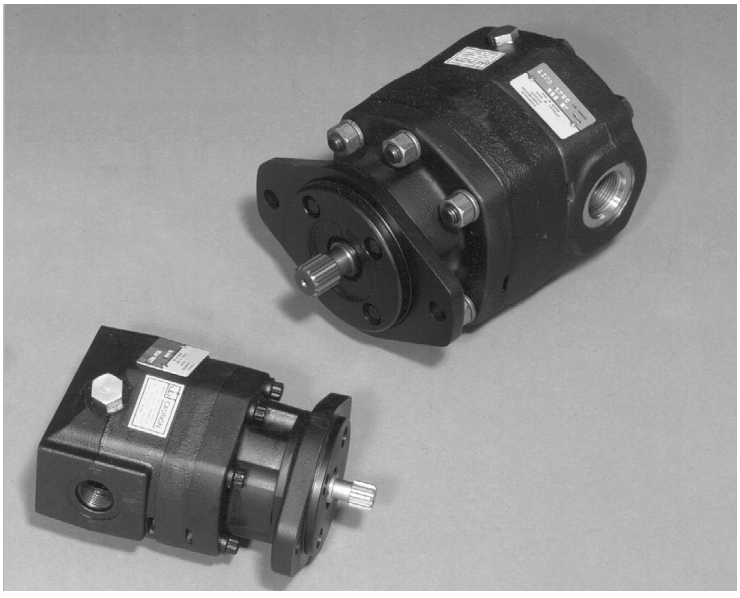

⚠ WARNING
This product can expose you to chemicals including lead and DEHP, which are known to the State of California to cause cancer, and birth defects or other reproductive harm. For more information go to www.p65warnings.ca.gov

Parker Hannifin Corporation
Pump & Motor Division
Greeneville, Tennessee, USA

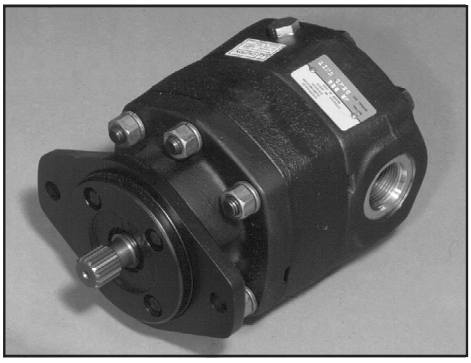

Features

- **High Starting Torque** typically 90% of running torque.
- **Smooth Output Torque** throughout the entire speed range of the motor.
- **High Speed Capabilities** up to 7500 rpm on some models.
- **Bi-Directional Operation** built in checks internally relieve high pressure from the shaft seal.
- **High Pressure Shaft Seal** allows back pressure to 400 PSI without the requirement of Case Drain.
- **Standard SAE Mounting** 2 or 4 bolt mounting flanges, shaft and port dimensions conform to SAE standards.
- **Long Life & Quiet Operation** Precision Gerotor Design results in a motor with extended operating life and noise levels below most other hydraulic motors.
- **Heavy Duty Bearings** capable of withstanding radial and thrust loads.

⚠ **WARNING**
This product can expose you to chemicals including lead and DEHP, which are known to the State of California to cause cancer, and birth defects or other reproductive harm. For more information go to www.p65warnings.ca.gov

Ordering Information

XX	X	XX	XX	S	XX	N	X
Motor Series	SAE Port & Mounting/ Valve Mount	Product Code	Port Size	Port Type	Shaft Style	Drain	Shaft Seal

Series	
Code	Type
M2	SAE 101 (B-Frame)
M4	SAE 82 (A-Frame)

SAE Port & Mounting		
Code	Ports	Mtg.
B	Side	2-Bolt
D†	Side	4-Bolt

† M4 not available.

Port Size		
Series	Code	SAE
M4	10	10
	12	12
M2	12	12
	16	16

Port Type	
Code	Type
S	SAE Straight Thread

Shaft Style	
Code	Type
20†	Long, Single-End
30	Short, Single-End
40	Spine, Single-End

† M4 only available with 20 code shaft.

Drain	
Code	Type
N	Internal

Includes plugged external drain.

Shaft Seal	
Code	Type
B	Nitrile
V	Fluorocarbon

Product Code			
Series	Code	Theoretical cm^3/rev	Displacement in^3/rev
M4	015	2.45	.15
	030	4.91	.30
	045	7.37	.45
	060	9.83	.60
	075	12.29	.75
M2	085	13.9	.85
	127	20.8	1.27
	169	27.7	1.69
	254	41.6	2.54
	339	55.6	3.39
	508	83.2	5.08

THERMAL SHOCK WARNING:

IF THE MOTOR IS TO OPERATED BY FLUID WHICH IS 80°F OR MORE ABOVE THE OPERATING ENVIRONMENT TEMPERATURE, CONSULT FACTORY.

WARNING
This product can expose you to chemicals including lead and DEHP, which are known to the State of California to cause cancer, and birth defects or other reproductive harm. For more information go to www.p65warnings.ca.gov

Tel: +45 63 12 83 00 | Email: ps@hymatik.com | www.hymatik.com | Hvidkaervej 27a, DK-5250 Odense SV, Denmark

Applications

Parker motors serve our customers worldwide in many industries and in many applications. Typical applications include:

Fan Drives High speed capabilities means increased cooling capacity. Rugged bearing design allows the fan to be mounted directly on the motor shaft.

Swing Drives High starting torque and smooth output torque throughout the motor's speed range means optimum control.

Vibratory Drives Rugged design, high speed capabilities, and optional cross port relief valve means maximum life for vibratory drives.

Wheel Drives High speed capabilities and high starting torque means faster road speeds and increased productivity.

Winch Drives Smooth output torque throughout the speed range, high speed capabilities, and high starting torque means increased control, greater productivity.

Starting and running torque comparison between Parker Gerotor and typical Spur Gear and Vane Motors.

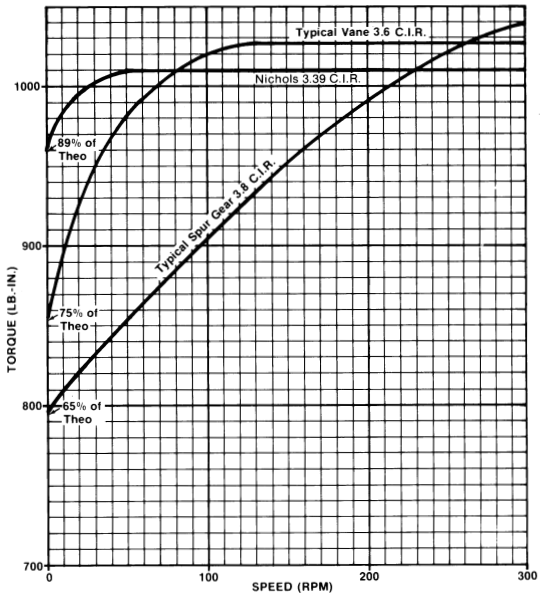

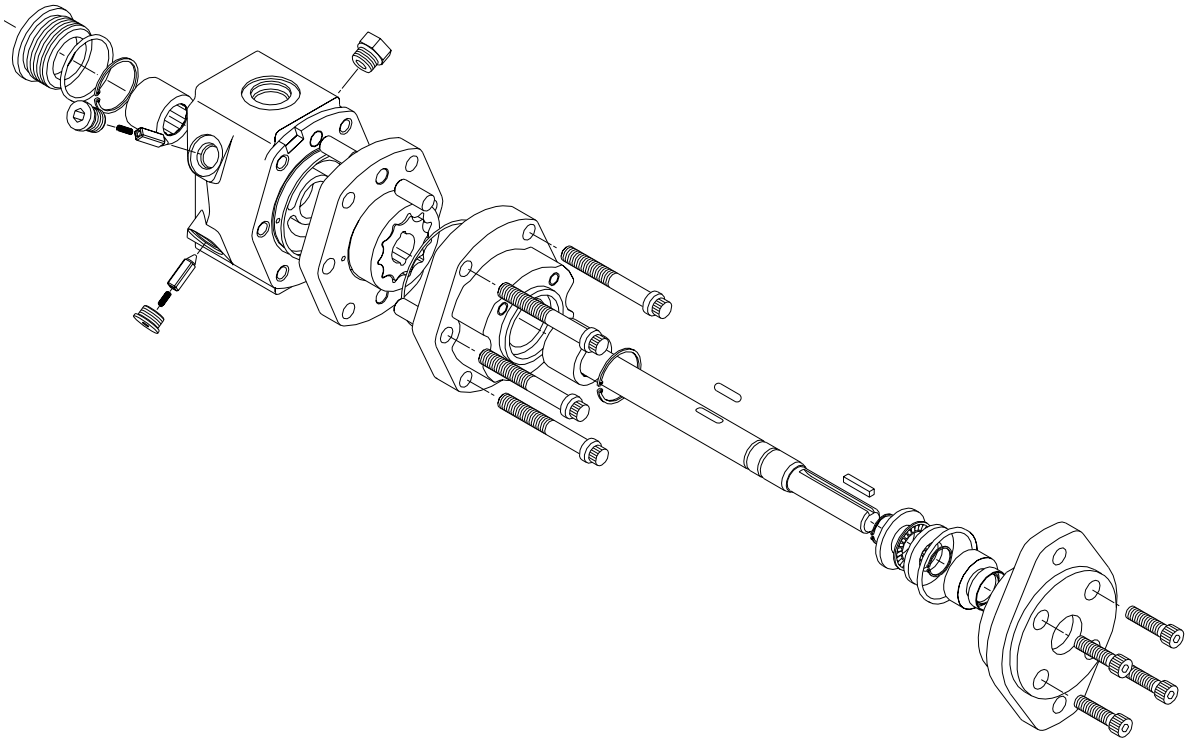

⚠ **WARNING**
This product can expose you to chemicals including lead and DEHP, which are known to the State of California to cause cancer, and birth defects or other reproductive harm. For more information go to www.p65warnings.ca.gov

Tel: +45 63 12 83 00 | Email: ps@hymatik.com | www.hymatik.com | Hvidkaervej 27a, DK-5250 Odense SV, Denmark

Performance Data & Mounting Data

M4-015

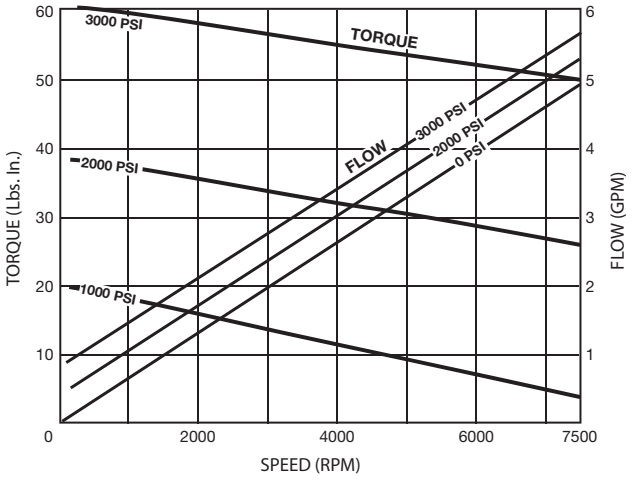

M4-030

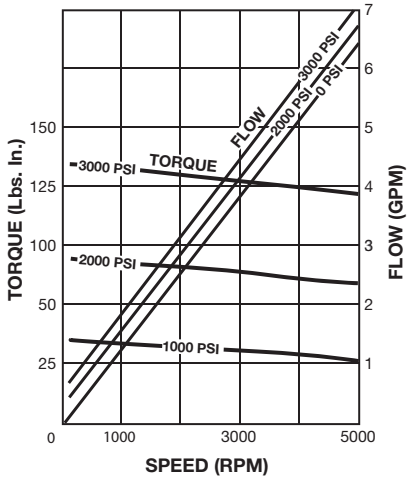

M4-060

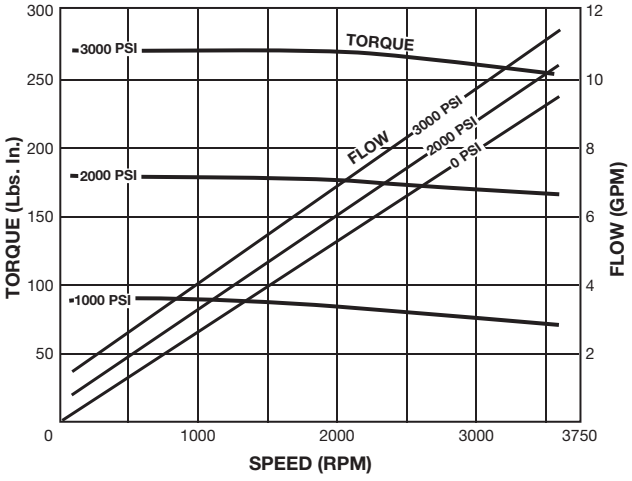

M4-075

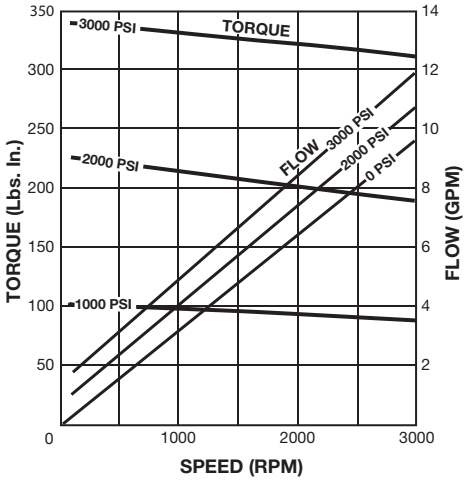

Displacement

	cm³/rev	(in³/rev)
015 Unit	2.45	(.15)
030 Unit	4.91	(.30)
045 Unit	7.37	(.45)
060 Unit	9.83	(.60)
075 Unit	12.29	(.75)

Weight

015 Unit	7.3 Kg	(16 lb)
030 Unit	7.7 Kg	(17 lb)
045 Unit	8.2 Kg	(18 lb)
060 Unit	8.6 Kg	(19 lb)
075 Unit	9.1 Kg	(20 lb)

Speed

Recommended Range

015 Unit	75 to 7500 rpm
030 Unit	50 to 5000 rpm
045 Unit	50 to 5000 rpm
060 Unit	36 to 3600 rpm
075 Unit	30 to 3000 rpm

Minimum speeds indicated are based on constant load. For speeds outside of the recommended range, consult the factory.

Performance Curves:

Data based on:

Oil: 65 cst (300 SSU) Mobil DTE-26

Temp: 38°C (100°F)

Pressure

Continuous:	2000 PSI
† Intermittent, Max:	2400 PSI
‡ Transient, Max:	3000 PSI

† Intermittent conditions are to be less than 10% of each minute.

‡ Transient conditions are to be less than 1% of every minute.

⚠ **WARNING**
This product can expose you to chemicals including lead and DEHP, which are known to the State of California to cause cancer, and birth defects or other reproductive harm. For more information go to www.p65warnings.ca.gov

Tel: +45 63 12 83 00 | Email: ps@hymatik.com | www.hymatik.com | Hvidkaervej 27a, DK-5250 Odense SV, Denmark

Performance Data & Mounting Data

M4-045

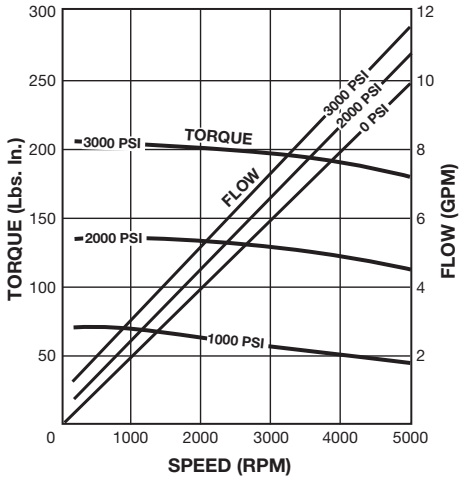

Dimensions are shown in millimeters.
Dimensions within ( ) are in inches.

Code	A	B
015	143.26 (5.64)	107.44 (4.23)
030	149.61 (5.89)	113.79 (4.48)
045	156.21 (6.15)	120.14 (4.73)
060	162.31 (6.39)	126.49 (4.98)
075	168.66 (6.64)	132.84 (5.23)

MOUNTING DATA

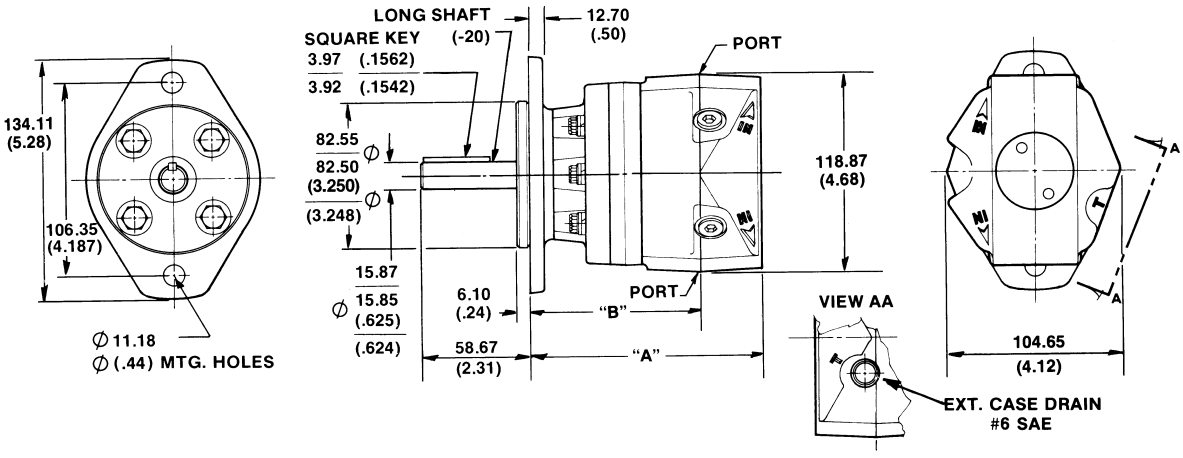

WARNING
This product can expose you to chemicals including lead and DEHP, which are known to the State of California to cause cancer, and birth defects or other reproductive harm. For more information go to www.p65warnings.ca.gov

Tel: +45 63 12 83 00 | Email: ps@hymatik.com | www.hymatik.com | Hvidkaervej 27a, DK-5250 Odense SV, Denmark

Performance Data

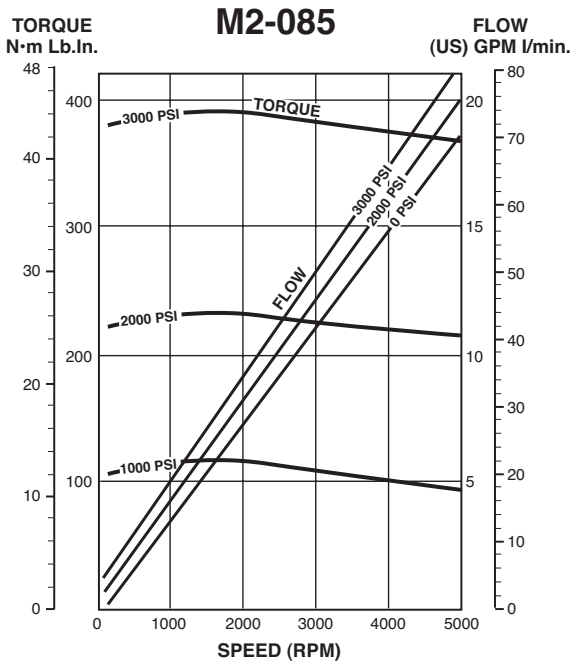

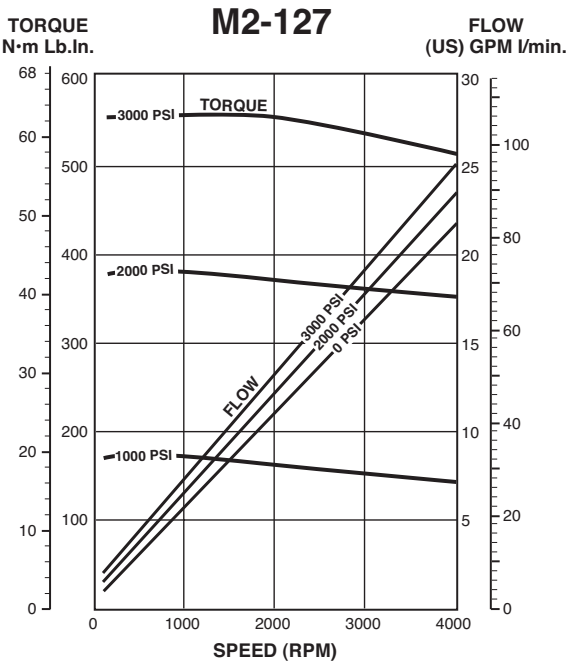

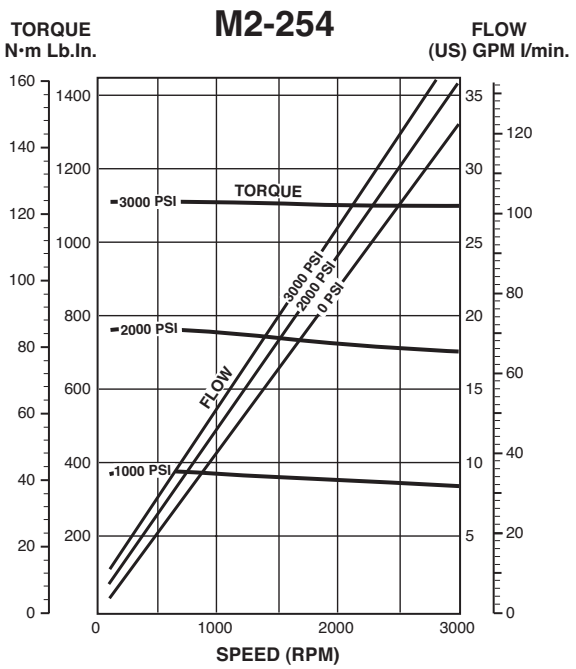

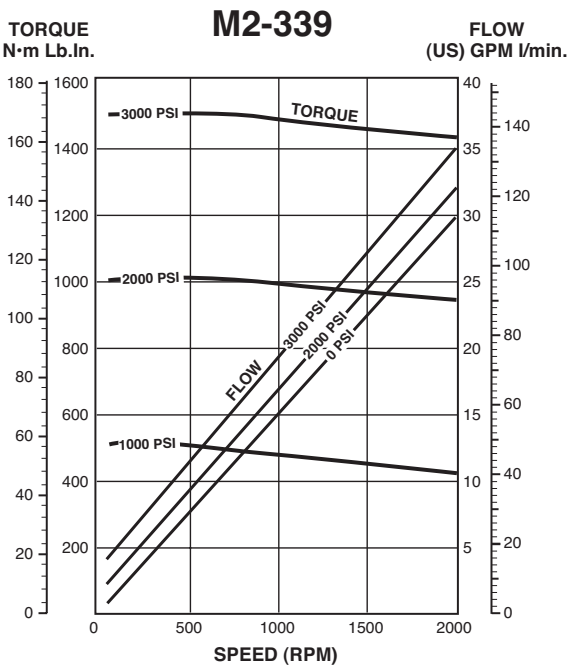

WARNING
This product can expose you to chemicals including lead and DEHP, which are known to the State of California to cause cancer, and birth defects or other reproductive harm. For more information go to www.p65warnings.ca.gov

Tel: +45 63 12 83 00 | Email: ps@hymatik.com | www.hymatik.com | Hvidkaervej 27a, DK-5250 Odense SV, Denmark

Performance Data

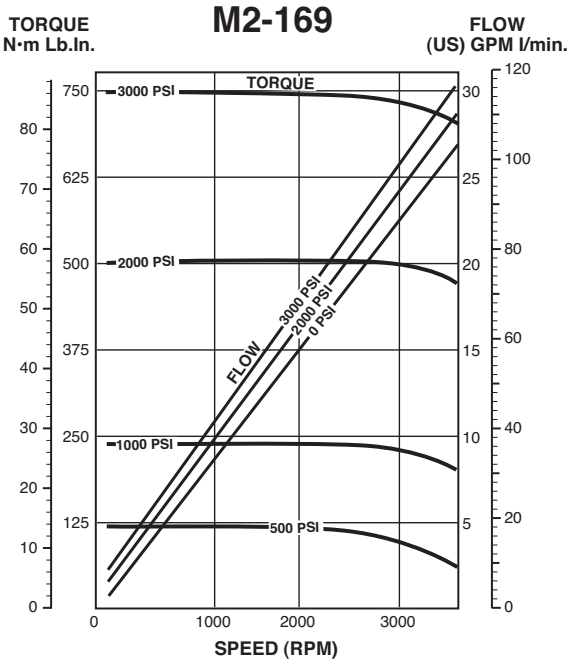

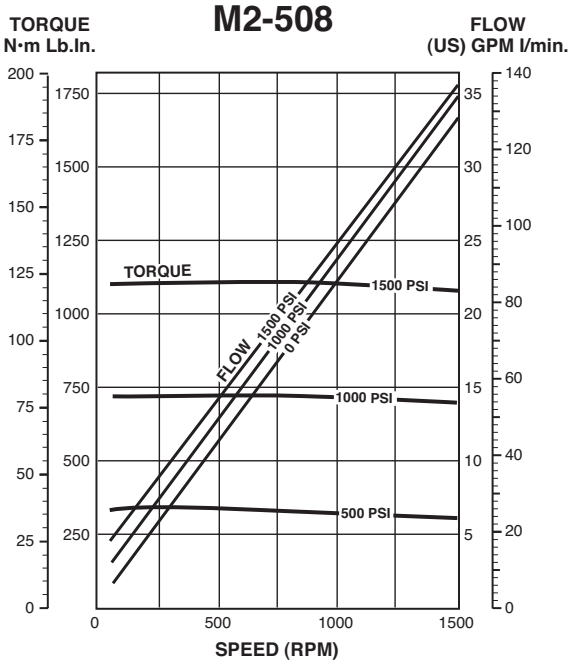

Displacement

	cm^3/rev	(in^3/rev)
085 Unit	13.9	(0.85)
127 Unit	20.8	(1.27)
169 Unit	27.7	(1.69)
254 Unit	41.6	(2.54)
339 Unit	55.6	(3.39)
508 Unit	83.2	(5.08)

Pressure

Continuous:
M2-508 1000 PSI
All other Units 2000 PSI

† Intermittent, Max:
M2-508 1400 PSI
All other Units 2400 PSI

‡ Transient, Max:
M2-508 1700 PSI
All other Units 3000 PSI

† Intermittent conditions are to be less than 10% of each minute.

‡ Transient conditions are to be less than 1% of every minute.

Speed

Recommended Range

085 Unit	50 to 5000 rpm
127 Unit	40 to 4000 rpm
169 Unit	36 to 3600 rpm
254 Unit	30 to 3000 rpm
339 Unit	20 to 2000 rpm
508 Unit	15 to 1500 rpm

Minimum speeds indicated are based on constant load. For speeds outside of the recommended range, consult the factory.

Weight

085 Unit	15.4 Kg	(34 lb)
127 Unit	16.3 Kg	(36 lb)
169 Unit	17.2 Kg	(38 lb)
254 Unit	18.6 Kg	(41 lb)
339 Unit	20.4 Kg	(45 lb)
508 Unit	24.0 Kg	(52 lb)

Performance Curves:

Data based on:
Oil: 65 cst (300 SSU) Mobil DTE-26
Temp: 38°C (100°F)
* Stall torque band is application dependent, consult factory.

WARNING
This product can expose you to chemicals including lead and DEHP, which are known to the State of California to cause cancer, and birth defects or other reproductive harm. For more information go to www.p65warnings.ca.gov

Tel: +45 63 12 83 00 | Email: ps@hymatik.com | www.hymatik.com | Hvidkaervej 27a, DK-5250 Odense SV, Denmark

Mounting Data

Dimensions are shown in millimeters.
Dimensions within ( ) are in inches.

Code	Dimension "A"
085	158.8 (6.25)
127	165.1 (6.50)
169	171.5 (6.75)
254	184.2 (7.25)
339	196.9 (7.75)
508	222.3 (8.75)

FLANGE OPTION
SAE 101-4 Mounting

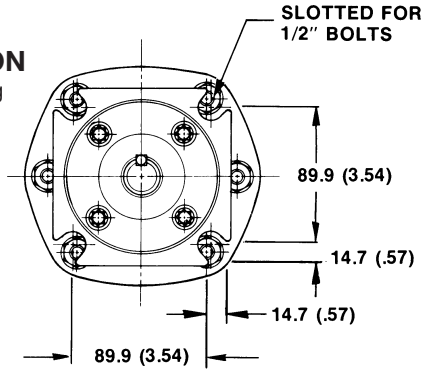

DIMENSIONS

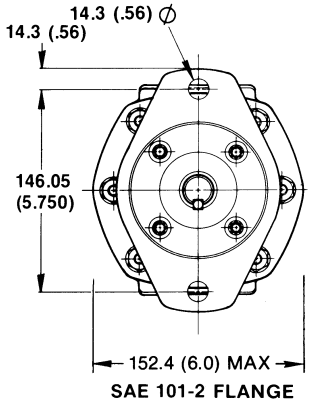

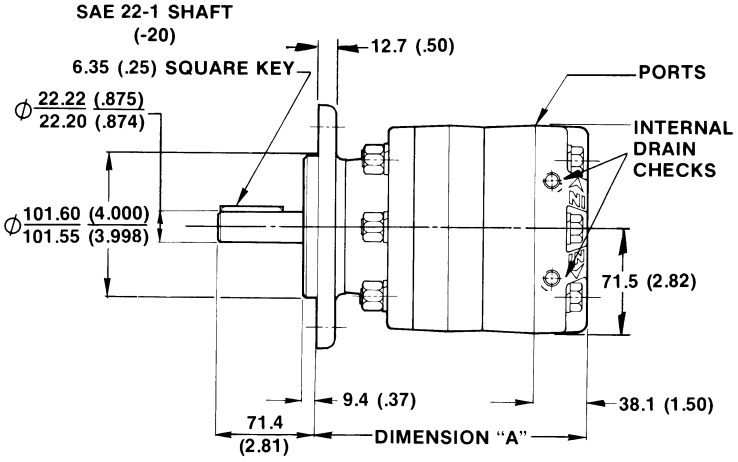

PORT LOCATION

1. The shaft will rotate in the direction of this "ARROWHEAD" when Port "A" is the inlet "IN" or pressure port.
2. With Port "B" as the inlet "IN" or pressure port, the shaft will rotate in the direction of this "ARROWHEAD".

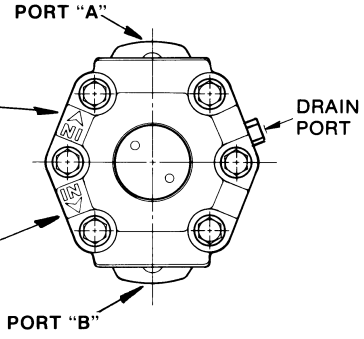

DRAIN PORT

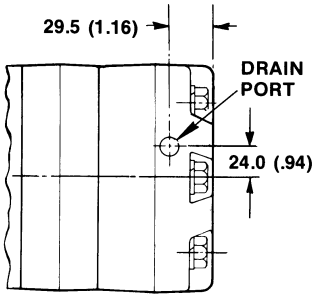

Drain Port Will Be:

1. No. 6-SAE for the SAE ported motors.

WARNING
This product can expose you to chemicals including lead and DEHP, which are known to the State of California to cause cancer, and birth defects or other reproductive harm. For more information go to www.p65warnings.ca.gov

Tel: +45 63 12 83 00 | Email: ps@hymatik.com | www.hymatik.com | Hvidkaervej 27a, DK-5250 Odense SV, Denmark

Mounting Data

Shaft Options

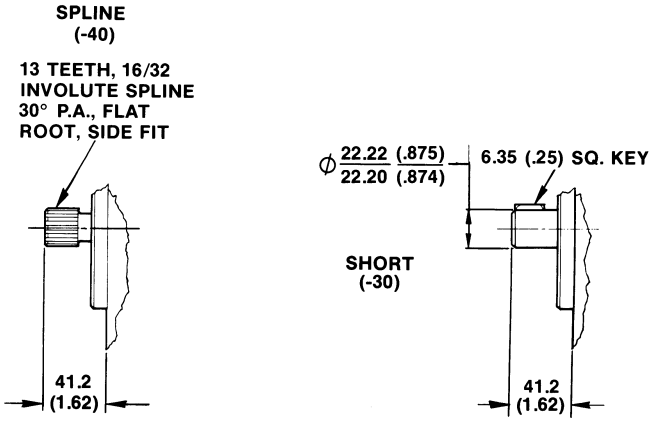

WARNING
This product can expose you to chemicals including lead and DEHP, which are known to the State of California to cause cancer, and birth defects or other reproductive harm. For more information go to www.p65warnings.ca.gov

Tel: +45 63 12 83 00 | Email: ps@hymatik.com | www.hymatik.com | Hvidkaervej 27a, DK-5250 Odense SV, Denmark

Operating Pressures

Continuous:
- M2-508 1000 PSI
- All other Units 2000 PSI

Intermittent, Max:
- M2-508 1400 PSI
- All other Units 2400 PSI

Transient, Max:
- M2-508 1700 PSI
- All other Units 3000 PSI

Filtration

25 micron or less

Fluids

To insure ultimate component life, use premium quality hydraulic oils. Fluids with effective quantities of anti-wear agents or additives, (such as Mobil Oil DTE-26), are highly recommended.

Viscosity

Maximum	1000 centistokes 5000 SSU
Minimum	13.5 centistokes 70 SSU

Recommended Temperature Range

-40°C (-40°F) to 82°C (180°F)

Case Drain Precaution

If outlet port exceeds 400 PSI, the external case drain should be used with no more than 400 PSI back pressure.

Dimensions

Published dimensions are nominal. Allowances should be made for dimensional variations of cast parts.

Installation Requirements

Pulleys, sprockets, and belts should be properly aligned on the shaft; and fan blades should be properly sized to prevent excessive thrust loads.

Shaft Seal

The standard Nitrile shaft seal is adequate for most applications. For applications which involve shaft speeds above 2500 rpm or synthetic fluids, the operational Viton shaft seal should be specified.

Static Seals

All the o-rings included within the motor and the shaft dust seal are Nitrile. They may be used with all types of hydraulic fluids. However, since these seals swell after exposure to ester base synthetic fluids, they should be replaced if the motor is repaired.

Motor Precaution

A hydraulic motor is not designed to hold a suspended load. Therefore, if the application requires a locked position, a mechanical holding device (such as a brake) must be employed. Consult factory for availability.

For different operating conditions, consult the factory.

⚠ WARNING
This product can expose you to chemicals including lead and DEHP, which are known to the State of California to cause cancer, and birth defects or other reproductive harm. For more information go to www.p65warnings.ca.gov

Notes

⚠ WARNING
This product can expose you to chemicals including lead and DEHP, which are known to the State of California to cause cancer, and birth defects or other reproductive harm. For more information go to www.p65warnings.ca.gov

Parker Hannifin Corporation
Pump & Motor Division
Greeneville, Tennessee, USA

Tel: +45 63 12 83 00 | Email: ps@hymatik.com | www.hymatik.com | Hvidkaervej 27a, DK-5250 Odense SV, Denmark

Notes

⚠ WARNING
This product can expose you to chemicals including lead and DEHP, which are known to the State of California to cause cancer, and birth defects or other reproductive harm. For more information go to www.p65warnings.ca.gov

Tel: +45 63 12 83 00 | Email: ps@hymatik.com | www.hymatik.com | Hvidkaervej 27a, DK-5250 Odense SV, Denmark

Notes

⚠ **WARNING**
This product can expose you to chemicals including lead and DEHP, which are known to the State of California to cause cancer, and birth defects or other reproductive harm. For more information go to www.p65warnings.ca.gov

Parker Hannifin Corporation
Pump & Motor Division
Greeneville, Tennessee, USA

Tel: +45 63 12 83 00 | Email: ps@hymatik.com | www.hymatik.com | Hvidkaervej 27a, DK-5250 Odense SV, Denmark

Offer of Sale

HY13-1590-011/US,EU

The items described in this document and other documents and descriptions provided by Parker Hannifin Corporation, its subsidiaries and its authorized distributors ("Seller") are hereby offered for sale at prices to be established by Seller. This offer and its acceptance by any customer ("Buyer") shall be governed by all of the following Terms and Conditions. Buyer's order for any item described in its document, when communicated to Seller verbally, or in writing, shall constitute acceptance of this offer. All goods, services or work described will be referred to as "Products".

1. Terms and Conditions. Seller's willingness to offer Products, or accept an order for Products, to or from Buyer is subject to these Terms and Conditions or any newer version of the terms and conditions found on-line at www.parker.com/saleterms/. Seller objects to any contrary or additional terms or conditions of Buyer's order or any other document issued by Buyer.

2. Price Adjustments; Payments. Prices stated on Seller's quote or other documentation offered by Seller are valid for 30 days, and do not include any sales, use, or other taxes unless specifically stated. Unless otherwise specified by Seller, all prices are F.C.A. Seller's facility (INCOTERMS 2010). Payment is subject to credit approval and is due 30 days from the date of invoice or such other term as required by Seller's Credit Department, after which Buyer shall pay interest on any unpaid invoices at the rate of 1.5% per month or the maximum allowable rate under applicable law.

3. Delivery Dates; Title and Risk; Shipment. All delivery dates are approximate and Seller shall not be responsible for any damages resulting from any delay. Regardless of the manner of shipment, title to any products and risk of loss or damage shall pass to Buyer upon placement of the products with the shipment carrier at Seller's facility. Unless otherwise stated, Seller may exercise its judgment in choosing the carrier and means of delivery. No deferment of shipment at Buyers' request beyond the respective dates indicated will be made except on terms that will indemnify, defend and hold Seller harmless against all loss and additional expense. Buyer shall be responsible for any additional shipping charges incurred by Seller due to Buyer's acts or omissions.

4. Warranty. Seller warrants that the Products sold hereunder shall be free from defects in material or workmanship for a period of eighteen months from the date of delivery to Buyer or 2,000 hours of normal use, whichever occurs first. The prices charged for Seller's products are based upon the exclusive limited warranty stated above, and upon the following disclaimer: **DISCLAIMER OF WARRANTY:** THIS WARRANTY COMPRISES THE SOLE AND ENTIRE WARRANTY PERTAINING TO PRODUCTS PROVIDED HEREUNDER. SELLER DISCLAIMS ALL OTHER WARRANTIES, EXPRESS AND IMPLIED, INCLUDING DESIGN, MERCHANTABILITY AND FITNESS FOR A PARTICULAR PURPOSE.

5. Claims; Commencement of Actions. Buyer shall promptly inspect all Products upon delivery. No claims for shortages will be allowed unless reported to the Seller within 10 days of delivery. No other claims against Seller will be allowed unless asserted in writing within 30 days after delivery. Buyer shall notify Seller of any alleged breach of warranty within 30 days after the date the defect is or should have been discovered by Buyer. Any action based upon breach of this agreement or upon any other claim arising out of this sale (other than an action by Seller for an amount due on any invoice) must be commenced within 12 months from the date of the breach without regard to the date breach is discovered.

6. LIMITATION OF LIABILITY. UPON NOTIFICATION, SELLER WILL, AT ITS OPTION, REPAIR OR REPLACE A DEFECTIVE PRODUCT, OR REFUND THE PURCHASE PRICE. IN NO EVENT SHALL SELLER BE LIABLE TO BUYER FOR ANY SPECIAL, INDIRECT, INCIDENTAL OR CONSEQUENTIAL DAMAGES ARISING OUT OF, OR AS THE RESULT OF, THE SALE, DELIVERY, NON-DELIVERY, SERVICING, USE OR LOSS OF USE OF THE PRODUCTS OR ANY PART THEREOF, OR FOR ANY CHARGES OR EXPENSES OF ANY NATURE INCURRED WITHOUT SELLER'S WRITTEN CONSENT, EVEN IF SELLER HAS BEEN NEGLIGENT, WHETHER IN CONTRACT, TORT OR OTHER LEGAL THEORY. IN NO EVENT SHALL SELLER'S LIABILITY UNDER ANY CLAIM MADE BY BUYER EXCEED THE PURCHASE PRICE OF THE PRODUCTS.

7. User Responsibility. The user, through its own analysis and testing, is solely responsible for making the final selection of the system and Product and assuring that all performance, endurance, maintenance, safety and warning requirements of the application are met. The user must analyze all aspects of the application and follow applicable industry standards and Product information. If Seller provides Product or system options, the user is responsible for determining that such data and specifications are suitable and sufficient for all applications and reasonably foreseeable uses of the Products or systems.

8. Loss to Buyer's Property. Any designs, tools, patterns, materials, drawings, confidential information or equipment furnished by Buyer or any other items which become Buyer's property, will be considered obsolete and may be destroyed by Seller after two consecutive years have elapsed without Buyer ordering the items manufactured using such property. Seller shall not be responsible for any loss or damage to such property while it is in Seller's possession or control.

9. Special Tooling. A tooling charge may be imposed for any special tooling, including without limitation, dies, fixtures, molds and patterns, acquired to manufacture Products. Such special tooling shall be and remain Seller's property notwithstanding payment of any charges by Buyer. In no event will Buyer acquire any interest in apparatus belonging to Seller which is utilized in the manufacture of the Products, even if such apparatus has been specially converted or adapted for such manufacture and notwithstanding any charges paid by Buyer. Unless otherwise agreed, Seller shall have the right to alter, discard or otherwise dispose of any special tooling or other property in its sole discretion at any time.

10. Buyer's Obligation; Rights of Seller. To secure payment of all sums due or otherwise, Seller shall retain a security interest in the goods delivered and this agreement shall be deemed a Security Agreement under the Uniform Commercial Code. Buyer authorizes Seller as its attorney to execute and file on Buyer's behalf all documents Seller deems necessary to perfect its security interest.

11. Improper use and Indemnity. Buyer shall indemnify, defend, and hold Seller harmless from any claim, liability, damages, lawsuits, and costs (including attorney fees), whether for personal injury, property damage, patent, trademark or copyright infringement or any other claim, brought by or incurred by Buyer, Buyer's employees, or any other person, arising out of: (a) improper selection, improper application or other misuse of Products purchased by Buyer from Seller; (b) any act or omission, negligent or otherwise, of Buyer; (c) Seller's use of patterns, plans, drawings, or specifications furnished by Buyer to manufacture Product; or (d) Buyer's failure to comply with these terms and conditions. Seller shall not indemnify Buyer under any circumstance except as otherwise provided.

12. Cancellations and Changes. Orders shall not be subject to cancellation or change by Buyer for any reason, except with Seller's written consent and upon terms that will indemnify, defend and hold Seller harmless against all direct, incidental and consequential loss or damage. Seller may change product features, specifications, designs and availability with notice to Buyer.

13. Limitation on Assignment. Buyer may not assign its rights or obligations under this agreement without the prior written consent of Seller.

14. Force Majeure. Seller does not assume the risk and shall not be liable for delay or failure to perform any of Seller's obligations by reason of circumstances beyond the reasonable control of Seller (hereinafter "Events of Force Majeure"). Events of Force Majeure shall include without limitation: accidents, strikes or labor disputes, acts of any government or government agency, acts of nature, delays or failures in delivery from carriers or suppliers, shortages of materials, or any other cause beyond Seller's reasonable control.

15. Waiver and Severability. Failure to enforce any provision of this agreement will not waive that provision nor will any such failure prejudice Seller's right to enforce that provision in the future. Invalidation of any provision of this agreement by legislation or other rule of law shall not invalidate any other provision herein. The remaining provisions of this agreement will remain in full force and effect.

16. Termination. Seller may terminate this agreement for any reason and at any time by giving Buyer thirty (30) days written notice of termination. Seller may immediately terminate this agreement, in writing, if Buyer: (a) commits a breach of any provision of this agreement (b) appointments a trustee, receiver or custodian for all or any part of Buyer's property (c) files a petition for relief in bankruptcy on its own behalf, or by a third party (d) makes an assignment for the benefit of creditors, or (e) dissolves or liquidates all or a majority of its assets.

17. Governing Law. This agreement and the sale and delivery of all Products hereunder shall be deemed to have taken place in and shall be governed and construed in accordance with the laws of the State of Ohio, as applicable to contracts executed and wholly performed therein and without regard to conflicts of laws principles. Buyer irrevocably agrees and consents to the exclusive jurisdiction and venue of the courts of Cuyahoga County, Ohio with respect to any dispute, controversy or claim arising out of or relating to this agreement.

18. Indemnity for Infringement of Intellectual Property Rights. Seller shall have no liability for infringement of any patents, trademarks, copyrights, trade dress, trade secrets or similar rights except as provided in this Section. Seller will defend and indemnify Buyer against allegations of infringement of U.S. patents, U.S. trademarks, copyrights, trade dress and trade secrets ("Intellectual Property Rights"). Seller will defend at its expense and will pay the cost of any settlement or damages awarded in an action brought against Buyer based on an allegation that a Product sold pursuant to this Agreement infringes the Intellectual Property Rights of a third party. Seller's obligation to defend and indemnify Buyer is contingent on Buyer notifying Seller within ten (10) days after Buyer becomes aware of such allegations of infringement, and Seller having sole control over the defense of any allegations or actions including all negotiations for settlement or compromise. If a Product is subject to a claim that it infringes the Intellectual Property Rights of a third party, Seller may, at its sole expense and option, procure for Buyer the right to continue using the Product, replace or modify the Product so as to make it noninfringing, or offer to accept return of the Product and return the purchase price less a reasonable allowance for depreciation. Notwithstanding the foregoing, Seller shall have no liability for claims of infringement based on information provided by Buyer, or directed to Products delivered hereunder for which the designs are specified in whole or part by Buyer, or infringements resulting from the modification, combination or use in a system of any Product sold hereunder. The foregoing provisions of this Section shall constitute Seller's sole and exclusive liability and Buyer's sole and exclusive remedy for infringement of Intellectual Property Rights.

19. Entire Agreement. This agreement contains the entire agreement between the Buyer and Seller and constitutes the final, complete and exclusive expression of the terms of sale. All prior or contemporaneous written or oral agreements or negotiations with respect to the subject matter are herein merged.

20. Compliance with Law, U.K. Bribery Act and U.S. Foreign Corrupt Practices Act. Buyer agrees to comply with all applicable laws and regulations, including both those of the United Kingdom and the United States of America, and of the country or countries of the Territory in which Buyer may operate, including without limitation the U. K. Bribery Act, the U.S. Foreign Corrupt Practices Act ("FCPA") and the U.S. Anti-Kickback Act (the "Anti-Kickback Act"), and agrees to indemnify and hold harmless Seller from the consequences of any violation of such provisions by Buyer, its employees or agents. Buyer acknowledges that they are familiar with the provisions of the U. K. Bribery Act, the FCPA and the Anti-Kickback Act, and certifies that Buyer will adhere to the requirements thereof. In particular, Buyer represents and agrees that Buyer shall not make any payment or give anything of value, directly or indirectly to any governmental official, any foreign political party or official thereof, any candidate for foreign political office, or any commercial entity or person, for the purpose of influencing such person to purchase products or otherwise benefit the business of Seller.

WARNING

This product can expose you to chemicals including lead and DEHP, which are known to the State of California to cause cancer, and birth defects or other reproductive harm. For more information go to www.p65warnings.ca.gov

Parker Hannifin Corporation
Pump & Motor Division
Greeneville, Tennessee, USA

Notes

Parker

⚠ **WARNING**

This product can expose you to chemicals including lead and DEHP, which are known to the State of California to cause cancer, and birth defects or other reproductive harm. For more information go to www.p65warnings.ca.gov

Parker Hannifin Corporation
6035 Parkland Blvd.
Cleveland, Ohio 44124-4141
Telephone: (216) 896-3000
Fax: (216) 896-4000
www.parker.com

Parker Hannifin Corporation

About Parker Hannifin Corporation

Parker Hannifin is a leading global motion-control company dedicated to delivering premier customer service. A Fortune 500 corporation listed on the New York Stock Exchange (PH), our components and systems comprise over 1,400 product lines that control motion in some 1,000 industrial and aerospace markets. Parker is the only manufacturer to offer its customers a choice of hydraulic, pneumatic, and electromechanical motion-control solutions. Our Company has the largest distribution network in its field, with over 7,500 distributors serving nearly 400,000 customers worldwide.

Parker's Charter

To be a leading worldwide manufacturer of components and systems for the builders and users of durable goods. More specifically, we will design, market and manufacture products controlling motion, flow and pressure. We will achieve profitable growth through premier customer service.

Product Information

North American customers seeking product information, the location of a nearby distributor, or repair services will receive prompt attention by calling the Parker Product Information Center at our toll-free number: 1-800-C-PARKER (1-800-272-7537). In Europe, call 00800-C-PARKER-H (00800-2727-5374).

The Aerospace Group is a leader in the development, design, manufacture and servicing of control systems and components for aerospace and related high-technology markets, while achieving growth through premier customer service.





The Climate & Industrial Controls Group designs, manufactures and markets system-control and fluid-handling components and systems to refrigeration, air-conditioning and industrial customers worldwide.

The Fluid Connectors Group designs, manufactures and markets rigid and flexible connectors, and associated products used in pneumatic and fluid systems.





The Seal Group designs, manufactures and distributes industrial and commercial sealing devices and related products by providing superior quality and total customer satisfaction.

The Hydraulics Group designs, produces and markets a full spectrum of hydraulic components and systems to builders and users of industrial and mobile machinery and equipment.





The Filtration Group designs, manufactures and markets quality filtration and clarification products, providing customers with the best value, quality, technical support, and global availability.

The Automation Group is a leading supplier of pneumatic and electromechanical components and systems to automation customers worldwide.





The Instrumentation Group is a global leader in the design, manufacture and distribution of high-quality critical flow components for worldwide process instrumentation, ultra-high-purity, medical and analytical applications.

⚠ WARNING
This product can expose you to chemicals including lead and DEHP, which are known to the State of California to cause cancer, and birth defects or other reproductive harm. For more information go to www.p65warnings.ca.gov

Parker Hannifin Corporation
Pump & Motor Division
Greeneville, Tennessee, USA

Parker Hydraulics International Sales Offices

North America

Hydraulics Group Headquarters
6035 Parkland Boulevard
Cleveland, OH 44124-4141 USA
Tel: 216-896-3000
Fax: 216-896-4031

Parker Hannifin Canada Division
160 Chisholm Drive Milton
Ontario, Canada L9T 3G9
Tel: 905-693-3000
Fax: 905-876-1958

Mexico

Parker Hannifin de México
Industrial Hydraulic Sales
Eje Uno Norte No. 100
Parque Industrial Toluca 2000
Toluca, Edo. de Mexico CP 50100
Tel: 52 72 2275 4200
Fax: 52 72 2279 9308

Parker Hannifin de México
Mobile Hydraulic Sales
Via de FFCC a Matamoraos 730
Apodaca, NL CP de Mexico 66600
Tel: 52 81 8156 6000
Fax: 52 81 8156 6068

Europe

Hydraulics Group Headquarters
La Tuilière 6
1163 Etoy - Switzerland
Tel: 41 21 821 8500
Fax: 41 21 821 8580

South Africa

Parker Hannifin Africa Pty Ltd
P.O. Box 1153
ZA-Kempton Park 1620,
Republic of South Africa
Tel: 27 11 961 0700
Fax: 27 11 392 7213

Mobile Sales

Mobile Sales Organization and Global Sales
850 Arthur Avenue
Elk Grove Village, IL 60007 USA
Tel: 847-258-6200
Fax: 847-258-6299

Industrial Sales

Central Region
1042 Maple Avenue
Unit 331
Lisle, IL 60532 USA
Tel: 630-964-0796

Great Lakes Region
6035 Parkland Boulevard
Cleveland, OH 44124-4141 USA
Tel: 216-896-2740
Fax: 866-498-7507

Gulf Region
20002 Standing Cypress Drive
Spring, TX 77379 USA
Tel: 817-473-4431
Fax: 888-227-9454

Southwest Region
700 S. 4th Avenue
Mansfield, TX 76063 USA
Tel: 817-473-4431
Fax: 888-227-9454

Mid Atlantic & Southeast Regions
1225 Old Alpharetta Rd
Suite 290
Alpharetta, GA 30005 USA
Tel: 770-619-9767
Fax: 770-619-9806

Midwest Region
8145 Lewis Road
Minneapolis, MN 55427 USA
Tel: 763-513-3535
Fax: 763-544-3418

Northeast Region
P.O. Box 396
Pine Brook, NJ 07058 USA
Tel: 973-227-2565
Fax: 973-227-2467

Northwest Region
6458 North Basin Avenue
Portland, OR 97217 USA
Tel: 503-283-1020
Fax: 866-611-7308

Pacific Region
8460 Kass Drive
Buena Park, CA 90621 USA
Tel: 714-228-2509
Fax: 714-228-2511

Asia Pacific

Parker Hannifin Shanghai Ltd.
280 Yunqiao Road,
Jin Qiao Export Processing Zone
Shanghai 201206, China
Tel: 86 21 2899 5000
Fax: 86 21 6445 9717

Parker Hannifin Hong Kong Ltd.
8/F, Kin Yip Plaza
9 Cheung Yee Street
Cheung Sha Wan, Hong Kong
Tel: 852 2428 8008
Fax: 852 2480 4256

Parker Hannifin Korea Ltd.
9F KAMCO Yangjae Tower
949-3 Dogok1-dong, Gangnam-gu
Seoul, 135-860, Korea
Tel: 82 2 559 0400
Fax: 82 2 556 8187

Parker Hannifin India Pvt Ltd.
Plot No. EL-26, MIDC,
TTC Industrial Area
Mahape, Navi Mumbai, 400 709, India
Tel: 91 22 6513 7081
Fax: 91 22 2768 6841

Parker Hannifin Australia
Parker Hannifin Pty Ltd.
9 Carrington Road
Castle Hill, NSW 2154, Australia
Tel: 612 9634 7777
Fax: 612 9842 5111

Latin America

Parker Hannifin Ind. e Com. Ltda Hydraulics Division
Av. Frederico Ritter, 1100
94930-000 Cachoeirinha RS, Brazil
Tel: 55 51 3470 6090
Fax: 55 51 3470 9281

Parker Hannifin Argentina S.A.I.C.
Stephenson 2711
1667-Tortuguitas-Malvinas Argentinas
Pcia. de Buenos Aires, Argentina
Tel: 54 3327 44 4129
Fax: 54 3327 44 4199

Pan American Division
7400 NW 19th Street, Suite A
Miami, FL 33126 USA
Tel: 305-470-8800
Fax: 305-470-8808

HY13-1590-011/US 2/2019

Parker Hannifin Corporation
Pump & Motor Division
2745 Snapps Ferry Road
Greeneville, TN 37745
phone 423 639 8151
fax 423 787 2418
www.parker.com/pumpmotor