hymatik











CADE
Fast Track Programme
Distribution Catalogue

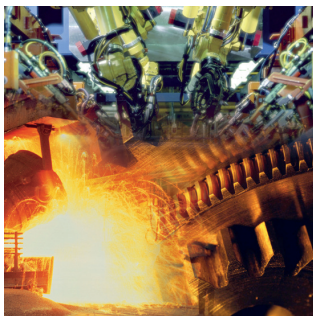

Parker

PTS
Parker Tracking System

ENGINEERING YOUR SUCCESS.

Tel: +45 63 12 83 00 | Email: ps@hymatik.com | www.hymatik.com | Hvidkaervej 27a, DK-5250 Odense SV, Denmark

CADE
Cylinder and Accumulator Division Europe

Made in Europe - serving all markets and industries

Parker CADE UK
Sandycroft, (Chester)

Parker CADE France
Colombes

Parker CADE Italy
Arsago & Turin



Parker CADE Sweden
Falköping

Parker CADE Poland
Wroclaw

Parker CADE Germany
Cologne

www.parker/acde

Our product range - click for more detail:


Bladder Accumulators


Piston Accumulators


Diaphragm Accumulators


Pulsation Dampers


Attenuators


Gas Bottles


Accessories


Air-Oil Cooler



Water-Oil Cooler


QPM Pump


Industrial Hydraulic Cylinders


Mill-type Cylinders



Helical Actuators


Lightraulics®

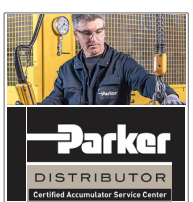

Service Center


Services & Support

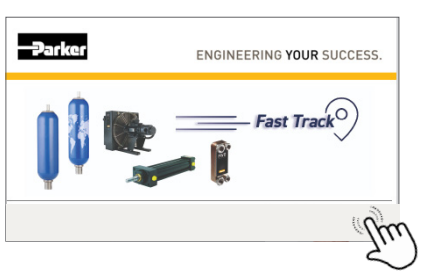

Tel: +45 63 12 83 00 | Email: ps@hymatik.com | www.hymatik.com | Hvidkaervej 27a, DK-5250 Odense SV, Denmark

Contents

ACCUMULATORS

Bladder Accumulators

EHV Series Bladder Accumulators	6
EHV Spare Parts/ Bladder Kit	10
Accumulator Kit - Bladder Accumulator + Clamp + Bracket + Safety Block	11
Global Bladder Accumulator - SELO + ASME + CE approvals	12

Accessories

Clamps & Brackets	14
Charging Sets	14
NEW **SensoNode - Pre-Charge Checking Tool**	**15**
Safety Blocks	16
Pressure Relief Valve Block	17
Adapters	18
Gas Bottles	19
How to size an accumulator	20

COOLERS

Air Oil Coolers

Air Oil Coolers with AC Motor - LAC Series	22
Air Oil Coolers with DC Motor - LDC Series	24
Air Oil Coolers with AC Motor & Pump - LOC Series	26

Water Oil Coolers

Brazed Plate Water Oil Cooler - PWO Series	28

Pumps

Gerotor Pump - QPM3 Series	29
NEW **Quiet Air Oil Coolers with AC Motor - QAC Series**	**31**
Online Support	32
How to Size a Cooler - new app available!	33

CYLINDERS

Industrial Hydraulic Cyinders

NEW **HMIF**	35

If you are using the electronic version of this catalogue this icon will take you back to this CONTENT page upon clicking.

Parker declares that all products featured in this catalogue conform to REACH and RoHS regulations.

REACH compliant

RoHS compliant

Tel: +45 63 12 83 00 | Email: ps@hymatik.com | www.hymatik.com | Hvidkaervej 27a, DK-5250 Odense SV, Denmark

PHconnect

Fast Track

2 day despatch

For all products featured in this catalogue*.

Only when ordered via PHconnect or EDI. See specific products for max. capacity.
Exception: Global Bladder Accumulator and QAC Series.

This **Fast Track Distribution Catalogue** only features products that are available at fast dispatch times and has been specially developed for Parker Distributors in Europe, Middle East and Africa.

At Parker we understand your need for easy ordering and fast shipping. All departments are committed to promote your success, and we don't compromise in our joined effort to offer you premium products at an extremely fast despatch time.

Please note that the stated despatch time is guaranteed only when you're using PHconnect or EDI to place your order.

If you are interested in the complete range of our accumulators and coolers series please see the respective catalogues in our library

Or refer to our website:
www.parker.com/acde

A more extensive range of products for use in all countries, as well as other industry specific approvals is available on the Parker website and within the respective product catalogues.





*except for QAC

Tel: +45 63 12 83 00 | Email: ps@hymatik.com | www.hymatik.com | Hvidkaervej 27a, DK-5250 Odense SV, Denmark





2 day despatch







Accumulators

Bladder Accumulators
and Accessories

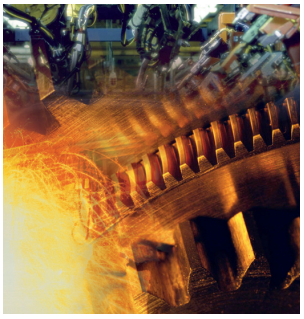

Tel: +45 63 12 83 00 | Email: ps@hymatik.com | www.hymatik.com | Hvidkaervej 27a, DK-5250 Odense SV, Denmark

2 day despatch
Max Pre-charge **150 bar**
Max qty **5 units**

Bladder Accumulator EHV Series - C & D gas valve

The EHV bladder accumulator is designed for high pressure hydraulic systems.
- Standard version (Carbon Steel shell/NBR mix) compatible with mineral oils.
- Conforms to PED 2014/68/EU, EN 14359, Fluid Group 2.

Part number	Type	Valve	Clamps	Support Bracket	Effective Gas volume Litres	Max. Working pressure (PS) bar	Admissible Accumulator Temperature min/max (°C)	Weight kg	Dimensions in mm			Seal O-ring
			Model (quantity) Part number	Model Part number					A max Height	øD	G	
10876301120	EHV 0.2-350/00-A20AD-200*	D	A56 (1) 20149203625		0,17	350	- 6/+80	2,5	268	58	G ½"	18x2
10876401125	EHV 0.5-350/00-A25BD-200*	D	E95 (1) 20250803648		0,6	350	- 20/+80	3	260	91	G ¾"	21,3x2,4
10845601125	EHV 1-350/00-A25BC-200*	C	E114 (1) 20251003648	CE 89 20151903620	1	350	- 20/+80	6	330	116	G ¾"	21,3x2,4
10998301125	EHV 1.6-350/90-A25BC-200	C	E114 (1) 20251003648	CE 89 20151903620	1,6	350	- 20/+80	8	442	116	G ¾"	21,3x2,4
10854701125	EHV 2.5-350/90-A25DC-200	C	E114 (2) 20251003648	CE 89 20151903620	2	350	- 20/+80	11	549	116	G 1 ¼"	36,2x3
10845401125	EHV 4-350/90-A25DC-200	C	E168 (1) 20251303648	CE108 20118703620	3,7	350	- 20/+80	15	434	170	G 1 ¼"	36,2x3
10861201125	EHV 5-350/90-A25DC-200	C	E114 (2) 20251003648	CE 89 20151903620	5	350	- 20/+80	17	898	116	G 1 ¼"	36,2x3
10857401125	EHV 6-350/90-A25DC-200	C	E168 (2) 20251303648	CE108 20118703620	6,0	350	- 20/+80	20	560	170	G 1 ¼"	36,2x3
10859701125	EHV 10-350/90-A25DC-200	C	E168 (2) 20251303648	CE108 20118703620	10	350	- 20/+80	31	825	170	G 1 ¼"	36,2x3

*According to Article 4.3 PED 2014/68/EU

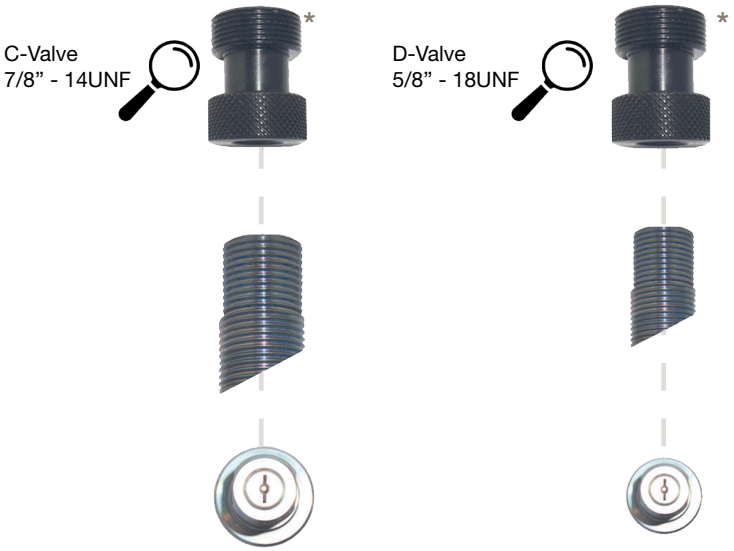

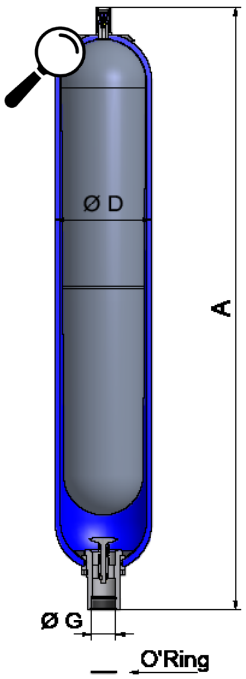

Parker Hannifin
Cylinder and Accumulator Division Europe
* not included

Bladder Accumulator EHV Series- A gas valve

The EHV bladder accumulator is designed for high pressure hydraulic systems.
- Standard version (Carbon Steel shell/NBR mix) compatible with mineral oils.
- Conforms to PED 2014/68/EU, EN 14359, Fluid Group 2.

Part number	Type	Valve	Clamps	Support Bracket	Effective Gas volume Litres	Max. Working pressure (PS) bar	Admissible Accumulator Temperature min/max (°C)	Weight kg	Dimensions in mm			Seal O-ring
			Model (quantity) Part number	Model Part number					A max Height	øD	G	
10837001125	EHV 10-330/90-A25GA-200	A	D226 (2) 20251503648	CE159A 20109003620	9,2	330	-20/+80	31	587	226	G2"	54x3
10867101125	EHV 12-330/90-A25GA-200	A	D226 (2) 20251503648	CE159A 20109003620	11	330	-20/+80	36	687	226	G2"	54x3
10837101125	EHV 20-330/90-A25GA-200	A	D226 (2) 20251503648	CE159A 20109003620	17,8	330	-20/+80	49	897	226	G2"	54x3
10837201125	EHV 24,5-330/90-A25GA-200	A	D226 (2) 20251503648	CE159A 20109003620	22,5	330	-20/+80	56	1032	226	G2"	54x3
10837301125	EHV 32-330/90-A25GA-200	A	D226 (2) 20251503648	CE159A 20109003620	32	330	-20/+80	81	1420	226	G2"	54x3
11076701125	EHV 50-330/90-A25GA-200	A	D226 (2) 20251503648	CE159A 20109003620	48,5	330	-20/+80	110	1936	226	G2"	54x3

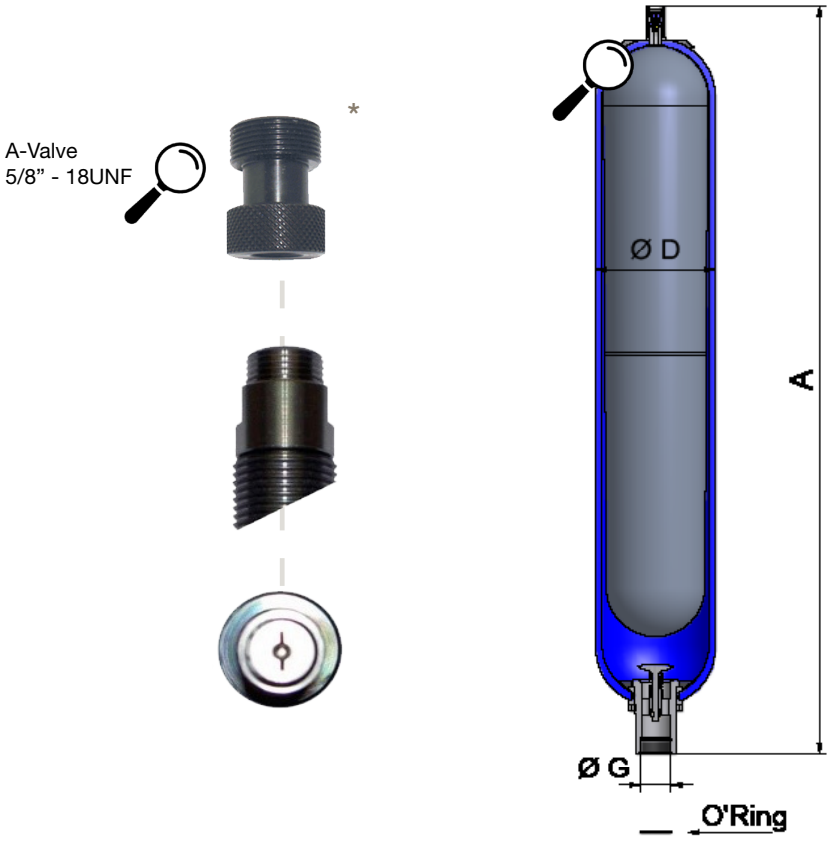

* not included

Bladder Accumulator EHV Series - B gas valve

The EHV bladder accumulator is designed for high pressure hydraulic systems.
- Standard version (Carbon Steel shell/NBR mix) compatible with mineral oils.
-Conforms to PED 2014/68/EU, EN 14359, Fluid Group 2.

Part number	Type	Valve	Clamps	Support Bracket	Effective Gas volume Litres	Max. Working pressure (PS) bar	Admissible Accumulator Temperature min/max (°C)	Weight kg	Dimensions in mm			Seal O-ring
			Model (quantity) Part number	Model Part number					A max Height	øD	G	
10866901125	EHV 1-350/00-A25BB-200*	B	E114 (1) 20251003648	CE 89 20151903620	1	350	- 20/+80	6	330	116	G ¾"	21,3x2,4
10866101125	EHV 4-350/90-A25DB-200	B	E168 (1) 20251303648	CE108 20118703620	3,7	350	- 20/+80	15	434	170	G 1 ¼"	36,2x3
10865401125	EHV 10-330/90-A25GB-200	B	D226 (2) 20251503648	CE159A 20109003620	9,2	330	-20/+80	31	587	226	G2"	54x3
10865501125	EHV 20-330/90-A25GB-200	B	D226 (2) 20251503648	CE159A 20109003620	17,8	330	-20/+80	49	897	226	G2"	54x3
10865701125	EHV 32-330/90-A25GB-200	B	D226 (2) 20251503648	CE159A 20109003620	32	330	-20/+80	81	1420	226	G2"	54x3
11076801125	EHV 50-330/90-A25GB-200	B	D226 (2) 20251503648	CE159A 20109003620	48,5	330	-20/+80	110	1936	226	G2"	54x3

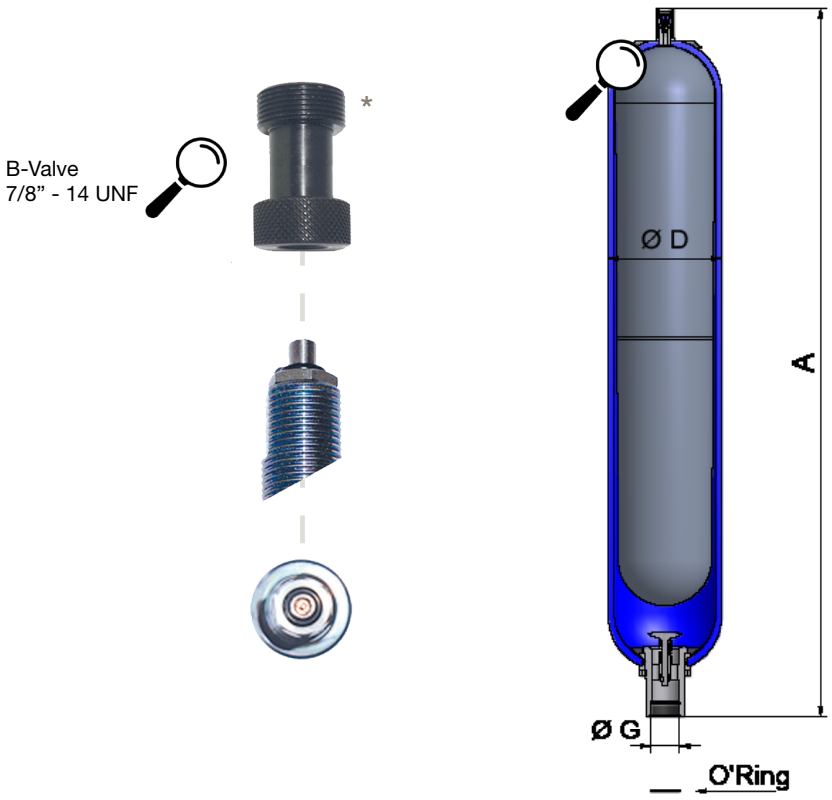

* not included

2 day despatch
Max Pre-charge **150 bar**
Max qty **5 units**

Bladder Accumulator UK Series - F gas valve

Standard version (Carbon Steel shell/NBR mix) compatible with mineral oils.
Conforms to PED 2014/68/EU, EN14359, Fluid Group 2
Fluid Port Seal Arrangement - Bonded Seal Type

Part number	Type	Valve	Clamps	Support Bracket	Effective Gas volume Litres	Max. Working pressure (PS) bar	Admissible Accumulator Temperature min/max (°C)	Weight kg	Dimensions in mm			Bonded Seal (BS Standard)
			Part number	Model Part number					A max Height	øD	G	
11278001125	EHV 1-350/00-A25WF-200*	F	20251003648	20151903620	1	350	-20°c to +80°C	6	330	116	G 3/4"	G 3/4"
11278101125	EHV 2.5-350/90-A25VF-200	F	20251003648	20151903620	2.5	350	-20°c to +80°C	11	549	116	G 1 1/4"	G 1 1/4"
11278201125	EHV 4-350/90-A25VF-200	F	20251303648	20118703620	4	350	-20°c to +80°C	15	455	169	G 1 1/4"	G 1 1/4"
11278301125	EHV 10-350/90-A25UF-200	F	20251503648	20109003620	10	350	-20°c to +80°C	32	575	226	G 2"	G 2"
11278401125	EHV 20-350/90-A25UF-200	F	20251503648	20109003620	20	350	-20°c to +80°C	51	886	226	G 2"	G 2"
11278501125	EHV 32-350/90-A25UF-200	F	20251503648	20109003620	32	350	-20°c to +80°C	84	1407	226	G 2"	G 2"
11278601125	EHV 50-350/90-A25UF-200	F	20251503648	20109003620	50	350	-20°c to +80°C	114	1922	226	G 2"	G 2"

*According to Article 4.3 PED 2014/68/EU

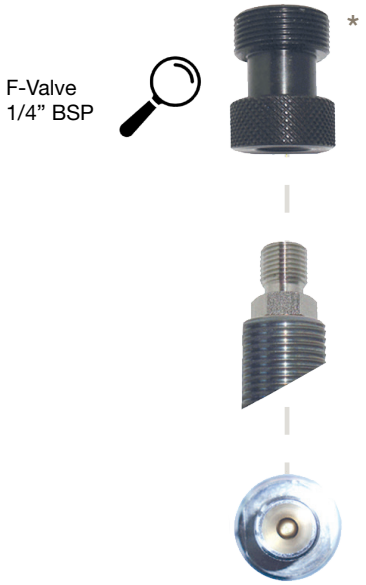

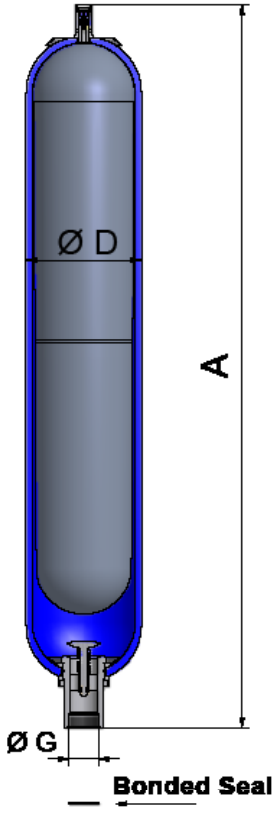

* not included

Spare Parts

Item	Spare parts
1	Spare Parts Kit
2	Valve nut
3	Gas valve Assembly
3.1	Gas valve
3.2	Gas valve plug
4	Anti-extrusion ring
5	Fluid port seal
6	Back up seal ring

Item	Spare parts
7*	Spacer
8*	Locking nut
9	O-ring fluid port
10	Back up ring (depending on the model)
11	Bladder

*These parts are not delivered in the spare parts kit (complete repair kit)

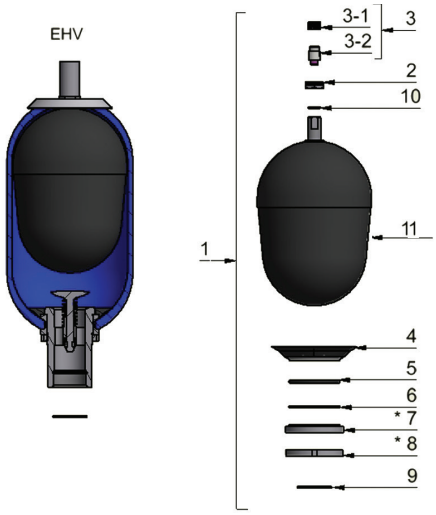

Bladder Kit

Parker Olaer offer genuine parts for the maintenance of hydraulic accumulators.

Part Number	Type	Accumulator volume	Ø steam valve	Gas Valve type
19029700225	KIT EHV 1-350 DIA22 VALVE C	1 L	22 mm	C
19029800225	KIT EHV 2.5-350 DIA22 VALVE C	2,5 L	22 mm	C
19036600225	KIT EHV 4-350 DIA22 VALVE B	4 L	22 mm	B
19029900225	KIT EHV 4-350 DIA22 VALVE C	4 L	22 mm	C
19030100225	KIT EHV 6-350 DIA 22 VALVE C	6 L	22 mm	C
19030200225	KIT EHV 10-350 DIA22 VALVE C	10 L (long)	22 mm	C
19028900225	KIT EHV 10-330 DIA22 VALVE A	10 L	22 mm	A
19029000225	KIT EHV 20-330 DIA22 VALVE A	20 L	22 mm	A
19036000225	KIT EHV 20-330 DIA22 VALVE B	20 L	22 mm	B
19029100225	KIT EHV 32-330 DIA22 VALVE A	32 L	22 mm	A
19036100225	KIT EHV 32-330 DIA22 VALVE B	32 L	22 mm	B
19054100225	KIT EHV 50-330 DIA22 VALVE A	50 L	22 mm	A
19054200225	KIT EHV 50-330 DIA22 VALVE B	50 L	22 mm	B
19040800225	KIT EHV 20-250/330 DIA 50 VALVE A	20 L	50 mm	A
19041000225	KIT EHV 32-250/330 DIA 50 VALVE A	32 L	50 mm	A
19029200225	KIT EHV 50-250-330 DIA50 VALVE A	50 L	50 mm	A

2 day despatch
Max qty- 1 unit

Accumulator Set

Parker Olaer have developed an Accumulator Set which is easy to install and easy to order.
- Based on standard accumulator products, according to PED2014/68/EU, EN 14359 Fluid Group 2
- Temperature range -20°C to +80°C
- Safety Block: Includes pressure relief valve sealed, CE marked by BV

Accumulator Set Part Number	Nominal Volume (V0)	Maximum Pressure (PS)	accumulator	clamps	Clamps Qty	Bracket	Safety block	Process connection
04323001125	2,5	350	10854701125	20251003648	1	20151903620	35128811Y02	3/4" BSP
04323101125	4	350	10845401125	20251303648	1	20118703620	35128811Y02	3/4" BSP
04323201125	6	350	10857401125	20251303648	1	20118703620	35128811Y02	3/4" BSP
04323301125	10	350	10859701125	20251303648	2	20118703620	35128811Y02	3/4" BSP
04323401125	10	330	10837001125	20251503648	1	20109003620	35128813J02	3/4" BSP
04323501125	10	330	10837001125	20251503648	1	20109003620	35129013J02	1"-1/4 SAE 6000
04323601125	20	330	10837101125	20251503648	2	20109003620	35129013J02	1"-1/4 SAE 6000
04323701125	32	330	10837301125	20251503648	2	20109003620	35129013J02	1"-1/4 SAE 6000
04323801125	50	330	11076701125	20251503648	2	20109003620	35129013J02	1"-1/4 SAE 6000

The accumulator set will be delivered in a single shipment | Accumulator pre charge at 150 Bar Nitrogen (P0) | Refer to catalogue for clamps quantity advice (additional clamps may be ordered seperately)

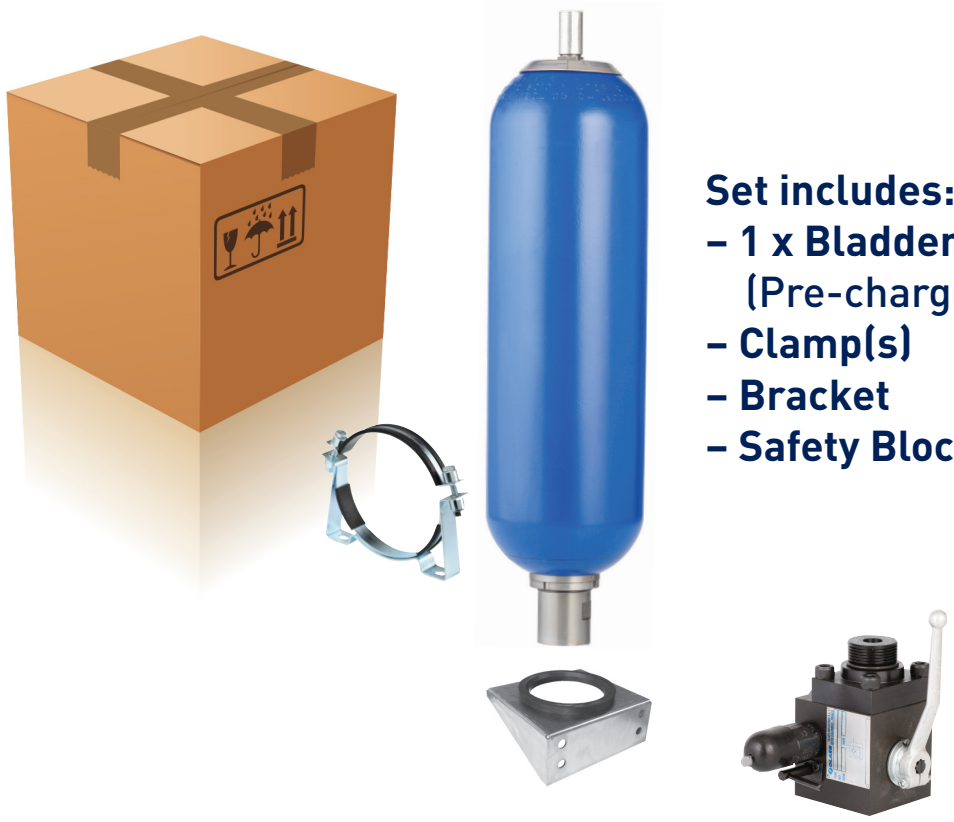

Set includes:
- 1 x Bladder Accumulator (Pre-charged 150 bar)
- Clamp(s)
- Bracket
- Safety Block

Tel: +45 63 12 83 00 | Email: ps@hymatik.com | www.hymatik.com | Hvidkaervej 27a, DK-5250 Odense SV, Denmark

2 week despatch
Max qty- 1 box

Global Bladder Accumulator

The Parker Global Accumulator offers multi-international certification (SELO, ASME & CE) as well as improved technology and design.

- Certification CE 350 bar / ASME 3800 psi + GB 280 Mpa only for 32L and 50L (SELO)
- Carbon steel components / Mix 25 bladder
- Standard RAL5005 epoxy painting 30-50µm
- G2" "DA" fluidport (maximum flow rate = 1200 L/min) ; Gas valve B
- Standard RAL5005 epoxy painting 30-50µm
- No precharge
- English/German/Chinese name plate with double units (SI / USA)
- Name plate ready for PTS label
- Special packaging (box quantity - refer to table below)

Part Number	Description	Gas valve design	Effective Volume (Litres)	Pressure (PS)	DA fluid port connection	Box quantity
09504401125	EHV 10-350/94-A25HB-238	B	9,2	CE : 350 Bar ASME : 3800 psi (262 Bar) This volume is out of the SELO scope	DA G2"	9
09504601125	EHV 20-350/94-A25HB-238	B	17,8	CE : 350 Bar ASME : 3800 psi (262 Bar) This volume is out of the SELO scope	DA G2"	9
09504801125	EHV 32-350/86-A25HB-238	B	32	CE : 350 Bar ASME : 3800 psi (262 Bar) SELO (according to GB/T-20663-2006) : 280 bar	DA G2"	6
09505001125	EHV 50-350/86-A25HB-238	B	47,5	CE : 350 Bar ASME : 3800 psi (262 Bar) SELO (according to GB/T-20663-2006) : 280 bar	DA G2"	6

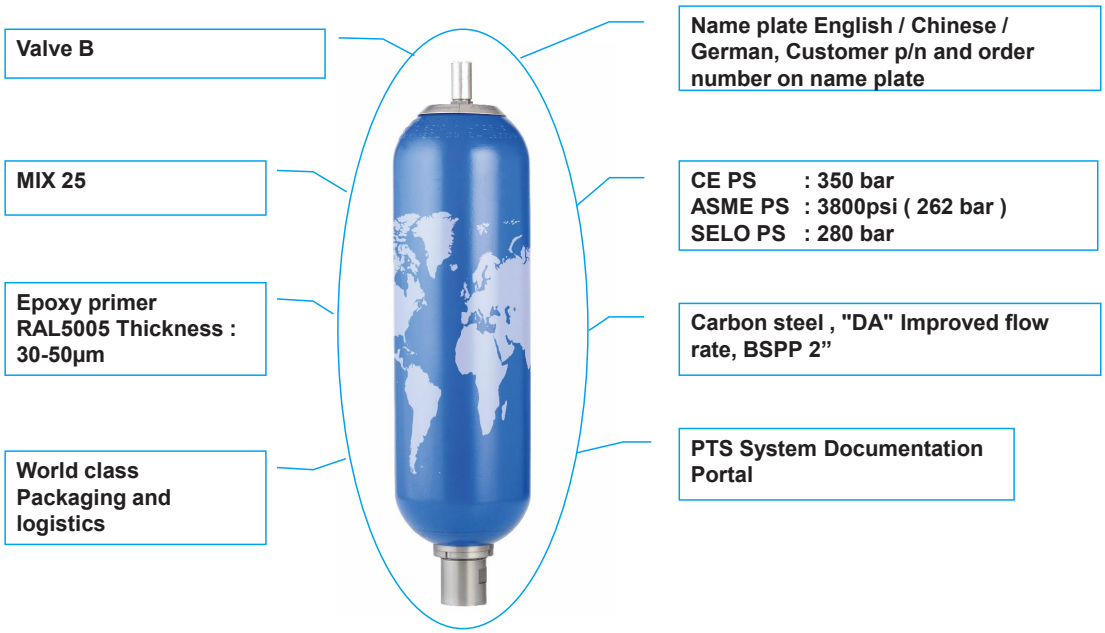

Distributor goes Certified Service Center

Parker Certified Service Centers have been established with certified Parker distributors to optimise customer systems by combining industry leading products backed by quality service, to deliver stressfree accumulator management alongside maximised performance, efficiency and safety.

With locations across Europe,
Certified Service Centers offer an integrated solution that combines products, services and technologies, whether on an inhouse at the Service Center),mobile or onsite basis.

With regard to the use of original spare parts, tangible benefits include shorter inspection time and the reduction of complexity in logistics (tracking systems,data monitoring and recording)and documentation, both of which help to lower costs and save time.
Certfified Service Centers can utilize the Parker Tracking System (PTS) which helps schedule accumulator maintenance, providing automated notifications on inspections and replacement parts.

Safety First - Reduced risk of accidents and protection for your employees by:

- Utilizing engineers with expert product knowledge in technology and regulation.

Reduced down time and increased productivity through:

- Warranty validation and preventative maintenance to increase reliability
- Reduction of inspection time
- Implementation of preventative maintenance

Reduction in time and costs from:

- Simplified logistics and documentation
- Simplification of administration required to comply with laws and regulations.





In-House Service



Mobile Service
(Engineer will come to you with fully equipped vehicle, spare parts, and test equipment).



On-Site Service
(Engineer will provide expert service even in the most remote location).

Parker
DISTRIBUTOR
Certified Accumulator Service Center

2 day despatch
Max qty- 5 units

Clamps

Parker Olaer Clamps are designed to allow quick and easy installation of hydraulic accumulators.
- Available in carbon and stainless steel
- Steel with zinc plated protection, Rubber EPDM (48) or NBR (25)

Part Number	Description	inlet diameter	Design
20250803648	E95	97-97	E
20250903648	E106	99-109	E
20251003648	E114	112-124	E
20251103648	E136	128-124	E
20251203648	E155	146-157	E
20259003648	E160	155-165	E
20251303648	E168	166-176	E
20251503648	D226	215-226	D

Design E



Design D



Brackets

Parker Olaer Brackets are designed to allow quick and easy installation of accumulators.
- Available in carbon and stainless steel
- Carbon steel zinc plated and NBR cushion ring

Part Number	Description	Bladder Accumulator model
20151903620	CE89	1 to 5 liters
20118703620	CE108	4, 6 , 10 liters
20109003620	CE159A	10 to 50 liters

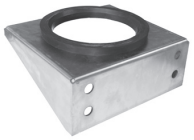

Charging Kits VGU & SC-VGU

The Parker Charging kit is an indispensable instrument for checking, adjusting or filling nitrogen into most of the hydraulic accumulators available on the market.



Part Number	Description	Country	Pressure
20214122823	VGU/F.25/250.8.TS2.3	France	0-250
20214122833	VGU/F.25/250.8.TS3.3	Germany	0-250
20214122893	VGU/F.25/250.8.TS9.3	Netherlands	0-250

Part Number	Description	Country
20270749929	SC-VGU.TM.9.TS2.9	French
20270749939	SC-VGU.TM.9.TS3.9	Germany
20270749989	SC-VGU.TM.9.TS8.9	Italy
20270749999	SC-VGU.TM.9.TS9.9	Netherlands

VGU KIT
- VGU universal tester and pressuriser
- Set of accumulator adaptors (5/8", 7/8", 7/8" long, G1/4", 8V1)
- 1 pressure gauge 0-25 Bar & 1 pressure gauge 0-250 Bar
- Special nitrogen hose (length 2,5 m)
- Nitrogen connection according to country standard

SC-VGU KIT
- VGU universal tester and pressuriser
- 9 Different Adaptors: 7/8"UNF (short), 7/8"UNF (long), 5/8"UNF, 0.302"(8V1), G 1/4", M28x1.5, M16x200, M16x150, 3/4"BSP HEX
- 4 Pressure Gauge: 0 - 6 bar / 0 - 25 bar / 0 - 250 bar / 0 - 400 bar
- 1 Extender Hose for safe operation in tricky spaces
- 1 Gas Flow Limiter to control the initial pre-charge speed
- Nitrogen connection according to country standard
- Robust Case

2 day despatch
Max qty- 3 sets

NEW

SensoNODE Kit for Accumulators

A regular control of the nitrogen pressure allows a durable and efficient operation of the accumulator. The new SensoNode sensor transmits nitrogen pressure / temperature information via a Bluetooth connection to a mobile device (tablet or smartphone) using Scout Mobile Parker application. The purpose of this equipment is to simplify the maintenance of the accumulators by allowing a frequent control of the nitrogen pressure while avoiding dangerous situations for the operator.

PRODUCT FEATURES

Accuracy: 1,5% of the total measuring scale
Temp range: -40°C to +85°C
Measurement cycles: > 1 million
Burst pressure: 3 x working pressure

SAFE

⇨Easy Maintenance
⇨Greater safety for operators

ECONOMIC

⇨Reduced maintenance time
⇨Free Application
⇨Sensor maintenance free

FLEXIBLE

⇨Easy installation on bladder accumulator
⇨Could equip existing or new units

RELIABLE

⇨Battery life time >1 year
⇨More efficient accumulator



Easily follow up on your product's performance via App.

Available for Android and IOS
VOICE OF THE MACHINE

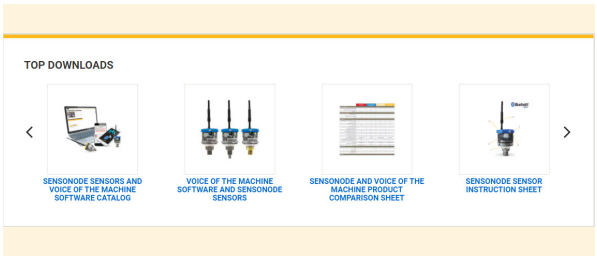

Part Number	Description	Pressur Range
11354000223	SENSONODE CHARGING SET 0-400 B	0-400 Bar

Visit our website for more useful tools and trainings about condition monitoring resources. LINK





INCLUDES

- SensoNODE
- Gas Valve and Accumulator Stem Valve Adaptor

Dimensions
Max Height: 175 mm
Ø: 45 mm + Valve 28 mm
Weight: 530 g

Safety Blocks

Parker Olaer has developed a complete range of Accumulator Safety Blocks for all standard and special applications. An accumulator safety block provides a safe solution for accumulator maintenance and operation.

- Safety blocks delivered assembled
- Minimum Temp: -15°C (except size 10: -10°C) | Maximum Temp: +70°C (except size 16: +80°C)
- Pressure relief valve sealed, delivered with EC declaration of manufacturing conformity
- Also available with electrical drain valve (24 V DC or 110 V AC or 220 V AC)

Safety Block with EC Safety Valve - certified by BV

Part Number	Description	Size	Pressure (Bar)	Accumulator Connection	Process Connection	Image
35172112Y02	DI10MS/2/350CV	10	350	3/4"	G 1/2"	A
35172111Y02	DI10MS/1/350CV	10	350	1"-1/4	G 1/2"	A
35128811Y02	DI16MS/1/350CV	16	350	1"-1/4	G 3/4 "	B
35128813J02	DI16MS/3/330CV	16	330	2"	G 3/4"	B
35129011Y02	DI24MS/1/350CV	24	350	1"-1/4	1-1/4" SAE 6000	D
35129013J02	DI24MS/3/330CV	24	330	2"	1-1/4" SAE 6000	D

Safety Block with EC Safety Valve

Part Number	Description	Size	Pressure (Bar)	Accumulator Connection	Process Connection	Image
FTD.021-1-10333000	DI 10 MS 2-330-BH-000	10	330	Requires Adaptor	G 1/2"	A
FTD.021-2-10333000	DI 20 MS 2-330-BH-000	20	330	Requires Adaptor	G 1"	C

FTD.21-D30102	Adaptor G 3/4"	Adaptors for FTD Safety Blocks
FTD.21-D30103	Adaptor G 1-1/4"	
FTD.21-D30104	Adaptor G 2"	

Image A



Image B



Image C



Image D



Tel: +45 63 12 83 00 | Email: ps@hymatik.com | www.hymatik.com | Hvidkaervej 27a, DK-5250 Odense SV, Denmark

2 day despatch
Max qty- 5 units

Pressure Relief Valve Block

Parker Olaer has developed a complete range of pressure relief valve Blocks for all standard applications. This provides the minimal pressure protection required to protect an accumulator against pressure overboost.
- Pressure relief block delivered assembled; Pressure relief valve sealed delivered with EC certified by BV declaration of manufacturing conformity.

Part Number	Description	Size	Pressure (Bar)	Accumulator Connection	Image
35170933502	SL 16/1/350CV	16	350 B	1"-1/4	A
35170933302	SL 16/1/330CV	16	330 B	1"-1/4	A
35170733302	SL 24/3/330CV	24	330 B	2"	A
35170602502	SD 24/0/250CV	24	250 B	1/2"	B
35170603302	SD 24/0/330CV	24	330 B	1/2"	B

Image A



Image B



Tel: +45 63 12 83 00 | Email: ps@hymatik.com | www.hymatik.com | Hvidkaervej 27a, DK-5250 Odense SV, Denmark

Adaptors

Parker Olaer has developed a complete range of adaptors for all standard fluid ports. The adaptors ensure that you have the right connection according to your network piping.
- Carbon steel plated; also available in stainless steel.

Part Number	Dimension	Design	Sealing system
04555200223	G1-1/4 --> G3/4	A	Seal in angle
04557000223	G2 --> G1	A	Seal in angle
04557100223	G2 --> G1-1/4	A	Seal in angle
04555800223	G 1-1/4 --> G1/2	B	Seal in fluid port
04555900223	G1-1/4 --> G3/4	B	Seal in fluid port
04557800223	G2 --> G3/4	B	Seal in fluid port
04557900223	G2 --> G1	B	Seal in fluid port

Design A - Seal in angle

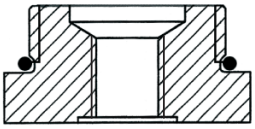

Design B - Seal in fluid port

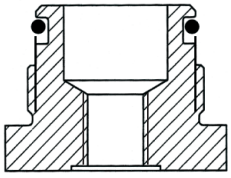

Tel: +45 63 12 83 00 | Email: ps@hymatik.com | www.hymatik.com | Hvidkaervej 27a, DK-5250 Odense SV, Denmark

2 day despatch
Max qty- 5 units

Gas Bottles

Parker Gas Bottles store nitrogen under pressure and provide additional gas volume typically for accumulator systems. The BAWN Gas Bottles without neck are interchangeable and can easily replace an existing unit.
- Cost effective solution for hydraulic systems.
- Conforms to PED 2014/68/EU, EN 14359 and ASME VIII div1 App22. Fluid Group 2.

Part Number	Description	Volume (L)	Pressure (bar)	Dimensions (mm)		Fluid port connection
				A	D	
83101030	BAWN 50.360-207 PED+U NO/NECK 1"1/2-3/4"GAS CIL.	50	360	1615	229	G3/4 & G1-1/2
83101040	BAWN 75.360-207 PED+U NO/NECK 1"1/2-3/4"GAS CIL.	75	360	2280	229	G3/4 & G1-1/2

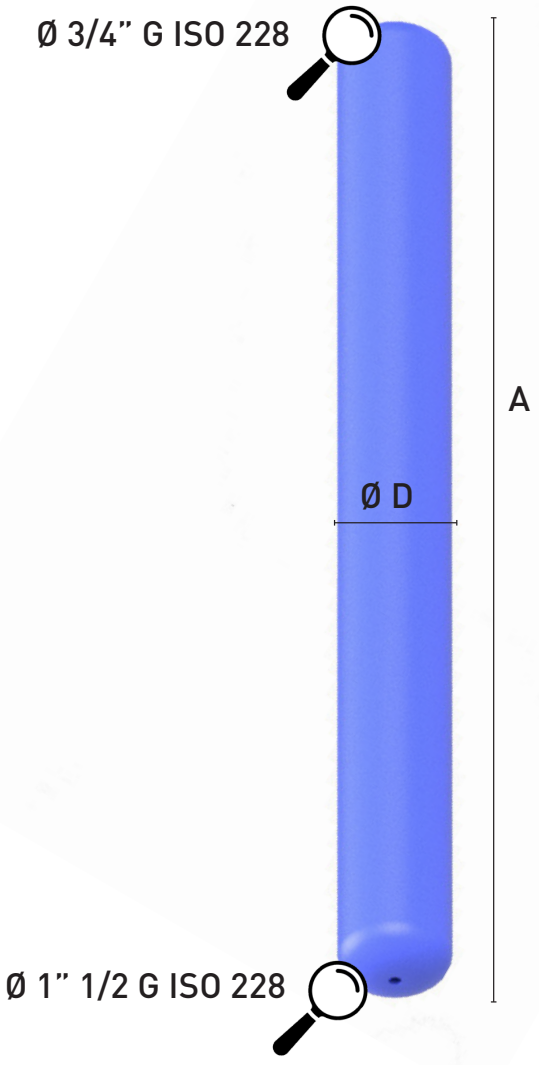

How to size an accumulator

Accumulator Sizing Software

www.parker.com/acde

Parker Olaer has developed very sophisticated simulation software to optimise accumulator sizing recommendations.

Calculations are based on the real gas equation and real gases. The software allows for temperature and flow characteristics and has an intuitive Windows format that is easy to use!



The behaviour of accumulators used in applications such as pulsation dampening, surge arrestor, thermal expansion and energy storage can be simulated.

The latest version of the sizing software can be downloaded from our website.

Sizing Questionnaires

Customers can also complete a sizing questionnaire and send this to the local Parker Sales Office so that the most efficient accumulator can be sized for your application.

You can download the sizing questionnaires from our website or click on the links below if you are viewing a digital version of this document.

There are 4 questionnaires to select from:

1. Energy Storage
2. Thermal Expansion in a closed circuit
3. Surge Arrestor / Waterhammer
4. Pulsation Damper

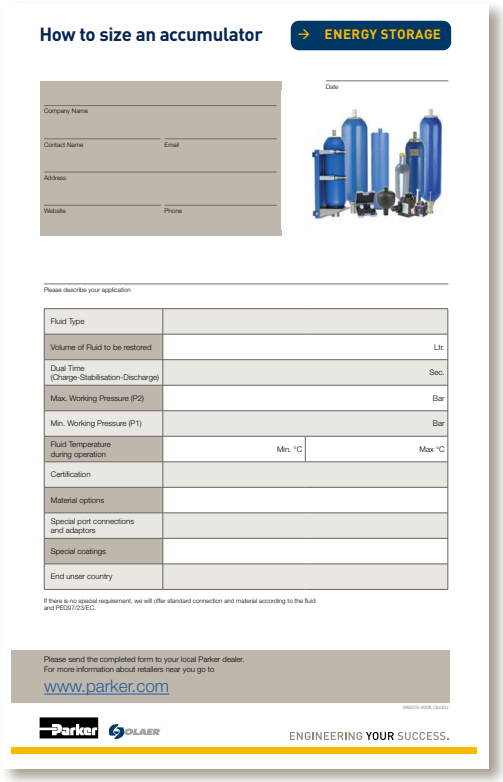
How to size an accumulator

ENERGY STORAGE

Company Name

Contact Name

Email

Address

Website

Phone

Date

Please describe your application

Fluid Type		
Volume of Fluid to be restored		Ltr.
Dual Time (Charge-Stabilisation-Discharge)		Sec.
Max. Working Pressure (P2)		Bar
Min. Working Pressure (P1)		Bar
Fluid Temperature during operation	Min. °C	Max °C
Certification		
Material options		
Special port connections and adaptors		
Special coatings		
End unser country		

If there is no special requirement, we will offer standard connection and material according to the fluid and PED97/23/EC.

Please send the completed form to your local Parker dealer.
For more information about retailers near you go to
www.parker.com

Parker OLAER ENGINEERING YOUR SUCCESS.

DOWNLOAD
sizing software

Tel: +45 63 12 83 00 | Email: ps@hymatik.com | www.hymatik.com | Hvidkaervej 27a, DK-5250 Odense SV, Denmark



2 day despatch





Coolers

Air Oil Coolers, Water Oil Coolers & Pumps



Tel: +45 63 12 83 00 | Email: ps@hymatik.com | www.hymatik.com | Hvidkaervej 27a, DK-5250 Odense SV, Denmark

2 day despatch
Max qty- 3 units

Air Oil Cooler with AC Motor - LAC Series

Suitable for most Industrial applications, the LAC air oil cooler series offers an efficient and robust design and is available in a range of cooling capacities from 1 kW to 300 kW.

Part Number	TYPE	Dimensions (mm)												
		A	B	C	D	E	F	G	H	I	J	K	L	Mø
LAC2-0042DB00000000S0JB0	LAC2-004-2-D-00-000-0-0	267	134	82	256	69	G1	148	90	131	165	222	28	9x14
LAC2-0042DB50000000S0JB0	LAC2-004-2-D-50-000-0-0	267	134	82	256	69	G1	148	90	131	165	222	28	9x14
LAC2-0074DC00000000S0JB0	LAC2-007-4-D-00-000-0-0	365	203	64	395	42	G1	510	160	213	225	429	50	9
LAC2-0074DC50000000S0JB0	LAC2-007-4-D-50-000-0-0	365	203	64	395	42	G1	510	160	213	225	429	50	9
LAC2-0114DC00000000S0JB0	LAC2-011-4-D-00-000-0-0	440	203	62	470	41	G1	510	230	250	249	453	50	9
LAC2-0114DC50000000S0JB0	LAC2-011-4-D-50-000-0-0	440	203	62	470	41	G1	510	230	250	249	453	50	9
LAC2-0164DC00000000S0JB0	LAC2-016-4-D-00-000-0-0	496	203	66	526	46	G1	510	230	278	272	479	50	9
LAC2-0164DC50000000S0JB0	LAC2-016-4-D-50-000-0-0	496	203	66	526	46	G1	510	230	278	272	479	50	9
LAC2-0234AC00000000S0JB0	LAC2-023-4-D-00-000-0-0	580	356	63	610	44	G1	510	305	320	287	511	50	9
LAC2-0234AC50000000S0JB0	LAC2-023-4-D-50-000-0-0	580	356	63	610	44	G1	510	305	320	287	511	50	9
LAC-0334AC00000000S0JB0	LAC-033-4-A-00-000-0-0	692	356	53	722	42	G1¼	510	406	376	318	618	50	9
LAC-0334AC50000000S0JB0	LAC-033-4-A-50-000-0-0	692	356	53	722	42	G1¼	510	406	376	318	618	50	9
LAC-0444AC00000000S0JB0	LAC-044-4-A-00-000-0-0	692	356	53	866	59	G1¼	510	584	448	343	643	50	9
LAC-0444AC50000000S0JB0	LAC-044-4-A-50-000-0-0	692	356	53	866	59	G1¼	510	584	448	343	643	50	9
LAC-0584AC00000000S0JB0	LAC-058-4-A-00-000-0-0	868	508	49	898	43	G2	510	584	464	388	688	30	9
LAC-0584AC50000000S0JB0	LAC-058-4-A-50-000-0-0	868	508	49	898	43	G2	510	584	464	388	688	30	9



PRODUCT BENEFITS

- ⇨ For industrial applications
- ⇨ Cooling capacity up to 300 kW
- ⇨ Robust construction
- ⇨ Low service and maintenance
- ⇨ Wide variety of specifications

For the complete product range see:
www.parker.com

Tel: +45 63 12 83 00 | Email: ps@hymatik.com | www.hymatik.com | Hvidkaervej 27a, DK-5250 Odense SV, Denmark

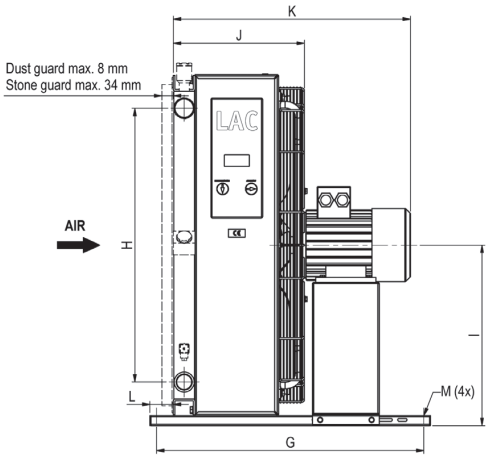

OUTLET
(With by-pass type S)

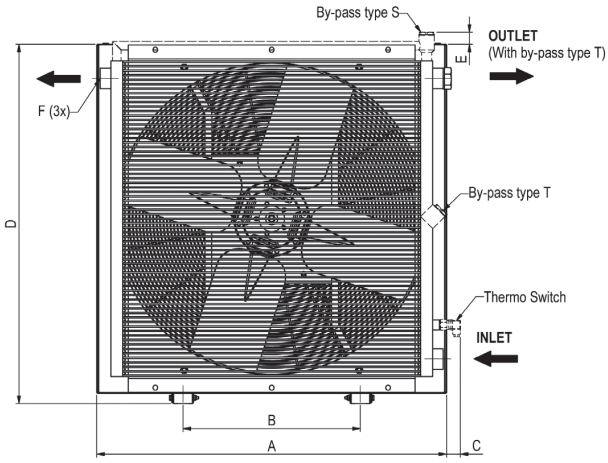

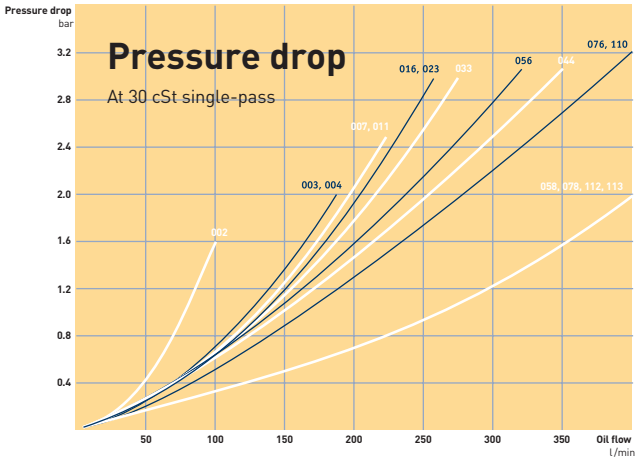

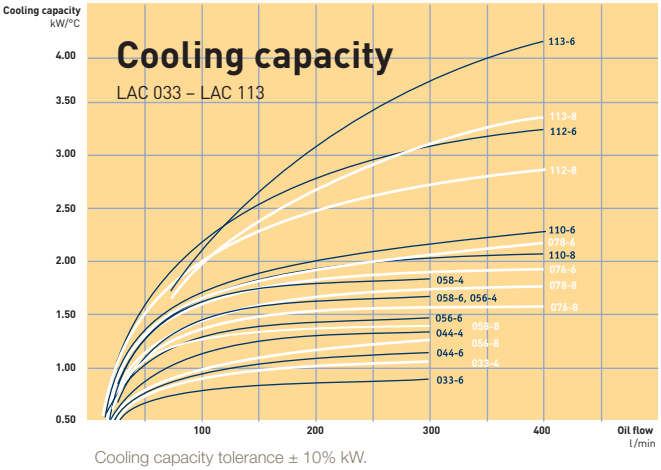

Cooling capacity tolerance ± 10% kW.

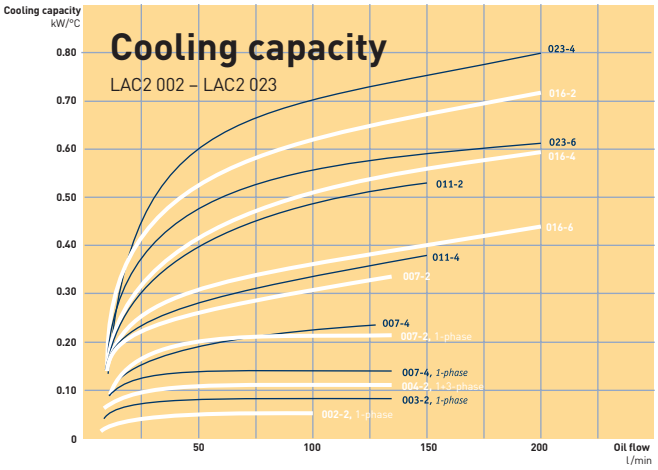

Tel: +45 63 12 83 00 | Email: ps@hymatik.com | www.hymatik.com | Hvidkaervej 27a, DK-5250 Odense SV, Denmark

2 day despatch
Max qty- 3 units

Air Oil Cooler with DC Motor - LDC Series

The LDC air oil cooler series with 12 V or 24 V DC motor is optimized for use in the mobile industry and is available in a range of cooling capacities from 1 kW to 30 kW.

Part Number	TYPE	Dimensions (mm)																Weight kg (approx)	Acoustic Pressure LpA dB(A)1m*
		A	B	C	D	E	F	G	H	I	J	K	L	Mø	N	O	P		
5837007007	LDC-007-B-0-00-000-0-0	330	203	82	345	54	G1	267	160	175	115	178	59	9	-	23	44	9	71
5837007002	LDC-007-B-0-50-000-0-0	330	203	82	345	54	G1	267	160	175	115	178	59	9	-	23	44	9	71
5827011025	LDC-011-B-0-00-000-0-0	400	360	82	396	65	G1	101	230	200	125	218	-	9x29	-	23	44	12	74
5827011002	LDC-011-B-0-50-000-0-0	400	360	82	396	65	G1	101	230	200	125	218	-	9x29	-	23	44	12	74
5827016012	LDC-016-B-0-00-000-0-0	464	416	82	466	63	G1	101	300	235	125	218	-	9x29	-	23	44	15	74
5827016002	LDC-016-B-0-50-000-0-0	464	416	82	466	63	G1	101	300	235	125	218	-	9x29	-	23	44	15	74
5827020002	LDC-020-B-0-00-000-0-0	510	470	35	510	-	G1	101	280	257	125	211	25	9x29	-	23	44	18	77
5827020005	LDC-020-B-0-50-000-0-0	510	470	82	510	-	G1	101	280	257	125	211	25	9x29	-	23	44	18	77
5827023012	LDC-023-B-0-00-000-0-0	615	356	46	635	26	G1	290	305	200	125	218	50	13	455	-	8	25	77
5827023002	LDC-023-B-0-50-000-0-0	615	356	46	635	26	G1	290	305	200	125	218	50	13	455	-	8	25	77
5827033008	LDC-033-B-0-00-000-0-0	635	356	82	678	59	G1¼	290	406	220	165	258	50	13	478	25	49	30	77
5827033002	LDC-033-B-0-50-000-0-0	635	356	82	678	59	G1¼	290	406	220	165	258	50	13	478	25	49	30	77

* = Noise level tolerance ± 3 dB(A)



PRODUCT BENEFITS

- ⇨ For mobile use
- ⇨ Cooling capacity up to 30 kW
- ⇨ Robust construction
- ⇨ Low service and maintenance
- ⇨ Wide variety of specifications

For the complete product range see:
www.parker.com

Tel: +45 63 12 83 00 | Email: ps@hymatik.com | www.hymatik.com | Hvidkaervej 27a, DK-5250 Odense SV, Denmark

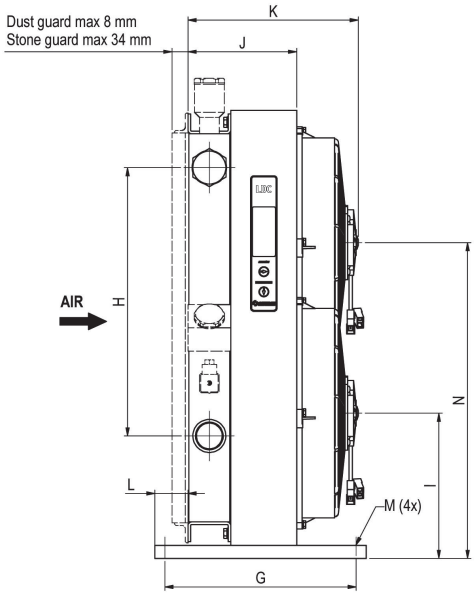

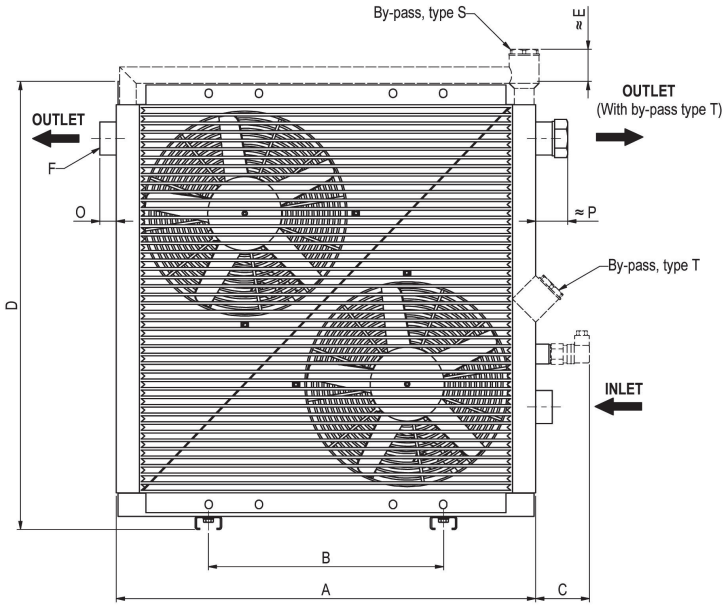

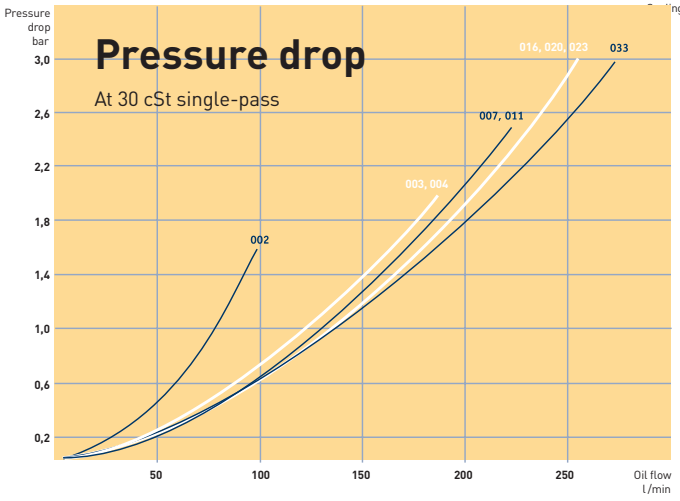

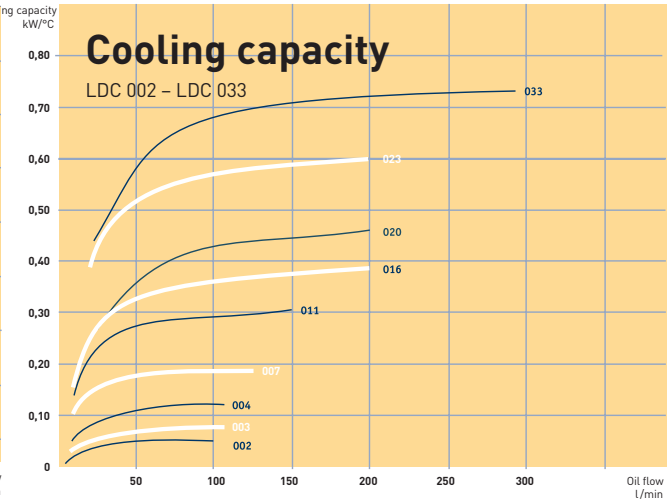

Tolerance Cooling Capacity ± 10% kW.

Tel: +45 63 12 83 00 | Email: ps@hymatik.com | www.hymatik.com | Hvidkaervej 27a, DK-5250 Odense SV, Denmark

Air Oil Cooler with AC Motor & Pump - LOC Series

LOC coolers work as a closed cooling loop. The LOC Air Oil Cooling System with AC-motor and pump provides cooling up to 45 kW. Its robust construction makes it suitable for most applications and environments.

Part Number	TYPE	Dimensions (mm)														
		A	B	C	D	E	F	G	H	I	J	K	L	M	N	O
5849007001	LOC3-007-4-D-A-0-00-000-0-00-0	365	395	602	203	510	Ø9	G1	292	83	214	62	80	50	45	105
5849007201	LOC3-007-4-D-B-0-00-000-0-00-0	365	395	615	203	510	Ø9	G1	292	83	214	74	80	50	45	105
5849011001	LOC3-011-4-D-A-0-00-000-0-00-0	440	470	626	203	510	Ø9	G1	366	83	252	62	175	50	41	103
5849011201	LOC3-011-4-D-B-0-00-000-0-00-0	440	470	639	203	510	Ø9	G1	366	83	252	74	175	50	41	103
5849016001	LOC3-016-4-D-A-0-00-000-0-00-0	496	526	687	203	510	Ø9	G1	427	83	280	87	300	50	46	107
5849016201	LOC3-016-4-D-B-0-00-000-0-00-0	496	526	699	203	510	Ø9	G1	427	83	280	87	300	50	46	107
5849016401	LOC3-016-4-D-C-0-00-000-0-00-0	496	526	712	203	510	Ø9	G1	427	83	280	87	300	50	46	107
5849016601	LOC3-016-4-D-D-0-00-000-0-00-0	496	526	725	203	510	Ø9	G1	427	83	280	100	300	50	46	107
5849023001	LOC3-023-4-D-B-0-00-000-0-00-0	580	610	729	356	610	Ø14	G1	509	98	322	74	385	65	44	104
5849023201	LOC3-023-4-D-C-0-00-000-0-00-0	580	610	770	356	610	Ø14	G1	509	98	322	87	385	65	44	104
5849023401	LOC3-023-4-D-D-0-00-000-0-00-0	580	610	783	356	610	Ø14	G1	509	98	322	100	385	65	44	104
5849033006	LOC3-033-4-A-B-0-00-000-0-00-0	692	722	785	356	610	Ø14	G1 1/4	619	103	378	74	326	70	38	99
5849033001	LOC3-033-4-A-C-0-00-000-0-00-0	692	722	798	356	610	Ø14	G1 1/4	619	103	378	87	326	70	38	99
5849033201	LOC3-033-4-A-D-0-00-000-0-00-0	692	722	810	356	610	Ø14	G1 1/4	619	103	378	100	326	70	38	99

TYPE	Nom. oil flow l/min	Cooling capacity in kW at EDT 40 °C	Cooling capacity kW/°C	Acoustic pressure level LpA dB(A) 1m*	No. of poles/ Capacity kW	Weight kg (approx)
LOC3 007 - 4 - D - A	20	5.6	0.14	64	4-0.75	30
LOC3 007 - 4 - D - B	40	7.2	0.18	64	4-.075	30
LOC3 011 - 4 - D - A	20	9.2	0.23	70	4-0.75	34
LOC3 011 - 4 - D - B	40	10.4	0.26	70	4-0.75	34
LOC3 016 - 4 - D - A	20	11.2	0.28	74	4-1.50	45
LOC3 016 - 4 - D - B	40	15.6	0.39	74	4-1.50	45
LOC3 016 - 4 - D - C	60	18.0	0.45	74	4-1.50	45
LOC3 016 - 4 - D - D	80	19.6	0.49	74	4-1.50	45
LOC3 023 - 4 - D - B	40	21.2	0.53	77	4-1.50	53
LOC3 023 - 4 - D - C	60	24.4	0.61	77	4-2.20	62
LOC3 023 - 4 - D - D	80	26.8	0.67	77	4-2.20	62
LOC3 033 - 4 - A - B	40	28.8	0.72	85	4-3.00	76
LOC3 033 - 4 - A - C	60	32.0	0.80	85	4-3.00	76
LOC3 033 - 4 - A - D	80	34.8	0.87	85	4-3.00	76

*Electric motors specified are calculated for max. working pressure 6 bar at 125 cSt and 50 Hz, 4 bar at 125 cSt and 60 Hz.
If you require higher pressure, please contact us for a choice of motors with a higher output.
**Noise level tolerance ± 3 dB(A).

Tel: +45 63 12 83 00 | Email: ps@hymatik.com | www.hymatik.com | Hvidkaervej 27a, DK-5250 Odense SV, Denmark

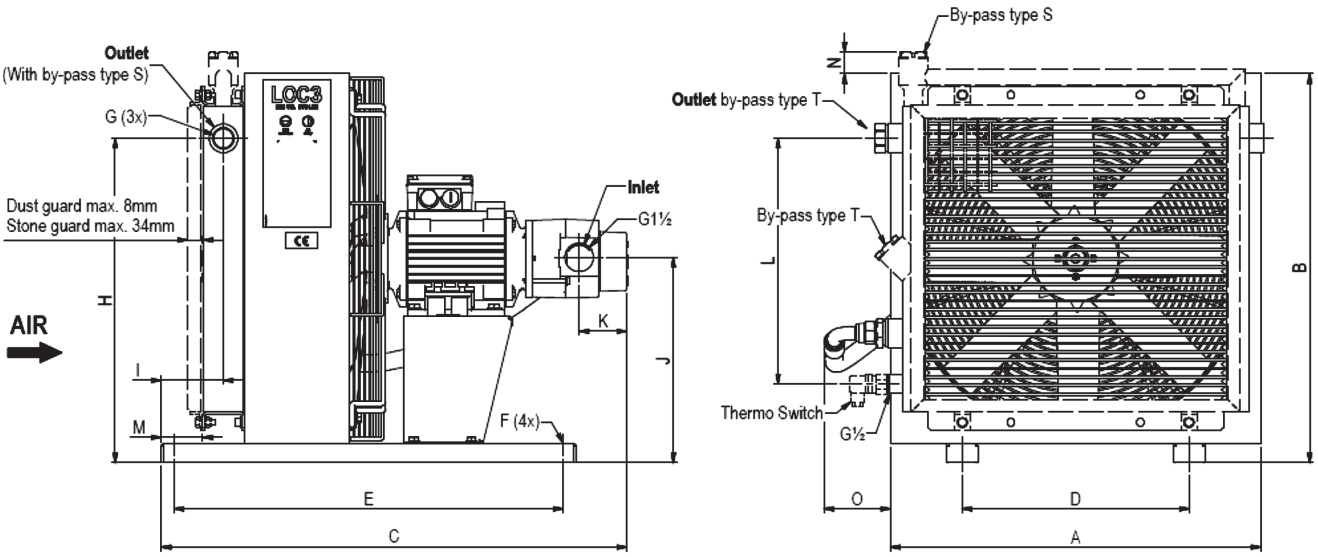

All dimensions are reference.
The design specification take presence at all time.



PRODUCT BENEFITS

- ⇨ Cooling capacity up to 45 kW
- ⇨ Suitable for most applications
- ⇨ Robust construction
- ⇨ Low maintenance
- ⇨ Wide variety of specifications

For the complete product range see:
www.parker.com

2 day despatch
Max qty- 3 units

Brazed Plate Water Oil Cooler - PWO Series

The Parker PWO is a compact and lightweight brazed plate heat exchanger with a high cooling capacity for its size.
- Maximum pressure: 31 Bar
- Temperature range: -196°C up to +225°C

Part Number	description	size	Nb plate	Height A (mm)	Width B (mm)	Depth E + F + G (mm)	Empty Weight (kg)	connection	Maximum Cooling Capacity (kW) ΔT 40°	Clamp	Vibration Damper
508454	PWO B5THx10/1P-SC-M 2x3/4" INT HEX + 2x1/2" INT HEX	5	10	193	76	53.5	1	2x3/4" INT HEX + 2x1/2" INT HEX	8 (at oil flow 67 l/min)	PWOCLAMP B5	214025
508460	PWO B8TH*30/1P-SC-M 2*3/4" INT HEX + 2x1/2" INT HEX	8	30	317	76	98.3	3.21	2x3/4" INT HEX 2x1/2" INT HEX	27(at oil flow 80 l/min)	PWOCLAMP B8	214025
50831006	PWO B10TH*40/1P-SC-S 2*1" INT HEX + 2x3/4" INT HEX	10	40	289	119	119.7	5.39	2x1" INT HEX + 2x3/4" INT HEX	53 (at oil flow 150 l/min)	PWOCLAMP B10B12	214025
50832505	PWO B25TH*50/1P-SC-S 2*1" 1/4 INT HEX + 2x1" INT HEX	25	50	526	119	142.1	11.15	'2x1 1/4" INT HEX 2x1" INT HEX	79 (at oil flow 150 liter/min)	PWOCLAMP B25B28	214025

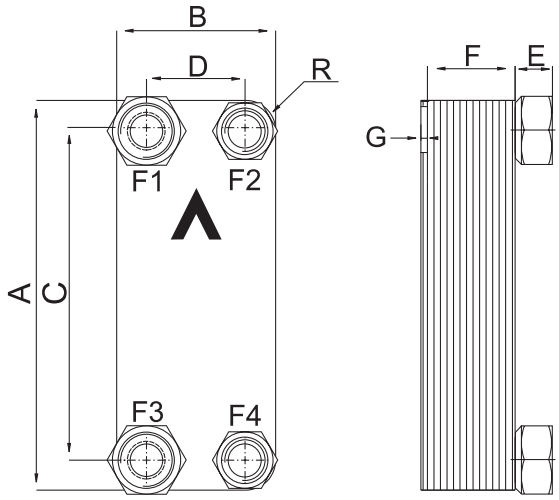

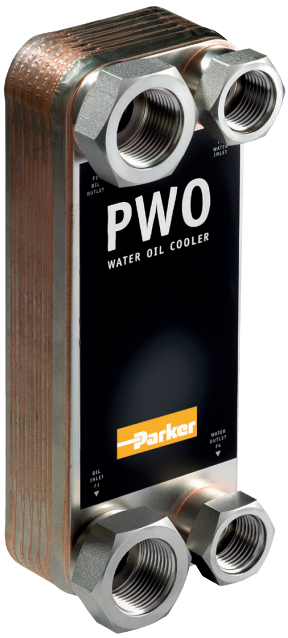

Tel: +45 63 12 83 00 | Email: ps@hymatik.com | www.hymatik.com | Hvidkaervej 27a, DK-5250 Odense SV, Denmark

2 day despatch
Max qty- 3 units

Gerotor Pump - QPM3 Series

The Parker QPM3 Gerotor Pump is a low pressure pump for high efficiency.
- Maximum pressure: 10 bar
- Flow rate: from 10 l/min to 80l/min

Part Number	Description	Motor Power (kW)	Flow Rate (lpm)	Weight (kg)	Noise LpA dB(A) at 1m	Approx length C (mm) - *may vary with motor supplier*	Height K (mm)	Width H (mm)	Fixing point for feet F (mm)
58632001	QPM3 20-4-0,75 230/400-50	0,75	20	13	65	368	195	157	125
58632050	QPM3 20-4-1,5 230/400-50	1,5	20	21	66	443	220	185	140
58634001	QPM3 40-4-0,75 230/400-50	0,75	40	13	65	381	195	157	125
58634050	QPM3 40-4-1,5 230/400-50	1,5	40	21	66	456	220	185	140
58636001	QPM3 60-4-0,75 230/400-50	0,75	60	14	65	393	195	157	125
58636020	QPM3 60-4-1,5 230/400-50	1,5	60	22	66	468	220	185	140
58638001	QPM3 80-4-1,5 230/400-50	1,5	80	22	67	481	220	185	140
58638030	QPM3 80-4-2,2 230/400-50	2,2	80	28	67	527	240	206	160



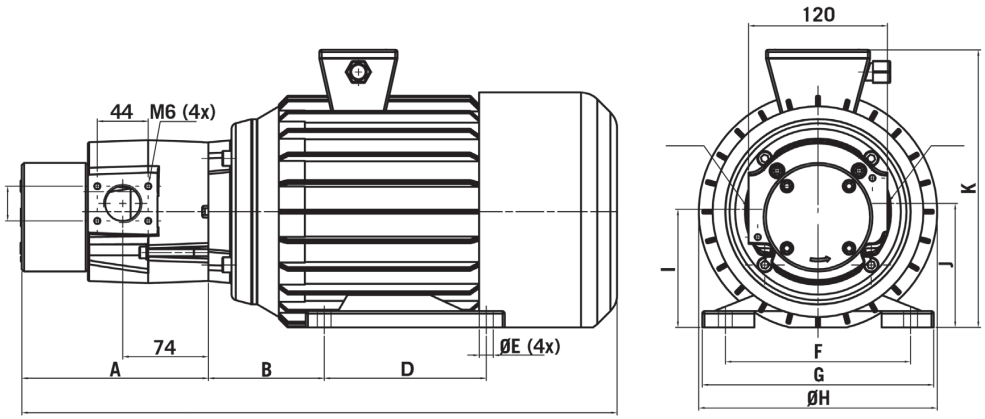

Tel: +45 63 12 83 00 | Email: ps@hymatik.com | www.hymatik.com | Hvidkaervej 27a, DK-5250 Odense SV, Denmark

NEW

Quiet Air Oil Cooler with AC motor - QAC Series

Offering the lowest noise levels compared to any other air oil cooler available on the European market.

The Quiet Air Oil Cooler (QAC) series is engineered for industrial applications, providing cooling capacity up to 160 kW and offers the lowest noise levels available on the market. This new air cooler range has an improved design which is optimized to significantly reduce noise levels making it more suitable for installation close to operatives and could help noise level regulations be met.

YOUR EXPECTATIONS

- Temperature regulation for hydraulic systems
- Conforming to legal requirements for noise
- Energy efficient motors
- Effective cooling capacity
- Low maintenance
- Reliability

OUR OFFER

- An efficient, quiet and cost saving cooling solution
- Low noise (65 to 82 dB(A)) depending on size
- Cooling capacity up to 4.25 kW/C°
- High efficiency IE3 AC motors
- Advancement of existing LAC cooler series and thus interchangeable



YOUR VALUE

- The hydraulic system's useful life is extended
- The oil's useful life is extended
- The hydraulic system's availability increases – more operating time and fewer shutdowns
- Service and repair costs are reduced
- High efficiency level maintained in continuous operation

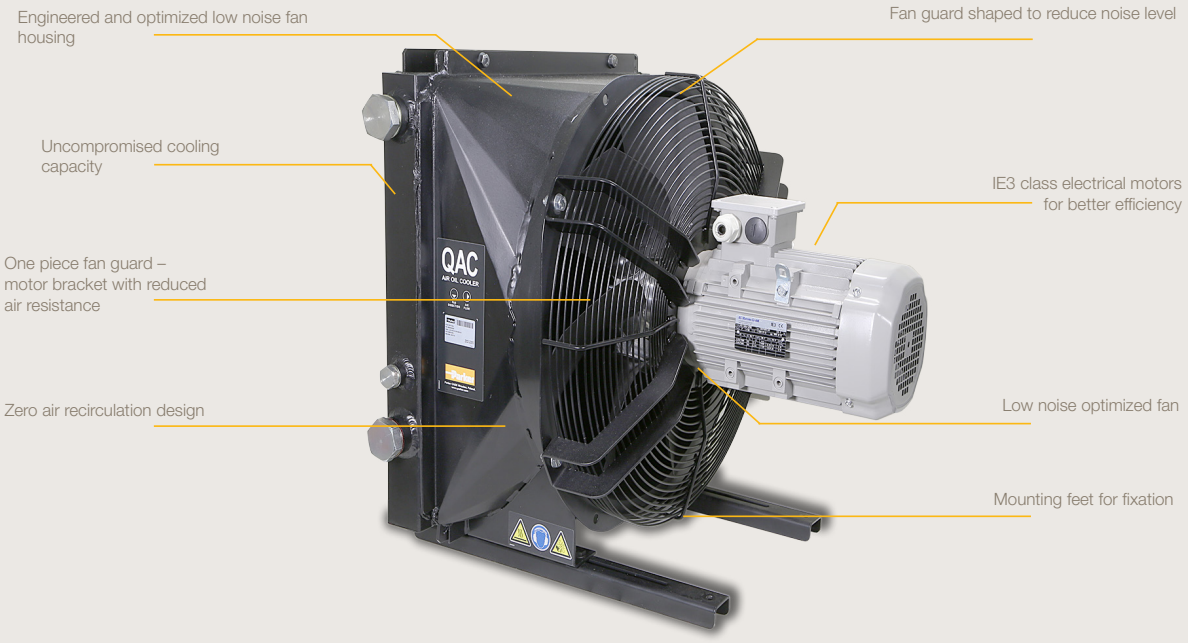

Tel: +45 63 12 83 00 | Email: ps@hymatik.com | www.hymatik.com | Hvidkaervej 27a, DK-5250 Odense SV, Denmark

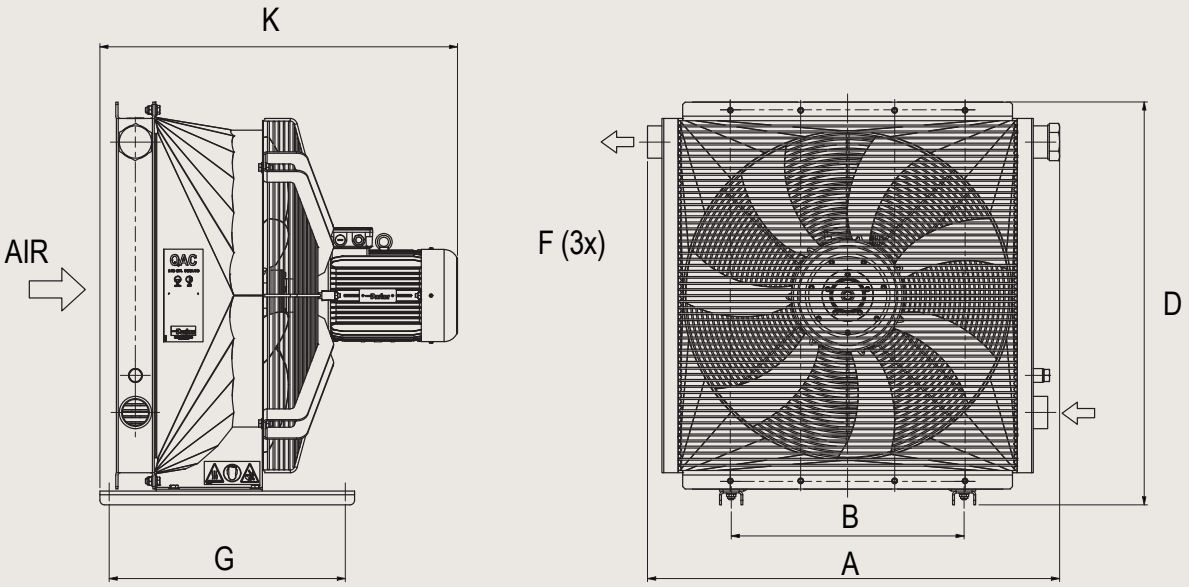

Part Number	Type	Size	Motor Type Asynchronous Motor	Motor Output (kW)	Maximum Cooling Capacity (kW/°C)	*Noise Level (dB(A))	A (mm)	B (mm)	D (mm)	F Port Size (inch)	G (mm)	K (mm)	Weight (kg)
5846033001	QAC0334AC00000000S0JB0	33	4-Pole / 50-60 Hz	0,75	1.2	77	709	356	688	G1 ¼	510	665	57
5846044001	QAC0444AC00000000S0JB0	44	4-Pole / 50-60 Hz	0,75	1.3	77	709	356	868	G1 ¼	510	665	63
5846056001	QAC0568AC00000000S0JB0	56	8-Pole / 50-60 Hz	0,75	1.6	65	876	508	870	G1 ¼	510	758	83
5846058001	QAC0588AC00000000S0JB0	58	8-Pole / 50-60 Hz	0,75	1.8	68	884	508	870	G2	510	770	95

Sound Pressure Level dB(A) measured according to ISO 3743-1.
Noise levels should be used as reference only. Noise values are affected by room properties like size, walls and surrounding equipment.

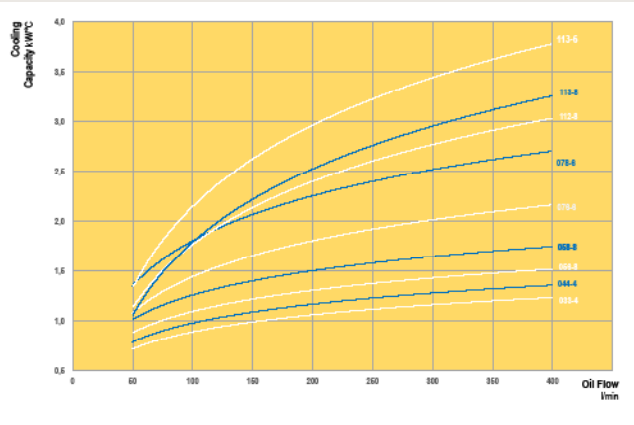

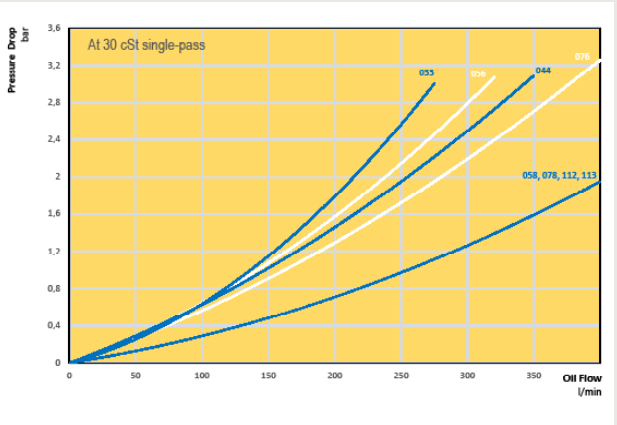

Max static pressure: 21 bar
Max Dynamic pressure: 14 bar**
Standard Voltage: 230/400V (±5 %), 50 Hz | 265/460V (±5 %), 60 Hz
Fluid Type: Mineral Oil (HL/HLP) or Water Glycol (HFC)
Standard Colour: Jet Black (RAL 9005)
** Tested in accordance with ISO/DIS 10771-1



For more information about the QAC series please visit our website or download the QAC Series Brochure → here

Online Support

You can find the latest product information on the Parker website, parker.com/acde.

Designed to be accessible via desktops, tablets and smart phones you can download sizing software, e-configurators, manuals and 3D models.

Also our latest brochures and catalogues are available for viewing or downloading on our website.



Part numbers

Global sales network

3D Models

Sizing software
- Accumulator
- Cooler

Econfigurators

Technical specification

Training videos

Market sector animations

Brochures

Manuals

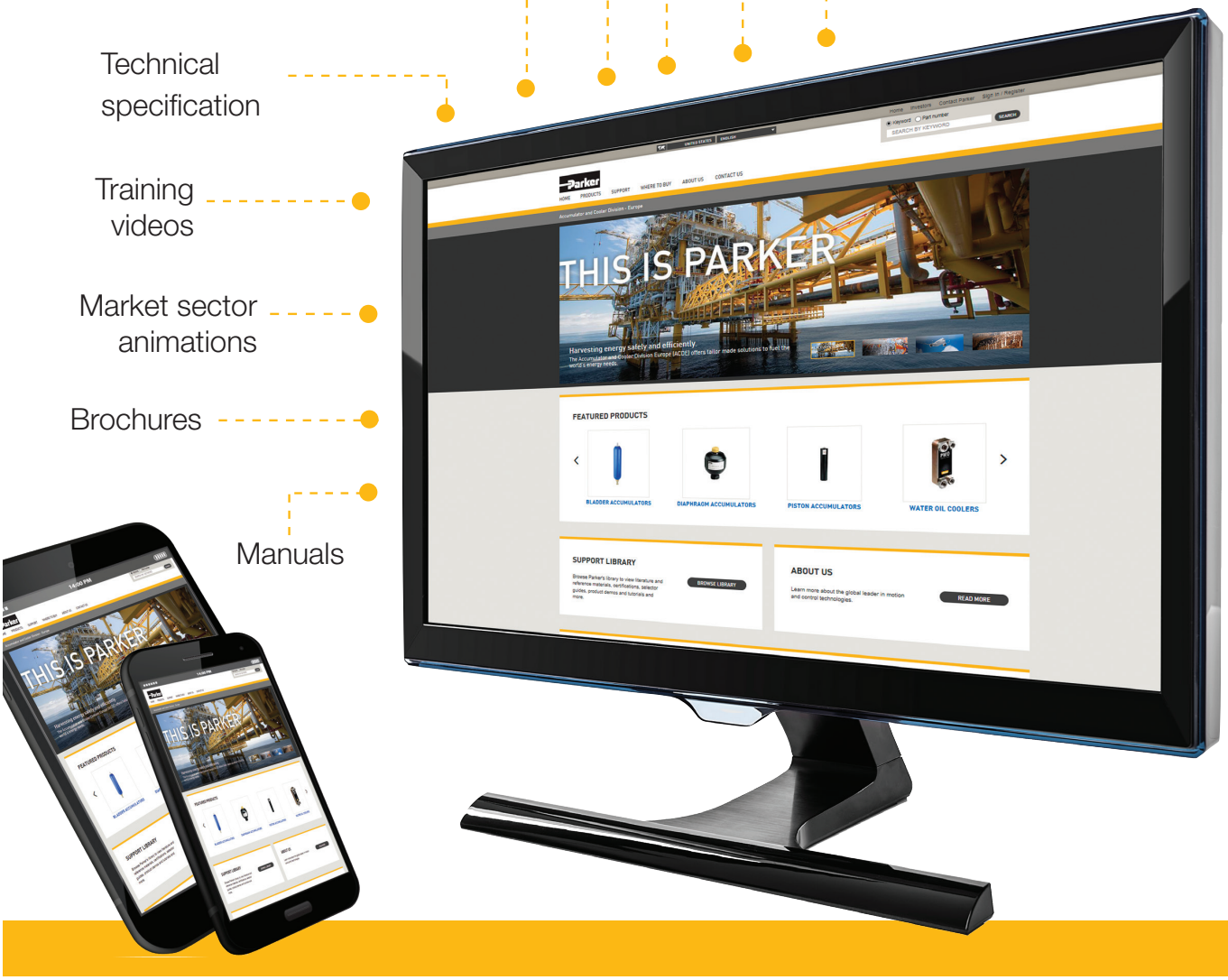

NEW

How to size a cooler

More Cooling per €
with precise calculations and our engineers' support

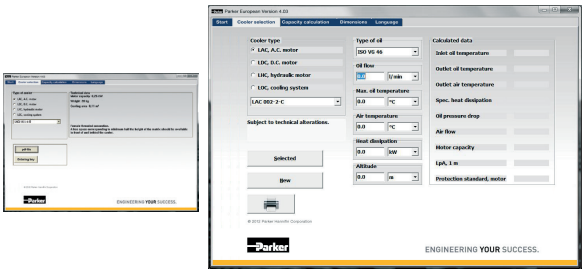

Optimal sizing produces efficient cooling. Correct sizing requires knowledge and experience. Our calculation program, combined with our engineers' support, gives you access to this very knowledge and experience. The result is more cooling per € invested. The user-friendly calculation program can be accessed on: https://divapps.parker.com/divapps/CADE/SSW/.

Valuable system review into the bargain
A more wide-ranging review of the hydraulic system is often a natural element of cooling calculations. Other potential system improvements can then be discussed – e.g. filtering, offline or online cooling, etc. Contact us for further guidance and information.

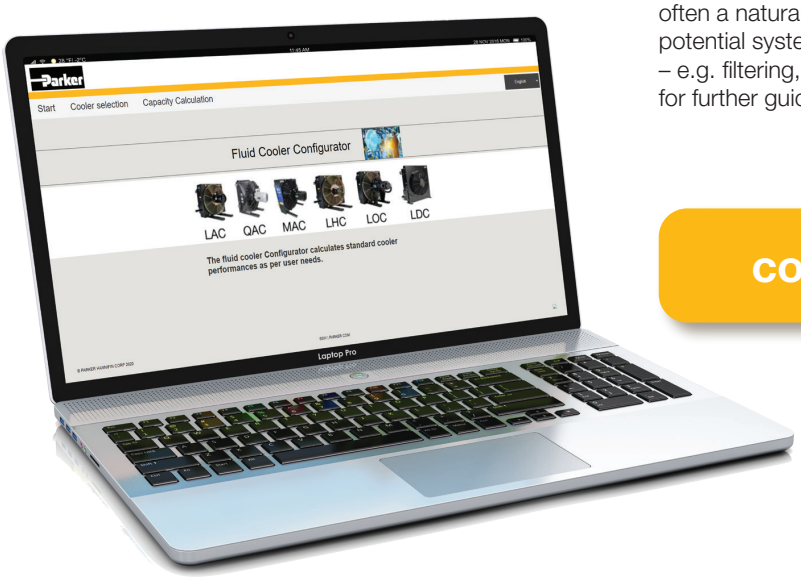

cooler sizing app

Sizing Questionnaires

Customers can complete a sizing questionnaire and send this to the local Parker Sales Office so that the most efficient cooler can be sized for your application.

You can download the sizing questionnaires from our website or click on the links below if you are viewing a digital version of this document.

There are 2 questionnaires to select from:-

1. Air Oil Cooler Sizing

2. Water Oil Cooler Sizing

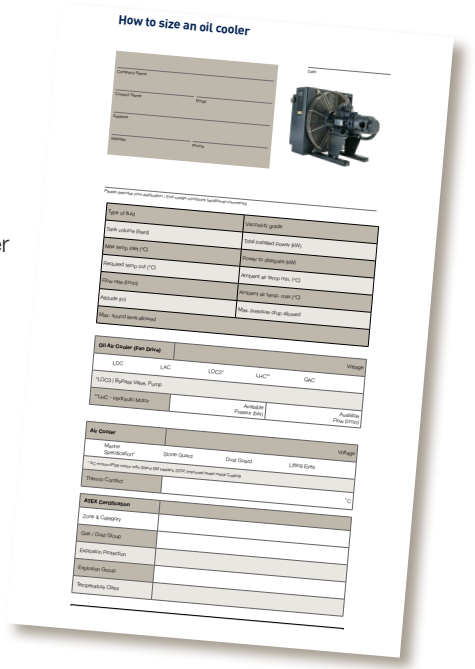

Tel: +45 63 12 83 00 | Email: ps@hymatik.com | www.hymatik.com | Hvidkaervej 27a, DK-5250 Odense SV, Denmark

Cylinders

Industrial Hydraulic Cylinders



INDUSTRIAL HYDRAULIC CYLINDER SERIES - HMI

Parker Series HMI Metric Hydraulic Cylinders, tie rod construction, are designed to meet the requirements of ISO 6020/2 (2006), 160 Bar Compact Series. HMI Series cylinders may be used for working pressures up to 210 Bar.

In addition to worldwide support, Series HMI incorporates a multitude of innovative design features that increase machine productivity through reduced downtime and provide improved system efficiency as a result of faster cycle times. Design features such as the "Jewel" rod gland assembly, hard chrome plated piston rods, and stepped cushions provide increased machine productivity. Lipseal™ piston is standard on 25mm, 32mm and 40mm bore sizes, and provides zero leakage under static conditions for hydraulic pressures up to 210 Bar. Parker's B style piston, standard on 50mm and larger bore sizes, is a single seal design which incorporates two wear strips. This design provides smooth operation, long bearing life, and high load carrying capacity. The TS2000 Rod Seal in combination with the standard polyurethane Double-Service Wiperseal™ comprises a sealing system that delivers dry rod performance. Pressure actuated o-ring Body End Seals provide leak free service.

Every Series HMI cylinder is individually tested before leaving our plant to assure proper performance and leak free operation and comes with an 18 month warranty.

Please use the e-configurator on parker.com to customise your HMIF cylinder.



Tel: +45 63 12 83 00 | Email: ps@hymatik.com | www.hymatik.com | Hvidkaervej 27a, DK-5250 Odense SV, Denmark

NEW

3 day despatch
Max qty- 3 units

Metric Hydraulic Cylinder - HMIF



Bore Ø	Rod Ø
25	12
	18
32	14
	22
40	18
	28
50	22
	36
	28
63	28
	45
	36
80	36
	56
	45
100	45
	70
	56

Attributes

- 8 mounting styles

ISO	ME5	ME6	MS2	MP5	MT4	MX3	MX2	MX1
Paker	JJ	HH	C	SBd	DD	TB	TC	TD

- Bore sizes 25 - 100 mm
- Standard rod configurations
- Maximum stroke up to 2000 mm
- Standard ports
- Seal groups 1 and 5
- Standard primer paint, RAL 9005
- Standard accessories to suit
- Temperature ranges -20°C to +150°C depending on fluid and seal types
- Working pressure up to 210 bar
- Conforms to ISO 6020/2

Parker Worldwide

Europe, Middle East, Africa

AE – United Arab Emirates, Dubai
Tel: +971 4 8127100
parker.me@parker.com

AT – Austria, Wiener Neustadt
Tel: +43 (0)2622 23501-0
parker.austria@parker.com

AT – Eastern Europe, Wiener Neustadt
Tel: +43 (0)2622 23501 900
parker.easteurope@parker.com

AZ – Azerbaijan, Baku
Tel: +994 50 2233 458
parker.azerbaijan@parker.com

BE/LU – Belgium, Nivelles
Tel: +32 (0)67 280 900
parker.belgium@parker.com

BG – Bulgaria, Sofia
Tel: +359 2 980 1344
parker.bulgaria@parker.com

BY – Belarus, Minsk
Tel: +48 (0)22 573 24 00
parker.poland@parker.com

CH – Switzerland, Etoy
Tel: +41 (0)21 821 87 00
parker.switzerland@parker.com

CZ – Czech Republic, Klecany
Tel: +420 284 083 111
parker.czechrepublic@parker.com

DE – Germany, Kaarst
Tel: +49 (0)2131 4016 0
parker.germany@parker.com

DK – Denmark, Ballerup
Tel: +45 43 56 04 00
parker.denmark@parker.com

ES – Spain, Madrid
Tel: +34 902 330 001
parker.spain@parker.com

FI – Finland, Vantaa
Tel: +358 (0)20 753 2500
parker.finland@parker.com

FR – France, Contamine s/Arve
Tel: +33 (0)4 50 25 80 25
parker.france@parker.com

GR – Greece, Athens
Tel: +30 210 933 6450
parker.greece@parker.com

HU – Hungary, Budaörs
Tel: +36 23 885 470
parker.hungary@parker.com

IE – Ireland, Dublin
Tel: +353 (0)1 466 6370
parker.ireland@parker.com

IL – Israel
Tel: +39 02 45 19 21
parker.israel@parker.com

IT – Italy, Corsico (MI)
Tel: +39 02 45 19 21
parker.italy@parker.com

KZ – Kazakhstan, Almaty
Tel: +7 7273 561 000
parker.easteurope@parker.com

NL – The Netherlands, Oldenzaal
Tel: +31 (0)541 585 000
parker.nl@parker.com

NO – Norway, Asker
Tel: +47 66 75 34 00
parker.norway@parker.com

PL – Poland, Warsaw
Tel: +48 (0)22 573 24 00
parker.poland@parker.com

PT – Portugal
Tel: +351 22 999 7360
parker.portugal@parker.com

RO – Romania, Bucharest
Tel: +40 21 252 1382
parker.romania@parker.com

RU – Russia, Moscow
Tel: +7 495 645-2156
parker.russia@parker.com

SE – Sweden, Spånga
Tel: +46 (0)8 59 79 50 00
parker.sweden@parker.com

SK – Slovakia, Banská Bystrica
Tel: +421 484 162 252
parker.slovakia@parker.com

SL – Slovenia, Novo Mesto
Tel: +386 7 337 6650
parker.slovenia@parker.com

TR – Turkey, Istanbul
Tel: +90 216 4997081
parker.turkey@parker.com

UA – Ukraine, Kiev
Tel: +48 (0)22 573 24 00
parker.poland@parker.com

UK – United Kingdom, Warwick
Tel: +44 (0)1926 317 878
parker.uk@parker.com

ZA – South Africa, Kempton Park
Tel: +27 (0)11 961 0700
parker.southafrica@parker.com

North America

CA – Canada, Milton, Ontario
Tel: +1 905 693 3000

US – USA, Cleveland
Tel: +1 216 896 3000

Asia Pacific

AU – Australia, Castle Hill
Tel: +61 (0)2-9634 7777

CN – China, Shanghai
Tel: +86 21 2899 5000

HK – Hong Kong
Tel: +852 2428 8008

IN – India, Mumbai
Tel: +91 22 6513 7081-85

JP – Japan, Tokyo
Tel: +81 (0)3 6408 3901

KR – South Korea, Seoul
Tel: +82 2 559 0400

MY – Malaysia, Shah Alam
Tel: +60 3 7849 0800

NZ – New Zealand, Mt Wellington
Tel: +64 9 574 1744

SG – Singapore
Tel: +65 6887 6300

TH – Thailand, Bangkok
Tel: +662 186 7000

TW – Taiwan, Taipei
Tel: +886 2 2298 8987

South America

AR – Argentina, Buenos Aires
Tel: +54 3327 44 4129

BR – Brazil, Sao Jose dos Campos
Tel: +55 800 727 5374

CL – Chile, Santiago
Tel: +56 2 623 1216

MX – Mexico, Toluca
Tel: +52 72 2275 4200

The products described herein, including without limitation, product features, specifications, designs, availability and pricing, are subject to change by Parker Hannifin Corporation and its related companies at any time without notice.

© 2021 Parker Hannifin Corporation. All rights reserved.

Catalogue MSG10-4082/UK Rev2 03/2021-ZZ

EMEA Product Information Centre
Free phone: 00 800 27 27 5374
(from AT, BE, CH, CZ, DE, DK, EE, ES, FI, FR, IE, IL, IS, IT, LU, MT, NL, NO, PL, PT, RU, SE, SK, UK, ZA)

US Product Information Centre
Toll-free number: 1-800-27 27 537

www.parker.com

Your local authorized Parker distributor