



aerospace
climate control
electromechanical
filtration
fluid & gas handling
hydraulics
pneumatics
process control
sealing & shielding





QAC Series

Quiet Air Oil Cooler with AC motor for Industrial Applications



Parker

PTS
Parker Tracking System

ENGINEERING YOUR SUCCESS.

Air Oil Cooler Range

As a global player specializing in innovative, efficient system solutions for temperature optimization and energy storage, Parker's products are used for the most diverse environments and applications all over the world.

In hydraulic systems energy is transformed and transmitted. During this process, efficiency losses occur, i.e. mechanical and hydraulic energy is converted into heat. It is the purpose of the cooler to dissipate this heat and to maintain the thermal balance of the hydraulic fluid.

Parker's high performance coolers are equipped with axial fans and IE3 class motors, ensuring your hydraulic system's peak performance.

See Parker's extensive series of air oil coolers for all requirements on our website.

Why Cooling

Choosing the right cooler requires precise system sizing. The most reliable way to size a cooler is with the aid of our calculation program. This program, together with precise evaluations from our experienced, skilled engineers, gives you the opportunity for more cooling per $ invested.

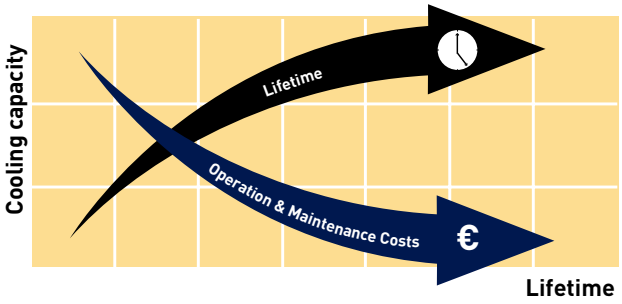

Overheating - an expensive problem

An underestimated cooling capacity produces a temperature that is too high. The consequences are poor lubricating properties, higher internal leakage, a higher risk of cavitation, damaged components, etc.
Overheating leads to a significant drop in efficiency which can be detrimental to our environment.

Temperature optimization - a basic prerequisite for cost-efficient operation

Temperature balance in a hydraulic system occurs when the cooler can cool down the energy input that the system does not consume - the system's lost energy.
Temperature optimization occurs at the temperature at which the oil viscosity is maintained at recommended values.

Tel: +45 63 12 83 00 | Email: ps@hymatik.com | www.hymatik.com | Hvidkaervej 27a, DK-5250 Odense SV, Denmark

New QAC Series for better Performance

The new QAC series sets new standards - but not only in terms of performance. The sound pressure level of the cooler series also sets new standards in noise emission. This means that the coolers can be used in sensitive areas and meet the requirements of noise regulations without the need for additional measures.

The series comes in a wide range of sizes (33 to 113), contact the Parker support team for further assistance.

The QAC series is suitable for Industrial applications in the following sectors:

- Power Units
- Lubrication Systems
- Cranes – Lift Equipment
- Presses
- Wind Power
- General Machinery

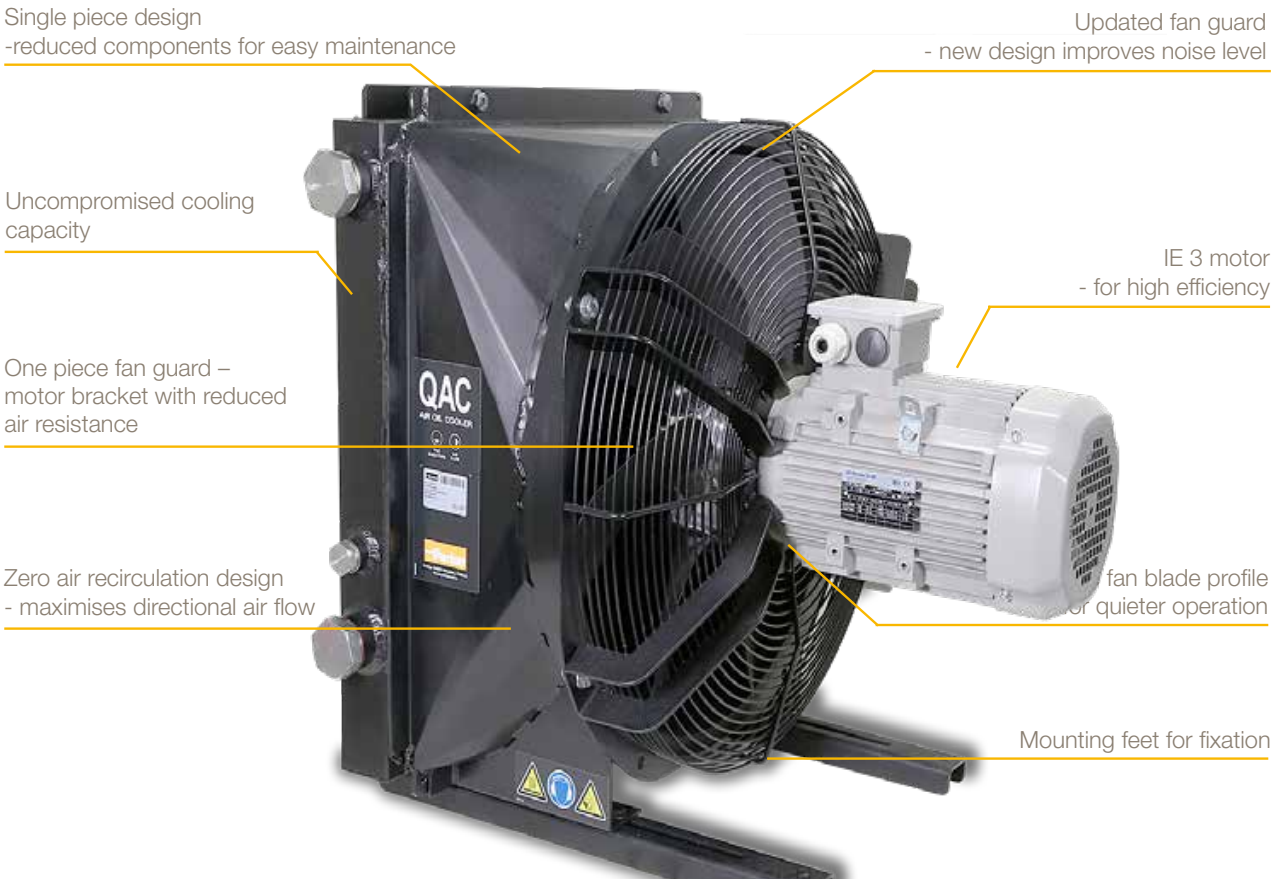







QAC Series
Quiet Air Oil Cooler with AC Motor

The Quiet Air Oil Cooler (QAC) series is engineered for industrial applications, providing cooling capacity up to 160 kW and offers the lowest noise levels available on the market.
This new air cooler range has an improved design which is optimized to significantly reduce noise levels making it more suitable for installation close to operatives and could help noise level regulations be met.

YOUR EXPECTATIONS

- Temperature regulation for hydraulic systems
- Conforming to legal requirements for noise
- Energy efficient motors
- Effective cooling capacity
- Low maintenance
- Reliability

OUR TECHNOLOGY

- An efficient, quiet and cost saving cooling solution
- Low noise (65 to 82 dB(A)) depending on size
- Cooling capacity up to 4.25 kW/C°
- High efficiency IE3 AC motors
- Advancement of existing LAC cooler series
- Interchangeability with existing system

Tel: +45 63 12 83 00 | Email: ps@hymatik.com | www.hymatik.com | Hvidkaervej 27a, DK-5250 Odense SV, Denmark



The new **QAC Series** combines high-performance, efficient fluid cooling with the lowest noise level on the European Market.









YOUR VALUE

- Cooling capacity up to 160 kW
- The hydraulic system's useful life is extended
- The oil's useful life is extended
- The hydraulic system's availability increases – more operating time and fewer shutdowns
- Service and repair costs are reduced
- High efficiency level preserved in continuous operation
- Maximum static operating pressure 21 bar
- Conforms to ISO 12100, ISO 4413, ISO 13857
- Compliant to directive 2006/42/EC Safety Machinery
- REACH & RoHS compliant





The new cooler range has an improved design, which is optimised to significantly reduce noise levels. This makes the units suitable for installation close to operators and can help noise level regulations be met.

All cooler sizes are available with high efficiency IE3 AC motors making them a cost-effective cooling solution for industrial hydraulic systems.

The QAC Cooler is the optimization of the LAC Series - combining its proven performance and reliability with a series of improvements. Service and repair costs are reduced.

Parker offers a complete cooler and accessories range with a wide selection of cooling capacities and sizes to suit every hydraulic system.

Technical Data and Dimensions

Part Number	Type	Size	Motor Type Asynchronous Motor	Motor Output (kW)	Maximum Cooling Capacity (kW/°C)	*Noise Level (dB(A))	A (mm)	B (mm)	D (mm)	F Port Size (inch)	G (mm)	K (mm)	Weight (kg)
5846033001	QAC0334AC00000000S0JB0	033	4-Pole / 50-60 Hz	0,75	1.2	77	709	356	688	G1 ¼	510	665	57
5846044001	QAC0444AC00000000S0JB0	044	4-Pole / 50-60 Hz	0,75	1.3	77	709	356	868	G1 ¼	510	665	63
5846056001	QAC0568AC00000000S0JB0	056	8-Pole / 50-60 Hz	0,75	1.6	65	876	508	870	G1 ¼	510	758	83
5846058001	QAC0588AC00000000S0JB0	058	8-Pole / 50-60 Hz	0,75	1.8	68	884	508	870	G2	510	770	95
5846076001	QAC0766AC00000000S0JB0	076	6-Pole / 50 Hz	2,2	2.2	74	1028	518	1052	G1 ½	800	824	116
5846078001	QAC0786AC00000000S0JB0	078	6-Pole / 50 Hz	2,2	2.7	74	1028	518	1052	G2	800	824	144
5846112001	QAC1128AC00000000S0JB0	112	8-Pole / 50 Hz	2,2	3.5	73	1218	600	1215	G2	800	928	184
5846113003	QAC1136AC00000000S0JB0	113	6-Pole / 50 Hz	5,5	4.20	79	1218	600	1215	G2	860	977	259
5846113001	QAC1138AC00000000S0JB0	113	8-Pole / 50 Hz	2,2	3.7	73	1218	600	1215	G2	860	928	236
5846076002	QAC0766BC00000000S0JB0	076	6-Pole / 60 Hz	2,6	2.2	77	1028	518	1052	G1 ½	800	824	112
5846078002	QAC0786BC00000000S0JB0	078	6-Pole / 60 Hz	2,6	2.7	77	1028	518	1052	G2	800	824	140
5846112002	QAC1128BC00000000S0JB0	112	8-Pole / 60 Hz	2,6	3.2	76	1218	600	1215	G2	800	928	184
5846113004	QAC1136BC00000000S0JB0	113	6-Pole / 60 Hz	6,6	4.25	82	1218	600	1215	G2	860	977	259
5846113002	QAC1138BC00000000S0JB0	113	8-Pole / 60 Hz	2,6	4	76	1218	600	1215	G2	860	928	236

* Sound Pressure Level dB(A) measured according to ISO 3743-1.

Noise levels should be used as reference only. Noise values are affected by room properties like size, walls and surrounding equipment.

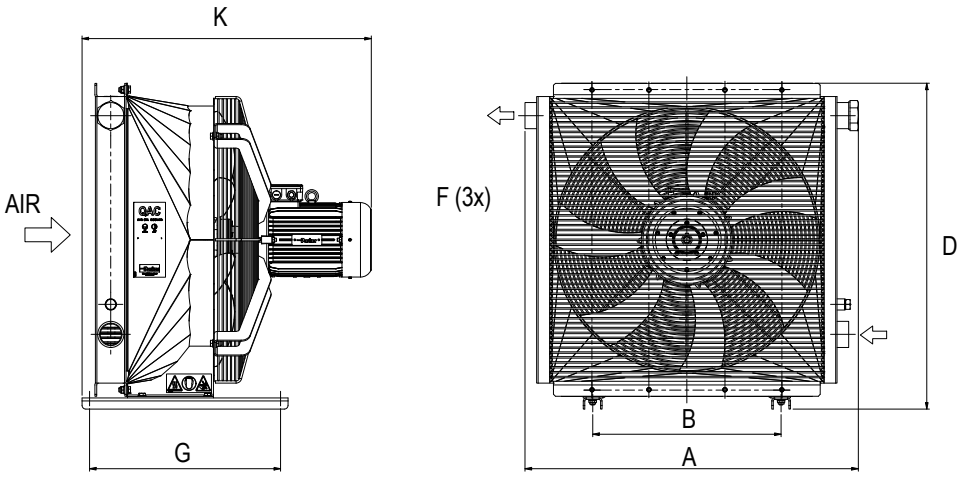

Max static pressure:	21 bar
Max Dynamic pressure:	14 bar**
Standard Voltage:	230/400V (±5 %), 50 Hz 265/460V (±5 %), 60 Hz
Fluid Type:	Mineral Oil (HL/HLP) or Water Glycol (HFC)
Standard Colour:	Jet Black (RAL 9005)

Parker offer an extensive range of options therefore please contact your local Parker sales company for any other requirements.

** Tested in accordance with ISO/DIS 10771-1

Cooling Capacity

The cooling capacity curves are based on the inlet oil temperature and the ambient air temperature. An oil temperature of 60°C and an air temperature of 20°C produce a temperature difference of 40°C. Multiply by kW/°C for total cooling capacity according to the European Standard EN 1048:1998.

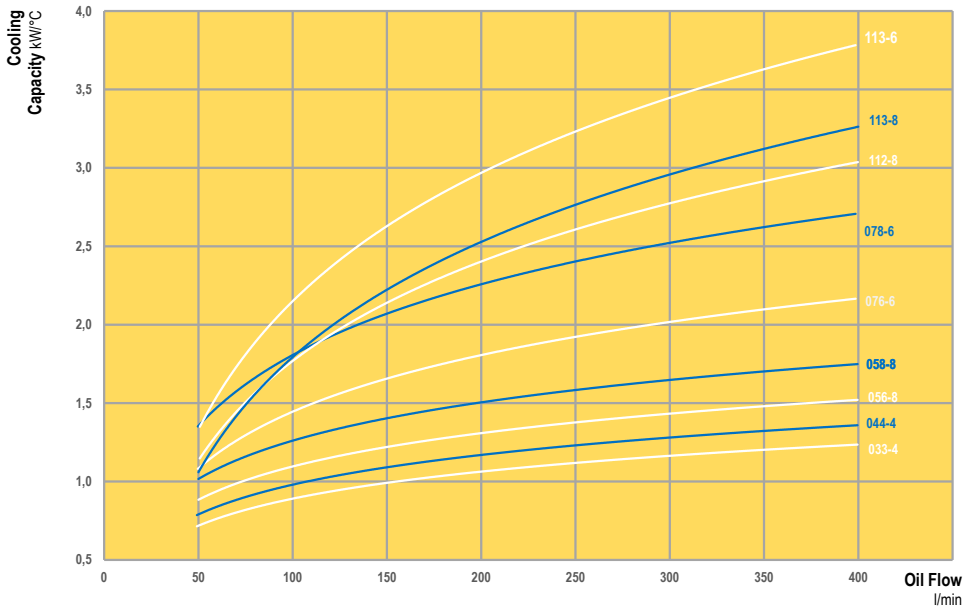

Pressure Drop

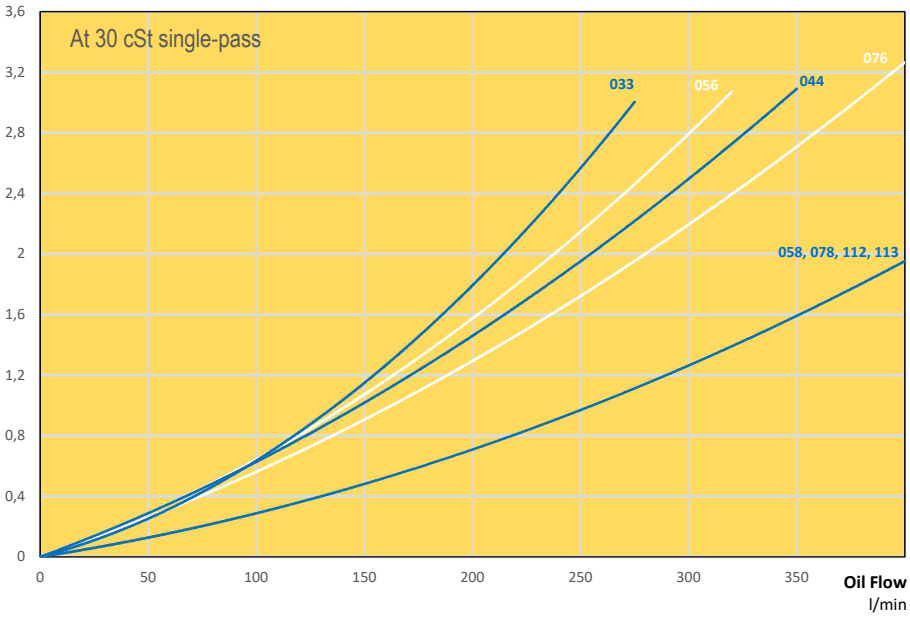

Tel: +45 63 12 83 00 | Email: ps@hymatik.com | www.hymatik.com | Hvidkaervej 27a, DK-5250 Odense SV, Denmark

QAC Code de commande

QAC 112 6 A C 00 000 0 0 0 S 0 JB 0

Series

Cooler Size
033, 044, 056, 058, 078, 112, 113

Number of Poles
4 (sizes 033, 044)
6 (sizes 056, 058, 078, 112)
8 (112, 113)

Voltage & Frequency
A – 230/400V - 50 Hz (50 Hz & 60 Hz up to size 058)
B – 265/460V - 60 Hz (from size 078 and above)

Protection Rating
C – IP 55

Thermo Contact
00- Without
40- 40°C
50- 50°C
60- 60°C

Cooler Matrix
000 – Standard
Built-in, pressure-controlled bypass, single pass (up to size 078)
S20 – 2bar S type by-pass
S50 – 5bar S type by-pass
S80 – 8bar S type by-pass
Built-in, pressure-controlled bypass, single pass, Hose type
(for sizes 112 and 113)
H20 – 2bar H type by-pass
H50 – 5bar H type by-pass
H80 – 8bar H type by-pass
Built-in, temperature and pressure-controlled bypass, single pass
S25 - 50°C thermo by-pass and 2,2 bar single-pass (up to size 078)
H25 - 50°C thermo by-pass and 2,2 bar single-pass (sizes 112 &113)

Certificate
No certificate - 0

Color
RAL9005, Jet Black - JB

Feet
Standard - 0

Fan
Suction Fan - S

Matrix Guard
No Guard - 0
Dust Guard - D
Stone Guard - S
Dust & Stone Guard- P

Matrix Mounting
Standard - 0

Connections
Standard - 0

How to size a Cooler

More Cooling per €
with precise calculations and our engineers' support

Optimal sizing produces efficient cooling. Correct sizing requires knowledge and experience. Our calculation program, combined with our engineers' support, gives you access to this very knowledge and experience. The result is more cooling per € invested. The user-friendly calculation program can be downloaded from www.parker.com/acde.

Valuable system review into the bargain
A more wide-ranging review of the hydraulic system is often a natural element of cooling calculations. Other potential system improvements can then be discussed – e.g. filtering, offline or online cooling, etc. Contact us for further guidance and information.

Parker Hannifin's quality and performance guarantee insurance for your operations and systems
A constant striving towards more cost-efficient and environment friendly hydraulic systems requires continuous development. Areas where we are continuously seeking to improve performance include cooling capacity, noise level, pressure drop and fatigue. Meticulous quality and performance tests are conducted in our laboratory. All tests and measurements take place in accordance with standardised methods - cooling capacity in accordance with EN1048, noise level ISO 3743, pressure drop EN 1048 and fatigue ISO 10771-1.



www.parker.com/acde

Sizing Questionnaires

Customers can complete a sizing questionnaire and send this to the local Parker Sales Office so that the most efficient cooler can be sized for your application.

You can download the sizing questionnaire for your air oil cooler from our website or click on the link below if you are viewing a digital version of this document.

Air Oil Cooler Sizing

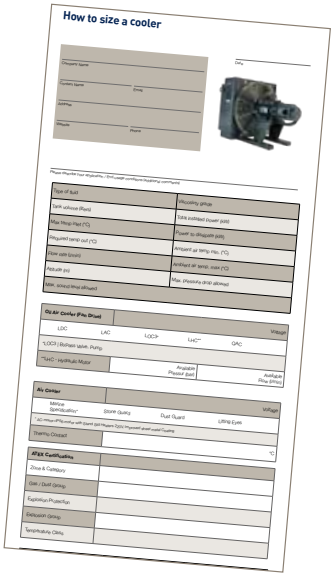

DOWNLOAD
sizing software

Take the Next Step

- choose the right accessories

Supplementing a hydraulic system with a cooler, cooler accessories and an accumulator gives you increased availability and a longer useful life, as well as lower service and repair costs.

All applications and operating environments are unique. A well-planned choice of the following accessories can thus further improve your hydraulic system.

Please contact Parker Hannifin for guidance and information.

With our specialist expertise, industry knowledge and advanced technology, we can offer a range of different solutions for coolers and accessories to meet your requirements.



Lifting eyes - included as standard
For safe and simple handling during installation and relocation - only used for installation and maintenance



Thermo contact
Sensor with fixed set point, for temperature warnings. Can be used for more cost-efficient operation and better environmental consideration through the automatic control of the fan motor, either on or off.





Stone guard/Dust guard
In dirty environments a dust guard prevents the matrix from getting clogged by medium and large size particles or chips and allows easier maintenance. The Stone guard protects the matrix from damage by projectiles. When shielded, the cooler is protected in the toughest conditions and the risk of unscheduled maintenance is reduced to a minimum.





Temperature-controlled bypass valve Integrated
Allows the oil to bypass the cooler matrix if the pressure drop is higher than 2,2 bar or less than the chosen temperature. The bypass closes when the oil temperature increases. Different closing temperatures available. Available for singlepass or two-pass matrix design

Online Support

www.parker.com/acde

You can find the latest product information on the Parker website, parker.com/acde. Designed to be accessible via desktops, tablets and smart phones you can download cooler sizing software, brochures, manuals and 3D models. All of the latest product news and contact information is also included on the website.



Parker Tracking System (PTS)

Asset Location
Establish detailed location data for fast and easy replacement.

Asset Inspection
Collecting and storing customizable asset inspection data for easy retrieval.

Scheduled Events
Easily schedule and manage future inspection and replacement dates.

Registration
Register PTS tagged products from our Mobile App.

Asset Geneology
Capture and analyze asset replacement and service history for continuous improvement.

Transfer Records
Seamlessly transfer record visibility between multiple PTS accounts.

Export Details
Quickly export customizable asset reports into Microsoft Excel.

Databooks
Create professional PDF reports containing asset details, service history and attached files.

Digital Documents
Publish and access a variety of digital documentation.

Email Notifications
Receive personal Maintenance, Repair and Operations (MRO) email notifications.

Tel: +45 63 12 83 00 | Email: ps@hymatik.com | www.hymatik.com | Hvidkaervej 27a, DK-5250 Odense SV, Denmark

Parker Worldwide

Europe, Middle East, Africa

AE – United Arab Emirates,
Dubai
Tel: +971 4 8127100
parker.me@parker.com

AT – Austria, St. Florian
Tel: +43 (0)7224 66201
parker.austria@parker.com

AZ – Azerbaijan, Baku
Tel: +994 50 2233 458
parker.azerbaijan@parker.com

BE/NL/LU – Benelux,
Hendrik Ido Ambacht
Tel: +31 (0)541 585 000
parker.nl@parker.com

BG – Bulgaria, Sofia
Tel: +359 2 980 1344
parker.bulgaria@parker.com

BY – Belarus, Minsk
Tel: +48 (0)22 573 24 00
parker.poland@parker.com

CH – Switzerland, Etoy
Tel: +41 (0)21 821 87 00
parker.switzerland@parker.com

CZ – Czech Republic, Klecany
Tel: +420 284 083 111
parker.czechrepublic@parker.com

DE – Germany, Kaarst
Tel: +49 (0)2131 4016 0
parker.germany@parker.com

DK – Denmark, Ballerup
Tel: +45 43 56 04 00
parker.denmark@parker.com

ES – Spain, Madrid
Tel: +34 902 330 001
parker.spain@parker.com

FI – Finland, Vantaa
Tel: +358 (0)20 753 2500
parker.finland@parker.com

FR – France, Contamine s/Arve
Tel: +33 (0)4 50 25 80 25
parker.france@parker.com

GR – Greece, Piraeus
Tel: +30 210 933 6450
parker.greece@parker.com

HU – Hungary, Budaörs
Tel: +36 23 885 470
parker.hungary@parker.com

IE – Ireland, Dublin
Tel: +353 (0)1 466 6370
parker.ireland@parker.com

IL – Israel
Tel: +39 02 45 19 21
parker.israel@parker.com

IT – Italy, Corsico (MI)
Tel: +39 02 45 19 21
parker.italy@parker.com

KZ – Kazakhstan, Almaty
Tel: +7 7273 561 000
parker.easteurope@parker.com

NO – Norway, Asker
Tel: +47 66 75 34 00
parker.norway@parker.com

PL – Poland, Warsaw
Tel: +48 (0)22 573 24 00
parker.poland@parker.com

PT – Portugal
Tel: +351 22 999 7360
parker.portugal@parker.com

RO – Romania, Bucharest
Tel: +40 21 252 1382
parker.romania@parker.com

RU – Russia, Moscow
Tel: +7 495 645-2156
parker.russia@parker.com

SE – Sweden, Borås
Tel: +46 (0)8 59 79 50 00
parker.sweden@parker.com

SK – Slovakia, Banská Bystrica
Tel: +421 484 162 252
parker.slovakia@parker.com

SL – Slovenia, Novo Mesto
Tel: +386 7 337 6650
parker.slovenia@parker.com

TR – Turkey, Istanbul
Tel: +90 216 4997081
parker.turkey@parker.com

UA – Ukraine, Kiev
Tel: +48 (0)22 573 24 00
parker.poland@parker.com

UK – United Kingdom, Warwick
Tel: +44 (0)1926 317 878
parker.uk@parker.com

ZA – South Africa, Kempton Park
Tel: +27 (0)11 961 0700
parker.southafrica@parker.com

North America

CA – Canada, Milton, Ontario
Tel: +1 905 693 3000

US – USA, Cleveland
Tel: +1 216 896 3000

Asia-Pacific

AU – Australia, Castle Hill
Tel: +61 (0)2-9634 7777

CN – China, Shanghai
Tel: +86 21 2899 5000

HK – Hong Kong
Tel: +852 2428 8008

IN – India, Mumbai
Tel: +91 22 6513 7081-85

JP – Japan, Tokyo
Tel: +81 (0)3 6408 3901

KR – South Korea, Seoul
Tel: +82 2 559 0400

MY – Malaysia, Shah Alam
Tel: +60 3 7849 0800

NZ – New Zealand, Mt Wellington
Tel: +64 9 574 1744

SG – Singapore
Tel: +65 6887 6300

TH – Thailand, Bangkok
Tel: +662 186 7000

TW – Taiwan, Taipei
Tel: +886 2 2298 8987

South America

AR – Argentina, Buenos Aires
Tel: +54 3327 44 4129

BR – Brazil, Sao Jose dos Campos
Tel: +55 800 727 5374

CL – Chile, Santiago
Tel: +56 2 623 1216

MX – Mexico, Toluca
Tel: +52 72 2275 4200

© 2020 Parker Hannifin Corporation. All rights reserved.

Catalogue MSG10-4096/UK, POD, 10/2020, ZZ

EMEA Product Information Centre
Free phone: 00 800 27 27 5374
(from AT, BE, CH, CZ, DE, DK, EE, ES, FI, FR, IE, IL, IS, IT, LU, MT, NL, NO, PL, PT, RU, SE, SK, UK, ZA)

US Product Information Centre
Toll-free number: 1-800-27 27 537

www.parker.com

Your local authorized Parker distributor