



aerospace
climate control
electromechanical
filtration
fluid & gas handling
hydraulics
pneumatics
process control
sealing & shielding

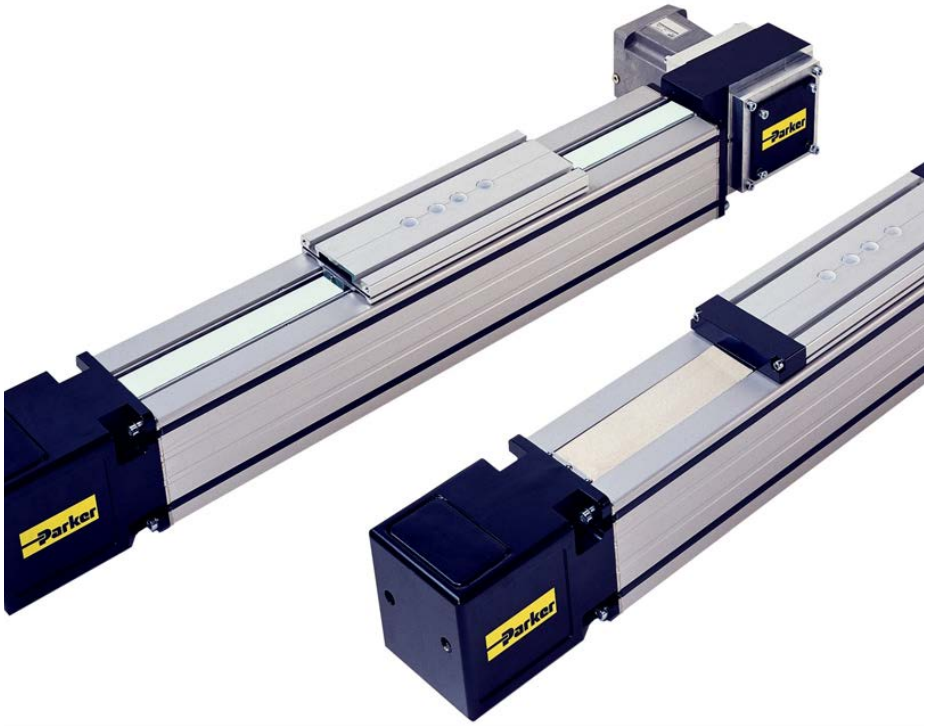



HPLA Linear Actuators

Toothed Belt



ENGINEERING YOUR SUCCESS.

WARNING — USER RESPONSIBILITY

FAILURE OR IMPROPER SELECTION OR IMPROPER USE OF THE PRODUCTS DESCRIBED HEREIN OR RELATED ITEMS CAN CAUSE DEATH, PERSONAL INJURY AND PROPERTY DAMAGE.

- This document and other information from Parker-Hannifin Corporation, its subsidiaries and authorized distributors provide product or system options for further investigation by users having technical expertise.
- The user, through its own analysis and testing, is solely responsible for making the final selection of the system and components and assuring that all performance, endurance, maintenance, safety and warning requirements of the application are met. The user must analyze all aspects of the application, follow applicable industry standards, and follow the information concerning the product in the current product catalog and in any other materials provided from Parker or its subsidiaries or authorized distributors.
- To the extent that Parker or its subsidiaries or authorized distributors provide component or system options based upon data or specifications provided by the user, the user is responsible for determining that such data and specifications are suitable and sufficient for all applications and reasonably foreseeable uses of the components or systems.

Tel: +45 63 12 83 00 | Email: ps@hymatik.com | www.hymatik.com | Hvidkaervej 27a, DK-5250 Odense SV, Denmark

Tel: +45 63 12 83 00 | Email: ps@hymatik.com | www.hymatik.com | Hvidkaervej 27a, DK-5250 Odense SV, Denmark

Parker Hannifin

The global leader in motion and control technologies

A world class player on a local stage

Global Product Design

Parker Hannifin has more than 40 years experience in the design and manufacturing of drives, controls, motors and mechanical products. With dedicated global product development teams, Parker draws on industry-leading technological leadership and experience from engineering teams in Europe, North America and Asia.

Local Application Expertise

Parker has local engineering resources committed to adapting and applying our current products and technologies to best fit our customers' needs.

Manufacturing to Meet Our Customers' Needs

Parker is committed to meeting the increasing service demands that our customers require to succeed in the global industrial market. Parker's manufacturing teams seek continuous improvement through the implementation of lean manufacturing methods throughout the process. We measure ourselves on meeting our customers' expectations of quality and delivery, not just our own. In order to meet these expectations, Parker operates and continues to invest in our manufacturing facilities in Europe, North America and Asia.

Electromechanical Worldwide Manufacturing Locations

Europe
Littlehampton, United Kingdom
Dijon, France
Offenburg, Germany
Filderstadt, Germany
Milan, Italy

Asia
Wuxi, China
Jangan, Korea
Chennai, India

North America
Rohnert Park, California
Irwin, Pennsylvania
Charlotte, North Carolina
New Ulm, Minnesota



Offenburg, Germany

Local Manufacturing and Support in Europe

Parker provides sales assistance and local technical support through a network of dedicated sales teams and authorized technical distributors throughout Europe.

For contact information, please refer to the Sales Offices on the back cover of this document or visit www.parker.com



Milan, Italy



Littlehampton, UK



Filderstadt, Germany



Dijon, France

Tel: +45 63 12 83 00 | Email: ps@hymatik.com | www.hymatik.com | Hvidkaervej 27a, DK-5250 Odense SV, Denmark

Contents

HPLA Linear Actuator 6

Product Description 6

Product Design 7

Technical Data 8

Load Bearing Capacity of Toothed Belt and Carriage 9
Drive Options 9
Transmissible Forces and Torques 10
Additional Mass Moment of Inertia due to Payload and Toothed Belt Mass 13
Definition of Stroke, Usable Stroke and Safety Travel 14

Dimensions 15

HPLA080 with Toothed Belt Drive 15
HPLA120 with Toothed Belt Drive 15
HPLA180 with Toothed Belt Drive 16
HPLA Idler Unit 17
Carriage with Bar 18

Possible Drive Combinations 20

Accessories 30

Assembly Angle Plate 30
T-Nuts and Bolts 31
Toe Clamp 32
External Stop Buffer 33
Longitudinal Flanges 33
Intermediate Shaft Bearing for Double Axes 34
Position Switch 35
Other Accessories 37

Order Code 38

Tel: +45 63 12 83 00 | Email: ps@hymatik.com | www.hymatik.com | Hvidkaervej 27a, DK-5250 Odense SV, Denmark

HPLA Linear Actuator

HPLA Dynamic High-Performance Linear Actuators

Product Description



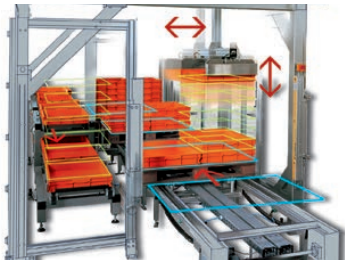



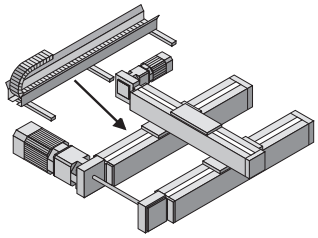

Typical areas of application...

within the scope of innovative and cost-effective machine and system design:

- **Handling technology** e.g. palletizing, material feed and removal
- **Textile machine construction:** e.g. cross-, length cutting and stacking, quilting, seaming
- **Process engineering:** e.g. varnishing, coating, gluing, engraving
- **Stock technology:** e.g. commissioning, stock keeping
- **Construction technology** e.g. encasing, inserting steel reinforcements into concrete
- **Clean room technology:** e.g. wafer transport, wafer coating
- **Machine tool manufacturing:** e.g. charging of the work pieces, changing the tools
- **Testing technology:** e.g. guiding of ultrasonic sensors

The highly dynamic linear actuator...

for guiding, moving and positioning, even over long travels, we offer:

- **Long strokes:**
- Up to 20 m
- **High speeds** in practice up to 5 m/s
- **High payloads** up to 1600 kg
- **Nominal drive torque** up to 244 Nm
- **Nominal thrust force** up to 5500 N
- **Repeatability** up to ±0.05 mm
- **High mechanic efficiency**
- **Three frame sizes:** HPLA080, HPLA120 and HPLA180 - allow the combination of actuators, (including other types of linear actuators), to create complete handling systems
- **FEM optimized extruded profile:** For highest resistance to flexing and torsion at minimized weight
- **Simple, non-critical installation and start up**

The modular concept ...

provides the ideal solution for every application:

The modular drive system:

- Toothed belt:
  - high dynamic performance
  - extremely low maintenance

The modular guiding system:

- either plastic roller guiding:
  - clean operation, as the travel surface is free of lubricants
  - low maintenance
- or steel roller guiding on an integrated steel strip:
  - high load bearing capacity
  - high stiffness

Several adaption options for the most different applications:

- Steel strip cover
- stainless VA version as a prerequisite for use in clean-room applications or in the food industry

Tel: +45 63 12 83 00 | Email: ps@hymatik.com | www.hymatik.com | Hvidkaervej 27a, DK-5250 Odense SV, Denmark

Product Design

HPLA with Toothed Belt Drive

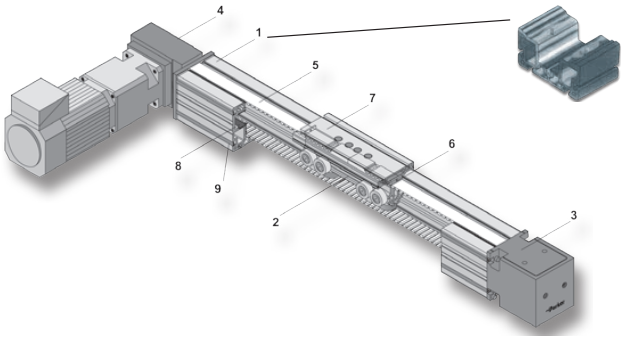

(1) The profile

The extruded aluminum profile is optimized for highest stiffness (torsion and deflection) at the lowest possible mass by means of the FEM method.
The modular concept permits to use the same profile for all HPLA versions:

- Drive version with toothed belt
- Guiding with plastic rollers on anodized aluminum
- Guiding with steel rollers on a steel strip integrated into the profile.

(2) The carriage

The aluminum carriage profile was also optimized by means of the FEM method. The rolling-contact plastic or steel rollers with lifetime lubrication are aligned backlash-free in all directions via eccentric. The carriage is available in 2 sizes as a standard carriage with 12 rollers or as an extended carriage with 24 rollers.

(3) The tensioning station

Easy-to-access, simple maintenance and mounting tensioning station for setting the required pre-tension of the toothed belt and its alignment (parallelism of the toothed pulleys).

(4) The drive station

The HPLA features several drive options. Everything is possible via a hollow shaft with bearing directly in the housing to the version with drive shaft on the left, on the right or on both sides.

(5) The toothed belt

The practically backlash-free toothed belt reinforced by steel tension cords guarantees high travel speeds and repeatabilities.

(6) Toothed belt clamping

The toothed belt fixing bracket and the wide area toothed belt clamp ensure a safe connection of toothed belt and carriage.
The clamping system allows the toothed belt to be changed without removing the load attachment plate. This means that it is in most cases not necessary to remove the mounted components.

(7) The load attachment plate

Many possibilities to mount parts by integrated longitudinal grooves at the upper side of the plate. In connection with the clamping profiles, this allows an easy integration into multi-axis systems.
Simple and variable fixing of tripping plate by means of longitudinal grooves on the sides of the profile.
The unit height and the fixing points remain unchanged even if a steel strip cover is mounted in retrospective.

(8) The steel strips

In the steel roller version, 6 steel strips are inserted into the profile.

(9) Mounting grooves

The profile is available in cross sections 80 x 80 (HPLA080), 120 x 120 (HPLA120), 180 x 180 (HPLA180). Mounting grooves on both sides and on the underside of the profile allow to mount additional mechanic components or to connect several linear actuators with the aid of nuts according to DIN 508. These grooves are also suitable as cable ducts if equipped with the available cover profile (9).

Available Options

- Steel strip cover
- Longitudinal flange(s) permit(s) to extend the profile for long strokes
- Stainless version for rough environments or as a prerequisite for use in clean rooms or in the food or pharmaceutical industry

Tel: +45 63 12 83 00 | Email: ps@hymatik.com | www.hymatik.com | Hvidkaervej 27a, DK-5250 Odense SV, Denmark

Technical Data

Frame size		HPLA080		HPLA120		HPLA180	
	Drive	Toothed belt		Toothed belt		Toothed belt	
	Guiding rollers	Plastic	Steel	Plastic	Steel	Plastic	Steel
	Unit						
Travel lengths and speeds							
Max.travel speed	[m/s]	5.0					
Max. acceleration	[m/s²]	10.0					
Max. travel, standard carriage (S/T) [2] - with one profile - with steel strip cover	[mm]	5610 5540	5590 5520	9560 9470	9530 9440	9440 9240	9400 9200
Max. travel, extended carriage (S/T) [2] - with one profile - with steel strip cover	[mm]	5460 5390	5440 5370	9360 9270	9330 9240	9140 8940	9100 8900
Overall dimensions and physical data of guiding profile							
Cross-section	[mmxmm]	80 x 80		120 x 120		180 x 180	
Moment of Inertia Ix [4]	[10⁴mm⁴]	139		724		3610	
Moment of Inertia Iy [4]	[10⁴mm⁴]	165		830		4077	
E-modulus (aluminum)	[N/mm²]	$0.72 * 10^5$					
Forces, torques and efficiency							
Nominal drive torque	[Nm]	26.5		74.2		244	
Max. drive torque	[Nm]	47.4		131.4		368	
Max. thrust force (with hollow shaft bearing)*	[N]	1114		2234		5457	
Repeatability -up to 3 m [3] -as from 3 m [3]	[mm]	±0.05 ±0.1		±0.05 ±0.1		±0.05 ±0.1	
Efficiency	[%]	95		95		95	
Toothed pulley and toothed belt data							
Travel distance per revolution	[mm/rev]	180		270		420	
Number of teeth of pulley	-	18		27		21	
Toothed belt width / pitch	[mm]	25 / 10		32 / 10		56 / 20	
Weight of toothed belt	[kg/m]	0.166		0.213		0.550	
Effective radius of the drive pinion (R_A)	[mm]	28.7		43.0		66.8	
Weights and mass moments of inertia							
Weight of base unit without stroke							
HPLA with standard carriage (S) - with steel strip cover	[kg]	6.0 6.8	6.6 7.5	18.6 20.2	19.8 21.6	49.8 57.2	53.4 61.6
HPLA with extended carriage (E) - with steel strip cover	[kg]	7.8 8.6	8.6 9.5	23.5 25.2	25.2 27.1	67.4 74.8	72.6 80.9
Mass of carriage + load attachment plate (S) - with steel strip cover	[kg]	1.5 1.7	1.6 1.8	5.5 5.8	5.7 6.0	11.4 12.3	11.8 12.6
Mass of carriage + load attachment plate (E) - with steel strip cover	[kg]	2.4 2.6	2.6 2.8	8.5 8.8	8.9 9.2	20.3 21.1	21.0 21.8
Mass of drive module	[kg]	-	-	-	-	-	-
Additional weight per meter of stroke - with steel strip cover	[kg/m]	6.0 6,1	7.2 7.3	13.5 13.7	15.4 15.5	29.2 29.4	33.4 33.6
Mass moment of inertia with respect to drive shaft [1]							
HPLA with standard carriage (S) - with steel strip cover	[kgmm²]	1600 1780	1660 1840	13600 14200	14000 14600	66800 72500	69500 74300
HPLA with extended carriage (E) - with steel strip cover	[kgmm²]	2360 2540	2470 2650	19100 19700	19800 20400	107400 112100	110700 115400

*for additional bearings see chapter “Transmissible Forces and Torques” on page 16.

1) Additional mass moment of inertia caused by the payload and belt mass of a toothed belt drive: see on page 19
2) Longitudinal flanges for longer strokes are possible. The following constraints are to be expected with toothed belt driven linear actuators: Maximum permissible load, drive torque, speed, acceleration and repeatability (see page 42). Linear actuators with rack-and-pinion drive feature an infinite travel on the part of the actuator - it depends solely on the energy supply of the drive.
3) At a constant ambient and operating temperature of the actuator. Determined in accordance with ISO 230-2
4) 2. area moment of inertia

→ Technical data; safety factor taken into consideration S=1. Data applies to a temperature range between -10 °C and +40 °C. The technical data apply under normal conditions and only for the individual operating and load mode. In the case of compound loads, it is necessary to verify in accordance with normal physical laws and technical standards whether individual ratings should be reduced. In case of doubt please contact Parker Hannifin.

Tel: +45 63 12 83 00 | Email: ps@hymatik.com | www.hymatik.com | Hvidkaervej 27a, DK-5250 Odense SV, Denmark

Load Bearing Capacity of Toothed Belt and Carriage

Operating force Fx transmitted by the toothed belt / pretension

The operating force Fx transmitted by the toothed belt depends on its pretension. If not stated otherwise, the HPLA is furnished with a default pretension. With this default pretension, the HPLA can maximally transmit the thrust force F_nominal. If a higher thrust force is required, the toothed belt pretension is increased and forces up to F_max can be transmitted. If the operating force Fx is higher than the belt pretension, toothed belt spread might be the result.

Life

The lifetime (s_nominal / s_max) of the drive train (with the exception of the guiding system and, if the pulley is mounted directly on the drive shaft, the gear bearings), depends on the pretension and on the operating force present.

Forces and torques transmitted by the carriage

Forces (Fy/Fz) and torques (Mx/My/Mz) transferred by the carriage are speed-dependent. The graphs shown in the diagrams only apply to a standard carriage (S or T).
In the case of extended carriages (E or F), all values with the exception of Fx can be doubled if the load is introduced in pairs or is distributed evenly over the entire length of the carriage.
The curves show the maximum load-bearing capacity of a carriage in one direction of force or torque. If several loads are applied in different directions, the values specified in the curves must be derated, i.e. the load or speed should be reduced.

Drive Options

The drive mounting side left (L) or right (R) is defined looking from the tensioning station to the drive station.

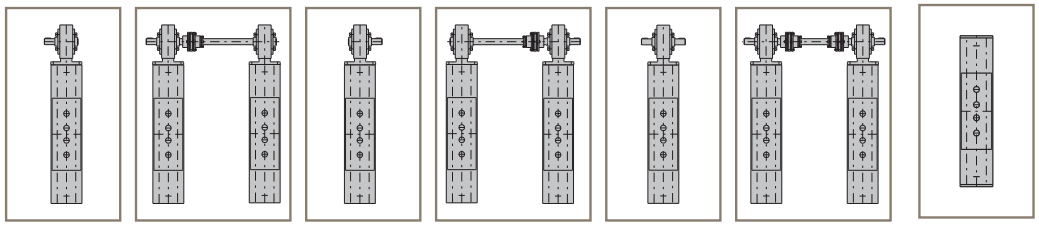

SL Single axis | **SL** Double axis | **SR** Single axis | **SR** Double axis | **SB** Single axis | **SB** Double axis | **NN** Idler

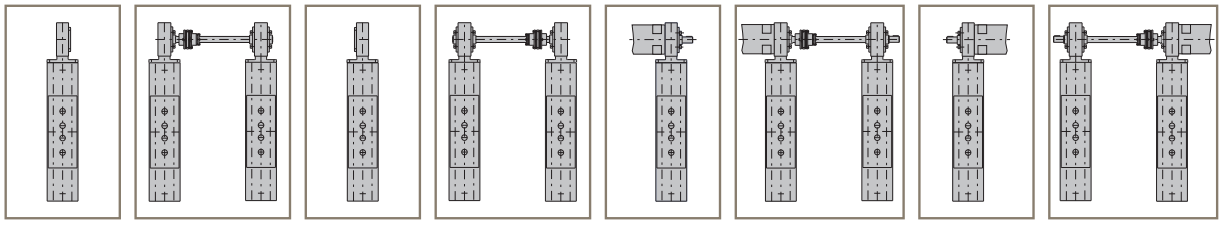

NL Single axis | **NL** Double axis | **NR** Single axis | **NR** Double axis | **LR** Single axis | **LR** Double axis (on request) | **RL** Single axis | **RL** Double axis (on request))

Tel: +45 63 12 83 00 | Email: ps@hymatik.com | www.hymatik.com | Hvidkaervej 27a, DK-5250 Odense SV, Denmark

Transmissible Forces and Torques

HPLA080

Please note the explanations in the "Load Bearing Capacity of Toothed Belt and Carriage" chapter on page 15!

	Transmissible thrust force (Fx) (for double axes: per belt drive)		Nominal lifetime[1)]	
Drive Option (=> Chapter "Drive Option")	**F_nominal [N]**	**F_max [N]**	**s_nominal [km]**	**s_max [km]**
Single/double axis				
NL/NR / LR/RL (hollow shaft bearing)	925	1114	81 000	46 000
SL/SR / SB (massive shaft bearing)	925	1114	81 000	46 000

1) Basis of the nominal life time calculation for rolling-contact bearings: At least 90 % of all bearings attain or even exceed the nominal lifetime, in part even by far.

Load bearing capacity HPLA080 (Fy and Fz)

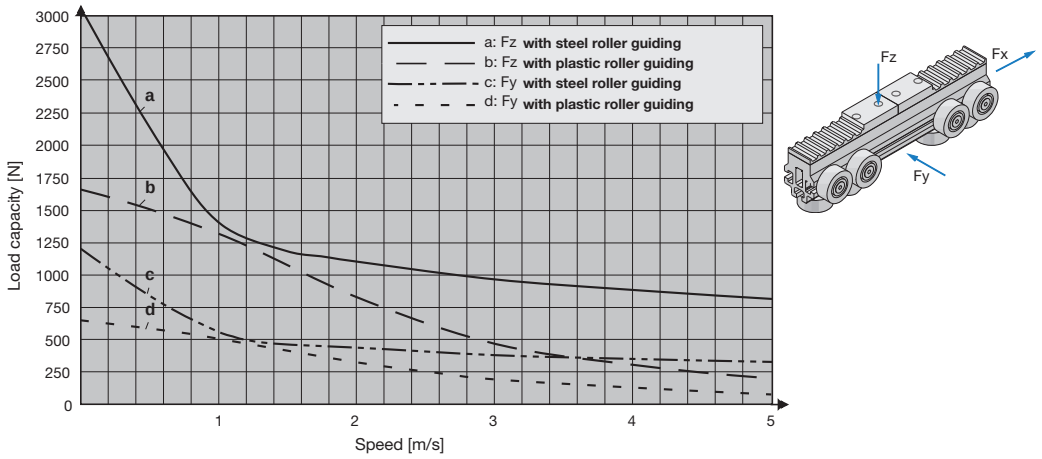

Moment load capacity HPLA080 (Mx, My and Mz)

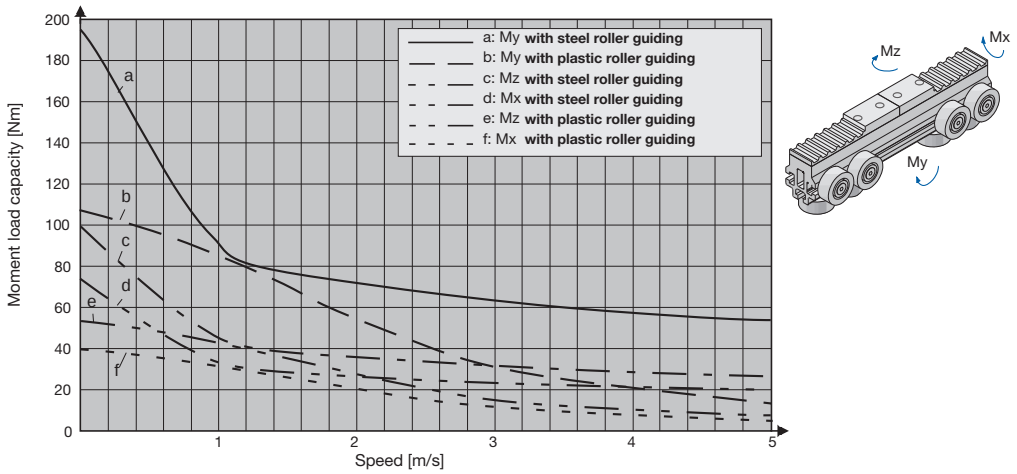

Tel: +45 63 12 83 00 | Email: ps@hymatik.com | www.hymatik.com | Hvidkaervej 27a, DK-5250 Odense SV, Denmark

HPLA120

Please note the explanations in the "Load Bearing Capacity of Toothed Belt and Carriage" chapter on page 15!

	Transmissible thrust force (Fx) (for double axes: per belt drive)		Nominal lifetime[1)]	
Drive Option (=> Chapter "Drive Option")	F_nominal [N]	F_max [N]	s_nominal [km]	s_max [km]
Single/double axis				
NL/NR / LR/RL (hollow shaft bearing)	1696	2234	85 000	37 000
SL/SR / SB (massive shaft bearing)	1696	2234	85 000	37 000

1) Basis of the nominal life time calculation for rolling-contact bearings: At least 90 % of all bearings attain or even exceed the nominal lifetime, in part even by far.

Load bearing capacity HPLA120 (Fy and Fz)

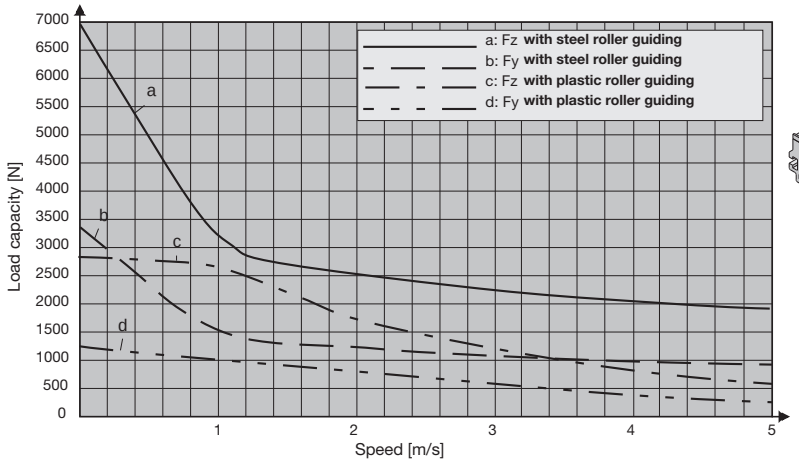

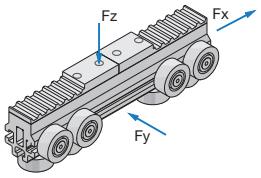

Moment load capacity HPLA120 (Mx, My and Mz)

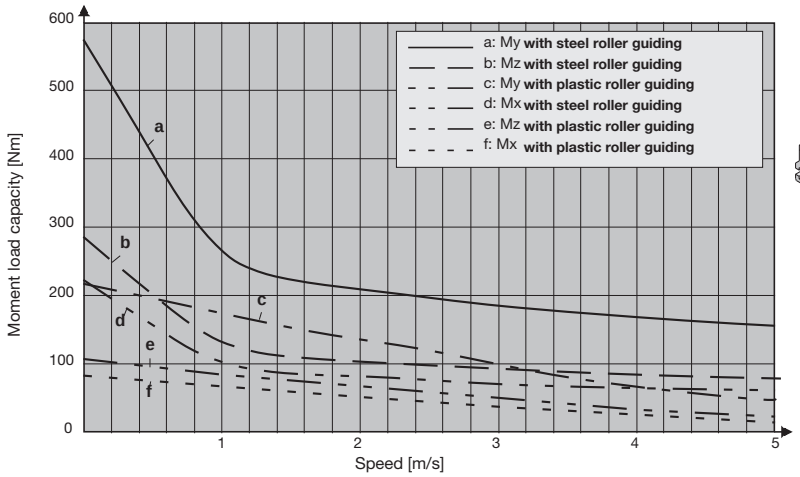

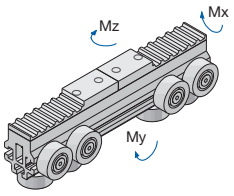

Tel: +45 63 12 83 00 | Email: ps@hymatik.com | www.hymatik.com | Hvidkaervej 27a, DK-5250 Odense SV, Denmark

HPLA180 (with toothed belt drive)

Please note the explanations in the "Load Bearing Capacity of Toothed Belt and Carriage" chapter on page 15!

	Transmissible thrust force (Fx) (for double axes: per belt drive)		Nominal lifetime[1)]	
Drive Option (=> Chapter "Drive Option")	F_nominal [N]	F_max [N]	s_nominal [km]	s_max [km]
Single/double axis				
NL/NR / LR/RL (hollow shaft bearing)	4169	5457	100 000	45 000
SL/SR / SB (massive shaft bearing)	3770	3770	136 000	136 000

1) Basis of the nominal life time calculation for rolling-contact bearings: At least 90 % of all bearings attain or even exceed the nominal lifetime, in part even by far.

Load bearing capacity HPLA180 (Fy and Fz)

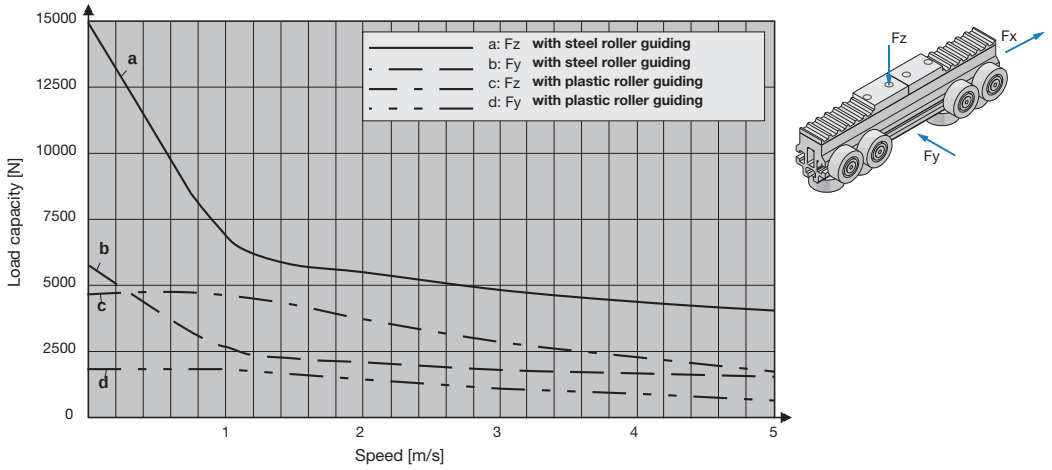

Moment load capacity HPLA180 (Mx, My and Mz)

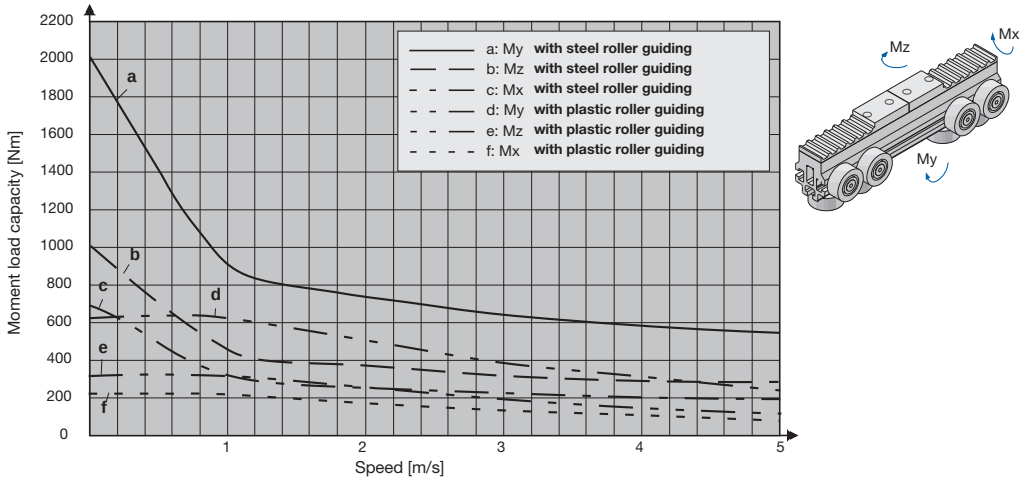

Tel: +45 63 12 83 00 | Email: ps@hymatik.com | www.hymatik.com | Hvidkaervej 27a, DK-5250 Odense SV, Denmark

Additional Mass Moment of Inertia due to Payload and Toothed Belt Mass

For linear actuators with toothed belt drive it applies:

$J_Z = J_{NL} + J_R$
$J_{NL} = m_{NL} \times R_A^2$
$J_R = m_R \times R_A^2$
$m_R = L_R \times m_{R1M}$
$L_R \approx 2 \times \text{Stroke} + L_{R0H}$

J_Z = Additional mass moment of inertia [kgmm²]
J_{NL} = Additional mass moment of inertia caused by the payload [kgmm²]
J_R = Additional mass moment of inertia caused by the belt mass [kgmm²]
m_{NL} = Mass of the payload moved by the linear actuator [kg]
m_R = Mass of the toothed belt [kg]
m_{R1M} = Mass of the toothed belt per meter of length [kg/m] see page 14 "Technical Data"
L_R = Length of the toothed belt [m]
L_{R0H} = Toothed belt length for a linear actuator without stroke (see "Belt length L_{ROH}")
R_A = Effective radius of the toothed pulley [mm] see page 14 "Technical Data"

Standard HPLA

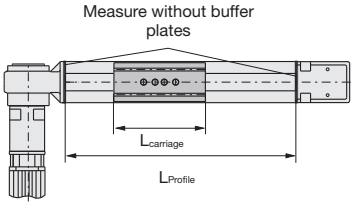

HPLA with steel strip cover

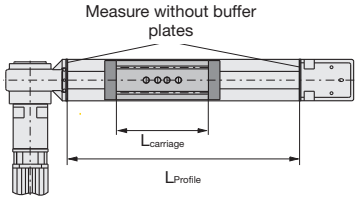

Belt length L_{ROH}

HPLA080: 2 x $L_{Profile}$ - $L_{carriage}$ + 570 mm
HPLA120: 2 x $L_{Profile}$ - $L_{carriage}$ + 740 mm
HPLA180: 2 x $L_{Profile}$ - $L_{carriage}$ + 1190 mm

Tel: +45 63 12 83 00 | Email: ps@hymatik.com | www.hymatik.com | Hvidkaervej 27a, DK-5250 Odense SV, Denmark

Definition of Stroke, Usable Stroke and Safety Travel

- **Usable stroke:**
  The usable stroke is the distance which you need to move in your application. It is always shorter than the stroke.
- **Stroke:**
  The stroke to be indicated in the order code is the maximum possible stroke between the internal end stops. It is composed of

Stroke = Usable stroke + right safety travel + left safety travel + 20 mm*1

1* We recommend to include an extra travel of approx. 10 mm on each side in order to compensate the switching hysteresis of the limit switches or - depending on the controller - as an addition to the software end limit.

The right and left safety travel is the distance needed in order to decelerate the actuator after activating a limit switch without collision. Fmax shows the maximum permissible braking force for each axis (at the set maximum permissible belt pretension) and may in no case be exceeded (with a lower belt tension, the values for Fx must be derated accordingly). If a braking force lower than Fmax results from the maximum possible braking torque of the drive or of a brake, the safety travel is increased accordingly. Please do also consider the controller reaction times. If needs be, do mount additional buffers.

Calculation of the minimum safety travel required

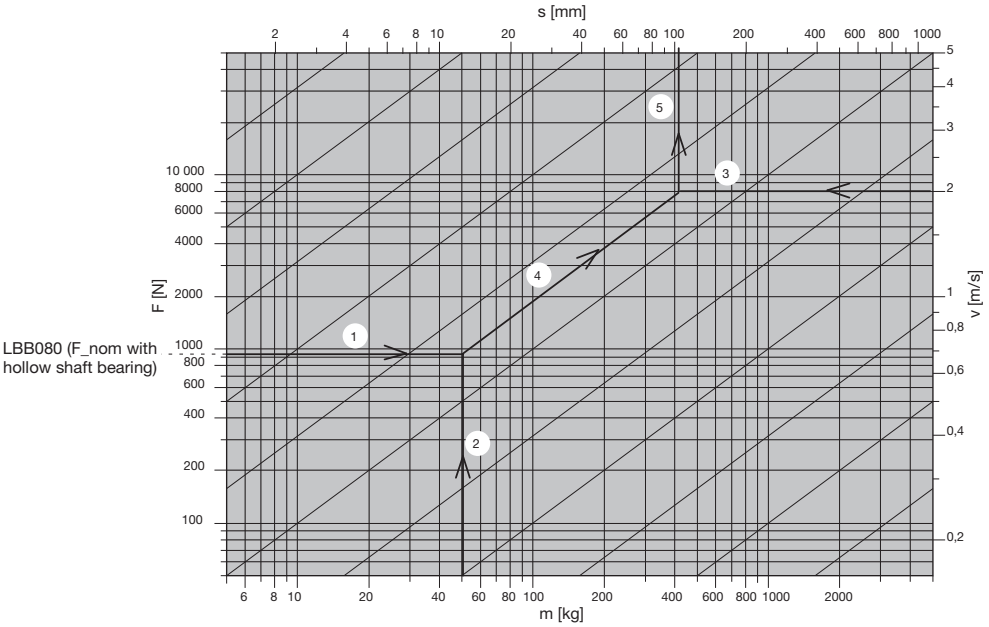

Key:
- m: Payload in kg (for the HPLA with tooth rack, please add the weight of the motor and of the gear to the payload).
- v: Travel speed of the actuator before the braking sequence in m/s.
- F: Braking force of the drive within the emergency stop ramp in N.
- s: The safety travel s in mm resulting from moved mass, speed and braking force.

Example:
The example in the diagram shows the determination of the safety travel for an HPLA080 with a payload of 50 kg (2), braked down from a speed of 2 m/s (3) with the permissible thrust force F_nominal (925 N) (1) for this axis. The required braking distance is approx. 110 mm (5) rounded up.

Tel: +45 63 12 83 00 | Email: ps@hymatik.com | www.hymatik.com | Hvidkaervej 27a, DK-5250 Odense SV, Denmark

Dimensions

Dimensions [mm]
Schematic representations

HPLA080 with Toothed Belt Drive (LBB080)

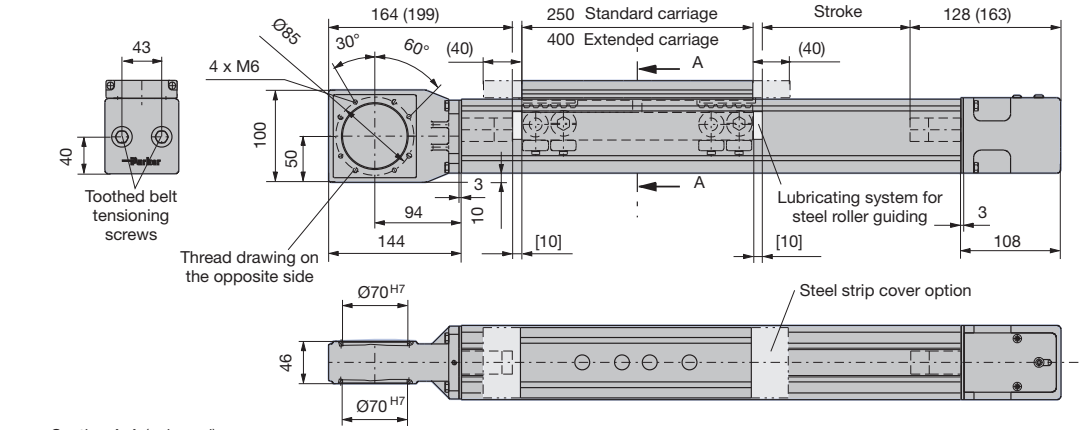

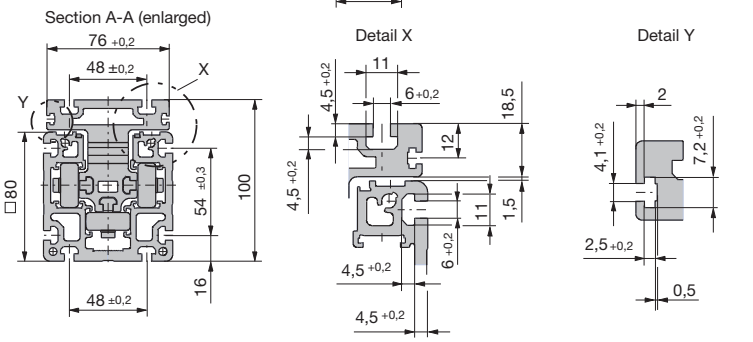

Large grooves (see detail X) suitable for T-nuts in accordance with DIN 508

Dimensions ( ) are valid in connection with a steel strip cover

Dimensions [ ] are valid in connection with steel roller guiding

HPLA120 with Toothed Belt Drive (LBB120)

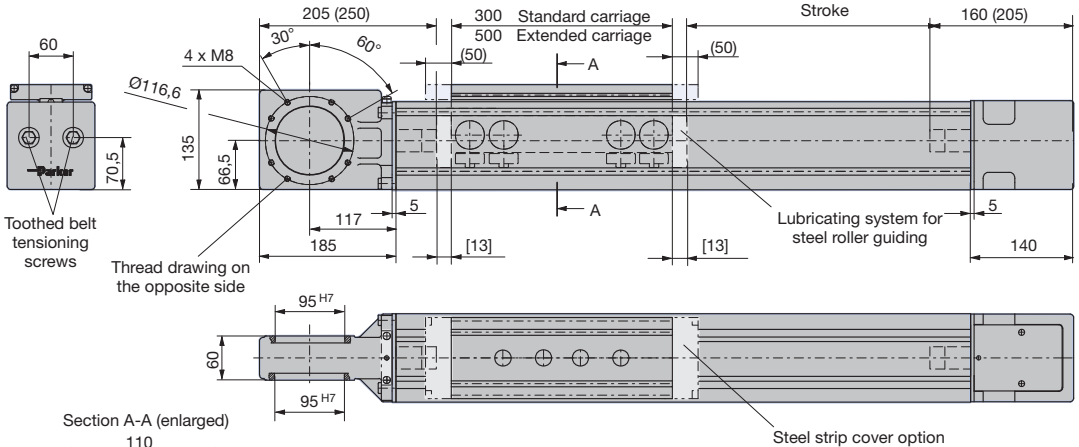

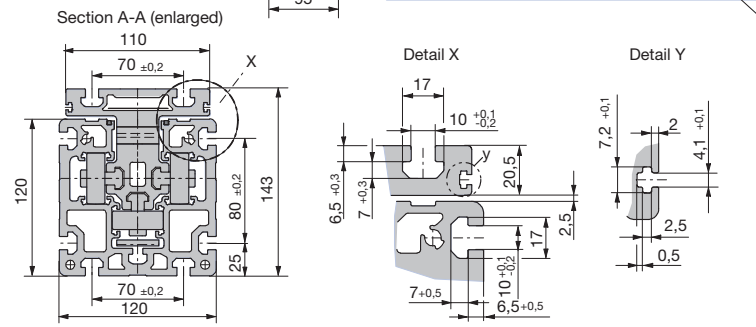

Large grooves (see Detail X) suitable for T-nuts in accordance with DIN 508 and T-bolts in accordance with DIN 787

Dimensions ( ) are valid in connection with a steel strip cover

Dimensions [ ] are valid in connection with steel roller guiding

Tel: +45 63 12 83 00 | Email: ps@hymatik.com | www.hymatik.com | Hvidkaervej 27a, DK-5250 Odense SV, Denmark

HPLA180 with Toothed Belt Drive (LBB180)

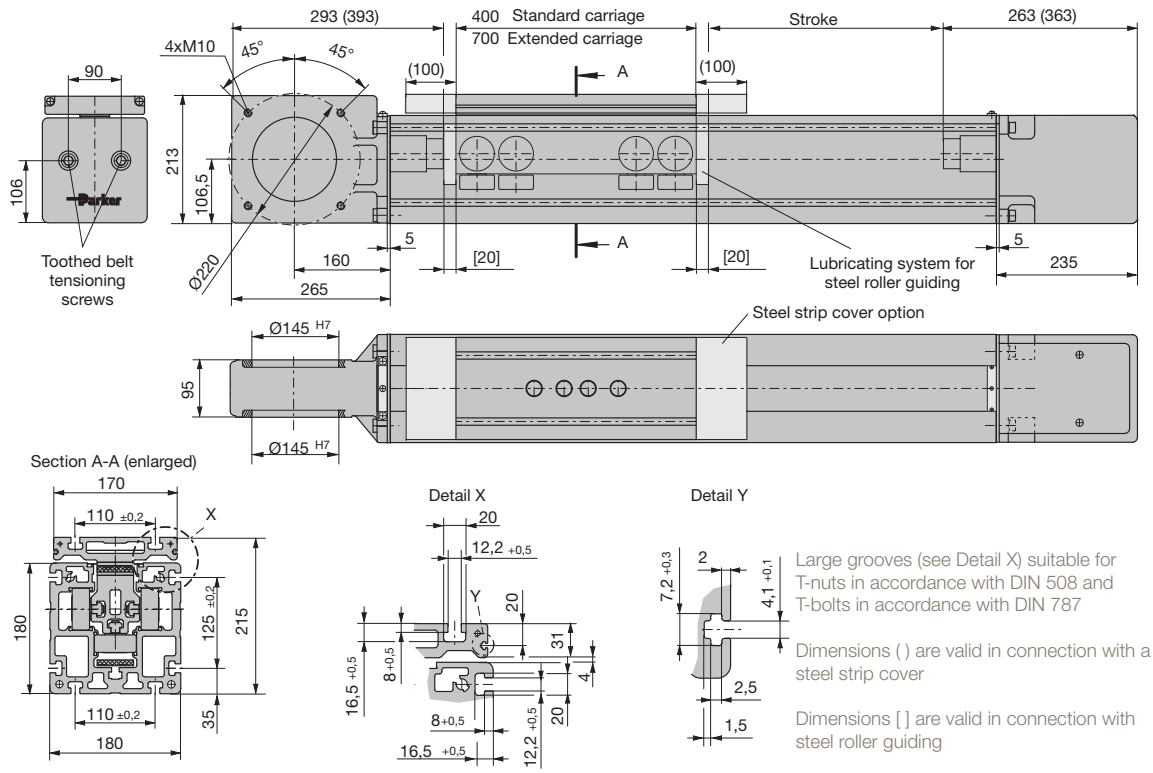

Large grooves (see Detail X) suitable for T-nuts in accordance with DIN 508 and T-bolts in accordance with DIN 787

Dimensions ( ) are valid in connection with a steel strip cover

Dimensions [ ] are valid in connection with steel roller guiding

Tel: +45 63 12 83 00 | Email: ps@hymatik.com | www.hymatik.com | Hvidkaervej 27a, DK-5250 Odense SV, Denmark

HPLA Idler Unit

The HPLA is also available as a driveless idler unit. In this case, it serves as a mere guiding. The profile cross section and carriage dimensions correspond to those of the driven axes.

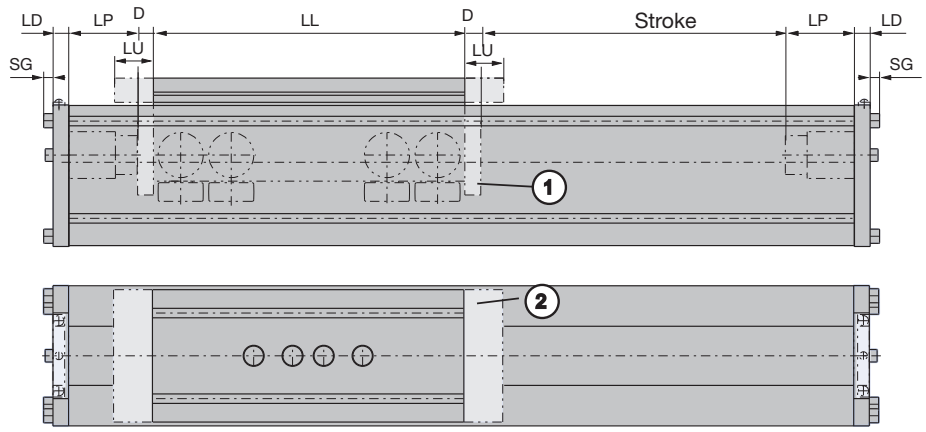

1 Lubricating system for steel rollers
2 Steel strip cover option

Axis type	Without steel strip cover						With steel strip cover					
	LD	LP	DS	LL	LU	SG	LD	LP	DS	LL	LU	SG
HPLA-LBN080SP	10	20	-	250	-	4	10	55	-	250	40	4
HPLA-LBN080SH			10						10			
HPLA-LBN080EP			-	400					-	400		
HPLA-LBN080EH			10						10			
HPLA-LBN120SP	15	20	-	300	-	6	15	65	-	300	50	6
HPLA-LBN120SH			13						13			
HPLA-LBN120EP			-	500					-	500		
HPLA-LBN120EH			13						13			
HPLA-LBN180SP	20	28	-	400	-	12	20	128	-	400	100	12
HPLA-LBN180SH			20						20			
HPLA-LBN180EP			-	700					-	700		
HPLA-LBN180EH			20						20			

Tel: +45 63 12 83 00 | Email: ps@hymatik.com | www.hymatik.com | Hvidkaervej 27a, DK-5250 Odense SV, Denmark

Carriage with Bar

Carriage T/F without load attachment plate; thread drawings for mounting the load

For an HPLA without load attachment plate, a bar is required as a replacement for the belt clamping.
In order to attach your own loads, the threads in the carriage are accessible through bores in the strip.

HPLA080 / HPLA120

Standard carriage with bar (T)

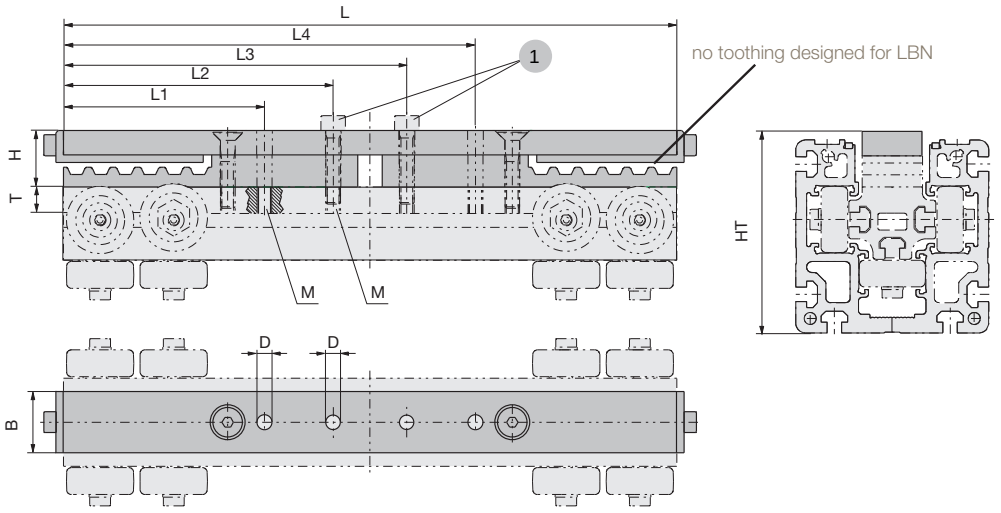

Axis type	Unit	L	L1	L2	L3	L4	B	M	T	H	HT	D
HPLA080T (LBB/LBN)	[mm]	250	82	110	140	168	25	M6	11	23	83.5	Ø6.4
HPLA120T (LBB/LBN)	[mm]	300	90	125	175	210	32	M8	14	23	124	Ø8.2

Extended carriage with bar (F)

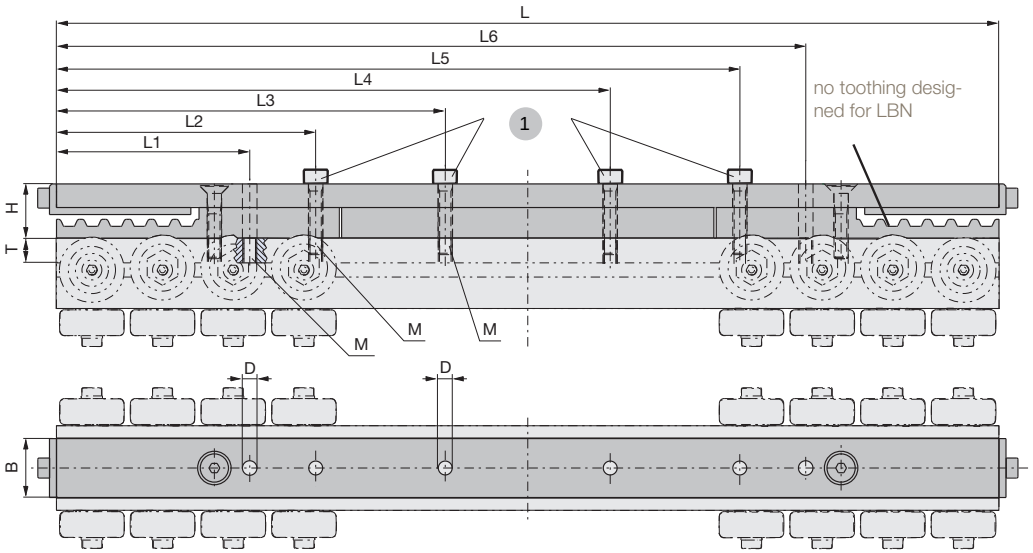

Axis type	Unit	L	L1	L2	L3	L4	L5	L6	B	M	T	H	D
HPLA080F (LBB/LBN)	[mm]	400	82	110	165	235	290	318	25	M6	11	23	Ø6.4
HPLA120F (LBB/LBN)	[mm]	500	90	125	195	305	375	410	32	M8	14	23	Ø8.2

1 The retaining screws are mandatory; they may however be replaced by your own screws.

Tel: +45 63 12 83 00 | Email: ps@hymatik.com | www.hymatik.com | Hvidkaervej 27a, DK-5250 Odense SV, Denmark

HPLA180

Standard carriage with bar (T)

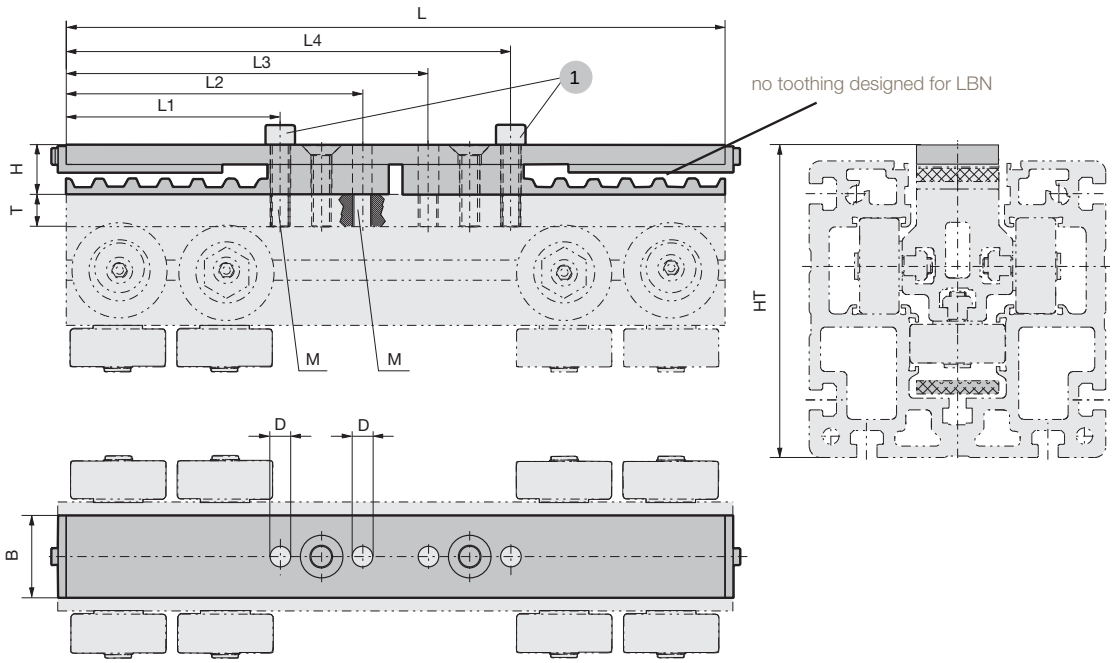

Axis type	Unit	L	L1	L2	L3	L4	B	M	T	H	HT	D
HPLA180T (LBB/LBN)	[mm]	400	130	180	220	270	50	M12	20	33	195.5	Ø12.5

Extended carriage with bar (F)

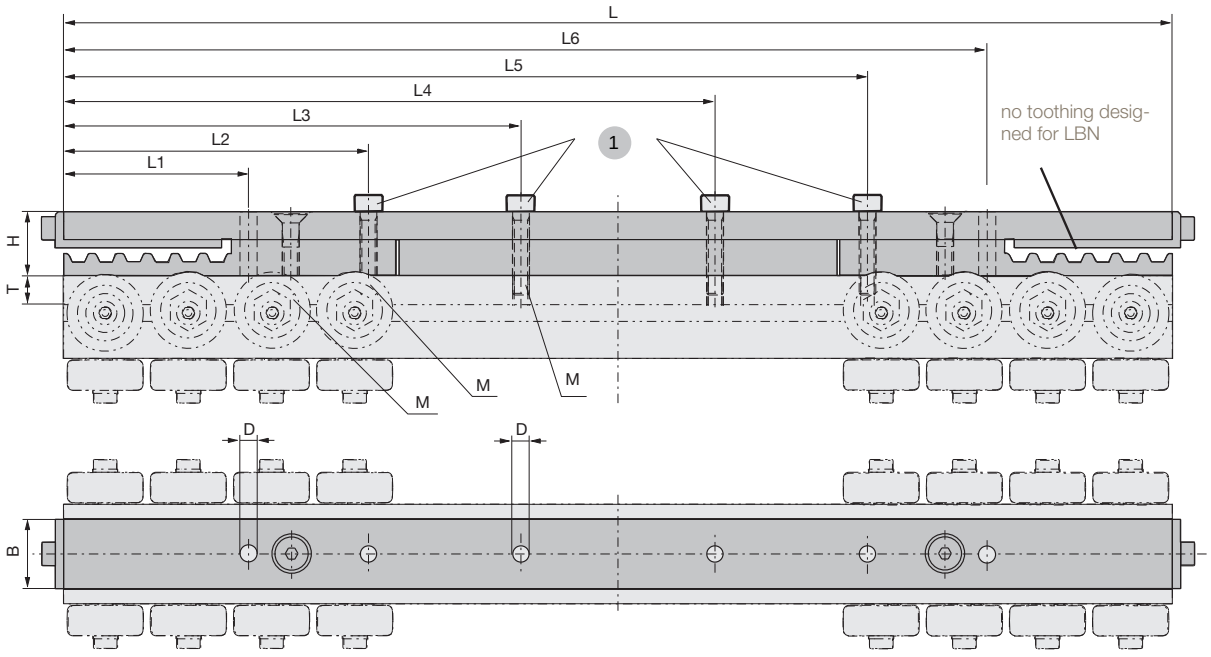

Axis type	Unit	L	L1	L2	L3	L4	L5	L6	B	M	T	H	D
HPLA180F (LBB/LBN)	[mm]	700	130	180	290	410	520	570	50	M12	20	33	Ø12.5

1 The retaining screws are mandatory; they may however be replaced by your own screws.

Tel: +45 63 12 83 00 | Email: ps@hymatik.com | www.hymatik.com | Hvidkaervej 27a, DK-5250 Odense SV, Denmark

Possible Drive Combinations

Dimensions [mm]
Schematic representations

HPLA080 (LBB080)

Drive option[1] → / ↓ Drive flange[1]	SL/SR/SB Housing with drive shaft for gearboxes or motors with hollow shaft	NL/NR Version with supported hollow shaft without drive - prepared for drive mounting	LR/RL Supported hollow shaft, A, B, Q, R, K, M Additional drive shaft
A (for drive shaft Ø16, max. 33 mm long)	not possible	Figure 9	Figure 3
B (for drive shaft Ø22, max. 43 mm long)		Figure 10 Figure 23: Double axis drive side	Figure 4 Figure 23: Double axis drive side
K (for PS60)		Figure 11	Figure 5
M (for PS90)		Figure 12 Figure 24: Double axis drive side	Figure 6 Figure 24: Double axis drive side
E (for drive shaft Ø19, max. 40 mm long)		Figure 15	non standard
F (for drive shaft Ø24, max. 50 mm long)		Figure 16	non standard
Q (for PE4)		Figure 13	Figure 7
R (for PE5)		Figure 14	Figure 8
N (without flange)	Figure 1, Figure 2	-	-

1 Short designations from the order code on page 54

Drive housing with drive shaft/drive flange

Housing with drive shaft on one side: SL/SR

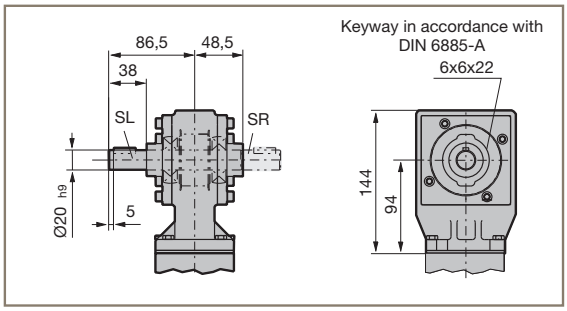

Figure 1

Housing with drive shaft on both sides: SB

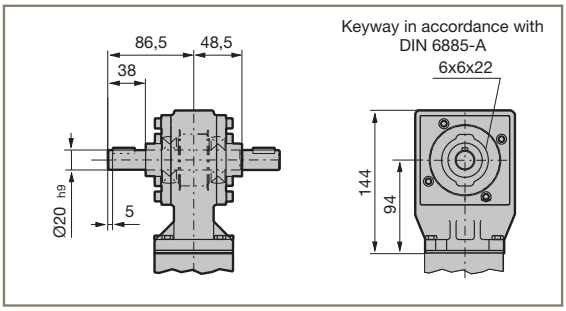

Figure 2

Drive option: LR/RL
Drive flange A

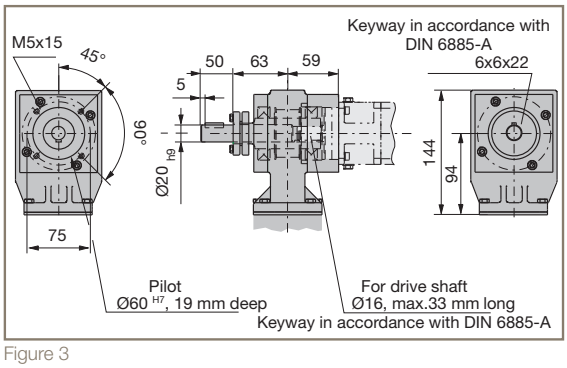

Figure 3

Drive option: LR/RL
Drive flange B

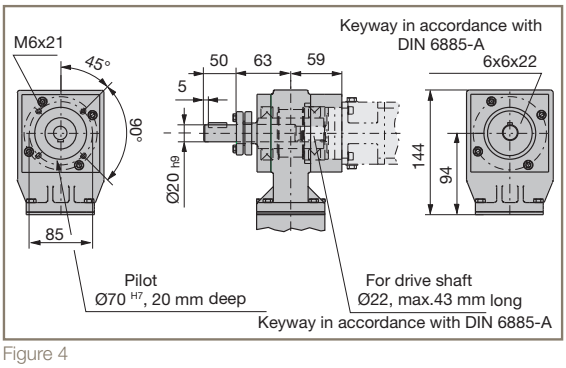

Figure 4

Tel: +45 63 12 83 00 | Email: ps@hymatik.com | www.hymatik.com | Hvidkaervej 27a, DK-5250 Odense SV, Denmark

Drive option: LR/RL
Drive flange K

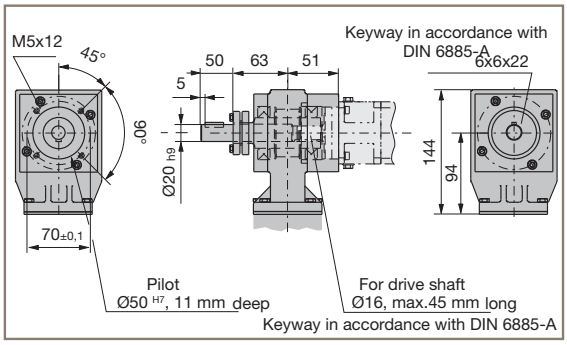

Figure 5

Drive option: LR/RL
Drive flange M

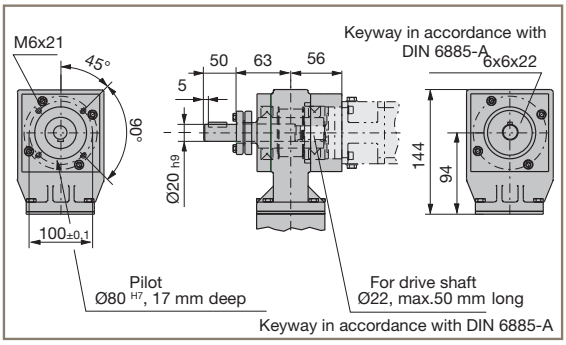

Figure 6

Drive option: LR/RL
Drive flange Q for PE4

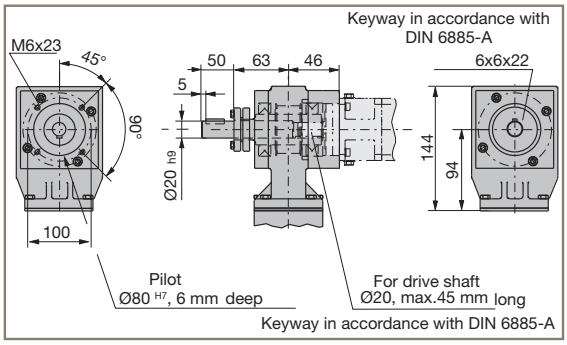

Figure 7

Drive option: LR/RL
Drive flange R for PE5

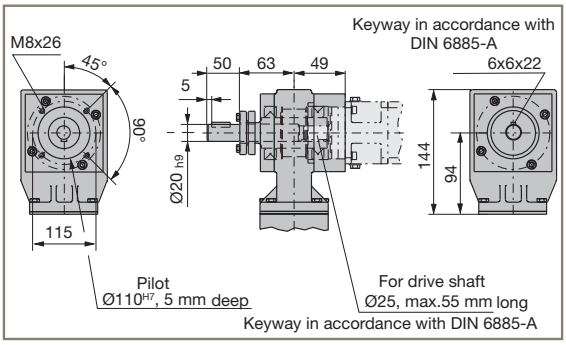

Figure 8

Single axis with hollow shaft or pulley directly on the shaft

Drive option: NL/NR
Drive flange A

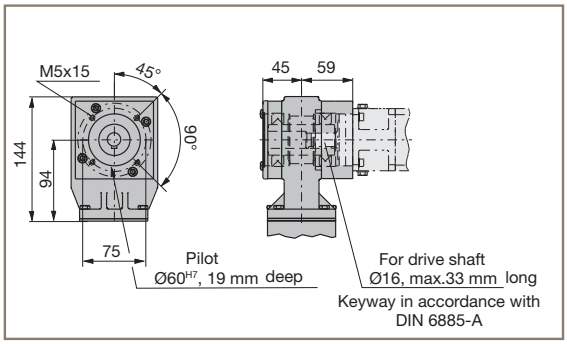

Figure 9

Drive option: NL/NR
Drive flange B

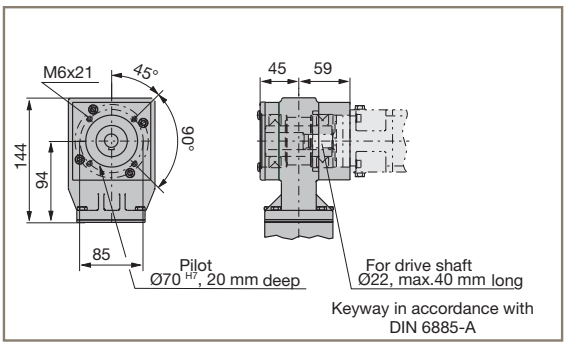

Figure 10

Tel: +45 63 12 83 00 | Email: ps@hymatik.com | www.hymatik.com | Hvidkaervej 27a, DK-5250 Odense SV, Denmark

Drive option: NL/NR
Drive flange K for PS60

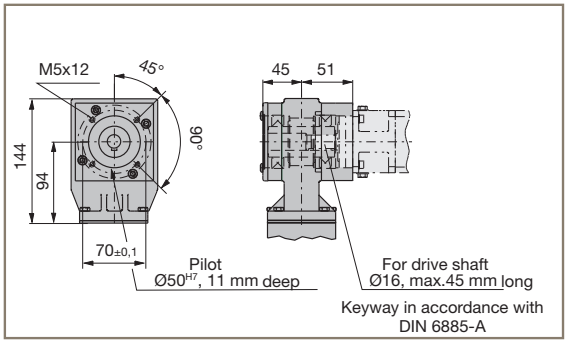

Figure 11

Drive option: NL/NR
Drive flange M for PS90

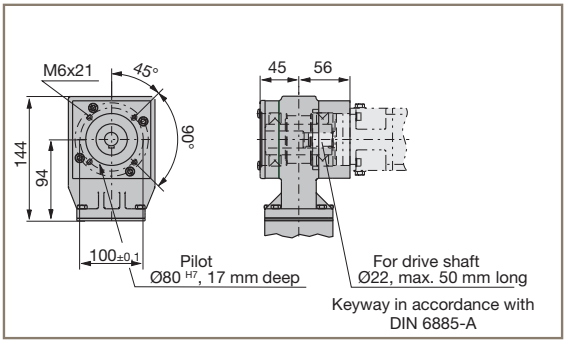

Figure 12

Drive option: NL/NR
Drive flange Q for PE4

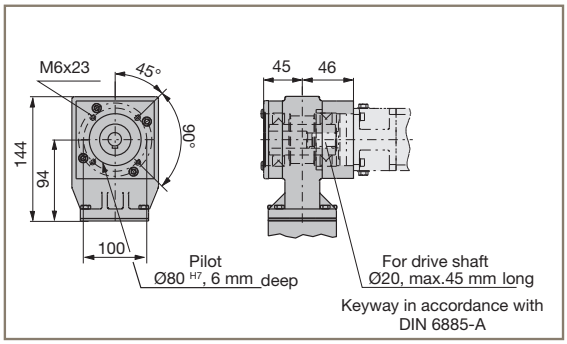

Figure 13

Drive option: NL/NR
Drive flange R for PE5

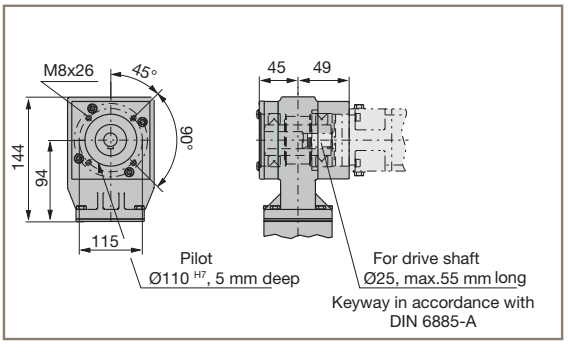

Figure 14

Drive option: NL/NR
Drive flange E

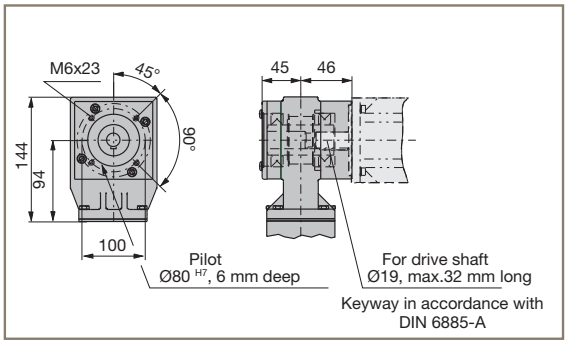

Figure 15

Drive option: NL/NR
Drive flange F

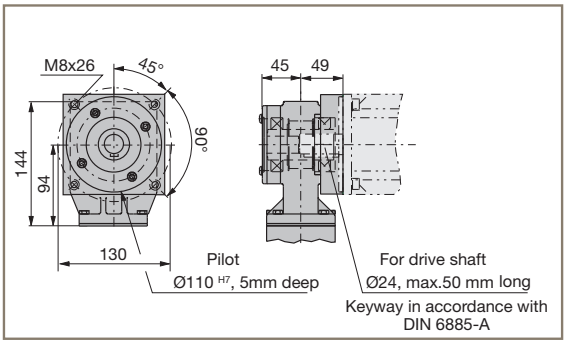

Figure 16

Tel: +45 63 12 83 00 | Email: ps@hymatik.com | www.hymatik.com | Hvidkaervej 27a, DK-5250 Odense SV, Denmark

Double axis

Drive option: NL/NR or LR/RL (double axis drive side)
Drive flange B

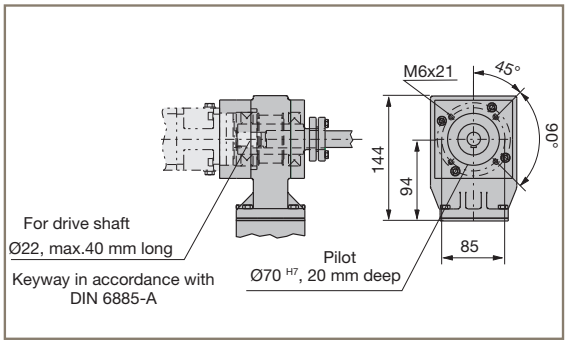

Figure 23

Drive option: NL/NR or LR/RL (double axis drive side)
Drive flange M for PS90 double axis drive side

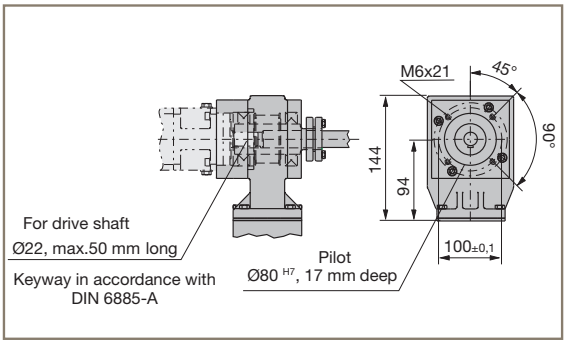

Figure 24

Center distance A:
Drive flange B

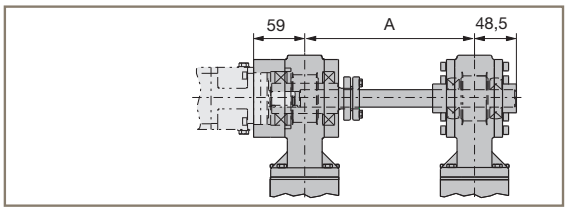

Center distance A between 120-350 mm

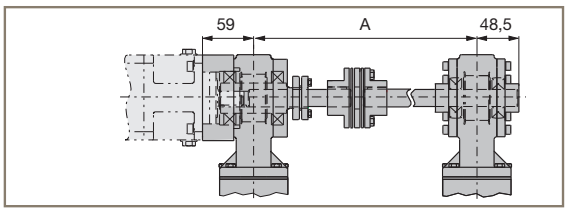

Center distance A between 350-600 mm

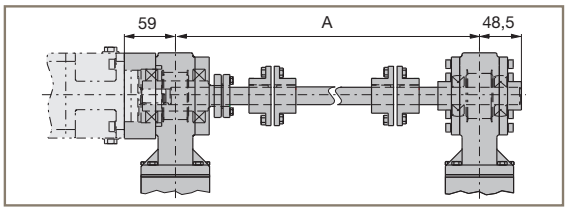

Center distance A larger than 600 mm

Center distance A:
Drive flange M for PS90

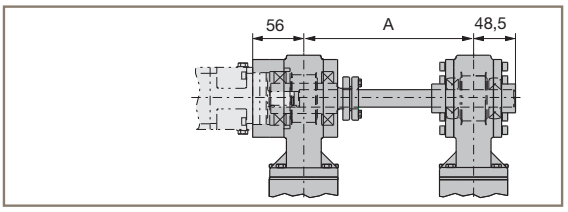

Center distance A between 120-350 mm

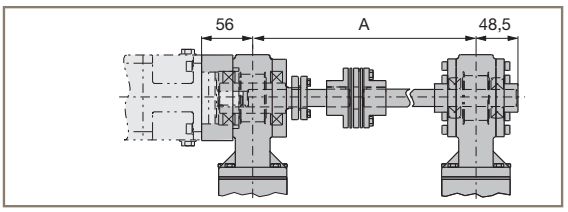

Center distance A between 350-600 mm

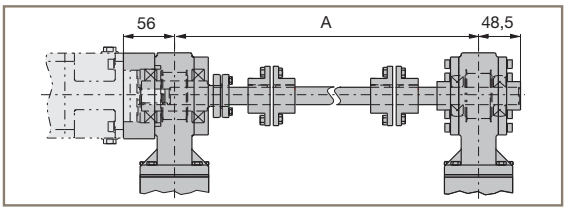

Center distance A larger than 600 mm

Tel: +45 63 12 83 00 | Email: ps@hymatik.com | www.hymatik.com | Hvidkaervej 27a, DK-5250 Odense SV, Denmark

HPLA120 (LBB120)

Drive option[1] → / ↓ Drive flange[1]	SL/SR/SB Housing with drive shaft for gearboxes or motors with hollow shaft	NL/NR Version with supported hollow shaft without drive - prepared for drive mounting	LR/RL Supported hollow shaft, B, C, M, P, Q, R Additional drive shaft
B (for drive shaft Ø22, max. 35 mm long)	not possible	Figure 9	Figure 3
C (for drive shaft Ø32, max. 60 mm long)		Figure 10/ Figure 23	Figure 4/ Figure 23
M (for PS90)		Figure 11	Figure 5
P (for PS115)		Figure 12/ Figure 24	Figure 6/ Figure 24
G (for drive shaft Ø24, max. 50 mm long)		Figure 15	non standard
H (for drive shaft Ø32, max. 58 mm long)		Figure 17	non standard
J (for drive shaft Ø24, max. 50 mm long)		Figure 16	non standard
Q (for PE4)		Figure 13	Figure 7
R (for PE5)		Figure 14	Figure 8
N (without flange)	Figure 1, Figure 2	-	-

1 Short designations from the order code on page 54

Drive housing with drive shaft/drive flange

Housing with drive shaft on one side: SL/SR

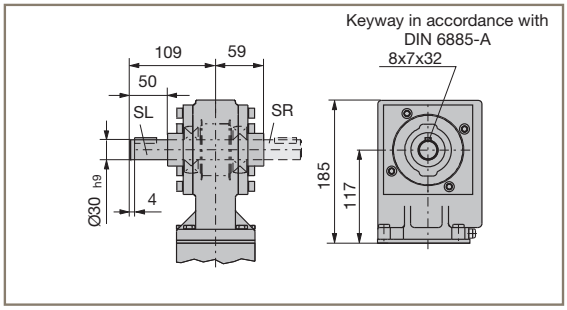

Figure 1

Housing with drive shaft on both sides: SB

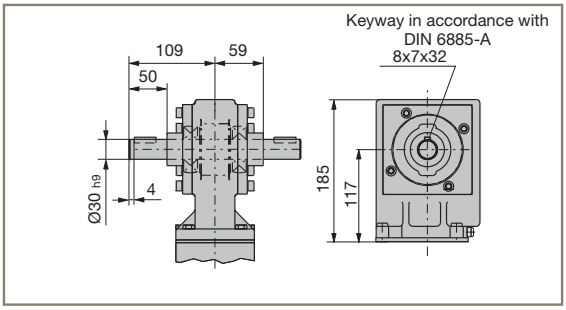

Figure 2

Drive option: LR/RL
Drive flange B

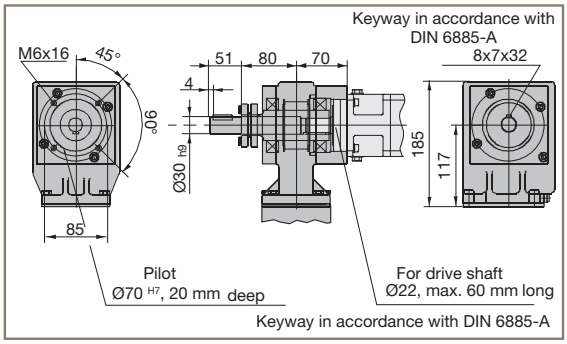

Figure 3

Drive option: LR/RL
Drive flange C

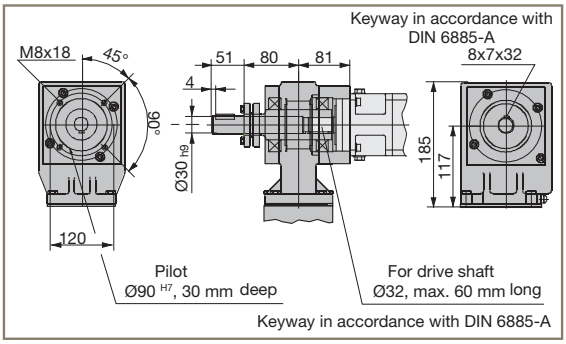

Figure 4

Tel: +45 63 12 83 00 | Email: ps@hymatik.com | www.hymatik.com | Hvidkaervej 27a, DK-5250 Odense SV, Denmark

Drive option: LR/RL
Drive flange M for PS90

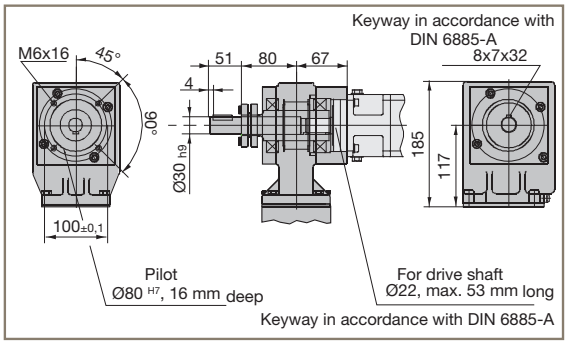

Figure 5

Drive option: LR/RL
Drive flange P for PS115

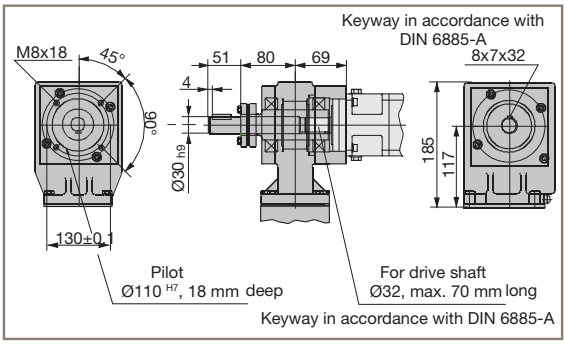

Figure 6

Drive option: LR/RL
Drive flange Q for PE4

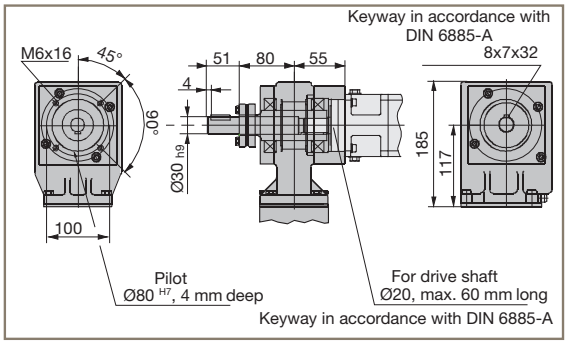

Figure 7

Drive option: LR/RL
Drive flange R for PE5

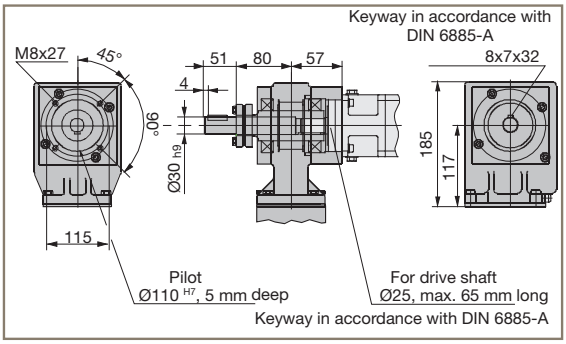

Figure 8

Single axis with hollow shaft or pulley directly on the shaft

Drive option: NL/NR
Drive flange B

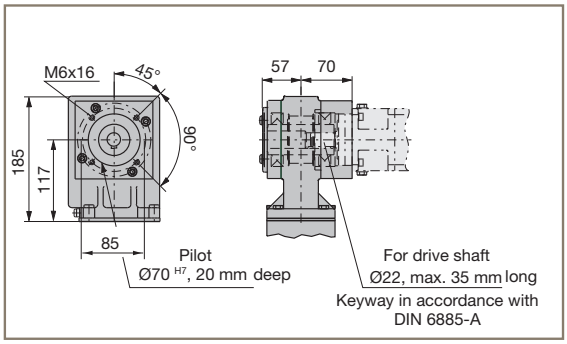

Figure 9

Drive option: NL/NR
Drive flange C

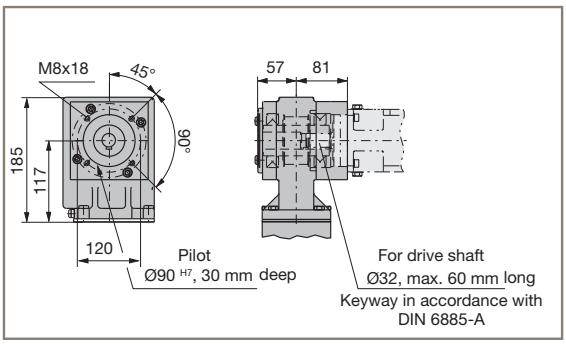

Figure 10

Tel: +45 63 12 83 00 | Email: ps@hymatik.com | www.hymatik.com | Hvidkaervej 27a, DK-5250 Odense SV, Denmark

Drive option: NL/NR
Drive flange M for PS90

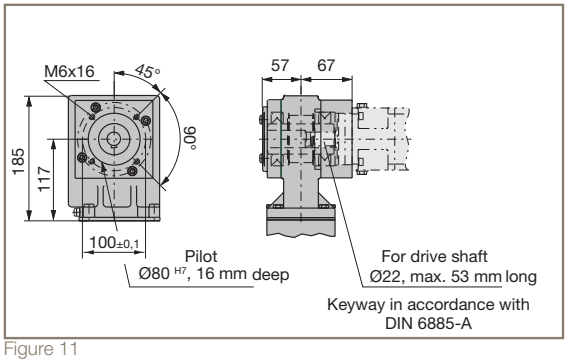

Figure 11

Drive option: NL/NR
Drive flange P for PS115

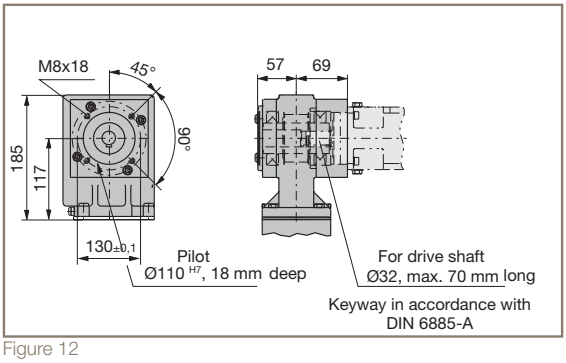

Figure 12

Drive option: NL/NR
Drive flange Q for PE4

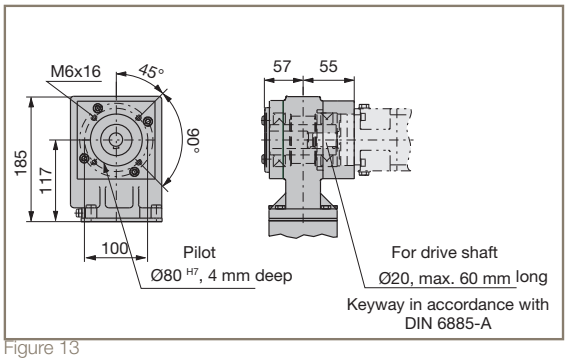

Figure 13

Drive option: NL/NR
Drive flange R for PE5

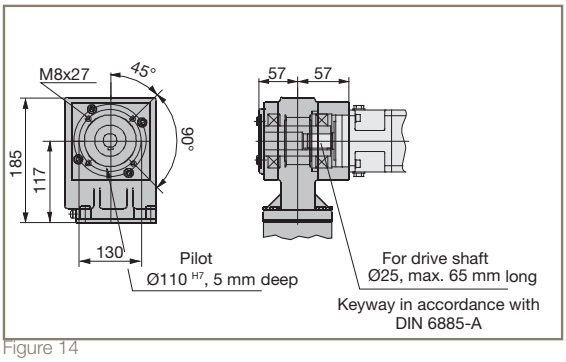

Figure 14

Drive option: NL/NR
Drive flange G

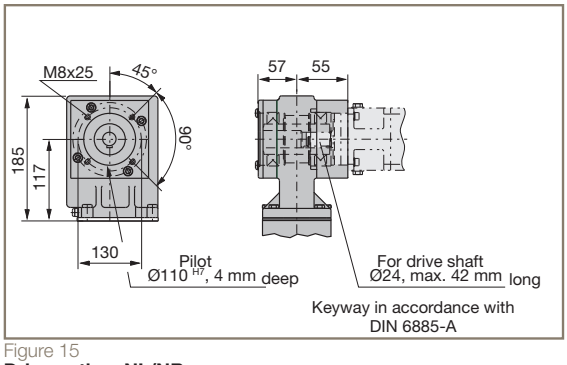

Figure 15

Drive option: NL/NR
Drive flange J

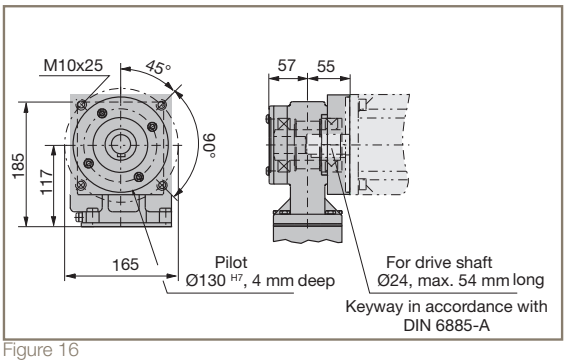

Figure 16

Drive option: NL/NR
Drive flange H

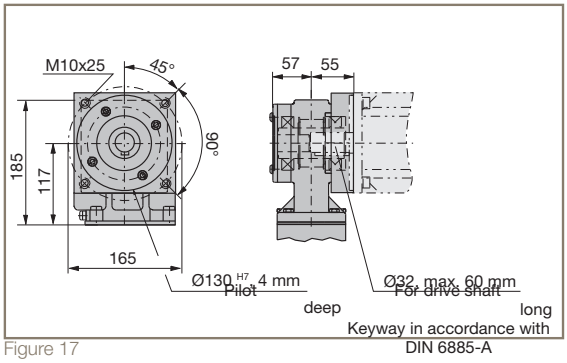

Figure 17

Tel: +45 63 12 83 00 | Email: ps@hymatik.com | www.hymatik.com | Hvidkaervej 27a, DK-5250 Odense SV, Denmark

Double axis

Drive option: NL/NR or LR/RL (double axis drive side)
Drive flange C

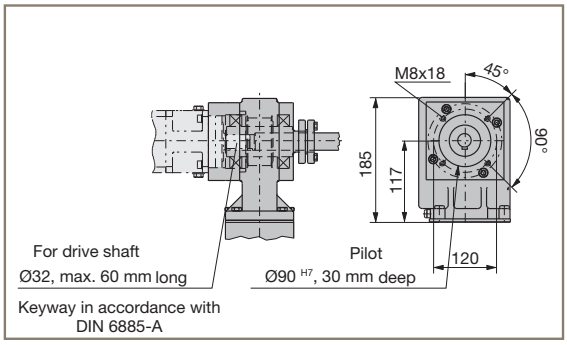

Figure 23

Drive option: NL/NR or LR/RL (double axis drive side)
Drive flange P for PS115

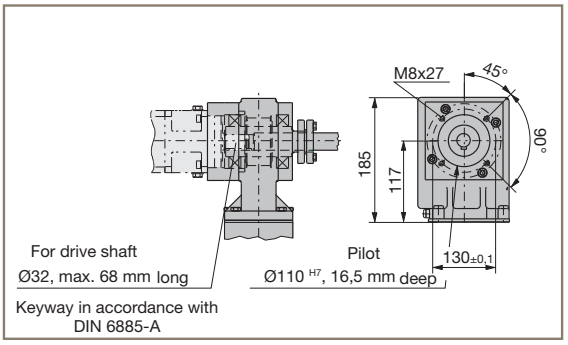

Figure 24

Center distance A:
Drive flange C

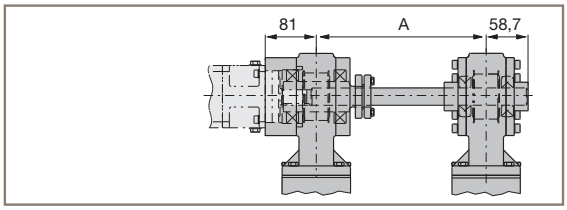

Center distance A between 150-350 mm

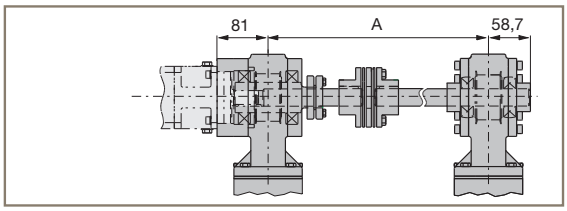

Center distance A between 350-600 mm

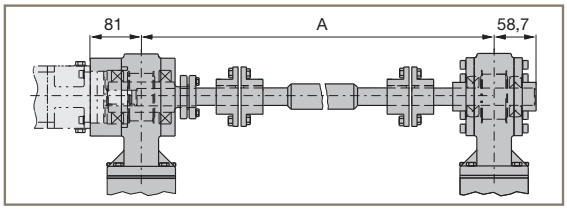

Center distance A larger than 600 mm

Center distance A:
Drive flange P for PS115

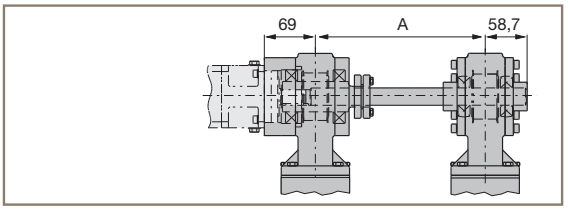

Center distance A between 150-350 mm

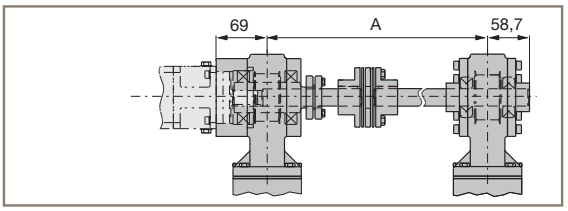

Center distance A between 350-600 mm

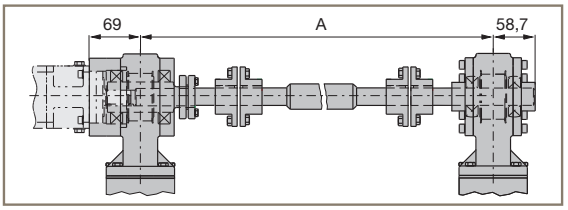

Center distance A larger than 600 mm

Tel: +45 63 12 83 00 | Email: ps@hymatik.com | www.hymatik.com | Hvidkaervej 27a, DK-5250 Odense SV, Denmark

HPLA180 (LBB180)

Drive option[1] → / ↓ Drive flange[1]	SL/SR/SB Housing with drive shaft for drives with hollow shaft	NL/NR Version with supported hollow shaft without drive - prepared for drive mounting	LR/RL Supported hollow shaft, C, D Additional drive shaft
C (for drive shaft Ø32, max. 58 mm long)	not possible	Figure 5	Figure 3
D (for drive shaft Ø40, max. 82 mm long)		Figure 6/ Figure 8	Figure 4/ Figure 8
N (without flange)	Figure 1, Figure 2	-	-

1 Short designations from the order code on page 54

Drive housing with drive shaft/drive flange

Housing with drive shaft on one side: SL/SR

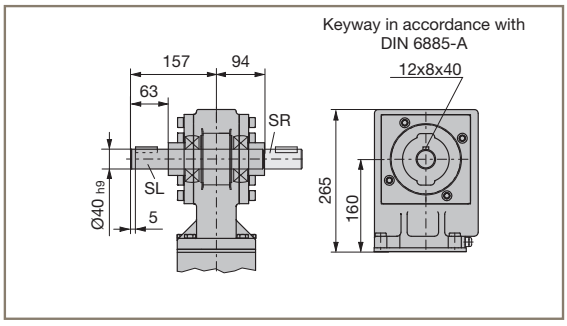

Figure 1

Housing with drive shaft on both sides: SB

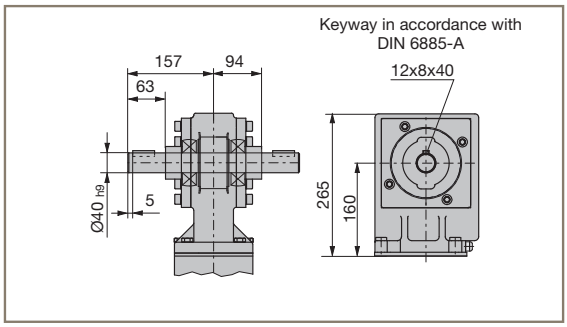

Figure 2

Drive option: LR/RL
Drive flange C

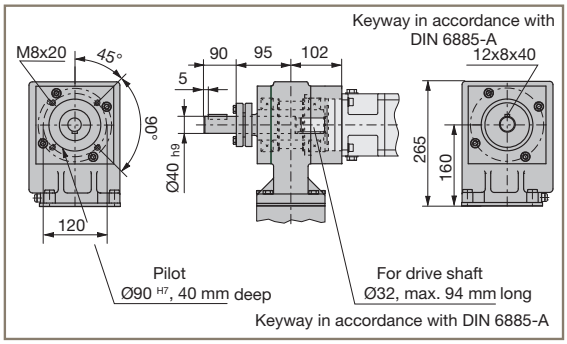

Figure 3

Drive option: LR/RL
Drive flange D

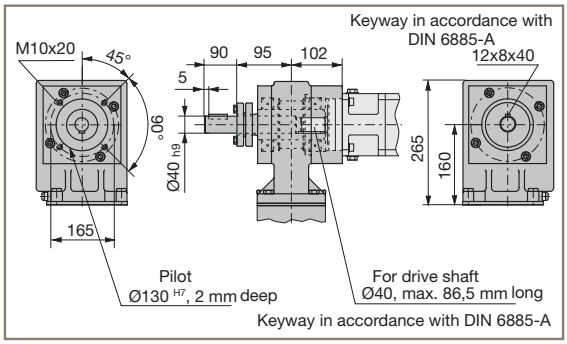

Figure 4

Tel: +45 63 12 83 00 | Email: ps@hymatik.com | www.hymatik.com | Hvidkaervej 27a, DK-5250 Odense SV, Denmark

Single axis with hollow shaft or pulley directly on the shaft

Drive option: NL/NR
Drive flange C

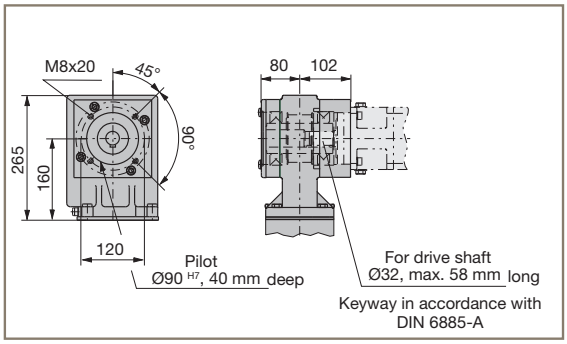

Figure 5

Drive option: NL/NR
Drive flange D

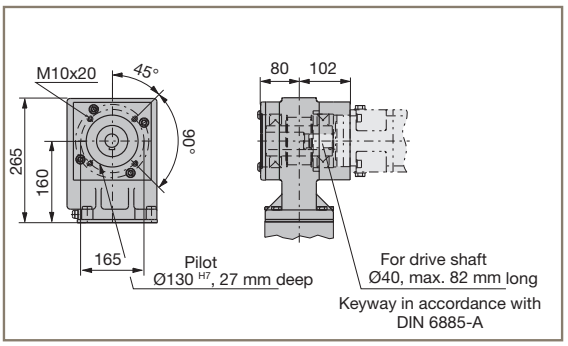

Figure 6

Double axis

Drive option: NL/NR or LR/RL (double axis drive side)
Drive flange D

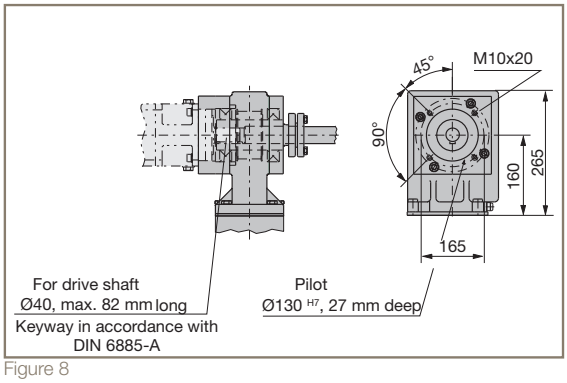

Figure 8

Center distance A:
Drive flange D

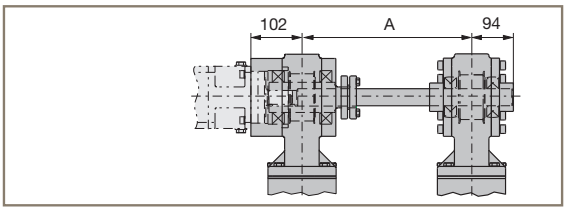

Center distance A between 180-350 mm

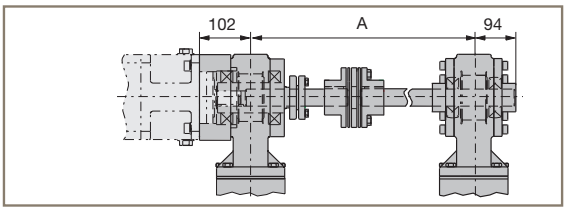

Center distance A between 350-600 mm

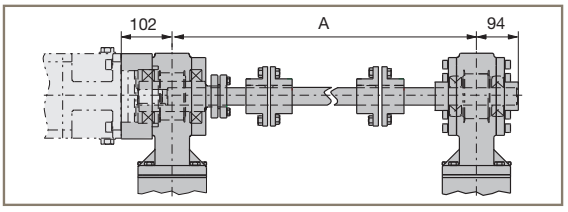

Center distance A larger than 600 mm

Tel: +45 63 12 83 00 | Email: ps@hymatik.com | www.hymatik.com | Hvidkaervej 27a, DK-5250 Odense SV, Denmark

Accessories

Dimensions [mm]
Schematic representations

Assembly Angle Plate

The assembly angle plate is used to connect a HPLA:

- to another linear actuator
- with a base (a Parker profile can be used as support)
- to other machine components

It is available in different sizes, isosceles or scalene - each with through holes. Each angle plate can be attached to the load attachment plate or to the corresponding profile in different directions.

Assembly angle plate isosceles

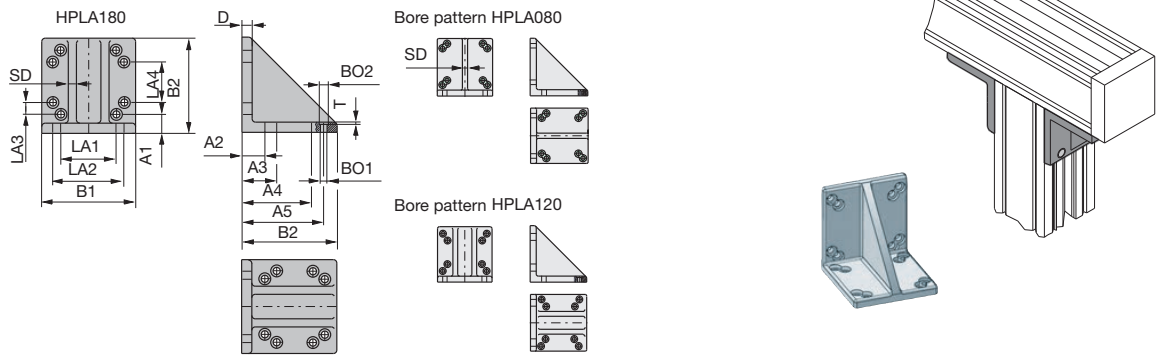

Frame size	A1	A2	A3	A4	A5	BO1	BO2	B1	B2	D	LA1	LA2	LA3	LA4	SD	T	Art. No.
HPLA080	16	16	22	64	70	Ø5.5	Ø10	74	77	8	48	60	6	42	7	3	500-000935
HPLA120	25	25	40	90	105	Ø9	Ø15	110	120	15	70	90	15	50	8	2	500-000945
HPLA180	35	60	80	140	160	Ø11	Ø22	180	180	20	110	140	20	85	12	1	500-000940

Assembly angle plate scalene

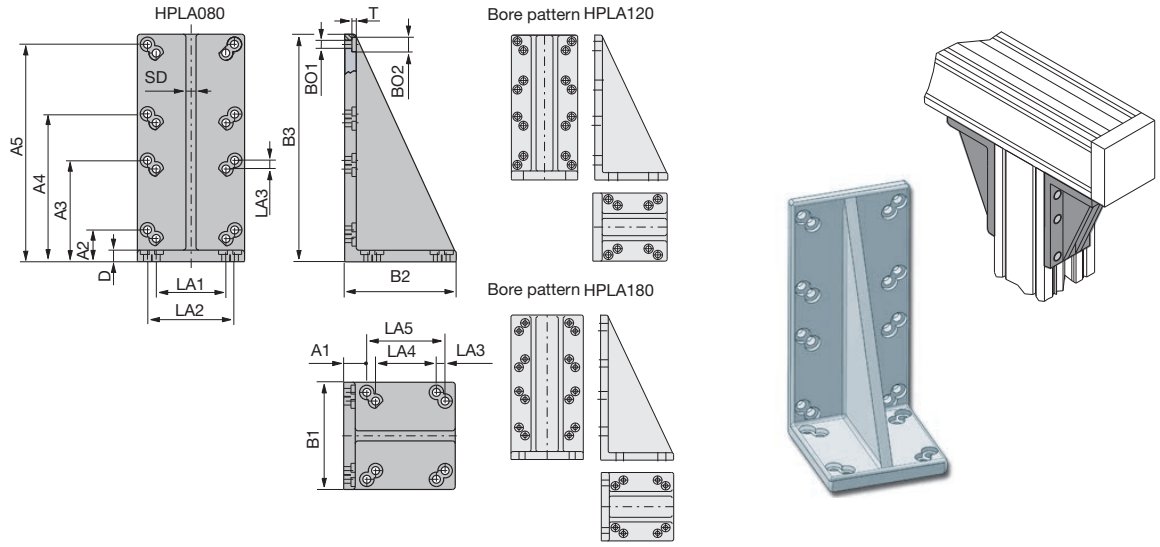

Frame size	A1	A2	A3	A4	A5	BO1	BO2	B1	B2	B3	D	LA1	LA2	LA3	LA4	LA5	SD	T	Art. No.
HPLA080	16	22	70	102	150	Ø5.5	Ø10	74	77	157	8	48	60	6	42	54	7	3	500-000936
HPLA120	25	40	105	165	230	Ø9	Ø15	110	120	240	15	70	90	15	50	80	8	2	500-000946
HPLA180	35	80	170	250	340	Ø11	Ø22	180	180	360	20	110	140	20	85	125	12	1	500-000941

Tel: +45 63 12 83 00 | Email: ps@hymatik.com | www.hymatik.com | Hvidkaervej 27a, DK-5250 Odense SV, Denmark

T-Nuts and Bolts

The T nuts and bolts can be used to attach other components in the T-slots of the profile, or on the upper side of the load attachment plate.

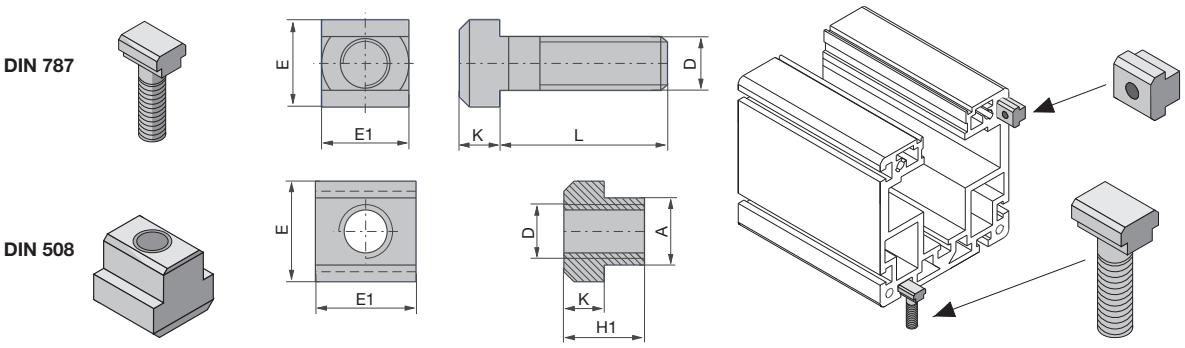

Frame size	Designation		A	D	E	E1	H1	K	L	Art. No.	(stainless)
HPLA080	T-slot bolt	DIN787 M6x15	--	M6	10	10	--	4	15	131-700030	(135-725430)
HPLA080	T-slot bolt	DIN787 M6x25	--	M6	10	10	--	4	25	131-700031	
HPLA080	T-slot bolt	DIN787 M6x30	--	M6	10	10	--	4	30	131-700032	
HPLA080	T-slot bolt	DIN787 M6x40	--	M6	10	10	--	4	40	131-700033	
HPLA120	T-slot bolt	DIN787 M10x25	--	M10	15	15	--	6	25	131-700007	(135-725459)
HPLA120	T-slot bolt	DIN787 M10x32	--	M10	15	15	--	6	32	131-700008	(135-725460)
HPLA120	T-slot bolt	DIN787 M10x40	--	M10	15	15	--	6	40	131-700009	(135-725465)
HPLA120	T-slot bolt	DIN787 M10x63	--	M10	15	15	--	6	63	131-700011	
HPLA120	T-slot bolt	DIN787 M10x80	--	M10	15	15	--	6	80	131-700012	
HPLA180	T-slot bolt	DIN787 M12x25	--	M12	18	18	--	7	25	131-700016	(135-725482)
HPLA180	T-slot bolt	DIN787 M12x50	--	M12	18	18	--	7	50	131-700015	(135-725480)
HPLA180	T-slot bolt	DIN787 M12x65	--	M12	18	18	--	7	65	131-700025	(135-725468)
HPLA180	T-slot bolt	DIN787 M12x80	--	M12	18	18	--	7	80	131-700026	(135-725470)
HPLA080	T-nut	DIN508 M4x6x10	5.6	M4	10	10	8	4	--	131-700101	(135-725391)
HPLA080	T-nut	DIN508 M5x6x10	5.6	M5	10	10	8	4	--	131-700102	(135-725390)
HPLA080	T-nut long	HWN313 ZN M5x6	5.6	M5	10	20	8	4	--	131-700147	
HPLA080	T-nut	HWN314 ZN M5x6	Rhombus form for retro-fitting							131-700157	
HPLA120	T-nut	DIN508 M4x10x15	9.6	M4	15	15	12	6	--	131-700134	(135-725403)
HPLA120	T-nut	DIN508 M6x10x15	9.6	M6	15	15	12	6	--	131-700135	
HPLA120	T-nut	DIN508 M8x10x15	9.6	M8	15	15	12	6	--	131-700104	(135-725402)
HPLA120	T-nut long	HWN313 M8x10x30	9.6	M8	15	30	12	6	--	131-700141	(135-725406)
HPLA120	T-nut	HWN314 M8x10	Rhombus form for retro-fitting							131-700155	
HPLA180	T-nut	DIN508 M4x12x18	11.6	M4	18	18	14	7	--	131-700113	(135-725422)
HPLA180	T-nut	DIN508 M6x12x18	11.6	M6	18	18	14	7	--	131-700112	(135-725421)
HPLA180	T-nut long	HWN313M10x12x35	11.6	M10	18	35	14	7	--	131-700111	(135-725420)
HPLA180	T-nut	HWN314 M10x12	Rhombus form for retro-fitting							131-700156	

* When using the combination of two linear actuators via toe clamps, we would recommend the use of long nuts.

Tel: +45 63 12 83 00 | Email: ps@hymatik.com | www.hymatik.com | Hvidkaervej 27a, DK-5250 Odense SV, Denmark

Toe Clamp

The toe clamps are used in conjunction with the standard load attachment plate to rapidly install and attach various combinations of linear actuators. Two clamping profiles are needed to fix a HLE/HLEZ/HPLA on a flange plate. The following table shows the required profiles for the different axis combinations:

top / bottom	LB..080 (HPLA80)	LE..100 (HLE100)	LB..120 (HPLA120)	LE..150 (HLE150)	LB..180 (HPLA180)
LB..080	Art. No. 500-000931	--	--	--	--
LE..100	Art. No. 500-000932	Art. No. 500-000905	--	--	--
LB..120	Art. No. 500-000930	Art. No. 500-000908	Art. No. 500-000925	--	--
LE..150	--	Art. No. 500-000903	Art. No. 500-900909	Art. No. 500-000902	--
LB..180	--	--	Art. No. 500-000922	Art. No. 500-000921	Art. No. 500-000920

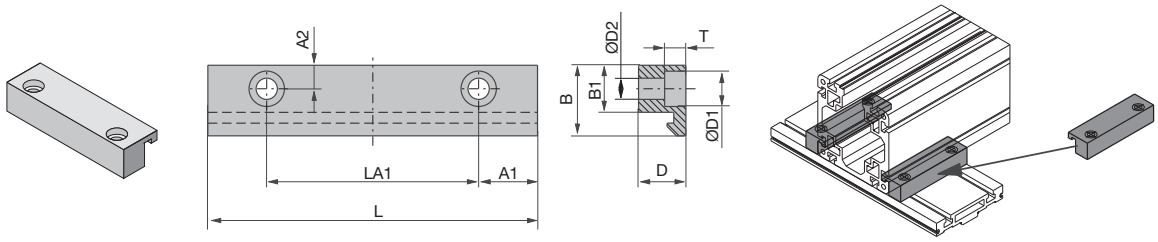

Art. No.	A1	A2	B	B1	D	D1	D2	L	LA1	T
500-000902	25	12	40	25	30	15	9	140	90 ±0.2	9
500-000903	25	10	30	20	20	15	9	140	90 ±0.2	9
500-000905	15	10	30	20	20	11	6.6	90	60 ±0.2	7
500-000908	20	10	30	20	20	15	9	110	70 ±0.2	9
500-000909	25	12.5	37.5	25	26	15	9	140	90 ±0.2	9
500-000920	30	15	45	30	36	18	11	170	110 ±0.2	11
500-000921	30	12	40	25	30	18	11	170	110 ±0.2	11
500-000922	25	12.5	37.5	25	26	18	11	160	110 ±0.2	10.6
500-000925	20	12.5	37.5	25	26	15	9	110	70 ±0.2	9
500-000930	20	10	27	20	17	15	9	110	70 ±0.2	9
500-000931	14	10	27	20	17	10	5.5	76	48 ±0.2	5.7
500-000932	15	10	27	20	17	15	9	90	60 ±0.2	9

Tel: +45 63 12 83 00 | Email: ps@hymatik.com | www.hymatik.com | Hvidkaervej 27a, DK-5250 Odense SV, Denmark

External Stop Buffer

The external stop buffer is mounted in the grooves of the HPLA profile and can be adjusted infinitely.

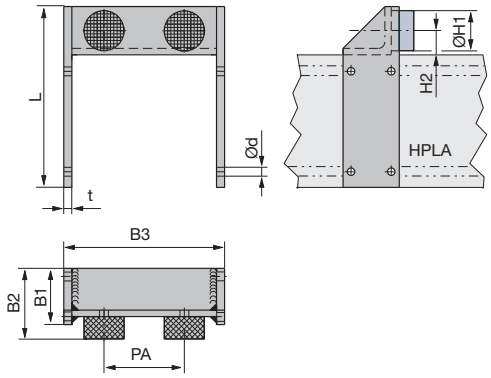

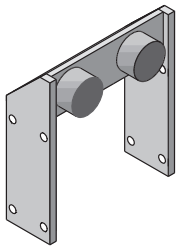

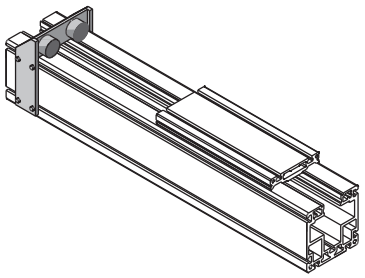

Frame size	B1	B2	B3	PA	d	L	t	ØH1	H2	Art. No. (including mounting material)
HPLA080	30	45	90	56	5.5	91	5	15	11	510-006497
HPLA120	50	60	140	74	9	150	10	30	17	510-007497
HPLA180	70	88	200	100	11	225	10	50	30	510-008497

Longitudinal Flanges

The usable stroke can be more than doubled when using the flange plates. A longitudinal flange is required if the travel path exceeds the profile length (see: "Technical Data", page 14). The separation of the profiles is made, if possible and not stated otherwise, in the middle. The cut-off point of the longitudinal flanges should always be located near a fixation point. The support distance should be between 1.0 m and 1.5 m For a HPLA with toothed belt drive and longitudinal flanges, the load characteristics must be derated if the maximum travel is exceeded, (see "Technical data", page 14) and it should only be used with the profile opening at the top or at the bottom. With a steel roller guiding, max. one longitudinal flange is permitted!

	Unit	HPLA080	HPLA120	HPLA180
maximum permissible load	[N]	0.5 x Fx*1	0.5 x Fx*1	0.5 x Fx*1
Speed	[m/s]	< 1	< 1	< 1
Acceleration	[m/s²]	< 1	< 1	< 1
Repeatability	[mm]	> ±0.5	> ±0.5	> ±0.5

*1 Fx: (See chapter "Transmissible Forces and Torques" page 16

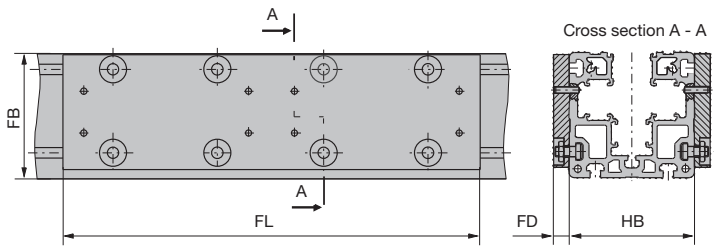

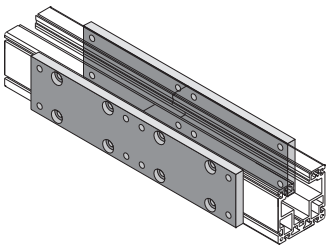

Frame size	FL	FB	FD	HB
HPLA080	300	70	15	80
HPLA120	400	110	15	120
HPLA180	500	165	20	180

Tel: +45 63 12 83 00 | Email: ps@hymatik.com | www.hymatik.com | Hvidkaervej 27a, DK-5250 Odense SV, Denmark

Intermediate Shaft Bearing for Double Axes

The intermediate shaft bearing is used to support the connection shaft of a double axis in the event of a long axis distance. The intermediate shaft bearing must be used if the critical rotational speed is exceeded with the double actuator connection shaft: (see diagram)

Critical rotational speed

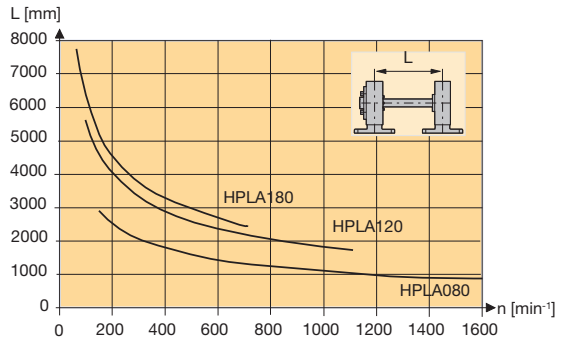

Ratio of rotational speed and speed

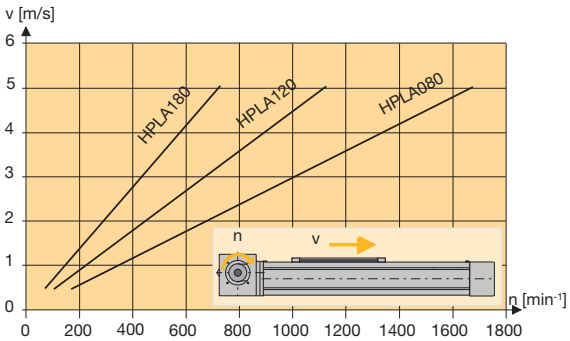

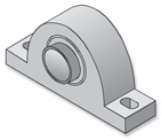

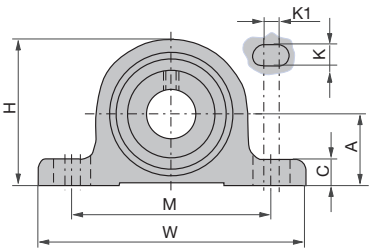

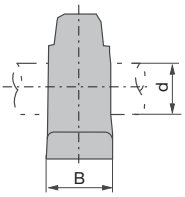

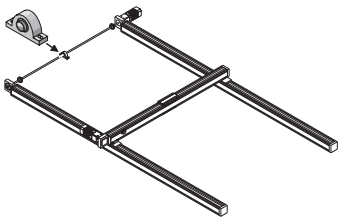

Frame size	Type	A	B	C	d	H	K	K1	M	W	Art. No.
HPLA080	PASE20	33.3	32	14.5	Ø20	64	11	8	97	130	416-000120
HPLA120	PASE40	49.2	48	19	Ø40	99	14	12	138	179	416-000200
HPLA180	PASE50	57.2	54	21.5	Ø50	115	18	5	158	200	416-000210

Tel: +45 63 12 83 00 | Email: ps@hymatik.com | www.hymatik.com | Hvidkaervej 27a, DK-5250 Odense SV, Denmark

Position Switch

As a standard, tripping plate, switches and distribution box are mounted on the motor side. Mounting configuration 5 is used as a standard.
The positions of the limit switches and of the machine zero must be set by the customer according to the application requirements.

The end limits should, for instance, be set so that they are activated before the beginning of the safety travel (distance for braking the moved mass see page 20). The tripping plate is enclosed separately into the delivery for the carriage configuration with bar (T/F) (the same applies to the initiator and the limit switches for mounting configuration 3).
Tripping plate, initiators and distribution box are described in this chapter.

Mounting configurations of the position switch

Mounting configuration 2: 3 external electrical initiators

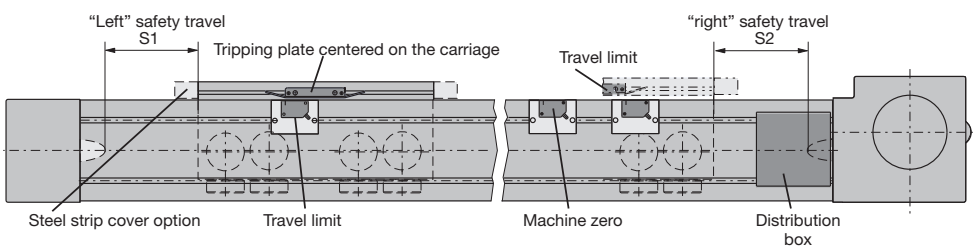

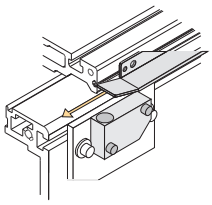

Mounting configuration 5 (standard): 1 electrical initiator

The electrical initiator defines the machine zero. The end limits are software end limits in the Compax3 servo drive.

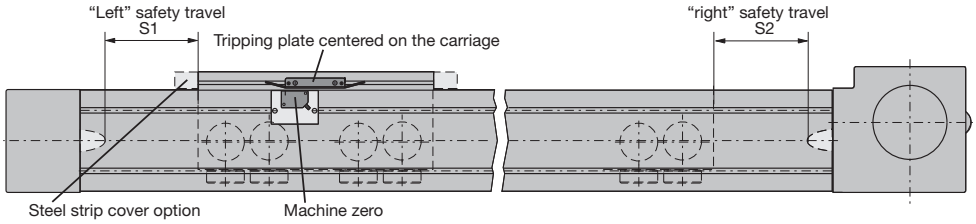

Tripping plate

The tripping plate is suitable for all standard load attachment plates. It is fixed to the load attachment plate with the aid of cylinder head screws and square nuts.

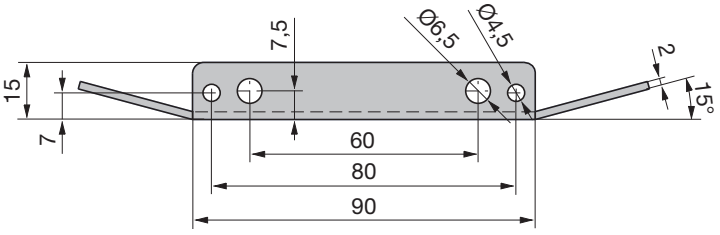

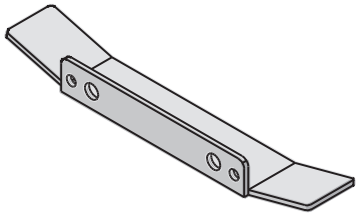

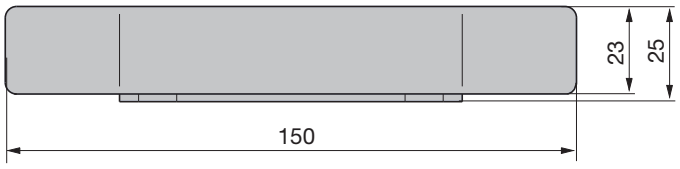

Art. No. Tripping plate: 500-000531
Art. No. Square nut (2 pcs. required): 135-700001
Art. No. Cylinder head screw M4x6 (2 pcs. required): 130-302294

Tel: +45 63 12 83 00 | Email: ps@hymatik.com | www.hymatik.com | Hvidkaervej 27a, DK-5250 Odense SV, Denmark

Electrical initiator

The initiators are activated by a tripping plate on the side on the flange plate.

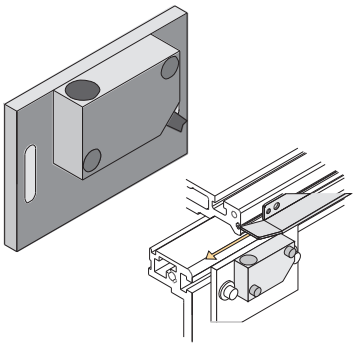

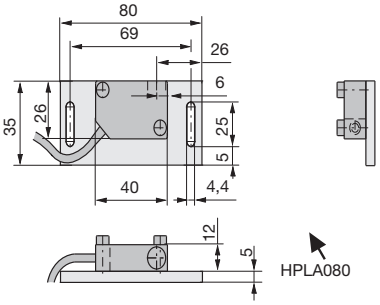

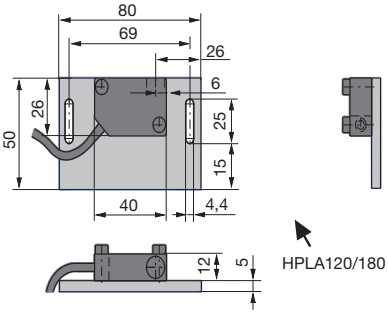

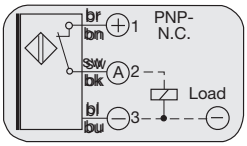

Frame size	Designation	Art. No.	
		Standard design	Stainless version
HPLA080	Electrical limit switch NPN normally closed contact with 6 m cable and fixing material	510-900702	on request
HPLA080	Electrical limit switch NPN normally open contact with 6 m cable and fixing material	510-900700	on request
HPLA080	Electrical limit switch PNP normally closed contact with 6 m cable and fixing material	510-900701	on request
HPLA080	Electrical limit switch PNP normally open contact with 6 m cable and fixing material	510-900703	on request
HPLA080	PNP normally closed contact, pluggable	510-900704	on request
HPLA120	Electrical limit switch NPN normally closed contact with 6 m cable and fixing material	510-900527	510-900622
HPLA120	Electrical limit switch NPN normally open contact with 6 m cable and fixing material	510-900525	510-900620
HPLA120	Electrical limit switch PNP normally closed contact with 6 m cable and fixing material	510-900602	510-900621
HPLA120	Electrical limit switch PNP normally open contact with 6 m cable and fixing material	510-900528	510-900623
HPLA120	PNP normally closed contact, pluggable	510-900603	on request
HPLA180	Electrical limit switch NPN normally closed contact with 6 m cable and fixing material	510-900652	on request
HPLA180	Electrical limit switch NPN normally open contact with 6 m cable and fixing material	510-900653	on request
HPLA180	Electrical limit switch PNP normally closed contact with 6 m cable and fixing material	510-900650	on request
HPLA180	Electrical limit switch PNP normally open contact with 6 m cable and fixing material	510-900651	on request
HPLA180	PNP normally closed contact, pluggable	510-900654	on request

Tel: +45 63 12 83 00 | Email: ps@hymatik.com | www.hymatik.com | Hvidkaervej 27a, DK-5250 Odense SV, Denmark

Other Accessories

Belt tension measuring device RSM:
For accurately setting the toothed belt tension. (Art. No.: 037-000201)



Tel: +45 63 12 83 00 | Email: ps@hymatik.com | www.hymatik.com | Hvidkaervej 27a, DK-5250 Odense SV, Denmark

Order Code

HPLA Series Order Code | L | B | | | | | | | | | | | | | | | | | | | | | | | | | | |

| | | | | | | | | | | | | | | | | | | |

Drive Options

The drive mounting side left (L) or right (R) is defined looking from the tensioning station to the drive station.

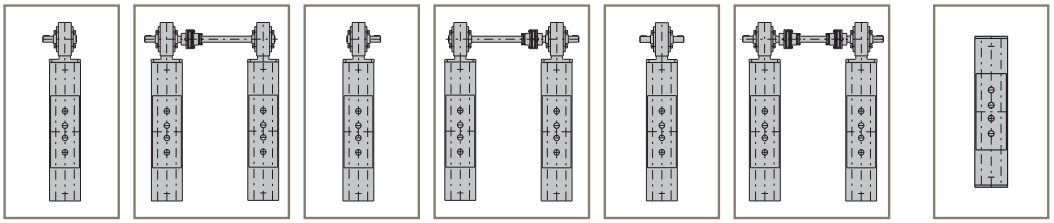

SL Single axis | **SL** Double axis | **SR** Single axis | **SR** Double axis | **SB** Single axis | **SB** Double axis | **NN** Idler

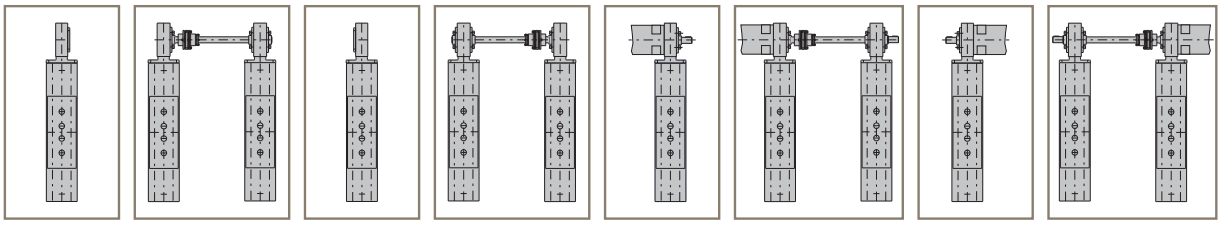

NL Single axis | **NL** Double axis | **NR** Single axis | **NR** Double axis | **LR** Single axis | **LR** Double axis (On request) | **RL** Single axis | **RL** Double axis (on request)

Additional Information available on:

www.parker.com/eme/hpla

Tel: +45 63 12 83 00 | Email: ps@hymatik.com | www.hymatik.com | Hvidkaervej 27a, DK-5250 Odense SV, Denmark

Parker Worldwide

Europe, Middle East, Africa

AE – United Arab Emirates, Dubai
Tel: +971 4 8127100
parker.me@parker.com

AT – Austria, St. Florian
Tel: +43 (0)7224 66201
parker.austria@parker.com

AZ – Azerbaijan, Baku
Tel: +994 50 2233 458
parker.azerbaijan@parker.com

BE/NL/LU – Benelux,
Hendrik Ido Ambacht
Tel: +31 (0)541 585 000
parker.nl@parker.com

BG – Bulgaria, Sofia
Tel: +359 2 980 1344
parker.bulgaria@parker.com

BY – Belarus, Minsk
Tel: +48 (0)22 573 24 00
parker.poland@parker.com

CH – Switzerland, Etoy
Tel: +41 (0)21 821 87 00
parker.switzerland@parker.com

CZ – Czech Republic, Klecany
Tel: +420 284 083 111
parker.czechrepublic@parker.com

DE – Germany, Kaarst
Tel: +49 (0)2131 4016 0
parker.germany@parker.com

DK – Denmark, Ballerup
Tel: +45 43 56 04 00
parker.denmark@parker.com

ES – Spain, Madrid
Tel: +34 902 330 001
parker.spain@parker.com

FI – Finland, Vantaa
Tel: +358 (0)20 753 2500
parker.finland@parker.com

FR – France, Contamine s/Arve
Tel: +33 (0)4 50 25 80 25
parker.france@parker.com

GR – Greece, Piraeus
Tel: +30 210 933 6450
parker.greece@parker.com

HU – Hungary, Budaörs
Tel: +36 23 885 470
parker.hungary@parker.com

IE – Ireland, Dublin
Tel: +353 (0)1 466 6370
parker.ireland@parker.com

IL – Israel
Tel: +39 02 45 19 21
parker.israel@parker.com

IT – Italy, Corsico (MI)
Tel: +39 02 45 19 21
parker.italy@parker.com

KZ – Kazakhstan, Almaty
Tel: +7 7273 561 000
parker.easteurope@parker.com

NO – Norway, Asker
Tel: +47 66 75 34 00
parker.norway@parker.com

PL – Poland, Warsaw
Tel: +48 (0)22 573 24 00
parker.poland@parker.com

PT – Portugal
Tel: +351 22 999 7360
parker.portugal@parker.com

RO – Romania, Bucharest
Tel: +40 21 252 1382
parker.romania@parker.com

RU – Russia, Moscow
Tel: +7 495 645-2156
parker.russia@parker.com

SE – Sweden, Borås
Tel: +46 (0)8 59 79 50 00
parker.sweden@parker.com

SK – Slovakia, Banská Bystrica
Tel: +421 484 162 252
parker.slovakia@parker.com

SL – Slovenia, Novo Mesto
Tel: +386 7 337 6650
parker.slovenia@parker.com

TR – Turkey, Istanbul
Tel: +90 216 4997081
parker.turkey@parker.com

UA – Ukraine, Kiev
Tel: +48 (0)22 573 24 00
parker.poland@parker.com

UK – United Kingdom, Warwick
Tel: +44 (0)1926 317 878
parker.uk@parker.com

ZA – South Africa, Kempton Park
Tel: +27 (0)11 961 0700
parker.southafrica@parker.com

North America

CA – Canada, Milton, Ontario
Tel: +1 905 693 3000

US – USA, Cleveland
Tel: +1 216 896 3000

Asia Pacific

AU – Australia, Castle Hill
Tel: +61 (0)2-9634 7777

CN – China, Shanghai
Tel: +86 21 2899 5000

HK – Hong Kong
Tel: +852 2428 8008

IN – India, Mumbai
Tel: +91 22 6513 7081-85

JP – Japan, Tokyo
Tel: +81 (0)3 6408 3901

KR – South Korea, Seoul
Tel: +82 2 559 0400

MY – Malaysia, Shah Alam
Tel: +60 3 7849 0800

NZ – New Zealand, Mt Wellington
Tel: +64 9 574 1744

SG – Singapore
Tel: +65 6887 6300

TH – Thailand, Bangkok
Tel: +662 186 7000

TW – Taiwan, Taipei
Tel: +886 2 2298 8987

South America

AR – Argentina, Buenos Aires
Tel: +54 3327 44 4129

BR – Brazil, Sao Jose dos Campos
Tel: +55 800 727 5374

CL – Chile, Santiago
Tel: +56 2 623 1216

MX – Mexico, Toluca
Tel: +52 72 2275 4200

© 2021 Parker Hannifin Corporation. All rights reserved.

192-580011N11 06/2021

EMEA Product Information Centre
Free phone: 00 800 27 27 5374
(from AT, BE, CH, CZ, DE, DK, EE, ES, FI, FR, IE, IL, IS, IT, LU, MT, NL, NO, PL, PT, RU, SE, SK, UK, ZA)

US Product Information Centre
Toll-free number: 1-800-27 27 537

www.parker.com

Your local authorized Parker distributor