

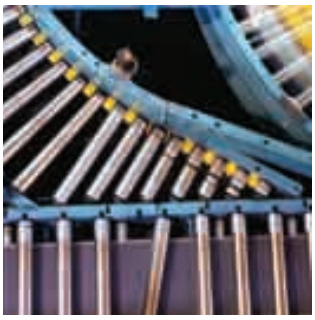

aerospace
climate control
electromechanical
filtration
fluid & gas handling
hydraulics
pneumatics
process control
sealing & shielding





Thrust Cylinders

Series C0D and C0P



Parker

ENGINEERING YOUR SUCCESS.

Features	Air cylinder	Hydraulic cylinder	Electro mechanical actuators
Overload safe	***	***	*
Easy to limit force	***	***	*
Easy to vary speed	***	***	*
Speed	***	**	**
Reliability	***	***	***
Robustness	***	***	*
Installation cost	***	*	**
Ease of service	***	**	*
Safety in damp environments	***	***	*
Safety in explosive atmospheres	***	***	*
Safety risk with electrical installations	***	***	*
Risk of oil leak	***	*	***
Clean, hygienic	***	**	*
Standardised measurements	***	***	*
Service life	***	***	*
Hydraulic system required	***	*	***
Weight	***	**	**
Purchase price	***	**	*
Power density	**	***	*
Noise level during operation	**	***	**
High force for size	**	***	*
Positioning possibilities	*	***	***
Total energy consumption	*	**	***
Service interval	*	**	***
Compressor capacity required	*	***	***

* = good, **=average, ***=excellent

Important
Before attempting any external or internal work on the cylinder or any connected components, make sure the cylinder is vented and disconnect the air supply in order to ensure isolation of the air supply.

Note
All technical data in this catalogue are typical data only.
Air quality is essential for maximum cylinder service life (see ISO 8573).

WARNING

FAILURE OR IMPROPER SELECTION OR IMPROPER USE OF THE PRODUCTS AND/OR SYSTEMS DESCRIBED HEREIN OR RELATED ITEMS CAN CAUSE DEATH, PERSONAL INJURY AND PROPERTY DAMAGE.
This document and other information from Parker Hannifin Corporation, its subsidiaries and authorized distributors provide product and/or system options for further investigation by users having technical expertise. It is important that you analyze all aspects of your application and review the information concerning the product or system in the current product catalog. Due to the variety of operating conditions and applications for these products or systems, the user, through its own analysis and testing, is solely responsible for making the final selection of the products and systems and assuring that all performance, safety and warning requirements of the application are met. The products described herein, including without limitation, product features, specifications, designs, availability and pricing, are subject to change by Parker Hannifin Corporation and its subsidiaries at any time without notice.

SALE CONDITIONS
The items described in this document are available for sale by Parker Hannifin Corporation, its subsidiaries or its authorized distributors. Any sale contract entered into by Parker will be governed by the provisions stated in Parker's standard terms and conditions of sale (copy available upon request).

Contents **Page**

COD and COP Thrust cylinders 4
Main data 5
Material specification 5
Working medium, air quality 5
Order key, Diaphragm type 6
Order key, Piston type 6
Ordering data for C0D and C0P thrust cylinders 7
Dimensions: piston and diaphragm type 8
Neck mounting nut and piston rod nut 9
Seal kits and grease for C0D and C0P 9
Press stand for thrust cylinders 10
Dimensions, press stand 11

Tel: +45 63 12 83 00 | Email: ps@hymatik.com | www.hymatik.com | Hvidkaervej 27a, DK-5250 Odense SV, Denmark

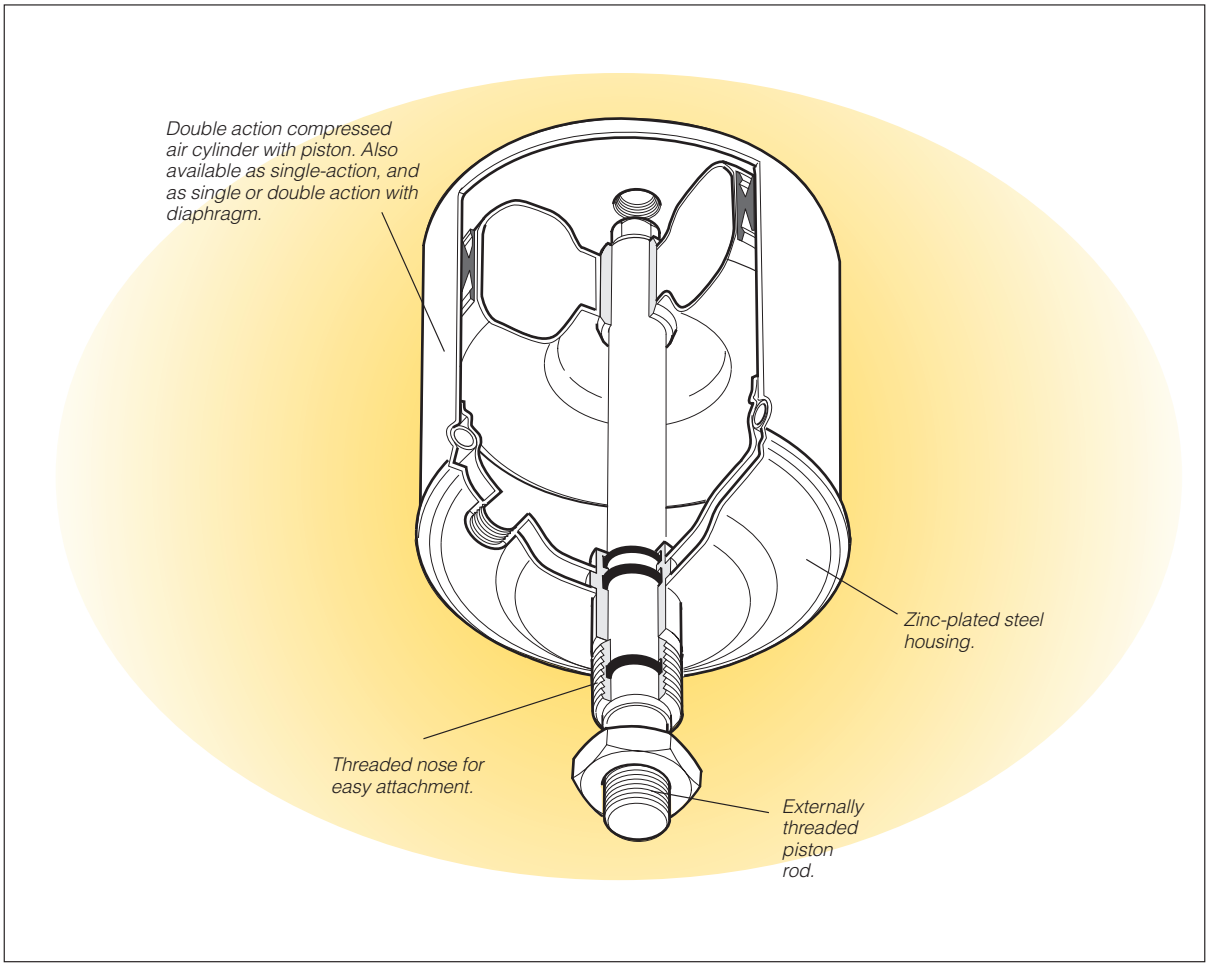

COD and COP

Thrust cylinders

The thrust cylinders are linear actuators, designed for a high force to size ratio. This makes the cylinder ideal to use for clamping, riveting, punching and similar applications where a high force is required.

The range includes 14 different versions, providing forces from 1600 to 25 000 N (at 6 bar), single- as well as double-acting and in piston or diaphragm design.

The single-acting version has a built in powerful spring for the return stroke, but for applications where a high force is required in both directions there is the double-acting version.

The cylinder body is an all zinc plated sheet of steel and the piston rod, which is guided in two maintenance free bearings, is provided with flats and a male thread.

To facilitate the installation, the guiding sleeve is provided with a thread which can be used either for direct mounting in a threaded hole or for installation in a free running hole using a lock nut.

Tel: +45 63 12 83 00 | Email: ps@hymatik.com | www.hymatik.com | Hvidkaervej 27a, DK-5250 Odense SV, Denmark

C0D and C0P — Thrust cylinders

Main data

Thrust cylinder	Force [1] at 600 kPa (6 bar) N	Stroke [2] mm	Spring force Max N	Spring force Min N	Weight Kgs	Displacement [3] plus dm^3	Displacement [3] minus dm^3	Port thread
Double acting								
C0D300-40	3000	40	-	-	2,6	0,50	0,42	G1/4
C0D600-50	6000	50	-	-	5,4	1,05	0,92	G1/4
C0D1200-50	12000	50	-	-	11,4	1,96	1,90	G1/2
C0P2500-60	25000	60	-	-	21,4	3,50	3,40	G1/2
C0P2500-80	25000	80	-	-	21,6	4,40	4,30	G1/2
Single acting								
C0P160-50S	1600	50	314	128	1,0	0,12	-	G1/4
C0P160-80S	1600	80	314	128	1,0	0,20	-	G1/4
C0P300-50S	3000	50	314	128	1,5	0,30	-	G1/4
C0P300-80S	3000	80	314	128	1,5	0,50	-	G1/4
C0D300-40S	3000	40	294	98	2,8	0,50	-	G1/4
C0D600-50S	6000	50	638	98	5,6	1,05	-	G1/4
C0D1200-50S	12000	50	981	235	12,2	1,96	-	G1/2
C0P2500-60S	25000	60	2700	883	22,0	3,50	-	G1/2
C0P2500-100S	25000	100	2700	883	22,2	5,40	-	G1/2

1) In the case of single-acting thrust cylinders, spring force must be considered in calculation of performance.
2) Tolerance ±3 mm (C0P2500 +6/-1)
3) The displacement relates to plus and minus chambers and includes dead volume.

Additional data

Working pressure	Max 8 bar
Working temperature	-20 °C to +70 °C

Prelubricated, further lubrication is not normally necessary.
If additional lubrication is introduced it has to be continued.

Material specification

Cylinder housing	Zinc plated steel
Piston	Steel
Piston rod	Steel
Piston rod nut	Steel
Diaphragm, COD	Textile reinforced nitrile rubber, NBR
Seals	Nitrile rubber, NBR
Piston rod bearings	Lubricant filled thermoplastic
Return spring	Spring steel

Working medium, air quality

Working medium	Dry, filtered compressed air to ISO 8573-1 class 3.4.3.

Recommended air quality for cylinders

For best possible service life and trouble-free operation, ISO 8573-1 quality class 3.4.3 should be used. This means 5 µm filter (standard filter) dew point +3 °C for indoor operation (a lower dew point should be selected for outdoor operation) and oil concentration 1.0 mg oil/m^3, which is what a standard compressor with a standard filter gives.

ISO 8573-1 quality classes

Quality class	Pollution particle size (µm)	Pollution max con-centration (mg/m^3)	Water max. press. dew point (°C)	Oil max con-centration (mg/m^3)
1	0,1	0,1	-70	0,01
2	1	1	-40	0,1
3	5	5	-20	1,0
4	15	8	+3	5,0
5	40	10	+7	25
6	-	-	+10	-

NOTE!
Compressed air cylinders, types C0P and C0D should not be used in vertical applications without an external stop.

Tel: +45 63 12 83 00 | Email: ps@hymatik.com | www.hymatik.com | Hvidkaervej 27a, DK-5250 Odense SV, Denmark

Order key, Diaphragm type

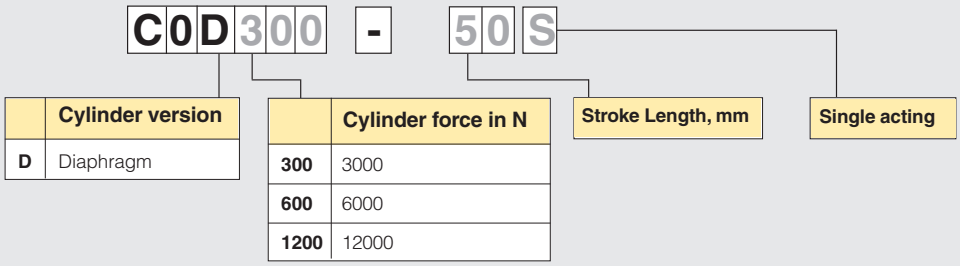

	Cylinder version
D	Diaphragm

	Cylinder force in N
300	3000
600	6000
1200	12000

Stroke Length, mm

Single acting

Order key, Piston type

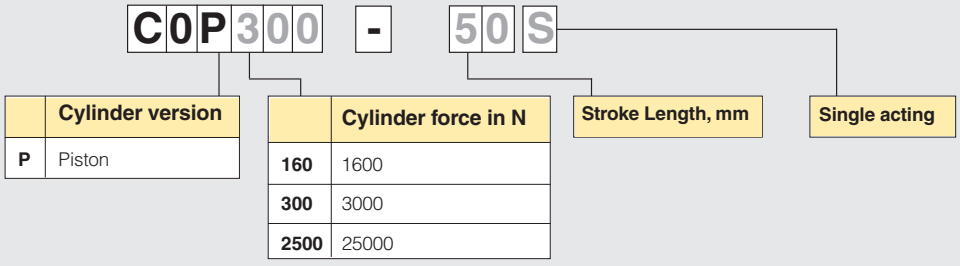

	Cylinder version
P	Piston

	Cylinder force in N
160	1600
300	3000
2500	25000

Stroke Length, mm

Single acting



C0D C0P

Main data for C0D and C0P thrust cylinders

Symbol	Force at 6 bar N	Conn.	Stroke mm	Weight Kg	Order code
Double acting 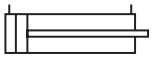	3000	G1/4	40	2,7	**C0D300-40**
	6000	G1/4	50	5,7	**C0D600-50**
	12000	G1/2	50	11,5	**C0D1200-50**
	25000	G1/2	60	21,4	**C0P2500-60**
	25000	G1/2	80	21,6	**C0P2500-80**

Symbol	Force at 6 bar N	Spring force Max N	Spring force Min N	Conn.	Stroke mm	Weight Kg	Order code
Single acting 	1600	314	128	G1/4	50	0,9	**C0P160-50S**
	1600	314	128	G1/4	80	1,1	**C0P160-80S**
	3000	314	128	G1/4	50	1,2	**C0P300-50S**
	3000	314	128	G1/4	80	1,4	**C0P300-80S**
	3000	294	98	G1/4	40	2,8	**C0D300-40S**
	6000	638	98	G1/4	50	5,9	**C0D600-50S**
	12000	981	235	G1/2	50	12,4	**C0D1200-50S**
	25000	2700	883	G1/2	60	22,0	**C0P2500-60S**
	25000	2700	883	G1/2	100	22,4	**C0P2500-100S**

Thrust cylinders are supplied complete with piston rod nut.

The spring forces in single acting cylinders are sufficient to return the piston rod without load.

Dimensions: piston type

CAD drawings on the Internet

Our home page www.parker.com/euro_pneumatic includes the AirCad Drawing Library with 2D drawings for the main versions.

AirCad™ Drawing Library

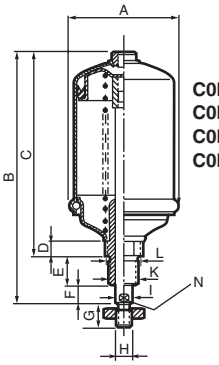

C0P160-50S
C0P160-80S
C0P300-50S
C0P300-80S

Single-acting

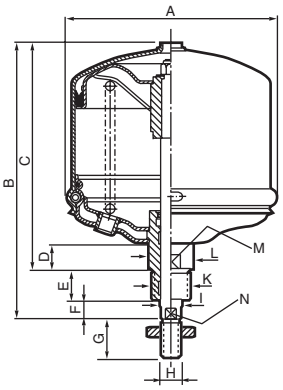

C0P2500-60S
C0P2500-100S

Single-acting

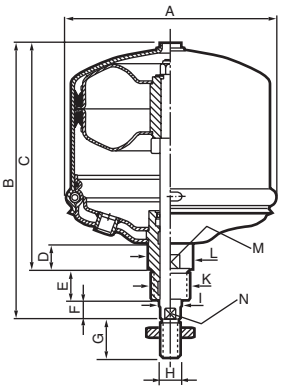

C0P2500-60
C0P2500-80

Double-acting

Type	Connection thread	A	B	C	D	E	F	G	H	I Ø	K	L Ø	M	N
C0P160-50S	G1/4	66	192	151	18	30	11	24	M12x1,75	14	M24x3	30	30	12
C0P160-80S	G1/4	66	222	181	18	30	11	24	M12x1,75	14	M24x3	30	30	12
C0P300-50S	G1/4	93	192	151	18	30	11	24	M12x1,75	14	M24x3	30	30	12
C0P300-80S	G1/4	93	222	181	18	30	11	24	M12x1,75	14	M24x3	30	30	12
C0P2500-60S	G1/2	268	345	285	33	40	20	48	M24x3	28	M48x3	56	50	25
C0P2500-100S	G1/2	268	385	325	33	40	20	48	M24x3	28	M48x3	56	50	25
C0P2500-60	G1/2	268	345	285	33	40	20	48	M24x3	28	M48x3	56	50	25
C0P2500-80	G1/2	268	385	325	33	40	20	48	M24x3	28	M48x3	56	50	25

Dimensions: diaphragm type

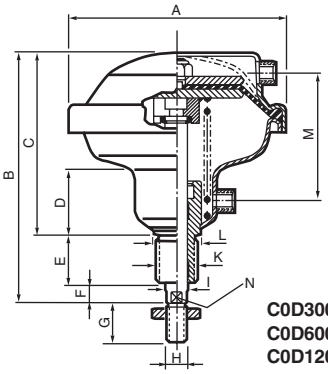

C0D300-40S
C0D600-50S
C0D1200-50S

Single-acting

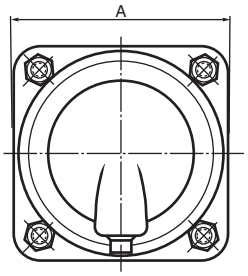

C0D300-40S **C0D300-40**
C0D600-50S **C0D600-50**
C0D1200-50S **C0D1200-50**

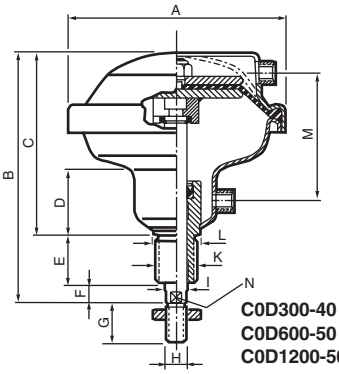

C0D300-40
C0D600-50
C0D1200-50

Double-acting

Type	Connection thread	A	B	C	D	E	F	G	H	I Ø	K	L Ø	M	N
C0D300-40S	G1/4	150	183	131	48	38	14	24	M12x1,75	16	M24x2	30	90	13
C0D300-40	G1/4	150	183	131	48	38	14	24	M12x1,75	16	M24x2	30	90	13
C0D600-50S	G1/4	195	212	154	55	38	20	32	M16x2	20	M36x3	43	107	17
C0D600-50	G1/4	195	212	154	55	38	20	32	M16x2	20	M36x3	43	107	17
C0D1200-50S	G1/2	261	243	178	58	45	20	40	M20x2,5	25	M36x3	43	117	22
C0D1200-50	G1/2	261	243	178	58	45	20	40	M20x2,5	25	M36x3	43	117	22

Tel: +45 63 12 83 00 | Email: ps@hymatik.com | www.hymatik.com | Hvidkaervej 27a, DK-5250 Odense SV, Denmark



Neck mounting nut

Neck mount. nut thread	Weight Kg	For cylinder	Order code
M24x2	0,04	C0D300-40	**9141100000**
M36x3	0,14	C0D600-50	**9141100100**
M36x3	0,14	C0D1200-50	**9141100100**
M48x3	0,10	C0P2500-60	**9141100200**
M48x3	0,10	C0P2500-80	**9141100200**
M24x3	0,04	C0P160-50S	**9141100300**
M24x3	0,04	C0P160-80S	**9141100300**
M24x3	0,04	C0P300-50S	**9141100300**
M24x3	0,04	C0P300-80S	**9141100300**
M24x2	0,04	C0D300-40S	**9141100000**
M36x3	0,14	C0D600-50S	**9141100100**
M36x3	0,14	C0D1200-50S	**9141100100**
M48x3	0,10	C0P2500-60S	**9141100200**
M48x3	0,10	C0P2500-100S	**9141100200**



Piston rod nut

Piston rod nut thread	Weight Kg	For cylinder	Order code
M12	0,01	C0D300-40	**0266211200**
M16	0,02	C0D600-50	**0266211400**
M20	0,03	C0D1200-50	**0266211600**
M24	0,04	C0P2500-60	**0266211800**
M24	0,04	C0P2500-80	**0266211800**
M12	0,01	C0P160-50S	**0266211200**
M12	0,01	C0P160-80S	**0266211200**
M12	0,01	C0P300-50S	**0266211200**
M12	0,01	C0P300-80S	**0266211200**
M12	0,01	C0D300-40S	**0266211200**
M16	0,02	C0D600-50S	**0266211400**
M20	0,03	C0D1200-50S	**0266211600**
M24	0,04	C0P2500-60S	**0266211800**
M24	0,04	C0P2500-100S	**0266211800**

Thrust cylinders are supplied complete with piston rod nut.

Seal kits for C0D and C0P

Description	Order code
C0D300-40/-40S	**9121655401**
C0D600-50/-50S	**9121655501**
C0D1200-50/-50S	**9121655601**
C0P160-50S/-80S	**9121655101**
C0P300-50S/-80S	**9121655201**
C0P2500-60/-80	**9121655301**
C0P2500-60S/-100S	**9121655302**

Grease for C0D and C0P



Weight	Order code
30 g	**9127394541**

Press stand for thrust cylinders

A simple press for efficient mounting and pressing can easily be built by screwing the thrust cylinders into the threaded holes in the very stable and strong steel press stand. The stand is available in two versions with different fastening threads for the cylinders.

The top plate has two different threads, and can be rotated through 180 degrees to present the correct thread for nose fitting of the cylinders.

The sub-base is fitted with a T-track for easy mounting of accessories. It also has two through holes for simple and secure fitting to a work bench.



NOTE! Remember that an approved two-handed press control must be used with the cylinders and the press stand to prevent crush injuries.
We recommend the use of our type PXP two-handed press control. It is available in a number of versions, and is simple, ergonomic and safe to incorporate in the press stand. It meets the requirements of safety standards EN574 and EN954-1.

For more information, see our website:
www.parker.com/euro_pneumatic

Description	Threads A/B	Weight kg	Order No.
Press stand for C0P160-50S, C0P160-80S, C0P300-50S, C0P300-80S, C0D300-40, C0D300-40S and C0D300-50S	M24x2/M24x3	24	**C0P-C0D-P01**
Press stand for C0D600-40, C0D600-50S, C0D1200-50S, C0D1200-80S, C0P2500-60, C0P2500-80, C0P2500-60S and C0P2500-100S	M36x3/M48x3	24	**C0P-C0D-P02**

Tel: +45 63 12 83 00 | Email: ps@hymatik.com | www.hymatik.com | Hvidkaervej 27a, DK-5250 Odense SV, Denmark

Dimensions

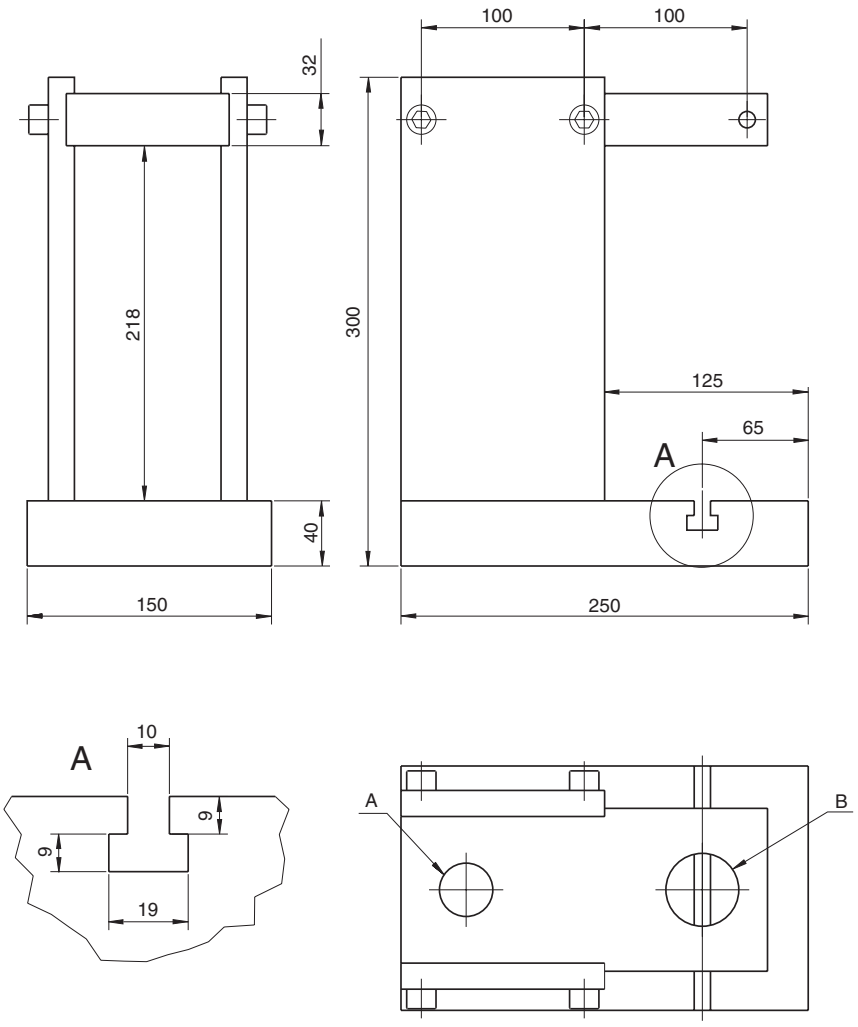

Tel: +45 63 12 83 00 | Email: ps@hymatik.com | www.hymatik.com | Hvidkaervej 27a, DK-5250 Odense SV, Denmark

Parker Worldwide

AE – UAE, Dubai
Tel: +971 4 8875600
parker.me@parker.com

AR – Argentina, Buenos Aires
Tel: +54 3327 44 4129

AT – Austria, Wiener Neustadt
Tel: +43 (0)2622 23501-0
parker.austria@parker.com

AT – Eastern Europe,
Wiener Neustadt
Tel: +43 (0)2622 23501 970
parker.easteurope@parker.com

AU – Australia, Castle Hill
Tel: +61 (0)2-9634 7777

AZ – Azerbaijan, Baku
Tel: +994 50 2233 458
parker.azerbaijan@parker.com

BE/LX – Belgium, Nivelles
Tel: +32 (0)67 280 900
parker.belgium@parker.com

BR – Brazil, Cachoeirinha RS
Tel: +55 51 3470 9144

BY – Belarus, Minsk
Tel: +375 17 209 9399
parker.belarus@parker.com

CA – Canada, Milton, Ontario
Tel: +1 905 693 3000

CH – Switzerland, Etoy
Tel: +41 (0) 21 821 02 30
parker.switzerland@parker.com

CN – China, Shanghai
Tel: +86 21 5031 2525

CZ – Czech Republic, Klecany
Tel: +420 284 083 111
parker.czechrepublic@parker.com

DE – Germany, Kaarst
Tel: +49 (0)2131 4016 0
parker.germany@parker.com

DK – Denmark, Ballerup
Tel: +45 43 56 04 00
parker.denmark@parker.com

ES – Spain, Madrid
Tel: +34 902 33 00 01
parker.spain@parker.com

FI – Finland, Vantaa
Tel: +358 (0)20 753 2500
parker.finland@parker.com

FR – France, Contamine s/Arve
Tel: +33 (0)4 50 25 80 25
parker.france@parker.com

GR – Greece, Athens
Tel: +30 210 933 6450
parker.greece@parker.com

HK – Hong Kong
Tel: +852 2428 8008

HU – Hungary, Budapest
Tel: +36 1 220 4155
parker.hungary@parker.com

IE – Ireland, Dublin
Tel: +353 (0)1 466 6370
parker.ireland@parker.com

IN – India, Mumbai
Tel: +91 22 6513 7081-85

IT – Italy, Corsico (MI)
Tel: +39 02 45 19 21
parker.italy@parker.com

JP – Japan, Fujisawa
Tel: +(81) 4 6635 3050

KR – South Korea, Seoul
Tel: +82 2 559 0400

KZ – Kazakhstan, Almaty
Tel: +7 7272 505 800
parker.easteurope@parker.com

LV – Latvia, Riga
Tel: +371 6 745 2601
parker.latvia@parker.com

MX – Mexico, Apodaca
Tel: +52 81 8156 6000

MY – Malaysia, Subang Jaya
Tel: +60 3 5638 1476

NL – The Netherlands,
Oldenzaal
Tel: +31 (0)541 585 000
parker.nl@parker.com

NO – Norway, Ski
Tel: +47 64 91 10 00
parker.norway@parker.com

NZ – New Zealand, Mt Wellington
Tel: +64 9 574 1744

PL – Poland, Warsaw
Tel: +48 (0)22 573 24 00
parker.poland@parker.com

PT – Portugal, Leca da Palmeira
Tel: +351 22 999 7360
parker.portugal@parker.com

RO – Romania, Bucharest
Tel: +40 21 252 1382
parker.romania@parker.com

RU – Russia, Moscow
Tel: +7 495 645-2156
parker.russia@parker.com

SE – Sweden, Spånga
Tel: +46 (0)8 59 79 50 00
parker.sweden@parker.com

SG – Singapore
Tel: +65 6887 6300

SK – Slovakia, Banská Bystrica
Tel: +421 484 162 252
parker.slovakia@parker.com

SL – Slovenia, Novo Mesto
Tel: +386 7 337 6650
parker.slovenia@parker.com

TH – Thailand, Bangkok
Tel: +662 717 8140

TR – Turkey, Istanbul
Tel: +90 216 4997081
parker.turkey@parker.com

TW – Taiwan, Taipei
Tel: +886 2 2298 8987

UA – Ukraine, Kiev
Tel +380 44 494 2731
parker.ukraine@parker.com

UK – United Kingdom,
Warwick
Tel: +44 (0)1926 317 878
parker.uk@parker.com

US – USA, Cleveland
Tel: +1 216 896 3000

VE – Venezuela, Caracas
Tel: +58 212 238 5422

ZA – South Africa,
Kempton Park
Tel: +27 (0)11 961 0700
parker.southafrica@parker.com

European Product Information Centre
Free phone: 00 800 27 27 5374
(from AT, BE, CH, CZ, DE, DK, EE, EI, ES, FI, FR, IT, NL, NO, PL, RU, SE, SK, UK, ZA)

© 2008 Parker Hannifin Corporation. All rights reserved.

Catalogue PDE2563TCUK-ul. April 2008

Parker Hannifin Ltd
Pneumatic Division Europe
The Collins Centre,
Lichfield South, Wall Island,
Birmingham Road, Lichfield.
WS14 0QP United Kingdom
Tel.: +44 (0) 1543 483800
Fax: +44 (0) 1543 483801
www.parker.com/euro_pneumatic

Your local authorized Parker distributor