



aerospace
climate control
electromechanical
filtration
fluid & gas handling
hydraulics
pneumatics
process control
sealing & shielding



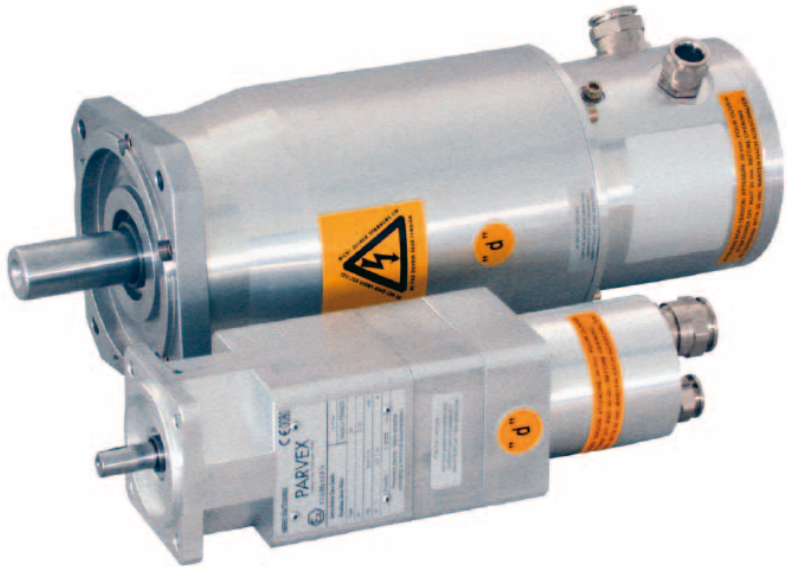

EX Series

Explosion Proof Servo Motor

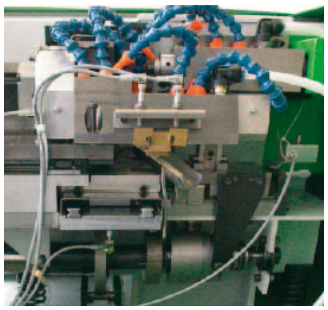

Parker

ENGINEERING YOUR SUCCESS.

WARNING — USER RESPONSIBILITY

FAILURE OR IMPROPER SELECTION OR IMPROPER USE OF THE PRODUCTS DESCRIBED HEREIN OR RELATED ITEMS CAN CAUSE DEATH, PERSONAL INJURY AND PROPERTY DAMAGE.

- This document and other information from Parker-Hannifin Corporation, its subsidiaries and authorized distributors provide product or system options for further investigation by users having technical expertise.
- The user, through its own analysis and testing, is solely responsible for making the final selection of the system and components and assuring that all performance, endurance, maintenance, safety and warning requirements of the application are met. The user must analyze all aspects of the application, follow applicable industry standards, and follow the information concerning the product in the current product catalog and in any other materials provided from Parker or its subsidiaries or authorized distributors.
- To the extent that Parker or its subsidiaries or authorized distributors provide component or system options based upon data or specifications provided by the user, the user is responsible for determining that such data and specifications are suitable and sufficient for all applications and reasonably foreseeable uses of the components or systems.

Explosion Proof Servo Motor - EX Series

Overview 5

Standards 6
- Hazardous Areas Classification 6
- Additional Information for Servomotors in Dust Atmosphere 7
- Compliance with North American standards 7

EX Servo Motors - CE Marked for Explosive Atmospheres 8
- Technical Data 8
- Drive Associations 9
- Dimensions (Resolver Version) 10
- Order Code 12

EX Servo Motors - UL Approved for Explosive Atmospheres 13
- Technical Data 13
- Drive Associations 13
- Dimensions (Resolver Version) 14
- Order Code 16

Feedback Sensors for CE and UL Motors 17

Tel: +45 63 12 83 00 | Email: ps@hymatik.com | www.hymatik.com | Hvidkaervej 27a, DK-5250 Odense SV, Denmark

Parker Hannifin

The global leader in motion and control technologies

A world class player on a local stage

Global Product Design

Parker Hannifin has more than 40 years experience in the design and manufacturing of drives, controls, motors and mechanical products. With dedicated global product development teams, Parker draws on industry-leading technological leadership and experience from engineering teams in Europe, North America and Asia.

Local Application Expertise

Parker has local engineering resources committed to adapting and applying our current products and technologies to best fit our customers' needs.

Manufacturing to Meet Our Customers' Needs

Parker is committed to meeting the increasing service demands that our customers require to succeed in the global industrial market. Parker's manufacturing teams seek continuous improvement through the implementation of lean manufacturing methods throughout the process. We measure ourselves on meeting our customers' expectations of quality and delivery, not just our own. In order to meet these expectations, Parker operates and continues to invest in our manufacturing facilities in Europe, North America and Asia.

Electromechanical Worldwide Manufacturing Locations

Europe
Littlehampton, United Kingdom
Dijon, France
Offenburg, Germany
Filderstadt, Germany
Milan, Italy

Asia
Wuxi, China
Chennai, India

North America
Rohnert Park, California
Irwin, Pennsylvania
Charlotte, North Carolina
New Ulm, Minnesota



Offenburg, Germany

Local Manufacturing and Support in Europe

Parker provides sales assistance and local technical support through a network of dedicated sales teams and authorized technical distributors throughout Europe.

For contact information, please refer to the Sales Offices on the back cover of this document or visit www.parker.com



Milan, Italy



Littlehampton, UK

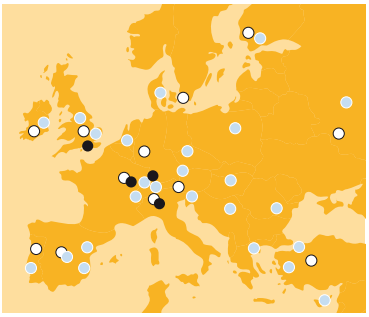

Electromechanical Manufacturing
Parker Sales Offices
Distributors



Dijon, France

Explosion Proof Servo Motor - EX Series

Overview

Description

EX series is a range of permanent magnet servo motor designed for use in explosive atmospheres. Featuring robust explosion-proof housings, EX motors are capable of bearing internal explosions with no risks of propagation to the neighbouring environment. Two versions are available, conforming with North American or European safety standards. EX servomotors are characterized by excellent motion quality, great acceleration / deceleration capabilities, and high torque output over a wide speed range. Various winding variants and numerous options are available to offer maximum flexibility.

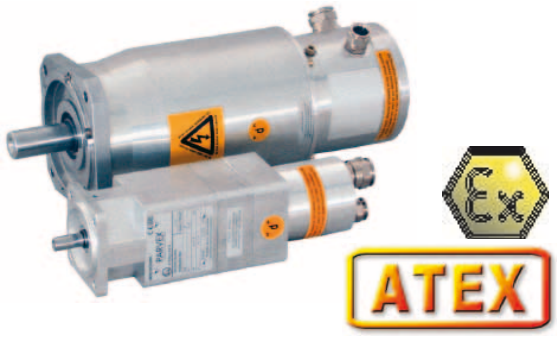

Advantages

- Servo motors with explosion proof housings
- CE or UL versions available
- High dynamic performance
- Compact and robust
- Maintenance free

Applications

- Food, Pharma & Beverage
- Material Forming
- Printing Industry
- Hazardous / Ex Enviroment
- Painting robots

Features

- Mounting
  - Flange with clearance holes
- Mechanical interface
  - Solid smooth shaft (standard)
  - Solid shaft with key (option)
- Feedback sensors
  - 2 pole resolver (standard)
  - Absolute EnDat encoder (option)
  - Absolute Hiperface encoder (option)
- Thermal protection
  - Thermoswitches and thermofuses integrated in the windings
- Other options
  - Parking brake

Technical Characteristics - Overview

Motor type	Permanent magnet synchronous motors	
Number of poles	10	
Torque range	1.75 ... 35 Nm	
Speed range	2000...8000 min^{-1}	
Marking	CE	UL
Voltage supply	230 / 400 VAC	230 / 480 VAC
Conformance	ATEX 94/9/EC Directive	UL 674 standard: Electric Motors and Generators for use in Division 1 Hazardous (Classified) Locations
	EN60079-0, EN60079-1 EN61241-0 and EN61241-1 standards	
Classification	II 2G Ex d IIB T4 IP64 (Gas)	Class 1, Division 1, Group C & D
	II 2GD Ex d IIB T4 IP65 Ex tD A21 IP65 T135 °C (Gas and dust)	
Ingress protection level	IP64 (standard)	IP65
	IP65 (option)	
Connections	Cable glands	Tapped holes

Standards

Hazardous Areas Classification

Dangerous Areas Identification

European directive 99/92/EC makes explicit the responsibility of employers to protect employees who may be exposed to risk of ATEX environments (Explosive Atmosphere). The employer must assess the risk and classify potentially dangerous areas. Equipment and materials must also be suited for use in dangerous areas in accordance with ATEX directive 94/9/EC.

Hazard	Permanent	Occasional	Unusal
Definition	Explosive atmospheres present continuously, for long periods or frequently	Explosive atmospheres are likely to occur	Explosive atmospheres are unlikely to occur or present only infrequently and for a short period only
Gas and vapour	Area 0	Area 1	Area 2
Dust	Area 20	Area 21	Area 22
Category	1 Very high level of protection	2 High level of protection	3 Normal level of protection

EX motors can be used in these areas

Equipment identification

Ex series is a range of permanent magnets servomotors designed for use in explosive atmospheres and are CE marked in accordance with ATEX directive 94/9/CE
Two versions are available:

- Gaseous atmospheres: II2 G Ex d IIB T4 IP64 – Group IIA or IIB – category 2G– areas 1 and 2.
- Gaseous and dusty atmospheres: II2 GD Ex d IIB T4 IP65 and Ex tD A21 IP65 T135 °C –
- Group IIA or IIB – category 2GD – areas 21 and 22.

All devices intended for use in hazardous areas must have standard CE inspection certificates and more specifically bear an ATEX mark.

II	2	G	Ex	d	IIB	T4	IP64

Equipment group and category		Area		Ex	Type of protection	Gas group		Temperature class*	
I Mine	M1 Very high level of protection	G Gas Vapour	D Dust	Protection against explosions	o Oil immersion	I Mine	Methane	T1 450 °C	IP64
	M2 High level of protection				p Pressurized apparatus			T2 300 °C	
II Surface	1 Very high level of protection				d Flameproof enclosure	II Surface	A Propane	T3 200 °C	
	2 High level of protection				e Increased safety		B Ethylene	T4 135 °C	IP65
	3 Normal level of protection				m Encapsulation		C Hydrogen Acetylene	T5 100 °C	
					i Intrinsic safety			T6 85 °C	

* Maximum surface temperature

Tel: +45 63 12 83 00 | Email: ps@hymatik.com | www.hymatik.com | Hvidkaervej 27a, DK-5250 Odense SV, Denmark

Additional Information for Servomotors in Dust Atmosphere

EX servomotors with IP65 option are designed for esplosive atmospheres and are fitted with a lip seal at the customer shaft end.

With protection by enclosures «tD», they are designed to operate in combustible dust atmospheres, areas 21 and 22, («A21»).

In accordance with EN 6124-0: 2006 and EN 61241-1: 2004 standards.
Classification:
II2 D Ex tD A21 IP65 T135 °C

Classification of common combustible gases and vapours according to temperature class and explosion group

Group	Temperature class					
	T1	T2	T3	T4	T5	T6
I	Methane					
II A	Acetic acid Acetone Ammonia Benzene Carbon monoxide Ethane Ethyl... Methane Methanol Methyl... Naphtalene Propane Toluene Xylene	Butyl acetate Amylic alcohol Liquefied gas Natural gas Butane Ethyl alcohol	Cyclohexane Cyclohexanol Diesel fuels Gasoline Heptane Hexane Pentane Petroleum (depending on composition)	Acetaldehyde Ether		
II B	Coke gas	Butadiene Ethylene Ethylbenzene Ethylene oxide	Hydrogen sulphide Isoprene Petroleum (depending on composition)	Ethyl ether		
II C	Hydrogen	Acetylene				Carbon disulphide Ethyl nitrate

Compliance with North American standards

EX servomotors are CLASS 1, division 1, Groups C and D, explosion-proof apparatus designed to operate in explosive atmospheres in accordance with standard UL1004 and UL674.

c UL US LISTED

Marking in accordance with Standard UL674

Class I	Division 1	Group C&D	Temperature class	
Class I Gas, vapour and liquids	Explosive atmospheres can exist all the time or some of the time under normal operating conditions	A Acetylene	T1 450 °C	IP65
		B Hydrogen	T2 300 °C	
		C Ethylene	T3 200 °C	
		D Propane	T4 135 °C	
Class II Dust		E, F, G	T4A 120 °C	
Class III Fibers			T5 100 °C	
			T6 85 °C	

Tel: +45 63 12 83 00 | Email: ps@hymatik.com | www.hymatik.com | Hvidkaervej 27a, DK-5250 Odense SV, Denmark

EX Servo Motors - CE Marked for Explosive Atmospheres

Technical Data

Rated Speed N_{max} [min^{-1}]	Stall Torque M_0 [Nm]	Stall Current I_0 [A_{RMS}]	Rated Torque M_N [Nm]	Rated Current I_N [A_{RMS}]	Peak Torque M_{max} [Nm]	Peak Current I_{max} [A_{RMS}]	Max. Speed with Compax3 N_{max} [min^{-1}]	Moment of Inertia J [$kgmm^2$]	Product Code					
230 VAC power supply														
2300	1.75	1.24	1.66	1.19	6.6	5.64	1960	79	EX310E	■	PR1	■	■	■
4000	1.75	2.16	1.54	1.96	6.6	9.85	3630	79	EX310E	■	KR1	■	■	■
2300	3.5	2.46	3.18	2.26	13.4	11.3	2030	290	EX420E	■	PR1	■	■	■
4000	3.5	4.26	2.67	3.33	13.4	19.6	3700	290	EX420E	■	JR1	■	■	■
3200	4.8	4.57	3.74	3.68	18.8	21	2930	426	EX430E	■	JR1	■	■	■
4000	4.8	5.79	3.26	4.07	18.8	26.6	3790	426	EX430E	■	FR1	■	■	■
2500	7	5.51	5.49	4.47	26.7	24.8	2310	980	EX620E	■	OR1	■	■	■
3000	10.4	9.28	7.24	6.75	40	42.2	2860	1470	EX630E	■	IR1	■	■	■
2200	14	9.28	11.16	7.49	50	41.8	2050	3200	EX820E	■	RR1	■	■	■
3600	14	14.85	7.53	8.3	50	66.9	3430	3200	EX820E	■	LR1	■	■	■
2200	24.5	16	14.18	9.54	92	72.7	2120	6200	EX840E	■	JR1	■	■	■
2500	35	27.9	9	7.82	137	133	2500	9200	EX860E	■	DR1	■	■	■
400 VAC power supply														
4000	1.75	1.24	1.54	1.12	6.6	5.64	3600	79	EX310E	■	PR1	■	■	■
2000	3.5	1.24	3.22	1.15	13.4	5.68	1740	290	EX420E	■	VR1	■	■	■
4000	3.5	2.46	2.68	1.93	13.4	11.3	3720	290	EX420E	■	PR1	■	■	■
3000	4.8	2.46	3.9	2.03	18.8	11.3	2740	426	EX430E	■	PR1	■	■	■
4000	4.8	3.3	3.26	2.31	18.8	15.1	3740	426	EX430E	■	LR1	■	■	■
4300	7	5.51	3.13	2.75	26.7	24.8	4240	980	EX620E	■	OR1	■	■	■
2900	10.4	5.11	7.42	3.8	40	23.2	2750	1470	EX630E	■	YR1	■	■	■
4000	10.4	6.92	5.2	3.76	40	31.4	3820	1470	EX630E	■	NR1	■	■	■
2200	14	5.4	11.16	4.36	50	24.3	2080	3200	EX820E	■	WR1	■	■	■
3600	14	9.3	7.53	5.19	50	41.8	3600	3200	EX820E	■	RR1	■	■	■
2100	24.5	8.55	15	5.37	92	38.8	1950	6200	EX840E	■	QR1	■	■	■
3300	24.5	14.3	2.85	2.07	92	64.7	3300	6200	EX840E	■	KR1	■	■	■
2500	35	15.7	9	4.4	137	75	2500	9200	EX860E	■	JR1	■	■	■

Tel: +45 63 12 83 00 | Email: ps@hymatik.com | www.hymatik.com | Hvidkaervej 27a, DK-5250 Odense SV, Denmark

Drive Associations

Motor		Rated Speed N_{max} [min^{-1}]	Associated Drive Sizes			
			Compax3		SLVD-N	
			Drive	Max. Speed with Compax3 N_{max} [min^{-1}]	Drive	Max. Speed with SLVD-N N_{max} [min^{-1}]
230 VAC power supply						
EX310E■PR1	■■■	2300	C3S025V2...	1960	SLVD1N	1960
EX310E■KR1	■■■	4000	C3S025V2...	3630	SLVD2N	3630
EX420E■PR1	■■■	2300	C3S025V2...	2030	SLVD2N	2030
EX420E■JR1	■■■	4000	C3S063V2...	3700	SLVD5N	3700
EX430E■JR1	■■■	3200	C3S063V2...	2930	SLVD5N	2930
EX430E■FR1	■■■	4000	C3S063V2...	3790	SLVD7N	3790
EX620E■OR1	■■■	2500	C3S063V2...	2310	SLVD7N	2310
EX630E■IR1	■■■	3000	C3S100V2...	2860	SLVD10N	2860
EX820E■RR1	■■■	2200	C3S100V2...	2050	SLVD10N	2050
EX820E■LR1	■■■	3600	C3S150V2...	3430	SLVD15N	3430
EX840E■JR1	■■■	2200	-	2120	SLVD17N	2120
EX860E■DR1	■■■	2500	-	2500	-	-
400 VAC power supply						
EX310E■PR1	■■■	4000	C3S015V4...	3600	-	-
EX420E■VR1	■■■	2000	C3S015V4...	1740	-	-
EX420E■PR1	■■■	4000	C3S038V4...	3720	-	-
EX430E■PR1	■■■	3000	C3S038V4...	2740	-	-
EX430E■LR1	■■■	4000	C3S038V4...	3740	-	-
EX620E■OR1	■■■	4300	C3S075V4...	4240	-	-
EX630E■YR1	■■■	2900	C3S075V4...	2750	-	-
EX630E■NR1	■■■	4000	C3S075V4...	3820	-	-
EX820E■WR1	■■■	2200	C3S075V4...	2080	-	-
EX820E■RR1	■■■	3600	C3S150V4...	3600	-	-
EX840E■QR1	■■■	2100	C3S150V4...	1950	-	-
EX840E■KR1	■■■	3300	C3S150V4...	3300	-	-
EX860E■JR1	■■■	2500	C3S300V4...	2500	-	-

Tel: +45 63 12 83 00 | Email: ps@hymatik.com | www.hymatik.com | Hvidkaervej 27a, DK-5250 Odense SV, Denmark

Dimensions (Resolver Version)

EX3

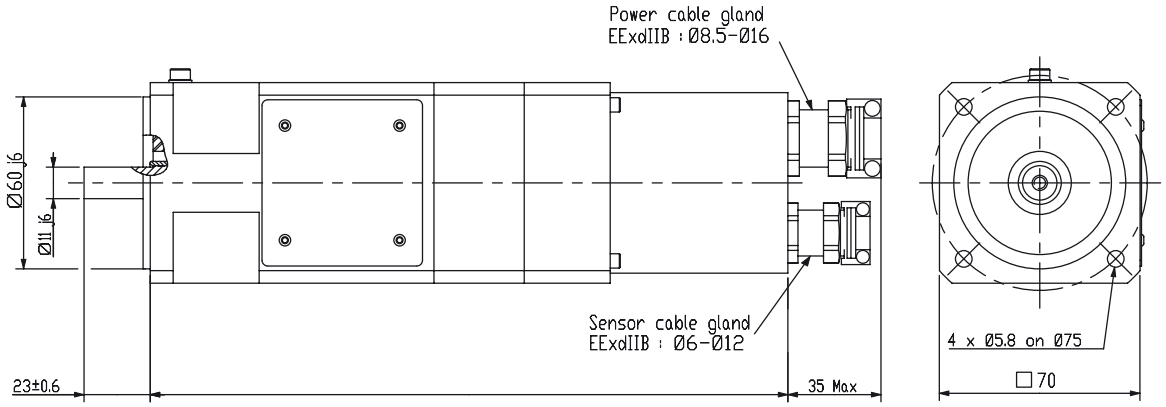

EX3	dimensions [mm]	
Motor	**L**	
	Without brake	**With brake**
EX310	225	255

EX4

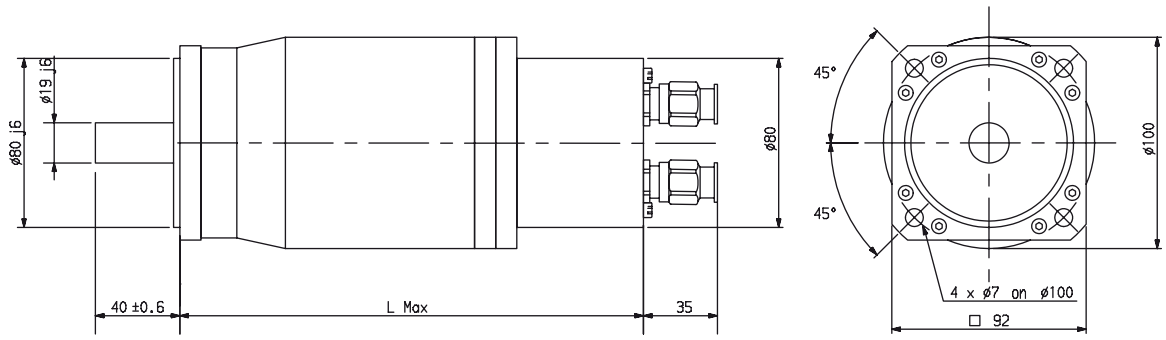

EX4	dimensions [mm]	
Motor	**L**	
	Without brake	**With brake**
EX420	265	290
EX430	290	315

Tel: +45 63 12 83 00 | Email: ps@hymatik.com | www.hymatik.com | Hvidkaervej 27a, DK-5250 Odense SV, Denmark

EX6 and EX8

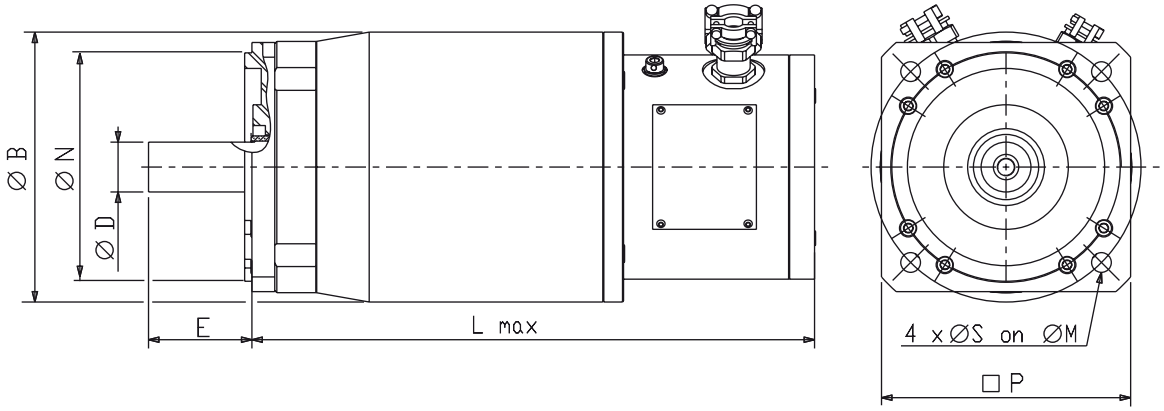

EX6-EX8	dimensions [mm]								
Motor								L	
	N	D	E	B	P	S	M	Without brake	With brake
EX620	110	24	50	130	120	8.4	130	275	290
EX630	110	24	50	130	120	8.4	130	300	325
EX820	130	32	58	165	155	12	165	290	325
EX840	130	32	58	165	155	12	165	350	385
EX860	130	32	58	165	155	12	165	410	445

Tel: +45 63 12 83 00 | Email: ps@hymatik.com | www.hymatik.com | Hvidkaervej 27a, DK-5250 Odense SV, Denmark

Order Code

EX Motors - CE marked

	1	2	3	4	5	6
Order example	**EX310E**	**A**	**PR1**	**2**	**0**	**1**

1	**Motor type**	
	EX310E **EX420E** **EX430E** **...**	see table EX Series CE Motors "Technical data"
2	**Feedback sensor**	
	A	2 pole resolver (Standard)
	K	Without feedback sensor (on request)
	R	Absolute singleturn HIPERFACE SKS36 Encoder (128 periods/rev)
	S	Absolute multiturn HIPERFACE SKM36 Encoder (128 periods/rev)
	T	Absolute singleturn HIPERFACE SRS50 encoder 1024 ppr (not available for EX3) (on request)
	U	Absolute multiturn HIPERFACE SRM50 encoder 1024 ppr (not available for EX3) (on request)
	V	Absolute singleturn EnDat ECN 1113 encoder (not available for EX3 and EX4)
	W	Absolute multiturn EnDat EQN 1125 encoder (not available for EX3 and EX4)
	Y	Without feedback sensor in combination with AC650S drive
3	**Motor type**	
	PR1 **KR1** **JR1** **...**	see table EX Series CE Motors "Technical data"
4	**Brake**	
	2	Motor without brake (standard) + thermal switch sensor
	5	Motor with brake + thermal switch sensor
5	**Ingress protection level**	
	0	IP64 (standard)
	1	IP65
6	**Shaft end**	
	0	Smooth shaft (standard)
	1	Keyed shaft

Motor power cable

	1	2	3	4	5	6	7	8
Order example	**C**	**C3**	**U**	**Q1**	**D1**	**R**	**0**	**005**

1	**Type**	
	C	Cable
	P	Extension cable
2	**Drive type**	
	C3	Compax3
	S2	638
	S5	SLVD
3	**Characteristic**	
	U	PUR jacket class 6, 100 °C max.
4	**Power cable**	
	Q1	For EX <15 Arms
	Q2	For EX <21 Arms
5	**Motor connector**	
	D1	for EX motor
6,7	**Fixed field**	
	R	
	0	
8	**Cable length** [1]	
	001	1 m
	...	
	050	50 m

Feedback cable

	1	2	3	4	5	6	7	8
Order example	**C**	**C3**	**U**	**A1**	**D1**	**R**	**0**	**005**

1	**Type**	
	C	Cable
	P	Extension cable
2	**Drive type**	
	C3	Compax 3
	S2	638
	S5	SLVD
3	**Characteristic**	
	U	PUR jacket class 6, 100 °C max.
4	**Feedback cable**	
	A1	Resolver
	V1	EnDat encoder
	R1	Hiperface encoder
5	**Motor connector**	
	D1	for EX motor
6,7	**Fixed field**	
	R	
	0	
8	**Cable length** [1]	
	001	1 m
	...	
	050	50 m

[1] The 3 last digits indicate cable length in meters ± 5 % max
For non-standard length cable with length different from: 1/2/3/4/5/10/15/20/25/30/40/50m please contact us.
Example CC3UQ1D1R0015: power cable, length = 15 m

Tel: +45 63 12 83 00 | Email: ps@hymatik.com | www.hymatik.com | Hvidkaervej 27a, DK-5250 Odense SV, Denmark

EX Servo Motors - UL Approved for Explosive Atmospheres

Technical Data

Rated Speed N_{max} [min^{-1}]	Stall Torque M_0 [Nm]	Stall Current I_0 [A_{RMS}]	Rated Torque M_N [Nm]	Rated Current I_N [A_{RMS}]	Peak Torque M_{max} [Nm]	Peak Current I_{max} [A_{RMS}]	Moment of Inertia J [$kgmm^2$]	Product Code					
230 VAC power supply													
4200	1.6	2.46	1.41	2.24	3.98	6.29	79	EX310U	■	UR1	■	1	■
4000	3.2	4.15	2.45	3.25	8	10.8	290	EX420U	■	IR1	■	1	■
3200	4.4	4.88	3.48	3.94	11	12.6	426	EX430U	■	GR1	■	1	■
2750	6.4	6.02	4.76	4.67	17.4	16.2	980	EX620U	■	MR1	■	1	■
2700	9.5	7.91	7.12	6.16	23.8	19.4	1470	EX630U	■	KR1	■	1	■
2300	12.9	9.1	10.1	7.21	30	22.8	3200	EX820U	■	QR1	■	1	■
1650	22.6	12	16.8	9	60	34.6	6200	EX840U	■	LR1	■	1	■
1500	31.4	13.9	22.3	10.01	90	43.5	9200	EX860U	■	JR1	■	1	■
480 VAC power supply													
7600	1.6	2.46	1.03	1.74	3.98	6.29	79	EX310U	■	UR1	■	1	■
7000	3.2	4.15	1.1	1.58	8	10.8	290	EX420U	■	IR1	■	1	■
5700	4.4	4.88	1.72	2.07	11	12.6	426	EX430U	■	GR1	■	1	■
5000	6.4	6.02	1.71	1.95	17.4	16.2	980	EX620U	■	MR1	■	1	■
4200	9.5	7.91	4.38	4.02	23.8	19.4	1470	EX630U	■	KR1	■	1	■
4000	12.9	9.1	5.77	4.27	30	22.8	3200	EX820U	■	QR1	■	1	■
3000	22.6	12	5.84	3.39	60	34.6	6200	EX840U	■	LR1	■	1	■
2500	31.4	13.9	8.31	4.01	90	43.5	9200	EX860U	■	JR1	■	1	■

Drive Associations

Motor	Rated Speed N_{max} [min^{-1}]	Associated Drive Sizes	
		Compax3	SLVD-N
230 VAC power supply			
EX310U■UR1■1■	4200	C3S025V2...	SLVD2N...UL
EX420U■IR1■1■	4000	C3S063V2...	SLVD5N...UL
EX430U■GR1■1■	3200	C3S063V2...	SLVD5N...UL
EX620U■MR1■1■	2750	C3S063V2...	SLVD7N...UL
EX630U■KR1■1■	2700	C3S100V2...	SLVD10N...UL
EX820U■QR1■1■	2300	C3S100V2...	SLVD10N...UL
EX840U■LR1■1■	1650	C3S150V2...	SLVD15N...UL
EX860U■JR1■1■	1500	C3S150V2...	SLVD15N...UL
480 VAC power supply			
EX310U■UR1■1■	7600	C3S038V4...	-
EX420U■IR1■1■	7000	C3S075V4...	-
EX430U■GR1■1■	5700	C3S075V4...	-
EX620U■MR1■1■	5000	C3S075V4...	-
EX630U■KR1■1■	4200	C3S150V4...	-
EX820U■QR1■1■	4000	C3S150V4...	-
EX840U■LR1■1■	3000	C3S150V4...	-
EX860U■JR1■1■	2500	C3S150V4...	-

Tel: +45 63 12 83 00 | Email: ps@hymatik.com | www.hymatik.com | Hvidkaervej 27a, DK-5250 Odense SV, Denmark

Dimensions (Resolver Version)

EX3

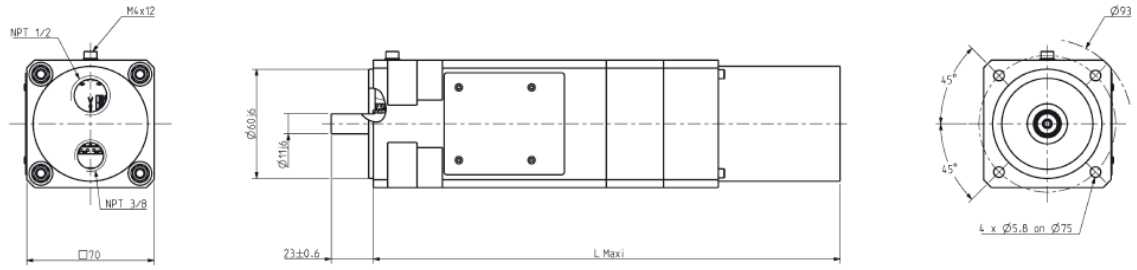

EX3 - UL	dimensions [mm]	
Motor	L_{max}	
	Without brake	With brake
EX310	230	260

EX3

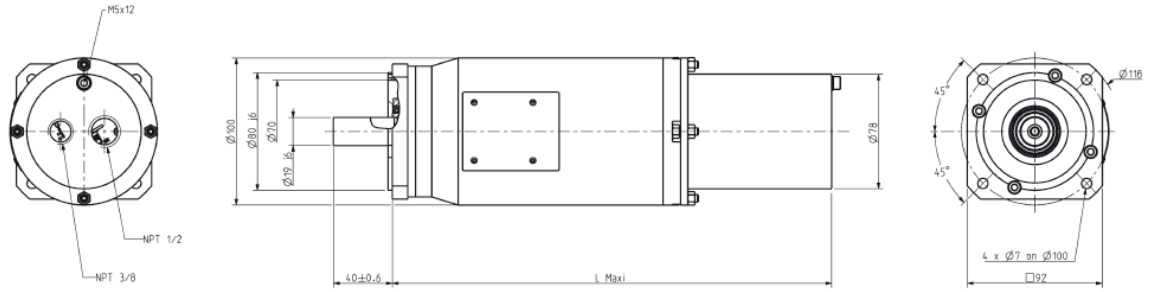

EX4 - UL	dimensions [mm]	
Motor	L_{max}	
	Without brake	With brake
EX420	260	305
EX430	305	330

Tel: +45 63 12 83 00 | Email: ps@hymatik.com | www.hymatik.com | Hvidkaervej 27a, DK-5250 Odense SV, Denmark

EX6

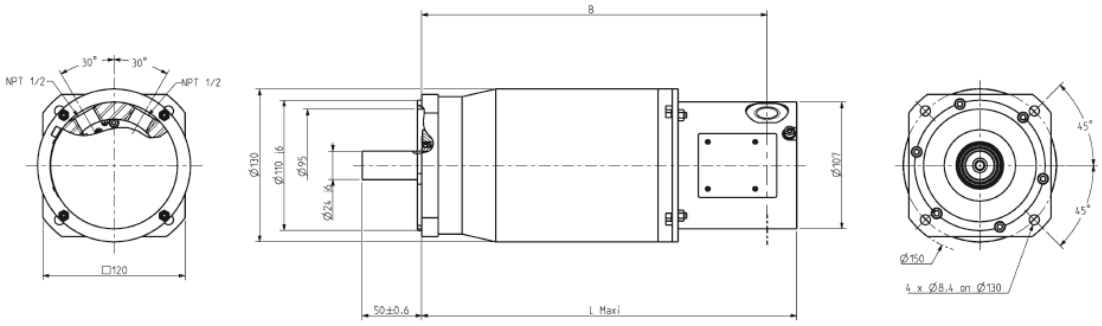

EX6 - UL	dimensions [mm]			
Motor	**L_{max}**		**B**	
	Without brake	**With brake**	**Without brake**	**With brake**
EX620	290	320	262.5	291.5
EX630	320	435	291.5	316.5

EX8

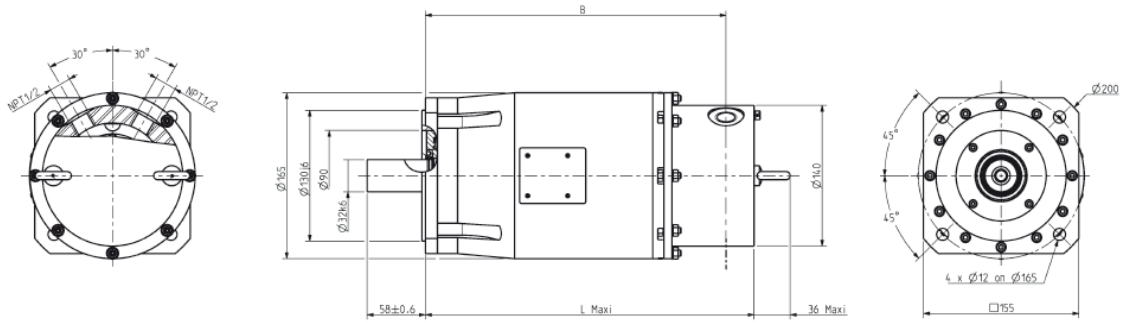

EX8 - UL	dimensions [mm]			
Motor	**L_{max}**		**B**	
	Without brake	**With brake**	**Without brake**	**With brake**
EX820	295	330	265	300
EX840	355	390	325	360
EX860	415	450	385	420

Order Code

EX Motors - UL marked

	1	2	3	4	5	6
Order example	**EX310U**	**A**	**UR1**	**2**	**1**	**0**

1	**Motor type**	
	EX310U **EX420U** **EX430U** **...**	see table EX Series UL servo motors "Technical data"
2	**Feedback sensor**	
	A	2 pole resolver (standard)
	K	Without feedback sensor (on request)
	R	Absolute singleturn HIPERFACE SKS36 Encoder (128 periods/rev)
	S	Absolute multiturn HIPERFACE SKM36 Encoder (128 periods/rev)
	T	Absolute singleturn HIPERFACE SRS50 encoder 1024 ppr (not available for EX3) (on request)
	U	Absolute multiturn HIPERFACE SRM50 encoder 1024 ppr (not available for EX3) (on request)
	V	Absolute singleturn EnDat ECN 1113 encoder (not available for EX3 and EX4)
	W	Absolute multiturn EnDat EQN 1125 encoder (not available for EX3 and EX4)
	Y	Without feedback sensor in combination with AC650S drive
3	**Motor type**	
	UR1 **IR1** **GR1** **...**	see table EX Series UL servo motors "Technical data"
4	**Brake**	
	2	Motor without brake + thermal switch sensor (standard)
	5	Motor with Brake + thermal switch sensor
5	**Ingress protection level**	
	1	IP65 (standard)
6	**Shaft End**	
	0	Smooth shaft (standard)
	1	Keyed shaft

Tel: +45 63 12 83 00 | Email: ps@hymatik.com | www.hymatik.com | Hvidkaervej 27a, DK-5250 Odense SV, Denmark

Feedback Sensors for CE and UL Motors

2 poles resolver - option A

- Accuracy: ±10' max
- Transformation ratio: 0.5 ±5 %
- Max. operating speed: 17 000 min^{-1}
- Working temperature range: -55...+155 °C
- Compatibility: EX3 to EX8

Single turn / Multiturn absolute encoder HIPERFACE SKS/SKM 36 - option R/S

- Number of sine/cosine periods per revolution: 128
- Absolute position per revolution: 4096 (12 bits)
- Number of absolutely encodable revolutions: 4096 (SKM36)
- Max. operating speed SKS36: 12 000 min^{-1}
- Max. operating speed SKM36: 9000 min^{-1}
- Working temperature range: -20...+110 °C
- Compatibility: EX3 to EX8

Single turn / Multiturn absolute encoder EnDat ECN1113/EQN1125 - option V/W

- Number of sine/cosine periods per revolution: 512
- Absolute position per revolution: 8192 (13 bits)
- Number of absolutely encodable revolutions: 4096
- Accuracy: ±60"
- Absolute position value EnDat 2.2
- Max. operating speed: 12 000 min^{-1}
- Working temperature range: -40...115 °C
- Compatibility: EX6 to EX8

Single turn / Multiturn absolute encoder HIPERFACE SRS/SRM 50 - option T/U (on request)

- Number of sine/cosine periods per revolution: 1024
- Number of absolutely encodable revolutions: 4096 (SRM50)
- Absolute position per revolution: 32768 (15 bits)
- Working speed up to which the absolute position can be reliably determined: 6000 min^{-1}
- Max. operating speed: 12 000 min^{-1}
- Working temperature range: -20...+115 °C
- Compatibility: EX4 to EX8

Multiturn absolute encoder HIPERFACE SEL37 - option Q (on request)

- Number of sine/cosine periods per revolution: 16
- Number of absolutely encodable revolutions: 4096
- Working speed up to which the absolute position can be reliably determined: 6000 min^{-1}
- Max. operating speed: 10 000 min^{-1}
- Working temperature range: -20...+115 °C
- Compatibility: EX3 to EX8

Tel: +45 63 12 83 00 | Email: ps@hymatik.com | www.hymatik.com | Hvidkaervej 27a, DK-5250 Odense SV, Denmark

Tel: +45 63 12 83 00 | Email: ps@hymatik.com | www.hymatik.com | Hvidkaervej 27a, DK-5250 Odense SV, Denmark

Parker's Motion & Control Technologies

At Parker, we're guided by a relentless drive to help our customers become more productive and achieve higher levels of profitability by engineering the best systems for their requirements. It means looking at customer applications from many angles to find new ways to create value. Whatever the motion and control technology need, Parker has the experience, breadth of product and global reach to consistently deliver. No company knows more about motion and control technology than Parker. For further info call 00800 27 27 5374.



AEROSPACE

Key Markets
- Aircraft engines
- Business & general aviation
- Commercial transports
- Land-based weapons systems
- Military aircraft
- Missiles & launch vehicles
- Regional transports
- Unmanned aerial vehicles

Key Products
- Flight control systems & components
- Fluid conveyance systems
- Fluid metering delivery & atomization devices
- Fuel systems & components
- Hydraulic systems & components
- Inert nitrogen generating systems
- Pneumatic systems & components
- Wheels & brakes



CLIMATE CONTROL

Key Markets
- Agriculture
- Air conditioning
- Food, beverage & dairy
- Life sciences & medical
- Precision cooling
- Processing
- Transportation

Key Products
- CO^2 controls
- Electronic controllers
- Filter driers
- Hand shut-off valves
- Hose & fittings
- Pressure regulating valves
- Refrigerant distributors
- Safety relief valves
- Solenoid valves
- Thermostatic expansion valves



ELECTROMECHANICAL

Key Markets
- Aerospace
- Factory automation
- Food & beverage
- Life science & medical
- Machine tools
- Packaging machinery
- Paper machinery
- Plastics machinery & converting
- Primary metals
- Semiconductor & electronics
- Textile
- Wire & cable

Key Products
- AC/DC drives & systems
- Electric actuators
- Controllers
- Gantry robots
- Gearheads
- Human machine interfaces
- Industrial PCs
- Inverters
- Linear motors, slides and stages
- Precision stages
- Stepper motors
- Servo motors, drives & controls
- Structural extrusions



FILTRATION

Key Markets
- Food & beverage
- Industrial machinery
- Life sciences
- Marine
- Mobile equipment
- Oil & gas
- Power generation
- Process
- Transportation

Key Products
- Analytical gas generators
- Compressed air & gas filters
- Condition monitoring
- Engine air, fuel & oil filtration & systems
- Hydraulic, lubrication & coolant filters
- Process, chemical, water & microfiltration filters
- Nitrogen, hydrogen & zero air generators



FLUID & GAS HANDLING

Key Markets
- Aerospace
- Agriculture
- Bulk chemical handling
- Construction machinery
- Food & beverage
- Fuel & gas delivery
- Industrial machinery
- Mobile
- Oil & gas
- Transportation
- Welding

Key Products
- Brass fittings & valves
- Diagnostic equipment
- Fluid conveyance systems
- Industrial hose
- PTFE & PFA hose, tubing & plastic fittings
- Rubber & thermoplastic hose & couplings
- Tube fittings & adapters
- Quick disconnects



HYDRAULICS

Key Markets
- Aerospace
- Aerial lift
- Agriculture
- Construction machinery
- Forestry
- Industrial machinery
- Mining
- Oil & gas
- Power generation & energy
- Truck hydraulics

Key Products
- Diagnostic equipment
- Hydraulic cylinders & accumulators
- Hydraulic motors & pumps
- Hydraulic systems
- Hydraulic valves & controls
- Power take-offs
- Rubber & thermoplastic hose & couplings
- Tube fittings & adapters
- Quick disconnects



PNEUMATICS

Key Markets
- Aerospace
- Conveyor & material handling
- Factory automation
- Food & beverage
- Life science & medical
- Machine tools
- Packaging machinery
- Transportation & automotive

Key Products
- Air preparation
- Compact cylinders
- Field bus valve systems
- Grippers
- Guided cylinders
- Manifolds
- Miniature fluidics
- Pneumatic accessories
- Pneumatic actuators & grippers
- Pneumatic valves and controls
- Rodless cylinders
- Rotary actuators
- Tie rod cylinders
- Vacuum generators, cups & sensors



PROCESS CONTROL

Key Markets
- Chemical & refining
- Food, beverage & dairy
- Medical & dental
- Microelectronics
- Oil & gas
- Power generation

Key Products
- Analytical sample conditioning products & systems
- Fluoropolymer chemical delivery fittings, valves & pumps
- High purity gas delivery fittings, valves & regulators
- Instrumentation fittings, valves & regulators
- Medium pressure fittings & valves
- Process control manifolds



SEALING & SHIELDING

Key Markets
- Aerospace
- Chemical processing
- Consumer
- Energy, oil & gas
- Fluid power
- General industrial
- Information technology
- Life sciences
- Military
- Semiconductor
- Telecommunications
- Transportation

Key Products
- Dynamic seals
- Elastomeric o-rings
- EMI shielding
- Extruded & precision-cut, fabricated elastomeric seals
- Homogeneous & inserted elastomeric shapes
- High temperature metal seals
- Metal & plastic retained composite seals
- Thermal management

Tel: +45 63 12 83 00 | Email: ps@hymatik.com | www.hymatik.com | Hvidkaervej 27a, DK-5250 Odense SV, Denmark

Parker Worldwide

Europe, Middle East, Africa

AE – United Arab Emirates, Dubai
Tel: +971 4 8127100
parker.me@parker.com

AT – Austria, Wiener Neustadt
Tel: +43 (0)2622 23501-0
parker.austria@parker.com

AT – Eastern Europe,
Wiener Neustadt
Tel: +43 (0)2622 23501 900
parker.easteurope@parker.com

AZ – Azerbaijan, Baku
Tel: +994 50 2233 458
parker.azerbaijan@parker.com

BE/LU – Belgium, Nivelles
Tel: +32 (0)67 280 900
parker.belgium@parker.com

BY – Belarus, Minsk
Tel: +375 17 209 9399
parker.belarus@parker.com

CH – Switzerland, Etoy
Tel: +41 (0)21 821 87 00
parker.switzerland@parker.com

CZ – Czech Republic, Klecany
Tel: +420 284 083 111
parker.czechrepublic@parker.com

DE – Germany, Kaarst
Tel: +49 (0)2131 4016 0
parker.germany@parker.com

DK – Denmark, Ballerup
Tel: +45 43 56 04 00
parker.denmark@parker.com

ES – Spain, Madrid
Tel: +34 902 330 001
parker.spain@parker.com

FI – Finland, Vantaa
Tel: +358 (0)20 753 2500
parker.finland@parker.com

FR – France, Contamine s/Arve
Tel: +33 (0)4 50 25 80 25
parker.france@parker.com

GR – Greece, Athens
Tel: +30 210 933 6450
parker.greece@parker.com

HU – Hungary, Budaörs
Tel: +36 23 885 470
parker.hungary@parker.com

IE – Ireland, Dublin
Tel: +353 (0)1 466 6370
parker.ireland@parker.com

IT – Italy, Corsico (MI)
Tel: +39 02 45 19 21
parker.italy@parker.com

KZ – Kazakhstan, Almaty
Tel: +7 7273 561 000
parker.easteurope@parker.com

NL – The Netherlands, Oldenzaal
Tel: +31 (0)541 585 000
parker.nl@parker.com

NO – Norway, Asker
Tel: +47 66 75 34 00
parker.norway@parker.com

PL – Poland, Warsaw
Tel: +48 (0)22 573 24 00
parker.poland@parker.com

PT – Portugal, Leca da Palmeira
Tel: +351 22 999 7360
parker.portugal@parker.com

RO – Romania, Bucharest
Tel: +40 21 252 1382
parker.romania@parker.com

RU – Russia, Moscow
Tel: +7 495 645-2156
parker.russia@parker.com

SE – Sweden, Spånga
Tel: +46 (0)8 59 79 50 00
parker.sweden@parker.com

SK – Slovakia, Banská Bystrica
Tel: +421 484 162 252
parker.slovakia@parker.com

SL – Slovenia, Novo Mesto
Tel: +386 7 337 6650
parker.slovenia@parker.com

TR – Turkey, Istanbul
Tel: +90 216 4997081
parker.turkey@parker.com

UA – Ukraine, Kiev
Tel +380 44 494 2731
parker.ukraine@parker.com

UK – United Kingdom, Warwick
Tel: +44 (0)1926 317 878
parker.uk@parker.com

ZA – South Africa, Kempton Park
Tel: +27 (0)11 961 0700
parker.southafrica@parker.com

North America

CA – Canada, Milton, Ontario
Tel: +1 905 693 3000

US – USA, Cleveland
Tel: +1 216 896 3000

Asia Pacific

AU – Australia, Castle Hill
Tel: +61 (0)2-9634 7777

CN – China, Shanghai
Tel: +86 21 2899 5000

HK – Hong Kong
Tel: +852 2428 8008

IN – India, Mumbai
Tel: +91 22 6513 7081-85

JP – Japan, Tokyo
Tel: +81 (0)3 6408 3901

KR – South Korea, Seoul
Tel: +82 2 559 0400

MY – Malaysia, Shah Alam
Tel: +60 3 7849 0800

NZ – New Zealand, Mt Wellington
Tel: +64 9 574 1744

SG – Singapore
Tel: +65 6887 6300

TH – Thailand, Bangkok
Tel: +662 186 7000-99

TW – Taiwan, Taipei
Tel: +886 2 2298 8987

South America

AR – Argentina, Buenos Aires
Tel: +54 3327 44 4129

BR – Brazil, Sao Jose dos Campos
Tel: +55 800 727 5374

CL – Chile, Santiago
Tel: +56 2 623 1216

MX – Mexico, Apodaca
Tel: +52 81 8156 6000

We reserve the right to make technical changes. The data correspond to the technical state at the time of printing.
© 2012 Parker Hannifin Corporation.
All rights reserved.

192-063001N2 November 2012

EMEA Product Information Centre
Free phone: 00 800 27 27 5374
(from AT, BE, CH, CZ, DE, DK, EE, ES, FI, FR, IE, IL, IS, IT, LU, MT, NL, NO, PL, PT, RU, SE, SK, UK, ZA)
US Product Information Centre
Toll-free number: 1-800-27 27 537
www.parker.com

Your local authorized Parker distributor