



aerospace
climate control
electromechanical
filtration
fluid & gas handling
hydraulics
pneumatics
process control
sealing & shielding



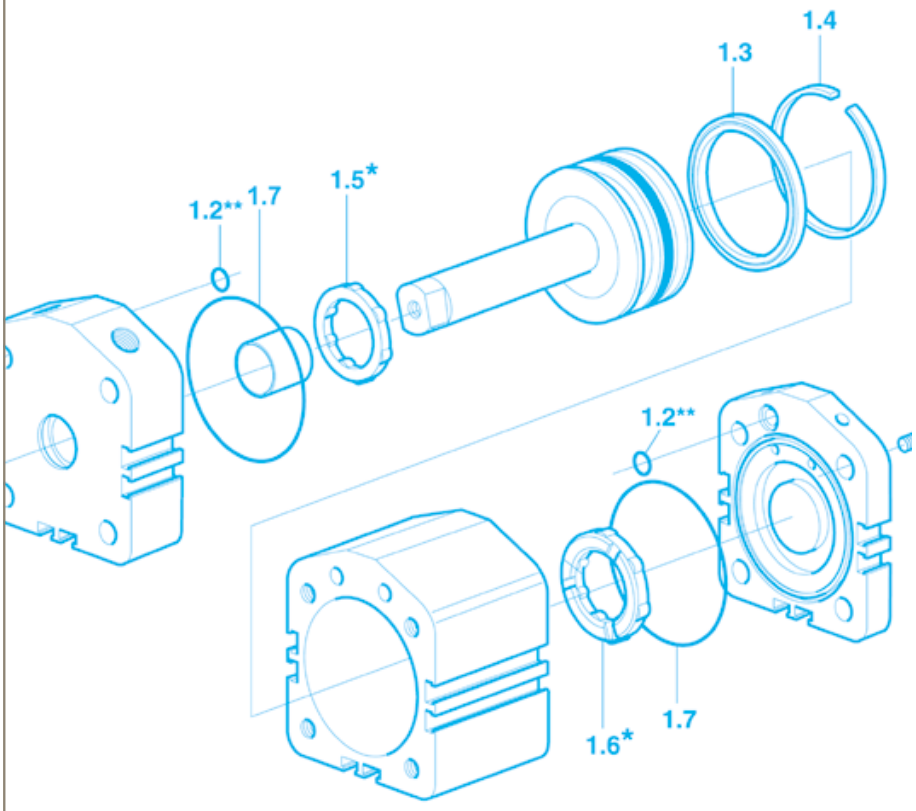

Pneumatic Products Spare Parts

PDE2600SPUK



Parker

ENGINEERING YOUR SUCCESS.

PDE2600SPUK

Pneumatic Product Spares Catalogue

Actuators — Page no.

ISO 15552 Cylinders ..... 6 - 7
ISO 15552 Cylinders (Basic Line) - P1D-B 8
ISO 15552 Cylinders (Extreme Line) - P1D-X 9
ISO 15552 Cylinders (Tie Rod line) - P1D-T ..... 10 - 11
ISO and VDMA Cylinders - P1E 12
ISO, VDMA and AFNOR Cylinders - P1C 13
ISO Cylinders - C41 14
Profile Cylinders - P1K 14
ISO 6431 Stainless Steel Cylinders bores 32 to 125 - P1S 15
Compact Cylinders - P1M 16
Thrust Cylinders - C0D / C0P 16
ISO 21287 Compact Cylinders - P1P 17
Compact Cylinders Ø12 - Ø25 - NZ 18
Compact Cylinders Ø32 - Ø100 - NZ 19
Compact Cylinders - SZ 20
B Series Cylinders 21
MB / SB Series Cylinders 21
C Series Cylinders 21
A / PA Series Cylinders 21
NFE49-001 and CNOMO 06-07-02 Cylinders - PX 22
Rotary Rack and Pinion Actuators - VRS / VRA 22
Twin Rod Cylinders - RDV 23
ISO 15552 Cylinders - AZ ..... 24 - 25
Twin Rod Cylinders - AZV 26
CT / C2T Cylinders 27
1" Brass Midget Air Cylinders 27
Rodless Magnetic Cylinders - P1Z 27
Rotary Rack and Pinion Actuators - RA 27
Hydrochecks - B181 28
Hydraulic Clamp Cylinders - VB 28
CH Series Cylinders 28
Grippers - P5GC 29
Compact Guided Cylinders - P5T 30
Stainless Steel Air Motors - P1V-S ..... 31 - 33
Robust Air Motors - P1V-M ..... 34 - 35
Air Motors Grey Housing - P1V-A 36
Rotary Vane Actuators - PRO / PRN 37
Rotary Vane Actuators - PV 38
Air Bellows - 9109 39

Tel: +45 63 12 83 00 | Email: ps@hymatik.com | www.hymatik.com | Hvidkaervej 27a, DK-5250 Odense SV, Denmark

Actuators — Page no.

Non Repairable

Short Stroke Cylinders - C05 40
Cartridge Cylinders - P1G 40
ISO 15524 Compact Cylinders - P1Q 40
Compact Cylinders - P1J 40
ISO 6432 Mini Cylinders - P1A-S 40
ISO 6432 Stainless Steel Cylinders bores 10 to 25 - P1S 40
All Round Cylinders R Series bores 10 to 63mm 40
Shock Absorbers - MC-SC 40

Handling Products

Non Repairable

Grippers - P5GA 41
Grippers - P5GB 41
Grippers - P5GD 41
Grippers - P5GL 41
Rotating Tables - P5RS 41
Precision Slide Tables - P5SS 41

Spares No Longer Available

3D Linear Units 42
Grippers - 3H 42
M16 and M25 Short Stroke Units 42
3D Base Rotate Units 42
3D Wrist Rotate Units 42
ISO 6432 Cylinders Ø10 - Ø25 - CXP 42
P5SP Precision Slide Tables 42
3F Carrier Units 42

Tel: +45 63 12 83 00 | Email: ps@hymatik.com | www.hymatik.com | Hvidkaervej 27a, DK-5250 Odense SV, Denmark

Control Devices — Page no.

Metal Spool Valves - Viking Xtreme 44
G1/8 and G1/4 Solenoid and Pilot Operated Valves - B Series 45
Manual & Mechanically Operated Valves - B45/53 46
Heavy Duty Poppet Valves 47
Directional Control Valves - VA 47
G1/8 Mini Poppet Valves - M5 47
Apollo ISO Valves 48
ISO 5599-1 Valves - Flexflow 49
ISO 5599-1 ISOMAX - DX1 - DX2 - DX3 50
ISO 15407-1 ISOMAX - DX01 - DX02 51
Isys Micro Valves 52
Moduflex Valve System - P2M 53
Interface - PS1 54
Compact Valves - PVL 55
PVL-B10 and PVLC10 Stackable and Stand-alone Inline Valves 56
G1/8 and G1/4 Ceramic Valves - PVD Everdure 56
Logic Processing ..... 57 - 58
Control and Process Duty - PXB 59
Solenoid Operators - P2E 60
Solenoid Operators - 15mm - P2E 61
Solenoid Operators - 22mm - P2F 62
Solenoid Operators - CNOMO - P2F 63

Air Preparation & Airline Accessories — Page no.

Moduflex FRLs 66
Modular Hi Flow FRLs - 1 inch - P3N 67
Parker Global Air Preparation System ..... 68 - 69
Lite Series Air Preparation System - P3L 70
Lite Air Preparation System - P3X 71
Air Preparation System - P3Y 72
Proportional Pressure Regulators - P3Z 73
High Flow Precision Pressure Regulators 74
Two Hand Control Units - PXP 74











Actuators

P1D ISO Cylinders



Seal kits

- Complete seal kits consisting of:
- Piston seals
- Cushioning seals
- Combined piston rod seal and scraper
- O-rings

P1D Cylinder version, single piston rod, piston made in plastic

Cyl. bore mm	Standard temperature	Standard temperature with scraper / rod seal made in FPM	Standard temperature with HDPE sealing	Standard temperature with dynamic rod lock
32	**P1D-6KRN**	**P1D-6KRV**	**P1D-6KRD**	**P1D-6KRNL**
40	**P1D-6LRN**	**P1D-6LRV**	**P1D-6LRD**	**P1D-6LRNL**
50	**P1D-6MRN**	**P1D-6MRV**	**P1D-6MRD**	**P1D-6MRNL**
63	**P1D-6NRN**	**P1D-6NRV**	**P1D-6NRD**	**P1D-6NRNL**
80	**P1D-6PRN**	**P1D-6PRV**	**P1D-6PRD**	**P1D-6PRNL**
100	**P1D-6QRN**	**P1D-6QRV**	**P1D-6QRD**	**P1D-6QRNL**
125	**P1D-6RRN**	**P1D-6RRV**	**P1D-6RRD**	**P1D-6RRNL**

P1D Cylinder version, through piston rod, piston made in plastic

Cyl. bore mm	Standard temperature	Standard temperature with scraper / rod seal made in FPM	Standard temperature with HDPE sealing	Standard temperature with dynamic rod lock
32	**P1D-6KRNF**	**On request**	**On request**	**On request**
40	**P1D-6LRNF**	**On request**	**On request**	**On request**
50	**P1D-6MRNF**	**On request**	**On request**	**On request**
63	**P1D-6NRNF**	**On request**	**On request**	**On request**
80	**P1D-6PRNF**	**On request**	**On request**	**On request**
100	**P1D-6QRNF**	**On request**	**On request**	**On request**
125	**P1D-6RRNF**	**On request**	**On request**	**On request**

As the P1D Series was also available for high (ie MF) and low (ie ML) temperature ranges, hydraulic (ie MJ) version and with metallic scraper (ie QC) options, here with are the part numbers for the maintenance for these cylinders.

Important: it is not possible to convert a P1D built for standard temperature to a high, low temp or hydraulic version because end caps and piston are not the same.

Note: These options are now available in the P1D-X Series only.

P1D Cylinder version, single piston rod

Cyl. bore mm	Standard temperature with metallic scraper	Low temperature	High temperature	Hydraulic version
32	**P1D-6KRQ**	**P1D-6KRLX**	**P1D-6KRFX**	**P1D-6KRHX**
40	**P1D-6LRQ**	**P1D-6LRL**	**P1D-6LRF**	**P1D-6LRH**
50	**P1D-6MRQ**	**P1D-6MRLX**	**P1D-6MRFX**	**P1D-6MRHX**
63	**P1D-6NRQ**	**P1D-6NRL**	**P1D-6NRF**	**P1D-6NRH**
80	**P1D-6PRQ**	**P1D-6PRL**	**P1D-6PRF**	**P1D-6PRH**
100	**P1D-6QRQ**	**P1D-6QRL**	**P1D-6QRF**	**P1D-6QRH**
125	**P1D-6RRQ**	**P1D-6RRL**	**P1D-6RRF**	**P1D-6RRH**

Greases



Standard	30g	**9127394541**
High temperature	30g	**9127394521**
Low temperature	30g	**9127394541**

Parker Hannifin Corporation
Pneumatic Division - Europe

Tel: +45 63 12 83 00 | Email: ps@hymatik.com | www.hymatik.com | Hvidkaervej 27a, DK-5250 Odense SV, Denmark

P1D ISO Cylinders

= Included in seal kit
= Screwdriver head
= Insexgrepp
= Tightening torque
= Lubricated with grease
= Locking fluid

Loctite 270 or Loctite 2701 locking fluid must be used

P1D-Standard
P1D-Ultra Clean
P1D-Pro Clean
P1D-Tie Rod

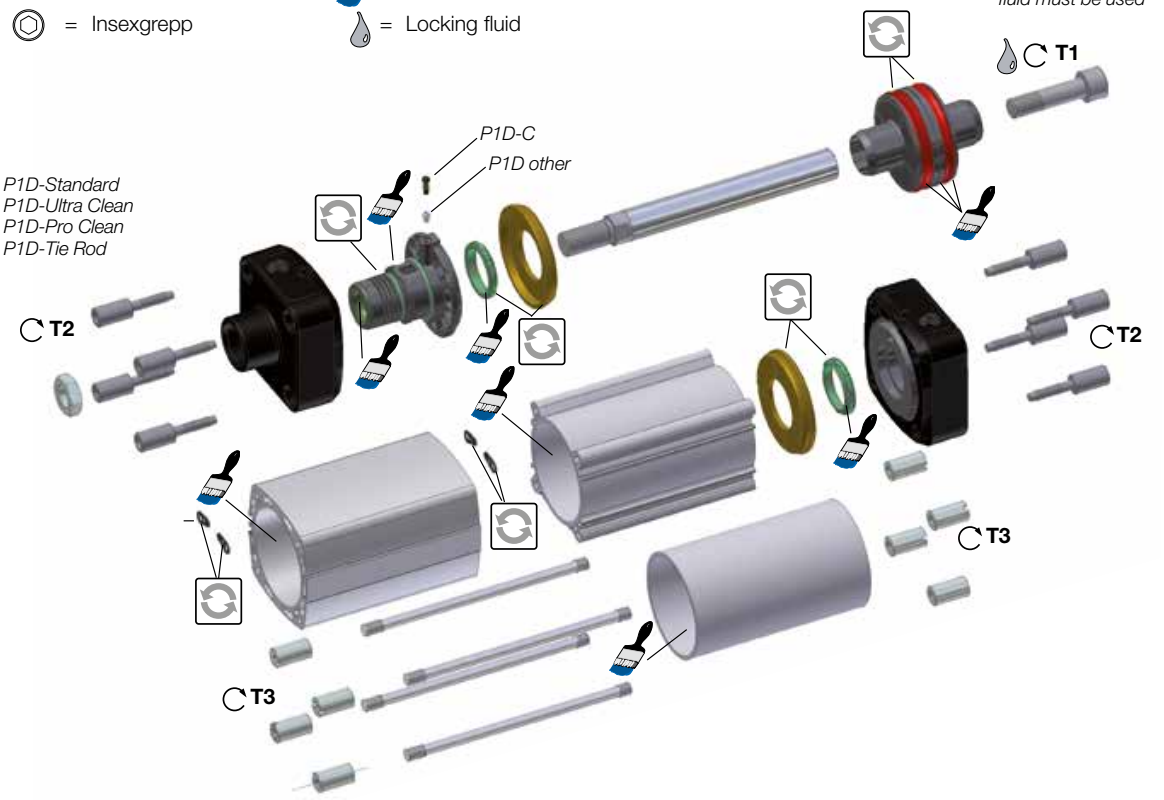

Cyl.-dia mm	Plastic piston T1 Nm	Alu. piston T1 Nm	NV mm	T2 Nm	NV mm	T3 Nm	NV mm	NV mm
32	4,5	15	6	8	6	6	6	
40	11	30	8	8	6	6	6	
50	20	40	10	20	8	11	8	
63	20	40	10	20	8	11	8	
80	40	120	14	20	6	20		3x16
100	120	120	14	20	6	20		3x16
125	120	120	14	70	8	40		4x18

P1D-B ISO Cylinders

- Complete seal kits consisting of:
- Piston seals
- Cushioning seals
- Piston rod seal
- O-rings
- Piston rod scraper seal



Seal kits

Bore mm	Standard temperature
32	**P1D-6KRNB**
40	**P1D-6LRNB**
50	**P1D-6MRNB**
63	**P1D-6NRNB**
80	**P1D-6PRNB**
100	**P1D-6QRNB**
125	**P1D-6RRNB**

Grease



Standard	30g	**9127394541**

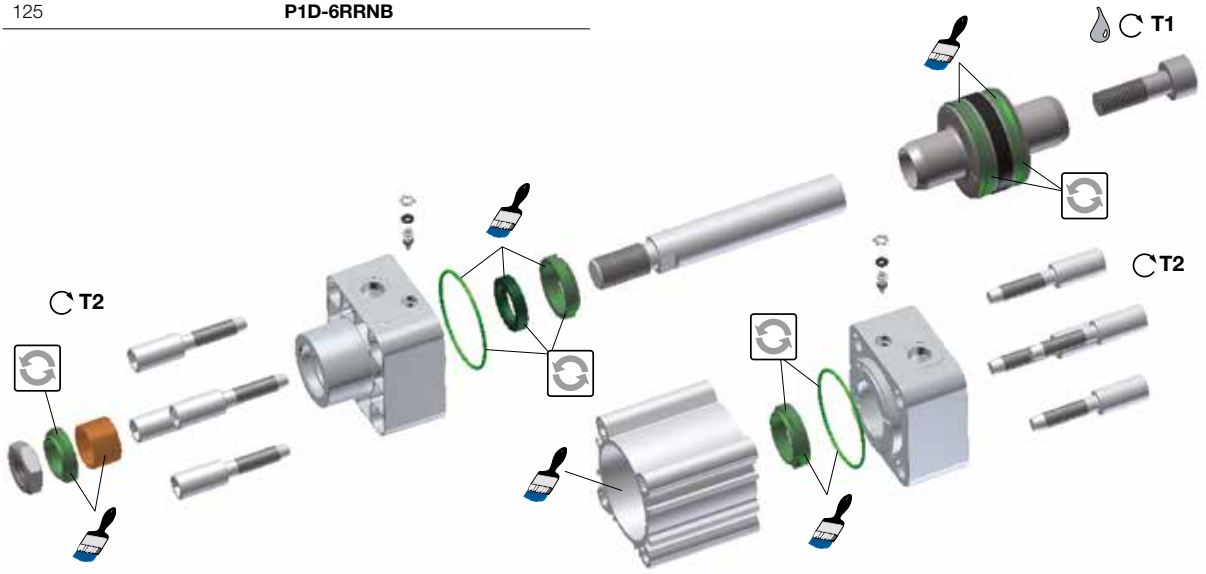

= Included in seal kit

= Socket head

= Tightening torque

= Lubricated with grease

= Locking fluid

Loctite 270 or Loctite 2701 locking fluid must be used

Bore mm	Plastic piston **T1** Nm	**NV** mm	**T2** Nm	**NV** mm
32	4,5	6	8	6
40	11	8	8	6
50	20	10	20	8
63	20	10	20	8
80	40	14	20	6
100	120	14	20	6
125	120	14	70	8

Parker Hannifin Corporation
Pneumatic Division - Europe

Tel: +45 63 12 83 00 | Email: ps@hymatik.com | www.hymatik.com | Hvidkaervej 27a, DK-5250 Odense SV, Denmark

P1D-X ISO Cylinders

- Complete seal kits consisting of:
- Piston seals
- Cushioning seals
- Piston rod seal
- O-rings
- Piston rod scraper seal



Cyl.bore mm	P1D cylinder version High temp.	Low temp.	Standard temp. Aluminium piston	Metal scraper	Hydraulic version
32	**P1D-6KRFX**	**P1D-6KRLX**	**P1D-6KRNB**	**P1D-6KRQX**	**P1D-6KRHX**
40	**P1D-6LRF**	**P1D-6LRL**	**P1D-6LRNB**	**P1D-6LRQX**	**P1D-6LRH**
50	**P1D-6MRFX**	**P1D-6MRLX**	**P1D-6MRNB**	**P1D-6MRQX**	**P1D-6MRHX**
63	**P1D-6NRF**	**P1D-6NRL**	**P1D-6NRNB**	**P1D-6NRQX**	**P1D-6NRH**
80	**P1D-6PRF**	**P1D-6PRL**	**P1D-6PRNB**	**P1D-6PRQX**	**P1D-6PRH**
100	**P1D-6QRF**	**P1D-6QRL**	**P1D-6QRNB**	**P1D-6QRQX**	**P1D-6QRH**
125	**P1D-6RRF**	**P1D-6RRL**	**P1D-6RRNB**	**P1D-6RRQX**	**P1D-6RRH**



Standard temperature	30g	**9127394541**
High temperature	30g	**9127394521**
Low temperature	30g	**9127394541**

Seal kits

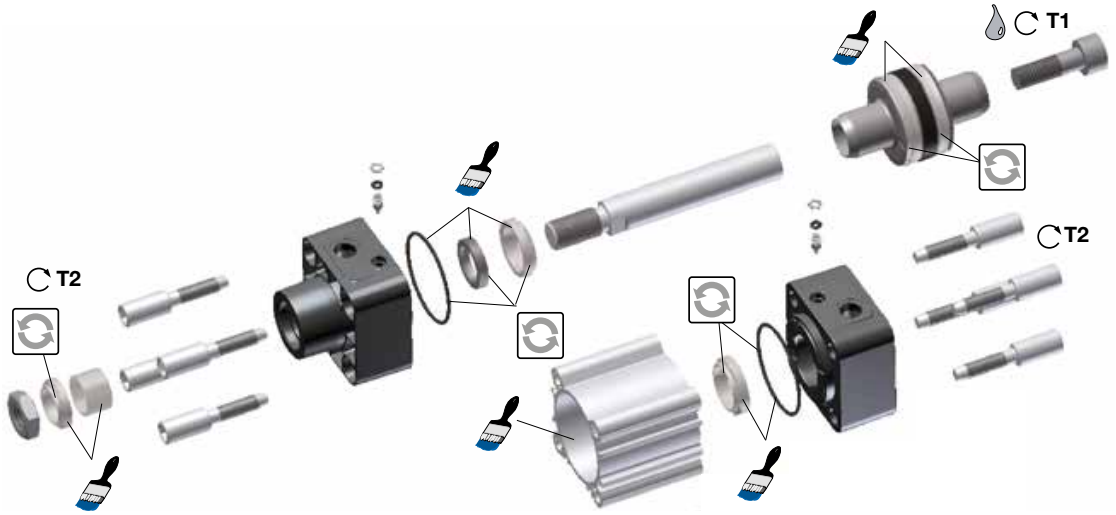

Cyl.-Dia.	Aluminium Piston T1	AF	T2	AF	NV	NV
mm	Nm	mm	Nm	mm	mm	mm
32	15	6	8	6	6	
40	30	8	8	6	6	
50	40	10	20	8	8	
63	40	10	20	8	8	
80	120	14	20	6		3x16
100	120	14	20	6		3x16
125	120	14	70	8		4x18

= Included in seal kit
= Socket head
= Tightening torque
Lubricated with grease
Locking fluid

Loctite 270 or Loctite 2701 locking fluid must be used

P1D-T ISO Cylinders

- Complete seal kits consisting of:
- Piston complete
- Cushioning seals
- Piston rod bearing
- Piston rod scraper seal
- Piston rod seal
- O-rings



Seal Kits

Cyl.bore mm	Standard	High Temp. Only for cylinders with PN P1D-Txxx/G...
160	**PD23013**	**P1D-6S/G90010**
200	**PD25006**	**P1D-6T/G90011**
250	**PD25872**	**P1D-6V/G90012**

Note: High temp seal kits for cylinders with PN P1D-TxxxMF-stroke are no longer available.

Grease



Standard	4g tube	**KL8220**
High temperature	4g tube	**KL8220**

P1D-T Optional cylinder versions

Cyl.bore mm	Through rod Standard temperature
160	**P1D-6SRNF**
200	**P1D-6TRNF**
250	**P1D-6VRNF**

Seal kits for bores Ø160 - Ø250 mm

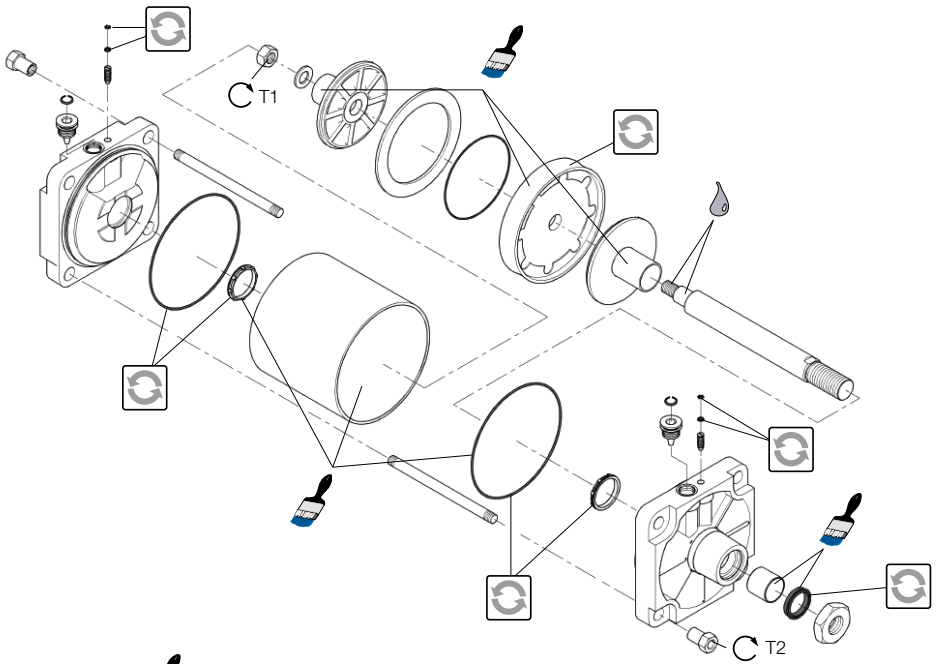

= Included in seal kit
= Lubricated with grease
= Socket head
= Locking fluid
= Tightening torque
= Nut A/F

Loctite LT638 locking fluid must be used

Cyl.-dia mm	Plastic piston **T1** Nm	**NV** mm	**T2** Nm	**NV** mm
160	100	30	85	27
200	100	30	95	27
250	120	36	140	41

Parker Hannifin Corporation
Pneumatic Division - Europe

Tel: +45 63 12 83 00 | Email: ps@hymatik.com | www.hymatik.com | Hvidkaervej 27a, DK-5250 Odense SV, Denmark

P1D-T ISO Cylinders

- Complete seal kits consisting of:
- Piston complete
- Cushioning seals
- Piston rod bearing
- Piston rod scraper seal
- Piston rod seal
- O-rings



Seal Kits

Cyl.bore mm	Standard	High Temp.
320	**KL7339**	**KL7340**

Grease



Standard	4g tube	**KL8220**
High temperature	4g tube	**KL8220**

P1D-T Optional cylinder versions

Cyl.bore mm	Through rod Standard temperature
320	**P1D-6WRNF**

Seal kits for bore Ø320 mm

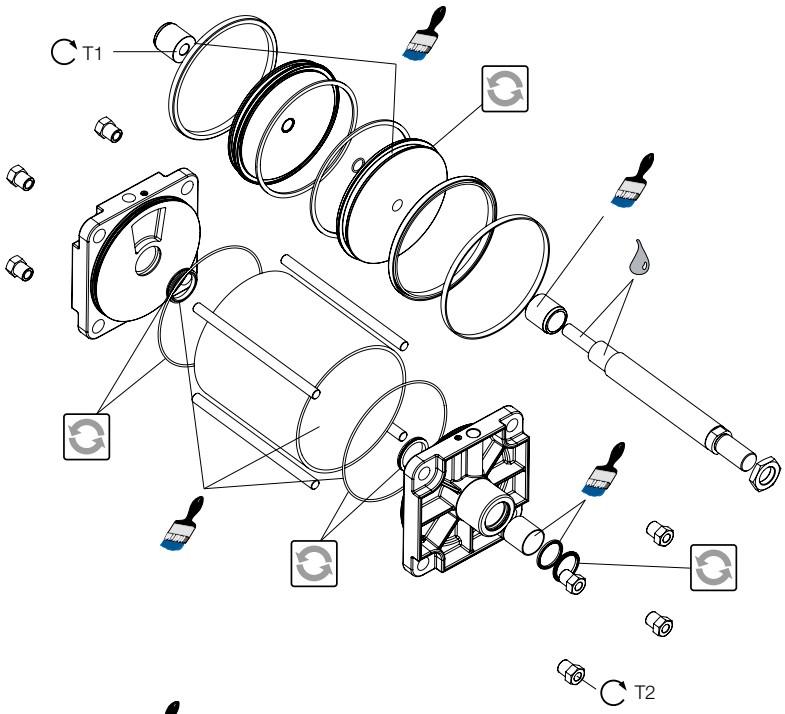

= Included in seal kit
= Lubricated with grease
= Socket head
= Locking fluid
= Tightening torque
= Nut A/F

Loctite LT638 locking fluid must be used

Bore	Piston			
	T1	**NV**	**T2**	**NV**
mm	Nm	mm	Nm	mm
320	250	30	200	41

P1E ISO Cylinders

Repair kits

= Included in repair kit

= Apply threadlocking adhesive to the grade stated below where symbol indicates (241 multi purpose locking and sealing).

= Lubricate with grease, see below.

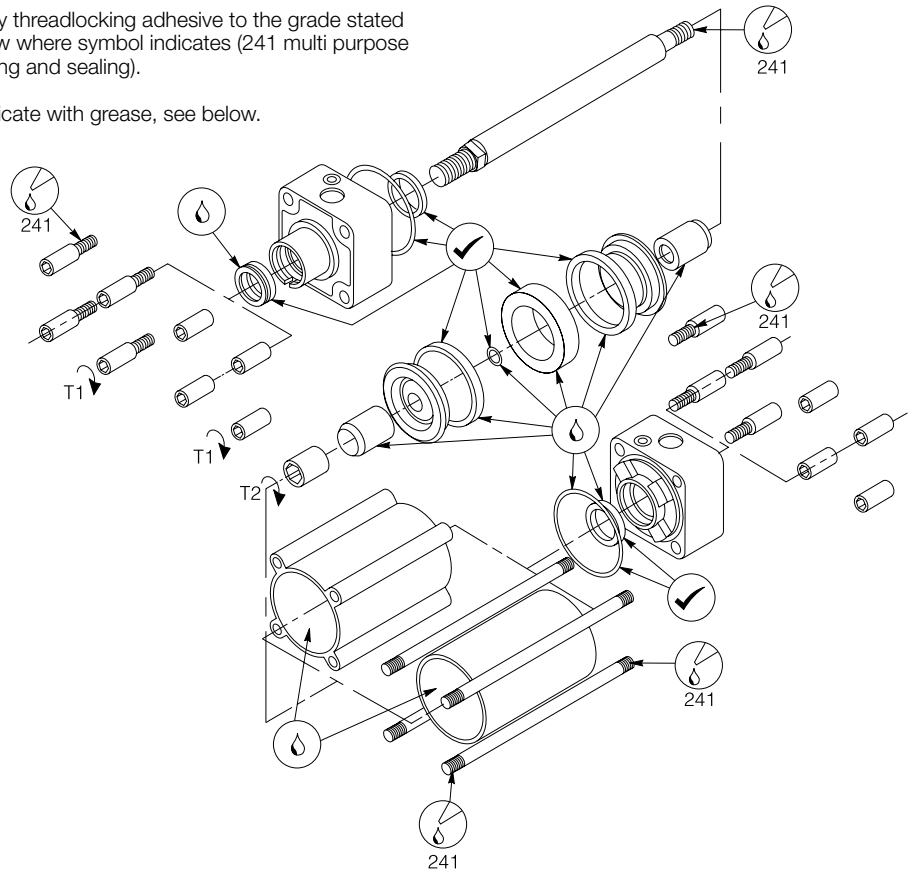

Bore mm	T1 Nm	NV	T2 Nm	NV
32	4-5	6	9-10	5
40	4-5	6	9-10	6
50	9-10	8	28-30	12
63	9-10	8	28-30	12
80	18-20	10	80-85	12
100	18-20	10	80-85	12
125	24-26	24	115-125	30
160	36-38	30	163-177	22
200	36-38	30	163-177	22

Seal kits		
Bore mm	Standard	High temperature
32	**P1E-6KRM**	**P1E-6KRV**
40	**P1E-6LRM**	**P1E-6LRV**
50	**P1E-6MRM**	**P1E-6MRV**
63	**P1E-6NRM**	**P1E-6NRV**
80	**P1E-6PRM**	**P1E-6PRV**
100	**P1E-6QRM**	**P1E-6QRV**
125	**P1E-6RRM**	**P1E-6RRV**
160	**P1E-6SRM**	**P1E-6SRV**
200	**P1E-6TRM**	**P1E-6TRV**

Grease



Standard	30g	**9127394541**
High temperature	30g	**9127394521**
Low temperature	30g	**9127394541**

Parker Hannifin Corporation
Pneumatic Division - Europe

Tel: +45 63 12 83 00 | Email: ps@hymatik.com | www.hymatik.com | Hvidkaervej 27a, DK-5250 Odense SV, Denmark

P1C Cylinders



Seal kits

- Complete seal kits consisting of:
- Scraper ring
- Piston rod bearing
- Piston rod seal
- Piston bearing
- Piston seals
- Cushioning rings
- O-rings

Bore mm	Standard	Option High Temp	Low Temp	Hydraulic
32	**9121715901**	**9121715931**	**9121715921**	**9121715961**
40	**9121715902**	**9121715932**	**9121715922**	**9121715962**
50	**9121715903**	**9121715933**	**9121715923**	**9121715963**
63	**9121715904**	**9121715934**	**9121715924**	**9121715964**
80	**9121715905**	**9121715935**	**9121715925**	**9121715965**
100	**9121715906**	**9121715936**	**9121715926**	**9121715966**
125	**9121715907**	**9121715937**	**9121715927**	**9121715967**

Bore mm	Thru Rod Standard	Rod Locking Standard
32	**9121715952**	**9121715941**
40	**9121715953**	**9121715942**
50	**9121715954**	**9121715943**
63	**9121715955**	**9121715944**
80	**9121715956**	**9121715945**
100	**9121715957**	**9121715946**
125	**9121715958**	**9121715947**

Grease



Standard	30 g	**9127394541**
High temperature	30 g	**9127394521**
Low temperature	30 g	**9127394531**

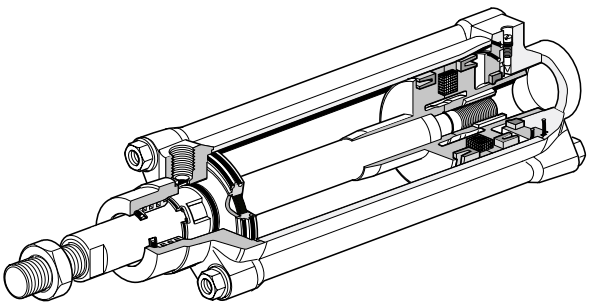

Tel: +45 63 12 83 00 | Email: ps@hymatik.com | www.hymatik.com | Hvidkaervej 27a, DK-5250 Odense SV, Denmark

C41 Cylinders



Seal kits

Bore mm	Standard	High temp	Hydraulic	Thru rod
32	**9121565201**	**9122298611**	**9123981801**	**9121565251**
40	**9121565202**	**9122298612**	**9123981802**	**9121565252**
50	**9121565203**	**9122298613**	**9123981803**	**9121565253**
63	**9121565204**	**9122298614**	**9123981804**	**9121565254**
80	**9121565205**	**9122298615**	**9123981805**	**9121565255**
100	**9121565206**	**9122298616**	**9123981806**	**9121565256**
125	**9121565207**	**9122298617**	**9123981807**	**9121565257**
160	**9121565208**	**9122298618**		**9121565258**
200	**9121565209**	**9122298619**		**9121565259**

The seal kit you should use depends on the letter used for “Piston rod and sealing material” in the cylinder ordering key, this is digit number 10 in the standard ordering key or position 6 in the special version ordering key. Seal kit for through rod locking is for standard temperature only and should be used when you have a cylinder with through rod (F in position 9 for standard ordering key or position 5 in special ordering key).

Example		
Standard ordering key	**C41-S032MC-0200**	(position 10)
Order key, special versions	**41CKMC200C15000**	(position 6)

Letter	Seal Kit
Position 10	
S, C, M or R	Standard
F, G, N or D	High temp
L, K, P or E	Low temp
J or Z	Hydraulic
Position 9 when position 10 S, C, M or R	
F	Thru rod

P1K Cylinders



Seal kits

Bore mm	Standard	Option High Temp.	Low Temp.	Hydraulic
32	**9122352088**	**9122421921**	**P1K-6032PL**	**9122421931**
40	**9122352089**	**9122421922**	**P1K-6040PL**	**9122421932**
50	**9122352090**	**9122421923**	**P1K-6050PL**	**9122421933**
63	**9122352091**	**9122421924**	**P1K-6063PL**	**9122421934**
80	**9122352092**	**9122421925**	**P1K-6080PL**	**9122421935**
100	**9122352093**	**9122421926**	**P1K-6100PL**	**9122421936**
125	**9122352100**	**-**	**-**	**9122421937**

* Please contact customer service.

Grease



Standard	30g	**9127394541**
High temperature	30g	**9127394521**
Low temperature	30g	**9127394541**

Parker Hannifin Corporation
Pneumatic Division - Europe

Tel: +45 63 12 83 00 | Email: ps@hymatik.com | www.hymatik.com | Hvidkaervej 27a, DK-5250 Odense SV, Denmark

P1S Cylinders



Seal kits

- Complete seal kits consisting of:
- Piston seals
- Cushioning seals
- Piston rod bearing
- Piston rod seal
- Scraper ring
- O-rings

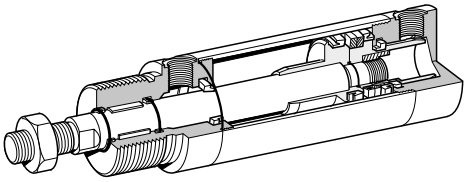

Standard temperature versions

Bore mm	Cylinder designation	Order code
32	P1S-•032MS	**9121659195**
40	P1S-•040MS	**9121659196**
50	P1S-•050MS	**9121659197**
63	P1S-•063MS	**9121659198**
80	P1S-•080MS	**9121718905**
100	P1S-•100MS	**9121718906**
125	P1S-•125MS	**9121718907**

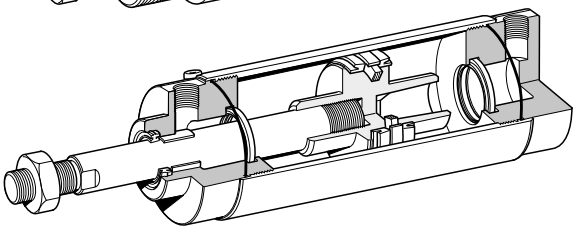

High temperature versions

Bore mm	Cylinder designation	Order code
32	P1S-•032MF	**9121720595**
40	P1S-•040MF	**9121720596**
50	P1S-•050MF	**9121720597**
63	P1S-•063MF	**9121720598**
80	P1S-•080MF	**9121718925**
100	P1S-•100MF	**9121718926**
125	P1S-•125MF	**9121718927**

Low temperature versions

Bore mm	Cylinder designation	Order code
80	P1S-•080ML	**9121718935**
100	P1S-•100ML	**9121718936**
125	P1S-•125ML	**9121718937**

Standard temperature with Through rod

Bore mm	Cylinder designation	Order code
80	P1S-•080FS	**9121718955**
100	P1S-•100FS	**9121718956**
125	P1S-•125FS	**9121718957**

Standard temperature with stainless steel scraper ring

Bore mm	Cylinder designation	Order code
80	P1S-•080MQ	**9121718915**
100	P1S-•100MQ	**9121718916**
125	P1S-•125MQ	**9121718917**



Grease

Version	Weight	Order code
Standard and Low temperature	30 g	**9127394541**
High temperature	30 g	**9127394521**

Tel: +45 63 12 83 00 | Email: ps@hymatik.com | www.hymatik.com | Hvidkaervej 27a, DK-5250 Odense SV, Denmark

P1M Cylinders

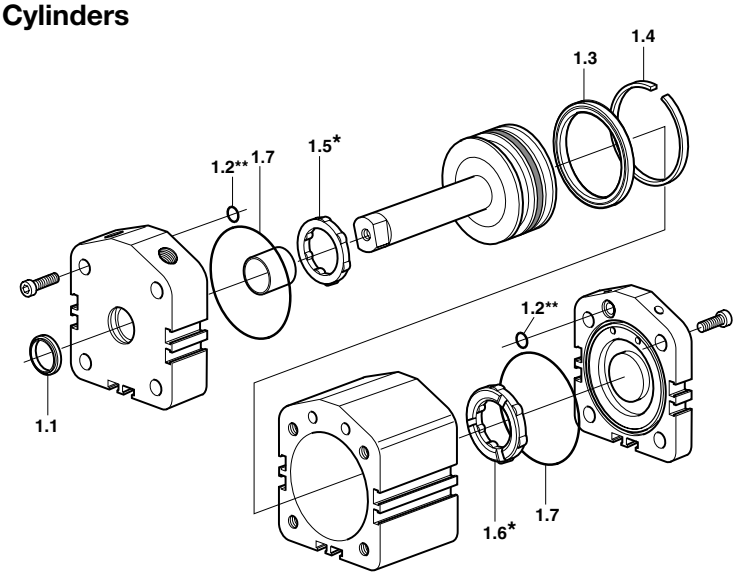



Seal kits

No	Qty	Part
1.1	1	Scraper ring/Piston rod seal
1.2	2	O-ring
1.3	1	Piston seals
1.4	1	Piston bearing
1.5	1	Front end bumper
1.6	1	Rear end bumper
1.7	2	O-ring

* Bumpers 1.5 and 1.6 not valid for high-temperature version, type G.

** Quantity and design vary, depending on the cylinder variant and model.

Seal kits

Bore	Option	
mm	Standard	High Temp
12	**Obsolete**	**Obsolete**
16	**Obsolete**	**Obsolete**
20	**P1M-6HRN**	**Obsolete**
25	**P1M-6JRN**	**Obsolete**
32	**P1M-6KRN**	**Obsolete**
40	**P1M-6LRN**	**Obsolete**
50	**P1M-6MRN**	**Obsolete**
63	**P1M-6NRN**	**Obsolete**
80	**P1M-6PRN**	**Obsolete**
100	**P1M-6QRN**	**Obsolete**

Grease

Weight	Option	
g	Standard	High Temp
30	**9127394541**	**9127394521**

C0D - C0P Cylinders

Seal kits

Description	Order code
C0D300-40/-40S	**9121655401**
C0D600-50/-50S	**9121655501**
C0D1200-50/-50S	**9121655601**
C0P160-50S/-80S	**9121655101**
C0P300-50S/-80S	**9121655201**
C0P2500-60/-80	**9121655301**
C0P2500-60S/-100S	**9121655302**

Grease

Weight	Order code
30 g	**9127394541**



Tel: +45 63 12 83 00 | Email: ps@hymatik.com | www.hymatik.com | Hvidkaervej 27a, DK-5250 Odense SV, Denmark

P1P Compact ISO Cylinders



Complete seal kits consist of:

- Piston (complete)
- Piston rod seal
- O rings

Seal kits

Bore mm	P1P cylinder version		
	Std temp	High temp	Low temp
20	**P1P-6HRN**	**P1P-6HRF**	**P1P-6HRL**
25	**P1P-6JRN**	**P1P-6JRF**	**P1P-6JRL**
32	**P1P-6KRN**	**P1P-6KRF**	**P1P-6KRL**
40	**P1P-6LRN**	**P1P-6LRF**	**P1P-6LRL**
50	**P1P-6MRN**	**P1P-6MRF**	**P1P-6MRL**
63	**P1P-6NRN**	**P1P-6NRF**	**P1P-6NRL**
80	**P1P-6PRN**	**P1P-6PRF**	**P1P-6PRL**
100	**P1P-6QRN**	**P1P-6QRF**	**P1P-6QRL**

Grease



Standard temperature	30g	**9127394541**
High temperature	30g	**9127394521**
Low temperature	30g	**9127394541**

For through rods variants, order two seal kits.

Example: For a P1PS...KS Ø63 through rod, standard temperature version, order 2 x **P1P-6NRN**

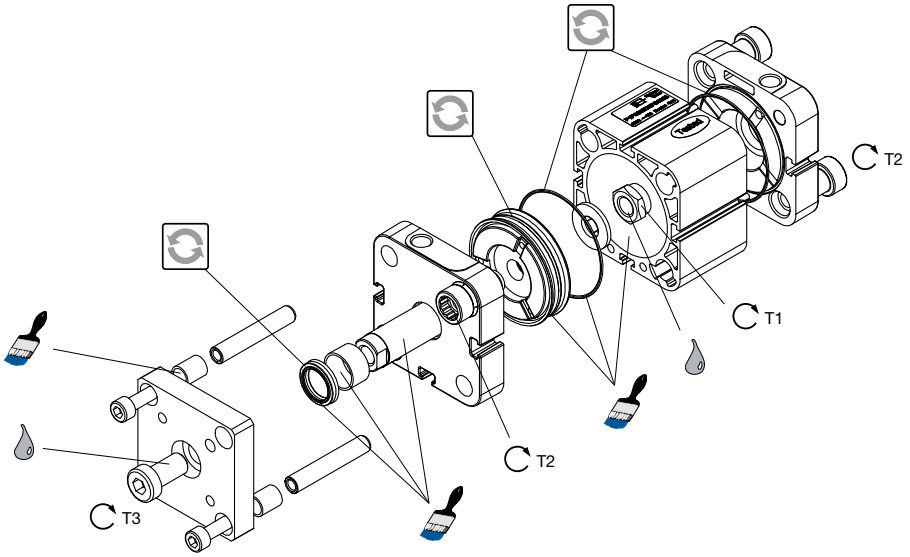

= Included in seal kit

= Lubricated with grease

= Socket head

= Locking fluid

= Tightening torque

Loctite 243 must be used for standard and low temperature versions.
Loctite 270 must be used for high temperature versions

Bore mm	Plastic piston T1 Nm	AF mm	T2 Nm	AF mm	T3 Nm	AF mm
20	3,5	8	14	7	8	4
25	3,5	8	14	7	8	4
32	8	10	20	7	20	5
40	12	13	20	7	20	5
50	20	17	40	10	40	7
63	20	17	40	10	40	7
80	35	19	14	5	70	8
100	80	24	28	6	70	8

Parker Hannifin Corporation
Pneumatic Division - Europe

Tel: +45 63 12 83 00 | Email: ps@hymatik.com | www.hymatik.com | Hvidkaervej 27a, DK-5250 Odense SV, Denmark

NZ Cylinders Ø12 - Ø25



Seal Kits

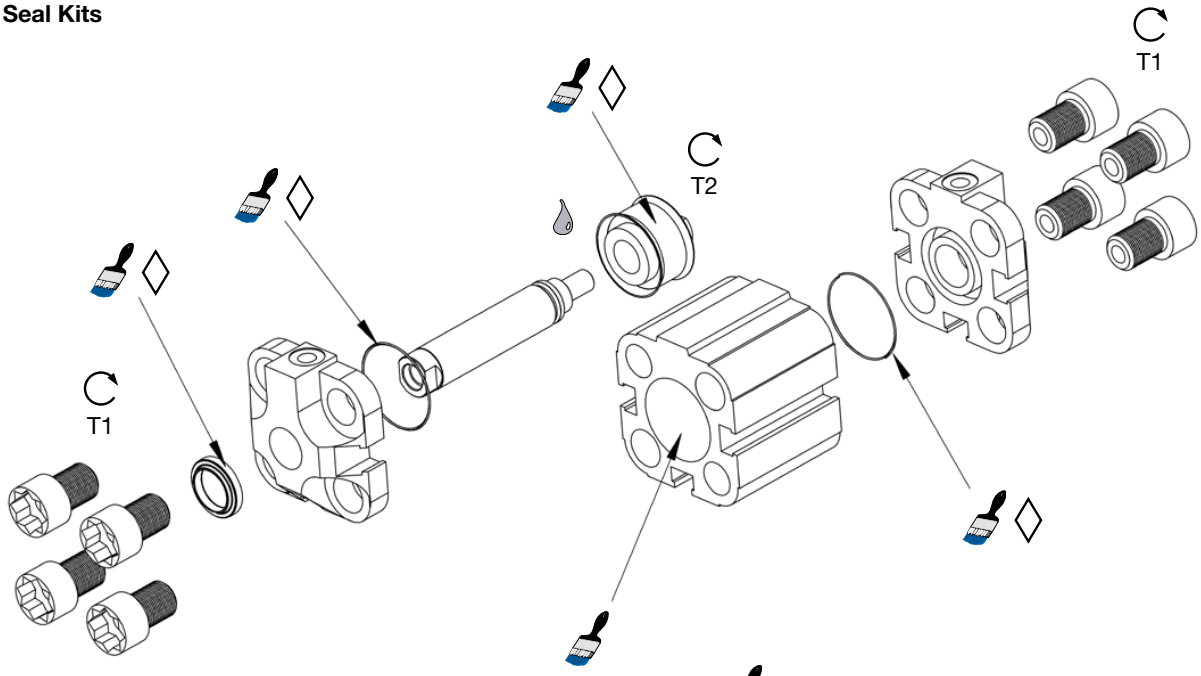

= Grease: Standard 4 gr. KL8220

= Locking fluid: Loctite 638

= Included in seal kit

Cyl. Ø	T1		T2	
12	10 Nm	6	3 Nm	5
16	10 Nm	6	3 Nm	7
20	12 Nm	8	5,5 Nm	8
25	12 Nm	8	5,5 Nm	8

Seal kit order codes

Cyl. Ø	Standard NZ
32	**PD48301**
40	**PD48302**
50	**PD48303**
63	**PD48304**

Parker Hannifin Corporation
Pneumatic Division - Europe

Tel: +45 63 12 83 00 | Email: ps@hymatik.com | www.hymatik.com | Hvidkaervej 27a, DK-5250 Odense SV, Denmark

NZ Cylinders Ø32 - Ø100



Seal Kits

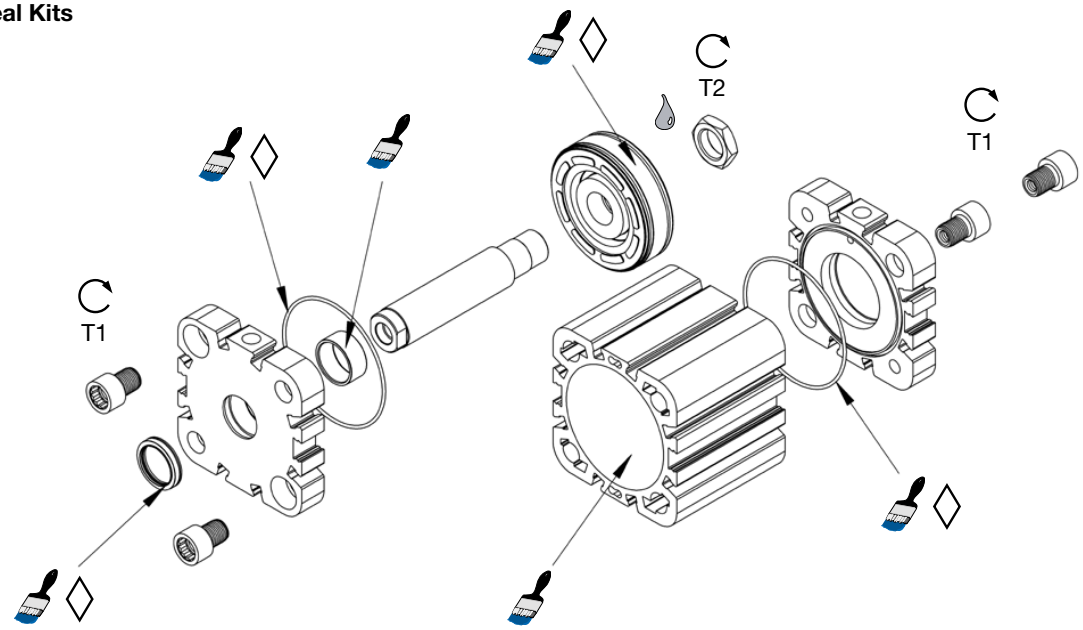

= Grease: Standard 4 gr. KL8220

= Locking fluid: Loctite 638

= Included in seal kit

Cyl. Ø	T1		T2	
32	13 ± 1 Nm	10	10 ± 2 Nm	13
40	13 ± 1 Nm	10	10 ± 2 Nm	17
50	22 ± 1 Nm	10	10 ± 2 Nm	19
63	22 ± 1 Nm	10	10 ± 2 Nm	24
80	15 ± 1 Nm	5	10 ± 2 Nm	24
100	15 ± 1 Nm	5	10 ± 2 Nm	24

Seal kit order codes

Cyl. Ø	Standard NZ / NZD	High temp. NZ / NZD
32	**PD41478 / PD42095**	**PD49113 / PD49119**
40	**PD41479 / PD42096**	**PD49114 / PD49120**
50	**PD41480 / PD42097**	**PD49115 / PD49121**
63	**PD41481 / PD42098**	**PD49116 / PD49122**
80	**PD41482 / PD42099**	**PD49117 / PD49123**
100	**PD41483 / PD42100**	**PD49118 / PD49124**

Parker Hannifin Corporation
Pneumatic Division - Europe

Tel: +45 63 12 83 00 | Email: ps@hymatik.com | www.hymatik.com | Hvidkaervej 27a, DK-5250 Odense SV, Denmark

SZ Cylinders



Seal Kits

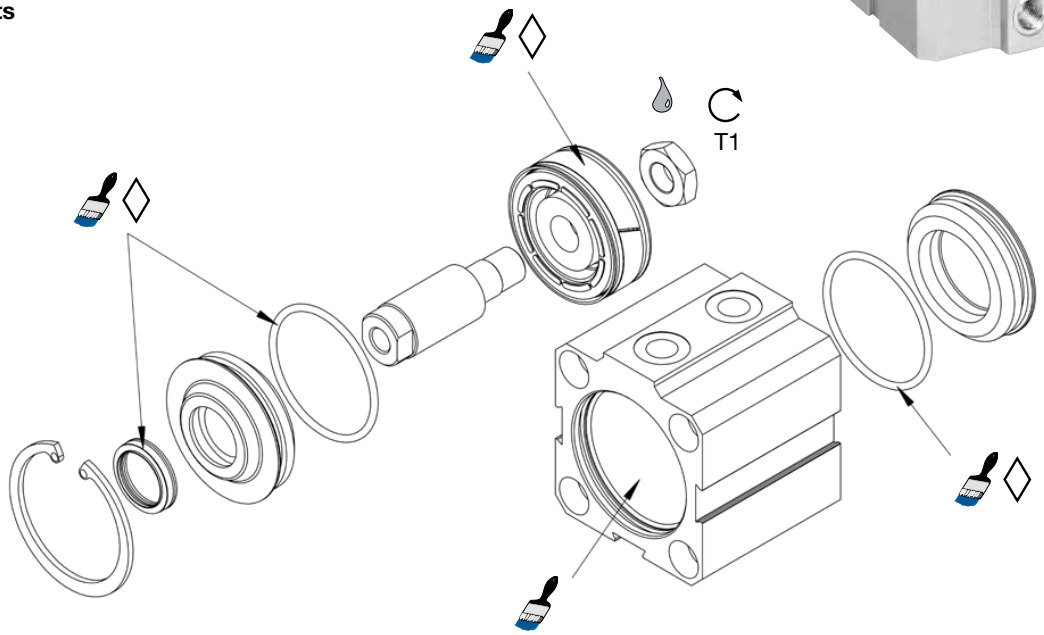

= Grease: Standard 4 gr. KL8220

= Locking fluid: Loctite 638

= Included in seal kit

Cyl. Ø	T1	⬡
12	7,5 ± 1 Nm	-
16	7,5 ± 1 Nm	6
20	10 ± 2 Nm	8
25	10 ± 2 Nm	10
32	10 ± 2 Nm	13
40	10 ± 2 Nm	16
50	10 ± 2 Nm	18
63	10 ± 2 Nm	24
80	10 ± 2 Nm	24
100	10 ± 2 Nm	24

Seal kit order codes

Cyl. Ø	SZ / SZV	SZD
12	**PD35419**	**-**
16	**PD35420**	**-**
20	**PD35421**	**-**
25	**PD35422**	**-**
32	**PD43996**	**PD44008**
40	**PD43997**	**PD44009**
50	**PD43998**	**PD44010**
63	**PD43999**	**PD44011**
80	**PD44000**	**PD44012**
100	**PD44001**	**PD44013**

Tel: +45 63 12 83 00 | Email: ps@hymatik.com | www.hymatik.com | Hvidkaervej 27a, DK-5250 Odense SV, Denmark

B Series

Bore size (mm)	**Order code** Standard temperature
32	**6360075**
40	**6360085**
50	**6360115**
63	**Obsolete**



MB / SB Series

Bore size (mm)	**Order code** Standard temperature	**Order code** High temperature (AV)
19	**6360020**	**Obsolete**
25	**6360040**	**Obsolete**

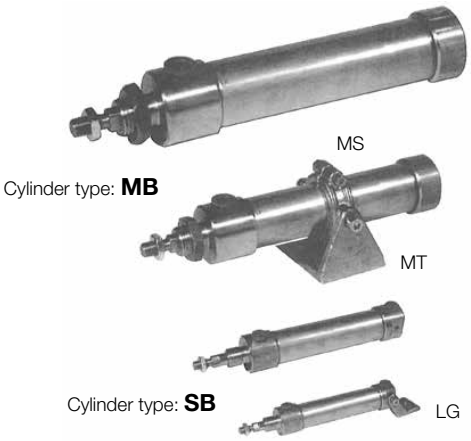

C Series

Bore size (mm)	**Order code** Standard temperature	**Order code** Oversized Piston (VK)	**Order code** High temperature (AV)
125	**6360200**	**6360202**	**6360204**
150	**6360220**	**6360222**	**6360224**
200	**6360240**	**6360242**	**N/A**
250	**6360250**	**6360252**	**N/A**
300	**6360280**	**Obsolete**	**N/A**

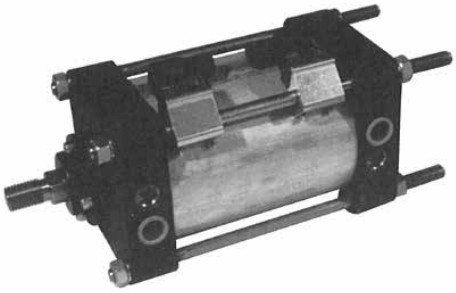

A / PA Series

Bore size (mm)	**Order code** Standard temperature	**Order code** High temperature (AV)
32	**2209001**	**6360074**
40	**2209004**	**Obsolete**
50	**2209007**	**6360114**
63	**2209010**	**6360134**
80	**2209013**	**6360174**
100	**2209016**	**6360194**

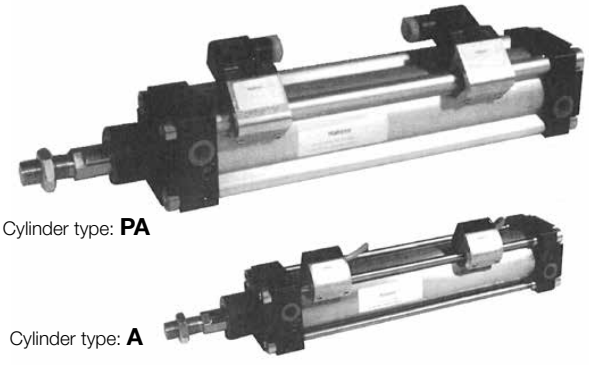

Tel: +45 63 12 83 00 | Email: ps@hymatik.com | www.hymatik.com | Hvidkaervej 27a, DK-5250 Odense SV, Denmark

PX CNOMO Cylinders

Seals kits

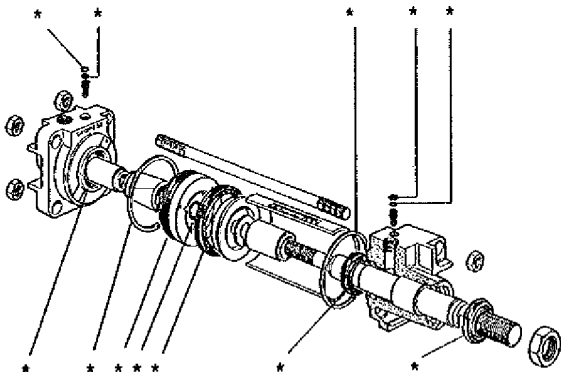



Components marked (*) are part of the bellow repair kits

Ø mm	Standard temperature range
25	**JJ025A02**
32	**JJ032A02**
40	**JJ040A02**
50	**JJ050A02**
63	**JJ063A02**
80	**JJ080A02**
100	**JJ100A02**
125	**JJ125A02**

Assembly nutted stud and mountings tightening torque (Nm)

Ø mm	Std. body Stroke	Std. body Torque	Steel body Stroke	Steel body Torque	Epoxy body Stroke	Epoxy body Torque
25	0-800	5	801-1200	2		
32	0-900	5	901-2000	2	0-400	2,5
40	0-1100	5	1101-2000	3	0-600	3,5
50	0-1200	10	1201-2000	6	0-700	6,0
63	0-1200	12	1201-2000	8	0-700	9,0
80	0-1400	20	1401-2000	14	0-700	12,0
100	0-1400	24	1401-2000	20	0-900	13,0
125	0-1500	35	1501-2000	30	0-1000	17,0

Note: Nutted studs and mounting nuts should be progressively tightened diagonally opposite until indicated torque values are reached

VR Torque Units

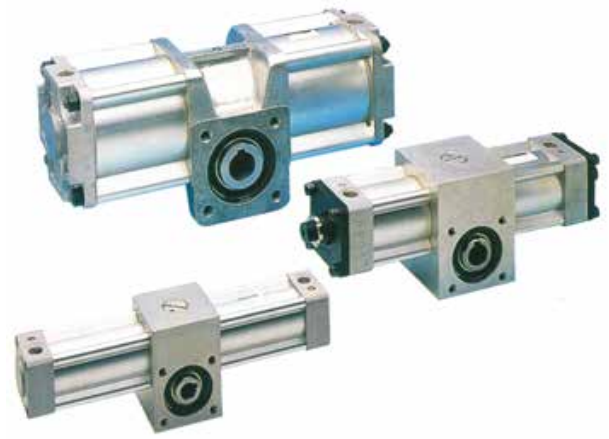

Seal kits

Ø bore (mm)	VRS / VRSM Cylinders	VRA / VRAM Cylinders
32	**JJVR032**	**JJVRA032**
40	**JJVR040**	**JJVRA040**
50	**JJVR050**	**JJVRA050**
63	**JJVR063**	**JJVRA063**
80	**JJVR080**	**JJVRA080**
100	**JJVR100**	
125	**JJVR125**	

Parker Hannifin Corporation
Pneumatic Division - Europe

Tel: +45 63 12 83 00 | Email: ps@hymatik.com | www.hymatik.com | Hvidkaervej 27a, DK-5250 Odense SV, Denmark

RDV Cylinders - Ø25



Seal Kit

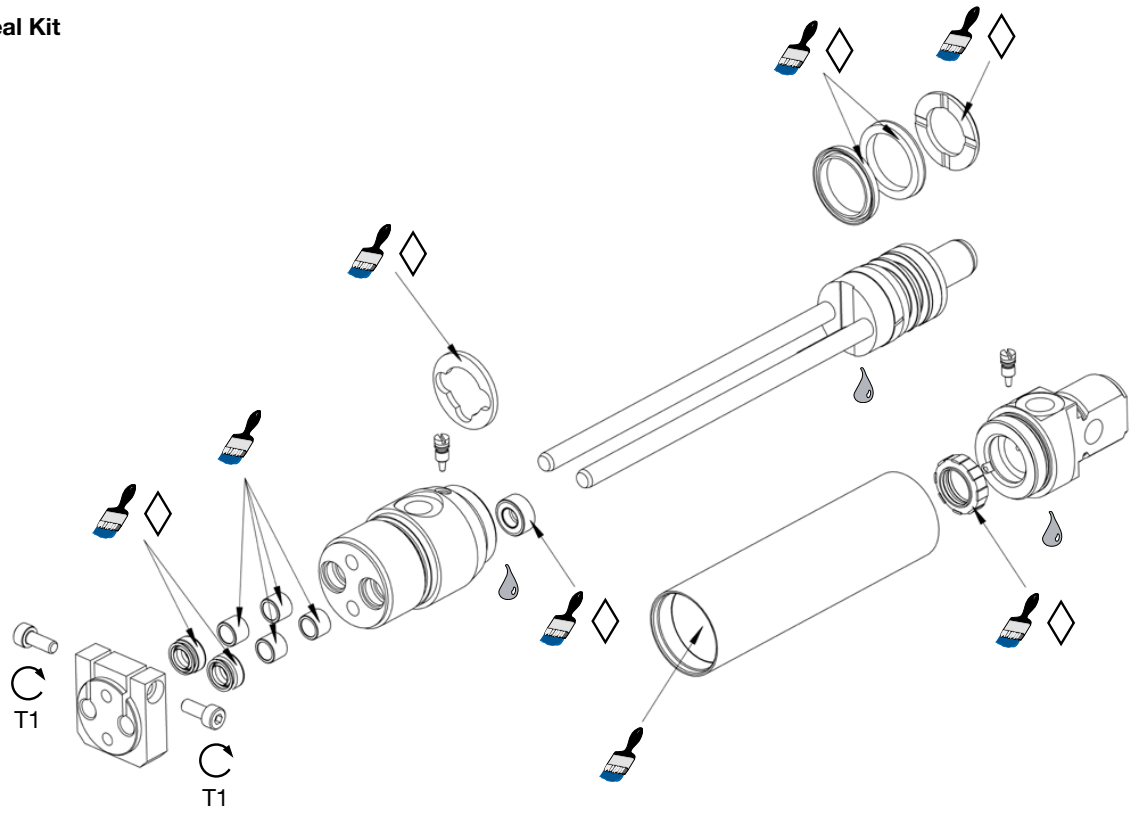

= Grease: Standard 4 gr. KL8220

= Locking fluid: Loctite 638

= Included in seal kit

T1	
3 - 4 Nm	3

Seal kit order code

PD29168

AZ Cylinders

Only for cylinders with item numbers beginning A
e.g. A15L0025/000AAAAA000A0000



Seal Kits

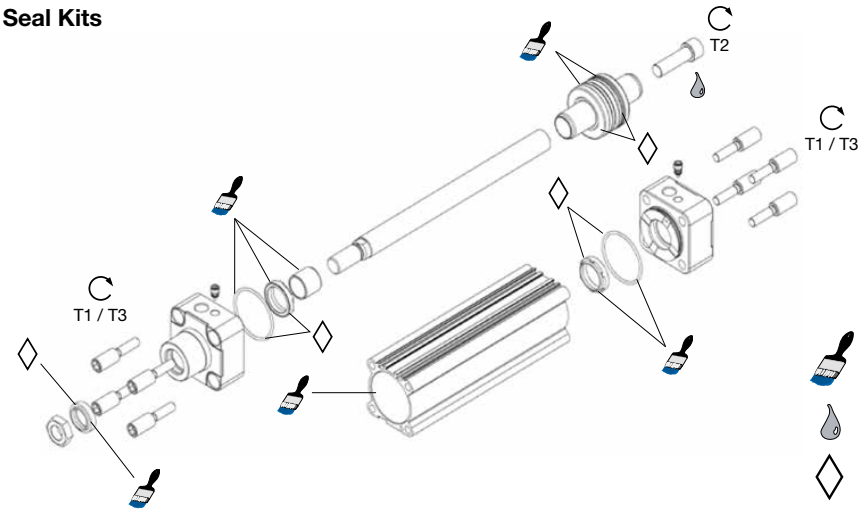

= Grease: Standard 4 gr. KL8220

= Locking fluid: Loctite 638

= Included in seal kit

Seal kit order codes

Cyl. Ø	AZ5000 / AZD5000 / AZZ5000		AZ...A	AZ...AD	AZ...AH	AZ...AHD
	Standard	Viton	with metal scraper	with metal scraper and through rod	with metal scraper, hydraulic version	with metal scraper, hydraulic version and through rod
32	**KL7222**	**KL7223**	**PD49101**	**PD49102**	**PD49089**	**PD49090**
40	**KL7224**	**KL7225**	**PD49103**	**PD49104**	**PD49091**	**PD49092**
50	**KL7226**	**KL7227**	**PD49105**	**PD49106**	**PD49093**	**PD49094**
63	**KL7228**	**KL7229**	**PD49107**	**PD49108**	**PD49095**	**PD49096**
80	**KL7230**	**KL7231**	**PD49109**	**PD49111**	**PD49097**	**PD49098**
100	**KL7232**	**KL7233**	**PD49111**	**PD49112**	**PD49099**	**PD49100**

ISO Cylinder

Cyl. Ø	**T1** ↻	⬡	**T2** ↻	⬡	**T3** ↻	⬡
32	10 - 12 Nm	6	5 - 6 Nm	5	4 - 5 Nm	6
40	10 - 12 Nm	6	12 - 14 Nm	6	4 - 5 Nm	6
50	16 - 20 Nm	8	16 - 18 Nm	10	9 - 10 Nm	8
63	16 - 20 Nm	8	16 - 18 Nm	10	9 - 10 Nm	8
80	26 - 32 Nm	10	20 - 23 Nm	12	18 - 20 Nm	10
100	26 - 32 Nm	10	20 - 23 Nm	12	18 - 20 Nm	10

T3 ↻ = torque tie rod cylinder

⬡ = across flats tie rod cylinder

AZ Cylinders

Only for cylinders with item numbers beginning PA
e.g. PA61240-0125



Seal Kits

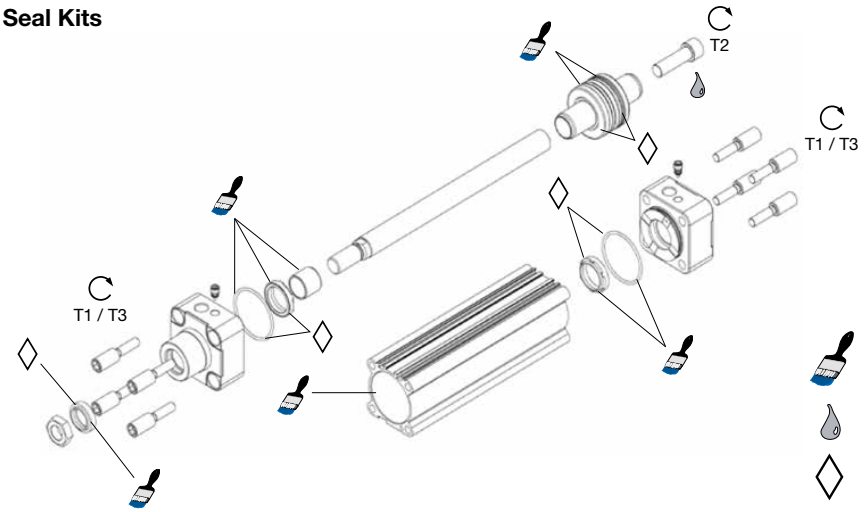

= Grease: Standard 4 gr. KL8220
= Locking fluid: Loctite 638
= Included in seal kit

Seal kit order codes

Cyl. Ø	AZ5000 / AZD5000 / AZZ6000 Standard	AZ1000 Viton	AZ...A with metal scraper	AZ...D with through rod	AZ...H hydraulic version
32	**PD39169**	**PD39499**	**PD41012**	**PD39381**	**PD39505**
40	**PD39170**	**PD39500**	**PD41013**	**PD39382**	**PD39506**
50	**PD39171**	**PD39501**	**PD41014**	**PD39383**	**PD39507**
63	**PD39172**	**PD39502**	**PD41015**	**PD39384**	**PD39508**
80	**PD39173**	**PD39503**	**PD41016**	**PD39385**	**PD39509**
100	**PD39174**	**PD39504**	**PD41017**	**PD39386**	**PD39510**

ISO Cylinder

Cyl. Ø	T1		T2		T3	
32	10 - 12 Nm	6	5 - 6 Nm	5	4 - 5 Nm	6
40	10 - 12 Nm	6	12 - 14 Nm	6	4 - 5 Nm	6
50	16 - 20 Nm	8	16 - 18 Nm	10	9 - 10 Nm	8
63	16 - 20 Nm	8	16 - 18 Nm	10	9 - 10 Nm	8
80	26 - 32 Nm	10	20 - 23 Nm	12	18 - 20 Nm	10
100	26 - 32 Nm	10	20 - 23 Nm	12	18 - 20 Nm	10

T3 = torque tie rod cylinder
= across flats tie rod cylinder

Tel: +45 63 12 83 00 | Email: ps@hymatik.com | www.hymatik.com | Hvidkaervej 27a, DK-5250 Odense SV, Denmark

AZV Cylinders



Seal Kits

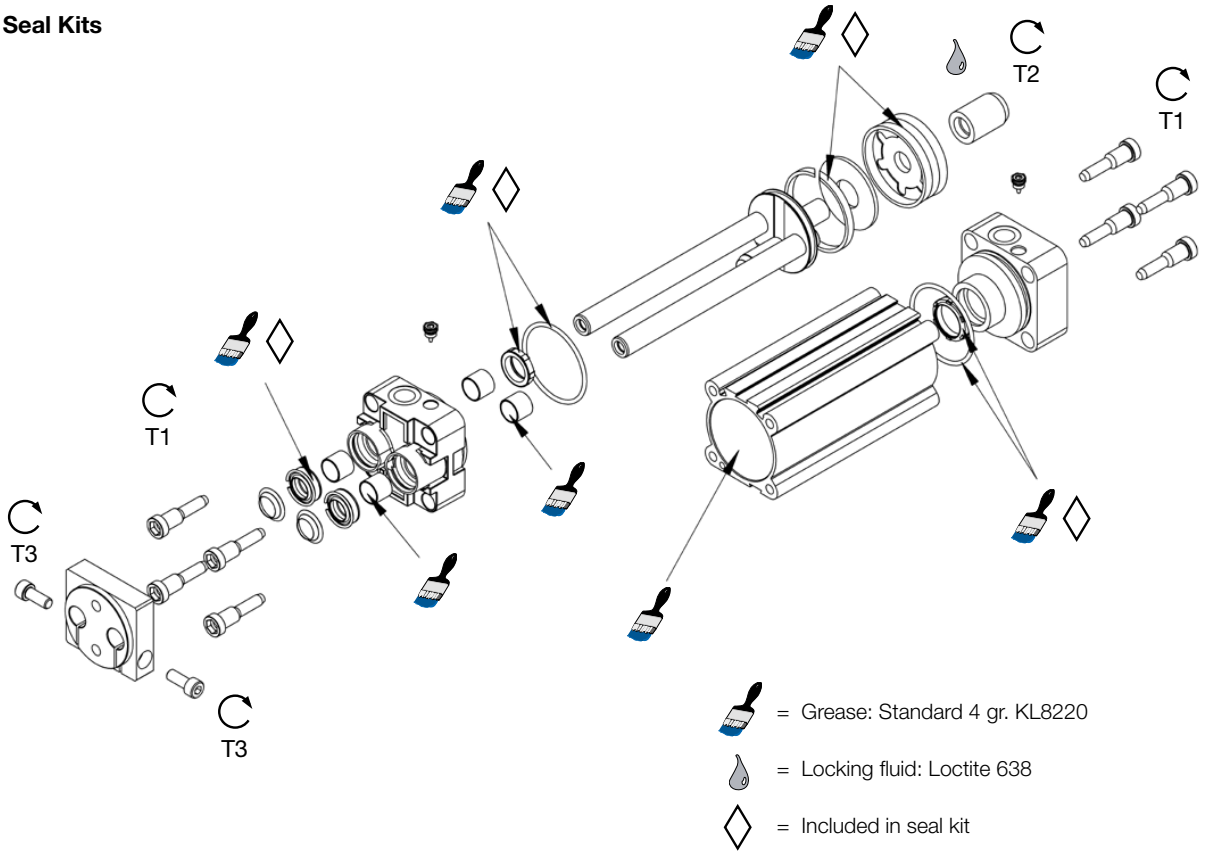

ISO Cylinder

Cyl. Ø	T1		T2		T3	
32	10 - 12 Nm	6	5 - 6 Nm	5	5,5 ± 0,8 Nm	4
40	10 - 12 Nm	6	12 - 14 Nm	6	5,5 ± 0,8 Nm	4
50	16 - 20 Nm	8	16 - 18 Nm	10	10 ± 1,5 Nm	5
63	16 - 20 Nm	8	16 - 18 Nm	10	20 ± 3 Nm	6
80	26 - 32 Nm	10	20 - 23 Nm	12	20 ± 3 Nm	6
100	26 - 32 Nm	10	20 - 23 Nm	12	20 ± 3 Nm	6

Seal kit order codes

Cyl. Ø	Standard	Viton
32	**PD23003**	**PD25555**
40	**PD23004**	**PD25556**
50	**PD23005**	**PD25557**
63	**PD23006**	**PD25558**
80	**PD23007**	**PD25031**
100	**PD23008**	**PD25030**

Tel: +45 63 12 83 00 | Email: ps@hymatik.com | www.hymatik.com | Hvidkaervej 27a, DK-5250 Odense SV, Denmark

CT/C2T Cylinders



Seal kits

Ø bore (mm)	Standard temperature	High temperature	Standard temperature through rod	High temperature through rod
32	**CTSK032**	**CTSK032V**	**CTSK032 + CTSKF032**	**N/A**
40	**CTSK040**	**N/A**	**N/A**	**N/A**
50	**CTSK050**	**N/A**	**N/A**	**N/A**
63	**CTSK063**	**CTSK063V**	**N/A**	**N/A**
80	**CTSK080**	**CTSK080V**	**N/A**	**N/A**
100	**CTSK100**	**CTSK100V**	**N/A**	**N/A**

1” Brass Cylinders



Seal kits

Kits are available for all cylinder sizes, comprising a complete set of seals. To order specify part number shown in chart.

Cylinder Number	**Order code**
40400	**40400R**
40410	**40400R**
41400	**41400R**
41410	**41400R**
491	**491R**
492	**491R**
40900	**40900R**
41910	**40900R**
41000	**41000R**

P1Z Rodless Magnetic Cylinders



Seal kits

Bore mm	Basic version	Guided version
16	**P1ZM016SNN-R**	**P1ZM016GNN-R**
20	**P1ZM020SNN-R**	**P1ZM020GNN-R**
32	**P1ZM032SNN-R**	**P1ZM032GNN-R**

RA Rotary Actuators



Seal kits

Description	**Order code**
Mounting plate for VGD15 seal kit / spare kits:	**9127 386401**
RA-2-SS	**9121 679920**
RA-4-SS	**9121 679921**
RA-8-SS	**9121 679922**
RA-12-SS	**9121 679923**
RA-20-SS	**9121 679924**

Hydrochecks



Maintenance kits

Description	Order code
Repair kit for B181-1 or B181-2	**B732-504**
Repair kit for B181-5 or B181-6	**B732-505**
Repair kit for F3 Hydrocheck	**JJF3**

VB Hydraulic Clamp Cylinders



Seal kits

Unit type	Order code
VB Ø36	**JJVB36**
VB Ø48	**JJVB48**
VBH Ø48	**JJVBH48**
VB Ø60	**JJVB60**
VBH Ø60	**JJVBH60**

CH Series



Description	Order code
Repair Kit	**CH20R**
Repair Kit	**CH25R**
Repair Kit	**CH32R**
Repair Kit	**CH40R**
Repair Kit	**CH50R**
Repair Kit	**CH63R**
Repair Kit	**CH80R**

Tel: +45 63 12 83 00 | Email: ps@hymatik.com | www.hymatik.com | Hvidkaervej 27a, DK-5250 Odense SV, Denmark

P5GC Grippers



Maintenance kits

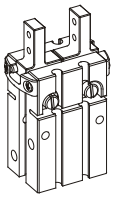

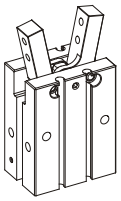

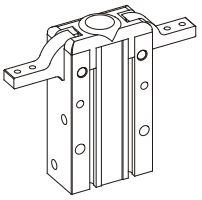

Size	Parallel gripper	Angular gripper	Radial gripper
10	**Obsolete**	**Obsolete**	**Obsolete**
16	**Obsolete**	**Obsolete**	**Obsolete**
20	**Obsolete**	**Obsolete**	**Obsolete**
25	**Obsolete**	**Obsolete**	**Obsolete**

The kit contains seals.

Spare parts

Size	Parallel gripper	Angular gripper	Radial gripper
10	**Obsolete**	**Obsolete**	**Obsolete**
16	**Obsolete**	**Obsolete**	**Obsolete**
20	**Obsolete**	**Obsolete**	**Obsolete**
25	**Obsolete**	**Obsolete**	**Obsolete**

The kit contains the levers and their spindles.

Jaw-carriers

Size	Parallel gripper	Angular gripper	Radial gripper
10	**Obsolete**	**Obsolete**	**Obsolete**
16	**Obsolete**	**Obsolete**	**Obsolete**
20	**Obsolete**	**Obsolete**	**Obsolete**
25	**Obsolete**	**Obsolete**	**Obsolete**

The kit contains the jaw-carriers and their spindles.

Parker Hannifin Corporation
Pneumatic Division - Europe

Tel: +45 63 12 83 00 | Email: ps@hymatik.com | www.hymatik.com | Hvidkaervej 27a, DK-5250 Odense SV, Denmark

P5T Thrust Cylinders



Symbol which indicates sub-components in seal kit (for replacement during maintenance)

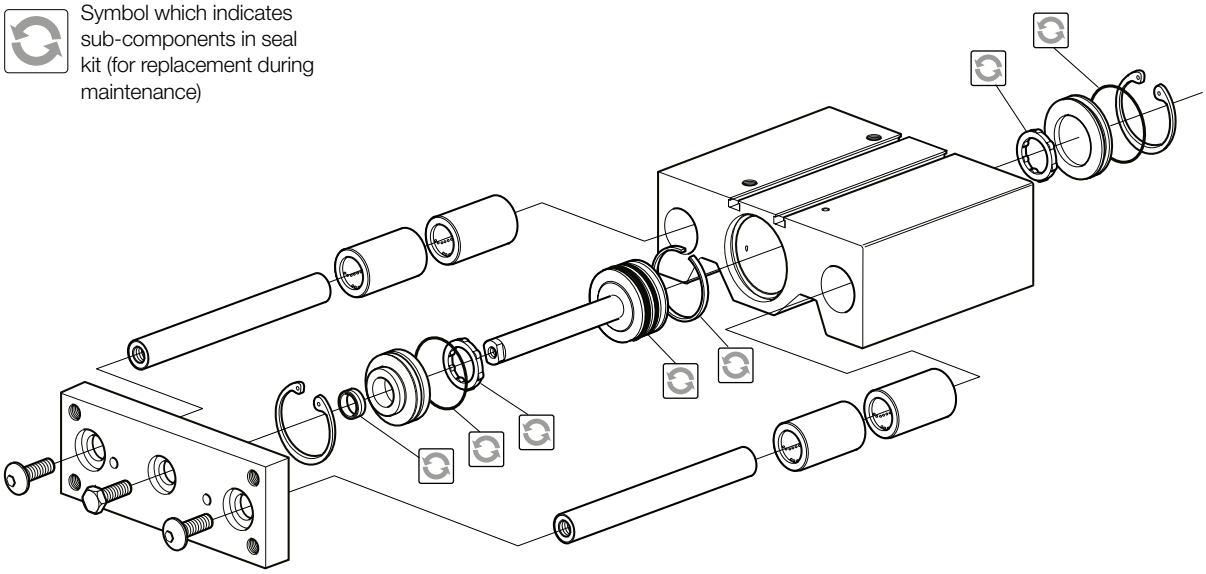

Seal kits

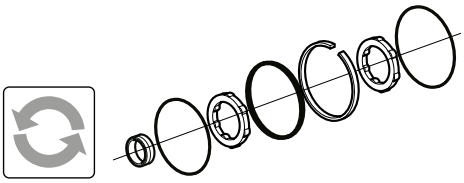

Bore mm	Standard temperature Nitrile rubber	High temperature Fluorocarbon rubber
16	PSK-P5T16	PSK-P5T16F
20	PSK-P5T20	PSK-P5T20F
25	PSK-P5T25	PSK-P5T25F
32	PSK-P5T32	PSK-P5T32F
40	PSK-P5T40	PSK-P5T40F
50	PSK-P5T50	PSK-P5T50F
63	PSK-P5T63	PSK-P5T63F
80	PSK-P5T80	PSK-P5T80F
100	PSK-P5T100	PSK-P5T100F

Grease



Standard temperature	High temperature
9127394541	9127394521

Tel: +45 63 12 83 00 | Email: ps@hymatik.com | www.hymatik.com | Hvidkaervej 27a, DK-5250 Odense SV, Denmark

P1V-S Stainless Steel Air Motors



Lubrication and service life



The first service is due after approximately 500 hours of operation. After the first service, the service interval is determined by the degree of vane wear*. The table below shows new dimensions and the minimum dimensions of worn vanes.

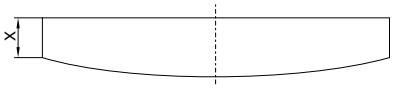

Air motor	Dimensions on new vanes X (mm), type of vanes			
	Standard	Z	C	M
P1V-S002	3,3	-	-	-
P1V-S003	X	-	-	-
P1V-S008	4,3	-	-	-
P1V-S012	4,2	4,2	4,2	4,2
P1V-S020	6,5	6,0	6,0	6,0
P1V-S028	X	X	X	X
P1V-S030	6,8	6,2	6,8	6,2
P1V-S057	X	X	X	X
P1V-S060	9,0	9,0	9,0	9,0
P1V-S086	X	X	X	X
P1V-S090	X	X	X	X
P1V-S120	14,7	14,0	14,0	14,0

Air motor	Dimensions on vanes X (mm), type of vanes			
	Standard	Z	C	M
P1V-S002	3,0	-	-	-
P1V-S003	X	-	-	-
P1V-S008	4,0	-	-	-
P1V-S012	3,3	3,3	3,3	3,3
P1V-S020	5,8	5,3	5,3	5,3
P1V-S028	X	X	X	X
P1V-S030	6,0	5,2	6,0	5,2
P1V-S057	X	X	X	X
P1V-S060	6,0	6,0	6,0	6,0
P1V-S086	X	X	X	X
P1V-S090	X	X	X	X
P1V-S120	14,2	13,5	13,5	13,5

The following normal service intervals should be applied in order to guarantee problem-free operation in air motors working continuously at load speeds.

Intermittent lubrication-free operation of motors with standard vanes, option 0

Duty cycle :	70%
Max. duration of intermittent use :	15 minutes
Filtering 40 µm :	750 hours of operation*
Filtering 5 µm :	1,000 hours of operation*

Continuous lubricated operation of motors with standard vanes, option 0

Duty cycle :	Continuous
Quantity of oil :	1 drop per m^3 of air
Filtering 40 µm :	1,000 hours of operation*
Filtering 5 µm :	2,000 hours of operation*

Note! After 1000 hours of operation, the grease in the planetary gearbox must be changed

Continuous lubrication-free operation of motors equipped with vanes, option C

Duty cycle :	Continuous
Filtering 40 µm :	750 hours of operation*
Filtering 5 µm :	1,000 hours of operation*



* The specified hours of operation apply when the motor is running at the speed corresponding to maximum power (load speed).
This is approximately half free speed.If the motor operates at higher speeds, the service interval is shorter.If the motor operates at lower speeds, the service interval is longer.

Parker Hannifin Corporation
Pneumatic Division - Europe

Tel: +45 63 12 83 00 | Email: ps@hymatik.com | www.hymatik.com | Hvidkaervej 27a, DK-5250 Odense SV, Denmark

P1V-S Stainless Steel Air Motors

The following kits are available for the basic motors, consisting of vanes, (springs), silencers, O-rings, seals and 50 g of grease. (USDA-H1 approved)

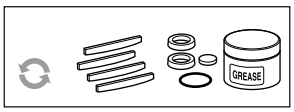

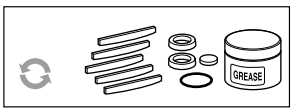

Optional function "0" and "D"

Service kits, vanes for intermittent lubrication-free operation

For motors		Order code
P1V-S002A		**P1V-6/446083B**
P1V-S003A		**P1V-6/446083B**
P1V-S008A		**P1V-6/446084B**
P1V-S012A0 / D0	(to serial no 948688)	**9121720601**
P1V-S012A0 / D0	(from serial no 948689)	**9121720636**
P1V-S020A• / D•		**9121720602**
P1V-S030A• / D•		**9121720603**
P1V-S060A0E00		**9121720604**
P1V-S060A0400		**9121720604**
P1V-S060A0350		**9121720604**
P1V-S060A0270		**9121720604**
P1V-S060A0170		**9121720604**
P1V-S060A0072		**9121720604**
P1V-S060A0063		**9121720604**
P1V-S060A0048		**9121720605**
P1V-S060A0030		**9121720605**
P1V-S060A0015		**9121720605**
P1V-S060A0010		**9121720605**
P1V-S090A0C00		**P1V-6/444919A**
P1V-S090A0350		**P1V-6/444919A**
P1V-S090A0270		**P1V-6/444919A**
P1V-S090A0170		**P1V-6/444919A**
P1V-S090A0063		**P1V-6/444919A**
P1V-S090A0048		**P1V-6/444919B**
P1V-S090A0030		**P1V-6/444919B**
P1V-S120A•800		**9121720606**
P1V-S120A•270		**9121720606**
P1V-S120A•110		**9121720606**
P1V-S120A•078		**9121720607**
P1V-S120A•032		**9121720607**
P1V-S120A•012		**9121720607**

Service kits for high torque motors

For motors	Order code
P1V-S028A0017	**P1V-6/444786B**
P1V-S028A0008	**P1V-6/444786B**
P1V-S028A0005	**P1V-6/444786B**
P1V-S028A0003	**P1V-6/444786C**
P1V-S028A0002	**P1V-6/444786C**
P1V-S057A0015	**P1V-6/444787D**
P1V-S057A0011	**P1V-6/444787D**
P1V-S057A0007	**P1V-6/444787D**
P1V-S057A0004	**P1V-6/444787E**
P1V-S086A0015	**P1V-6/444919C**
P1V-S086A0011	**P1V-6/444919C**
P1V-S086A0007	**P1V-6/444919C**
P1V-S086A0004	**P1V-6/444919D**

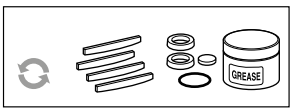

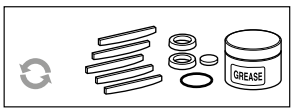

Optional function "C" and "E"

Service kits, vanes for continuous lubrication-free operation

For motors		Order code
P1V-S012AC / DC	(to serial no 948688)	**9121720608**
P1V-S012AC / DC	(from serial no 948689)	**9121720637**
P1V-S020A• / D•		**9121720609**
P1V-S030A• / D•		**9121720610**
P1V-S060ACE00		**9121720611**
P1V-S060AC400		**9121720611**
P1V-S060AC350		**9121720611**
P1V-S060AC270		**9121720611**
P1V-S060AC170		**9121720611**
P1V-S060AC072		**9121720611**
P1V-S060AC063		**9121720611**
P1V-S060AC048		**9121720612**
P1V-S060AC030		**9121720612**
P1V-S060AC015		**9121720612**
P1V-S060AC010		**9121720612**
P1V-S090ACC00		**On request**
P1V-S090AC350		**On request**
P1V-S090AC270		**On request**
P1V-S090AC170		**On request**
P1V-S090AC063		**On request**
P1V-S090AC048		**On request**
P1V-S090AC030		**On request**
P1V-S120A•800		**9121720613**
P1V-S120A•270		**9121720613**
P1V-S120A•110		**9121720613**
P1V-S120A•078		**9121720614**
P1V-S120A•032		**9121720614**
P1V-S120A•012		**9121720614**

• : 0 or D, C or E

Tel: +45 63 12 83 00 | Email: ps@hymatik.com | www.hymatik.com | Hvidkaervej 27a, DK-5250 Odense SV, Denmark

P1V-S Stainless Steel Air Motors

Service kits

The following kits are available for the basic motors, consisting of vanes, (springs), silencers, O-rings, seals and 50 g of grease. (USDA-H1 approved)



Optional function "Z" and "F"

Service kits, spring-loaded vanes for intermittent lubrication-free operation

For motors	Order code
P1V-S012AZ / DZ (to serial no 948688)	**9121720615**
P1V-S012AZ / DZ (from serial no 948689)	**9121720638**
P1V-S020A• / D•	**9121720616**
P1V-S030A• / D•	**9121720617**
P1V-S060AZE00	**9121720618**
P1V-S060AZ400	**9121720618**
P1V-S060AZ350	**9121720618**
P1V-S060AZ270	**9121720618**
P1V-S060AZ170	**9121720618**
P1V-S060AZ072	**9121720618**
P1V-S060AZ048	**9121720619**
P1V-S060AZ072	**9121720619**
P1V-S060AZ063	**9121720619**
P1V-S060AZ010	**9121720619**
P1V-S090AZC00	**On request**
P1V-S090AZ350	**On request**
P1V-S090AZ270	**On request**
P1V-S090AZ170	**On request**
P1V-S090AZ063	**On request**
P1V-S090AZ048	**On request**
P1V-S090AZ030	**On request**
P1V-S120A•800	**9121720620**
P1V-S120A•270	**9121720620**
P1V-S120A•110	**9121720620**
P1V-S120A•078	**9121720621**
P1V-S120A•032	**9121720621**
P1V-S120A•012	**9121720621**

• : Z or F, M or G

Optional function "M" and "G"

Service kits, spring-loaded vanes for continuous lubrication-free operation

For motors	Order code
P1V-S012AM / DM (to serial no 948688)	**9121720622**
P1V-S012AM / DM (from serial no 948689)	**9121720639**
P1V-S020A• / D•	**9121720623**
P1V-S030A• / D•	**9121720624**
P1V-S060AME00	**9121720625**
P1V-S060AM400	**9121720625**
P1V-S060AM270	**9121720625**
P1V-S060AM170	**9121720625**
P1V-S060AM072	**9121720625**
P1V-S060AM048	**9121720626**
P1V-S060AM030	**9121720626**
P1V-S060AM010	**9121720626**
P1V-S090AMC00	**On request**
P1V-S090AM350	**On request**
P1V-S090AM270	**On request**
P1V-S090AM170	**On request**
P1V-S090AM063	**On request**
P1V-S090AM048	**On request**
P1V-S090AM030	**On request**
P1V-S120A•800	**9121720627**
P1V-S120A•270	**9121720627**
P1V-S120A•110	**9121720627**
P1V-S120A•078	**9121720628**
P1V-S120A•032	**9121720628**
P1V-S120A•012	**9121720628**

Service kits for brake module for motors with brakes

For motors	Order code
P1V-S020AD and P1V-S030AD	**P1V-6/446096C**
P1V-S120AD	**P1V-6/4460961B**

Comment: To perform a full service on a brake motor, you will need a normal service kit as well as a service kit for the brake module.

Tel: +45 63 12 83 00 | Email: ps@hymatik.com | www.hymatik.com | Hvidkaervej 27a, DK-5250 Odense SV, Denmark

P1V-M Robust Air Motors Black Housing

Lubrication and service life

The first service is due after approximately 500 hours of operation. After the first service, the service interval is determined by the degree of vane wear*. The table below shows new dimensions and the minimum dimensions of worn vanes.

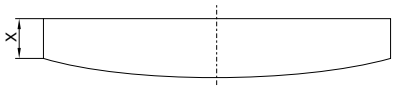

Air motors	Dimensions on new vanes X [mm]	Minimum dimensions on vane X [mm]
P1V-M020	8,5	6,5
P1V-M040	7,0	5,0
P1V-M060	8,0	6,0

Intermittent operation of motors with standard vanes, oil free lubrication

Duty cycle :	70%
Max. duration of intermittent use :	15 minutes
Filtration 40 µm :	750 hours of operation*
Filtration 5 µm :	1 000 hours of operation*

Continuous operation of motors with standard vanes, with lubrication

Duty cycle :	Continuous
Quantity of oil :	1 drop per m^3 of air
Filtration 40 µm :	1 000 hours of operation*
Filtration 5 µm :	2 000 hours of operation*

NOTE! The grease in the planetary gearbox must be checked once in a year and be changed if necessary. (Molycote BR2+)

Service kits

The following kits are available for the basic motors, consisting of vanes and (springs).



Service kits, vanes for intermittent lubrication operation, option "0"

For motors	Order code
P1V-M020	**P1V-6/831297A**
P1V-M040	**P1V-6/831298A**
P1V-M060	**P1V-6/831299A**



Service kits, vanes for intermittent lubrication operation, option "Z"

For motors	Order code
P1V-M020	**Consult Factory**
P1V-M040	**Consult Factory**
P1V-M060	**Consult Factory**

Spare parts

Robust motors	Order code
P1V-M020	**Obsolete**
P1V-M040	**Obsolete**
P1V-M060	**Obsolete**

Gear boxes with flange	Order code
A0A00 (1 stage)	**Obsolete**
A0290 (1 stage)	**Obsolete**
A0150 (1 stage)	**Obsolete**
A0081 (2 stages)	**Obsolete**
A0041 (2 stages)	**Obsolete**
A0021 (2 stages)	**Obsolete**
A0009 (3 stages)	**Obsolete**
A0006 (3 stages)	**Obsolete**
A0003 (3 stages)	**Obsolete**

* The following normal service intervals should be applied in order to guarantee problem-free operation in air motors working continuously at load speeds. The specified hours of operation apply when the motor is running at the speed corresponding to maximum power (load speed). This is approximately half free speed. If the motor operates at higher speeds, the service interval is shorter. If the motor operates at lower speeds, the service interval is longer.

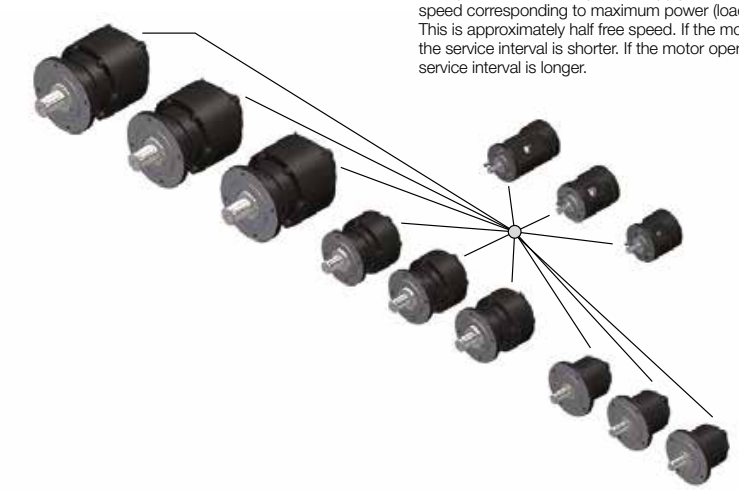

Tel: +45 63 12 83 00 | Email: ps@hymatik.com | www.hymatik.com | Hvidkaervej 27a, DK-5250 Odense SV, Denmark

P1V-M - Robust Air Motors Grey Housing

Lubrication and service life

The first service is due after approximately 500 hours of operation. After the first service, the service interval is determined by the degree of vane wear*. The table below shows new dimensions and the minimum dimensions of worn vanes.

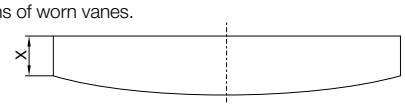

Air motors	Dimensions on new vanes X [mm]	Minimum dimensions on vane X [mm]
P1V-M020	8,5	6,5
P1V-M040	7,0	5,0
P1V-M060	8,0	6,0
P1V-M090	X	X
P1V-M120	X	X

Spare parts

For motor with Z optional function, please consult factory

	Spare parts Order Code	
Motor	**Air Motor (1)**	**Gear Box (2)**
P1V-M020C0230	**P1V-M/202193A**	**P1V-M/202202B**
P1V-M020C0146	**P1V-M/202193A**	**P1V-M/202202D**
P1V-M020C0054	**P1V-M/202193A**	**P1V-M/202202G**
P1V-M020C0034	**P1V-M/202193B**	**P1V-M/202202C**
P1V-M020C0021	**P1V-M/202193B**	**P1V-M/202202E**
P1V-M020C0012	**P1V-M/202193B**	**P1V-M/202202F**
P1V-M020C0008	**P1V-M/202193B**	**P1V-M/202202H**
P1V-M020C0003	**P1V-M/202193B**	**P1V-M/202202I**
Motor	**Air Motor (1)**	**Gear Box (2)**
P1V-M040C0230	**P1V-M/202194A**	**P1V-M/202202B**
P1V-M040C0146	**P1V-M/202194A**	**P1V-M/202202D**
P1V-M040C0054	**P1V-M/202194A**	**P1V-M/202202G**
P1V-M040C0034	**P1V-M/202194B**	**P1V-M/202202C**
P1V-M040C0021	**P1V-M/202194B**	**P1V-M/202202E**
P1V-M040C0012	**P1V-M/202194B**	**P1V-M/202202F**
P1V-M040C0008	**P1V-M/202194B**	**P1V-M/202202H**
Motor	**Air Motor (1)**	**Gear Box (2)**
P1V-M060C0230	**P1V-M/202179A**	**P1V-M/202202B**
P1V-M060C0146	**P1V-M/202179A**	**P1V-M/202202D**
P1V-M060C0054	**P1V-M/202179A**	**P1V-M/202202G**
P1V-M060C0034	**P1V-M/202179B**	**P1V-M/202202C**
P1V-M060C0021	**P1V-M/202179B**	**P1V-M/202202E**
P1V-M060C0012	**P1V-M/202179B**	**P1V-M/202202F**
Motor	**Air Motor (1)**	**Gear Box (2)**
P1V-M090C0245	**P1V-M/202409A**	**P1V-M/807015B**
P1V-M090C0156	**P1V-M/202409B**	**P1V-M/807015C**
P1V-M090C0058	**P1V-M/202409A**	**P1V-M/807015D**
P1V-M090C0036	**P1V-M/202409B**	**P1V-M/807015E**
P1V-M090C0023	**P1V-M/202409B**	**P1V-M/807015F**
P1V-M090C0013	**P1V-M/202409A**	**P1V-M/807015G**
P1V-M090C0009	**P1V-M/202409B**	**P1V-M/807015H**
P1V-M090C0004	**P1V-M/202409B**	**P1V-M/807015I**
Motor	**Air Motor (1)**	**Gear Box (2)**
P1V-M120C0245	**P1V-M/202457A**	**P1V-M/807015B**
P1V-M120C0156	**P1V-M/202457B**	**P1V-M/807015C**
P1V-M120C0058	**P1V-M/202457A**	**P1V-M/807015D**
P1V-M120C0036	**P1V-M/202457B**	**P1V-M/807015E**
P1V-M120C0023	**P1V-M/202457B**	**P1V-M/807015F**

Service kits

The following kits are available for the basic motors, consisting of vanes.



Service kits, vanes for intermittent lubrication operation, option "0"

For motors	Order code
P1V-M020	**P1V-6/4462971A**
P1V-M040	**P1V-6/4462981A**
P1V-M060	**P1V-6/4462991A**
P1V-M090	**P1V-6/4449171A**
P1V-M120	**P1V-6/4449181A**

The following kits are available for the basic motors, consisting of vanes and springs.



Service kits, vanes for intermittent lubrication operation, option "Z"

For motors	Order code
P1V-M020	**P1V-6/4449144B**
P1V-M040	**P1V-6/4449154B**
P1V-M060	**P1V-6/4449164B**
P1V-M090	**P1V-6/4449174B**
P1V-M120	**P1V-6/4449184B**

* The following normal service intervals should be applied to in order to guarantee problem-free operation in air motors working at load speeds. The specified hours of operation apply when the motor is running at the speed corresponding to maximum power (load speed). This is approximately half free speed. If the motor operates at higher speeds, the service interval is shorter. If the motor operates at lower speeds, the service interval is longer.



Tel: +45 63 12 83 00 | Email: ps@hymatik.com | www.hymatik.com | Hvidkaervej 27a, DK-5250 Odense SV, Denmark

P1V-A - Air Motors Grey Housing

Lubrication and service life

Oil and oil mist are things which one tries to avoid to get the best possible working environment. In addition, purchasing, installation and maintenance of oil mist equipment costs money and, above all, time to achieve optimum lubrication effect.

The P1V-A motor is equipped with vanes for intermittent operation as standard for most common applications.

Service interval



The first service is due after approximately 500 hours of operation. After the first service, the service interval is determined by the degree of vane wear.

The following normal service intervals should be applied to in order to guarantee problem-free operation in air motors working continuously at load speeds.

Intermittent lubrication operation

Duty cycle	70%
Max. duration of intermittent use	15 minutes
Oil volume	1 drop oil/Nm^3
Filtering 40 µm	app. 750 hours operation
Filtering 5 µm	app. 1,000 hours operation

Continuous lubrication operation

Oil volume	1 drop oil/Nm^3
Filtering 40 µm	app. 1,000 hours operation
Filtering 5 µm	app. 2,000 hours operation

Continuous lubrication operation

Oil volume	Oil free
Filtering 40 µm	app. 750 hours operation
Filtering 5 µm	app. 1,000 hours operation

Standard vanes (0, D):

For intermittent lubrication-free operation.

They can operate 70% of the time for up to 15 minutes without lubrication.

With lubrication, these motors can operation 100% of the time.

"Black" vanes (C, E):

For continuous lubrication-free operation.

(To obtain the longest possible service life, we recommend no oil in the air.)

Service kits

The following kits are available for the basic motors, consisting of vanes, O-rings and springs:

Motor type	Motor power Watt	Order code	
		Vanes for intermittent lubrification operation, options "O & D"	Vanes for continuous lubrification operation, options "C & E"
P1V-A160A0900	1600	**P1V-6/4450331B**	**P1V-6/4450332B**
P1V-A160D0300	1600	**P1V-6/4450331D**	**P1V-6/4450332D**
P1V-A160B0140	1600	**P1V-6/4450331E**	**P1V-6/4450332E**
P1V-A160B••••	1600	**P1V-6/4450331B**	**P1V-6/4450332B**
P1V-A160H••••••	1600	**P1V-6/4450331B**	**P1V-6/4450332B**
P1V-A160F••••••	1600	**P1V-6/4450331B**	**P1V-6/4450332B**
P1V-A160G••••••	1600	**P1V-6/4450331B**	**P1V-6/4450332B**
P1V-A160D••••••	1600	**P1V-6/4450331B**	**P1V-6/4450332B**
P1V-A160E••••••	1600	**P1V-6/4450331B**	**P1V-6/4450332B**
P1V-A320A0700	3200	**P1V-6/4450341B**	**P1V-6/4450342B**
P1V-A320D0300	3200	**P1V-6/4450341D**	**P1V-6/4450342D**
P1V-A320B0140	3200	**P1V-6/4450341E**	**P1V-6/4450342E**
P1V-A320B0060	3200	**P1V-6/4450341B**	**P1V-6/4450342B**
P1V-A320H••••••	3200	**P1V-6/4450341B**	**P1V-6/4450342B**
P1V-A320F••••••	3200	**P1V-6/4450342B**	**P1V-6/4450342B**
P1V-A320G••••••	3200	**P1V-6/4450341B**	**P1V-6/4450342B**
P1V-A320D••••••	3200	**P1V-6/4450341B**	**P1V-6/4450342B**
P1V-A320E••••••	3200	**P1V-6/4450341B**	**P1V-6/4450342B**
P1V-A500A0600	5000	**P1V-6/4450351B**	**P1V-6/4450352B**
P1V-A500D0300	5000	**P1V-6/4450351D**	**P1V-6/4450352D**
P1V-A500B0145	5000	**P1V-6/4450351E**	**P1V-6/4450352B**
P1V-A500H••••••	5000	**P1V-6/4450351B**	**P1V-6/4450352B**
P1V-A500F••••••	5000	**P1V-6/4450351B**	**P1V-6/4450352B**
P1V-A500G••••••	5000	**P1V-6/4450351B**	**P1V-6/4450352B**
P1V-A500D••••••	5000	**P1V-6/4450351B**	**P1V-6/4450352B**
P1V-A500E••••••	5000	**P1V-6/4450351B**	**P1V-6/4450352B**
P1V-A600A0700	6000	**P1V-6/4450351B**	**P1V-6/4450352B**
P1V-A600D0350	6000	**P1V-6/4450351D**	**P1V-6/4450352D**
P1V-A600B0160	6000	**P1V-6/4450351E**	**P1V-6/4450352E**
P1V-A900A0600	9000	**P1V-6/440246C**	-
P1V-AJ00A0600	18000	**P1V-6/440246B**	-

•••••• Rest of the air motor order code

For more information about our maintenance services, please contact your local parker sales office.

Tel: +45 63 12 83 00 | Email: ps@hymatik.com | www.hymatik.com | Hvidkaervej 27a, DK-5250 Odense SV, Denmark

PRO - PRN Rotary Actuators



PRO Miniature Series

Maintenance kits

The maintenance kit consists in the vane shaft, shoe seal and shaft 'O' rings

Single vane		Double vane	
PROA3S	**PRNA3S-PS**	**PROA3D**	**PRNA3D-PS**
PROA10S	**PRNA10S-PS**	**PROA10D**	**PRNA10D-PS**
PROA20S	**PRNA20S-PS**	**PROA20D**	**PRNA20D-PS**
PRO30SE	**PRN30S-PS**	**PRO30DE**	**PRN30D-PS**

PRN Miniature Series

Maintenance kits

The maintenance kit consists in the vane shaft, shoe seal and shaft 'O' rings

Single vane		Double vane	
PRNA1S	**PRNA1S-PS**	**PRNA1D**	**PRNA1D-PS**
PRNA3S	**PRNA3S-PS**	**PRNA3D**	**PRNA3D-PS**
PRNA10S	**PRNA10S-PS**	**PRNA10D**	**PRNA10D-PS**
PRNA20S	**PRNA20S-PS**	**PRNA20D**	**PRNA20D-PS**
PRN30SE	**PRN30S-PS**	**PRN30D E**	**PRN30D-PS**

PRN High Torque Series

Maintenance kits

The maintenance kit consists in the vane shaft, shoe seal and shaft 'O' rings

Single vane		Double vane	
PRN050SE	**PRN50S-PS**	**PRN50DE**	**PRN50D-PS**
PRN150SE	**PRN150S-PS**	**PRN150DE**	**PRN510D-PS**
PRN300SE	**PRN300S-PS**	**PRN300DE**	**PRN300D-PS**
PRN800SE	**PRN800S-PS**	**PRN800DE**	**PRN800D-PS**

Tel: +45 63 12 83 00 | Email: ps@hymatik.com | www.hymatik.com | Hvidkaervej 27a, DK-5250 Odense SV, Denmark

PV Rotary Actuators



Seal kits

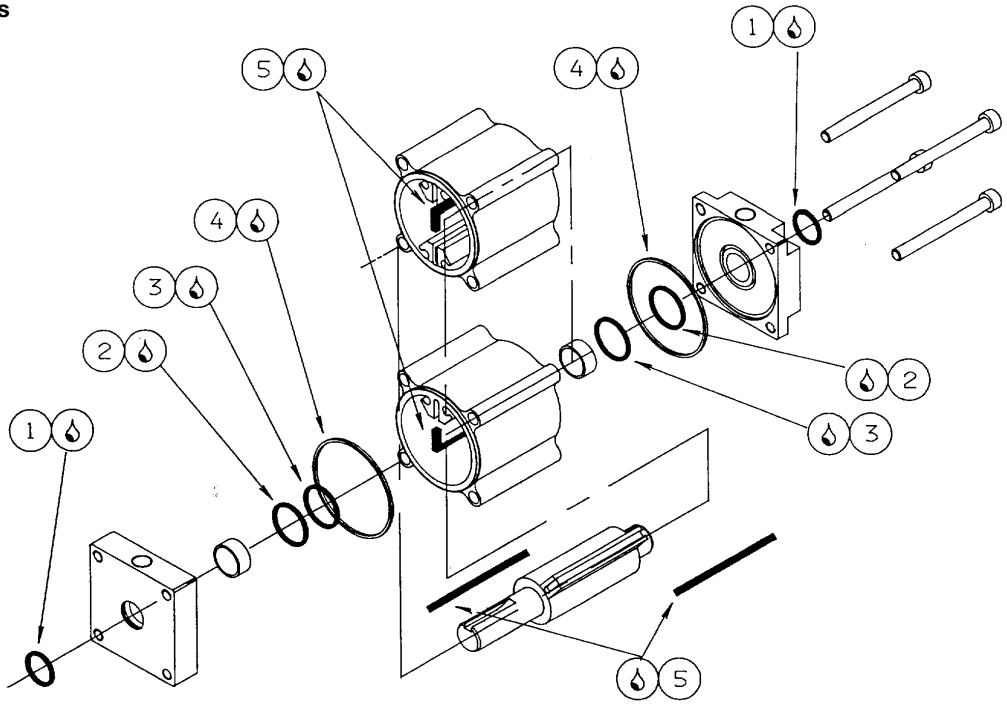

Lubricate with grease Parker ref: **3099**

Size	Type	**Order code**	Components				
			1	2	3	4	5
			Shaft seal	Teflon seal	Shoulder seal	'O' ring	vane seal
10	Single	**PSK-PV10**	2	2	2	2	2
10	Double	**PSK-PV10D**	2	2	2	2	4
11	Single	**PSK-PV11**	2	2	2	2	2
11	Double	**PSK-PV11D**	2	2	2	2	4
22	Single	**PSK-PV22**	2	2	2	2	2
22	Double	**PSK-PV22D**	2	2	2	2	4
33	Single	**PSK-PV33**	2	2	2	2	2
33	Double	**PSK-PV33D**	2	2	2	2	4

Tel: +45 63 12 83 00 | Email: ps@hymatik.com | www.hymatik.com | Hvidkaervej 27a, DK-5250 Odense SV, Denmark

Air Bellows

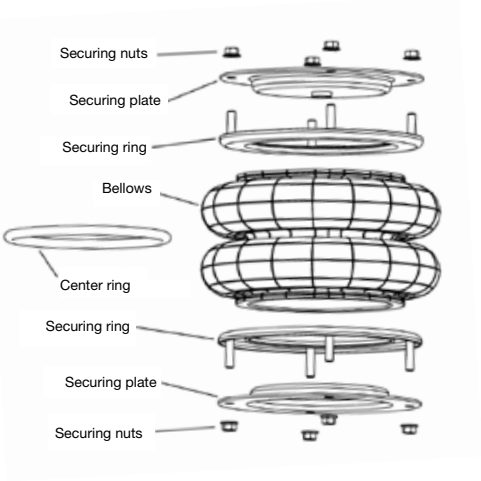



Spare parts

Ø (mm) (inch size)	Type	Nb. conv.	For		Order Code									
			Standard bellow	High temp. bellow	Standard rubber membrane	High temp. rubber membrane	Qty *	Plate without air port	Qty *	Plate with air port	Qty *	Clamping support	Qty *	Central ring
Ø 70 (2.3/4")	2.3/4 x 1	1	9109025	9109525	**9109144**	**9109302**	**1**	**9109065**	**1**	**9109181**	**2**	**9109193**	-	-
	2.3/4 x 2	2	9109009	9109509	**9109152**	**9109303**							**1**	**9109209**
	2.3/4 x 3	3	9109010	9109510	**9109090**	**9109304**							**2**	
Ø 110 (4.1/2")	4.1/2 x 1	1	9109400	9109500	**9109145**	**9109288**	**1**	**9109188**	**1**	**9109187**	**2**	**9109186**	-	-
	4.1/2 x 2	2	9109401	9109501	**9109189**	**9109289**							**2**	**9109184**
	4.1/2 x 3	3	9109402	9109502	**9109147**	**9109287**							**3**	
Ø 150 (6") Alu.	6 x 1	1	9109004A	9109204A	**9109191**	**9109391**	**1**	**9109070A**	**1**		**2**	**9109080A**	-	-
	6 x 2	2	9109001A	9109201A	**9109091**	**9109291**							**1**	
	6 x 3	3	9109007A	9109207A	**9109149**	**9109286**							**2**	
Ø 150 (6") Steel	8 x 1	1	9109004	9109204	**9109191**	**9109391**	**1**	**9109070**	**1**	**9109075**	**2**	**9109080**	-	-
	8 x 2	2	9109001	9109201	**9109091**	**9109291**							**1**	**9109098**
	8 x 3	3	9109007	9109207	**9109149**	**9109286**							**2**	
Ø 200 (8")	8 x 1	1	9109014	9109214	**9109192**	**9109392**	**1**	**9109071**	**1**	**9109076**	**2**	**9109086**	-	-
	8 x 2	2	9109011	9109211	**9109092**	**9109292**							**1**	**9109099**
	8 x 3	3	9109017	9109217	**9109151**	**9109300**							**2**	
Ø 250 (10")	10 x 1	1	9109024	9109224	**9109146**	**9109393**	**1**	**9109072**	**1**	**9109077**	**2**	**9109087**	-	-
	10 x 2	2	9109021	9109221	**9109093**	**9109293**							**1**	**9109100**
	10 x 3	3	9109031	9109231	**9109094**	**9109294**							**2**	
Ø 300 (12")	12 x 1	1	9109044	9109244	**9109195**	**9109395**	**1**	**9109073**	**1**	**9109078**	**2**	**9109088**	-	-
	12 x 2	2	9109041	9109241	**9109095**	**9109295**							**1**	**9109101**
	12 x 3	3	9109051	9109251	**9109096**	**9109296**							**2**	
Ø 370 (14.1/2")	4.1/2 x 1	1	9109064	9109264	**9109197**	**9109397**	**1**	**9109074**	**1**	**9109178**	**2**	**9109189**	-	-
	4.1/2 x 2	2	9109061	9109261	**9109097**	**9109297**							**1**	**9109170**
	4.1/2 x 3	3	9109069	9109269	**9109148**	**9109301**							**2**	
Ø 410 (16")	16 x 1	1	9109026	9109226	**9109142**	**9109284**	**1**	**9109074**	**1**	**9109178**	**2**	**9109089**	-	-
	16 x 2	2	9109171	9109271	**9109199**	**9109298**							**1**	**9109170**
	16 x 3	3 *	9109177	9109277	**9109200**	**9109299**							**2**	
Ø 550 (21.1/2")	21.1/2 x 2	2	9109156	9109250	**9109190**	**9109290**	**1**	**9109068**		**9109167**	**2**	**9109183**	**1**	**9109185**
	21.1/2 x 2	2 **		9109253				/		/	-	/	-	
Ø 660 (26")	26 x 2	2	9109159	/		/	**1**	**9109155**		**9109157**	**2**	**9109183**	**1**	**9109185**
	26 x 2	2 **			**9109198**			/		/	-	/	-	

Nuts are not considered as spare parts

* bag quantity is 1 piece

** Air bellows less plates

Note: For stainless steel spare parts, please consult factory.

Parker Hannifin Corporation
Pneumatic Division - Europe

Tel: +45 63 12 83 00 | Email: ps@hymatik.com | www.hymatik.com | Hvidkaervej 27a, DK-5250 Odense SV, Denmark

C05 Pancake Cylinders



Non repairable
Replace complete cylinder

P1G Cartridge Cylinders



Non repairable
Replace complete cylinder

P1Q Compact Cylinders



Non repairable
Replace complete cylinder

P1J Compact Cylinders



Non repairable
Replace complete cylinder

P1A Mini ISO 6432



Non repairable
Replace complete cylinder

P1S Stainless Steel Cylinders

ISO 6432 - 10mm - 25mm bore



Non repairable
Replace complete cylinder

Round Cylinders - R Series

Ø32 - Ø63



Non repairable
Replace complete cylinder

Round Cylinders - R Series

Ø10 - Ø25



Non repairable
Replace complete cylinder

MC-SC Shock Absorbers



Non repairable
Replace shock absorber

P5GA Grippers



Non repairable
Replace complete gripper

P5GB Grippers



Non repairable
Replace complete gripper

P5GD Grippers



Non repairable
Replace complete gripper

P5GL Grippers



Non repairable
Replace complete gripper

P5RS Rotating Tables



Non repairable
Replace complete table

P5SS Precision Slide Tables



Non repairable
Replace complete table

3D Linear Units



Spares No Longer Available

3H Grippers



Spares No Longer Available

Short Stroke Units

(M16 and M25)



Spares No Longer Available

3D Base Rotate Units



Spares No Longer Available

3D Wrist Rotate Units

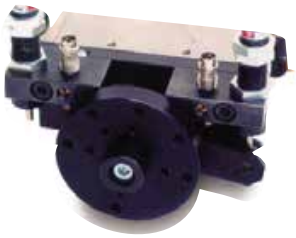

Spares No Longer Available

CXP Cylinders



Spares No Longer Available

P5SP Precision Slide Table



Spares No Longer Available

3F Carrier Unit



Spares No Longer Available











Control Devices

Viking Xtreme

For solenoid operator and coil, please refer to **15mm and 22mm** solenoid range at the end of this chapter



Accessories P2LA	Type	Weight kg	Order code
	**Blanking plate, P2LA** for Pressure bar	0,05	**9121658074**
	**Assembly screws, P2LA** in stainless steel for valve	0,02	**9121658043**
	**Assembly screws, P2LA** in stainless steel for blanking plate	0,01	**9121658044**
	**O-ring kit, P2LA** O-rings between valve and manifold bar/Pressure bar	0,01	**9121658046**

Adaptor for 15mm solenoid operator



Description	Order code
For 15mm solenoid operator	**P2FA22-15**

Screws
Self tapping Ø3 26,2mm length (stainless steel) for mounting 15mm solenoid

	Description	Order code
	Set of 10 screws	**P2E-KD027SS3**

Gaskets
for mounting between power valves and 15mm solenoid actuators

	Description	Order code
	Set of 10 gaskets	**P2LXSK1**

Spare kit



Description	Order code
for 5/2 P2L**A**X valves	**P2LAXSK1**
for 5/3 P2L**A**X valves	**P2LAXSK2**
for 5/2 &5/3 P2L**B**X valves	**P2LBXSK1**
for 5/2 &5/3 P2L**C**X valves	**P2LCXDXSK1**
for 5/2 &5/3 P2L**D**X valves	**P2LCXDXSK1**

Tel: +45 63 12 83 00 | Email: ps@hymatik.com | www.hymatik.com | Hvidkaervej 27a, DK-5250 Odense SV, Denmark

B Valves

B3, B4 and B5 Spool/Body repair kits contain:

- Spool
- Spool seals
- Lip seal – operator pistons
- Gaskets
- Spool springs
- Grease packet

B3 series valves

3/2 solenoid and remote air pilot operated valves -Spool/Body Repair kit	**PS2971F**
5/2 solenoid and remote air pilot operated valves -Spool/Body Repair kit	**PS2901F**
5/3 APB solenoid and remote pilot operated valves - Spool/Body Repair kit	**PS2902F**

Manifold gasket kits

3/2 IEM Gasket kit (10 valve/manifold gaskets)	**PS2980F**
5/2 IEM Gasket kit (10 valve/manifold gaskets)	**PS2981F**



For solenoid operator and coil, refer to **15mm** solenoid range at the end of this chapter

B4 series valves

3/2 solenoid and remote air pilot operated valves - Spool/Body Repair kit	**PS4571F**
5/2 solenoid and remote air pilot operated valves - Spool/Body Repair kit	**PS4501F**
5/3 solenoid and remote pilot operated valves – APB Spool/Body Repair kit	**PS4502F**
5/3 solenoid and remote pilot operated valves – CE Spool/Body repair kit	**PS4503F**
5/3 solenoid and remote pilot operated valves – PC Spool/Body repair kit	**PS4504F**

Manifold gasket Kits.

3/2 IEM Gasket Kit (10 valve/manifold gaskets)	**PS4580F**
5/2 IEM Gasket Kit (10 valve/manifold gaskets)	**PS4581F**



For solenoid operator and coil, refer to **15mm** solenoid range at the end of this chapter

B5 series valves

3/2 solenoid and remote air pilot operated valves - Spool/Body Repair kit	**PS2871P**
5/2 solenoid and remote air pilot operated valves - Spool/Body Repair kit	**PS2801P**
5/3 solenoid and remote pilot operated valves – APB Spool/Body Repair kit	**PS2802P**
5/3 solenoid and remote pilot operated valves – CE Spool/Body repair kit	**PS 2803P**
5/3 solenoid and remote pilot operated valves – PC Spool/Body repair kit	**PS2804P**

Manifold gasket Kits.

3/2 & 5/2 IEM Gasket kit PS2884P (10 valve/manifold gaskets)	**PS2884P**



For solenoid operator and coil, refer to the **22mm** solenoid range at the end of this chapter

Gaskets
for mounting between power valves and 15mm solenoid actuators

Description	Order code
Set of 10 gaskets	**P2LXSK1**



Parker Hannifin Corporation
Pneumatic Division - Europe

Tel: +45 63 12 83 00 | Email: ps@hymatik.com | www.hymatik.com | Hvidkaervej 27a, DK-5250 Odense SV, Denmark

Midget & Intermediate Valves

Service and Replacement Parts

B43 Series Manually Operated Valves

Order code	Actuator	Replacement actuator	Repair kit
B43003BXS	Button	**43004BX-100**	Body seal **43007A**
B43004BXS	Button		
B43004HXS	Button, Push/Pull	**43004H-100**	
B43003LS	Lockdown lever	**43004L-200**	
B43004LS	Lockdown lever		

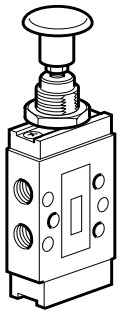

B53 Series Manually Operated Valves

Order code	Actuator	Replacement actuator	Repair kit
B53003HXS	Button	**53004HX-100**	Body seal **53007**
B53004HXS	Button		
B53003HX	Button, Push/Pull		
B53004HX	Button, Push/Pull		
B53004HXX	Button, Self centring		
B53004HXY	Button, Self centring		
B53004HXZ	Button, Self centring		
B53003FS	Foot	**53004F-100**	
B53004FS	Foot		
B53003LS	Lever	**53004L-198**	
B53004LS	Lever		
B53003LT	Lever, 2 positions	**53004L-196**	Body seal **53007**
B53004LT	Lever, 2 positions		
B53004L	Lever, 3 positions	**53004L-100**	Lever kit **53004L-300R**
B53004LW	Lever, 3 positions		
B53004LX	Lever, Self centring	**53004L-198**	
B53004LY	Lever, Self centring		

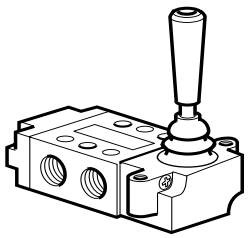

B43 Series Mechanically Operated Valves

Order code	Actuator	Replacement actuator	Repair kit
B43003CS	Plunger	**43004C-100**	Body seal **43007A**
B43004CS	Plunger		
B43003RS	Roller Lever	**43004R-200**	
B43004RS	Roller Lever		

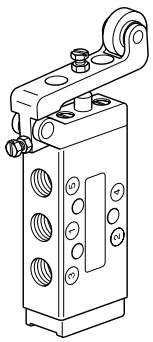

B53 Series Mechanically Operated Valves

Order code	Actuator	Replacement actuator	Repair kit
B53003CS	Plunger	**53004C-100**	Body seal **53007**
B53004CS	Plunger		
B53003RS	Roller	**53004R-100**	
B53004RS	Roller		

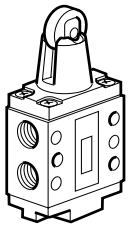

Tel: +45 63 12 83 00 | Email: ps@hymatik.com | www.hymatik.com | Hvidkaervej 27a, DK-5250 Odense SV, Denmark

Heavy Duty Poppet Valves



Seal Repair Kit

Order Code
107

For solenoid operator and coil, refer to **22mm** solenoid range at the end of this chapter.

VA Valves



Service and Replacement Parts

VA Series Heavy Duty Valves

Order code	Repair Kit
9128674100	Body seals (6 pcs. 'O' Ring)

G1/8 Poppet Valves



Repair kits

Description	Order code
Mechanically, manually and air pilot operated valves	**43608**
Diaphragm operated valves	**43608B**

Parker Hannifin Corporation
Pneumatic Division - Europe

Tel: +45 63 12 83 00 | Email: ps@hymatik.com | www.hymatik.com | Hvidkaervej 27a, DK-5250 Odense SV, Denmark

Apollo ISO Valves



Solenoid



Description	Order code
24VCD	**P2FP23N4C + P2FCA449**
24VAC	**P2FP23N4C + P2FCA442**
110VAC	**P2FP23N4C + P2FCA453**
220VAC	**P2FP23N4C + P2FCA457**

Solenoid



Description	Order code
24VCD	**250CMTF**
24VAC	**250CMTA**
48VAC	**250CMTC**
110VAC	**250CMS**
220VAC	**250CMTL**

Gaskets



for mounting between power valves and subbases

Description	Order code
for ISO 1 valves	**19104-9**
for ISO 2 valves	**29104-9**
for ISO 3 valves	**39104-9**

Spares Kit



Description	Order code
for ISO 1 valves	**19107**
for ISO 2 valves	**29107**
for ISO 3 valves	**39107**

Tel: +45 63 12 83 00 | Email: ps@hymatik.com | www.hymatik.com | Hvidkaervej 27a, DK-5250 Odense SV, Denmark

ISO Valves - Flexflow



For solenoid operator and coil concerning:

VG25-**E**xxxx / VG25-X**E**xxxx / VG25-Y**E**xxxx
VG35-**E**xxxx / VG35-X**E**xxxx / VG35-Y**E**xxxx
VG45-**E**xxxx / VG45-X**E**xxxx / VG45-Y**E**xxxx

refer to **22mm** solenoid range at the end of this chapter

For solenoid operator and coil concerning:

VG25-**A**xxxx / VG25-X**A**xxxx / VG25-Y**A**xxxx
VG35-**A**xxxx / VG35-X**A**xxxx / VG35-Y**A**xxxx
VG45-**A**xxxx / VG45-X**A**xxxx / VG45-Y**A**xxxx

refer to **30mm** CNOMO solenoid range at the end of this chapter

VG25 Seals



VG25 Sleeve + Spool + Seal kit
(all VG25 valves except 5/3 closed centre)

P2N-A6/S90066

Valve to sub-base - VG25 seals (x10) kit

P2N-A6/S90069

VE35 Complete seals kit

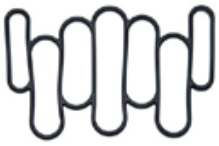

VG35 Sleeve + Spool + Seal kit
(all VG35 valves except 5/3 closed centre)

P2N-B6/S90070

Valve to sub-base - VG35 seals (x10) kit

P2N-B6/S90073

VG45 Seals

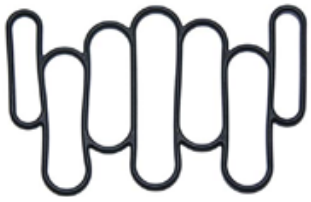

VG45 Sleeve + Spool + Seal kit
(only 5/2 VG45 valves)

P2N-C6/S90074

Valve to sub-base - VG45 seals (x10) kit

P2N-C6/S90077

VE45 Complete seals kit

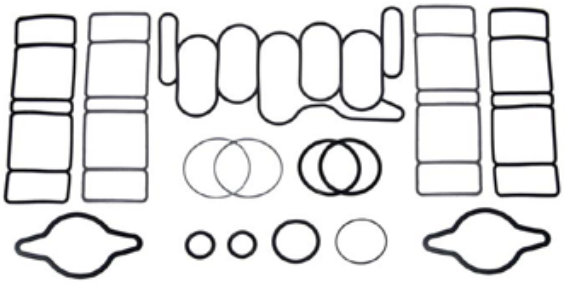

9121558480

ISO Valves - DX1 - DX2 - DX3

Adaptor for 15mm solenoid operator



Description	Order code
For 15mm solenoid operator	**58DX-70/6291**

Cover Plate



Description	Order code
Batch of 20	**JBDX00/020-A**

External seals kit

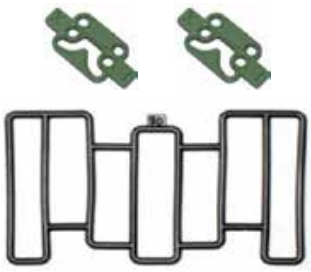

Description	Order code
for DX1 valves	**JJDX10-A**
for DX2 valves	**JJDX20-A**
for DX3 valves	**JJDX30-A**

Gaskets



For mounting between power valves and solenoid actuators:

Description	Order code
Set of 20 gaskets	**PPR-V20**

Operator adapter



Description	Order code
Batch of 20	**P2FNS**



For solenoid operator and coil, refer to **15mm / 22mm / 30mm** solenoid range at the end of this chapter

Cover Screws (batch of 40)



Description	Order code
for DX1 valves	**JCVDX1**
for DX2 valves	**JCVDX2/3**
for DX3 valves	**JCVDX2/3**

Complete seal kit



Description	Order code
for DX1 valves	**JJDX15-A**
for DX2 valves	**JJDX25-A**
for DX3 valves	**JJDX35-A**

Tel: +45 63 12 83 00 | Email: ps@hymatik.com | www.hymatik.com | Hvidkaervej 27a, DK-5250 Odense SV, Denmark

ISO Valves - DX01 - DX02



For solenoid operator and coil, refer to **15mm** solenoid range at the end of this chapter

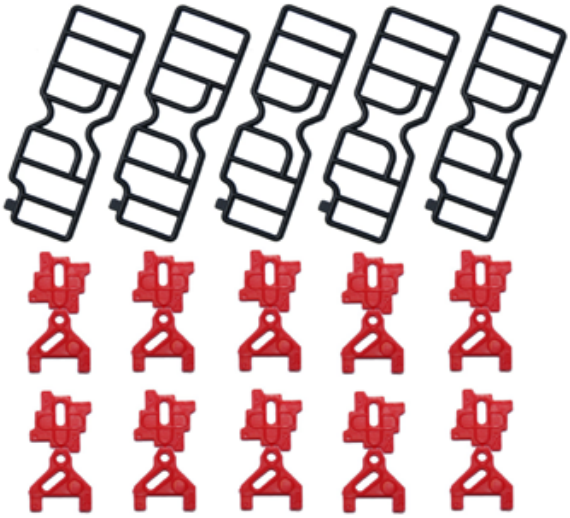

Description	Order code
Seal kit for DX01 x 5 valve to sub-base gasket x 10 pilot supply selector	**PPR-V63**

Parker Hannifin Corporation
Pneumatic Division - Europe

Tel: +45 63 12 83 00 | Email: ps@hymatik.com | www.hymatik.com | Hvidkaervej 27a, DK-5250 Odense SV, Denmark

Isys Micro



Valve Labels - Set of 10



Description	Order code
5/2 single solenoid	**PSM002E**
5/2 double solenoid	**PSM0022**
5/3 double solenoid	**PSM0025**
Dual 3/2 double solenoid NC/NC	**PSM002N**
Dual 3/2 double solenoid NO/NO	**PSM002P**
Dual 3/2 double solenoid NC/NO	**PSM002Q**

Solenoid kit



Description	Order code
24 VDC	**PSM0010**

Internal manifold seal plate (x1)



	Order code
	PSM0001
	PSM0002
	PSM0003
	PSM0004

Manifold to manifold M3 screws



Description	Order code
Set of 10 M3 screws	**PSM0014**

Valve to manifold gasket

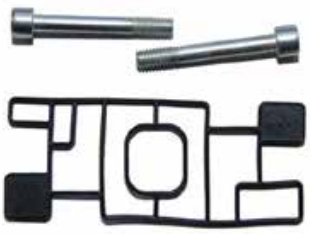

Description	Order code
Set of 5 gaskets and 10 screws	**PSM0012**

Manual override caps



Description	Order code
Set of 10	**PSM0011**

M7 plugs for auxilliary and pilot pressure ports



Description	Order code
Set of 10 M7 plugs	**PSM0013**

Moduflex Valves

Clips



x 2 for size 2

x 2 for head & Intermediate module

x 6 for size 1

Description	Order code
Set of 10 Clips	**P2M2K0CA**

External seal kit

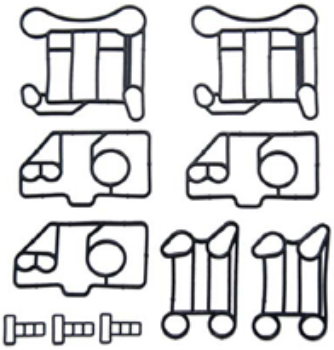

Description	Order code
x 2 under valve size 2 x 3 inter island subbase x 2 under valve size 1 x 3 under solenoid pilot	**P2M2K0JA**

Bus head module without module adaptor



Description	Order code
Profibus DP	**P2M2HBVP01600**
DeviceNet	**P2M2HBVD01600**
CANopen	**P2M2HBVC01600**

Head Clip Covers



Description	Order code
Set of 10 clips cover for head P2M2HXT01	**P2M2K0HA**



Valve Pilot



Description	Order code
Solenoid pilot - 24 VDC	**P2D8V32C5**
Pneumatic pilot	**P2M2K0PA**

Valve size 1 module without solenoid & without subbase



Description	Order code
4/2 single solenoid valve	**P2M1X4ES**
4/2 double solenoid valve	**P2M1X4EE**
Double 3/2 NC/NC valve	**P2M1XDEE**
Double 3/2 NO/NO valve	**P2M1XCEE**
Double 3/2 NC/NO valve	**P2M1XEEE**
Single 3/2 NC valve	**P2M1X3ES**
4/3 CE = double 3/2 NC/NC valve without exhaust check valve	**P2M1XGEE**

Valve size 2 module without solenoid & without subbase



Description	Order code
4/2 single solenoid valve	**P2M2X4ES**
4/2 double solenoid valve	**P2M2X4EE**
Double 3/2 NC/NC valve	**P2M2XDEE**
Double 3/2 NO/NO valve	**P2M2XCEE**
Double 3/2 NC/NO valve	**P2M2XEEE**
Single 3/2 NC valve	**P2M2X3ES**
4/3 CE = double 3/2 NC/NC valve without exhaust check valve	**P2M2XGEE**

Isolation forks



Description	Order code
Set of 10 for solenoid pilot manual override	**P2M2K0FA**

Tel: +45 63 12 83 00 | Email: ps@hymatik.com | www.hymatik.com | Hvidkaervej 27a, DK-5250 Odense SV, Denmark

PS1 Interface

On Interface 3/2 or 4/2 single solenoid

Description	Order code
Batch of 20 seals between valve bodies and 15mm solenoid or PVA-P111 connector	**PPR-V20**
Batch of 100 O-ring seals for pressure and exhaust commons	**PPR-L12**

On Interface 4/2 double solenoid

Description	Order code
Batch of 25 seals type A coming between valve body and 1 solenoid +25 seals type B coming between valve body and the other solenoid	**PPR-L13**

On head interface

Description	Order code
DIN rail clip assembly	**PPR-L09**

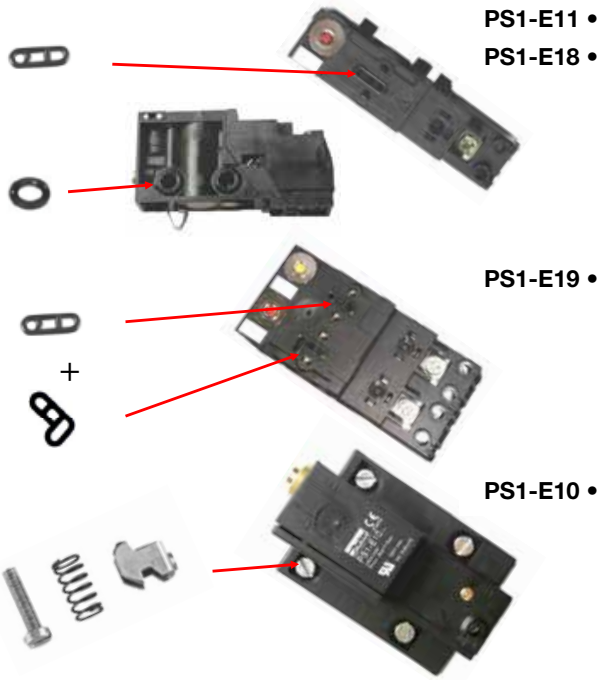

PS1-E11 •
PS1-E18 •

PS1-E19 •

PS1-E10 •

PVL Inline Valves



Spare mounting and assembly kits

	Description	Valve size	Port size	Order code
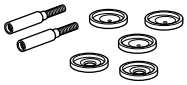	Kit for sealing the inlet/exhaust common gallery including : - 3 common blanking plugs - 2 drilled and threaded rods - 2 screws for extended tie rod	PVL-B		**PVL-B1901**
		PVL-C		**PVL-C1901**
	Pack of 10 common blanking	PVL-B		**PVL-B1902**
		PVL-C		**PVL-C1902**

Spare set of solenoid mounting screws

Type	Material	Ø (mm)	Length (mm)	Order code
Metric	Steel, passivated	M3	26	**P2E-KP026PM3***

* Sold by lot of 10 pieces

Valve series	**Gaskets**
PVL-A	**PPR-L21 obsolete**
PVL-B	**PPR-V20**
PVL-C	**PPR-V20**

Gaskets seal between pilot and valve body. Sold as one set of 20 gaskets.

Valve series	**Cross rods**
PVL-A	**PPR-V31 obsolete**
PVL-B	**PPR-V21**
PVL-C	**PPR-V22**

Used in valve stack mounting.
Sold as 1 set of 10 cross rods.

Valve series	**O-ring**
PVL-A	**PPR-V30 obsolete**
PVL-B	**PPR-V23**
PVL-C	**PPR-V24**

O-rings seal between stackable valve bodies. Sold as set of 30.

DIN rail clip assembly	**PPR-L09**

Assembly includes: clamp, screw and spring
Sold as set of 20.

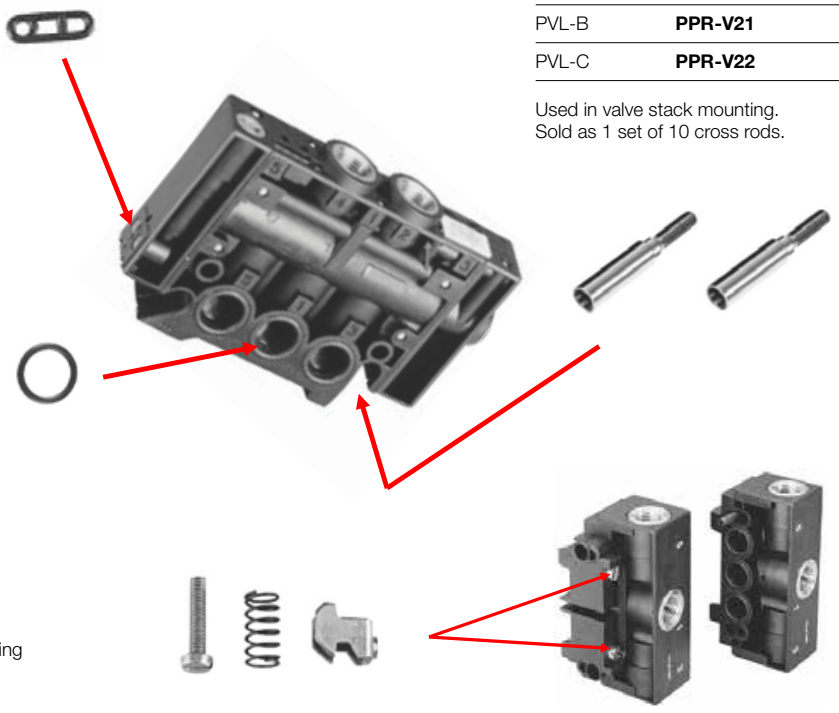

Tel: +45 63 12 83 00 | Email: ps@hymatik.com | www.hymatik.com | Hvidkaervej 27a, DK-5250 Odense SV, Denmark

PVLB10 & PVLC10 Valves

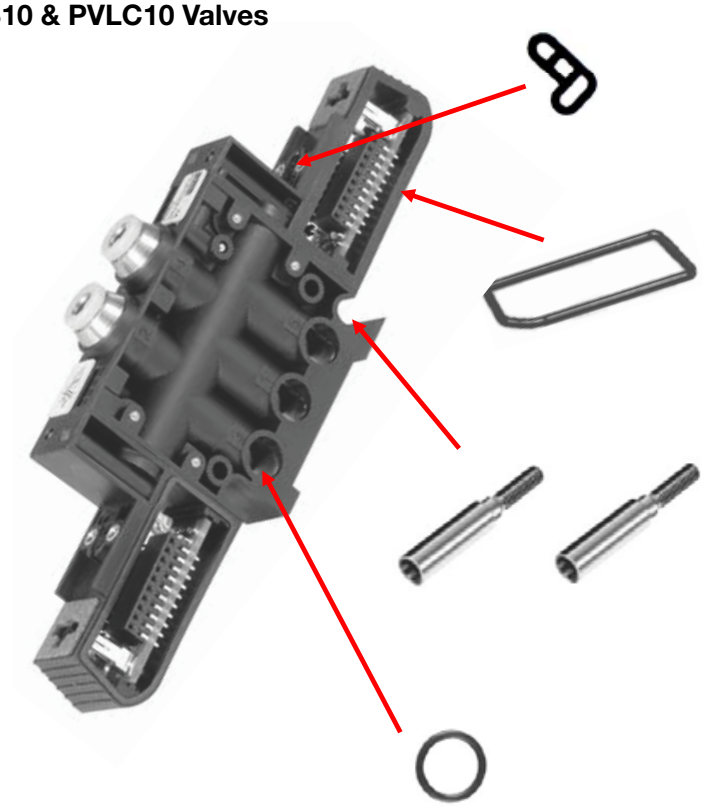

Valve series	O-rings
PVL-B10	**PPR-V41**
PVL-C10	**PPR-V41**

Gaskets seal between solenoid pilot and valve body. Sold as one set of 50 gaskets.

Valve series	O-rings
PVL-B10	**PPR-V38**
PVL-C10	**PPR-L36 Obsolete**

Connector gaskets provide protection for PC board and 20-Pin connector. PPRV38 sold as one set of 20 gaskets.

Valve series	Cross rods
PVL-B10	**PPR-V21**
PVL-C10	**PPR-V22**

Used in valve stack mounting. Sold as 1 set of 10 cross rods.

Valve series	O-rings
PVL-B10	**PPR-V23**
PVL-C10	**PPR-V24**

O-rings seal between stackable valve bodies. Sold in set of 30.

PVD Everdure Ceramic Valves

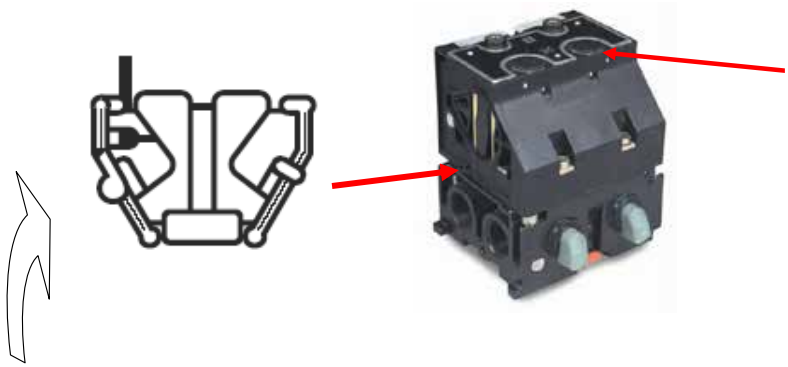



Set of 20 blanking plugs **PPR-V27**



Set of 20 gaskets for mounting between power valves and solenoid actuators **PPR-V20**

	Valve 4/2			Valve 3/2		Valve 2/2	
For mounting	Size 1/8	Size 1/4	Size 1/2	Size 1/4	Size 1/2	Size 1/4	Size 1/2
Between subbase	**PVU-B14xx**	**PVU-C34xx**	**PVU-E14xx**	**PVU-C33xx**	**PVU-E13xx**	**PVU-C32xx**	**PVU-E12xx**
and power valve	**PVD-B14xx**	**PVD-C34xx**	**PVD-E24xx**	**PVS-C33xx**	**PVS-E23xx**	**PVP-C32xx**	**PVP-E22xx**
Batch of 10 gaskets	**PVR-V02**	**PVR-V28**	**PPR-V04**	**PPR-V29**	**PPR-V06**	**PPR-V29**	**PPR-V06**

For mounting	Size 1/8	Size 1/4	Size 1/2
Between subbase	**PVU-Bxxxx**	**PVU-Cxxxx**	**PVU-Exxxx**
Batch of 30 O-ring	**PVR-V07**	**PVR-V08**	**PPR-V09**

20 O-ring seals for ports 1 and 3

+

10 O-ring seals for px port



Logic Processing



Inter module locks

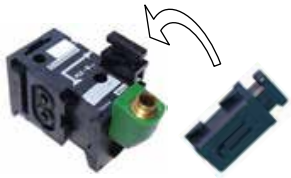

Description	Order code
Batch of 50	**PPR-L06**

For components

PLE-B12 **PLL-B12**
PLK-B12 **PLN-B12**

Circuit selectors for combinable logic elements

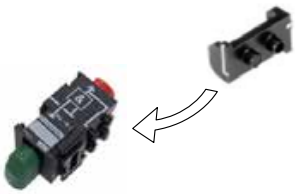

Description	Order code
Batch of 50	**PPR-L10**

For components

PLL-B12 **PLN-B12**
PLK-B12

O-rings for subbase mounted



Description	Order code
Batch of 100 (10 + 90)	**PPR-L04**
10 O-rings for port with filter	
90 O-rings for port wihtout filter	

For components

PLJ-C10 **PLK-C10** **PLN-C10** **PLL-C10**
PLN-D10 **PRF-A10** **PRT • • •**

Rail clamping components



Description	Order code
Batch of 20	**PPR-L09**

For components

PSE-A12

Exhaust filter



Exhaust Filter

Batch of 20	**PPR-L20**

Input filter

Batch of 20	**PPR-L23**

For components

PRT • • •

O-rings for sequencer components and combinable logic elements



Description	Order code
Batch of 100	**PPR-L11**
10 O-rings for port with filter	
90 O-rings for port wihtout filter	

For components

PLL-B12 **PLE-B12** **PSD-B12** **PLK-B12**
PSB-A12 **PSM-A12** **PLN-B12** **PSD-A12**
PSE-A12

Parker Hannifin Corporation
Pneumatic Division - Europe

Tel: +45 63 12 83 00 | Email: ps@hymatik.com | www.hymatik.com | Hvidkaervej 27a, DK-5250 Odense SV, Denmark

Logic Processing

Plugs for 3 or 4 port subbases

Description	Order code
Batch of 50	**PPR-L05**



Inter module locks for 3 or 4 port subbases

Description	Order code
Batch of 50	**PPR-L07**
For components	
PZU-A12	**PZU-B12**
PZU-C12	

Flat gaskets for step module and Interlock module



Description	Order code
Batch of 10	**PPR-L01**
For components	
PSB-A12	**PSM-A12**
PSV-A12	

Flat gaskets for 4 port subbases



Description	Order code
Batch of 10	**PPR-L02**
For components	
PZU-B12	**PLM-A12**
PRD-A12	

Clear plastic window



Description	Order code
Batch of 10	**PPR-X01**
For components	
PXV-F • • •	

Mylar diaphragms for amplifier relays

Description	Order code
Batch of 10	**PPR-L08**
For components	
PRD-A12	**PRD-A12**

Parker Hannifin Corporation
Pneumatic Division - Europe

Tel: +45 63 12 83 00 | Email: ps@hymatik.com | www.hymatik.com | Hvidkaervej 27a, DK-5250 Odense SV, Denmark

PXB Control & Process Duty





PXB-B1XXX **PXB-B2XXX**



Ø 4mm Instant straight connections

Normally non passing (NNP)		**PXB-B1911**	**PXB-B2911**
Normally passing (NP)		**PXB-B1921**	**PXB-B2921**



M5 thread connections

Normally non passing (NNP)		**PXB-B1915**	**PXB-B2915**
Normally passing (NP)		**PXB-B1925**	**PXB-B2925**



Ø 6mm Instant straight connections

Normally non passing (NNP)		**PXB-B1916**	**PXB-B2916**
Normally passing (NP)			**PXB-B2926**



Ø 4mm Instant swivel connections

Normally non passing (NNP)		**PXB-B1912**	**PXB-B2912**
Normally passing (NP)		**PXB-B1922**	**PXB-B2922**



Electrical switch bodies

Normally Open (NO)		**ZB2-BE101**
Normally Closed (NC)		**ZB2-BE102**

Parker Hannifin Corporation
Pneumatic Division - Europe

Tel: +45 63 12 83 00 | Email: ps@hymatik.com | www.hymatik.com | Hvidkaervej 27a, DK-5250 Odense SV, Denmark

P2E Solenoid Operators

Spare Parts



P2E-XXXXXX

			Used for :
	50 + 50 Ref	: **PPR-L35**	DX01 / DX02
	X20 Ref X250 Ref	: **PPR-V20** : **PPR-L18**	PS1 (3/2) / PVL / PVD / P2V / P2L
	25 + 25 Ref	: **PPR-L13**	PS1 (4/2) / P25 / PVL-B10 / PVL-C10
	X50 Ref	: **PPR-V41**	PS1 (4/2) / P2S / PVL-B10 / PLV-C10
	X10 Ref	: **P2LXSK1**	P2L-A / P2LAX / P2LBX / P2LCX / P2LDX
	Metric M3 26mm length (material : steel) X10 Ref	: **P2E-KP026PM3**	PS1 / PVL / PVD-B / DX01 / DX02
	Self tapping O3 26,2mm length (stainless steel) X10 Ref	: **P2E-KD027SS3**	P2L-A / P2LAX / P2LBX / P2LCX / P2LDX

Parker Hannifin Corporation
Pneumatic Division - Europe

Tel: +45 63 12 83 00 | Email: ps@hymatik.com | www.hymatik.com | Hvidkaervej 27a, DK-5250 Odense SV, Denmark

15mm Solenoid Operators

Electrical connection EN175301-803 C/ISO15217 (Ex DIN 43650C)

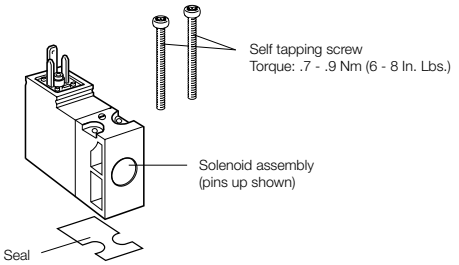

Solenoids 15 mm NC, standard

(Note! Mounting screws included in basic valve)

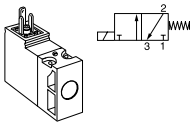

Voltage	Weight Kg	Order code Without manual override	Weight Kg	Order code Override, blue, non locking flush	Weight Kg	Order code Override, yellow, locking flush
12 VDC	0,038	**P2E-KV32B0**	0,038	**P2E-KV32B1**	0,038	**P2E-KV32B2**
24 VDC	0,038	**P2E-KV32C0**	0,038	**P2E-KV32C1**	0,038	**P2E-KV32C2**
48 VDC	0,038	**P2E-KV32D0**	0,038	**P2E-KV32D1**	0,038	**P2E-KV32D2**
24 VAC 50Hz	0,038	**P2E-KV31C0**	0,038	**P2E-KV31C1**	0,038	**P2E-KV31C2**
48 VAC 50/60Hz	0,038	**P2E-KV34D0**	0,038	**P2E-KV34D1**	0,038	**P2E-KV34D2**
115 VAC 50Hz/ 120 VAC 60Hz	0,038	**P2E-KV31F0**	0,038	**P2E-KV31F1**	0,038	**P2E-KV31F2**
230 VAC 50Hz/ 240 VAC 60Hz	0,038	**P2E-KV31J0**	0,038	**P2E-KV31J1**	0,038	**P2E-KV31J2**

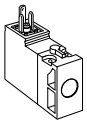

Voltage	Weight Kg	Order code Override extended, blue, non locking flush	Weight Kg	Order code Override extended, yellow, locking flush
24 VDC	0,038	**P2E-KV32C3**	0,038	**P2E-KV32C4**
24 VAC 50Hz	0,038	**P2E-KV31C3**	0,038	**P2E-KV31C4**

Solenoids 15 mm NC, mobile

(Note! Mounting screws included in basic valve)

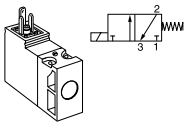

Voltage	Weight Kg	Order code Without manual override	Weight Kg	Order code Override, blue, non locking flush
12 VDC	0,038	**P2E-MV35B0**	0,038	**P2E-MV35B1**
24 VDC	0,038	**P2E-MV35C0**	0,038	**P2E-MV35C1**
37,5 VDC	0,038	**P2E-MV35W0**	0,038	**P2E-MV35W1**
48 VDC	0,038	**P2E-MV35D0**	0,038	**P2E-MV35D1**
72 VDC	0,038	**P2E-MV35T0**	0,038	**P2E-MV35T1**
78 VDC	0,038	**P2E-MV35Y0**	0,038	**P2E-MV35Y1**
96 VDC	0,038	**P2E-MV35V0**	0,038	**P2E-MV35V1**
110 VDC	0,038	**P2E-MV35E0**	0,038	**P2E-MV35E1**

Solenoids 15 mm NC, food industry version

(Note! Mounting screws included in basic valve)

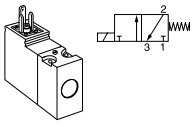

Voltage	Weight Kg	Order code Without manual override	Weight Kg	Order code Override, blue, non locking flush	Weight Kg	Order code Override, yellow, locking flush
24 VDC	0,038	**P2E-QV32C0**	0,038	**P2E-QV32C1**	0,038	**P2E-QV32C2**
48 VDC	0,038	**P2E-QV32D0**	0,038	**P2E-QV32D1**	0,038	**P2E-QV32D2**
24 VAC 50Hz	0,038	**P2E-QV31C0**	0,038	**P2E-QV31C1**	0,038	**P2E-QV31C2**
48 VAC 50/60Hz	0,038	**P2E-QV34D0**	0,038	**P2E-QV34D1**	0,038	**P2E-QV34D2**
115 V 50Hz/ 120 V 60Hz	0,038	**P2E-QV31F0**	0,038	**P2E-QV31F1**	0,038	**P2E-QV31F2**
230 VAC 50Hz/ 240 VAC 60Hz	0,038	**P2E-QV31J0**	0,038	**P2E-QV31J1**	0,038	**P2E-QV31J2**

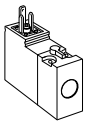

Voltage	Weight Kg	Order code Override extended, blue, non locking flush	Weight Kg	Order code Override extended, yellow, locking flush
24 VDC	0,038	**P2E-QV32C3**	0,038	**P2E-QV32C4**
24 VAC 50Hz	0,038	**P2E-QV31C3**	0,038	**P2E-QV31C4**
115 VAC 50 Hz	0,038	**P2E-QV31F3**	0,038	**P2E-QV31F4**
230 VAC 50 Hz	0,038	**P2E-QV31J3**	0,038	**P2E-QV31J4**

In accordance with the EU Machine Directive, EN 983, solenoid valves with manual override should have spring-return operating arms for safety.

Tel: +45 63 12 83 00 | Email: ps@hymatik.com | www.hymatik.com | Hvidkaervej 27a, DK-5250 Odense SV, Denmark

Solenoid Operators 22 mm

Solenoid coils for 22mm solenoid operators

Voltage	Order code Form A	Weight (Kg)	Order code Form B	Weight (Kg)
12V 60Hz			**P2FCB440**	0.093
24V 50/60Hz			**P2FCB442**	0.093
12V DC			**P2FCB445**	0.093
12V DC Mobile	**P2FCA447**	0.17	**P2FCB447**	0.093
24v DC Mobile	**P2FCA448**	0.17	**P2FCB448**	0.093
24V DC			**P2FCB449**	0.093
24V DC Low power			**P2FCB249**	0.093
48V DC			**P2FCB451**	0.093
110V/50Hz, 120V/60Hz			**P2FCB453**	0.093
230V/50Hz, 230V/60Hz			**P2FCB457**	0.093

Note: Mobile solenoids are only suitable for Viking Xtreme valves with 'H' specification having 0,8/1,0 operator type P2FP13H4D

Spare Solenoid Nuts

Valves requiring captured exhaust should be fitted with plastic knurled nut

Order code
P2FNP

Valves with vented exhaust are fitted with diffuser plastic nut

Order Code
P2FND

Spare Solenoid Operators

Solenoid pilot operator 22mm NC, Normal duty (Max Operating pressure 10bar, Temp –10°C to +50°C)

Order code (with locking bi-stable m/o)	Weight Kg	**Order code** (with Non-locking monostable m/o)	Weight Kg
P2FP13N4C	0.05kg	**P2FP13N4D**	0.05kg

Low power pilot operator NC, Normal duty (Max Operating pressure 10bar, Temp –10°C to +50°C)

Order code (with locking bi-stable m/o)	Weight Kg	**Order code** (with Non-locking monostable m/o)	Weight Kg
P2FP13N2C	0.05kg	**P2FP13N2D**	0.05kg

Solenoid pilot operator 22mm NC, Xtreme duty (Max Operating pressure 16bar, Temp –40°C to +60°C)

Order code (with Non-locking (monostable m/o)	Weight Kg
P2FP13H4D	0.05kg

Note.

Solenoid pilot operators are fitted to the Viking valve range.

Order the above part numbers for spares.

The operators are supplied with mounting screws and interface 'O' rings.

Coils and connectors must be ordered separately.

Tel: +45 63 12 83 00 | Email: ps@hymatik.com | www.hymatik.com | Hvidkaervej 27a, DK-5250 Odense SV, Denmark

Solenoid Operators CNOMO

Solenoid coils with Din A or Industrial connection

Voltage	Order code Din A Standard 30 x 30	Weight (kg)	Order code Din A Mobile 30 x 30	Weight (kg)	Order code Industrial standard 22 x 30	Weight (kg)
Direct current						
12V DC	**P2FCA445**	0.105	**P2FCA447**	0.105	**P2FCB445**	0.093
24V DC	**P2FCA449**	0.105	**P2FCA448**	0.105	**P2FCB449**	0.093
48V DC	**P2FCA453***	0.105	**P2FCA474**	0.105	**P2FCB451**	0.093
72V DC			**P2FCA470**	0.105		
96V DC			**P2FCA471**	0.105		
110V DC			**P2FCA472**	0.105		
Alternative current						
12V 50/60Hz	**P2FCA440**	0.105			**P2FCB440**	0.093
24V 50/60Hz	**P2FCA442**	0.105			**P2FCB442**	0.093
48V 50/60Hz	**P2FCA469#**	0.105				
110V 50Hz, 120V 60Hz	**P2FCA453**	0.105			**P2FCB453**	0.093
230V 50Hz, 230V 60Hz	**P2FCA457**	0.105			**P2FCB457**	0.093

* P2FCA453 is compatible with 110 V AC and 48 V DC

\# P2FCA469 is 24 V DC 6.8W or 48 V 50Hz 9.9 VA

Solenoid coils with M12 connection

Voltage	Order code 30 x 30	Weight (kg)	Order code 22 x 30	Weight (kg))
Direct current				
24V DC	**P2FC6419**	0.065	**P2FC7419**	0.065

Spare Solenoid Nuts

Valves requiring captured exhaust should be fitted with plastic knurled nut	Valves with vented exhaust are fitted with diffuser plastic nut
Order code	**Order Code**
P2FNP	**P2FND**

Spare Solenoid Operators

Solenoid pilot operator CNOMO NC

Description	Order code No manual override	Weight (kg)	Order code Non-lock manual override	Weight (kg)	Order code Locking manual override	Weight (kg)
Standard duty	**P2FP23N4A**	0.065	**P2FP23N4B**	0.065	**P2FP23N4C**	0.065
Mobile metal	**P2FP43M4A**	0.1	**P2FP43M4B**	0.1	**P2FP43M4C**	0.1

Note.
The operators are supplied with mounting screws and interface 'O' rings.
Coils and connectors must be ordered separately.

Tel: +45 63 12 83 00 | Email: ps@hymatik.com | www.hymatik.com | Hvidkaervej 27a, DK-5250 Odense SV, Denmark

Parker Hannifin Corporation
Pneumatic Division - Europe

Tel: +45 63 12 83 00 | Email: ps@hymatik.com | www.hymatik.com | Hvidkaervej 27a, DK-5250 Odense SV, Denmark







Air Preparation & Airline Accessories

Moduflex FRLs



P3H - Filters / Filter Regulator

Service kits

Description	Order code
5 micron element kit	**P3HKA00ESE**

Coalescing Filters + Adsorbers

Description	Order code
0.01 micron coalescing element kit	**P3HKA00ESC**
Adsorber element kit	**P3HKA00ESA**

Service kits

Description	Order code
Connector O'ring spares kit (pk of 5)	**P3HKA02CY**
Metal Clip retainer kit (pk of 10)	**P3HKA00CJ**

P3K - Filters / Filter Regulator

Service kits

Description	Order code
5 micron element kit	**P3KKA00ESE**
40 micron element kit	**P3KKA00ESG**

Coalescing Filters + Adsorbers

Description	Order code
0.01 micron coalescing element kit	**P3KKA00ESC**
Adsorber element kit	**P3KKA00ESA**

Service kits

Description	Order code
Connector O'ring spares kit (pk of 5)	**P3KKA04CY**
Metal Clip retainer kit (pk of 10)	**P3KKA00CJ**

P3M - Filters / Filter Regulator

Service kits

Description	Order code
5 micron element kit	**P3MKA00ESE**

Coalescing Filters + Adsorbers

Description	Order code
0.01 micron coalescing element kit	**P3MKA00ESC**
Adsorber element kit	**P3MKA00ESA**

Service kits

Description	Order code
Connector O'ring spares kit (pk of 5)	**P3MKA08CY**
Metal Clip retainer kit (pk of 10)	**P3MKA00CJ**

Tel: +45 63 12 83 00 | Email: ps@hymatik.com | www.hymatik.com | Hvidkaervej 27a, DK-5250 Odense SV, Denmark

Modular Hi Flow FRLs



Filters

Filter Element Kits

Description	Order code
5 Micron element	**P3NKA00ESE**
40 Micron element	**P3NKA00ESG**

Filter Spare Kits

Description	Order code
Manual drain kit	**P3E-KA00DBN**
Auto drain kit	**P3E-KA00DDN**

Filter Regulators

Filter/Regulator Spare Kits

Description	Order code
5 Micron element	**P3NKA00ESE**
40 Micron element	**P3NKA00ESG**
Repair kit (self-relieving)	**P3NKA00RR**
Repair kit (non-relieving)	**P3NKA00RN**

Regulators

Regulator Spare Kits

Description	Order code
Repair kit (self-relieving)	**P3NKA00RR**
Repair kit (non-relieving)	**P3NKA00RN**

Coalescing Filters

Filter Element Kits

Description	Order code
Coalescing element	**P3NKA00ESC**
Adsorber element	**P3NKA00ESA**

Tel: +45 63 12 83 00 | Email: ps@hymatik.com | www.hymatik.com | Hvidkaervej 27a, DK-5250 Odense SV, Denmark

Global FRLs

Mini Particulate Filter P31

Repair and Service Kits

Plastic bowl / Bowl guard manual drain	**P31KA00BGM**
Metal bowl / w/o sight gauge manual drain	**P31KA00BMM**
Plastic bowl / Bowl guard pulse drain	**P31KA00BGB**
Metal bowl / w/o sight gauge pulse drain	**P31KA00BMB**
5µ particle filter element	**P31KA00ESE**
C-Bracket (fits to body)	**P31KA00MW**

Compact Particulate Filter P32

Repair and Service Kits

Plastic bowl / Bowl guard manual drain	**P32KA00BGM**
Metal bowl / Sight gauge manual drain	**P32KA00BSM**
Auto drain	**P32KA00DA**
5µ particle filter element	**P32KA00ESE**

Standard Particulate Filter P33

Repair and Service Kits

Plastic bowl / Bowl guard manual drain	**P33KA00BGM**
Metal bowl / Sight gauge manual drain	**P33KA00BSM**
Auto drain	**P32KA00DA**
5µ particle filter element	**P33KA00ESE**

Mini Coalescing and Adsorber Filters P31

Repair and Service Kits

Plastic bowl / Bowl guard manual drain	**P31KA00BGM**
Metal bowl / w/o sight gauge manual drain	**P31KA00BMM**
Plastic bowl / Bowl guard pulse drain	**P31KA00BGB**
Metal bowl / w/o sight gauge pulse drain	**P31KA00BMB**
1µ coalescing filter element	**P31KA00ES9**
0.01µ coalescing filter element	**P31KA00ESC**
Activated carbon adsorber filter element	**P31KA00ESA**

Compact Coalescing and Adsorber Filter P32

Repair and Service Kits

Plastic bowl / Bowl guard manual drain	**P32KA00BGM**
Metal bowl / Sight gauge manual drain	**P32KA00BSM**
Auto drain	**P32KA00DA**
1µ coalescing filter element	**P32KA00ES9**
0.01µ coalescing filter element	**P32KA00ESC**
Activated carbon adsorber filter element	**P32KA00ESA**
Differential pressure indicator (replacement)	**P32KA00RQ**

Standard Coalescing and Adsorber Filter P33

Repair and Service Kits

Plastic bowl / Bowl guard manual drain	**P33KA00BGM**
Metal bowl / Sight gauge manual drain	**P33KA00BSM**
Auto drain	**P32KA00DA**
1µ coalescing filter element	**P33KA00ES9**
0.01µ coalescing filter element	**P33KA00ESC**
Activated carbon adsorber filter element	**P33KA00ESA**
Differential pressure indicator (replacement)	**P32KA00RQ**

Mini Regulator P31

Repair and Service Kits

Regulator repair kit - Relieving	**P31KA00RB**
Regulator repair kit - Non-relieving	**P31KA00RC**

Mini Common - P1 Regulator P31

Repair and Service Kits

Regulator repair kit - Relieving	**P31KA00RB**
Regulator repair kit - Non-relieving	**P31KA00RC**

Compact Regulator P32

Repair and Service Kits

Regulator repair kit - Relieving	**P32KA00RB**
Regulator repair kit - Non-relieving	**P32KA00RC**

Compact Common P1 Regulator P32

Repair and Service Kits

Regulator repair kit - Relieving	**P32KA00RB**
Regulator repair kit - Non-relieving	**P32KA00RC**

Tel: +45 63 12 83 00 | Email: ps@hymatik.com | www.hymatik.com | Hvidkaervej 27a, DK-5250 Odense SV, Denmark

Global FRLs

Standard Regulator P33

Repair and Service Kits

Regulator repair kit - Relieving	**P33KA00RB**
Regulator repair kit - Non-relieving	**P33KA00RC**

Compact Filter / Regulator P32

Repair and Service Kits

Plastic bowl / Bowl guard manual drain	**P32KA00BGM**
Metal bowl / Sight gauge manual drain	**P32KA00BSM**
Auto drain	**P32KA00DA**
5µ particle filter element	**P32KA00ESE**
Regulator repair kit - Relieving	**P32KA00RB**
Regulator repair kit - Non-relieving	**P32KA00RC**

Mini Lubricator - P31

Repair and Service Kits

Plastic bowl / Bowl guard no drain	**P31KA00BGN**
Metal bowl / w/o sight gauge no drain	**P31KA00BSN**
Drip control assembly	**P31KA00PG**
Lubricator Oil - VG15:ISO 3448 - 100ml	**P3XKA00PPA**
Lubricator Oil - VG32 - 1 litre	**P3YKA00PPBB**

Standard Lubricator - P33

Repair and Service Kits

Plastic bowl / Bowl guard no drain	**P33KA00BGN**
Metal bowl / Sight gauge no drain	**P33KA00BSN**
Drip control assembly	**P32KA00PG**
Lubricator Oil - VG15:ISO 3448 - 100ml	**P3XKA00PPA**
Lubricator Oil - VG32 - 1 litre	**P3YKA00PPBB**

Mini Filter / Regulator P31

Repair and Service Kits

Plastic bowl / Bowl guard manual drain	**P31KA00BGM**
Metal bowl / w/o sight gauge manual drain	**P31KA00BMM**
Plastic bowl / Bowl guard pulse drain	**P31KA00BGB**
Metal bowl / w/o sight gauge pulse drain	**P31KA00BMB**
5µ particle filter element	**P31KA00ESE**
Regulator repair kit - Relieving	**P31KA00RB**
Regulator repair kit - Non-relieving	**P31KA00RC**

Standard Filter / Regulator P33

Repair and Service Kits

Plastic bowl / Bowl guard manual drain	**P33KA00BGM**
Metal bowl / Sight gauge manual drain	**P33KA00BSM**
Auto drain	**P33KA00DA**
5µ particle filter element	**P33KA00ESE**
Regulator repair kit - Relieving	**P33KA00RB**
Regulator repair kit - Non-relieving	**P33KA00RC**

Compact Lubricator - P32

Repair and Service Kits

Plastic bowl / Bowl guard no drain	**P32KA00BGN**
Metal bowl / Sight gauge no drain	**P32KA00BSN**
Drip control assembly	**P32KA00PG**
Lubricator Oil - VG15:ISO 3448 - 100ml	**P3XKA00PPA**
Lubricator Oil - VG32 - 1 litre	**P3YKA00PPBB**

Spare Solenoid Operators

Solenoid pilot operator CNOMO NC

Description	**Order code** Non-lock manual override	Weight (Kg)
Standard duty	**P2FP23N4B**	0.065

Note.

Solenoid pilot operators are fitted to the Global range.
Order the above part numbers for spares.
The operators are supplied with mounting screws and interface 'O' rings.
Coils and connectors must be ordered separately.

Spare Solenoid Nuts

Valves requiring captured exhaust should be fitted with plastic knurled nut

Order code
P2FNP

Valves with vented exhaust are fitted with diffuser plastic nut

Order code
P2FND

Parker Hannifin Corporation
Pneumatic Division - Europe

Tel: +45 63 12 83 00 | Email: ps@hymatik.com | www.hymatik.com | Hvidkaervej 27a, DK-5250 Odense SV, Denmark

P3L FRLs



Filters

Repair and Service kits

Description	Order code
Plastic bowl / semi auto drain	**P3LKA00BPS**
5µ particle filter element	**P3LKA00ESE**
40µ particle filter element	**P3LKA00ESG**
Individual mounting bracket - P3LFA / P3LLA	**P3LKA00MW**

Coalescing / Adsorber Filters

Repair and Service kits

Description	Order code
Plastic bowl / manual push drain Coalescing	**P3LKA00BPP1**
Plastic bowl / manual push drain Adsorber	**P3LKA00BPP2**
0.01µ coalescing filter element	**P3LKA00ESC**
Activated carbon adsorber filter element	**P3LKA00ESA**
Individual mounting bracket - P3LFA / P3LLA	**P3LKA00MW**

Regulators

Repair and Service kits

Description	Order code
Panel mount nut - Aluminium	**P3LKA00MM**
Panel mount nut - Plastic	**P3LKA00MP**
Angle bracket (uses panel mount threads)	**P3LKA00MR**

Filter Regulators

Repair and Service kits

Description	Order code
Plastic bowl / semi auto drain	**P3LKA00BPS**
5µ particle filter element	**P3LKA00ESE**
40µ particle filter element	**P3LKA00ESG**
Panel mount nut - Aluminium	**P3LKA00MM**
Panel mount nut - Plastic	**P3LKA00MP**
Angle bracket (uses panel mount threads)	**P3LKA00MR**

Lubricators

Repair and Service kits

Description	Order code
Plastic bowl - no drain	**P3LKA00BPN**
Lubricator Oil - VG32 - 1 litre	**P3YKA00PPBB**

Tel: +45 63 12 83 00 | Email: ps@hymatik.com | www.hymatik.com | Hvidkaervej 27a, DK-5250 Odense SV, Denmark

P3X FRLs



Filters

Service kits

Description	Order code
5 micron element kit	**P3XKA00ESE**
40 micron element kit	**P3XKA00ESG**
Bowl kit with combines manual/semi auto drain	**P3XKA00BSC**
Bowl kit with auto drain	**P3XKA00BSA**
1 micron element kit	**P3XKA00ES9**

Coalescing Filters

Service kits

Description	Order code
0.01 micron coalescing element kit	**P3XKA00ESC**
Bowl kit with combines manual/semi auto drain	**P3XKA00BSC**
Bowl kit with auto drain	**P3XKA00BSA**
Differential pressure indicator kit	**P3XKA00RQ**

Adsorbers

Service kits

Description	Order code
Adsorber element kit	**P3XKA00ESA**
Bowl kit with manual drain	**P3XKA00BSC**

Filter Regulators

Service kits

Description	Order code
5 micron element kit	**P3XKA00ESE**
40 micron element kit	**P3XKA00ESG**
Bowl kit with combined manual/semi auto drain	**P3XKA00BSC**
Bowl kit with auto drain	**P3XKA00BSA**
Diaphragm kit (relieving type)	**P3XKA00RR**
Diaphragm kit (non-relieving type)	**P3XKA00RN**

Regulators

Service kits

Description	Order code
Diaphragm kit (relieving type)	**P3XKA00RR**
Diaphragm kit (non-relieving type)	**P3XKA00RN**

Lubricators

Service kits

Description	Order code
Bowl kit	**P3XKA00BSN**
Refill plug	**P3XKA00PL**
Oil VG15 - 100 ml	**P3XKA00PPA**

Parker Hannifin Corporation
Pneumatic Division - Europe

Tel: +45 63 12 83 00 | Email: ps@hymatik.com | www.hymatik.com | Hvidkaervej 27a, DK-5250 Odense SV, Denmark

P3Y FRLs



Filters

Service kits

Description	Order code
5 micron element kit	**P3YKA00ESE**
40 micron element kit	**P3YKA00ESG**
Bowl kit with combined manual/semi auto drain	**P3YKA00BSC**
Bowl kit with auto drain	**P3YKA00BSA**

Dust Filters

Service kits

Description	Order code
1 micron coalescing element kit	**P3YKA00ES9**
Bowl kit with combined manual/semi auto drain	**P3YKA00BSC**
Bowl kit with auto drain	**P3YKA00BSA**

Coalescing Filters

Service kits

Description	Order code
0.01 micron coalescing element kit	**P3YKA00ESC**
Bowl kit with combined manual/semi auto drain	**P3YKA00BSC**
Bowl kit with auto drain	**P3YKA00BSA**
Differential pressure indicator kit	**P3YKA00RQ**

Adsorbers

Service kits

Description	Order code
Adsorber element kit	**P3YKA00ESA**
Bowl kit with manual / semi-auto drain	**P3YKA00BSC**

Regulators

Service kits

Description	Order code
Diaphragm kit (relieving type)	**P3YKA00RR**
Diaphragm kit (non-relieving type)	**P3YKA00RN**

Filter Regulators

Service kits

Description	Order code
5 micron element kit	**P3YKA00ESE**
40 micron element kit	**P3YKA00ESG**
Bowl kit with combined manual/semi auto drain	**P3YKA00BSC**
Bowl kit with auto drain	**P3YKA00BSA**
Diaphragm kit (relieving type)	**P3YKA00RR**
Diaphragm kit (non-relieving type)	**P3YKA00RN**

Lubricators

Service kits

Description	Order code
Bowl kit	**P3YKA00BSN**
Refill plug	**P3YKA00PL**
Lubricator Oil	**P3YKA00PPBB**

Tel: +45 63 12 83 00 | Email: ps@hymatik.com | www.hymatik.com | Hvidkaervej 27a, DK-5250 Odense SV, Denmark

P3Z FRLs



Filters / Dust Filters

Service kits

Description	Order code
5 micron element kit	**P3ZKA00ESE**
40 micron element kit	**P3ZKA00ESG**
1 micron element kit	**P3ZKA00ES9**

Coalescing / Adsorber Filters

Service kits

Description	Order code
0.01 micron coalescing element kit	**P3ZKA00ESC**
Adsorber element kit	**P3ZKA00ESA**
Differential pressure indicator kit	**P3ZKA00RQ**

Regulator / Pilot Regulator

Service kits

Description	Order code
Diaphragm kit (relieving type)	**P3ZKA00RR**

Lubricators

Service kits

Description	Order code
Drip control housing	**P3ZKA00PG**

Parker Hannifin Corporation
Pneumatic Division - Europe

Tel: +45 63 12 83 00 | Email: ps@hymatik.com | www.hymatik.com | Hvidkaervej 27a, DK-5250 Odense SV, Denmark

High Flow Precision Regulators



R210 / R220 Regulator Kits & Accessories

Mounting Bracket Kits

Pipe Mounting **SA200YW57**
Right Angle Mounting **446-707-045**

Service Kits

0.13 to 2.7 bar **RKR210A**
0.13 to 8.2 bar **RKR210C**
0.13 to 8.2 bar (High Relieving)..... **RKR220C**

R230 Regulator Kits & Accessories

Mounting Bracket Kit **446-707-025**

Service Kits – Relieving

0 to 0.13 bar **RKR230E**
0 to 2 bar **RKR230B**
0 to 4 bar **RKR230C**
0 to 10 bar **RKR230D**

PXP Two Hand Safety Control Units



Spare parts for two-hand control units

Description	Base component	**Order code**
1 guard for two-hand control	PXP-C111 PXP-D121	**PPR-L15**
1 set of 50 spring retaining clips		**PPR-W01**
1 guard for two hand control		**PPR-L15**
Control module		**PXP-A11**
Push button Black		**ZB4-BR2**
Push button Green		**ZB4-BR3**
Push button Red		**ZB4-BR4**

* These units are indispensable for ensuring that both operator's hands are occupied for reasons of safety. Both push-buttons must be operated simultaneously to produce an output signal.

** Conforming to french standard NFE 09-036 " Pneumatic synchronous two-hand controls".

Tel: +45 63 12 83 00 | Email: ps@hymatik.com | www.hymatik.com | Hvidkaervej 27a, DK-5250 Odense SV, Denmark

Parker Hannifin Corporation
Pneumatic Division - Europe

Tel: +45 63 12 83 00 | Email: ps@hymatik.com | www.hymatik.com | Hvidkaervej 27a, DK-5250 Odense SV, Denmark

Parker Worldwide

Europe, Middle East, Africa

AE – United Arab Emirates, Dubai
Tel: +971 4 8127100
parker.me@parker.com

AT – Austria, Wiener Neustadt
Tel: +43 (0)2622 23501-0
parker.austria@parker.com

AT – Eastern Europe, Wiener Neustadt
Tel: +43 (0)2622 23501 900
parker.easteurope@parker.com

AZ – Azerbaijan, Baku
Tel: +994 50 2233 458
parker.azerbaijan@parker.com

BE/LU – Belgium, Nivelles
Tel: +32 (0)67 280 900
parker.belgium@parker.com

BG – Bulgaria, Sofia
Tel: +359 2 980 1344
parker.bulgaria@parker.com

BY – Belarus, Minsk
Tel: +48 (0)22 573 24 00
parker.poland@parker.com

CH – Switzerland, Etoy
Tel: +41 (0)21 821 87 00
parker.switzerland@parker.com

CZ – Czech Republic, Klecany
Tel: +420 284 083 111
parker.czechrepublic@parker.com

DE – Germany, Kaarst
Tel: +49 (0)2131 4016 0
parker.germany@parker.com

DK – Denmark, Ballerup
Tel: +45 43 56 04 00
parker.denmark@parker.com

ES – Spain, Madrid
Tel: +34 902 330 001
parker.spain@parker.com

FI – Finland, Vantaa
Tel: +358 (0)20 753 2500
parker.finland@parker.com

FR – France, Contamine s/Arve
Tel: +33 (0)4 50 25 80 25
parker.france@parker.com

GR – Greece, Athens
Tel: +30 210 933 6450
parker.greece@parker.com

HU – Hungary, Budaörs
Tel: +36 23 885 470
parker.hungary@parker.com

IE – Ireland, Dublin
Tel: +353 (0)1 466 6370
parker.ireland@parker.com

IL – Israel
Tel: +39 02 45 19 21
parker.israel@parker.com

IT – Italy, Corsico (MI)
Tel: +39 02 45 19 21
parker.italy@parker.com

KZ – Kazakhstan, Almaty
Tel: +7 7273 561 000
parker.easteurope@parker.com

NL – The Netherlands, Oldenzaal
Tel: +31 (0)541 585 000
parker.nl@parker.com

NO – Norway, Asker
Tel: +47 66 75 34 00
parker.norway@parker.com

PL – Poland, Warsaw
Tel: +48 (0)22 573 24 00
parker.poland@parker.com

PT – Portugal
Tel: +351 22 999 7360
parker.portugal@parker.com

RO – Romania, Bucharest
Tel: +40 21 252 1382
parker.romania@parker.com

RU – Russia, Moscow
Tel: +7 495 645-2156
parker.russia@parker.com

SE – Sweden, Spånga
Tel: +46 (0)8 59 79 50 00
parker.sweden@parker.com

SL – Slovenia, Novo Mesto
Tel: +386 7 337 6650
parker.slovenia@parker.com

TR – Turkey, Istanbul
Tel: +90 216 4997081
parker.turkey@parker.com

UA – Ukraine, Kiev
Tel: +48 (0)22 573 24 00
parker.poland@parker.com

UK – United Kingdom, Warwick
Tel: +44 (0)1926 317 878
parker.uk@parker.com

ZA – South Africa, Kempton Park
Tel: +27 (0)11 961 0700
parker.southafrica@parker.com

North America

CA – Canada, Milton, Ontario
Tel: +1 905 693 3000

US – USA, Cleveland
Tel: +1 216 896 3000

Asia Pacific

AU – Australia, Castle Hill
Tel: +61 (0)2-9634 7777

CN – China, Shanghai
Tel: +86 21 2899 5000

HK – Hong Kong
Tel: +852 2428 8008

IN – India, Mumbai
Tel: +91 22 6513 7081-85

JP – Japan, Tokyo
Tel: +81 (0)3 6408 3901

KR – South Korea, Seoul
Tel: +82 2 559 0400

MY – Malaysia, Shah Alam
Tel: +60 3 7849 0800

NZ – New Zealand, Mt Wellington
Tel: +64 9 574 1744

SG – Singapore
Tel: +65 6887 6300

TH – Thailand, Bangkok
Tel: +662 186 7000

TW – Taiwan, Taipei
Tel: +886 2 2298 8987

South America

AR – Argentina, Buenos Aires
Tel: +54 3327 44 4129

BR – Brazil, Sao Jose dos Campos
Tel: +55 800 727 5374

CL – Chile, Santiago
Tel: +56 2 623 1216

MX – Mexico, Toluca
Tel: +52 72 2275 4200

European Product Information Centre
Free phone: 00 800 27 27 5374
(from AT, BE, CH, CZ, DE, DK, EE, ES, FI, FR, IE, IL, IS, IT, LU, MT, NL, NO, PL, PT, RU, SE, SK, UK, ZA)

© 2017 Parker Hannifin Corporation. All rights reserved.

Catalogue PDE2600SPUK - V8 - May 2017

Parker Hannifin Ltd.
Tachbrook Park Drive
Tachbrook Park,
Warwick, CV34 6TU
United Kingdom
Tel.: +44 (0) 1926 317 878
Fax: +44 (0) 1926 317 855
parker.uk@parker.com
www.parker.com

Your local authorized Parker distributor