(Revised 02-15-21)

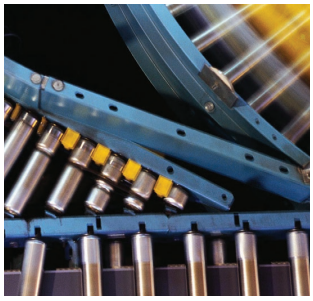





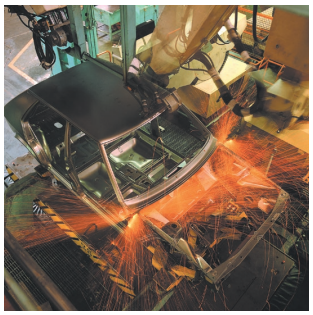



Air Preparation Products

Filters, Regulators, Lubricators, & Airline Accessories

Catalog 0700P-8 *(updated pdf)*



Parker

ENGINEERING YOUR SUCCESS.

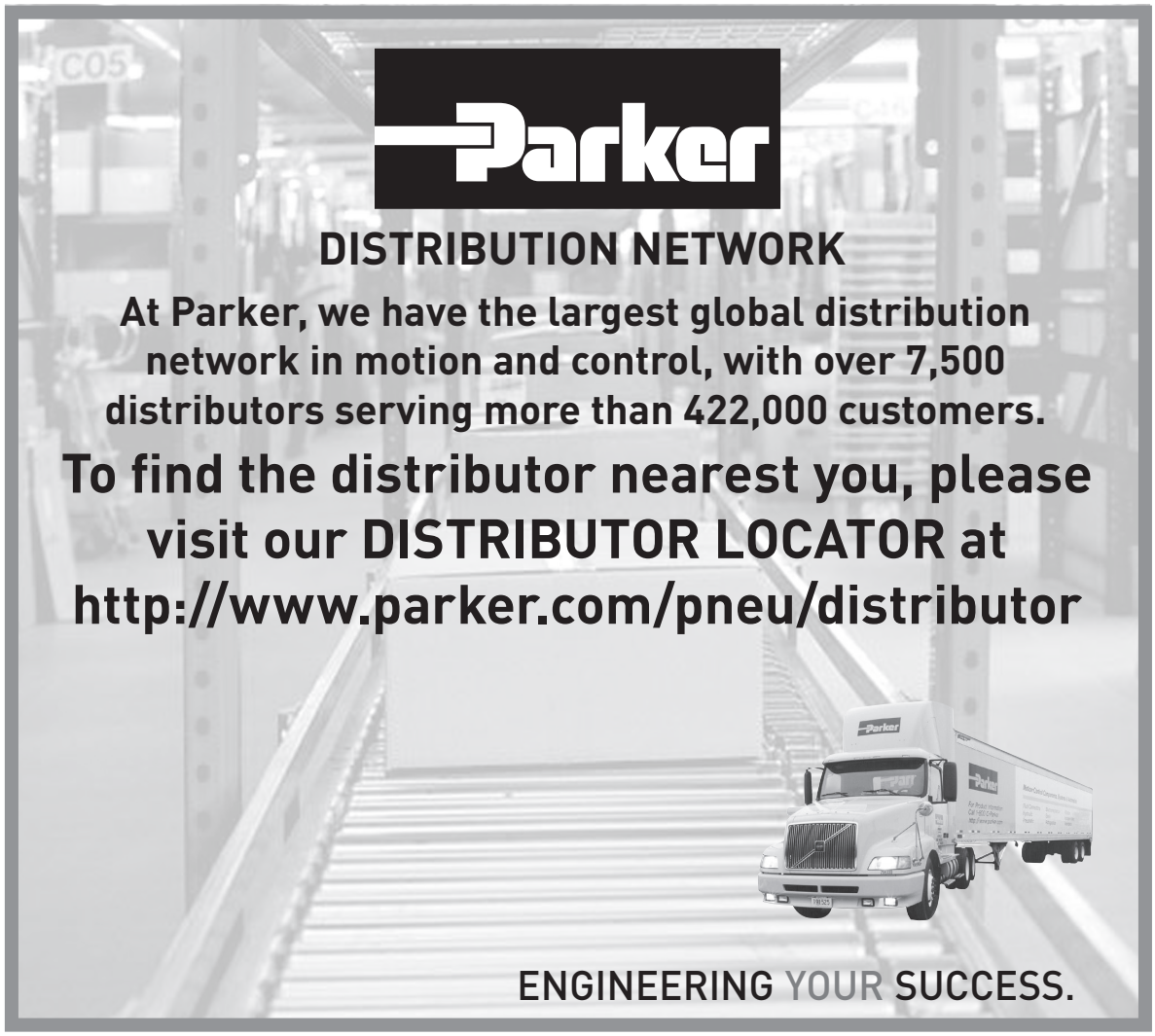

⚠ WARNING

FAILURE OR IMPROPER SELECTION OR IMPROPER USE OF THE PRODUCTS AND/OR SYSTEMS DESCRIBED HEREIN OR RELATED ITEMS CAN CAUSE DEATH, PERSONAL INJURY AND PROPERTY DAMAGE.

This document and other information from Parker Hannifin Corporation, its subsidiaries and authorized distributors provide product and/or system options for further investigation by users having technical expertise. It is important that you analyze all aspects of your application including consequences of any failure, and review the information concerning the product or system in the current product catalog. Due to the variety of operating conditions and applications for these products or systems, the user, through its own analysis and testing, is solely responsible for making the final selection of the products and systems and assuring that all performance, safety and warning requirements of the application are met.

The products described herein, including without limitation, product features, specifications, designs, availability and pricing, are subject to change by Parker Hannifin Corporation and its subsidiaries at any time without notice.

Offer of Sale

The items described in this document are hereby offered for sale by Parker Hannifin Corporation, its subsidiaries or its authorized distributors. This offer and its acceptance are governed by the provisions stated on the separate page of this document entitled “Offer of Sale”.

© Copyright 2016-2005 Parker Hannifin Corporation. All Rights Reserved

For inventory, lead times, and kit lookup, visit www.pdnplu.com

Parker Hannifin Corporation
Pneumatic Division
Richland, Michigan
www.parker.com/pneumatics

Product Index, Product Selection Guide, Engineering Data		A
Global Air Preparation	***P31, P32, P33 Series and Accessories***	B
P3Y Products	***P3Y Series and Accessories***	C
14 Series Products	***14 Series and Accessories***	D
Prep Air® II Products	***05, 06, 07 Series and Accessories***	E
Stainless Steel Products	***Stainless Steel and Accessories***	F
P3N Products	***P3N Series and Accessories***	G
General Industrial Products	***F602 Series, 35F / 43 Series, F701 Series, P3TF Coalescing Series, R119 Series, 09 Series, L606 Series***	H
Miniature / Inline Products	***P31 Series, 02 Series, 14 Series, 05 Series, P3A-R Series, R34 Series, R25 Series, R45 Series, 27 Series***	J
Regulator Products	***General Regulators, Dial Regulators, Pilot Regulators, Proportional Regulators, Semi & Precision Regulators, Water Regulators***	K
Bulk Liquid Separators	***P3TF Series***	L
Dryer Products	***Refrigeration Dryers, Desiccant Dryers***	M
Airline Accessories	***Drains, Lockout Valves, Mufflers, AirGuard Protection System***	N
Part Number Index, Safety Guide, Offer of Sale		O

Tel: +45 63 12 83 00 | Email: ps@hymatik.com | www.hymatik.com | Hvidkaervej 27a, DK-5250 Odense SV, Denmark

Air Preparation Units

Global FRL's

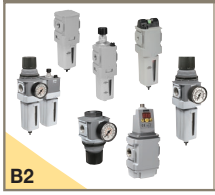

- Port size: 1/4 through 3/4 inch
- Maximum supply pressure: 300 psig
- Operating temperature: -13°F through 150°F
- Filters, regulators, filter / regulators, lubricators and accessories
- Modular construction

B2

P3N Series FRL's



- Port size: 3/4 through 1-1/2 inch
- Maximum supply pressure: 250 psig
- Operating temperature: 32°F through 175°F
- High flow
- Filters, regulators, filter / regulators, lubricators and accessories

G2

P3Y FRL's



- Port size: 3/4 through 1-1/2 inch
- Maximum supply pressure: 250 psig
- Operating temperature: -40°F through 140°F
- Filters, regulators, filter / regulators, lubricators and accessories
- Modular construction

C2

General Industrial FRL's



- Port size: 1/4 through 6 inch flange
- Maximum supply pressure: 300 psig
- Operating temperature: 32°F through 212°F
- Filters, regulators, filter / regulators, lubricators and accessories

H2

14 Series FRL's



- Port size: 1/8 through 1/4 inch
- Operating temperature: -4°F through 175°F
- Maximum supply pressure: 300 psig
- Non-modular construction
- Ideal for OEM applications
- Filters, regulators, filter / regulators, and lubricators

D2

Miniature / Inline FRL's



- Port size: 1/8 through 3/8 inch
- Operating temperature: -4°F through 175°F
- Non-modular construction
- Ideal for point of use applications
- Filters, regulators, filter / regulators, lubricators and accessories

J2

Prep-Air II FRL's



- Compact & standard
- Port size: 1/4 through 3/4 inch
- Maximum supply pressure: 300 psig
- Operating temperature: -4°F through 175°F
- Point of use applications
- Modular construction
- Filters, regulators, filter / regulators, lubricators and accessories

E2

Regulator Products



- Port sizes: 1/8 through 2 inch
- Maximum supply pressure: 300 psig
- Operating temperature: -40°F through 200°F
- Precision
- Electronic proportional
- General Regulators
- Water Regulators

K2

Stainless Steel FRL's



- Port sizes: 1/4 and 1/2 inch
- Stainless steel construction handles most corrosive environments
- Maximum supply pressure: 300 psig
- Operating temperature -40°F through 180°F
- Meets NACE specifications MR-01-75/ISO 15156
- Filters, regulators, filter / regulators, and lubricators

F2

Liquid Separators



- Port sizes 1/4 through 6 inch flange
- Designed in accordance with ASME
- Maximum supply pressure: 232 psig
- Operating temperature: 35°F through 175°F
- High liquid removal efficiencies at all flow conditions
- Low maintenance
- Suitable for variable flow compressors

L2

Tel: +45 63 12 83 00 | Email: ps@hymatik.com | www.hymatik.com | Hvidkaervej 27a, DK-5250 Odense SV, Denmark

Air Preparation Units

Dryer Products



- Refrigeration (10-2400 scfm)
- Inline desiccant (15-60 scfm)
- Heatless desiccant dryers (40-800 scfm)

M2

Accessories

Airline Accessories



- Zero loss & timer drains
- Drains cocks
- Lockout valves
- AirGuard
- Mufflers

N2

Part Number Index, Safety Guides, Offer of Sale

- Part Number to Page Number Index
- Safety Guide
- Offer of Sale

O2

Parker Hannifin Corporation
Pneumatic Division
Richland, Michigan
www.parker.com/pneumatics

Tel: +45 63 12 83 00 | Email: ps@hymatik.com | www.hymatik.com | Hvidkaervej 27a, DK-5250 Odense SV, Denmark

PNEUMATIC DIVISION E-TOOLS

Pneumatic Division Part Lookup Tool

Part Lookup Tool Overview

The purpose of this application is to provide users with more in depth detail, such as replacement kits or current inventory for specific pneumatic part numbers. The tool also provides cross reference information for products that have been previously obsoleted. Searches can be made by searching a portion or all of a part number. Use the drop down options available to narrow your search.

Part Lookup Tool Contents

- Replacement KITs by part number
- Obsolete cross reference
- Inventory/stock levels
- Pricing (with distributor login only)
- Bulk part search
- Shipping location
- Lead time

How to access the Tool

U.S. Parker Pneumatic Distributors

- **www.pdnpartlookup.com**
- **Or download the “Distributor Toolbox” app**

Guest Users

- **www.pdnplu.com**

Pneumatic Division Size & Selection Calculators

Size, Selection and Cost of Air Calculators Overview

The purpose of this application is to provide users and designers of pneumatic systems with a handy collection of compressed air cost calculators, conversion tools and air valve (Cv) and flow (SCFM) calculations for air cylinder actuation. The size and select calculators are available to anyone for use. See details below.

How to access the Tool

- **www.parkerpdncalc.com**
- **Or download the “Pneumatics” calculator app**

Calculator Contents

- Cost calculator for leaks
- Cost calculator for compressors
- Cost calculator for reverse flow regulators
- Vacuum flow through an orifice
- Air flow through an orifice
- Annual cost of air cylinder operation
- Valve/FRL sizing for cylinder actuation
- And more!

Tel: +45 63 12 83 00 | Email: ps@hymatik.com | www.hymatik.com | Hvidkaervej 27a, DK-5250 Odense SV, Denmark

The Parker 5-Year Extended Warranty

Parker Hannifin Corporation will extend its warranty on all pneumatic components to sixty (60) months providing they are correctly installed and protected by Parker pneumatic filters which are properly maintained. Components covered by this warranty include all cylinders, valves, and pneumatic automation components manufactured by Parker in any of our global facilities. This warranty covers our components anywhere in the world you may ship your equipment.

Parker's obligation under this warranty is limited to the replacement or repair of any failed components. The buyer understands that the seller will not be liable for any other costs or damages.

The buyers of quality Parker components and filters benefit by having ONE source for all pneumatic needs - **Parker.**



Jennifer Parmentier
President
Motion Systems Group

Parker

Tel: +45 63 12 83 00 | Email: ps@hymatik.com | www.hymatik.com | Hvidkaervej 27a, DK-5250 Odense SV, Denmark

Together we can power your application with clean, dry air

Fast cycle times, high product quality, and low downtime all require a clean, dry pneumatic system to function properly. Parker has what it takes to make sure pneumatic systems perform at their best.

Clean, dry pneumatic systems with Parker Global Air Preparation

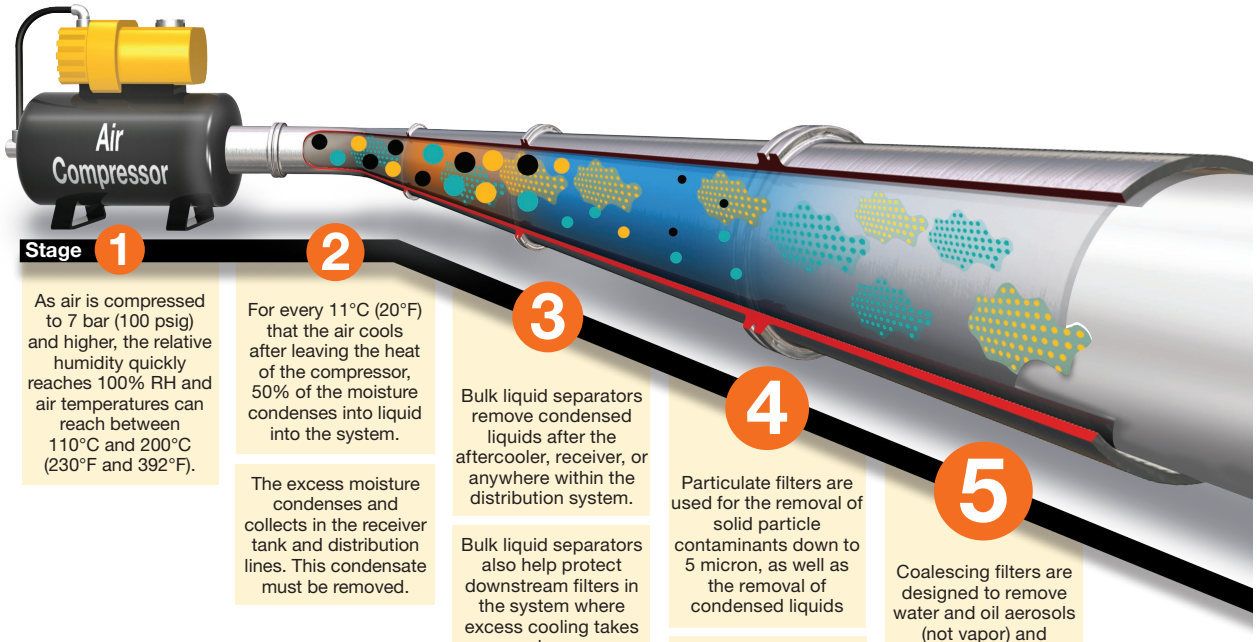

Stage 1

As air is compressed to 7 bar (100 psig) and higher, the relative humidity quickly reaches 100% RH and air temperatures can reach between 110°C and 200°C (230°F and 392°F).

Stage 2

For every 11°C (20°F) that the air cools after leaving the heat of the compressor, 50% of the moisture condenses into liquid into the system.

The excess moisture condenses and collects in the receiver tank and distribution lines. This condensate must be removed.

Stage 3

Bulk liquid separators remove condensed liquids after the aftercooler, receiver, or anywhere within the distribution system.

Bulk liquid separators also help protect downstream filters in the system where excess cooling takes place.

Stage 4

Particulate filters are used for the removal of solid particle contaminants down to 5 micron, as well as the removal of condensed liquids

Note: Water and oil, in vapor form, pass through general purpose particulate filters.

This type of filter should be used as a prefilter for the coalescing (oil removal) filter.

Stage 5

Coalescing filters are designed to remove water and oil aerosols (not vapor) and particulate from air streams down to 0.01 micron in size.

Installed in pairs, Particulate and Coalescing filters ensure a continuous supply of high quality air.

Key

- **Particulate**
- **Oil**
- **Water**
- **Oil Vapor**
- **Water Vapor**

Parker Hannifin Corporation
Pneumatic Division
Richland, Michigan
www.parker.com/pneumatics

Tel: +45 63 12 83 00 | Email: ps@hymatik.com | www.hymatik.com | Hvidkaervej 27a, DK-5250 Odense SV, Denmark

						
Stages	1 2	3	4	5	6	7
Function	**Air Compressor**	**Bulk Liquid Removal**	**Particulate Filtration**	**Coalescing Filtration**	**Air Dryers**	**Hydrocarbon Removal**
Application	All pneumatic systems	Basic pneumatic systems	Basic pneumatic systems	Systems requiring highest quality air.	Systems requiring air with reduced moisture content	Systems requiring highest quality air for critical applications
Description	Air leaving the compressor room at 93°C (200°F) releases 95% of its moisture into the piping system when it cools to 38°C (100°F)	Removes bulk liquid contamination and protects filters where excess cooling takes place in the distribution piping	Removes solid particulates down to 5 micron, and the separation of bulk contaminants.	Removes liquid aerosols and submicron particulates (not vapor) down to 0.01 micron.	Removes water vapor from air stream. Dew point reduced down to 4°C (40°F) (refrigeration) or -40°C (-40°F) (desiccant).	Removal of odors and trace vapors for critical applications.
Parker Global Air Preparation Solution	Customer supplied	P3TF Bulk Liquid Separator	P31, P32, P33 Particulate Filter	P31, P32, P33 Coalescing Filter	Refrigeration Dryer, TW Regenerative Desiccant Dryer	P31, P32, P33 Activated Carbon (Adsorber) Filter



Parker Hannifin Corporation
Pneumatic Division
Richland, Michigan
www.parker.com/pneumatics

Tel: +45 63 12 83 00 | Email: ps@hymatik.com | www.hymatik.com | Hvidkaervej 27a, DK-5250 Odense SV, Denmark

Pneumatic Air Preparation Products
Engineering Data

Engineering Data

Product Selection Guide	A2-A7
Engineering Selection Guide	A8
Fluid Power Graphic Symbols	A9
Product Information	A10
Particulate Filters Information	A11
Coalescing Filter Information	A12-A14
Regulator Information	A15
Filter / Regulator Information	A16
Lubricators Information	A17-A18
Dial Regulators	A19
Precision Regulators	A20-A22
Lockout Valves	A23
Dryers	A24-A26

Parker Hannifin Corporation
Pneumatic Division
Richland, Michigan
www.parker.com/pneumatics

Tel: +45 63 12 83 00 | Email: ps@hymatik.com | www.hymatik.com | Hvidkaervej 27a, DK-5250 Odense SV, Denmark

Product Selection Chart

Basic Unit	Series	Port Size (inch)													Bowls			Bowl Capacity	Element Type			Page
		1/8	1/4	3/8	1/2	3/4	1	1-1/4	1-1/2	2	2-1/2	3	4 flange	6 flange	Poly	Metal	Metal SG		5	40	Adsorber	
WATER SEPERATORS	P3TF		●	●	●	●	●		●	●					Aluminum Body			—	Bulk Liquid Separator			L2
WATER SEPERATORS	P3TF												●	●	Steel Housing			—	Bulk Liquid Separator			L5
FILTERS	02F		●												Aluminum Body			—	Std.	—	—	J2
FILTERS	P31F		●												●	●	—	.4 oz.	Std.	—	—	B8
FILTERS	PF504		●												Stainless Steel			1.0 oz	Opt.	Std.	—	F2
FILTERS	14F	●	●												●	●	—	1 oz.	Std.	Opt.	Opt.	D2
FILTERS	05F		●	●											●	—	—	2 oz.	—	Std.	—	E2
FILTERS	P32F		●	●	●										●	●	●	1.7 oz.	Std.	—	—	B10
FILTERS	06F		●	●	●										●	●	●	4.4 oz.	Opt.	Std.	—	E4
FILTERS	07F				●	●									●	●	●	7.2 oz.	Opt.	Std.	—	E6
FILTERS	P33F				●	●									●	●	●	2.8 oz.	Std.	—	—	B12
FILTERS	PF10				●										Stainless Steel			4.0 oz.	Opt.	—	—	F4
FILTERS	P3Y					●	●								●	—	—	4.4 oz.	Std.	—	—	C4
FILTERS	P3NF					●	●		●						—	—	●	18 oz.	—	Std.	—	G2
FILTERS	F602					●	●		●	●					—	●	●	16 oz. (W) 32 oz. (E)	Opt.	Std.	—	H2
FILTERS	35F								●	●					—	●	—	13.9 oz.	Std.	—	—	H8
FILTERS	43F											●			—	●	—	17.2 oz.	Std.	—	—	H8

For inventory, lead times, and kit lookup, visit www.pdnplu.com

Parker Hannifin Corporation
Pneumatic Division
Richland, Michigan
www.parker.com/pneumatics

Product Selection Chart

Basic Unit	Series	Port Size (inch)													Bowls			Bowl Capacity	Element Type			Page
		1/8	1/4	3/8	1/2	3/4	1	1-1/4	1-1/2	2	2-1/2	3	4 flange	6 flange	Poly	Metal	Metal SG		0.01	1.0	Adsorber	
COALESCING FILTERS	02F		●												Nylon Housing			—	Std.	Opt.		J8
	P31F		●												●	●	—	.4 oz.	Std.	Opt.	Opt.	B14
	PF501		●												Stainless Steel			1.0 oz.	Std.	—	—	F6
	10F	●	●												●	●	—	1 oz.	Std.	Opt.	—	D4
	15F		●	●											●	—	—	2 oz.	Std.	—	—	E8
	P32F		●	●	●										●	●	●	1.7 oz.	Std.	Opt.	—	B16
	11F		●	●	●										●	●	●	4.4 oz.	Std.	Opt.	—	E10
	12F				●	●									●	●	●	7.2 oz.	Std.	Opt.	—	E12
	P33F				●	●									●	●	●	2.8 oz.	Std.	—	Opt.	B18
	PF11				●										Stainless Steel			4.0 oz.	Std.	—	—	F8
	P3Y					●	●								●			4.4 oz.	Std.	—	—	C6
	P3NF					●	●		●						—	—	●	18 oz.	Std.	—	—	G4
	F701					●	●								—	●	●	32 oz. (E) 100 oz. (L)	Std.	Opt.	—	H12
	35F								●	●					—	●	—	13.9 oz.	Std.	Opt.	—	H10
	43F											●			—	●	—	17.2 oz.	Std.	Opt.	—	H10
	P3TF												●	●	—	●	—	—	Std.	Opt.	—	H14

For inventory, lead times, and kit lookup, visit www.pdnplu.com

Parker Hannifin Corporation
Pneumatic Division
Richland, Michigan
www.parker.com/pneumatics

Tel: +45 63 12 83 00 | Email: ps@hymatik.com | www.hymatik.com | Hvidkaervej 27a, DK-5250 Odense SV, Denmark

Product Selection Chart

Basic Unit		Series	Port Size										Spring Range																Page
			1/8	1/4	3/8	1/2	3/4	1	1-1/4	1-1/2	2	2-1/2	8	15	20	25	30	40	50	60	100	120	125	140	150	160	175	200	232	250	
REGULATORS	STANDARD	P31R		●									—	—	—	—	Opt.	—	—	Opt.	—	—	Std.	—	—	—	—	—	Opt.	—	B20-B23
		14R	●	●									—	Opt.	—	—	Opt.	—	—	Opt.	—	—	Std.	—	—	—	—	—	—	—	D6
		P3A-R	●	●									—	Opt.	—	—	Opt.	—	—	Opt.	—	Std.	—	—	—	—	—	—	—	—	J20
		R34	●	●									—	—	—	—	Opt.	—	—	Opt.	—	—	Std.	—	—	—	—	—	—	—	J22
		R25	●	●									—	—	—	Opt.	—	—	—	Opt.	—	—	Std.	—	—	—	—	—	—	—	J24, K8
		R45		●	●								—	—	—	Opt.	—	—	—	Opt.	—	—	Std.	—	—	—	—	—	—	—	J26, K10
		15R		●	●								—	Opt.	—	—	Opt.	—	—	Opt.	—	—	Std.	—	—	—	—	—	—	—	J28
		05R		●	●								—	—	—	—	Opt.	—	—	Std.	—	—	Std.	—	—	—	—	Opt.	—	—	E14
		P32R		●	●	●							—	—	—	—	Opt.	—	—	Opt.	—	—	Std.	—	—	—	—	—	—	Opt.	B24-B27
		06R		●	●	●							—	—	—	—	—	—	—	Std.	—	—	Std.	—	—	—	—	—	—	Opt.	E16
		P33R				●	●						—	—	—	—	Opt.	—	—	Opt.	—	—	Std.	—	—	—	—	—	—	Opt.	B30
		P3Y					●	●					—	—	—	—	—	—	—	—	—	—	—	—	—	—	Std.	—	Opt.		C8
		07R				●	●						—	—	—	—	—	—	—	Std.	—	—	Std.	—	—	—	—	—	—	Opt.	E18
		P3NR					●	●		●			—	—	—	—	—	—	—	—	—	—	Std.	—	—	—	—	—	—	Opt.	G6
		R119		●	●	●	●	●		●			—	—	—	Opt.	—	—	—	Opt.	—	—	Std.	—	—	—	—	—	—	Opt.	H16-H19
		09R									●		—	—	—	—	—	—	—	—	—	—	Std.	—	—	—	—	—	—	—	H26
	PILOT	11R		●	●	●							*	*	*	*	*	*	*	*	*	*	*	*	*	*	*	*	*	*	E20
		12R				●	●						*	*	*	*	*	*	*	*	*	*	*	*	*	*	*	*	*	*	E22
		P3Y					●	●					*	*	*	*	*	*	*	*	*	*	*	*	*	*	*	*	*	*	C10
		P3NR					●	●		●			*	*	*	*	*	*	*	*	*	*	*	*	*	*	*	*	*	*	G8
		R119		●	●	●	●	●		●	●	●	*	*	*	*	*	*	*	*	*	*	*	*	*	*	*	*	*	*	H20-H25
	STAINLESS	PR354		●									—	—	—	Opt.	—	—	—	Opt.	—	—	Std.	—	—	—	—	—	—	—	F10
		PR364		●									—	—	—	Opt.	—	—	—	Opt.	—	—	Std.	—	—	—	—	—	—	—	F10
		PR10				●							—	—	—	—	—	—	—	Opt.	—	—	Std.	—	—	—	—	—	—	Opt.	F12
		PR11				●							—	—	—	—	—	—	—	Opt.	—	—	Std.	—	—	—	—	—	—	Opt.	F12

* Will follow Pilot Regulator setting.

For inventory, lead times, and kit lookup, visit www.pdnplu.com

Parker Hannifin Corporation
Pneumatic Division
Richland, Michigan
www.parker.com/pneumatics

Product Selection Chart

Basic Unit		Series	Port Size										Spring Range																	Page
			1/8	1/4	3/8	1/2	3/4	1	1-1/4	1-1/2	2	2-1/2	8	15	20	25	30	40	50	60	100	120	125	140	150	160	175	200	232	250	
REGULATORS	PROPORTIONAL	P31P		●									—	—	—	—	Opt.	—	—	—	—	—	—	—	Std.	—	—	—	—	—	B32
		EPP4		●		●							—	—	—	—	—	—	—	—	—	—	—	—	—	—	—	—	—	K82
		P32P				●							—	—	—	—	Opt.	—	—	—	—	—	—	—	Std.	—	—	—	—	—	B32
		PAR-15				●							—	—	—	—	—	—	—	—	—	—	—	—	—	—	Std.	—	Opt.	—	K74
		P3Y					●	●					—	—	—	—	—	—	—	—	—	—	—	—	—	—	—	—	—	—	C12
	DIAL	51R		●									—	—	—	—	—	—	—	—	—	—	—	Opt.	—	Std.	—	—	—	—	K42
		52R		●	●	●	●						—	—	—	—	—	Opt.	—	—	—	—	—	—	—	Std.	—	—	—	—	K44
		53R					●	●	●				—	—	—	—	—	Opt.	—	—	—	—	—	—	—	Std.	—	—	—	—	K46
		54R								●	●		—	—	—	—	—	Opt.	—	—	—	—	—	—	—	Std.	—	—	—	—	K48
	SEMI	27R		●									—	Opt.	—	—	Opt.	—	—	Opt.	—	—	Std.	—	—	—	—	—	—	—	K14
		R216		●	●								Opt.	—	Std.	—	—	—	Opt.	—	—	—	—	—	—	—	—	—	—	—	K38
	PRECISION	P3RA302		●									—	—	—	—	Opt.	—	—	—	Std.	—	—	—	—	—	—	—	—	—	K90
		P3RA102		●									—	—	—	—	Opt.	—	—	Opt.	—	—	—	—	Std.	—	—	—	—	—	K92
		P3RA102BP		●									—	—	—	—	Opt.	—	—	Opt.	—	—	—	—	Std.	—	—	—	—	—	K94
		P3RA171		●									—	—	—	—	Std.	—	—	—	—	—	—	—	—	—	—	—	—	—	K96
		P3EA632		●									—	—	—	—	—	—	—	Opt.	—	—	—	—	—	—	—	—	—	—	K98
		P3BA208		●									—	—	—	—	—	—	—	—	—	—	—	—	—	—	—	—	—	—	K100
		P3BA45		●									—	—	—	—	—	—	—	—	—	—	—	—	—	—	—	—	—	—	K102
	WATER	20R	●	●									—	—	Opt.	—	—	—	—	Opt.	—	—	Std.	—	—	—	—	—	—	—	K104
		R24	●										—	—	Opt.	—	—	—	—	Opt.	—	—	Std.	—	—	—	—	—	—	—	K106
		R46	●		●								—	—	Opt.	—	—	—	—	Opt.	—	—	Std.	—	—	—	—	—	—	—	K108

Tel: +45 63 12 83 00 | Email: ps@hymatik.com | www.hymatik.com | Hvidkaervej 27a, DK-5250 Odense SV, Denmark

Product Selection Chart

Basic Unit		Series	Port Size									Bowls			Bowl Capacity	Elements (Micron)			Adsorber	Spring Range									Page
			1/8	1/4	3/8	1/2	3/4	1	1-1/4	1-1/2	2	Poly	Metal	Metal SG		5	20	40		15	25	30	60	110	125	175	200	250	
FILTER/REGULATORS		P31E		●								●	●	—	0.4 oz.	Std.	—	—	—	—	—	Opt.	Opt.		—	—	—	Opt.	B42
		14E	●	●								●	●	—	1 oz.	Std.	—	Opt.	Opt.	Opt.	—	Opt.	Opt.		Std.	—	—	—	D8
		B34	●	●								●	●	—	1 oz.	Std.	Opt.	—	—	—	Opt.	—	Opt.		Std.	—	—	—	J32
		05E		●	●							●	—	—	2 oz.	—	—	Std.	—	—	—	Opt.	Std.		Std.	—	Opt.	—	E24
		P32E		●	●	●						●	●	●	1.7 oz.	Std.	—	—	—	—	—	Opt.	Opt.		Std.	—	—	Opt.	B44-B47
		06E		●	●	●						●	●	●	4.4 oz.	Opt.	—	Std.	—	—	—	—	Std.		Std.	—	—	Opt.	E26
		07E				●	●					●	●	●	7.2 oz.	Opt.	—	Std.	Opt.	—	—	—	Std.		Std.	—	—	Opt.	E28
		P33E				●	●					●	●	●	2.8 oz.	Std.	—	—	—	—	—	Opt.	Opt.		Std.	—	—	Opt.	B48
		P3Y					●	●				●	●	●	4.4 oz.	Std.	—	—	—	—	—	—	—		—	Std.	—	Opt.	C14
		P3NE					●	●		●		—	—	●	18 oz.	—	—	Std.	—	—	—	—	—		Std.	—	—	Std.	G10
		12E				●	●					—	●	—	7.2 oz.	6 Std. 0.01	—	10 Opt. 1.0	—	—	—	—	Opt.		Std.	—	—	Opt.	E30
LUBRICATORS	MICROMIST	15L		●	●							●	—	●	2 oz.	Cannot be filled under pressure												E32
		16L		●	●	●						●	●	●	2.6 oz.	Cannot be filled under pressure												E34
		17L			●	●	●					●	●	●	4.9 oz.	Cannot be filled under pressure												E36
	MIST	02L		●	●							Aluminum Body			0.25 oz.	Cannot be filled under pressure												J38
		P31L		●								●	—	●	0.6 oz.	Can be filled under pressure												B50
		04L	●	●								●	●	—	1 oz.	Cannot be filled under pressure												D10
		P32L		●	●	●						●	—	●	4.09 oz.	Can be filled under pressure												B52
		06L		●	●	●						●	●	●	2.9 oz.	Can be filled under pressure												E38
		07L				●	●					●	●	●	6 oz.	Can be filled under pressure												E40
		P33L				●	●					●	—	●	6.1 oz.	Can be filled under pressure												B54
		PL10				●						Stainless Steel			4.0 oz.	Cannot be filled under pressure												F18
		P3Y					●	●				●	—	—	16.9 oz.	Can be filled under pressure												C16
		P3NL					●	●		●		—	—	●	18 oz.	Can be filled under pressure												G12
		L606					●	●		●		—	●	●	16 oz. (W) 32 oz. (E) 64 oz. (G)	Can be filled under pressure												H28-H31
		09L									●	—	—	●	1 qt. Std. 3 qt. Opt.	Can be filled under pressure												H32

Tel: +45 63 12 83 00 | Email: ps@hymatik.com | www.hymatik.com | Hvidkaervej 27a, DK-5250 Odense SV, Denmark

Product Selection Chart

Basic Unit		Series	Number of Components	Port Size									Bowls			Elements (Micron)					Spring Range							Page
				1/8	1/4	3/8	1/2	3/4	1	1-1/4	1-1/2	2	Poly	Metal	Metal SG	5	40	0.01	1.0	Adsorber	15	30	60	125	175	232	250	
COMBOS	MODULAR	P31	Multi		●								●	●	—	Std.	—	Opt.	Opt.	Opt.	—	Opt.	Opt.	Std.	—	—	Opt.	B56
		P32	Multi		●	●	●						●	●	●	Std.	—	Opt.	Opt.	Opt.	—	Opt.	Opt.	Std.	—	—	Opt.	B57
		06H/16H	2		●	●	●						●	●	●	Opt.	Std.	—	—	—	—	—	Opt.	Std.	—	—	Opt.	E44
		06B/16B	3		●	●	●						●	●	●	Opt.	Std.	—	—	—	—	—	Opt.	Std.	—	—	Opt.	E44
		07H/17H	2				●	●					●	●	●	Opt.	Std.	—	—	—	—	—	Opt.	Std.	—	—	Opt.	E44
		07B/17B	3				●	●					●	●	●	Opt.	Std.	—	—	—	—	—	Opt.	Std.	—	—	Opt.	E44
		P33	Multi				●	●					●	●	●	Std.	—	Opt.	Opt.	Opt.	—	Opt.	Opt.	Std.	—	—	Opt.	B58
		P3YCA	2					●	●				●	●	●	Std.	—	—	—	—	—	—	—	—	Std.	Opt.	—	C18
		P3YCB	3					●	●				●	●	●	Std.	—	—	—	—	—	—	—	—	Std.	Opt.	—	C18
		P3NCA	2					●	●		●		—	—	●	—	Std.	—	—	—	—	—	—	Std.	—	—	Opt.	G14
		P3NCB	3					●	●		●		—	—	●	—	Std.	—	—	—	—	—	—	Std.	—	—	Opt.	G14
	NIPPLED	14G	2	●	●								●	●	—	Std.	Opt.	—	—	—	Opt.	Opt.	Opt.	Std.	—	—	—	D12
		14A	3	●	●								●	●	—	Std.	Opt.	—	—	—	Opt.	Opt.	Opt.	Std.	—	—	—	D12
		06G/16G	2		●	●	●						●	●	●	Opt.	Std.	—	—	—	—	—	Std.	Std.	—	—	Opt.	E42
		06A/16A	3		●	●	●						●	●	●	Opt.	Std.	—	—	—	—	—	Std.	Std.	—	—	Opt.	E42
		07G/17G	2				●	●					●	●	●	Opt.	Std.	—	—	—	—	—	Std.	Std.	—	—	Opt.	E42
		07A/17A	3				●	●					●	●	●	Opt.	Std.	—	—	—	—	—	Std.	Std.	—	—	Opt.	E42
		C628	3					●	●		●		—	●	●	Opt.	Std.	—	—	—	—	—	—	Std.	—	—	Opt.	H34

Basic Units	Series	Port Sizes	Flow Rates (scfm)	Pressure dewpoints			Electrical Requirement		Dryer Application	Page
				37-50°F	-40°F	-40 to -100°F	Yes	No		
Disposable Inline Desiccant	DD10-02	1/4"	15	—	Std.	—	—	●	Point of use, intermittent use	M6
Inline Desiccant	DD	1/4" to 1"	15, 30, 60	—	Std.	—	—	●	Point of use, intermittent use	M7
Regenerative Desiccant Dryer	DAS	3/8"	3 - 20	—	Std.	—	●	—	Compact, lightweight, point of use	M9
Heatless Desiccant Dryer	PTW	1/2" to 2"	25 - 800	—	Std.	Opt.	●	—	Specific where very low pressure dewpoints are required	M13
Refrigeration Dryer	PRD	1/2" to 6" flange	10 - 2,400	Std.	—	—	●	—	General industrial use	M2

Saving Money and Space by Sizing Your Valves Properly

This catalog gives you a flow rating (Cv) for each valve in the Parker Hannifin line. You can "plug" *your* requirements into the following simple formula, and determine the Cv needed to do the job. By not oversizing, you'll save space and money, and you'll ensure the valve you select will do the job.

Converting the Job Requirements Into Cv (Capacity Co-efficient).

$$C_V = \frac{\text{Cylinder Area (Sq. In.) (See Table 1)} \times \text{Cylinder Stroke (In.)} \times \text{Compression Factor (Table 2)} \times \text{"A" (Table 2)}}{\text{Stroke Time (sec.)} \times 28.8}$$

Let's work through an example:

We want to extend a 3 1/4" bore cylinder which has a 12" stroke in one second, and we have a supply pressure of 80 PSI to do the work. Here's what we know:

Cylinder Area for a 3-1/4" Bore, from Table 1 .....8.30 sq. in.

Cylinder Stroke..... 12 in.

Stroke Time Required in Seconds.....1 sec.

Compression Factor at 80 PSI, from Table 2..... 6.4

"A" Constant for 80 PSI, from Table 2 ..... .048

Substituting in the formula, we have:

$$C_V = \frac{8.30 \times 12 \times 6.4 \times .048}{1 \times 28.8} = 1.06$$

Any valve, therefore, which has a Cv of *at least* 1.06, will extend our cylinder the specified distance in the required time.

Choosing the Valve "Series"

Your next step is to choose a basic valve design to do the job. For a quick guide to valve designs, see Table 3.

Having selected the basic valve design, consult the Capacity Co-efficient (Cv) tables which describe the individual valve capacities.

Selecting the Valve Model, Options and Accessories

Having determined Cv, series, port size, flow-path configuration (pre-determined by circuit design), and actuation method, you're ready to choose the *exact* valve model number.

Read the pertinent catalog pages; note the exact model numbers, options and accessories you want. Then phone or write your Parker Hannifin air valve distributor. They will give you prompt, accurate service.

Note: Need circuit design help? Contact your local Parker Hannifin distributor. They are backed up by our regional Sales Engineers and offices. Between them, you'll find answers to all of your questions.

Table 1

Effective Square-Inch Areas for Standard-Bore-Size Cylinders

Bore Size	Cylinder Area (Sq. In.)	Bore Size	Cylinder Area (Sq. In.)
3/4"	.44	4"	12.57
1"	.79	4-1/2"	15.90
1-1/8"	.99	5"	19.64
1-1/4"	1.23	6"	28.27
1-1/2"	1.77	7"	38.48
1-3/4"	2.41	8"	50.27
2"	3.14	10"	78.54
2-1/2"	4.91	12"	113.10
3-1/4"	8.30	14"	153.94
3-5/8"	10.32		

Table 2

Compression Factors and "A" Constants

Inlet Pressure (psig)	Compression Factor	"A" Constants for Various Pressure Drop*		
		2 PSI △P	5 PSI △P	10 PSI △P
10	1.6	.152	.103	
20	2.3	.126	.084	.065
30	3.0	.111	.073	.055
40	3.7	.100	.065	.048
50	4.4	.091	.059	.044
60	5.1	.085	.055	.040
70	5.7	.079	.051	.037
80	6.4	.075	.048	.035
90	7.1	.071	.046	.033
100	7.8	.068	.044	.032
110	8.5	.065	.042	.030
120	9.2	.063	.040	.029
130	9.9	.061	.039	.028
140	10.6	.058	.037	.027
150	11.2	.057	.036	.026
160	11.9	.055	.035	.025
170	12.6	.053	.034	.024
180	13.3	.052	.033	.024
190	14.0	.051	.032	.023
200	14.7	.050	.032	.023

Note: Use "A" constant at 5 PSI △P for most applications. On very critical applications, use "A" at 2 PSI △P. You will find in many cases, a 10 PSI △P is not detrimental, and can save money and mounting space.

* Tabulated values are the solution of $\frac{1}{22.48}\sqrt{\frac{GT}{(P_1 - P_2)\,P_2}}$ where T is for 68°F and G =1 for Air.

Table 3

Characteristics of the Major Valve Designs

A. Poppet 3-Way and 4-Way	1. High flow capacities 2. Minimum lubrication requirements 3. Fast response 4. Self-cleaning poppet seats 5. Pressures of 15 to 150 psig (modifications for vacuum to 250 psig)
B. Spool Valves (WCS) 3-Way and 4-Way	1. Low friction 2. Lower operating pressures 3. Fast response 4. Less wear 5. Long Cycle Life - Under pressure, radial expansion of the seal occurs to maintain sealing contact with the valve bore 6. Non-Lube Service - No lubrication required for continuous valve shifting 7. Bi-Directional Spool Seals - Common spool used for any pressure, including vacuum
C. Packed Bore 4-Way	1. Wide range of flow capacities 2. Wide range of flow-path configurations 3. Pilot-operated models available 4. Pressures of vacuum to 150 psig
D. Rotary or Reciprocating Disc 4-Way, manually operated	1. Inexpensive 2. Versatility in manual actuation

Cv – Capacity Co-efficients (sometimes called Flow Factors). Each flow path through the valve has its own Cv value. All Cv ratings for each valve cataloged on this page are listed on the front side of this sheet.

$$C_V = \frac{Q}{22.48}\sqrt{\frac{GT}{(P_1 - P_2)\,P_2}}$$

$C_V = Q \times$ "A" (Table 2)

Q = Flow in Standard Cubic Feet per minute (14.7 PSIA at 60°F)
P_1 = Inlet Absolute Pressure (gauge pressure + 14.7)
P_2 = Outlet Absolute Pressure (gauge pressure + 14.7)
Note: P_2 must be greater than .53 x P_1
G = Specific Gravity of flowing medium (Air, G =1)
T = Absolute Temperature of Air (460 + °F.)

For inventory, lead times, and kit lookup, visit www.pdnplu.com

Parker Hannifin Corporation
Pneumatic Division
Richland, Michigan
www.parker.com/pneumatics

Tel: +45 63 12 83 00 | Email: ps@hymatik.com | www.hymatik.com | Hvidkaervej 27a, DK-5250 Odense SV, Denmark

Air Preparation Units

Symbol	Description
	**Filter / Separator** with manual drain
	**Filter / Separator** with automatic drain
	**Oil Removal Filter**
	**Automatic Drain**
	**Lubricator** less drain
	**Lubricator** with manual drain
	**Lubricator** with automatic filling
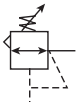	**Air Line Pressure Regulator** adjustable, relieving
	**Air Line Pressure Regulator** pilot controlled, relieving
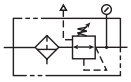	**Filter / Regulator** (piggyback) manual drain relieving (with gauge)
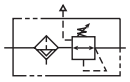	**Filter / Regulator** (piggyback) auto drain relieving
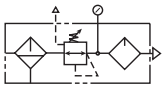	**Air Line Combo F-R-L** simplified

Pneumatic Valves

Symbol	Description
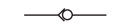	**Check**
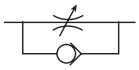	**Flow Control**
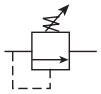	**Relief Valve**
	**2-Position, 2-Way**
	**2-Position, 3-Way**
	**2-Position, 4-Way**
	**2-Position, 4-Way 5-Ported**

Pneumatic Valves

Symbol	Description
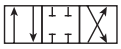	**3-Position, 4-Way, APB** ports closed, center pos.
	**3-Position, 4-Way, CE 5-Ported** cylinder ports open to exhaust in center position
	**3-Position, 4-Way, PC 5-Ported** pressure port open to cylinder ports in center position
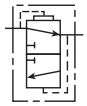	**Quick Exhaust**
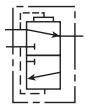	**Shuttle**

Valve Actuators

Symbol	Description
	**Manual** general symbol
	**Push Button**
	**Lever**
	**Pedal or Treadle**
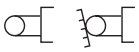	**Mechanical** cam, toggle, etc.
	**Spring**
	**Detent** line indicates which detent is in use
	**Piezo**
	**Solenoid**
	**Internal Pilot Supply**
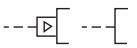 complete simplified	**Remote Pilot Supply**
	**And / Or Composite** solenoid and pilot or manual override
	**And / Or Composite** solenoid and pilot or manual override and pilot

Cylinders

Symbol	Description
	**Standard** double acting
	**Single Acting**
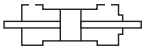	**Double Rod**
	Spring Return
	Ram Type
	Telescope
	Tandum
	Duplex

Lines and Functions

Symbol	Description
	Solid Line – Main Line
	Dashed Line – Pilot Line
	Dotted Line – Exhaust or Drain Line
	Center Line – Enclosure Outline
	Lines Crossing (90° intersection not necessary)
	Lines Joining (90° intersection not necessary)
	Lines Joining
	Flow Direction hydraulic medium
	Flow Direction gaseous medium
	Energy Source
	Line with Fixed Restriction
	Line with Adjustable Restriction
	Flexible Line
	Plugged Port, Test Station, Power Take-off
connected disconnected	**Quick Disconnect Without Checks**
connected disconnected	**Quick Disconnect With Checks**
connected disconnected	**Quick Disconnect With One Check**

For inventory, lead times, and kit lookup, visit www.pdnplu.com

Parker Hannifin Corporation
Pneumatic Division
Richland, Michigan
www.parker.com/pneumatics

Tel: +45 63 12 83 00 | Email: ps@hymatik.com | www.hymatik.com | Hvidkaervej 27a, DK-5250 Odense SV, Denmark

⚠ CAUTION:

Polycarbonate bowls and sight domes, being transparent and tough, are ideal for use with Filters and Lubricators. They are suitable for use in normal industrial environments, but should not be located in areas where they could be subjected to direct sunlight, an impact blow, nor temperatures outside of the rated range. As with most plastics, some chemicals can cause damage. Polycarbonate bowls and sight domes should not be exposed to chlorinated hydro-carbons, ketones, esters and certain alcohols. They should not be used in air systems where compressors are lubricated with fire-resistant fluids such as phosphate ester and di-ester types.

Metal bowls are recommended where ambient and/or media conditions are not compatible with polycarbonate bowls. Metal bowls resist the action of most such solvents, but should not be used where strong acids or bases are present or in salt laden atmospheres. Consult the factory for specific recommendations where these conditions exist.

TO CLEAN POLYCARBONATE COMPONENTS USE MILD SOAP AND WATER ONLY! DO NOT use cleansing agents such as acetone, benzene, carbon tetrachloride, gasoline, toluene, etc., which are damaging to this plastic.

Metal bowl guards are recommended for all applications.

⚠ CAUTION:

REGULATOR PRESSURE ADJUSTMENT – The working range of knob adjustment is designed to permit outlet pressures within their full range. Pressure adjustment beyond this range is also possible because the knob is not a limiting device. This is a common characteristic of most industrial regulators, and limiting devices may be obtained only by special design.

For inventory, lead times, and kit lookup, visit www.pdnplu.com

Parker Hannifin Corporation
Pneumatic Division
Richland, Michigan
www.parker.com/pneumatics

Tel: +45 63 12 83 00 | Email: ps@hymatik.com | www.hymatik.com | Hvidkaervej 27a, DK-5250 Odense SV, Denmark

Filters

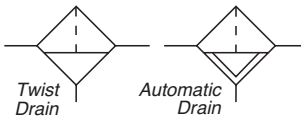

Air filters are designed to remove airborne solid contaminants, pipescale, rust, pipe dope, etc., which may plug small orifices or cause excessive wear and premature failure of pneumatic components.

Filter Selection

1. Determine maximum system flow requirements.
2. Determine maximum allowable pressure drop at rated flow in scfm.
3. Refer to flow chart and select filter pipe size by choosing curve that offers minimum pressure drop at desired flow in scfm. For optimum performance, a 2 to 5 psig pressure drop should be selected.

Particulate Filters:

For the removal of solid particle contaminants down to 5 microns and the separation of bulk liquids.

This type of filter is generally used in industrial applications where liquid water and oil, and harmful dirt particles must be removed from the compressed air system. This type of filter should also be used as a prefilter for the Coalescing (oil removal) filter.

First Stage Filtration:

Air enters at inlet port and flows through deflector plate **(A)** which causes a swirling action. Liquids and coarse particles are forced to the bowl interior wall **(B)** by the centrifugal action of the swirling air. They then carry down the bowl wall by the force of gravity. Shroud **(C)** assures that the proper swirling action occurs and that the air does not pass directly through the filter element **(D)** until the large particles and liquids are removed. The baffle **(E)** separates the lower portion of the bowl into a "quiet zone" where the removed liquids and particles collect, unaffected by the swirling air, and are therefore not reentrained into the flowing air.

Second Stage Filtration:

After liquids and large particles are removed in the first stage of filtration, the air flows through element **(D)** where smaller particles are filtered out and retained. The filtered air then passes downstream. Collected liquids and particles in the "quiet zone" should be drained before their level reaches a height where they would be reentrained in the flowing air. This can be accomplished by the twist drain **(F)** which is actuated by twisting knob **(G)** counterclockwise. On the 09 Series, unscrew the drain valve **(F)** slightly until the liquid begins to drain.

Once the required flow is determined for a pneumatic application, the filter can be selected by using the flow chart. To read the filter flow chart, first determine the inlet pressure that will be used. Find the appropriate pressure curve on the graph. Each graph will contain three pressure curves. If the required inlet pressure is not on the graph, interpolate a similar curve for the required pressure. Next, determine the acceptable pressure drop across the filter and locate it on the vertical axis. Find the intersection point of the acceptable pressure drop and the inlet pressure curve. At this point follow a vertical path downward to view the flow in scfm. If the flow is too low, select a larger port size or body size to give the required flow. If the flow is higher than necessary, select a smaller port size or body size to give the required flow.

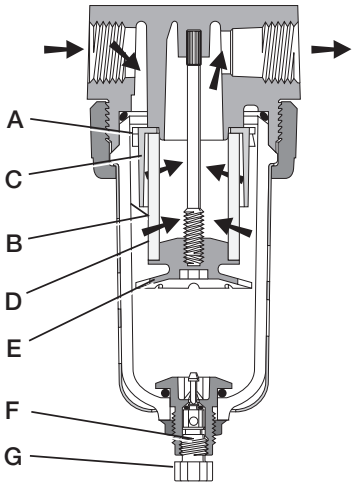

Reading Flow Charts to Size Filters

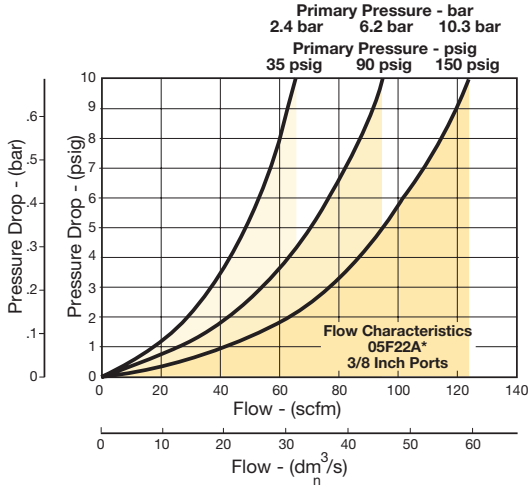

For inventory, lead times, and kit lookup, visit www.pdnplu.com

Parker Hannifin Corporation
Pneumatic Division
Richland, Michigan
www.parker.com/pneumatics

Tel: +45 63 12 83 00 | Email: ps@hymatik.com | www.hymatik.com | Hvidkaervej 27a, DK-5250 Odense SV, Denmark

Coalescing Filters

Coalescing filters are designed to remove 99.9% + of the liquid aerosols, both water and oil, and submicron particulate matter from your pneumatic system. These filters will provide oil free air for applications such as spray painting, air gauging, pneumatic instrumentation, printing and packaging.

Media Specifications

Grade	Coalescing Efficiency 0.3 to 0.6 Micron Particles	Maximum Oil Carryover[1] PPM w/w	Micron Rating	Pressure Drop (PSID)[2] @ Rated Flow	
				Media Dry	Media Wet With 10-20 wt. oil
6	99.97%	0.008	0.01	1.0	2-3
10	95%	0.85	1.0	0.5	0.5

[1] Tested per BCAS 860900 at 40 ppm inlet.
[2] Add dry + wet for total pressure drop.
D.O.P. = Dioctylphthalate

Element Selection

Element grade	Applications
6 (.01 Micron)	General air coalescing applications when total removal of liquid aerosols and suspended fines is required in all pressure ranges. Protection of air dryers, air gauging, air logic, modulating systems, critical air conveying, most breathing air systems, etc.
10 (.7 Micron)	Precoalescer or prefilter for Grade 6 to remove gross amounts of water and oil, or tenacious aerosols which are difficult to remove. Upgrading existing particulate equipment to coalescing without increase in pressure drop.

Reading Nomograms for Coalescing Filters

To size a coalescer, refer to the nomograms below. First determine the system pressure and find that pressure on the vertical axis on the left. Next, find the required flow rate on the middle vertical axis. Draw a connecting line between the two points extending to the middle vertical axis giving the recommended coalescer series. If the intersection on the model number axis is between models then choose the model above the intersection point insuring the proper flow in the unit.

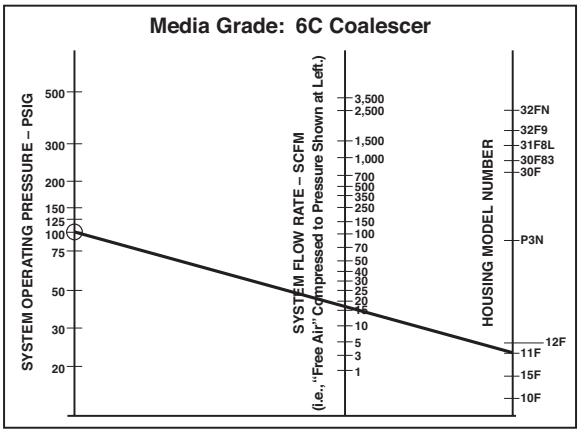

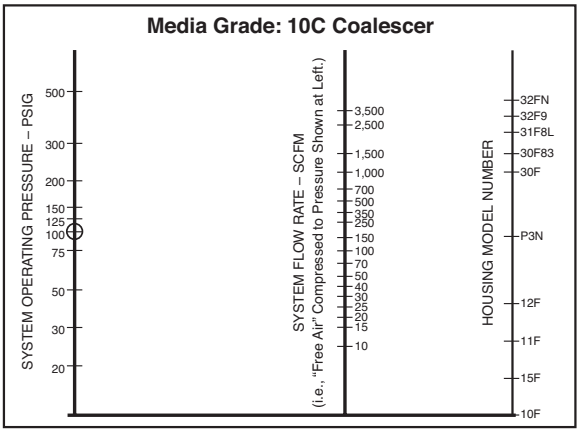

For inventory, lead times, and kit lookup, visit www.pdnplu.com

Parker Hannifin Corporation
Pneumatic Division
Richland, Michigan
www.parker.com/pneumatics

Tel: +45 63 12 83 00 | Email: ps@hymatik.com | www.hymatik.com | Hvidkaervej 27a, DK-5250 Odense SV, Denmark

Coalescing Filters (Oil Removal)

Specifically designed for the removal of solid particles, water and oil aerosols down to 0.01 micron. Maximum remaining oil content of air leaving the filter down to 0.01 ppm at 70°F (21°C) at a pressure of 100 psig (6.9 bar) using a typical compressor lubricant. Two filter element grades are offered to better meet your air quality requirements.

Grade 10 filter elements are used for most air coalescing applications where the removal of liquid aerosols and submicronic particles for general air quality is required. Protection of components such as air valves, cylinders, as well as air conveyors, air gaging, air bearings, air control circuits and paint spraying equipment are examples of specific end-use applications. This grade of filter element should be used as a prefilter for the Grade C coalescing filter.

Grade 6 high-efficiency filter elements are used where the removal of extremely fine particulate and virtually “oil-free” or high quality air is necessary. Specific end-use applications are protection of critical air control circuits, air logic systems, flow and temperature controllers, food processing, electronics, health care and film processing.

The contaminated air enters the element interior and is forced through a thick membrane of borosilicate glass fibers coated with epoxy **(A)**. Flow then passes through an outer structural support and, at this stage, has removed up to 99.97% + of the sub-micron particles evident in the contaminated air. These tiny droplets coalesce together and are blotted from the filter surface by the drain and release layers of non-woven glass felt and rayon cloth. The drops now begin a gravitational passage to the filter sump **(B)** where they can be manually or automatically drained. The clean, filtered air now passes through the outer screen plastic net and out into the pneumatic system. The Air Line Coalescing Filter removes liquid aerosols

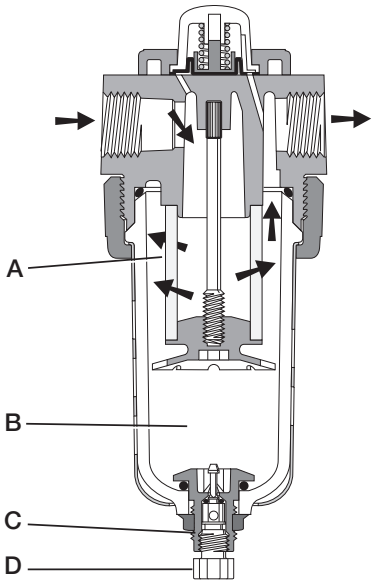

and sub-micron particulate matter. Collected liquids and particles in the “quiet zone” should be drained before their level reaches a height where they would be reentrained in the flowing air. This can be accomplished by the manual drain **(C)** which is actuated by twisting knob **(D)** counterclockwise. On the 30 Series, unscrew the drain valve **(E)** slightly until the liquid begins to drain.

Semi Automatic Drain

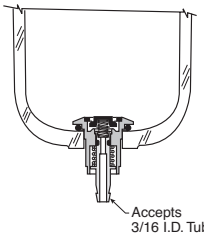

(Overnight Drain)

This drain offers a semi-automatic function when there is a differential pressure in the filter which occurs when system pressure is shut off. The drain can also be used manually by gripping it with your fingertips and pushing upward.

Automatic Pulse Drain

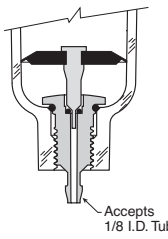

(Spitter Drain)

The diaphragm in this drain pulses when there is a pressure differential such as a valve cycling or cylinder stroking downstream. This action flexes the diaphragm and allows the filter to drain the entrapped water.

Automatic Float Drain

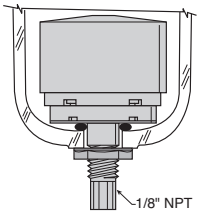

The float internal to this drain rises with increased liquid level. When the float rises, it opens a seat area allowing the trapped liquids to drain through the bottom.
A manual override can be pushed in the bottom of the drain to unseat the float if particulates create a block.

For inventory, lead times, and kit lookup, visit www.pdnplu.com

Parker Hannifin Corporation
Pneumatic Division
Richland, Michigan
www.parker.com/pneumatics

Tel: +45 63 12 83 00 | Email: ps@hymatik.com | www.hymatik.com | Hvidkaervej 27a, DK-5250 Odense SV, Denmark

Filter Technology – Mechanisms of Filtration

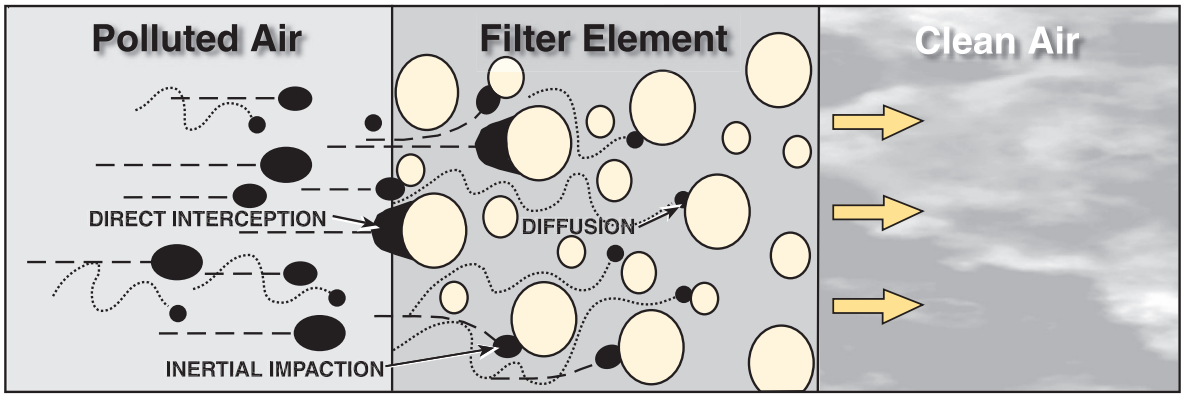

Coalescing Filters

Essentially, coalescing filters Grade 10 (.7 micron) & 6 (.01 micron), rely on what is known as mechanical filtration for their effectiveness. The main mechanisms of mechanical filtration are direct interception, inertial impaction and diffusion. Electrostatic attraction can have some bearing although the efficiency of coalescing filters is not dependent on this mechanism.

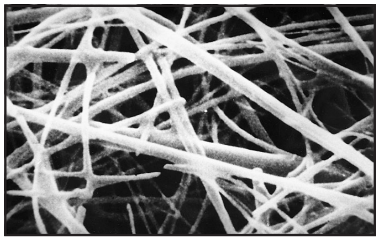

Above: Clean borosilicate microfiber seen at a magnification factor of 3900. *Right:* The same filter material in a contaminated state at the same degree of magnification.

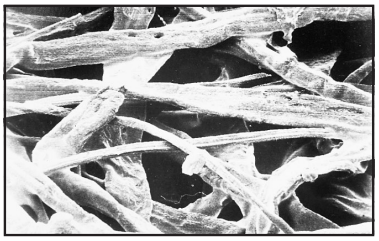

When all mechanisms are combined and utilized by a deep bed of the correct type of filter material, removal of virtually all particles whether liquid or solid, is achieved.

Direct Interception occurs when a particle collides with and adheres to a fiber of the filter material without deviating out of the streamline flow. This mechanism tends to take place on the surface of the filter material and affects mainly larger particles over 1 micron in size.

Inertial Impaction occurs when a particle is unable to follow the tortuous path around the filter fibers and eventually collides with and adheres to one of the fibers. Typically affecting particles in the 0.3 micron -1 micron size range.

Diffusion or Brownian Movement, as it is sometimes called, occurs with extremely small particles which tend to wander within the gas stream, increasing their chances of colliding with and adhering to a fiber. This usually affects particles below 0.3 micron in size. A degree of overlap takes place with the mechanisms, the extent varying on the conditions.

Pollution Size Chart

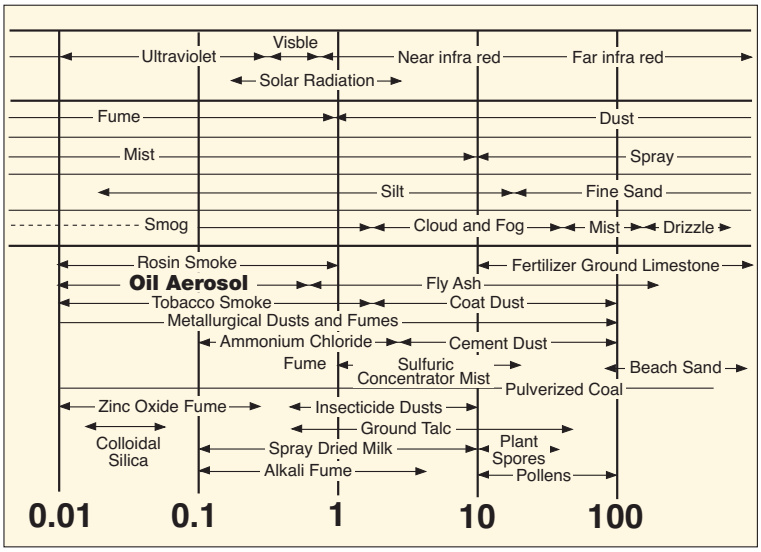

To assist in understanding the parameters of filtration, refer to this pollution size comparison chart. Look at the size of a major contaminant, oil aerosol! It is in the region of 0.01 - 0.8 micron. Tobacco smoke is also a liquid aerosol in a similar size band 0.01 -1.2 micron. Observe the smoke test yourself, appreciate the size of the problem! The smallest particle the human eye can see is in the order of 40 microns.

For inventory, lead times, and kit lookup, visit www.pdnplu.com

Parker Hannifin Corporation
Pneumatic Division
Richland, Michigan
www.parker.com/pneumatics

Tel: +45 63 12 83 00 | Email: ps@hymatik.com | www.hymatik.com | Hvidkaervej 27a, DK-5250 Odense SV, Denmark

Regulators

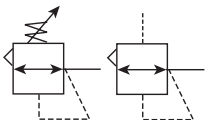

Air regulators are designed to provide quick response and accurate pressure regulation for the most demanding industrial applications.

Regulator Selection

1. Determine maximum system flow requirements.
2. Determine maximum allowable pressure drop at rated flow in scfm.
3. Refer to flow chart and select regulator by choosing the curve that offers minimum pressure drop at desired flow in scfm.

Reading Flow Charts to Size Regulators

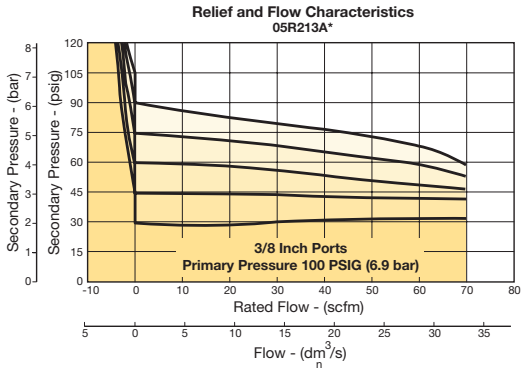

Once the required flow is determined for a pneumatic application the regulator or filter/regulator can be selected by using the flow chart. The chart serves two different purposes. To read the flow, use the right side of the chart. To read the relief characteristics use the left side of the chart. When reading the flow chart, first determine the secondary pressure that will be used. Find the appropriate pressure curve on the graph. Given an acceptable pressure drop for an application, follow the flow curve until it intersects the pressure drop point. This will give the flow at that particular pressure drop.

⚠ WARNING

Product rupture can cause serious injury.
Do not connect regulator to bottled gas.
Do not exceed Maximum primary pressure rating.

CAUTION:

REGULATOR PRESSURE ADJUSTMENT – The working range of knob adjustment is designed to permit outlet pressures within their full range. Pressure adjustment beyond this range is also possible because the knob is not a limiting device. This is a common characteristic of most industrial regulators, and limiting devices may be obtained only by special design. For best performance, regulated pressure should always be set by increasing the pressure up to the desired setting.

General Purpose Regulators

Used to provide a convenient and low cost method to reduce a supplied air pressure to a desired outlet pressure and transform a fluctuating air supply to a relatively constant reduced air pressure within the operating range of the regulator.

This type of regulator is generally used in a wide variety of applications where reduced pressure is highly desirable for energy conservation, safety requirements, air circuit control and air instrumentation.

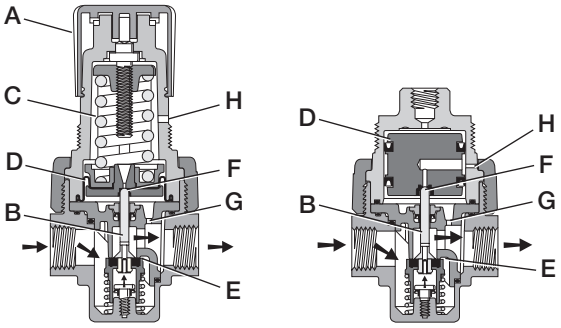

Operation

With the adjusting knob **(A)** turned fully counterclockwise (no spring load), and pressure supplied to the regulator inlet port, the valve poppet assembly **(B)** is closed. Turning the adjusting knob clockwise applies a load to control spring **(C)**. This load causes the piston /diaphragm **(D)** and the valve poppet assembly **(B)** to move downward allowing flow across the seat area **(E)** created between the poppet assembly and the seat. Pressure in the downstream line is sensed below the piston / diaphragm **(D)** and offsets the load of spring **(C)**. As downstream pressure rises, poppet assembly **(B)** and control piston **(C)** move upward until the area **(E)** is closed and the load of the spring **(C)** and pressure under piston / diaphragm **(D)** are in balance. A reduced outlet pressure has now been obtained, depending on spring load. Creating a demand downstream, such as opening a valve, results in a reduced pressure under the piston / diaphragm **(D)**. The load of control spring **(C)** now causes the poppet assembly to move downward opening seat area **(E)** allowing air to flow to meet the downstream demand. The flow of downstream air is metered by the amount of opening **(E)**.

During low flow requirements, the amount of opening at the seat **(E)** is small, while at high flows it is large. The downstream pressure signal, which regulates the amount of opening, requires an adjustment over this range, in order to attempt a constant output. This adjustment is the orifice **(G)**, which is sized and located in such a manner as to provide a compensation to the downstream pressure signal transmitted to the piston. This effect is called aspiration and its effect is to maintain downstream pressure nearly constant over a wide range of flow demands.

Should downstream pressure exceed the desired regulated pressure, the excess pressure will cause the piston / diaphragm **(D)** to move upward against control spring **(C)**, open vent hole **(F)**, and vent the excess pressure to atmosphere through the hole in the bonnet **(H)**. (This occurs in the relieving type regulator only.)

For inventory, lead times, and kit lookup, visit www.pdnplu.com

Parker Hannifin Corporation
Pneumatic Division
Richland, Michigan
www.parker.com/pneumatics

Tel: +45 63 12 83 00 | Email: ps@hymatik.com | www.hymatik.com | Hvidkaervej 27a, DK-5250 Odense SV, Denmark

Filter / Regulators

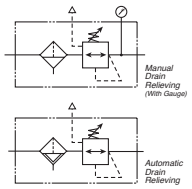

Integral Filter / Regulators are an excellent choice where accurate pressure regulation and high moisture removal efficiency are required in a space saving package.

Filter / Regulator Selection

1. Determine maximum system flow requirements.
2. Determine maximum allowable pressure drop at rated flow in scfm.
3. Refer to flow chart and select filter/regulator by choosing the curve that offers minimum pressure drop at desired flow in scfm.

Reading Flow Charts to Size Filter / Regulators

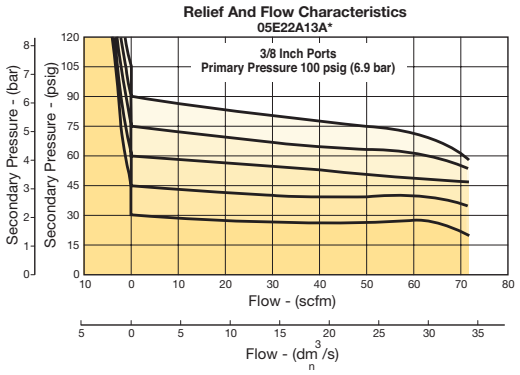

Once the required flow is determined for a pneumatic application the regulator or filter/regulator can be selected by using the flow chart. The chart serves two different purposes. To read the flow, use the right side of the chart. To read the relief characteristics use the left side of the chart. When reading the flow chart, first determine the secondary pressure that will be used. Find the appropriate pressure curve on the graph. Given an acceptable pressure drop for an application, follow the flow curve until it intersects the pressure drop point. This will give the flow at that particular pressure drop.

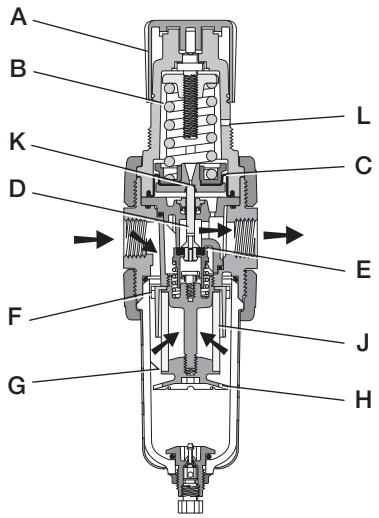

Operation

Turning the knob **(A)** clockwise applies a load to control spring **(B)** which forces the piston/diaphragm **(C)** and valve poppet assembly **(D)** to move downward allowing filtered air to flow through the seat area **(E)** created between the poppet assembly and the seat. "First stage filtration" begins when air pressure supplied to the inlet port is directed through deflector plate **(F)** causing a swirling centrifugal action forcing liquids and coarse particles to the inner bowl wall **(G)** and down below the lower baffle (H) to the quiet zone. After liquids and large particles are removed in the first stage of filtration "second stage filtration" occurs as air flows through element **(J)** where smaller particles are filtered out and retained. The air flow now passes through seat area **(E)** to the outlet port of the unit. Pressure in the downstream line is sensed below the piston/diaphragm **(C)** and offsets the load of control spring **(B)**. When downstream pressure reaches the set-point, poppet valve assembly **(D)** and piston/diaphragm **(C)** move upward closing seat area **(E)**. Should downstream pressure exceed the desired regulated pressure, the excess pressure will cause the piston/diaphragm **(C)** to move upward opening vent hole **(K)** venting the excess pressure to atmosphere through the hole in the bonnet **(L)**. (This occurs in the standard relieving type regulator only.)

⚠ WARNING

Product rupture can cause serious injury.
Do not connect regulator to bottled gas.
Do not exceed Maximum primary pressure rating.

CAUTION:

REGULATOR PRESSURE ADJUSTMENT – The working range of knob adjustment is designed to permit outlet pressures within their full range. Pressure adjustment beyond this range is also possible because the knob is not a limiting device. This is a common characteristic of most industrial regulators, and limiting devices may be obtained only by special design. For best performance, regulated pressure should always be set by increasing the pressure up to the desired setting.

Tel: +45 63 12 83 00 | Email: ps@hymatik.com | www.hymatik.com | Hvidkaervej 27a, DK-5250 Odense SV, Denmark

Micro-Mist Lubricators



Micro-Mist Air Lubricators are designed to provide optimum and uniform lubrication with fine micro-mist particles of 2 micron or smaller, to pneumatic components even through complex piping arrangements.

Lubricator Selection

1. Determine maximum system flow requirements.
2. Determine maximum allowable pressure drop at rated flow in scfm.
3. Refer to flow chart and select lubricator by choosing the curve that offers minimum pressure drop at desired flow in scfm.

Reading Flow Charts to Size Micro-Mist Lubricators

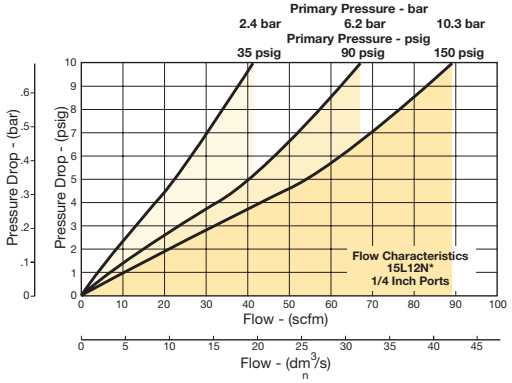

Once the required flow is determined for a pneumatic application the lubricator can be selected by using the flow chart. To read the lubricator flow chart, first determine the inlet pressure that will be used. Find the appropriate pressure curve on the graph. Each graph will contain three pressure curves. If the required inlet pressure is not on the graph, interpolate a similar curve for the required pressure. Next, determine the acceptable pressure drop across the lubricator and locate it on the vertical axis. Find the intersection point of the acceptable pressure drop and the inlet pressure curve. At this point follow a vertical path downward to view the flow in scfm.

If the flow is too low, select a larger port size or body size to give the required flow. If the flow is higher than necessary, select a smaller port size or body size to give the required flow.

The Micro-Mist lubricators inject a micro-mist of oil into the flowing air stream to automatically provide the correct amount of internal lubrication for air tools and other pneumatic devices. This type of lubricator can be precisely adjusted to a very low oil flow rate because only a portion of the oil drops seen in the sight dome goes downstream. The lubricator should be used where only a very minute amount of lubricant is desirable or where it is necessary for the oil to remain in suspension in the air stream for long distances.

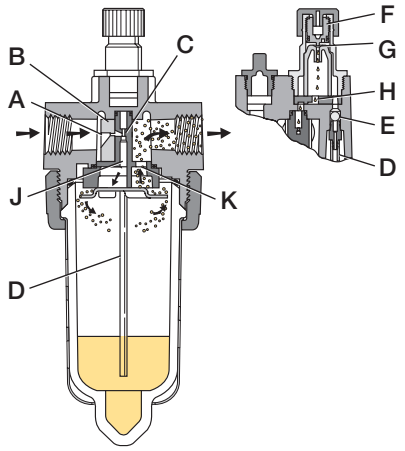

Operation

Air flowing through the unit goes through two paths. At low air flow rates, the majority of the air flows through venturi section **(A)**. The rest of the air slightly deflects and flows by the flapper **(B)**. The velocity of the air flowing through venturi section **(A)** creates a pressure drop at throat section **(C)**. This lower pressure allows oil to be forced from the reservoir through the pickup tube **(D)** past the check ball **(E)**, to the dome assembly where the rate of oil flow is controlled by metering screw **(F)**. Rotation of the metering screw **(F)** in the counterclockwise direction increases the oil flow rate; in the clockwise direction decreases the oil flow rate.

Oil then flows through the clearance between the inner and outer sight domes **(G)** where drops are formed and drip into the nozzle tube **(H)**. Here it is then broken into fine particles as it expands into the low pressure venturi. From there, the atomized oil flows through the precision orifice **(J)**. This action causes the larger particles of oil to fall back into the reservoir where it can recirculate through the system. The remaining mist of fine particles (5 micron or smaller – about 3% of which passed through the sight dome) is then carried through opening **(K)** where it joins and mixes with air that bypassed the flapper **(B)**. As air flow rate increases, the flapper **(B)** deflects, allowing most of the inlet air to bypass the venturi section **(A)**.

However, a proportion of the inlet air passes through the venturi, assuring that oil delivery increases linearly with increased air flow rate. This proportioning method is advantageous at low inlet flows because the venturi design remains efficient.

The check ball **(E)** prevents reverse oil flow down the pickup tube when air flow stops. Thus, oil delivery can resume immediately when air flow restarts. **Micro-Mist Lubricators can only be filled when the air supply is shut off.**

For inventory, lead times, and kit lookup, visit www.pdnplu.com

Parker Hannifin Corporation
Pneumatic Division
Richland, Michigan
www.parker.com/pneumatics

Tel: +45 63 12 83 00 | Email: ps@hymatik.com | www.hymatik.com | Hvidkaervej 27a, DK-5250 Odense SV, Denmark

Mist Lubricators

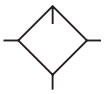

Mist Air Lubricators are designed to provide lubrication for most general applications in a pneumatic system. Units should be installed close to the application ensuring effective distribution of oil to pneumatic components.

Lubricator Selection

1. Determine maximum system flow requirements.
2. Determine maximum allowable pressure drop at rated flow in scfm.
3. Refer to flow chart and select lubricator by choosing the curve that offers minimum pressure drop at desired flow in scfm.

Reading Flow Charts to Size Mist Lubricators

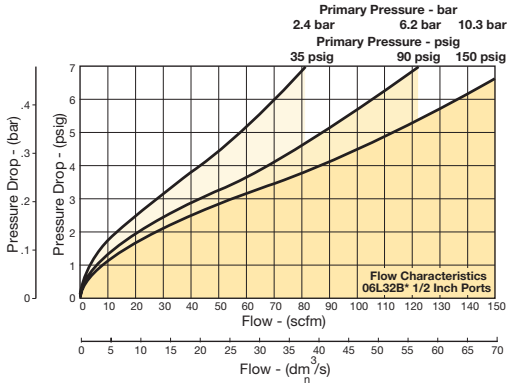

Once the required flow is determined for a pneumatic application the lubricator can be selected by using the flow chart. To read the lubricator flow chart, first determine the inlet pressure that will be used. Find the appropriate pressure curve on the graph. Each graph will contain three pressure curves. If the required inlet pressure is not on the graph, interpolate a similar curve for the required pressure. Next, determine the acceptable pressure drop across the lubricator and locate it on the vertical axis. Find the intersection point of the acceptable pressure drop and the inlet pressure curve. At this point follow a vertical path downward to view the flow in scfm.
If the flow is too low, select a larger port size or body size to give the required flow. If the flow is higher than necessary, select a smaller port size or body size to give the required flow.

F442 Oil



Quantity	Part numbers
1 Quart	F442001
1 Gallon	F442002
12 Quart Case	F442003
4 Gallon Case	F442005

Petroleum based oil of 100 to 200 SSU viscosity at 100°F and an aniline point greater than 200°F

(DO NOT USE OILS WITH ADDITIVES, COMPOUNDED OILS CONTAINING SOLVENTS, GRAPHITE, DETERGENTS, OR SYNTHETIC OILS.)

These lubricators inject an oil aerosol into the flowing air stream to automatically provide the proper amount of internal lubrication to air operated tools or other pneumatic devices.

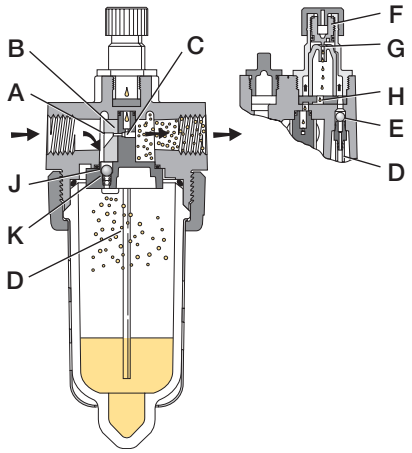

Operation

Air flowing through the unit goes through two paths. At low air flow rates, the majority of the air flows through venturi section **(A)**. The rest of the air slightly deflects and flows by the flapper **(B)**, restrictor disc **(M)** on the 09L. The velocity of the air flowing through venturi section **(A)** creates a pressure drop at throat section **(C)**. This lower pressure allows oil to be forced from the reservoir through the pickup tube **(D)** past the check ball **(E)**, to the dome assembly where the rate of oil flow is controlled by metering screw **(F)**. Rotation of the metering screw **(F)** in the counterclockwise direction increases the oil flow rate; in the clockwise direction decreases the oil flow rate. Oil then flows through the clearance between inner and outer sight domes **(G)** where drops are formed and drip into the nozzle tube **(H)**. On the 09L, oil flows through the drip tube **(F)** where drops are formed and drip into the throat section **(C)**. Here it is then broken into fine particles and mixed with the swirling air to be carried to the venturi outlet where it joins the air by passing the flapper **(B)**, **(M)**. As air flow rate increases, the flapper **(B)**, **(M)** deflects, allowing a greater part of the additional air to bypass the venturi section **(A)**. This assures the oil delivery rate increases linearly with increased air flow rate. The check ball **(E)** assures that when there is no oil flow the oil in the pickup tube does not return to the reservoir.

The bowl can be filled under pressure due to the action of the check ball **(J)**. When the fill cap is removed, air in the bowl escapes and pressure forces the check ball **(J)** to nearly seal at **(K)**. When the fill cap is replaced, the small amount of air flow past check ball **(J)** builds up pressure and together with the spring forces the check ball **(J)** off seat **(K)**, letting full line pressure into the bowl.

For inventory, lead times, and kit lookup, visit www.pdnplu.com

Parker Hannifin Corporation
Pneumatic Division
Richland, Michigan
www.parker.com/pneumatics

Tel: +45 63 12 83 00 | Email: ps@hymatik.com | www.hymatik.com | Hvidkaervej 27a, DK-5250 Odense SV, Denmark

Dial Regulator

The Dial Regulator is a constant bleed, piston operated regulator. The pilot controlled pressure reducing valve provides exceptionally high air flow with steady pressure control and minimal secondary pressure drop. The non-rising adjustment knob provides quick selection of the desired secondary pressure in less than one full turn. The adjustment knob also can serve as the pressure indicator thereby eliminating the need for a pressure gauge.

This regulator is specifically designed for applications requiring more accurate air circuit control, high air flow capacity with flat performance curves and quick regulator adjustment. The regulator can be used as a conventional regulator for standard air circuits or as a pilot regulator to provide pressure to the control chamber of a pilot operated (slave) regulator.

⚠ WARNING

Product rupture can cause serious injury.
Do not connect regulator to bottled gas.
Do not exceed Maximum primary pressure rating.

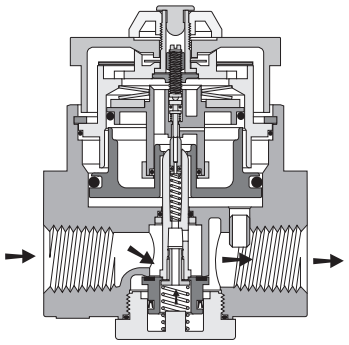

Operation

To set the regulator, turn the large dial adjustment knob to the desired secondary set pressure. This opens the pilot valve seat allowing air flow into the control chamber which forces the lower piston downward against the relief seat and opens the main valve. At the same time, the air in the control chamber forces the upper piston upward against Belleville springs which closes the pilot valve seat when the set pressure is attained. Secondary pressure in the chamber is now balanced against the control pressure through the lower piston. If demand flow increases, the constant control pressure will force the lower piston and the main valve further downward, and allow more flow downstream. A higher than desired secondary pressure will force the lower piston upward, closing the main valve seat and opening the main relief valve seat thereby allowing air to relieve to the atmosphere. For best performance, regulated pressure should always be set by increasing the pressure up to the desired setting.

Tel: +45 63 12 83 00 | Email: ps@hymatik.com | www.hymatik.com | Hvidkaervej 27a, DK-5250 Odense SV, Denmark

Precision Regulators

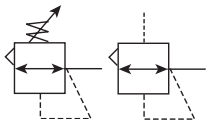

Air regulators are designed to provide quick response and accurate pressure regulation for the most demanding industrial applications.

Regulator Selection

1. Determine maximum system flow requirements.
2. Determine maximum allowable pressure drop at rated flow in scfm.
3. Refer to flow chart and select regulator by choosing the curve that offers minimum pressure drop at desired flow in scfm.

Reading Flow Charts to Size Regulators

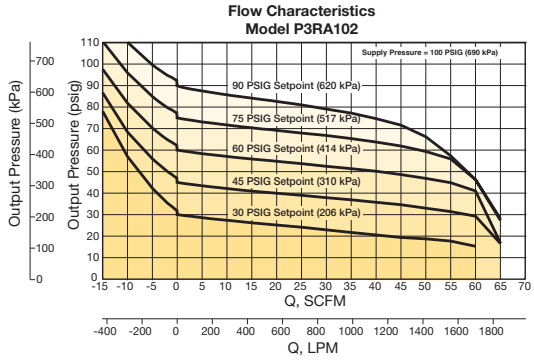

Once the required flow is determined for a pneumatic application the regulator or filter/regulator can be selected by using the flow chart. The chart serves two different purposes. To read the flow, use the right side of the chart. To read the relief characteristics use the left side of the chart. When reading the flow chart, first determine the secondary pressure that will be used. Find the appropriate pressure curve on the graph. Given an acceptable pressure drop for an application, follow the flow curve until it intersects the pressure drop point. This will give the flow at that particular pressure drop.

Precision Regulator

For use in applications that require reliable performance and accurate pressure control. This type of regulator is generally used for material handling systems, flow and temperature controllers, critical air control circuits, medical and scientific test equipment, and valve positioners.

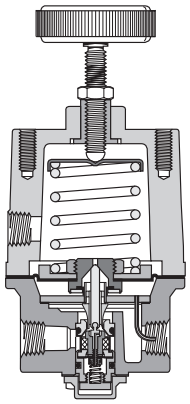

Operation

Set the desired secondary pressure by turning the adjustment knob clockwise. This action increases the regulating spring force against the top of the diaphragm disc. When the spring force above exceeds the air pressure beneath the diaphragm, it is transmitted by the valve stem and opens the valve. Airflow through the regulator now occurs.

A precisely designed and positioned aspirator tube constantly transmits the secondary pressure to the under side of the diaphragm so that during flow conditions any pressure loss can be quickly compensated for. When flow is no longer required, the outlet pressure increases slightly, allowing the diaphragm to rise, the valve to close, and set pressure to be maintained.

On self-relieving models, if outlet pressure should increase above the set pressure, the diaphragm will rise therefore opening the relief seal between the diaphragm and the valve. The excess outlet pressure is then vented through the diaphragm orifice into the bonnet and subsequently to the atmosphere through an orifice in the bonnet. For best performance, regulated pressure should always be set by increasing the pressure to the desired setting.

⚠ WARNING

Product rupture can cause serious injury.
Do not connect regulator to bottled gas.
Do not exceed Maximum primary pressure rating.

CAUTION:

REGULATOR PRESSURE ADJUSTMENT – The working range of knob adjustment is designed to permit outlet pressures within their full range. Pressure adjustment beyond this range is also possible because the knob is not a limiting device. This is a common characteristic of most industrial regulators, and limiting devices may be obtained only by special design. For best performance, regulated pressure should always be set by increasing the pressure up to the desired setting.

For inventory, lead times, and kit lookup, visit www.pdnplu.com

Parker Hannifin Corporation
Pneumatic Division
Richland, Michigan
www.parker.com/pneumatics

Tel: +45 63 12 83 00 | Email: ps@hymatik.com | www.hymatik.com | Hvidkaervej 27a, DK-5250 Odense SV, Denmark

Precision Regulators Application Guide

Pneumatic pressure regulators are designed to provide a constant pressure output from a fluctuating supply pressure – much the way an electronic voltage regulator works. Pressure regulators provide varying degrees of accuracy with regard to their reduced pressure output. General Purpose pressure regulators work for most fluid power applications. However, for more pressure-critical applications precision regulators can provide the customer with the control they need.

A partial listing of things that can potentially cause regulator output pressure variation are:

- Temperature changes
- Inlet pressure changes
- Variations in flow
- Excess downstream pressure
- Cycling
- Time
- Leakage

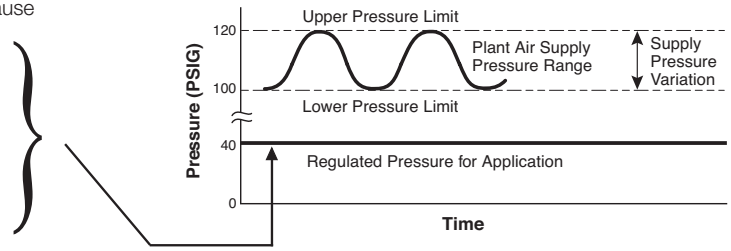

Who needs precision regulators?

Design level applications:

When designing a pneumatic system it is important to determine not only the air flow that the application will require but also the acceptable level of pressure variation. Some pneumatic applications cannot tolerate fluctuations in pressure. These applications can include static situations with only a steady pressure maintained, or dynamic flow situations involving any number of changing variables in play while trying to maintain a constant pressure.

Problem solving device for existing applications:

Sometimes an existing pneumatic application does not meet the customer's needs with regards to pressure control and/or stability. Any or all of the variables listed above can cause issues with pressure stability.
As applications are expanded, added on to, or modified the pressure and flow requirements can change.

How do precision regulators differ from general purpose pneumatic regulators?

Examples ➔	**High Precision Regulators** P3RA302, P3RA102, P3RA102BP, P3RA171	**Semi-Precision Regulators** 27R, Dial Regulators, R216	**General Purpose Regulators** 05R, 06R, 07R, P3NR, R119
Sensitivity: Reduced pressure repeatability/variation under no-flow condition	.005 to .010 psig (1/8" to 1/4" of water column)	1 to 2 psig	3 to 4 psig
Regulator's ability to control back pressure accurately: *key for cylinder applications	Begins to relieve at .005 to .010 psig overpressure	Begins to relieve at .5 to 2 psig overpressure	Begins to relieve at 5 to 10 psig overpressure
Regulator's ability to maintain set pressure under varying flow, input pressure, temperature conditions:	High	Medium	Standard
Constant Bleed - does the regulator constantly bleed a small volume of air to the atmosphere to maintain stability?	Yes	Yes	No

1" Water Column = .0360 PSI

1 psi = 27.7612 Inches Water Column

Tel: +45 63 12 83 00 | Email: ps@hymatik.com | www.hymatik.com | Hvidkaervej 27a, DK-5250 Odense SV, Denmark

Application Chart

Original Equipment Manufacturers (OEMs)

Air Gauging	Manufacturers of Air Gauging Equipment.
Anesthesia Equipment	Manufacturers
Calibration Stands	Similar to Test Stands
Clamping Pressure Control	End Effect Grippers, Roll Loading
Control Panels	Manufacturers and Users
Coordinate Measuring Machines	Manufacturers use in Force Counterbalance Applications in Z-axis
Dispensing Equipment	Adhesive, Paint, or any other form of Liquid or Gas
Food Process Machinery	Manufacturers
Gas Analyzers	Used for Reference and Calibration Air Pressures
Ink or Paint Robotics Spraying Systems	Manufacturers use to Maintain an Even Pressure on System
Leak Testing Equipment	Manufacturers of Equipment that Detects Leaks (i.e., Plastic Bottles)
Medical Equipment	Manufacturers that Utilize for Blood Processing and Sampling as Examples
Oxygen Ventilators	Manufacturers
Pharmaceutical Process Machinery	Pill or Tablet Making Machines
Phone Cable Pressurization Systems	Manufacturers
Polishing Machinery	Used to Maintain Even Pressure on Polishing Head
Semi-conductor Manufacturing Machinery	Manufacturers
Smoke Stack Analyzers	Used for Reference and Calibration Air Pressures
Soil or Environmental Analysis Equipment	Used for Reference and Calibration Air Pressures
Tank Blanketing	Maintain Pressure on Top Level of a Tank or Storage Vessel
Test Equipment	Similar to Test Stands
Test Stands	Manufacturers of Test Stands, Laboratory Test Stands, Engineering Test Stands, Production Test Stands
Tool Balancers High Application. Used as helps suspend the when not in use.	Manufacturers of Tool Balancers, Manipulators, and Articulating Arms use Relief Capacity Precision Regulators in a Force-balancing part of a Pneumatic Counter-balance System, the Regulator tool in the air and then makes it easy to move out of the way
Web Tensioning	Machinery Builders for Printing Presses, Paper Converting, Packaging, Textiles, Plastics. Primarily Unwind Stands and Rewind Stands.

System Integrators

Automation Integrators	Anyone Involved in Designs or Projects that Automate Processes

Energy Controls Systems

HVAC	Anyone who would be involved in Designs that would include Damper and Louvre Control for HVAC Applications

End Users

- Instrumentation Supervisors
- Instrumentation Technicians
- Project Engineers
- Store Room Supervisors

MRO

- Chemical
- Petrochemical
- Pulp & Paper
- Food & Drug
- Refineries
- Power
- Mining
- Oil & Gas

Tel: +45 63 12 83 00 | Email: ps@hymatik.com | www.hymatik.com | Hvidkaervej 27a, DK-5250 Odense SV, Denmark

Parker is protecting your most valuable assets…

OSHA® www.osha.gov
Standard 190.147

- This applies to the servicing and maintenance of a machine or equipment.
- Any new, replacement, repair, or renovation to a machine must include an energy isolation device that can accept a lock out device.
- Lock out devices should not be used for any other purposes
- Verification of energy isolation is required

ANSI
Standard Z244

- This applies to all machines
- Lockout / tagout is the primary method of hazardous energy control
- Machines shall be designed, manufactured, supplied, and installed with energy isolating devices

ANSI B11.0
B11.TR6

PMMI B155.1

- B11.0 applies to a broad range of machines, B11.TR6 is specific to machine tools, and B155.1 is specific to packaging and converting machines
- Energy isolating device shall:
  - Be capable of being locked in the OFF position only
  - Be easy to operate
  - Have an exhaust port equal or greater than its supply port
  - Have a pressure indicator that is visible to an operator to verify line is relieved of pressure

…By offering the best in pneumatic safety for machine maintenance:



Traditional Ball Valve

Not a dedicated energy isolation device	✖
Not a full exhaust port	✖
No verification of line exhaust	✖
Can be locked ON	✖
Not easily identifiable	✖



Parker Solution

✔	Dedicated energy isolation device
✔	Full exhaust port
✔	Verification of line exhaust
✔	Only lockable in OFF position
✔	Easily identifiable

Tel: +45 63 12 83 00 | Email: ps@hymatik.com | www.hymatik.com | Hvidkaervej 27a, DK-5250 Odense SV, Denmark

Compressed air and its purification from generation to application

Compressed air is an essential power source that is widely used throughout industry. This safe, powerful and reliable utility can be the most important part of your production process. However, your compressed air will contain water, dirt, wear particles and even degraded lubricating oil which all mix together to form an unwanted condensate. This condensate often acidic, rapidly wears tools and pneumatic machinery, blocks valves and orifices causing high maintenance and costly air leaks. It also corrodes piping systems and can bring your production process to an extremely expensive standstill!

The quality of air required throughout a typical compressed air system can vary.

It is highly recommended that the compressed air is treated prior to entry into the distribution system as well as at each usage point or application.

This approach to system design provides the most cost effective solution to system purification as it not only removes the contamination already in the distribution system, it ensures that only the most critical areas receive air treated to the highest level.

In many instances the compressed air system will be supplying air to more than one application and although the purification equipment specified in the compressor room would remain unchanged, the point of use protection will vary depending upon the air quality requirements of each application.

In many cases this action alone is not enough, as modern production systems and processes demand an even higher level of air quality. Where required, “point of use” filtration, refrigeration or desiccant air dryers can provide the correct air quality, without the need for drying the complete compressed air installation, which can be both costly and totally unnecessary.

Sources of contamination found in a compressed air system

Contaminants in a compressed air system can generally be attributed to the following:

The quality of air being drawn into the compressor
Air compressors draw in a large volume of air from the surrounding atmosphere containing large numbers of airborne contaminants.

The type and operation of the air compressor
The air compressor itself can also add contamination, from wear particles to coolants and lubricants.

Compressed air storage devices and distribution systems
The air receiver and system piping are designed to store and distribute the compressed air. As a consequence, they will also store the large amounts of contaminants drawn into the system. Additionally, piping and air receivers will also cool the moist compressed air forming condensate which causes damage and corrosion.

Atmospheric dirt

Atmospheric air in an industrial environment typically contains 183 million per yd^3 (140 million per m^3) of dirt particles. 80% of these particles are less than 2 microns in size and are too small to be captured by the compressor intake filter, therefore passing directly into the compressed air system.

Water vapor, condensed water and water aerosols

Atmospheric air contains water vapor (water in a gaseous form). The ability of compressed air to hold water vapor is dependent upon it's temperature. The higher the temperature, the more water vapor that can be held by the air. During compression, the air temperature is increased significantly, which allows it to easily retain the incoming moisture. After the compression stage, air is normally cooled to a usable temperature. This reduces the airs ability to retain water vapor, resulting in a proportion of the water vapor being condensed into liquid water which is removed by a condensate drain fitted to the compressor after-cooler. The air leaving the after-cooler is now 100% saturated with water vapor and any further cooling of the air will result in more water vapor condensing into liquid water. Condensation occurs at various stages throughout the system as the air is cooled further by the air receiver, piping and the expansion of valves, cylinders, tools and machinery. The condensed water and water aerosols cause corrosion to the storage and distribution system, damage production equipment and the end product. It also reduces production efficiency and increases maintenance costs. Water in any form must be removed to enable the system to run correctly and efficiently.

Rust and pipescale

Rust and pipescale can be found in air receivers and the piping of “wet systems” (systems without adequate purification equipment) or systems which were operated “wet” prior to purification being installed. Over time, this contamination breaks away to cause damage or blockage in production which can also contaminate final product and processes.

Micro-organisms

Bacteria and viruses will also be drawn into the compressed air system through the compressor intake and warm, moist air provides an ideal environment for the growth of micro-organisms. If only a few micro-organisms were to enter a clean environment, a sterile process or production system, enormous damage could be caused that not only diminishes product quality, but may even render a product entirely unfit for use and subject to recall.

Liquid oil and oil aerosols

Most air compressors use oil in the compression stage for sealing, lubrication and cooling. During operation, lubricating oil is carried over into the compressed air system as liquid oil and aerosols. This oil mixes with water vapor in the air and is often very acidic, causing damage to the compressed air storage and distribution system, production equipment and final product.

Oil vapor

In addition to dirt and water vapor, atmospheric air also contains oil in the form of unburned hydrocarbons. The unburned hydrocarbons drawn into the compressor intake as well as vaporized oil from the compression stage of a lubricated compressor will carry over into a compressed air system where it can cool and condense, causing the same contamination issues as liquid oil.

Tel: +45 63 12 83 00 | Email: ps@hymatik.com | www.hymatik.com | Hvidkaervej 27a, DK-5250 Odense SV, Denmark

Compressed air quality standards – ISO 8573

ISO 8573 is the group of International standards relating to the quality of compressed air and consists of nine separate parts. Part 1 specifies the quality requirements of the compressed air and parts 2 - 9 specify the methods of testing for a range of contaminants.

ISO 8573.1 : 2010 is the primary document used from the ISO 8573 series and it is this document which allows the user to specify the air quality or purity required at key points in a compressed air system.

ISO8573-1 lists the main contaminants as Solid Particulate, Water and oil. The purity levels for each contaminant are shown in separate tables, however for ease of use, this document combines all three contaminants into one easy to use table.

ISO8573-1:2010 Class	Solid Particulate				Water		Oil
	Maximum number of particles per m^3			Concentration	Vapor	Liquid	Total oil (aerosol, liquid and vapor)
	0.1 - 0.5 micron	0.5 - 1 micron	1 - 5 micron	mg/m^3	Pressure Dewpoint	g/m^3	ppm (mg/m^3)
0	As specified by the equipment user or supplier and more stringent than Class 1						
1	≤ 20,000	≤ 400	≤ 10	—	≤ -94°F (-70°C)	—	0.008 (0.01)
2	≤ 400,000	≤ 6,000	≤ 100	—	≤ -40°F (-40°C)	—	0.08 (0.1)
3	—	≤ 90,000	≤ 1,000	—	≤ -4°F (-20°C)	—	0.83 (1)
4	—	—	≤ 10,000	—	≤ 37°F (3°C)	—	4.2 (5)
5	—	—	≤ 100,000	—	≤ 45°F (7°C)	—	—
6	—	—	—	≤ 5	≤ 50F (10°C)	—	—
7	—	—	—	5 - 10	—	≤ 0.5	—
8	—	—	—	—	—	0.5 - 5	—
9	—	—	—	—	—	5 - 10	—
X	—	—	—	≤ 10	—	≤ 10	≤ 10

Specifying air purity in accordance with ISO 8573-1:2010

When specifying the purity of air required, the standard must always be referenced, followed by the purity class selected for each contaminant (a different purity class can be selected for each contaminant if required). An example of how to write an air quality specification is shown below:

Example:

ISO 8573-1:2010 Class 1.2.1

ISO8573-1:2010 refers to the standard document and its revision, the three digits refer to the purity classifications selected for solid particulate, water and total oil. Selecting an air purity class of 1.2.1 would specify the following air quality when operating at the standard's reference conditions:

Class 1, Particulate
In each cubic meter of compressed air, the particulate count should not exceed 20,000 particles in the 0.1 - 0.5 micron size range, 400 particles in the 0.5 - 1 micron size range and 10 particles in the 1 - 5 micron size range.

Class 2, Water
A pressure dewpoint (PDP) of -40°F (-40°C) or better is required and no liquid water is allowed.

Class 1, Oil
In each cubic meter of compressed air, not more than 0.01mg of oil is allowed. This is a total level for liquid oil, oil aerosol and oil vapor.

Cost effective system design

To achieve the stringent air quality levels required for today's modern production facilities, a careful approach to system design, commissioning and operation must be employed.

Treatment at one point alone is not enough and it is highly recommended that the compressed air is treated in the compressor room to a level that will provide general purpose air to the site and also protect the distribution piping.

Point of use purification should also be employed,not only to remove any contamination remaining in the distribution system, but also with specific attention on the quality of air required by each application. This approach to system design ensures that air is not "over treated" and provides the most cost effective solution to high quality compressed air.

Tel: +45 63 12 83 00 | Email: ps@hymatik.com | www.hymatik.com | Hvidkaervej 27a, DK-5250 Odense SV, Denmark

Up to 99% of the total liquid contamination found in a compressed air system is water.

Oil is perceived to cause the most problems as it is seen emanating from open drain points and exhausting valves, however, in the majority of instances, it is actually oily condensate (oil mixed with water) that is being observed.

How much water can be found in a typical compressed air system?

The amount of water in a compressed air system is staggering. A small 100 scfm (2.8m^3/min) compressor and refrigeration dryer combination, operating for 4,000 hours in typical climatic conditions can produce approximately 2,200 gallons (8,328 liters) of liquid condensate per year.

If the compressor is oil lubricated with a typical 2ppm (2 mg/m^3) oil carryover, then although the resulting condensate would visually resemble oil, oil would in fact account for less than 0.1% of the overall volume and it is this resemblance to oil to which a false association is made.

The example above assumes uses a small compressor to highlight the large volume of condensate produced. If a compressed air system was operated in warmer, more humid climates, or with larger compressors installed, running for longer periods, the volume of condensate would increase significantly.

Contamination and types of compressors

It is often believed that the level of compressed air purification equipment required in a system is dependent upon the type of compressor used. Contamination in a compressed air system originates from many sources and is not related solely to the compressor or it's lubricants. No matter what compressor type is selected, adequate filtration and separation products will be required to remove the large volume of dirty contaminated water as well as the dirt, rust, pipescale and microbiological contamination in the system.

Preventative maintenance provides you with the following benefits:

- Lowest operating costs
- Superior compressed air quality
- Continued protection of downstream equipment and processes
- Peace of mind

Compressed air and it's purification

Having identified the different types of contamination that can be found within a compressed air system, we can now examine the purification technologies available for it's removal.

Particle and coalescing filters

Coalescing filters are probably the most important items of purification equipment in any compressed air system. They are designed to remove oil and water aerosols using mechanical filtration techniques and have the additional benefit of removing solid particulate to very low levels (as small as 0.01 micron in size). Installed in pairs, most users believe one to be an oil removal filter and the other to be a particulate filter, when in fact, the pair of filters both perform the same function. The first filter, a general purpose filter is used to protect the high efficiency filter against bulk contamination. This "dual filter" installation ensures a continuous supply of high quality compressed air with low operational costs and minimal maintenance time.

Bulk liquid removal high efficiency water separators

Used to protect filters in systems where excessive cooling takes place in distribution piping. Water Separators will remove in excess of 98% of bulk liquid contamination through centrifugal separation techniques.

Refrigeration dryers

Refrigeration dryers work by cooling the air, so are limited to positive pressure dewpoint ratings to prevent freezing of the condensed liquid. Ideal for general purpose applications, they typically provide pressure dewpoints of 38°F (3°C), 45°F (7°C) or 50°F (10°C) pdp. Air is reheated before it re-enters the system to prevent piping from “sweating” in humid conditions. Refrigeration dryers are not suitable for installations where piping is installed in ambient temperatures below the dryer dewpoint i.e. systems with external piping.

Adsorption (desiccant) dryers

Water vapor is water in a gaseous form and is removed from compressed air using a dryer, with dryer performance being measured as pressure dewpoint. Adsorption or desiccant dryers remove moisture by passing air over a regenerative adsorbent material which strips the moisture from the air. This type of dryer is extremely efficient and typical pressure dewpoint ratings are -40°F (-40°C) or -100°F (-70°C) pdp. This means that for water vapor to condense into a liquid, the air temperature would have to drop below -40°F (-40°C) to -100°F (-70°C) respectively (the actual air temperature after an adsorption dryer is not the same as it's dewpoint).

Beneficially, a pressure dewpoint of -15°F (-26°C) or better will not only prevent corrosion, but will also inhibit the growth of microorganisms within the compressed air system.

Important note regarding compressed air dryers

As adsorption and refrigeration dryers are designed to remove only water vapor and not water in a liquid form, they require the use of particulate and coalescing filters, and possibly a bulk liquid separator to work efficiently.

Tel: +45 63 12 83 00 | Email: ps@hymatik.com | www.hymatik.com | Hvidkaervej 27a, DK-5250 Odense SV, Denmark

General purpose oil free air

Bulk contamination is removed to an adequate level prior to the air entering the distribution system.
Point of use particulate filter(s) are used for removal of contamination within the distribution system.
Point of use adsorption dryer installed where lower dewpoints are required.

Typical applications

- Plant automation
- Air logistics
- Pneumatic tools
- General instrumentation
- Air conveying
- Air motors
- Temperature control systems
- Blow guns
- Gauging equipment
- Raw material mixing
- Sand / bead blasting

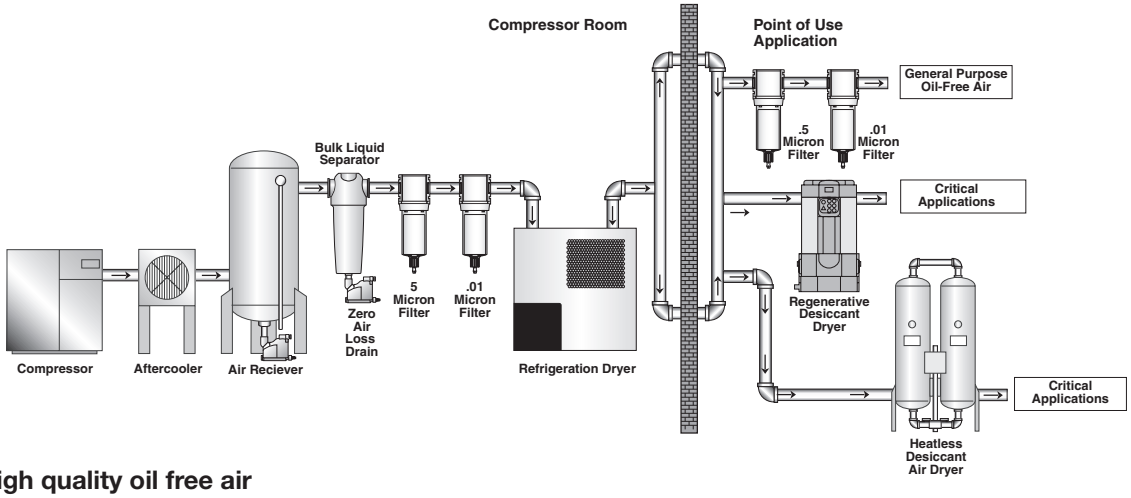

High quality oil free air

Bulk contamination is removed to an adequate level prior to the air entering the distribution system.
Point of use particulate filter(s) are used for removal of contamination within the distribution system.
Adsorption dryers are used for critical applications where lower dewpoints are required.

Typical applications

- Blow molding of plastics e.g. P.E.T. bottles
- Film processing
- Critical instrumentation
- Advanced pneumatics
- Air blast circuit breakers
- Decompression chambers
- Cosmetic production
- Medical air
- Dental air
- Lasers and optics
- Robotics
- Spray painting
- Air bearings
- Pipeline purging
- Measuring equipment

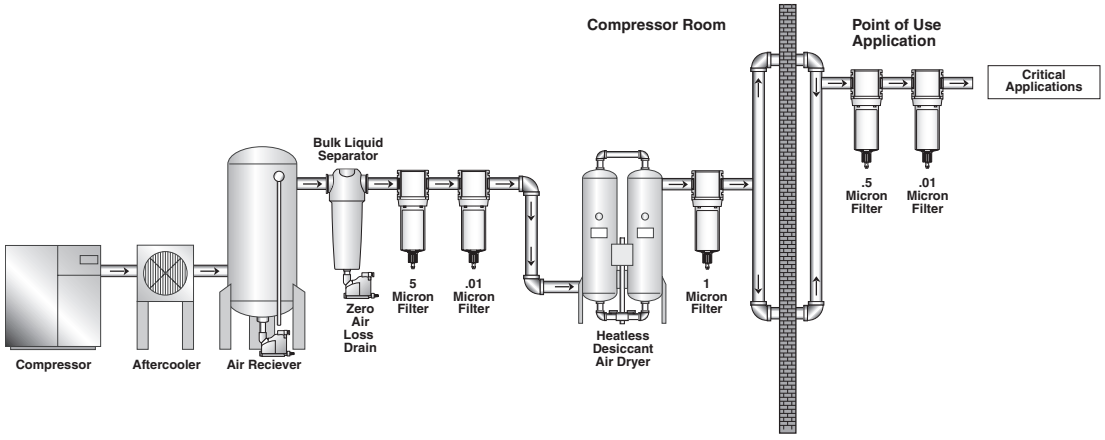

For inventory, lead times, and kit lookup, visit www.pdnplu.com

Parker Hannifin Corporation
Pneumatic Division
Richland, Michigan
www.parker.com/pneumatics

Tel: +45 63 12 83 00 | Email: ps@hymatik.com | www.hymatik.com | Hvidkaervej 27a, DK-5250 Odense SV, Denmark

Parker Hannifin Corporation
Pneumatic Division
Richland, Michigan
www.parker.com/pneumatics

Tel: +45 63 12 83 00 | Email: ps@hymatik.com | www.hymatik.com | Hvidkaervej 27a, DK-5250 Odense SV, Denmark

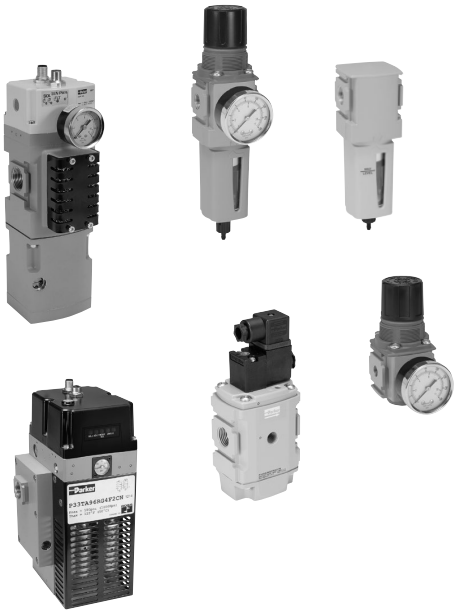

Air Preparation Products
Global Air Preparation Series

Introduction	B2-B7
Particulate Filters	B8-B13
Coalescing Filters	B14-B19
Regulators	B20-B31
Proportional Regulators	B32-B41
Filter / Regulators	B42-B49
Lubricators	B50-B55
Combinations	B56-B59
Dump Valves / Soft Start Valves	B60-B65
Safety Exhaust Valve	B66-B69
Redundant Safety Exhaust Valve	B70-B73
Accessories	B74-B84

Parker Hannifin Corporation
Pneumatic Division
Richland, Michigan
www.parker.com/pneumatics

Tel: +45 63 12 83 00 | Email: ps@hymatik.com | www.hymatik.com | Hvidkaervej 27a, DK-5250 Odense SV, Denmark

RoHS COMPLIANT

DECLARATION OF COMPLIANCE (ROHS)

European Directive 2011/65/EU – RoHS (Restriction us of certain Hazardous Substances in electrical and electronic equipment), restricts the use of the 6 substances in the manufacture of specified electrical equipment.

Lead: Product containing lead and its compound (except for applications of lead as an alloying element by weight in steel up to 0.35%, in aluminium up to 0.4% and in copper alloys up to 4% and in circuit board solder) must not exceed 0.1% by weight

Mercury: The concentration level must not exceed 0.1% by volume

Cadmium: The concentration level must not exceed 0.01% by volume

Hexavalent Chromiou:
This is a corrosive protective finish used on our product line. Where this finish is utilized the Chromate solution is Hexavalent (Chrome 6) free.

Polybrominated Biphenyls (PBB):
The concentration level must not exceed 0.1% by weight. This substance is not know to be in any of our products.

Polybrominated Diphenyl Esters (PBDE):
The concentration level must not exceed 0.1% by weight. This substance is not know to be in any of our products.

CE

Global Air Preparation products supplied by Parker Hannifin have been designed and manufactured in accordance with "sound engineering practice", as defined by Article 3 of Pressure Equipment Directive 97/23/EC.

REACh Compliant

Global Air Preparation product range is in compliance with REACH to ensure continued compliance additions to the list of SVHC (Substance of Very High Concern) are reviewed periodically.

Global Air Preparation product range has been third party Shock & Vibration tested independently in accordance to EN 61373 : 1999, Category 2

Ex ATEX

Following Ignition Hazard Assessments performed on the non-electrical Global Air Preparation products they are in accordance with the requirements of EN 13463-1:2009, it was considered that the equipment does not contain its own source of ignition, and therefore is not within the scope of directive 94/9/EC.

The products can be used in a Group II Category 2 environment assuming that the ATEX Directive and the following conditions are complied with:

- Installation and maintenance of the product must be undertaken by qualified personnel.
- Do not mount the products in an area where impact may occur.
- Filters must be used to limit the introduction of particles and to capture particles generated in service.
- Supply air quality must be within ISO 8573-1:2010 Class 1.4.2.
- Maximum working temperature to be as stated on product label.
- WARNING – pulsating pressure and/or a closed circuit can generate heat.
- Deposits of dust on the product must not exceed 5mm thickness.
  Refer to technical file for surface areas of plastics. The unit must be earthed via the compressed air supply line.
- The unit must not come into contact with liquid solvents, acids or alkalis
  Refer to technical file for chemicals known to be incompatible. Product cleaning must be undertaken using a method complying with the specifications of the ATEX zone, preferably by using mild soap and water or antistatic products.
- Regulators, Filter Regulators:
  Do not use Regulators or Filter Regulators within systems that can create vibration within the Regulator / Filter Regulator unit.
- Solenoid Operated Valves:
  Are suitable for use in an ATEX environment, (Group II Category 2) providing ATEX approved solenoids are fitted.
- Technical file available on request.

ISO

Global Air Preparation product range has been designed and tested in accordance with ISO flow testing, envelope integrity, and catalog data presented.

- Filters – ISO 5782-1 & ISO 5782-2: 1997
- Regulators- ISO 6953-1 & ISO 6953-2: 2000
- Lubricators- ISO 6301-1 & ISO 6301-2: 2009

Tel: +45 63 12 83 00 | Email: ps@hymatik.com | www.hymatik.com | Hvidkaervej 27a, DK-5250 Odense SV, Denmark









Parker Global Air Preparation System

Global.
Modular.



Performance you need,
wherever *you need it.*

Full featured particulate and coalescing filters, regulators, filter/regulators, and lubricators are available with a wide range of standard options to meet air preparation needs.

The comprehensive Global Air Preparation System is available in three body sizes with either BSPP, BSPT, or NPT to accommodate thread type requirements.

Individual units can easily be assembled into various combinations, utilizing patented modular lightweight body connectors.

www.parker.com/globalfrl

Tel: +45 63 12 83 00 | Email: ps@hymatik.com | www.hymatik.com | Hvidkaervej 27a, DK-5250 Odense SV, Denmark

A completely modular air preparation system

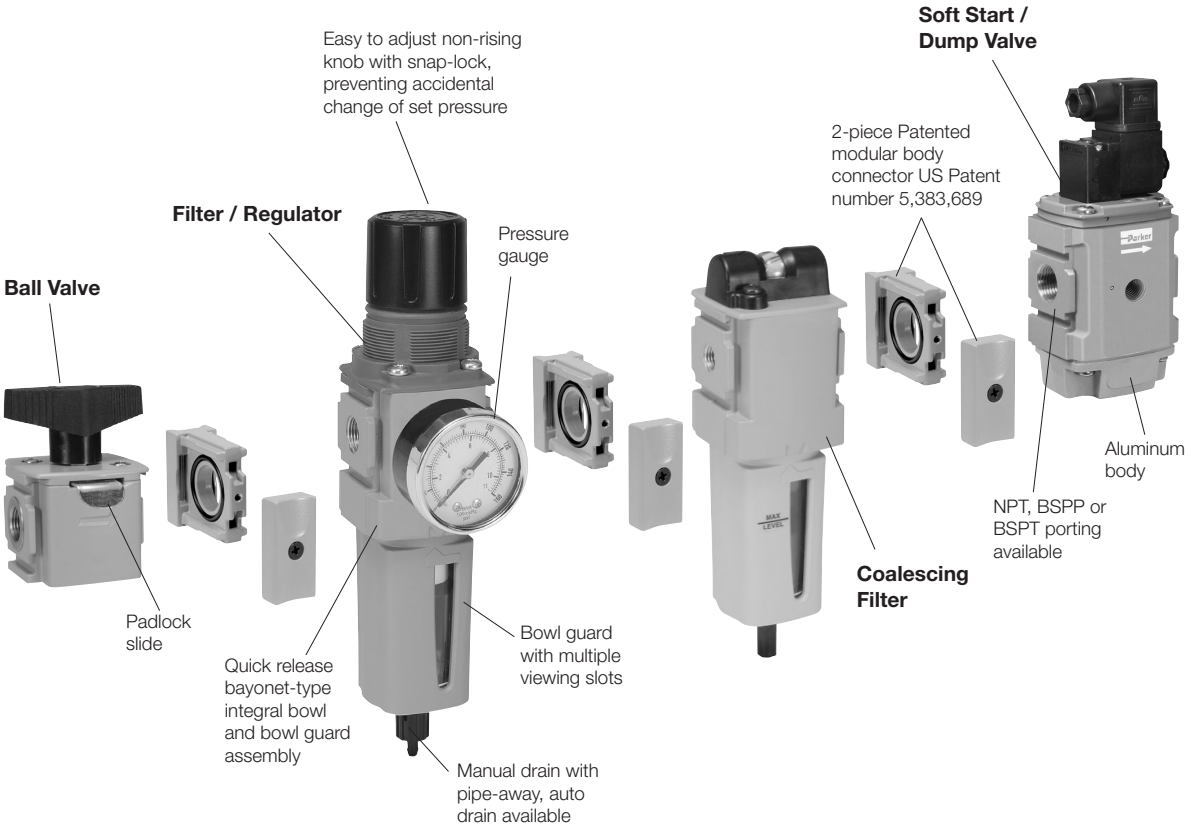

For inventory, lead times, and kit lookup, visit www.pdnplu.com

Parker Hannifin Corporation
Pneumatic Division
Richland, Michigan
www.parker.com/pneumatics

Tel: +45 63 12 83 00 | Email: ps@hymatik.com | www.hymatik.com | Hvidkaervej 27a, DK-5250 Odense SV, Denmark

Comprehensive Offering



P31 Mini Series
1/4" ports
40mm body width



P32 Compact Series
1/4", 3/8" and 1/2"
60mm body width



P33 Standard Series
1/2" and 3/4"
73mm body width



Filters

- 5µ particulate, 1.0µ and 0.01µ coalescing, and adsorber available as standard
- Transparent or metal bowl with manual or auto float drains standard



Regulators

- Available as stand alone, common port and electronic proportional
- Both relieving and non-relieving versions available



Filter / Regulators

- Compact design for space savings
- Available with all the same standard options as the filters and regulators



Lubricators

- Proportional oil delivery over a wide range of air flows
- Fill under pressure



Combinations

- Compact design for space savings
- Easily assembled
- Many configurations available



Accessories

- Solenoid operated soft start, quick dump, and soft start/ quick dump valves
- Manifold blocks
- Ball style lockout / shutoff valve
- Repair kits, gauges, etc.

For inventory, lead times, and kit lookup, visit www.pdnplu.com

Parker Hannifin Corporation
Pneumatic Division
Richland, Michigan
www.parker.com/pneumatics

Tel: +45 63 12 83 00 | Email: ps@hymatik.com | www.hymatik.com | Hvidkaervej 27a, DK-5250 Odense SV, Denmark

Air Preparation

P31 Mini Series

40mm body width

1/4" Ported

Flows up to:	scfm	(dm^3/s, ANR)
Filter	25	(12)
Coalescer	7.5	(3.6)
Regulator	68	(32)
Filter/Regulator	22	(10)
Lubricator	52	(25)

Features:
- Space saving integral gauge
- Manifold style regulators available
- OSHA compliant shut-off valves
- Soft-Start & Quick Dump valves
- Electronic Proportional Regulator

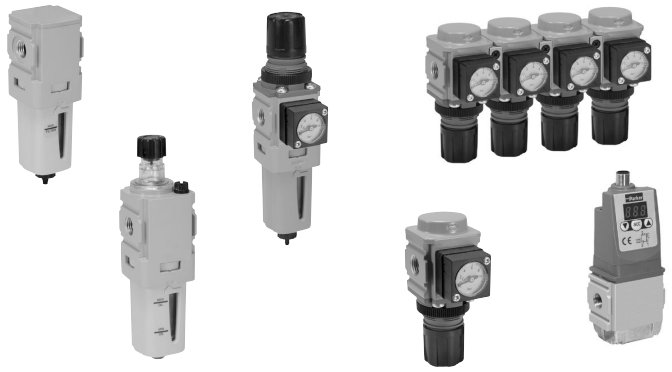

P32 Compact Series

60mm body width

1/4", 3/8", & 1/2" Ported

Flows up to:	scfm	(dm^3/s, ANR)
Filter	82	(39)
Coalescer	36	(17)
Regulator	165	(78)
Filter/Regulator	136	(64)
Lubricator	90	(42)

Features:
- Manifold style regulators available
- OSHA Compliant shut-off valves
- Soft-Start & Quick Dump valves
- Electronic Proportional Regulator



P33 Standard Series

73mm body width

1/2" & 3/4" Ported

Flows up to:	scfm	(dm^3/s, ANR)
Filter	85	(40)
Coalescer	72	(34)
Regulator	233	(111)
Filter/Regulator	230	(108)
Lubricator	150	(71)

Features:
- OSHA Compliant shut-off valves
- Soft-Start & Quick Dump valves (Utilizes P32 size only)
- Electronic proportional regulator (Utilizes P32 size only)



Tel: +45 63 12 83 00 | Email: ps@hymatik.com | www.hymatik.com | Hvidkaervej 27a, DK-5250 Odense SV, Denmark

Complete Pneumatic System

Common Port Manifold Regulators

- Multiple output pressures (P2, P3, P4, etc.) with common inlet (P1)
- Available in two sizes P31 and P32
- Balanced valve design for accurate pressure regulation
- Outlet pressure ports in front and rear of unit.
- Multiple spring ranges available

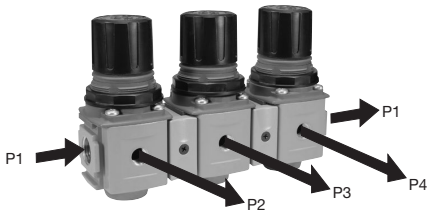

Electronic Proportional Regulator

- Electro-Pneumatic regulator
- Integrated systems control
- Accurate output pressure
- Micro parameter settings
- Selectable I/O parameters
- Quick, full flow exhaust
- LED display indicates output pressure
- No air consumption in steady state
- Multiple mounting options
- Protection to IP65



P31P Mini Series



P32P Compact Series

Semi Precision Regulator and Filter/Regulator

- Available in P32 compact series
- Fine adjustment sensitivity
- Good repeatability and minimal pressure drop
- Good flow capacity
- Light gray knob for easy identification



Optional Tamperproof Kits

- One facilitates the permanent tamperproofing of the Regulator and Filter/Regulator units
- Hinged black part clamps over control knob and is locked in place after sliding yellow cover over it
- Other allows for removable lockout/tagout tamperproofing
  - Four pad lock location holes tagout
  - Hinged locking clamp secures over existing knob via yellow cover which is slid over into place



Additional Options P32 Only (Consult factory for availability)

- T-Handle



- Preset and Tamperproof



- Preset
- Pressure Limiter

For inventory, lead times, and kit lookup, visit www.pdnplu.com

Parker Hannifin Corporation
Pneumatic Division
Richland, Michigan
www.parker.com/pneumatics

Tel: +45 63 12 83 00 | Email: ps@hymatik.com | www.hymatik.com | Hvidkaervej 27a, DK-5250 Odense SV, Denmark

P31 Particulate Filter – Mini

- Integral 1/4" ports (NPT, BSPP & BSPT)
- High efficiency 5 micron element as standard
- Excellent water removal efficiency
- Robust but lightweight aluminum construction
- One hand operation for easy element cartridge removal
- Positive bayonet latch to ensure correct & safe fitting



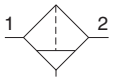

Manual drain

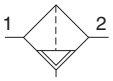

Pulse drain

Port Size	Description ‡	Part Number
1/4"	Poly Bowl, Manual Drain	**P31FB92EGMN**
1/4"	Poly Bowl, Pulse Drain	**P31FB92EGBN**
1/4"	Metal Bowl, Manual Drain	**P31FB92EMMN**
1/4"	Metal Bowl, Pulse Drain	**P31FB92EMBN**

‡ For polycarbonate bowl, see caution in Engineering Section A.

Operating information

Supply pressure (max):	
Plastic bowl	150 psig (10 bar)
Metal bowl	250 psig (17 bar)
Operating temperature:	
Plastic bowl	14°F to 125°F (-10°C to 52°C)
Metal bowl	14°F to 150°F (-10°C to 65.5°C)
Standard filtration:	5 micron
Flow capacity*:	25 scfm (12 dm^3/s, ANR)
Useful retention†:	0.4 US oz. (12 cm^3)
Weight:	0.24 lb (0.11 kg)

* Inlet pressure 91.3 psig (6.3 bar). Pressure drop 4.9 psig (0.34 bar).
† Useful retention refers to volume below the quiet zone baffle.

Air quality:
Within ISO 8573-1: 1991 Class 3 (Particulates)
Within ISO 8573-1: 2001 Class 6 (Particulates)

Ordering information:

P31FB 9 2 E G M N

Basic Series
Global Modular Mini Particulate Filter — P31FB

Thread Type
BSPP 1
BSPT 2
NPT 9

Port Size
1/4 2

Element
5µ Element E

Bowl type
G Poly Bowl with Bowl Guard
M Metal Bowl without Sight Gauge

Drain Type
M Manual Drain
B Pulse Drain
X Flex Drain

Mounting
N No Bracket

☐ Most popular.

Tel: +45 63 12 83 00 | Email: ps@hymatik.com | www.hymatik.com | Hvidkaervej 27a, DK-5250 Odense SV, Denmark

Material Specifications

Body	Aluminum
Body cap	ABS
Plastic bowl	Polycarbonate
Metal bowl	Aluminum
Bowl guard	Nylon
Element retainer	Acetal
Baffle	Acetal
Filter element	Sintered polyethylene
Seals	Nitrile

Repair and Service Kits

Plastic bowl / bowl guard, manual drain	**P31KB00BGM**
Metal bowl / w/o sight gauge, manual drain	**P31KB00BMM**
Plastic bowl / bowl guard, pulse drain	**P31KB00BGB**
Metal bowl / w/o sight gauge, pulse drain	**P31KB00BMB**
5µ particle filter element	**P31KA00ESE**
C-bracket (fits to body)	**P31KA00MW**
T-bracket with body connector	**P31KA00MT**
Body connector	**P31KA00CB**

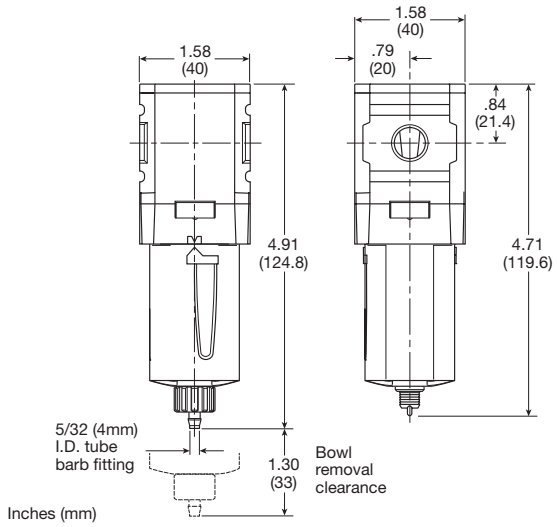

Manual Drain **Pulse Drain**

Flow Charts

P31FB 1/4" Filter

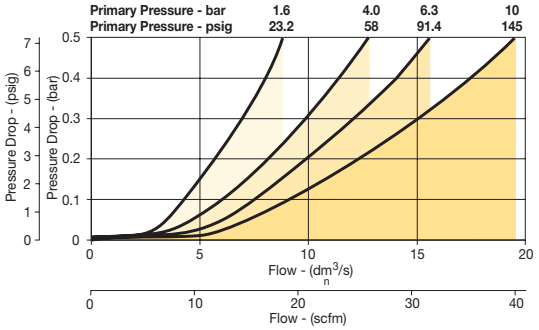

For inventory, lead times, and kit lookup, visit www.pdnplu.com

Parker Hannifin Corporation
Pneumatic Division
Richland, Michigan
www.parker.com/pneumatics

Tel: +45 63 12 83 00 | Email: ps@hymatik.com | www.hymatik.com | Hvidkaervej 27a, DK-5250 Odense SV, Denmark

P32 Particulate Filter – Compact

- Integral 1/4", 3/8" or 1/2" ports (NPT, BSPP & BSPT)
- High efficiency 5 micron element as standard
- Excellent water removal efficiency
- Robust but lightweight aluminum construction
- Positive bayonet latch to ensure correct & safe fitting

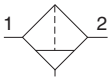

Manual drain

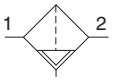

Auto drain



Port Size	Description ‡	Part Number
1/4"	Poly Bowl, Manual Drain	**P32FB92EGMN**
1/4"	Poly Bowl, Auto Drain	**P32FB92EGAN**
1/4"	Metal Bowl, Manual Drain	**P32FB92ESMN**
1/4"	Metal Bowl, Auto Drain	**P32FB92ESAN**
3/8"	Poly Bowl, Manual Drain	**P32FB93EGMN**
3/8"	Poly Bowl, Auto Drain	**P32FB93EGAN**
3/8"	Metal Bowl, Manual Drain	**P32FB93ESMN**
3/8"	Metal Bowl, Auto Drain	**P32FB93ESAN**
1/2"	Poly Bowl, Manual Drain	**P32FB94EGMN**
1/2"	Poly Bowl, Auto Drain	**P32FB94EGAN**
1/2"	Metal Bowl, Manual Drain	**P32FB94ESMN**
1/2"	Metal Bowl, Auto Drain	**P32FB94ESAN**

‡ For polycarbonate bowl, see caution in Engineering Section A.

Operating information

Supply pressure (max):		
Plastic bowl		150 psig (10 bar)
Metal bowl		250 psig (17 bar)
Operating temperature:		
Plastic bowl		-13°F to 125°F (-25°C to 52°C)
Metal bowl		-13°F to 150°F (-25°C to 65.5°C)
Standard filtration:		5 micron
Flow capacity*:	1/4	50 scfm (24 dm^3/s, ANR)
	3/8	78 scfm (37 dm^3/s, ANR)
	1/2	82 scfm (39 dm^3/s, ANR)
Useful retention†:		1.7 US oz. (51 cm^3)
Weight:		0.62 lb (0.28 kg)

* Inlet pressure 91.3 psig (6.3 bar). Pressure drop 4.9 psig (0.34 bar).
† Useful retention refers to volume below the quiet zone baffle.

Air quality:
Within ISO 8573-1: 1991 Class 3 (Particulates)
Within ISO 8573-1: 2001 Class 6 (Particulates)

Ordering Information:

P32FB 9 2 E G M N

Basic Series	
Global Modular Compact Particulate Filter	P32FB

Thread Type	
BSPP	1
BSPT	2
NPT	9

Port Size	
1/4	2
3/8	3
1/2	4

Element	
5µ Element	E

Bowl Type	
G	Poly Bowl with Bowl Guard
M	Metal Bowl without Sight Gauge
S	Metal Bowl with Sight Gauge

Drain Type	
M	Manual Drain
A	Auto Drain
X	Flex Drain

Mounting	
N	No Bracket

☐ Most popular.

Tel: +45 63 12 83 00 | Email: ps@hymatik.com | www.hymatik.com | Hvidkaervej 27a, DK-5250 Odense SV, Denmark

Material Specifications

Body	Aluminum
Body cap	ABS
Plastic bowl	Polycarbonate
Metal bowl	Aluminum
Bowl guard	Nylon
Deflector	Polypropylene
Element retainer / Baffle	Acetal
Filter element	Sintered polyethylene
Seals	Nitrile
Sight gauge	Nylon

Repair and Service Kits

Plastic bowl / bowl guard, manual drain	**P32KB00BGM**
Metal bowl / sight gauge, manual drain	**P32KB00BSM**
Auto drain	**P32KA00DA**
5µ particle filter element	**P32KA00ESE**
L-bracket (fits to body)	**P32KA00ML**
T-bracket (fits to body connector)	**P32KA00MB**
T-bracket with body connector	**P32KA00MT**
Body connector	**P32KA00CB**

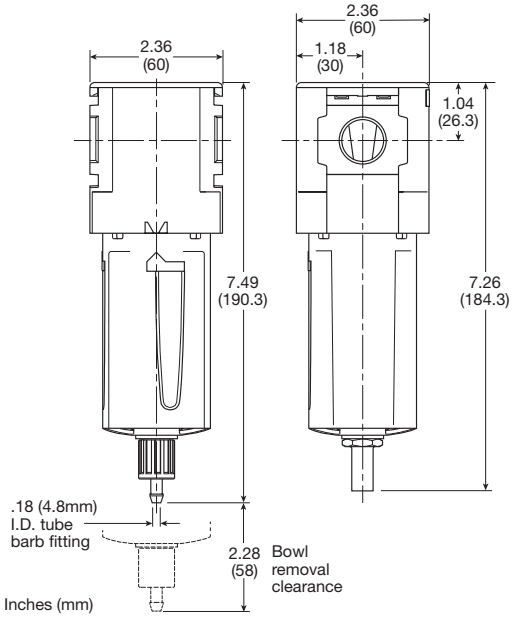

Manual Drain **Automatic Drain**

Flow Charts

P32FB 1/4" Filter

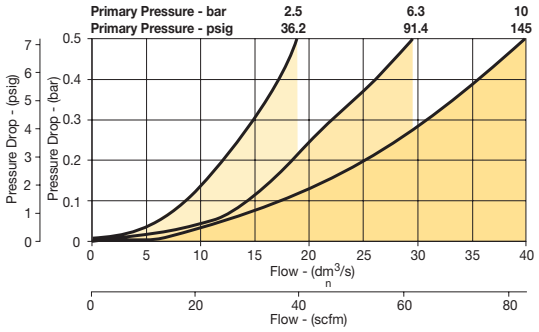

P32FB 3/8" Filter

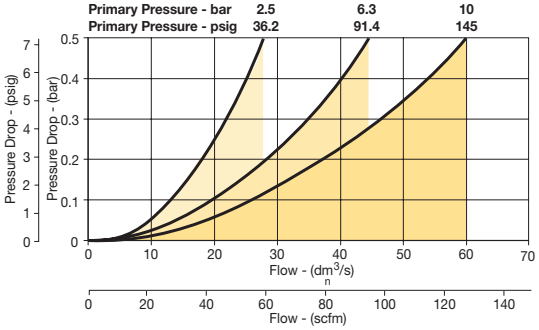

P32FB 1/2" Filter

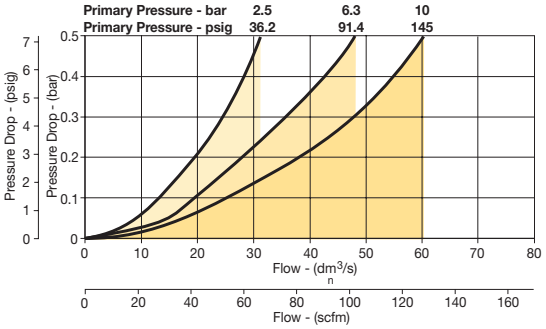

For inventory, lead times, and kit lookup, visit www.pdnplu.com

Parker Hannifin Corporation
Pneumatic Division
Richland, Michigan
www.parker.com/pneumatics

P33 Particulate Filter – Standard

- Integral 1/2" or 3/4" ports (NPT, BSPP & BSPT)
- High efficiency 5 micron element as standard
- Excellent water removal efficiency
- Robust but lightweight aluminum construction
- Positive bayonet latch to ensure correct & safe fitting

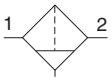

Manual drain



Auto drain



Port Size	Description ‡	Part Number
1/2"	Poly Bowl, Manual Drain	**P33FA94EGMN**
1/2"	Poly Bowl, Auto Drain	**P33FA94EGAN**
1/2"	Metal Bowl, Manual Drain	**P33FA94ESMN**
1/2"	Metal Bowl, Auto Drain	**P33FA94ESAN**
3/4"	Poly Bowl, Manual Drain	**P33FA96EGMN**
3/4"	Poly Bowl, Auto Drain	**P33FA96EGAN**
3/4"	Metal Bowl, Manual Drain	**P33FA96ESMN**
3/4"	Metal Bowl, Auto Drain	**P33FA96ESAN**

‡ For polycarbonate bowl, see caution in Engineering Section A.

Operating information

Supply pressure (max):		
Plastic bowl		150 psig (10 bar)
Metal bowl		250 psig (17 bar)
Operating temperature:		
Plastic bowl		-13°F to 125°F (-25°C to 52°C)
Metal bowl		-13°F to 150°F (-25°C to 65.5°C)
Standard filtration:		5 micron
Flow capacity*:	1/2	85 scfm (40 dm³/s, ANR)
	3/4	102 scfm (48 dm³/s, ANR)
Useful retention†:		2.8 US oz. (85 cm³)
Weight:		1.01 lb (0.46 kg)

* Inlet pressure 91.3 psig (6.3 bar). Pressure drop 4.9 psig (0.34 bar).
† Useful retention refers to volume below the quiet zone baffle.

Air quality:
Within ISO 8573-1: 1991 Class 3 (Particulates)
Within ISO 8573-1: 2001 Class 6 (Particulates)

Ordering Information:

P33FA 9 6 E G M N

Basic Series
Global Modular Standard Particulate Filter — P33FA

Thread Type
BSPP 1
BSPT 2
NPT 9

Port Size
1/2 4
3/4 6

Element
5µ Element E

Bowl Type
G Poly Bowl with Bowl Guard
M Metal Bowl without Sight Gauge
S Metal Bowl with Sight Gauge

Drain Type
M Manual Drain
A Auto Drain

Mounting
N No Bracket

☐ Most popular.

For inventory, lead times, and kit lookup, visit www.pdnplu.com

Parker Hannifin Corporation
Pneumatic Division
Richland, Michigan
www.parker.com/pneumatics

Tel: +45 63 12 83 00 | Email: ps@hymatik.com | www.hymatik.com | Hvidkaervej 27a, DK-5250 Odense SV, Denmark

Material Specifications

Body	Aluminum
Body cap	ABS
Plastic bowl	Polycarbonate
Metal bowl	Aluminum
Bowl guard	Nylon
Deflector	Polypropylene
Element retainer / Baffle	Acetal
Filter element	Sintered polyethylene
Seals	Nitrile
Sight gauge	Nylon

Repair and Service Kits

Plastic bowl / bowl guard, manual drain	**P33KA00BGM**
Metal bowl / sight gauge, manual drain	**P33KA00BSM**
Auto drain	**P32KA00DA**
5µ particle filter element	**P33KA00ESE**
L-bracket (fits to body)	**P33KA00ML**
T-bracket (fits to body connector)	**P32KA00MB**
T-bracket with body connector	**P33KA00MT**
Body connector	**P32KA00CB**

Flow Charts

P33FA 1/2" Filter

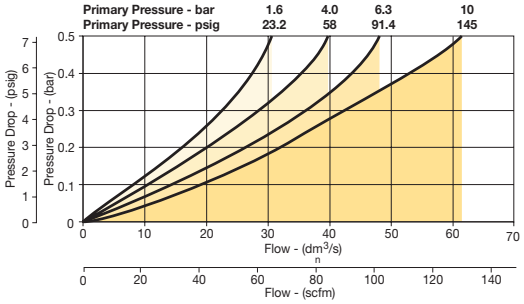

P33FA 3/4" Filter

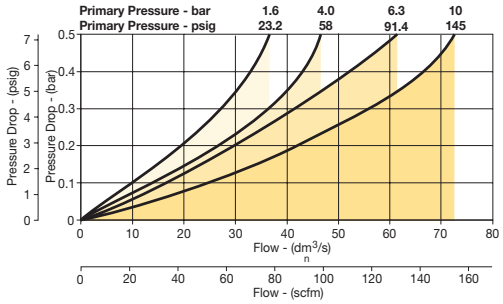

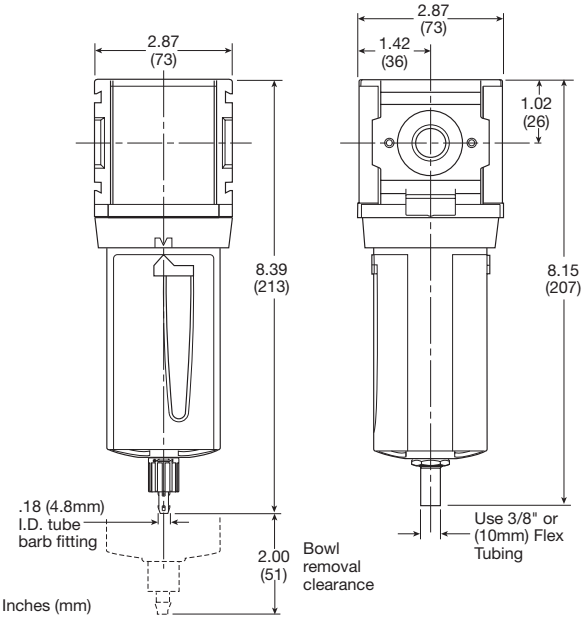

Manual Drain **Automatic Drain**

For inventory, lead times, and kit lookup, visit www.pdnplu.com

Parker Hannifin Corporation
Pneumatic Division
Richland, Michigan
www.parker.com/pneumatics

Tel: +45 63 12 83 00 | Email: ps@hymatik.com | www.hymatik.com | Hvidkaervej 27a, DK-5250 Odense SV, Denmark

P31 Coalescing and Adsorber Filters – Mini

- Integral 1/4" ports (NPT, BSPP & BSPT)
- Removes liquid aerosols and sub micron particles
- Oil free air for critical applications, such as air gauging, pneumatic instrumentation and control
- Differential Pressure Indicator (DPI) standard on coalescing filters
- Positive bayonet latch to ensure correct and safe fitting
- Adsorbing activated carbon element removes oil vapors and most hydrocarbons



Note: To optimize the life of coalescing element, it is advisable to install a P31F pre-filter with a 5 micron element upstream of the coalescing filter.

To optimize the life of an Adsorber it is advisable to install a P31 Coalescing Filter upstream of the Adsorber. Adsorber element should be replaced approximately every 1000 hours of service.

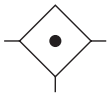

Port Size	Description ‡	Element	Part Number
1/4"	Poly Bowl, Manual Drain	0.01 micron	**P31FB92DGMN**
1/4'	Poly Bowl, Pulse Drain	0.01 micron	**P31FB92DGBN**
1/4"	Metal Bowl, Manual Drain	0.01 micron	**P31FB92DMMN**
1/4'	Metal Bowl, Pulse Drain	0.01 micron	**P31FB92DMBN**

‡ For polycarbonate bowl, see caution in Engineering Section A.

Operating information

Supply pressure (max):	
Poly bowl	150 psig (10 bar)
Metal bowl w/ DPI	150 psig (10 bar)
Metal bowl w/o DPI	250 psig (17 bar)
Operating temperature:	
Plastic bowl	14°F to 125°F (-10°C to 52°C)
Metal bowl	14°F to 150°F (-10°C to 65.5°C)
Standard filtration:	1.0 and 0.01 micron
Adsorber	Max. oil carryover (ppm w/w) 0.003 @ 70°F (21°C)
Flow capacity*:	
1.0 micron coalescing	12 scfm (5.5 dm^3/s, ANR)
0.01 micron coalescing	7.5 scfm (3.6 dm^3/s, ANR)
Activated carbon adsorber	12.7 scfm (6 dm^3/s, ANR)
Useful retention†:	0.4 US oz. (12 cm^3)
Weight:	0.24 lb (0.11 kg)

* Inlet pressure 91.3 psig (6.3 bar). Pressure drop 3 psig (0.2 bar), saturated element.
† Useful retention refers to volume below the quiet zone baffle.

Ordering Information:

P31FB 9 2 D G M N

Basic Series
Global Modular Mini Coalescing Filter — P31FB

Thread Type
BSPP 1
BSPT 2
NPT 9

Port Size
1/4 2

Element
0.01µ Element C
0.01µ Element with DPI D
1µ Element 9
1µ Element with DPI Q
Adsorber A

Bowl Type
G Poly Bowl with Bowl Guard
M Metal Bowl without Sight Gauge

Drain Type
B Pulse Drain
M Manual Drain
X Flex Drain

Mounting
N No Bracket

☐ Most popular.

For inventory, lead times, and kit lookup, visit www.pdnplu.com

Parker Hannifin Corporation
Pneumatic Division
Richland, Michigan
www.parker.com/pneumatics

Tel: +45 63 12 83 00 | Email: ps@hymatik.com | www.hymatik.com | Hvidkaervej 27a, DK-5250 Odense SV, Denmark

Material Specifications

Body	Aluminum
Body cap	ABS
Plastic bowl	Polycarbonate
Metal bowl	Aluminum
Filter element	Borosilicate cloth
Adsorber element	Activated carbon
Seals	Nitrile

Repair and Service Kits

Plastic bowl / bowl guard, manual drain	**P31KB00BGM**
Metal bowl / w/o sight gauge ,manual drain	**P31KB00BMM**
Plastic bowl / bowl guard, pulse drain	**P31KB00BGB**
Metal bowl / w/o sight gauge, pulse drain	**P31KB00BMB**
1µ coalescing filter element	**P31KA00ES9**
0.01µ coalescing filter element	**P31KA00ESC**
Activated carbon adsorber filter element	**P31KA00ESA**
C-bracket (fits to body)	**P31KA00MW**
T-bracket with body connector	**P31KA00MT**
Body connector	**P31KA00CB**
Differential pressure indicator (replacement)	**P31KB00RQ**

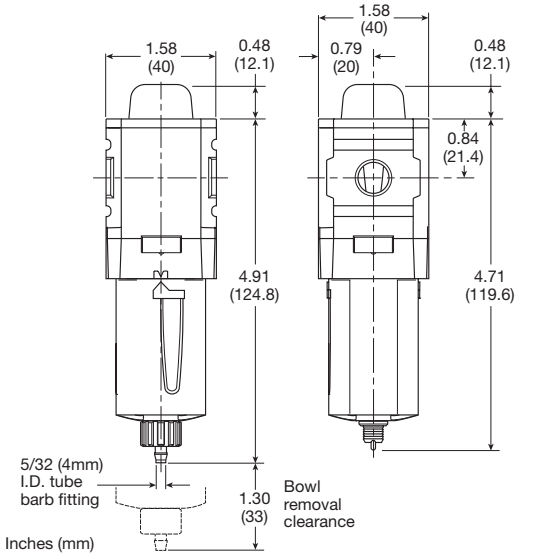

Manual Drain **Pulse Drain**

Flow Charts

P31FB - 1.0 micron flow

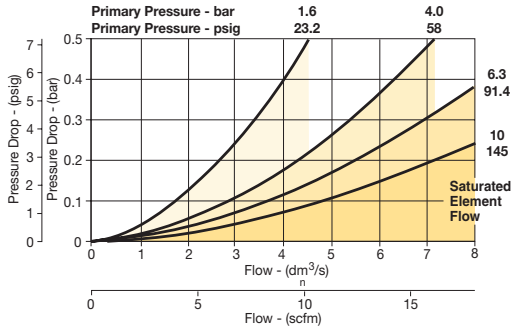

P31FB - 0.01 micron flow

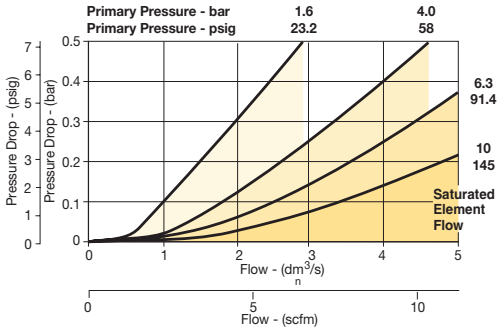

For inventory, lead times, and kit lookup, visit www.pdnplu.com

Parker Hannifin Corporation
Pneumatic Division
Richland, Michigan
www.parker.com/pneumatics

P32 Coalescing and Adsorber Filters – Compact

- Integral 1/4", 3/8" or 1/2" ports (NPT, BSPP & BSPT)
- Removes liquid aerosols and sub micron particles
- Oil free air for critical applications, such as air gauging, pneumatic instrumentation and control
- Differential Pressure Indicator (DPI) standard on Coalescing Filters
- Positive bayonet latch to ensure correct & safe fitting
- Adsorbing activated carbon element removes oil vapors and most hydrocarbons

Note: To optimize the life of coalescing element, it is advisable to install a P32F pre-filter with a 5 micron element upstream of the coalescing filter. To optimize the life of an Adsorber it is advisable to install a P32 Coalescing Filter upstream of the Adsorber. Adsorber element should be replaced approximately every 1000 hours of service.





Port Size	Description ‡	Element	Part Number
1/4"	Poly Bowl, Manual Drain	0.01 micron	**P32FB92DGMN**
1/4"	Poly Bowl, Auto Drain	0.01 micron	**P32FB92DGAN**
1/4"	Metal Bowl, Manual Drain	0.01 micron	**P32FB92DSMN**
1/4"	Metal Bowl, Auto Drain	0.01 micron	**P32FB92DSAN**
3/8"	Poly Bowl, Manual Drain	0.01 micron	**P32FB93DGMN**
3/8"	Poly Bowl, Auto Drain	0.01 micron	**P32FB93DGAN**
3/8"	Metal Bowl, Manual Drain	0.01 micron	**P32FB93DSMN**
3/8'	Metal Bowl, Auto Drain	0.01 micron	**P32FB93DSAN**
1/2"	Poly Bowl, Manual Drain	0.01 micron	**P32FB94DGMN**
1/2"	Poly Bowl, Auto Drain	0.01 micron	**P32FB94DGAN**
1/2"	Metal Bowl, Manual Drain	0.01 micron	**P32FB94DSMN**
1/2"	Metal Bowl, Auto Drain	0.01 micron	**P32FB94DSAN**

‡ For polycarbonate bowl, see caution in Engineering Section A.

Operating information

Supply pressure (max):	
Poly bowl	150 psig (10 bar)
Metal bowl w/ DPI	150 psig (10 bar)
Metal bowl w/o DPI	250 psig (17 bar)
Operating temperature:	
Plastic bowl	-13°F to 125°F (-25°C to 52°C)
Metal bowl	-13°F to 150°F (-25°C to 65.5°C)
Standard filtration:	1.0 and 0.01 micron
Adsorber	Max. oil carryover (ppm w/w) 0.003 @ 70°F (21°C)
Flow capacity*:	
1.0 micron coalescing	53 scfm (25 dm^3/s, ANR)
0.01 micron coalescing	36 scfm (17 dm^3/s, ANR)
Activated carbon adsorber	85 scfm (40 dm^3/s, ANR)
Useful retention†:	1.7 US oz. (51 cm^3)
Weight:	0.71 lb (0.32 kg)

* Inlet pressure 91.3 psig (6.3 bar). Pressure drop 3 psig (0.2 bar), saturated element.
† Useful retention refers to volume below the quiet zone baffle.

Ordering Information:

P32FB 9 2 D G M N

Basic Series
Global Modular Compact Coalescing Filter — P32FB

Thread Type

BSPP	1
BSPT	2
NPT	9

Port Size

1/4	2
3/8	3
1/2	4

Element

0.01µ Element	C
0.01µ Element with DPI	D
1µ Element	9
1µ Element with DPI	Q
Adsorber	A

Bowl Type

G	Poly Bowl with Bowl Guard
M	Metal Bowl without Sight Gauge
S	Metal Bowl with Sight Gauge

Drain Type

M	Manual Drain
A	Auto Drain
X	Flex Drain

Mounting

N	No Bracket

☐ Most popular.

For inventory, lead times, and kit lookup, visit www.pdnplu.com

Parker Hannifin Corporation
Pneumatic Division
Richland, Michigan
www.parker.com/pneumatics

Tel: +45 63 12 83 00 | Email: ps@hymatik.com | www.hymatik.com | Hvidkaervej 27a, DK-5250 Odense SV, Denmark

Material Specifications

Body	Aluminum
Body cap	ABS
Plastic bowl	Polycarbonate
Metal bowl	Aluminum
Filter element	Borosilicate cloth
Adsorber	Activated carbon
Seals	Nitrile
Sight gauge	Nylon

Repair and Service Kits

Plastic bowl / bowl guard, manual drain	**P32KB00BGM**
Metal bowl / sight gauge, manual drain	**P32KB00BSM**
Auto drain	**P32KA00DA**
1µ coalescing filter element	**P32KA00ES9**
0.01µ coalescing filter element	**P32KA00ESC**
Activated carbon adsorber filter element	**P32KA00ESA**
L-bracket (fits to body)	**P32KA00ML**
T-bracket (fits to body connector)	**P32KA00MB**
T-bracket with body connector	**P32KA00MT**
Body connector	**P32KA00CB**
Differential pressure indicator (replacement)	**P32KA00RQ**

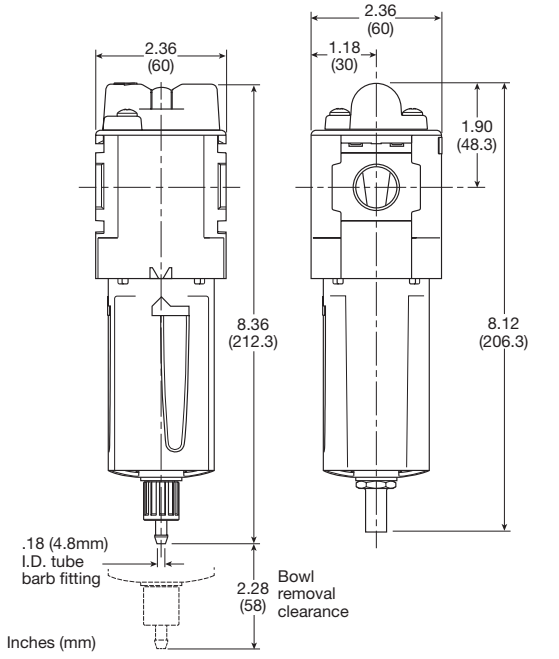

Manual Drain **Automatic Drain**

Flow Charts

P32FB - 1.0 micron flow

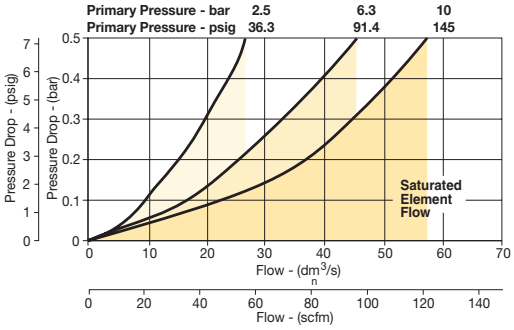

P32FB - 0.01 micron flow

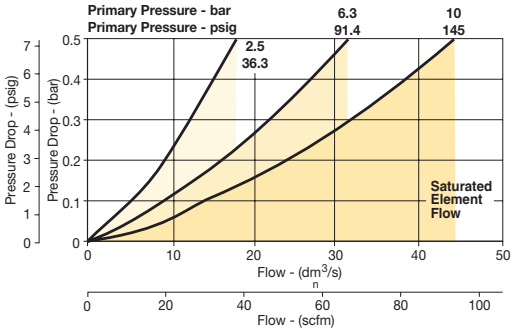

For inventory, lead times, and kit lookup, visit www.pdnplu.com

Parker Hannifin Corporation
Pneumatic Division
Richland, Michigan
www.parker.com/pneumatics

Tel: +45 63 12 83 00 | Email: ps@hymatik.com | www.hymatik.com | Hvidkaervej 27a, DK-5250 Odense SV, Denmark

P33 Coalescing and Adsorber Filters – Standard

- Integral 1/2" or 3/4" ports (NPT, BSPP & BSPT)
- Removes liquid aerosols and sub micron particles
- Oil free air for critical applications, such as air gauging, pneumatic instrumentation and control
- Differential Pressure Indicator (DPI) standard on Coalescing Filters
- Positive bayonet latch to ensure correct & safe fitting
- Adsorbing activated carbon element removes oil vapors and most hydrocarbons

Note: To optimize the life of coalescing element, it is advisable to install a P33F pre-filter with a 5 micron element upstream of the coalescing filter.

To optimize the life of an Adsorber it is advisable to install a P33 Coalescing Filter upstream of the Adsorber. Adsorber element should be replaced approximately every 1000 hours of service.

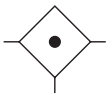

Port Size	Description ‡	Element	Part Number
1/2"	Poly Bowl, Manual Drain	0.01 micron	**P33FA94DGMN**
1/2"	Poly Bowl, Auto Drain	0.01 micron	**P33FA94DGAN**
1/2"	Metal Bowl, Manual Drain	0.01 micron	**P33FA94DSMN**
1/2"	Metal Bowl, Auto Drain	0.01 micron	**P33FA94DSAN**
3/4"	Poly Bowl, Manual Drain	0.01 micron	**P33FA96DGMN**
3/4"	Poly Bowl, Auto Drain	0.01 micron	**P33FA96DGAN**
3/4"	Metal Bowl, Manual Drain	0.01 micron	**P33FA96DSMN**
3/4"	Metal Bowl, Auto Drain	0.01 micron	**P33FA96DSAN**

‡ For polycarbonate bowl, see caution in Engineering Section A.



Operating information

Supply pressure (max):	
Poly bowl	150 psig (10 bar)
Metal bowl w/ DPI	150 psig (10 bar)
Metal bowl w/o DPI	250 psig (17 bar)
Operating temperature:	
Plastic bowl	-13°F to 125°F (-25°C to 52°C)
Metal bowl	-13°F to 150°F (-25°C to 65.6°C)
Standard filtration:	1.0 and 0.01 micron
Adsorber	Max. oil carryover (ppm w/w) 0.003 @ 70°F (21°C)
Flow capacity*:	
1.0 micron coalescing	68 scfm (32 dm^3/s, ANR)
0.01 micron coalescing	42 scfm (20 dm^3/s, ANR)
Activated carbon adsorber	72 scfm (34 dm^3/s, ANR)
Useful retention†:	2.8 US oz. (85 cm^3)
Weight:	1.10 lb (0.50 kg)

* Inlet pressure 91.3 psig (6.3 bar). Pressure drop 3 psig (0.2 bar), saturated element.
† Useful retention refers to volume below the quiet zone baffle.

Ordering information:

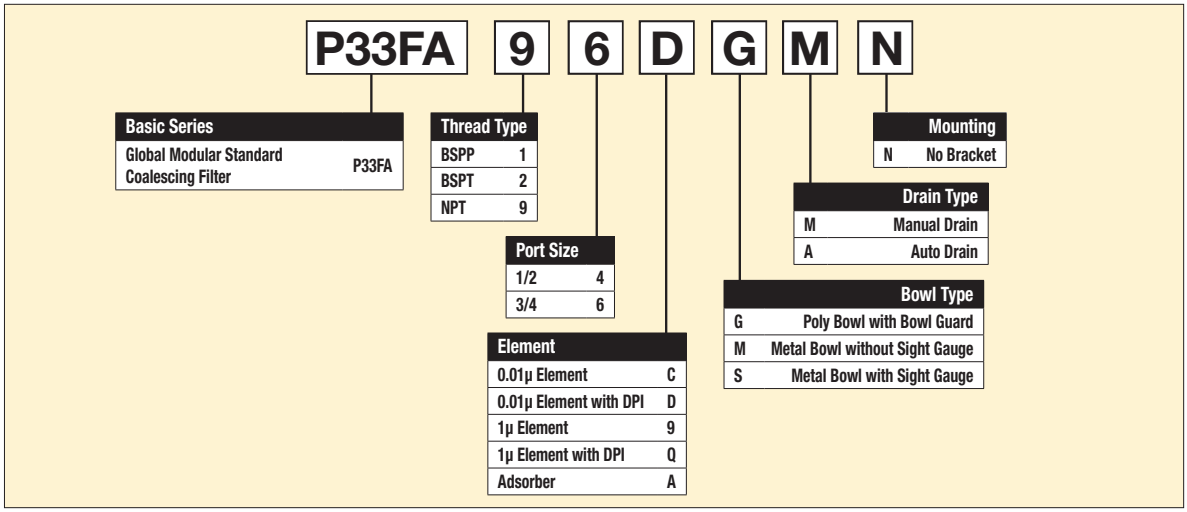

☐ Most popular.

For inventory, lead times, and kit lookup, visit www.pdnplu.com

Parker Hannifin Corporation
Pneumatic Division
Richland, Michigan
www.parker.com/pneumatics

Tel: +45 63 12 83 00 | Email: ps@hymatik.com | www.hymatik.com | Hvidkaervej 27a, DK-5250 Odense SV, Denmark

Material Specifications

Body	Aluminum
Body cap	ABS
Plastic bowl	Polycarbonate
Metal bowl	Aluminum
Filter element	Borosilicate cloth
Adsorber	Activated carbon
Seals	Nitrile
Sight gauge	Nylon

Repair and Service Kits

Plastic bowl / bowl guard, manual drain	**P33KA00BGM**
Metal bowl / sight gauge, manual drain	**P33KA00BSM**
Auto drain	**P32KA00DA**
1µ coalescing filter element	**P33KA00ES9**
0.01µ coalescing filter element	**P33KA00ESC**
Activated carbon adsorber filter element	**P33KA00ESA**
L-bracket (fits to body)	**P33KA00ML**
T-bracket (fits to body connector)	**P32KA00MB**
T-bracket with body connector	**P32KA00MT**
Body connector	**P32KA00CB**
Differential pressure indicator (replacement)	**P32KA00RQ**

Flow Charts

P33FA - 1.0 micron flow

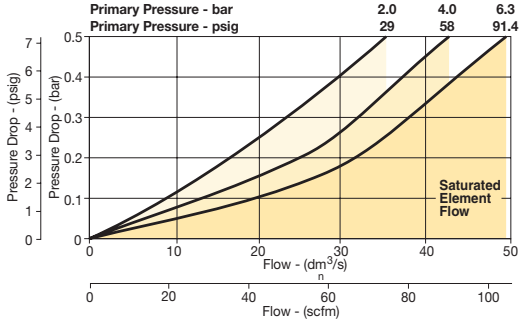

P33FA - 0.01 micron flow

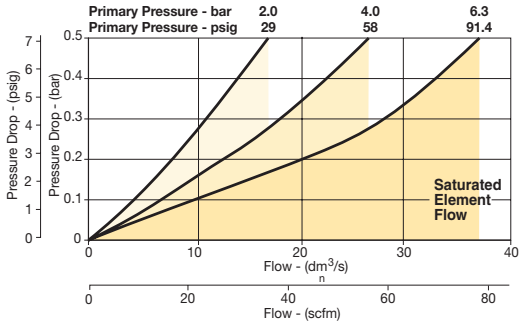

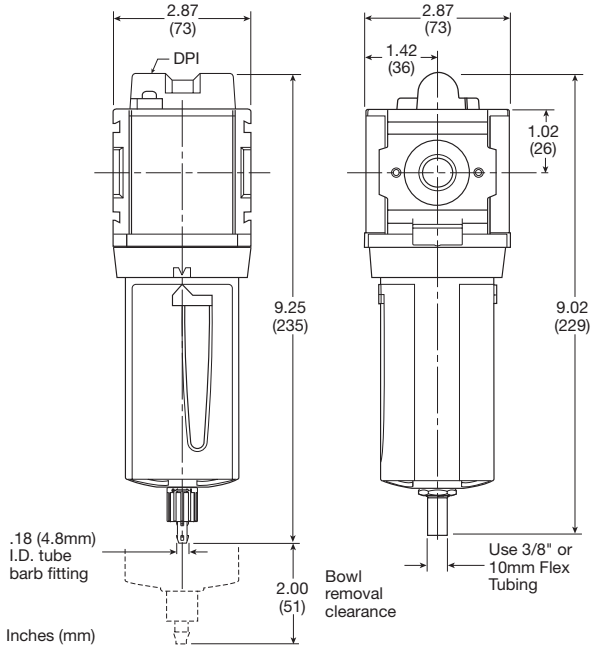

Manual Drain **Automatic Drain**

For inventory, lead times, and kit lookup, visit www.pdnplu.com

Parker Hannifin Corporation
Pneumatic Division
Richland, Michigan
www.parker.com/pneumatics

Tel: +45 63 12 83 00 | Email: ps@hymatik.com | www.hymatik.com | Hvidkaervej 27a, DK-5250 Odense SV, Denmark

P31 Regulators – Mini

- Integral 1/4" ports (NPT, BSPP & BSPT)
- Robust but lightweight aluminum construction
- Secondary pressure ranges
- Secondary aspiration plus balanced poppet provides quick response and accurate pressure regulation.
- Relieving & non-relieving types
- Non-rising knob



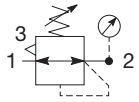

Self relieving regulator with gauge

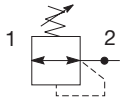

Non-relieving regulator

Port Size	Description (Relieving)	Gauge	Part Number
1/4"	125 psig (8 bar)	None	**P31RB92BNNP**
1/4"	125 psig (8 bar)	Square	**P31RB92BN5P**

Operating information

Flow capacity*: 1/4	68 scfm (32 dm^3/s, ANR)
Operating temperature†:	-4°F to 150°F (-20°C to 65.5°C)
Supply pressure (max):	300 psig (20 bar)
Adjusting range pressure:	30 psig (0-2 bar) 60 psig (0-4 bar) 125 psig (0-8 bar) 232 psig (0-16 bar)
Gauge port (2 each)**	1/8 BSPP, BSPT, NPT
Weight:	0.37 lb (0.17 kg)

* Inlet pressure 145 psig (10 bar). Secondary pressure 91.3 psig (6.3 bar) and 14.5 psig (1 bar) pressure drop.
** Non-gauge option only.
† Units with square gauges: 5°F to 150°F (-15°C to 65.5°C)

Ordering Information:

P31RB 9 2 B N 5 P

Basic Series

Global Modular Mini Regulator	P31RB

Thread Type

BSPP	1
BSPT	2
NPT	9

Port Size

1/4	2

Relief

Relieving	B
Non-Relieving	N
Reverse Flow-Relieving	R

Adjustment

N	Non-Rising Knob

Mounting

P	Plastic Panel Mount Nut

Adjustment Range

With Square Gauge		With Round Gauge	
psig	Bar		
1 = 30*	V = 2*	Z	30 psig; 2 Bar; 0.2 MPa
3 = 60	S = 4	M	60 psig; 4 Bar; 0.4 MPa
5 = 125	T = 8	G	125 psig; 8 Bar; 0.8 MPa
		J	232 psig; 16 Bar; 1.6 MPa
		Without Gauge	
		Y	30 psig; 2 Bar; 0.2 MPa
		L	60 psig; 4 Bar; 0.4 MPa
		N	125 psig; 8 Bar; 0.8 MPa
		H	232 psig; 16 Bar; 1.6 MPa

* Regulator comes with gauge respective to the adjustment range selected.

☐ Most popular.

Tel: +45 63 12 83 00 | Email: ps@hymatik.com | www.hymatik.com | Hvidkaervej 27a, DK-5250 Odense SV, Denmark

Material Specifications

Body	Aluminum
Adjustment knob	Acetal
Bonnet	PBT
Diaphragm assembly	Brass / Nitrile
Valve assembly	Brass / Nitrile
Springs	Steel
Seals	Nitrile
Panel nut	Acetal

Repair and Service Kits

Diaphragm repair kit - relieving	**P31KB00RB**
Diaphragm repair kit - non-relieving	**P31KB00RC**
Panel mount nut - aluminum	**P31KA00MM**
Panel mount nut - plastic	**P31KA00MP**
Angle bracket (attaches via panel nut)	**P31KB00MR**
C-bracket (fits to body)	**P31KA00MW**
T-bracket with body connector	**P31KA00MT**
Body connector	**P31KA00CB**

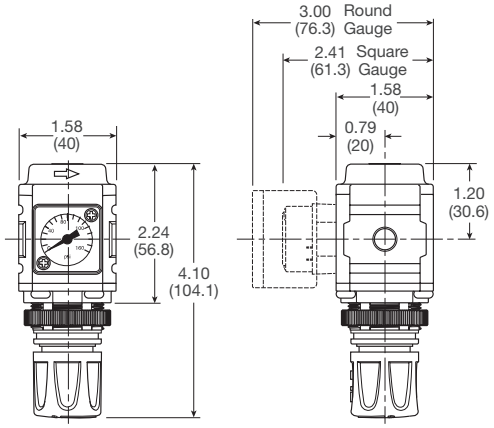

Inches (mm)

NOTE: 1.20 in. (30mm) hole required for panel nut mounting.

Flow Charts

P31RB 1/4" Regulator

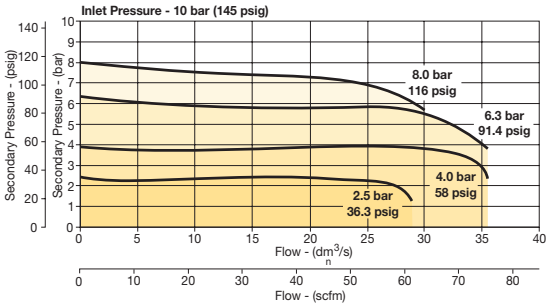

⚠ WARNING

Product rupture can cause serious injury.
Do not connect regulator to bottled gas.
Do not exceed Maximum primary pressure rating.

CAUTION:

REGULATOR PRESSURE ADJUSTMENT – The working range of knob adjustment is designed to permit outlet pressures within their full range. Pressure adjustment beyond this range is also possible because the knob is not a limiting device. This is a common characteristic of most industrial regulators, and limiting devices may be obtained only by special design. For best performance, regulated pressure should always be set by increasing the pressure up to the desired setting.

Gauges

Square flush mount gauge	0-4 bar	**K4511SCR04B**
	0-11 bar	**K4511SCR11B**
	0-60 psig	**K4511SCR060**
	0-160 psig	**K4511SCR160**
Square with adapter kit	0-4 bar	**P6G-PR10040**
	0-11 bar	**P6G-PR10110**
	0-60 psig	**P6G-PR90060**
	0-160 psig	**P6G-PR90160**
1.00" Round 1/8" center back mount	0-60 psig / 0-4 bar	**K4510N18060**
	0-160 psig / 0-11 bar	**K4510N18160**
40mm Round 1/8" center back mount (Not for use with common port regulators)	0-30 psig / 0-2 bar	**K4515N18030**
	0-60 psig / 0-4 bar	**K4515N18060**
	0-160 psig / 0-11 bar	**K4515N18160**

For best performance, regulated pressure should always be set by increasing the pressure up to the desired setting.

For inventory, lead times, and kit lookup, visit www.pdnplu.com

Parker Hannifin Corporation
Pneumatic Division
Richland, Michigan
www.parker.com/pneumatics

P31 Common P1 Regulators – Mini

- Manifold style regulator with line pressure on both sides
- Pressure output is at front or rear
- Inlet port 1/4" (NPT, BSPP & BSPT)
- Working port 1/8"
- Robust construction
- Secondary pressure ranges
- Secondary aspiration plus balanced poppet provides quick response and accurate pressure regulation
- Relieving & non-relieving types
- Non-rising knob

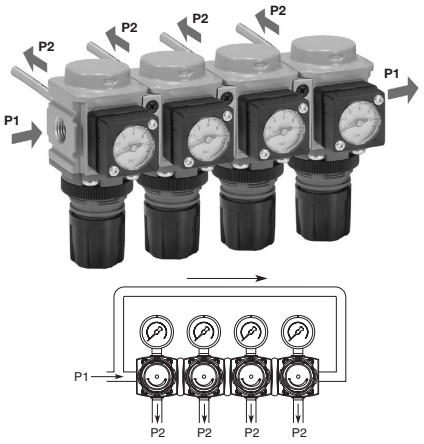

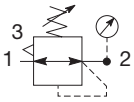

Self relieving regulator with gauge

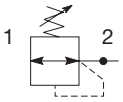

Non-relieving regulator

Port Size	Description (Relieving)	Gauge	Part Number
1/4"	125 psig (8 bar)	None	**P31HB92BNNP**
1/4"	125 psig (8 bar)	Square	**P31HB92BN5P**

Operating information

Flow capacity*: 1/4	42 scfm (20 dm³/s, ANR)
Operating temperature:	-4°F to 150°F (-20°C to 65.5°C)
Supply pressure (max):	300 psig (20 bar)
Adjusting range pressure:	30 psig (0-2 bar) 60 psig (0-4 bar) 125 psig (0-8 bar) 232 psig (0-16 bar)
P1 port size (inlet/outlet)	1/4 NPT, BSPP, BSPT
P2 regulated ports (2 ea.)	1/8 NPT, BSPP, BSPT
Weight:	0.66 lb (0.30 kg)

* Inlet pressure 145 psig (10 bar). Secondary pressure 91.3 psig (6.3 bar) and 14.5 psig (1 bar) pressure drop.

Ordering Information:

P31HB 9 2 B N 5 P

Basic Series
Global Modular Mini Common Regulator — P31HB

Thread Type
BSPP — 1
BSPT — 2
NPT — 9

Port Size †
1/4 — 2
† Working port 1/8".

Relief
Relieving — B
Non-Relieving — N

Adjustment
N — Non-Rising Knob

Mounting
P — Plastic Panel Mount Nut

Adjustment Range

With Square Gauge		With Round Gauge	
psig	Bar		
1 = 30*	V = 2*	Z	30 psig; 2 Bar; 0.2 MPa
3 = 60	S = 4	M	60 psig; 4 Bar; 0.4 MPa
5 = 125	T = 8	G	125 psig; 8 Bar; 0.8 MPa
		J	232 psig; 16 Bar; 1.6 MPa
		Without Gauge	
		Y	30 psig; 2 Bar; 0.2 MPa
		L	60 psig; 4 Bar; 0.4 MPa
		N	125 psig; 8 Bar; 0.8 MPa
		H	232 psig; 16 Bar; 1.6 MPa

* Regulator comes with gauge respective to the adjustment range selected.

☐ Most popular.

For inventory, lead times, and kit lookup, visit www.pdnplu.com

Parker Hannifin Corporation
Pneumatic Division
Richland, Michigan
www.parker.com/pneumatics

Tel: +45 63 12 83 00 | Email: ps@hymatik.com | www.hymatik.com | Hvidkaervej 27a, DK-5250 Odense SV, Denmark

Materials of Construction

Body	Aluminum
Adjustment knob	Acetal
Bonnet	Glass-filled PBT
Diaphragm assembly	Brass / Nitrile
Valve assembly	Brass / Nitrile

Repair and Service Kits

Diaphragm repair kit - relieving	**P31KB00RB**
Diaphragm repair kit - non-relieving	**P31KB00RC**
Panel mount nut - aluminum	**P31KA00MM**
Panel mount nut - plastic	**P31KA00MP**
Angle bracket (attaches via panel nut)	**P31KB00MR**
T-bracket with body connector	**P31KA00MT**
Body connector	**P31KA00CB**

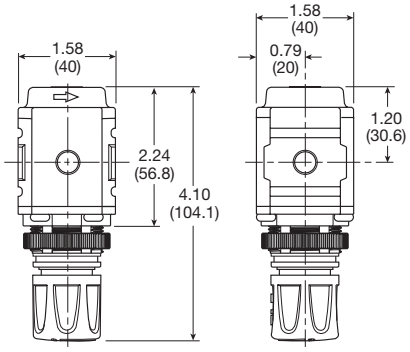

Inches (mm)

NOTE: 1.20 in. (30mm) hole required for panel nut mounting.

Flow Charts

P31HB 1/4" Common Regulator

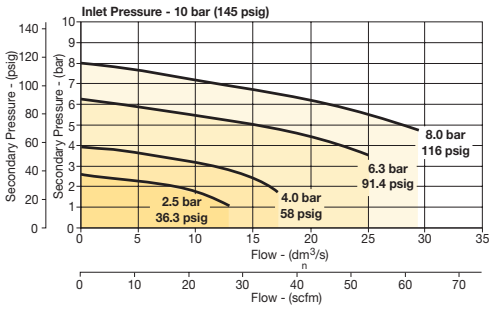

⚠ WARNING

Product rupture can cause serious injury.
Do not connect regulator to bottled gas.
Do not exceed Maximum primary pressure rating.

CAUTION:

REGULATOR PRESSURE ADJUSTMENT – The working range of knob adjustment is designed to permit outlet pressures within their full range. Pressure adjustment beyond this range is also possible because the knob is not a limiting device. This is a common characteristic of most industrial regulators, and limiting devices may be obtained only by special design. For best performance, regulated pressure should always be set by increasing the pressure up to the desired setting.

Gauges

Square with adapter kit	0-4 bar	**P6G-PR10040**
	0-11 bar	**P6G-PR10110**
	0-60 psig	**P6G-PR90060**
	0-160 psig	**P6G-PR90160**
1.00" round 1/8" center back mount	0-60 psig / 0-4 bar	**K4510N18060**
	0-160 psig / 0-11 bar	**K4510N18160**

For best performance, regulated pressure should always be set by increasing the pressure up to the desired setting.

P32 Regulators – Compact

- Integral 1/4", 3/8" or 1/2" ports (NPT, BSPP & BSPT)
- Robust but lightweight aluminum construction
- Secondary pressure ranges
- Secondary aspiration plus balanced poppet provides quick response and accurate pressure regulation
- Relieving & non-relieving types
- Regulator will reverse flow as standard
- Non-rising knob
- Available T-handle



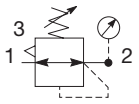

Self relieving regulator with gauge

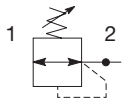

Non-relieving regulator

Port Size	Description (Relieving)	Gauge	Part Number
1/4"	125 psig (8 bar)	None	**P32RB92BNNP**
1/4"	125 psig (8 bar)	Round	**P32RB92BNGP**
3/8"	125 psig (8 bar)	None	**P32RB93BNNP**
3/8"	125 psig (8 bar)	Round	**P32RB93BNGP**
1/2"	125 psig (8 bar)	None	**P32RB94BNNP**
1/2"	125 psig (8 bar)	Round	**P32RB94BNGP**

Operating information

Flow capacity*:	
1/4	148 scfm (70 dm³/s, ANR)
3/8, 1/2	165 scfm (78 dm³/s, ANR)
Operating temperature:	-13°F to 150°F (-25°C to 65.5°C)
Supply pressure (max):	300 psig (20 bar)
Adjusting range pressure:	30 psig (0-2 bar) 60 psig (0-4 bar) 125 psig (0-8 bar) 250 psig (0-17 bar)
Gauge port (2 each)	1/4 NPT, BSPP, BSPT
Weight:	0.90 lb (0.41 kg)

* Inlet pressure 145 psig (10 bar). Secondary pressure 91.3 psig (6.3 bar) and 14.5 psig (1 bar) pressure drop.

Ordering Information:

P32RB 9 2 B N G P

Basic Series

Global Modular Compact Regulator	P32RB

Thread Type

BSPP	1
BSPT	2
NPT	9

Port Size

1/4	2
3/8	3
1/2	4

Relief

Relieving	B
Non-Relieving	N

Adjustment

N	Non-Rising Knob
T	T-Handle

Mounting

P	Plastic Panel Mount Nut

Adjustment Range

With Square Gauge		With Round Gauge	
psig	Bar		
1 = 30*	V = 2*	Z	30 psig; 2 Bar; 0.2 MPa
3 = 60	S = 4	M	60 psig; 4 Bar; 0.4 MPa
5 = 125	T = 8	G	125 psig; 8 Bar; 0.8 MPa
		J	250 psig; 17 Bar; 1.7 MPa
		Without Gauge	
		Y	30 psig; 2 Bar; 0.2 MPa
		L	60 psig; 4 Bar; 0.4 MPa
		N	125 psig; 8 Bar; 0.8 MPa
		H	250 psig; 17 Bar; 1.7 MPa

* Regulator comes with gauge respective to the adjustment range selected.

☐ Most popular.

Parker Hannifin Corporation
Pneumatic Division
Richland, Michigan
www.parker.com/pneumatics

Tel: +45 63 12 83 00 | Email: ps@hymatik.com | www.hymatik.com | Hvidkaervej 27a, DK-5250 Odense SV, Denmark

Material Specifications

Body	Aluminum
Adjustment knob	Acetal
Bonnet	Glass-filled nylon
Diaphragm assembly	Nitrile / Zinc
Valve assembly	Brass / Nitrile
Springs	Steel, stainless steel
Seals	Nitrile
Panel nut	Acetal

Repair and Service Kits

Diaphragm repair kit - relieving	**P32KB00RB**
Diaphragm repair kit - non-relieving	**P32KB00RC**
Panel mount nut - aluminum	**P32KA00MM**
Panel mount nut - plastic	**P32KA00MP**
Angle bracket (attaches via panel nut)	**P32KB00MR**
T-bracket with body connector	**P32KA00MT**
T-bracket	**P32KA00MB**
Body connector	**P32KA00CB**

⚠ WARNING

Product rupture can cause serious injury.
Do not connect regulator to bottled gas.
Do not exceed Maximum primary pressure rating.

CAUTION:

REGULATOR PRESSURE ADJUSTMENT – The working range of knob adjustment is designed to permit outlet pressures within their full range. Pressure adjustment beyond this range is also possible because the knob is not a limiting device. This is a common characteristic of most industrial regulators, and limiting devices may be obtained only by special design. For best performance, regulated pressure should always be set by increasing the pressure up to the desired setting.

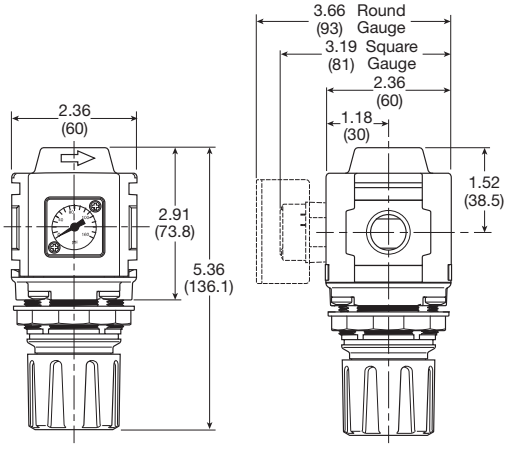

Inches (mm)

NOTE: 1.90 in. (48mm) hole required for panel nut mounting.

Flow Charts

P32RB 1/4" Regulator

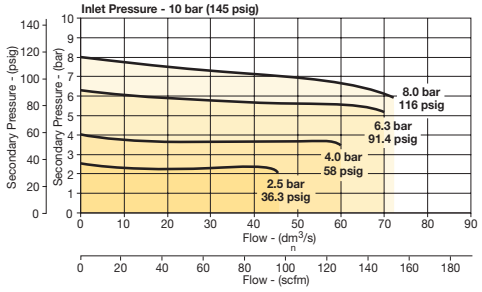

P32RB 3/8" Regulator

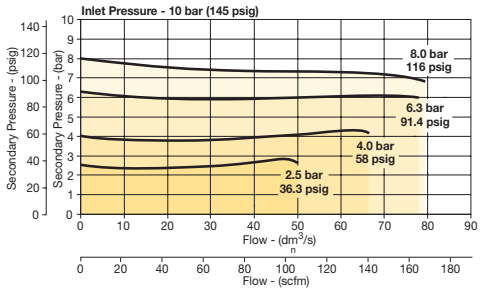

P32RB 1/2" Regulator

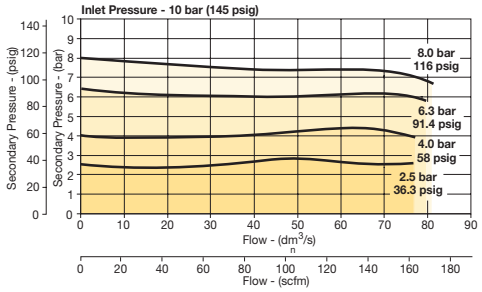

Gauges

Square flush mount gauge	0-4 bar	**K4511SCR04B**
	0-11 bar	**K4511SCR11B**
	0-60 psig	**K4511SCR060**
	0-160 psig	**K4511SCR160**
Square with adapter kit	0-4 bar	**P6G-PR10040**
	0-11 bar	**P6G-PR10110**
	0-60 psig	**P6G-PR90060**
	0-160 psig	**P6G-PR90160**
50mm (2") round 1/4" center back mount	0-30 psig / 0-2 bar	**K4520N14030**
	0-60 psig / 0-4 bar	**K4520N14060**
	0-160 psig / 0-11 bar	**K4520N14160**
	0-300 psig / 0-20 bar	**K4520N14300**

For best performance, regulated pressure should always be set by increasing the pressure up to the desired setting.

For inventory, lead times, and kit lookup, visit www.pdnplu.com

Parker Hannifin Corporation
Pneumatic Division
Richland, Michigan
www.parker.com/pneumatics

Tel: +45 63 12 83 00 | Email: ps@hymatik.com | www.hymatik.com | Hvidkaervej 27a, DK-5250 Odense SV, Denmark

P32 Semi-Precision Regulator – Compact

- Integral 1/4", 3/8" or 1/2" ports (NPT, BSPP & BSPT)
- Robust but lightweight aluminum construction
- Secondary pressure ranges
- Secondary aspiration plus balanced poppet provides quick response and accurate pressure regulation
- Relieving & non-relieving types
- Regulator will reverse flow as standard
- Non-rising knob



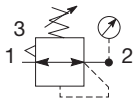

Self relieving regulator with gauge

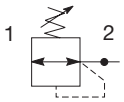

Non-relieving regulator

Port Size	Description (Relieving)	Gauge	Part Number
1/4"	125 psig (8 bar)	None	**P32RB92PNNP**
1/4"	125 psig (8 bar)	Round	**P32RB92PNGP**
3/8"	125 psig (8 bar)	None	**P32RB93PNNP**
3/8"	125 psig (8 bar)	Round	**P32RB93PNGP**
1/2"	125 psig (8 bar)	None	**P32RB94PNNP**
1/2"	125 psig (8 bar)	Round	**P32RB94PNGP**

Operating information

Flow capacity*: 1/4, 3/8, 1/2	53 scfm (25 dm³/s, ANR)
Effect of supply pressure variation	0.6 psig (0.04 bar) for 25 psig (1.7 bar) change in P1
Operating temperature:	-13°F to 150°F (-25°C to 65.5°C)
Supply pressure (max):	300 psig (20 bar)
Adjusting range pressure:	0 to 30 psig (0 to 2 bar) 0 to 60 psig (0 to 4 bar) 0 to 125 psig (0 to 8 bar) 0 to 250 psig (0 to 17 bar)
Gauge port (2 each):	1/4 NPT, BSPP, BSPT
Weight:	0.90 lb (0.41 kg)

* Inlet pressure 145 psig (10 bar). Secondary pressure 91.3 psig (6.3 bar) and 14.5 psig (1 bar) pressure drop.

Ordering Information:

P32RB 9 2 P N G P

Basic Series

Global Modular Compact Regulator	P32RB

Thread Type

BSPP	1
BSPT	2
NPT	9

Port Size

1/4	2
3/8	3
1/2	4

Relief

Semi-Precision Relieving	P
Semi-Precision Non-Relieving	N

Adjustment

N	Non-Rising Knob
T	T-Handle

Adjustment Range

With Square Gauge		With Round Gauge	
psig	Bar		
1 = 30*	V = 2*	Z	30 psig; 2 Bar; 0.2 MPa
3 = 60	S = 4	M	60 psig; 4 Bar; 0.4 MPa
5 = 125	T = 8	G	125 psig; 8 Bar; 0.8 MPa
		J	250 psig; 17 Bar; 1.7 MPa
		Without Gauge	
		Y	30 psig; 2 Bar; 0.2 MPa
		L	60 psig; 4 Bar; 0.4 MPa
		N	125 psig; 8 Bar; 0.8 MPa
		H	250 psig; 17 Bar; 1.7 MPa

* Regulator comes with gauge respective to the adjustment range selected.

Mounting

P	Plastic Panel Mount Nut

☐ Most popular.

For inventory, lead times, and kit lookup, visit www.pdnplu.com

Parker Hannifin Corporation
Pneumatic Division
Richland, Michigan
www.parker.com/pneumatics

Tel: +45 63 12 83 00 | Email: ps@hymatik.com | www.hymatik.com | Hvidkaervej 27a, DK-5250 Odense SV, Denmark

Material Specifications

Body	Aluminum
Adjustment knob	Acetal
Bonnet	Glass-filled nylon
Diaphragm assembly	Nitrile / zinc
Valve assembly	Brass / nitrile
Springs	Steel, stainless steel
Seals	Nitrile
Panel nut	Acetal

Repair and Service Kits

Diaphragm repair kit - relieving	**P32KB00RB**
Diaphragm repair kit - non-relieving	**P32KB00RC**
Panel mount nut - aluminum	**P32KA00MM**
Panel mount nut - plastic	**P32KA00MP**
Angle bracket (attaches via panel nut)	**P32KB00MR**
T-bracket with body connector	**P32KA00MT**
T-bracket	**P32KA00MB**
Body connector	**P32KA00CB**

⚠ WARNING

Product rupture can cause serious injury.
Do not connect regulator to bottled gas.
Do not exceed Maximum primary pressure rating.

CAUTION:

REGULATOR PRESSURE ADJUSTMENT – The working range of knob adjustment is designed to permit outlet pressures within their full range. Pressure adjustment beyond this range is also possible because the knob is not a limiting device. This is a common characteristic of most industrial regulators, and limiting devices may be obtained only by special design. For best performance, regulated pressure should always be set by increasing the pressure up to the desired setting.

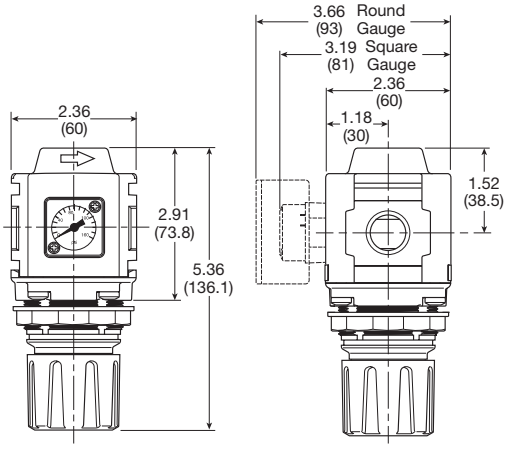

Inches (mm)

NOTE: 1.90 in. (48mm) hole required for panel nut mounting.

Flow Charts

P32RB 1/4" Regulator

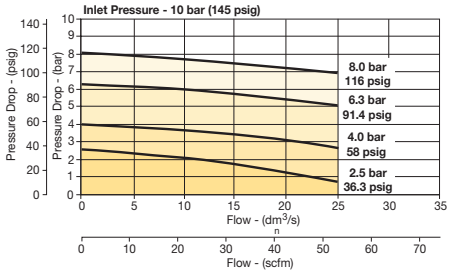

P32RB 3/8" Regulator

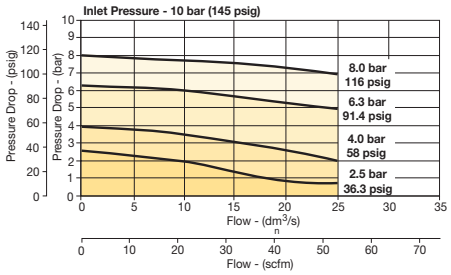

P32RB 1/2" Regulator

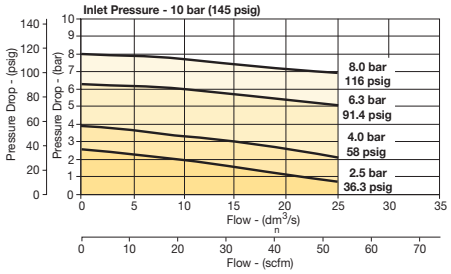

Gauges

Square flush mount gauge	0-4 bar	**K4511SCR04B**
	0-11 bar	**K4511SCR11B**
	0-60 psig	**K4511SCR060**
	0-160 psig	**K4511SCR160**
Square with adapter kit	0-4 bar	**P6G-PR10040**
	0-11 bar	**P6G-PR10110**
	0-60 psig	**P6G-PR90060**
	0-160 psig	**P6G-PR90160**
50mm (2") round 1/4" center back mount	0-30 psig / 0-2 bar	**K4520N14030**
	0-60 psig / 0-4 bar	**K4520N14060**
	0-160 psig / 0-11 bar	**K4520N14160**
	0-300 psig / 0-20 bar	**K4520N14300**

For best performance, regulated pressure should always be set by increasing the pressure up to the desired setting.

For inventory, lead times, and kit lookup, visit www.pdnplu.com

Parker Hannifin Corporation
Pneumatic Division
Richland, Michigan
www.parker.com/pneumatics

Tel: +45 63 12 83 00 | Email: ps@hymatik.com | www.hymatik.com | Hvidkaervej 27a, DK-5250 Odense SV, Denmark

P32 Common - P1 Regulator – Compact

- Manifold style regulator with line pressure on both sides.
- Pressure output is at front or rear.
- Inlet ports 1/4", 3/8" or 1/2" (NPT, BSPP & BSPT)
- Working port 1/4"
- Robust construction
- Secondary pressure ranges
- Secondary aspiration plus balanced poppet provides quick response and accurate pressure regulation
- Relieving & non-relieving types
- Regulator will reverse flow as standard
- Non-rising knob

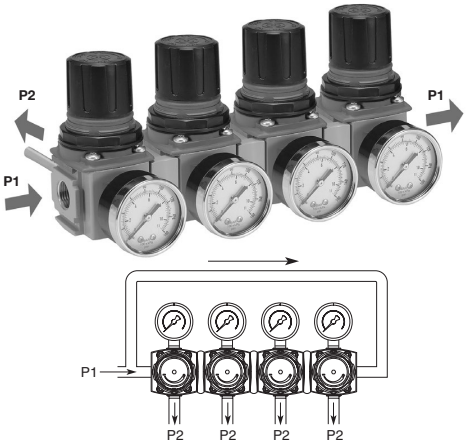

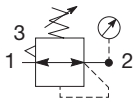

Self relieving regulator with gauge

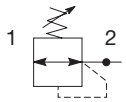

Non-relieving regulator

Port Size	Description (Relieving)	Gauge	Part Number
1/4"	125 psig (8 bar)	None	**P32HB92BNNP**
3/8"	125 psig (8 bar)	None	**P32HB93BNNP**
1/2"	125 psig (8 bar)	None	**P32HB94BNNP**

Operating information

Flow capacity*: 1/4, 3/8, 1/2	64 scfm (30 dm³/s, ANR)
Operating temperature:	-25°C to 65.5°C (-13°F to 150°F)
Supply pressure (max):	300 psig (20 bar)
Adjusting range pressure:	0 to 30 psig (0 to 2 bar) 0 to 60 psig (0 to 4 bar) 0 to 125 psig (0 to 8 bar) 0 to 232 psig (0 to 16 bar)
Gauge port (2 each):	1/4 NPT, BSPP, BSPT
Weight:	0.50 lb (0.23 kg)

* Inlet pressure 145 psig (10 bar). Secondary pressure 91.3 psig (6.3 bar) and 14.5 psig (1 bar) pressure drop.

Ordering Information:

P32HB 9 2 B N N P

Basic Series	
Global Modular Compact Regulator	P32HB

Thread Type	
BSPP	1
BSPT	2
NPT	9

Port Size †	
1/4	2
3/8	3
1/2	4

† Working port 1/4".

Relief	
Relieving	B
Non-Relieving	N

Adjustment	
N	Non-Rising Knob
T	T-Handle

Mounting	
P	Plastic Panel Mount Nut

Adjustment Range		
With Square Gauge		With Round Gauge
psig	Bar	
1 = 30*	V = 2*	Z 30 psig; 2 Bar; 0.2 MPa
3 = 60	S = 4	M 60 psig; 4 Bar; 0.4 MPa
5 = 125	T = 8	G 125 psig; 8 Bar; 0.8 MPa
		J 250 psig; 17 Bar; 1.7 MPa
		Without Gauge
		Y 30 psig; 2 Bar; 0.2 MPa
		L 60 psig; 4 Bar; 0.4 MPa
		N 125 psig; 8 Bar; 0.8 MPa
		H 250 psig; 17 Bar; 1.7 MPa

* Regulator comes with gauge respective to the adjustment range selected.

☐ Most popular.

Parker Hannifin Corporation
Pneumatic Division
Richland, Michigan
www.parker.com/pneumatics

Material Specifications

Body	Aluminum
Adjustment knob	Acetal
Bonnet	Glass-filled nylon
Diaphragm assembly	Nitrile / zinc
Valve assembly	Brass / nitrile
Springs	Steel, stainless steel
Seals	Nitrile
Panel nut	Acetal

Repair and Service Kits

Diaphragm repair kit - relieving	**P32KB00RB**
Diaphragm repair kit - non-relieving	**P32KB00RC**
Panel mount nut - aluminum	**P32KA00MM**
Panel mount nut - plastic	**P32KA00MP**
Angle bracket (attaches via panel nut)	**P32KB00MR**
T-bracket with body connector	**P32KA00MT**
T-bracket	**P32KA00MB**
Body connector	**P32KA00CB**

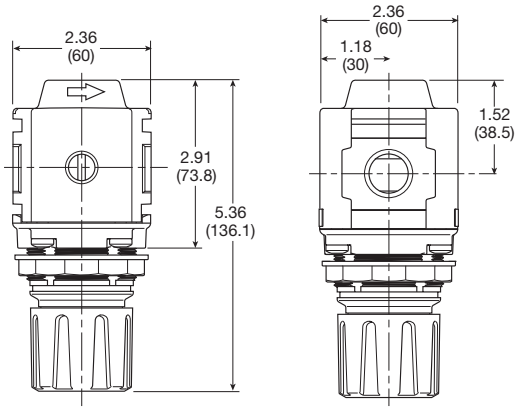

Inches (mm)

NOTE: 1.90 in. (48mm) hole required for panel nut mounting.

Flow Charts

P32HB Common Port Regulator

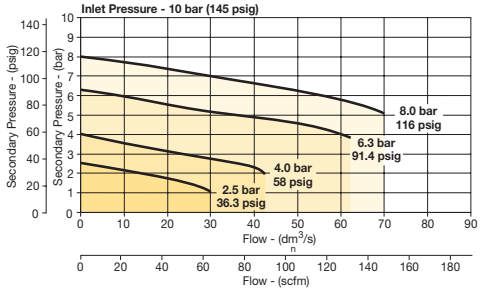

⚠ WARNING

Product rupture can cause serious injury.
Do not connect regulator to bottled gas.
Do not exceed Maximum primary pressure rating.

CAUTION:

REGULATOR PRESSURE ADJUSTMENT – The working range of knob adjustment is designed to permit outlet pressures within their full range. Pressure adjustment beyond this range is also possible because the knob is not a limiting device. This is a common characteristic of most industrial regulators, and limiting devices may be obtained only by special design. For best performance, regulated pressure should always be set by increasing the pressure up to the desired setting.

Gauges

Square flush mount gauge	0-4 bar	**K4511SCR04B**
	0-11 bar	**K4511SCR11B**
	0-60 psig	**K4511SCR060**
	0-160 psig	**K4511SCR160**
Square with adapter kit	0-4 bar	**P6G-PR10040**
	0-11 bar	**P6G-PR10110**
	0-60 psig	**P6G-PR90060**
	0-160 psig	**P6G-PR90160**
50mm (2") round 1/4" center back mount	0-30 psig / 0-2 bar	**K4520N14030**
	0-60 psig / 0-4 bar	**K4520N14060**
	0-160 psig / 0-11 bar	**K4520N14160**
	0-300 psig / 0-20 bar	**K4520N14300**

For best performance, regulated pressure should always be set by increasing the pressure up to the desired setting.

Parker Hannifin Corporation
Pneumatic Division
Richland, Michigan
www.parker.com/pneumatics

P33 Regulators – Standard

- Integral 1/2" or 3/4" ports (NPT, BSPP & BSPT)
- Robust but lightweight aluminum construction
- Secondary pressure ranges
- Secondary aspiration plus balanced poppet provides quick response and accurate pressure regulation
- Relieving & non-relieving types
- Non-rising knob



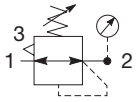

Self relieving regulator with gauge

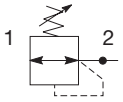

Non-relieving regulator

Port Size	Description (Relieving)	Gauge	Part Number
1/2"	125 psig (8 bar)	None	**P33RA94BNNP**
1/2"	125 psig (8 bar)	Round	**P33RA94BNGP**
3/4"	125 psig (8 bar)	None	**P33RA96BNNP**
3/4"	125 psig (8 bar)	Round	**P33RA96BNGP**

Operating information

Flow capacity*:	
1/2, 3/4	233 scfm (110 dm³/s, ANR)
Operating temperature:	-13°F to 150°F (-25°C to 65.5°C)
Supply pressure (max):	300 psig (20 bar)
Adjusting range pressure:	0 to 30 psig (0 to 2 bar) 0 to 60 psig (0 to 4 bar) 0 to 125 psig (0 to 8 bar) 0 to 250 psig (0 to 17 bar)
Gauge port (2 each):	1/4 NPT, BSPP, BSPT
Weight:	1.37 lb (0.62 kg)

* Inlet pressure 145 psig (10 bar). Secondary pressure 91.3 psig (6.3 bar) and 14.5 psig (1 bar) pressure drop.

Ordering Information:

P33RA 9 6 B N G P

Basic Series
Global Modular Standard Regulator — P33RA

Thread Type
BSPP 1
BSPT 2
NPT 9

Port Size
1/2 4
3/4 6

Relief
Relieving B
Non-Relieving N
Reverse Flow-Relieving R

Adjustment
Non-Rising Knob N

Adjustment Range
With Round Gauge
Z 30 psig; 2 Bar; 0.2 MPa
M 60 psig; 4 Bar; 0.4 MPa
G 125 psig; 8 Bar; 0.8 MPa
J 250 psig; 17 Bar; 1.7 MPa
Without Gauge
Y 30 psig; 2 Bar; 0.2 MPa
L 60 psig; 4 Bar; 0.4 MPa
N 125 psig; 8 Bar; 0.8 MPa
H 250 psig; 17 Bar; 1.7 MPa

Mounting
P Plastic Panel Mount Nut

☐ Most popular.

Tel: +45 63 12 83 00 | Email: ps@hymatik.com | www.hymatik.com | Hvidkaervej 27a, DK-5250 Odense SV, Denmark

Material Specifications

Body	Aluminum
Adjustment knob	Acetal
Body cap	ABS
Bonnet	Glass-filled nylon
Diaphragm assembly	Nitrile / zinc
Valve assembly	Brass / nitrile
Springs	Steel, stainless steel
Seals	Nitrile
Panel nut	Acetal

Repair and Service Kits

Diaphragm repair kit - relieving	**P33KA00RB**
Diaphragm repair kit - non-relieving	**P33KA00RC**
Panel mount nut - aluminum	**P33KA00MM**
Panel mount nut - plastic	**P33KA00MP**
Angle bracket (attaches via panel nut)	**P33KA00MR**
T-bracket with body connector	**P32KA00MT**
T-bracket	**P32KA00MB**
Body connector	**P32KA00CB**

⚠ WARNING

Product rupture can cause serious injury.
Do not connect regulator to bottled gas.
Do not exceed Maximum primary pressure rating.

CAUTION:

REGULATOR PRESSURE ADJUSTMENT – The working range of knob adjustment is designed to permit outlet pressures within their full range. Pressure adjustment beyond this range is also possible because the knob is not a limiting device. This is a common characteristic of most industrial regulators, and limiting devices may be obtained only by special design. For best performance, regulated pressure should always be set by increasing the pressure up to the desired setting.

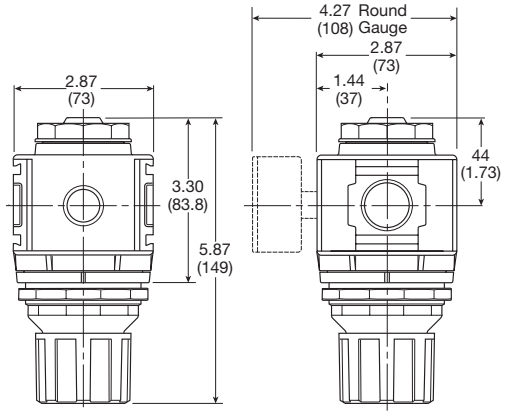

Inches (mm)

NOTE: 2.40 in. (61mm) hole required for panel nut mounting.

Flow Charts

P33RA 1/2" Regulator

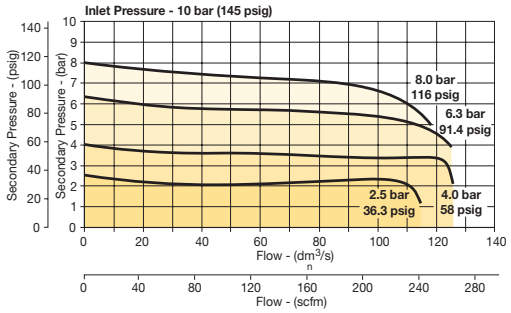

P33RA 3/4" Regulator

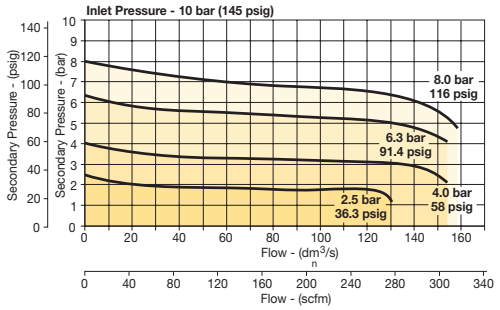

Gauges

50mm (2") round 1/4" center back mount	0-30 psig / 0-2 bar	**K4520N14030**
	0-60 psig / 0-4 bar	**K4520N14060**
	0-160 psig / 0-11 bar	**K4520N14160**
	0-300 psig / 0-20 bar	**K4520N14300**

For best performance, regulated pressure should always be set by increasing the pressure up to the desired setting.

For inventory, lead times, and kit lookup, visit www.pdnplu.com

Parker Hannifin Corporation
Pneumatic Division
Richland, Michigan
www.parker.com/pneumatics

Tel: +45 63 12 83 00 | Email: ps@hymatik.com | www.hymatik.com | Hvidkaervej 27a, DK-5250 Odense SV, Denmark

P31P & P32P Proportional Regulators

- Very fast response times
- Accurate output pressure
- Parameter settings
- Selectable I/O parameters
- Quick, full flow exhaust
- LED display indicates output pressure
- No air consumption in steady state
- Multiple mounting options
- Protection to IP65

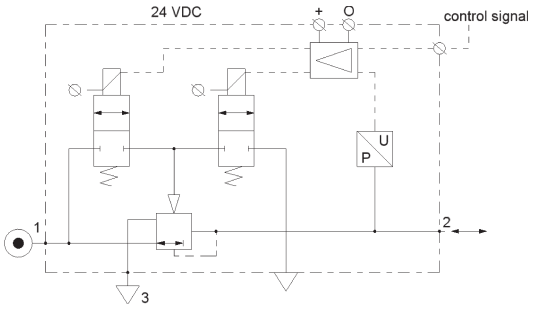



P31P Series
Bottom exhaust



P32P Series
Bottom exhaust

Port Size	Description	Part Number
1/4"	145 psig (0-10 bar), NC 0-10V	**P31PA92AD2VD1A**
1/2"	145 psig (0-10 bar), NC 0-10V	**P32PA94AD2VD1A**

Operating information

Flow capacity*:	P31P	40 scfm (19 dm³/s, ANR)
	P32P	120 scfm (57 dm³/s, ANR)
Temperature range:		32°F to 122°F (0°C to 50°C)
Supply pressure (max):		
2 bar unit		36.3 psig (2.5 bar)
10 bar unit		152 psig (10.5 bar)
Operating pressure (min):		P2 pressure + 7.3 psig (0.5 bar)
Working medium:		Compressed air or inert gasses, filtered to 40µ
Pressure range:		0 to 30 psig (0 to 2 bar) 0 to 145 psig (0 to 10 bar)
Weight:	P31P	0.64 lb (0.291 kg)
	P32P	1.42 lb (0.645 kg)

* Inlet pressure 91.3 psig (6.3 bar), inlet pressure and 4.9 psig (0.34 bar) pressure drop.

Ordering Information:

P31PA 9 2 A D 2 V D 1 A

Body Size

Global Modular Mini (1/4")	P31PA
Global Modular Compact (1/2")	P32PA

Thread Type

BSPP	1
BSPT	2
NPT	9

Port Size

Global Modular Mini (1/4")	2
Global Modular Compact (1/2")	4

Version

Bottom Ported Exhaust (NC)	A
Bottom Ported Forced Exhaust (NO)†	E

† When the supply voltage is lost the unit will automatically exhaust the regulated pressure to 0 bar (atmospheric pressure)

Pressure Range

Z	0 - 29 psig (0 - 2 Bar)
D	0 - 145 psig (0 - 10 Bar)

Power Supply

2	24 Volts

Control Signal

V	0-10V‡

‡ Factory setting is 0-10 V control signal. 4-20 mA control signal available via parameter 4 on keypad.

Input Connector

1	M12 (4-pin)

Output Signal

D	Digital, PNP
P	PNP or 0-10V
N	NPN or 0-10V
M	4-20mA Fixed

D) Digital PNP output only, no analog output selectable
P) Digital PNP and analogue 0-10V outputs selectable, by means of parameter 6. (Factory default 0-10V)
N) Digital NPN and analog 0-10 V outputs selectable by means of parameter 6. Factory default 0-10V)
M) Analog 4-20mA output only.
Note: On all analog outputs the F.S. value can be adjusted by means of parameter 8.

☐ Most popular.

Parker Hannifin Corporation
Pneumatic Division
Richland, Michigan
www.parker.com/pneumatics

Tel: +45 63 12 83 00 | Email: ps@hymatik.com | www.hymatik.com | Hvidkaervej 27a, DK-5250 Odense SV, Denmark

Technical Information

Accuracy
+/- 1.0% of F.S.*

* Full scale (F.S.) - For 2 bar (29 psig) versions this will be 2 bar (29 psig), for the 10 bar (145 psig) version full scale will be 10 bar (145 psig).

Air consumption
No consumption in stable regulated situation.

Display
The regulator is provided with a digital display, indicating the output pressure, either in bar or psig.

The factory setting is as indicated on the label, can be changed through to software at all times (parameter 14)

Supply voltage
24 VDC +/- 10%

Power consumption
Max. 1.1W with unloaded signal outputs

Control signals
The electronic pressure regulator can be externally controlled through an analogue control signal of either 0-10V or 4-20mA. (parameter 4).

Output signals
As soon as the output pressure is within the signal band a signal is given of 24VDC, PNP Ri = 1 kOhm
Outside the signal band this connection is 0V.

Connections
(In case of output signal (Option D)
Central M12 connector 4-pole
The electrical connections are as follows:

Pin No.		Function	Color
1	24 V	Supply	Brown
2	0 to 10 V	Control Signal Ri = 100k Ω	White
	4 to 20mA	Control Signal Ri = 500 Ω	
3	0 V (GND)	Supply & Set Point Ground	Blue
4	24 V	Alarm Output Signal	Black

Flow Charts

P31P Regulator 1/4" Ports

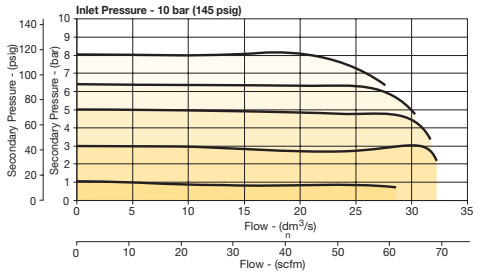

P32P Regulator 1/2" Ports

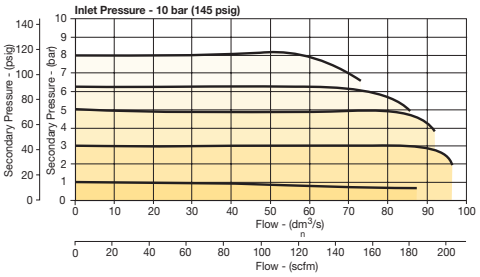

Degree of protection: IP65

EU conformity
CE: standard
EMC: according to directive 89/336/EEC
This pressure regulator is in accordance with:

EN 61000-6-1:2001 **EN 61000-6-2:2001**
EN 61000-6-3:2001 **EN 61000-6-4:2001**

Mounting position
Preferably vertical, with the cable gland on top.

Materials: P31P & P32P

Magnet core	Steel
Solenoid valve poppet	FPM
Solenoid valve housing	Techno polymer
Regulator body (P31P & P32P versions)	Aluminum
Regulator top housing	Nylon
Valve head	Brass & NBR
Remaining seals	NBR

Tel: +45 63 12 83 00 | Email: ps@hymatik.com | www.hymatik.com | Hvidkaervej 27a, DK-5250 Odense SV, Denmark

How to change parameters – How to Videos available at www.parker.com/pneu/propreg

Pressing the Accept key "acc" for more than 3 seconds, will activate parameter change mode. The user can then select the parameters by pressing up or down key (display will show Pxx). When parameter number is correct, pressing accept again will enter parameter number (display will show parameter value).

Pressing the up or down key will change the parameter itself (display will flash indicating parameter editing mode). Pressing the accept key will accept the new parameter value (all digits will flash whilst being accepted).

After releasing all keys, the next parameter number will be presented on the display (you may step to the next parameter). When no key is pressed, after 3 seconds the display will show the actual output pressure.

When the unit is initially powered up allow approximately 10 seconds for the unit to "boot-up" before changing parameter settings.

Only parameter numbers 0, 4, 6, 8, 9, 14, 18, 19, 20, 12, 13 and 21 are accessible to edit. All other parameters are fixed.

Manual mode:
When keys DOWN and UP are pressed during startup, (connecting to the 24V power supply) manual mode is activated. This means that the user is able to in/decrease the output pressure of the regulator, by pressing the UP or DOWN key. During this action the display will blink, indicating that the manual mode is activated. After powering up again, the unit will revert back to normal mode.

Back to Factory Setting

After start up. (Power is on)
Entering this value in parameter 0 will store the calibrated factory data into the working parameters.
(Default calibration data is used)

Parameter Number 0 – Reset Back to Factory Settings

Step	1	2	3	4	5	
Press	acc 3-6 seconds	▼ or ▲	acc	▼ or ▲	acc	
Until Display Reads	Pxx	P00	000. Flashing Decimal	003. Flashing Decimal	003 Flashing	P01
Description	Accesses changeable parameters.	Accesses parameter no. 0.	Displays current parameter value.	Edits parameter. 3 = standard factory settings. If other than 3, use Up or Down Arrow and accept 3	Accepts and saves new parameter setting.	Sequences to next parameter.

Set Control Signal

The unit is factory set for 0-10 V control signal. If 4-20 mA control signal is required, change parameter 4.

Parameter Number 4 – Set Control Signal in Volts or Milliamps

Step	1	2	3	4	5	
Press	acc 3-6 seconds	▼ or ▲	acc	▼ or ▲	acc	
Until Display Reads	Pxx	P04	001. Flashing Decimal	000. Flashing Decimal	000 Flashing	P05
Description	Accesses changeable parameters.	Accesses parameter no. 4.	Displays current parameter value. 1 = V 0 = mA	Edits parameter.	Accepts and saves new parameter setting.	Sequences to next parameter.

How to Videos at www.parker.com/pneu/propreg

For inventory, lead times, and kit lookup, visit www.pdnplu.com

Parker Hannifin Corporation
Pneumatic Division
Richland, Michigan
www.parker.com/pneumatics

Tel: +45 63 12 83 00 | Email: ps@hymatik.com | www.hymatik.com | Hvidkaervej 27a, DK-5250 Odense SV, Denmark

Set Output Signal

Parameter 6 is used to set the type of output signal to your PLC.
This parameter is used as follows:

Output Signal option "0" = Digital Output – PNP
- Factory set at "0" Non Adjustable

Output Signal option "P" = Digital PNP or Analog 1-10V
- Factory set at "1" for Analog Signal
- Convert to Digital PNP by changing parameter to "0" setting

Output Signal option "N" = Digital NPN or Analog 1-10V
- Factory set at "1" Analog Signal
- Convert to Digital NPN by changing parameter to "0"

Output Signal option "M" = Analog 4-20 mA
- Factory set at "2" Non Adjustable

Parameter Number 6 – Set Output Signal

Step	1	2	3	4	5	
Press	acc 3-6 seconds	▼ or ▲	acc	▼ or ▲	acc	
Until Display Reads	Pxx	P06	001. Flashing Decimal	###. Flashing Decimal (Value 0, 1 or 2)	###. Flashing	P07
Description	Accesses changeable parameters.	Accesses parameter no. 6.	Displays current parameter value. 1 = m factory default for P3H with analog options	Edits parameter. 0 = digital (NPN or PNP) 1 = analog 0..10V 2 = analog 4..20 mA	Accepts and saves new parameter setting.	Sequences to next parameter.

Adjust Span Analog Output Signal

Set value is a % of Full Analog range. As an example for a 0-10V output signal, the original factory setting of 100% will give you an adjustment of 0-10V. If you reset Parameter 8 to 50%, the new output range would be 0-5V or 50% of the full range.

In the event that the output signal is to low, in a certain application, you can adjust it by increasing Parameter 8 to a maximum value of 130% of scale.

Note that all values are nominal and that an actual measurement may be required to ensure signal strength.

Parameter Number 8 – Adjust Span Analog Output Signal

Step	1	2	3	4	5	
Press	acc 3-6 seconds	▼ or ▲	acc	▼ or ▲	acc	
Until Display Reads	Pxx	P08	100. Flashing Decimal (For 2 bar versions value = 92)	###. Flashing Decimal (Value between 0 and 130)	###. Flashing	P09
Description	Accesses changeable parameters.	Accesses parameter no. 8.	Displays current parameter value.	Edits parameter.	Accepts and saves new parameter setting and implements the new analog signal span.	Sequences to next parameter.

How to Videos at www.parker.com/pneu/propreg

For inventory, lead times, and kit lookup, visit www.pdnplu.com

Parker Hannifin Corporation
Pneumatic Division
Richland, Michigan
www.parker.com/pneumatics

Tel: +45 63 12 83 00 | Email: ps@hymatik.com | www.hymatik.com | Hvidkaervej 27a, DK-5250 Odense SV, Denmark

Adjust Digital Display

If necessary, adjustments can be made to the digital display when using an external pressure sensor.

Parameter Number 9 – Adjust Digital Display Value (Pressure Calibration)

Step	1	2	3	4	5	
Press	acc 3-6 seconds	▼ or ▲	acc	▼ or ▲	acc	
Until Display Reads	Pxx	P09	###. Flashing Decimal	###. Flashing Decimal	### Flashing	P 10
Description	Accesses changeable parameters.	Accesses parameter no. 9.	Displays current digital display	Use up or down arrows and accept to adjust the display value if using an external pressure sensor.	Accepts and saves new parameter setting.	Sequences to next parameter.

Set Pressure Scale

Units with NPT port threads are supplied with a factory set psig pressure scale. Use parameter 14 to change scale to bar.

Parameter Number 14 – Set Pressure Scale in psig or bar

Step	1	2	3	4	5	
Press	acc 3-6 seconds	▼ or ▲	acc	▼ or ▲	acc	
Until Display Reads	Pxx	P 14	001. Flashing Decimal	000. Flashing Decimal	000 Flashing	P 15
Description	Accesses changeable parameters.	Accesses parameter no. 14.	Displays current parameter value. 1 = psig 0 = bar 2 = MPa	Edits parameter.	Accepts and saves new parameter setting.	Sequences to next parameter.

How to Videos at www.parker.com/pneu/propreg

For inventory, lead times, and kit lookup, visit www.pdnplu.com

Parker Hannifin Corporation
Pneumatic Division
Richland, Michigan
www.parker.com/pneumatics

Tel: +45 63 12 83 00 | Email: ps@hymatik.com | www.hymatik.com | Hvidkaervej 27a, DK-5250 Odense SV, Denmark

Preset Minimum Pressure

If there is a need for a pre-set Minimum pressure, use parameter 18. (Note: preset pressure is affected by % P19.)

Parameter Number 18 – Set Minimum Preset Pressure

Step	1	2	3	4	5	
Press	acc 3-6 seconds	▼ or ▲	acc	▼ or ▲	acc	
Until Display Reads	Pxx	P 18	000.	# # #. Flashing Decimal (value between 0 and 200)	# # # Flashing	P 19
Description	Accesses changeable parameters.	Accesses parameter no. 18.	Displays current parameter value. Incremental value is: 2 bar unit: x 2 mbar x % P19 10 bar unit: x 10 mbar x % P19	Edits parameter.	Accepts and saves new parameter setting.	Sequences to next parameter.

Set Pressure Correction

Pressure correction allows the user to set a Maximum pressure as a percentage of secondary pressure F.S.

Example: If F.S. is 10 bar, set parameter 19 to 50 for Maximum preset pressure of 5 bar.

Pressure correction also affects the Minimum preset pressure in parameter 18.

Example: If F.S. is 10 bar and parameter 18 is set to a value of 100 (1 bar), and parameter 19 is set to 50%, then the actual Minimum preset pressure seen is 0.5 bar.

Parameter Number 19 – Set Maximum Preset Pressure

Step	1	2	3	4	5	
Press	acc 3-6 seconds	▼ or ▲	acc	▼ or ▲	acc	
Until Display Reads	Pxx	P 19	100.	# # #. Flashing Decimal (value between 0 and 100)	# # # Flashing	P20
Description	Accesses changeable parameters.	Accesses parameter no. 19.	Displays current parameter value. Incremental value is: % of F.S.	Edits parameter.	Accepts and saves new parameter setting.	Sequences to next parameter.

How to Videos at www.parker.com/pneu/propreg

For inventory, lead times, and kit lookup, visit www.pdnplu.com

Parker Hannifin Corporation
Pneumatic Division
Richland, Michigan
www.parker.com/pneumatics

Tel: +45 63 12 83 00 | Email: ps@hymatik.com | www.hymatik.com | Hvidkaervej 27a, DK-5250 Odense SV, Denmark

Behavior Control

The regulation speed of the pressure regulator can be modified by means of one parameter. (P 20)
The value in this parameter has a range from 0-5. A higher value indicates slower regulation speed, but will be more stable.

Parameter Number 20 – Set Behavior Control

Step	1	2	3	4	5	
Press	acc 3-6 seconds	▼ or ▲	acc	▼ or ▲	acc	
Until Display Reads	Pxx	P20	003.	###. Flashing Decimal (value between 0 and 5)	### Flashing	P21
Description	Accesses changeable parameters.	Accesses parameter no. 20.	Displays current parameter value.	Edits parameter 0 = custom set* 1 = fastest (narrow proportional band) 2 = fast 3 = normal 4 = slow 5 = slowest (proportional band is broad)	Accepts and saves new parameter setting.	Sequences to next parameter.

* When the value 0 is entered, you are able to create your own custom settings true parameters 12, 13 and 21.

Fine Settings
Set Proportional Band

Proportional band is used for setting the reaction sensitivity of the regulator. The displayed value is X 10 mbar and has a range between 50 (0.5 bar) and 250 (2.5 bar).

Parameter Number 12 – Set Proportional Band (P20 Must be Set to 0)

Step	1	2	3	4	5	
Press	acc 3-6 seconds	▼ or ▲	acc	▼ or ▲	acc	
Until Display Reads	Pxx	P12	100. Flashing Decimal	###. Flashing Decimal (value between 50 and 250)	### Flashing	P13
Description	Accesses changeable parameters.	Accesses parameter no. 12.	Displays current parameter value. Incremental value is: x 10 mbar	Edits parameter.	Accepts and saves new parameter setting.	Sequences to next parameter.

How to Videos at www.parker.com/pneu/propreg

For inventory, lead times, and kit lookup, visit www.pdnplu.com

Parker Hannifin Corporation
Pneumatic Division
Richland, Michigan
www.parker.com/pneumatics

Tel: +45 63 12 83 00 | Email: ps@hymatik.com | www.hymatik.com | Hvidkaervej 27a, DK-5250 Odense SV, Denmark

Set Deadband

Deadband is the Minimum limit of accuracy at which the regulator is set for normal operation. The displayed value is X 10 mbar and has a range between 4 (40 mbar) and 40 (400 mbar).

Parameter Number 13 – Set Deadband (P20 Must be Set to 0)

Step	1	2	3	4	5	
Press	acc 3-6 seconds	▼ or ▲	acc	▼ or ▲	acc	
Until Display Reads	Pxx	P 13	0 15. Flashing Decimal	# # #. Flashing Decimal (value between 4 and 40)	# # # Flashing	P 14
Description	Accesses changeable parameters.	Accesses parameter no. 13.	Displays current parameter value. Incremental value is x 10 mbar	Edits parameter.	Accepts and saves new parameter setting.	Sequences to next parameter.

Proportional Effect

Parameter Number 21 – Set Proportional Effect (P20 Must be Set to 0)

Step	1	2	3	4	5	
Press	acc 3-6 seconds	▼ or ▲	acc	▼ or ▲	acc	
Until Display Reads	Pxx	P21	0 10. Flashing Decimal	# # #. Flashing Decimal (value between 5 and 100)	# # # Flashing	P22
Description	Accesses changeable parameters.	Accesses parameter no. 21.	Displays current parameter value.	Edits parameter. 5 = fastest regulation 100 = slowest regulation.	Accepts and saves new parameter setting.	Sequences to next parameter.

Parameter Number 39 – Displays Current Software Version

Step	1	2	3
Press	acc 3-6 seconds	▼ or ▲	acc
Until Display Reads	Pxx	P39	# # # Flashing Decimal
Description	Accesses changeable parameters.	Accesses parameter no. 39.	Displays current parameter value. XXX = current software version

How to Videos at www.parker.com/pneu/propreg

For inventory, lead times, and kit lookup, visit www.pdnplu.com

Parker Hannifin Corporation
Pneumatic Division
Richland, Michigan
www.parker.com/pneumatics

P31P

Dimensions inches (mm)

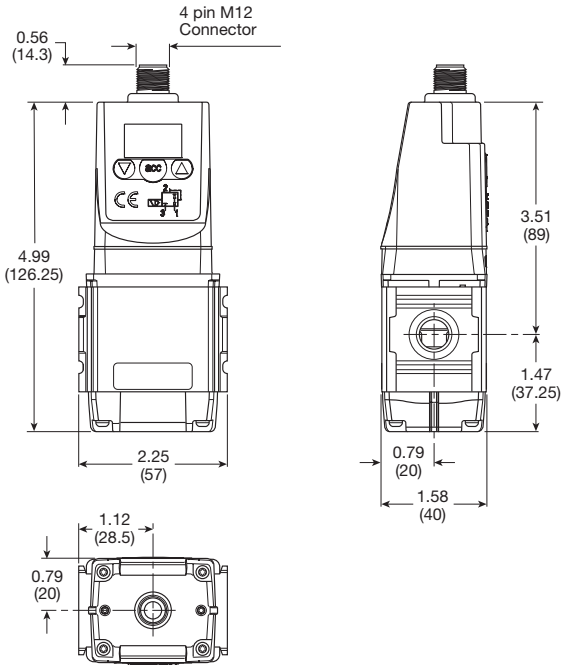

L-Bracket

P3HKA00ML

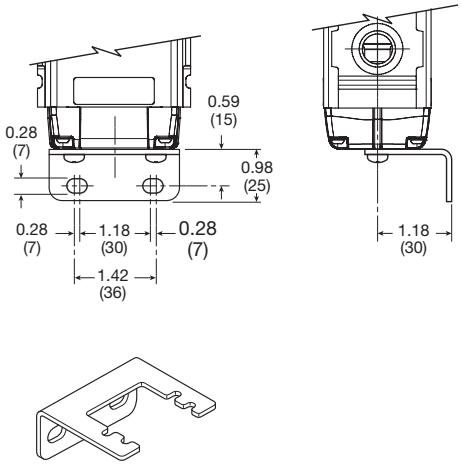

Foot Bracket

P3HKA00MC

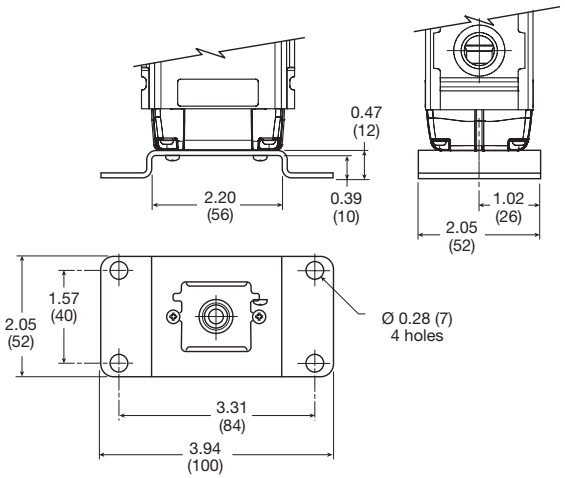

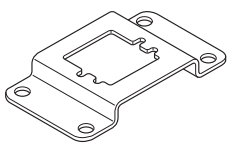

Cables

Description	Part Number
2 mtr. cable with moulded straight M12x1 connector	**CB-M12-4P-2M**

Most popular.

For inventory, lead times, and kit lookup, visit www.pdnplu.com

Parker Hannifin Corporation
Pneumatic Division
Richland, Michigan
www.parker.com/pneumatics

Tel: +45 63 12 83 00 | Email: ps@hymatik.com | www.hymatik.com | Hvidkaervej 27a, DK-5250 Odense SV, Denmark

P32P
Dimensions inches (mm)

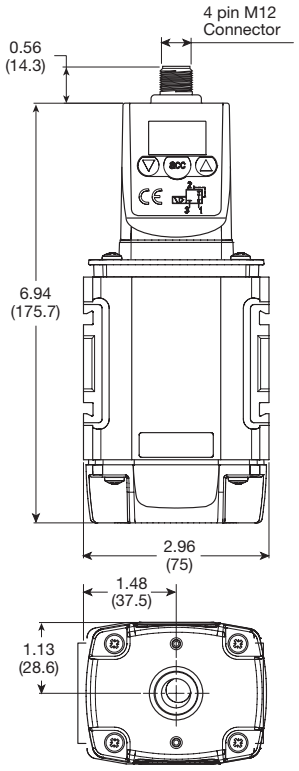

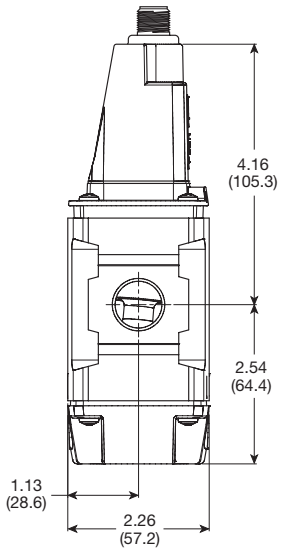

L-Bracket
P3KKA00ML

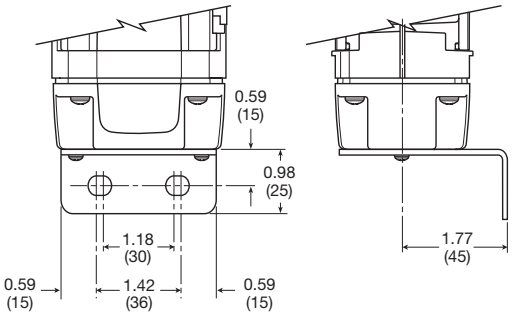

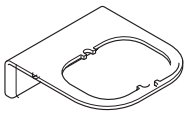

Foot Bracket
P3KKA00MC

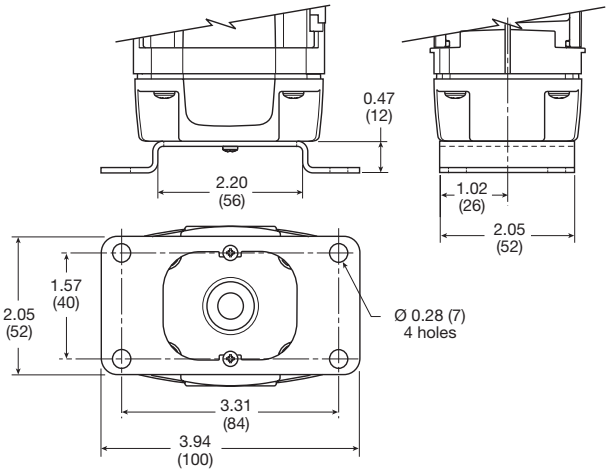

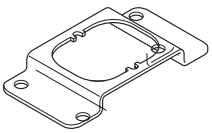

Cables

Description	Part Number
2 mtr. cable with moulded straight M12x1 connector	**CB-M12-4P-2M**

Most popular.

For inventory, lead times, and kit lookup, visit www.pdnplu.com

Parker Hannifin Corporation
Pneumatic Division
Richland, Michigan
www.parker.com/pneumatics

Tel: +45 63 12 83 00 | Email: ps@hymatik.com | www.hymatik.com | Hvidkaervej 27a, DK-5250 Odense SV, Denmark

P31 Filter / Regulators – Mini

- Integral 1/4" ports (NPT, BSPP & BSPT)
- High efficiency 5 micron element as standard
- Excellent water removal efficiency
- Robust but lightweight aluminum construction
- Positive bayonet latch to ensure correct & safe fitting
- Secondary pressure ranges
- Secondary aspiration plus balanced poppet provides quick response and accurate pressure regulation



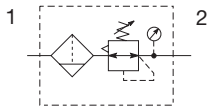

Port Size	Description (Relieving)	Bowl / Drain Type ‡	Part Number
1/4"	125 psig (8 bar)	Poly / Manual	**P31EB92EGMBN5P**
1/4"	125 psig (8 bar)	Poly / Pulse	**P31EB92EGBBN5P**
1/4"	125 psig (8 bar)	Metal / Manual	**P31EB92EMMBN5P**
1/4"	125 psig (8 bar)	Metal / Pulse	**P31EB92EMBBN5P**

‡ For polycarbonate bowl, see caution in Engineering Section A.

Operating information

Flow capacity*: 1/4	73 scfm (35 dm³/s, ANR)
Operating temperature‡:	
Plastic bowl	14°F to 125°F (-10°C to 52°C)
Metal bowl	14°F to 150°F (-10°C to 65.5°C)
Supply pressure (max):	
Plastic bowl	150 psig (10 bar)
Metal bowl	250 psig (17 bar)
Standard filtration	5 micron
Useful retention†:	0.4 US oz. (12 cm³)
Adjusting range pressure:	0 to 30 psig (0 to 2 bar) 0 to 60 psig (0 to 4 bar) 0 to 125 psig (0 to 8 bar) 0 to 250 psig (0 to 17 bar)
Gauge port (2 each)**:	1/8 NPT, BSPP, BSPT
Weight:	0.42 lb (0.19 kg)

* Inlet pressure 145 psig (10 bar). Secondary pressure 91.3 psig (6.3 bar) and 14.5 psig (1 bar) pressure drop.
** Non-gauge option only.
‡ Units with square gauges: 5°F to 150°F (-15°C to 65.5°C)
† Useful retention refers to volume below the quiet zone baffle.

Air quality: Within ISO 8573-1: 1991 Class 3 (Particulates)
Within ISO 8573-1: 2001 Class 6 (Particulates)

Ordering Information:

P31EB | 9 | 2 | E | G | M | B | N | 5 | P

Basic Series
Global Modular Mini Filter / Regulator — P31EB

Thread Type
BSPP — 1
BSPT — 2
NPT — 9

Port Size
1/4 — 2

Element
5µ Element — E

Bowl Type
Poly Bowl with Bowl Guard — G
Metal Bowl without Sight Gauge — M

Drain Type
Pulse Drain — B
Manual Drain — M
Flex Drain — X

Relief
B — Relieving
N — Non-Relieving

Adjustment
N — Non-Rising Knob

Mounting
P — Plastic Panel Mount Nut

Adjustment Range

With Square Gauge		With Round Gauge	
psig	Bar		
1 = 30*	V = 2*	Z	30 psig; 2 Bar; 0.2 MPa
3 = 60	S = 4	M	60 psig; 4 Bar; 0.4 MPa
5 = 125	T = 8	G	125 psig; 8 Bar; 0.8 MPa
		J§	232 psig; 16 Bar; 1.6 MPa
		Without Gauge	
		Y	30 psig; 2 Bar; 0.2 MPa
		L	60 psig; 4 Bar; 0.4 MPa
		N	125 psig; 8 Bar; 0.8 MPa
		H§	232 psig; 16 Bar; 1.6 MPa

* Regulator comes with gauge respective to the adjustment range selected.
§ Not available with poly bowl with bowl guard.

☐ Most popular.

For inventory, lead times, and kit lookup, visit www.pdnplu.com

Parker Hannifin Corporation
Pneumatic Division
Richland, Michigan
www.parker.com/pneumatics

Tel: +45 63 12 83 00 | Email: ps@hymatik.com | www.hymatik.com | Hvidkaervej 27a, DK-5250 Odense SV, Denmark

Material Specifications

Body	Aluminum
Adjustment knob	Acetal
Body cap	ABS
Bonnet	PBT
Plastic bowl	Polycarbonate
Metal bowl	Aluminum
Bowl guard	Nylon
Filter element	Polyethylene
Seals	Nitrile
Springs	Steel
Valve assembly	Brass / Nitrile
Diaphragm assembly	Brass / Nitrile
Panel nut	Acetal

⚠ WARNING

Product rupture can cause serious injury.
Do not connect regulator to bottled gas.
Do not exceed Maximum primary pressure rating.

CAUTION:

REGULATOR PRESSURE ADJUSTMENT – The working range of knob adjustment is designed to permit outlet pressures within their full range. Pressure adjustment beyond this range is also possible because the knob is not a limiting device. This is a common characteristic of most industrial regulators, and limiting devices may be obtained only by special design. For best performance, regulated pressure should always be set by increasing the pressure up to the desired setting.

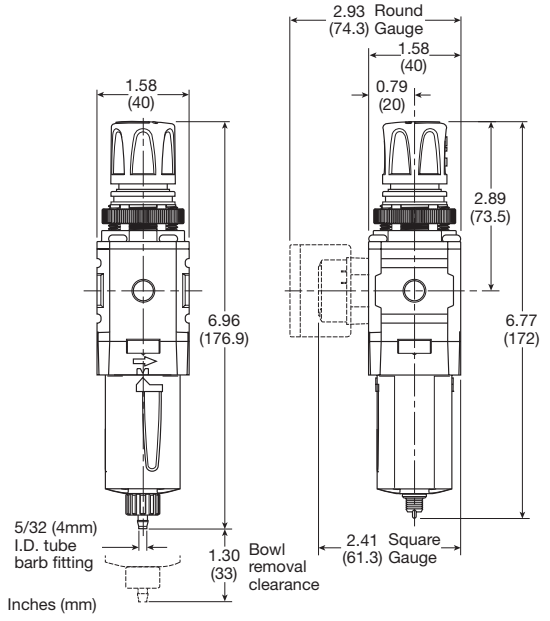

Manual Drain **Pulse Drain**

Flow Charts

P31EB 1/4" Filter / Regulator

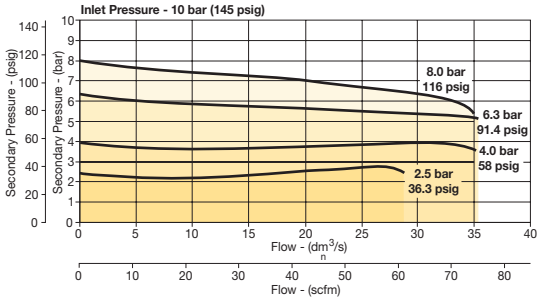

Repair and Service Kits

Plastic bowl / bowl guard manual drain	**P31KB00BGM**
Plastic bowl / bowl guard pulse drain	**P31KB00BGB**
Metal bowl / w/o sight gauge pulse drain	**P31KB00BMB**
5µ particle filter element	**P31KA00ESE**
Diaphragm repair kit - relieving	**P31KB00RB**
Diaphragm repair kit - non-relieving	**P31KB00RC**
Panel mount nut - aluminum	**P31KA00MM**
Panel mount nut - plastic	**P31KA00MP**
Angle bracket (attaches via panel nut)	**P31KB00MR**
C-bracket (fits to body)	**P31KA00MW**
T-bracket with body connector	**P31KA00MT**
Body connector	**P31KA00CB**

Gauges

Square flush mount gauge	0-4 bar	**K4511SCR04B**
	0-11 bar	**K4511SCR11B**
	0-60 psig	**K4511SCR060**
	0-160 psig	**K4511SCR160**

For best performance, regulated pressure should always be set by increasing the pressure up to the desired setting.

Tel: +45 63 12 83 00 | Email: ps@hymatik.com | www.hymatik.com | Hvidkaervej 27a, DK-5250 Odense SV, Denmark

P32 Filter / Regulators – Compact

- Integral 1/4", 3/8" or 1/2" ports (NPT, BSPP & BSPT)
- High efficiency 5 micron element as standard
- Excellent water removal efficiency
- Robust but lightweight aluminum construction
- Positive bayonet latch to ensure correct & safe fitting
- Secondary pressure ranges
- Secondary aspiration plus balanced poppet provides quick response and accurate pressure regulation

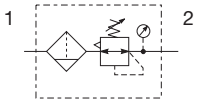



Port Size	Description (Relieving)	Bowl / Drain Type ‡	Part Number
1/4"	125 psig (8 bar)	Poly / Manual	**P32EB92EGMBNGP**
1/4"	125 psig (8 bar)	Poly / Auto	**P32EB92EGABNGP**
1/4"	125 psig (8 bar)	Metal / Manual	**P32EB92ESMBNGP**
1/4"	125 psig (8 bar)	Metal / Auto	**P32EB92ESABNGP**
3/8"	125 psig (8 bar)	Poly / Manual	**P32EB93EGMBNGP**
3/8"	125 psig (8 bar)	Poly / Auto	**P32EB93EGABNGP**
3/8"	125 psig (8 bar)	Metal / Manual	**P32EB93ESMBNGP**
3/8"	125 psig (8 bar)	Metal / Auto	**P32EB93ESABNGP**
1/2"	125 psig (8 bar)	Poly / Manual	**P32EB94EGMBNGP**
1/2"	125 psig (8 bar)	Poly / Auto	**P32EB94EGABNGP**
1/2"	125 psig (8 bar)	Metal / Manual	**P32EB94ESMBNGP**
1/2"	125 psig (8 bar)	Metal / Auto	**P32EB94ESABNGP**

‡ For polycarbonate bowl, see caution in Engineering Section A.

Operating information

Flow capacity*:	1/4	148 scfm (70 dm3/s, ANR)
	3/8	158 scfm (75 dm3/s, ANR)
	1/2	164 scfm (77 dm3/s, ANR)
Operating temperature:		
Plastic bowl		-13°F to 125°F (-25°C to 52°C)
Metal bowl		-13°F to 150°F (-25°C to 65.5°C)
Supply pressure (max):		
Plastic bowl		150 psig (10 bar)
Metal bowl		250 psig (17 bar)
Standard filtration:		5 micron
Useful retention†:		1.7 US oz. (51 cm^3)
Adjusting range pressure:		0 to 30 psig (0 to 2 bar) 0 to 60 psig (0 to 4 bar) 0 to 125 psig (0 to 8 bar) 0 to 250 psig (0 to 17 bar)
Gauge port (2 each):		1/4 NPT, BSPP, BSPT
Weight:		1.17 lb (0.53 kg)

* Inlet pressure 145 psig (10 bar). Secondary pressure 91.3 psig (6.3 bar) and 14.5 psig (1 bar) pressure drop.
† Useful retention refers to volume below the quiet zone baffle.

Air quality: Within ISO 8573-1: 1991 Class 3 (Particulates)
Within ISO 8573-1: 2001 Class 6 (Particulates)

Ordering Information:

P32EB | 9 | 2 | E | G | M | B | N | 5 | P

Basic Series
Global Modular Compact Filter / Regulator — P32EB

Thread Type

BSPP	1
BSPT	2
NPT	9

Port Size

1/4	2
3/8	3
1/2	4

Element
5µ Element — E

Bowl Type

Poly Bowl with Bowl Guard	G
Metal Bowl without Sight Gauge	M
Metal Bowl with Sight Gauge	S

Drain Type

Manual Drain	M
Auto Drain	A
Flex Drain	X

Relief

B	Relieving
N	Non-Relieving

Adjustment

N	Non-Rising Knob
T	T-Handle

Adjustment Range

With Square Gauge			With Round Gauge	
psig		Bar		
1 = 30*		V = 2*	Z	30 psig; 2 Bar; 0.2 MPa
3 = 60		S = 4	M	60 psig; 4 Bar; 0.4 MPa
5 = 125		T = 8	G	125 psig; 8 Bar; 0.8 MPa
			J§	250 psig; 17 Bar; 1.7 MPa
			Without Gauge	
			Y	30 psig; 2 Bar; 0.2 MPa
			L	60 psig; 4 Bar; 0.4 MPa
			N	125 psig; 8 Bar; 0.8 MPa
			H§	250 psig; 17 Bar; 1.7 MPa

* Regulator comes with gauge respective to the adjustment range selected.
§ Not available with poly bowl with bowl guard.

Mounting

P	Plastic Panel Mount Nut

☐ Most popular.

For inventory, lead times, and kit lookup, visit www.pdnplu.com

Parker Hannifin Corporation
Pneumatic Division
Richland, Michigan
www.parker.com/pneumatics

Tel: +45 63 12 83 00 | Email: ps@hymatik.com | www.hymatik.com | Hvidkaervej 27a, DK-5250 Odense SV, Denmark

Material Specifications

Body	Aluminum
Adjustment knob	Acetal
Element retainer / baffle	Acetal
Plastic bowl	Polycarbonate
Metal bowl	Aluminum
Bowl guard	Nylon
Filter element	Sintered polyethylene
Seals	Nitrile
Springs	Steel, stainless steel
Valve assembly	Brass / nitrile
Diaphragm assembly	Nitrile / zinc
Panel nut	Acetal
Sight gauge	Nylon

Repair and Service Kits

Plastic bowl / bowl guard manual drain	**P32KB00BGM**
Metal bowl / sight gauge manual drain	**P32KB00BSM**
Auto drain	**P32KA00DA**
5µ particle filter element	**P32KA00ESE**
Diaphragm repair kit - relieving	**P32KB00RB**
Diaphragm repair kit - non-relieving	**P32KB00RC**
Panel mount nut - aluminum	**P32KA00MM**
Panel mount nut - plastic	**P32KA00MP**
Angle bracket (fits to panel mount threads)	**P32KB00MR**
T-bracket (fits to body connector)	**P32KA00MB**
T-bracket with body connector	**P32KA00MT**
Body connector	**P32KA00CB**

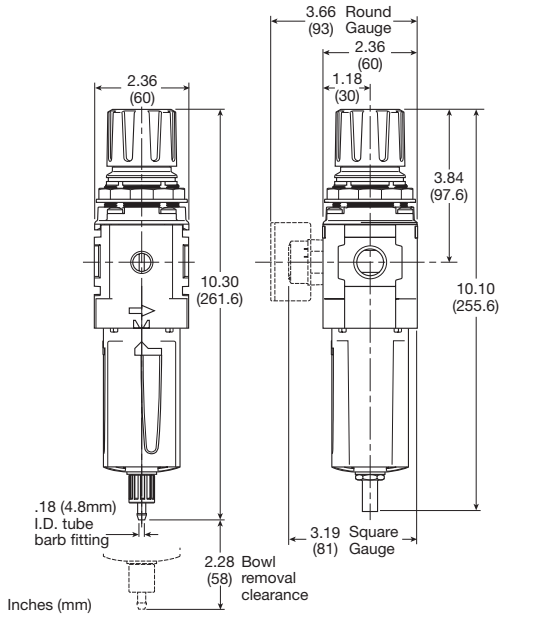

Manual Drain **Automatic Drain**

Flow Charts

P32EB 1/4" Filter / Regulator

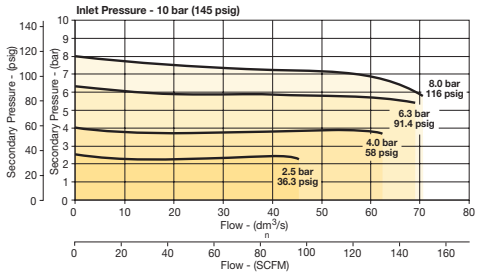

P32EB3/8" Filter/Regulator

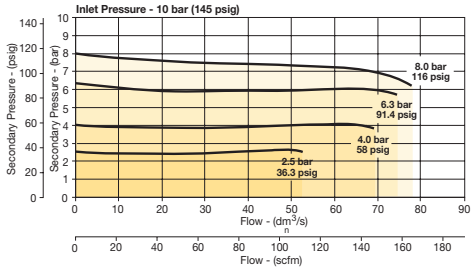

P32EB 1/2" Filter/Regulator

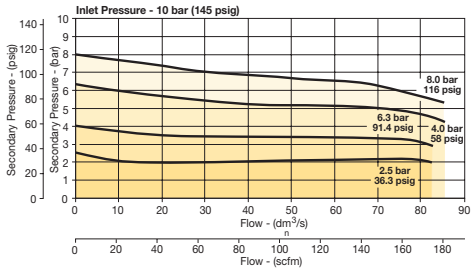

⚠ WARNING

Product rupture can cause serious injury.
Do not connect regulator to bottled gas.
Do not exceed Maximum primary pressure rating.

CAUTION:

REGULATOR PRESSURE ADJUSTMENT – The working range of knob adjustment is designed to permit outlet pressures within their full range. Pressure adjustment beyond this range is also possible because the knob is not a limiting device. This is a common characteristic of most industrial regulators, and limiting devices may be obtained only by special design. For best performance, regulated pressure should always be set by increasing the pressure up to the desired setting.

Gauges

50mm (2") round 1/4" center back mount	0-30 psig / 0-2 bar	**K4520N14030**
	0-60 psig / 0-4 bar	**K4520N14060**
	0-160 psig / 0-11 bar	**K4520N14160**
	0-300 psig / 0-20 bar	**K4520N14300**

For best performance, regulated pressure should always be set by increasing the pressure up to the desired setting.

Tel: +45 63 12 83 00 | Email: ps@hymatik.com | www.hymatik.com | Hvidkaervej 27a, DK-5250 Odense SV, Denmark

P32 Semi-Precision Filter / Regulators – Compact

- Integral 1/4", 3/8" or 1/2" ports (NPT, BSPP & BSPT)
- High efficiency 5 micron element as standard
- Excellent water removal efficiency
- Robust but lightweight aluminum construction
- Positive bayonet latch to ensure correct & safe fitting
- Secondary pressure ranges
- Secondary aspiration plus balanced poppet provides quick response and accurate pressure regulation



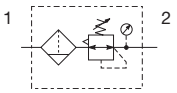

Port Size	Description / Relieving	Bowl / Drain Type ‡	Part Number
1/4"	125 psig (8 bar)	Poly / Manual	P32EB92EGMPNGP
1/4"	125 psig (8 bar)	Poly / Auto	P32EB92EGAPNGP
1/4"	125 psig (8 bar)	Metal / Manual	P32EB92ESMPNGP
1/4"	125 psig (8 bar)	Metal / Auto	P32EB92ESAPNGP
3/8"	125 psig (8 bar)	Poly / Manual	P32EB93EGMPNGP
3/8"	125 psig (8 bar)	Poly / Auto	P32EB93EGAPNGP
3/8"	125 psig (8 bar)	Metal / Manual	P32EB93ESMPNGP
3/8"	125 psig (8 bar)	Metal / Auto	P32EB93ESAPNGP
1/2"	125 psig (8 bar)	Poly / Manual	P32EB94EGMPNGP
1/2"	125 psig (8 bar)	Poly / Auto	P32EB94EGAPNGP
1/2"	125 psig (8 bar)	Metal / Manual	P32EB94ESMPNGP
1/2"	125 psig (8 bar)	Metal / Auto	P32EB94ESAPNGP

‡ For polycarbonate bowl, see caution in Engineering Section A.

Operating information

Flow capacity*: 1/4, 3/8, 1/2	75 scfm (35 dm³/s, ANR)
Effect of supply pressure variation	0.6 psig (0.04 bar) for 25 psig (1.7 bar) change in P1
Operating temperature:	
Plastic bowl	-13°F to 125°F (-25°C to 52°C)
Metal bowl	-13°F to 150°F (-25°C to 65.5°C)
Supply pressure (max):	
Plastic bowl	150 psig (10 bar)
Metal bowl	250 psig (17 bar)
Standard filtration:	5 micron
Useful retention†:	1.7 US oz. (51 cm³)
Adjusting range pressure:	0 to 30 psig (0 to 2 bar) 0 to 60 psig (0 to 4 bar) 0 to 125 psig (0 to 8 bar) 0 to 250 psig (0 to 17 bar)
Gauge port (2 each):	1/4 NPT, BSPP, BSPT
Weight:	1.17 lbs (0.53 kg)

* Inlet pressure 145 psig (10 bar). Secondary pressure 91.3 psig (6.3 bar) and 14.5 psig (1 bar) pressure drop.
† Useful retention refers to volume below the quiet zone baffle.

Air quality: Within ISO 8573-1: 1991 Class 3 (Particulates)
Within ISO 8573-1: 2001 Class 6 (Particulates)

Ordering Information:

P32EB 9 2 E G M P N G P

Basic Series
Global Modular Compact Filter / Regulator — P32EB

Thread Type
BSPP 1
BSPT 2
NPT 9

Port Size
1/4 2
3/8 3
1/2 4

Element
5µ Element E

Bowl Type
Poly Bowl with Bowl Guard G
Metal Bowl without Sight Gauge M
Metal Bowl with Sight Gauge S

Drain Type
Manual Drain M
Auto Drain A

Relief
P Semi-Precision Relieving
T Semi-Precision Non-Relieving

Adjustment
N Non-Rising Knob
T T-Handle

Adjustment Range

With Square Gauge				With Round Gauge	
psig		Bar			
1 = 30*		V = 2*		Z	30 psig; 2 Bar; 0.2 MPa
3 = 60		S = 4		M	60 psig; 4 Bar; 0.4 MPa
5 = 125		T = 8		G	125 psig; 8 Bar; 0.8 MPa
				J§	250 psig; 17 Bar; 1.7 MPa
				Without Gauge	
				Y	30 psig; 2 Bar; 0.2 MPa
				L	60 psig; 4 Bar; 0.4 MPa
				N	125 psig; 8 Bar; 0.8 MPa
				H§	250 psig; 17 Bar; 1.7 MPa

* Regulator comes with gauge respective to the adjustment range selected.
§ Not available with poly bowl with bowl guard.

Mounting
P Plastic Panel Mount Nut

☐ Most popular.

For inventory, lead times, and kit lookup, visit www.pdnplu.com

Parker Hannifin Corporation
Pneumatic Division
Richland, Michigan
www.parker.com/pneumatics

Tel: +45 63 12 83 00 | Email: ps@hymatik.com | www.hymatik.com | Hvidkaervej 27a, DK-5250 Odense SV, Denmark

Material Specifications

Body	Aluminum
Adjustment knob	Acetal
Element retainer / baffle	Acetal
Plastic bowl	Polycarbonate
Metal bowl	Aluminum
Bowl guard	Nylon
Filter element	Sintered polyethylene
Seals	Nitrile
Springs	Steel, stainless steel
Valve assembly	Brass / nitrile
Diaphragm assembly	Nitrile / zinc
Panel nut	Acetal
Sight gauge	Nylon

Repair and Service Kits

Plastic bowl / bowl guard manual drain	**P32KB00BGM**
Metal bowl / sight gauge manual drain	**P32KB00BSM**
Auto drain	**P32KA00DA**
5µ particle filter element	**P32KA00ESE**
Diaphragm repair kit - relieving	**P32KB00RB**
Diaphragm repair kit - non-relieving	**P32KB00RC**
Panel mount nut - aluminum	**P32KA00MM**
Panel mount nut - plastic	**P32KA00MP**
Angle bracket (fits to panel mount threads)	**P32KB00MR**
T-bracket (fits to body connector)	**P32KA00MB**
T-bracket with body connector	**P32KA00MT**
Body connector	**P32KA00CB**

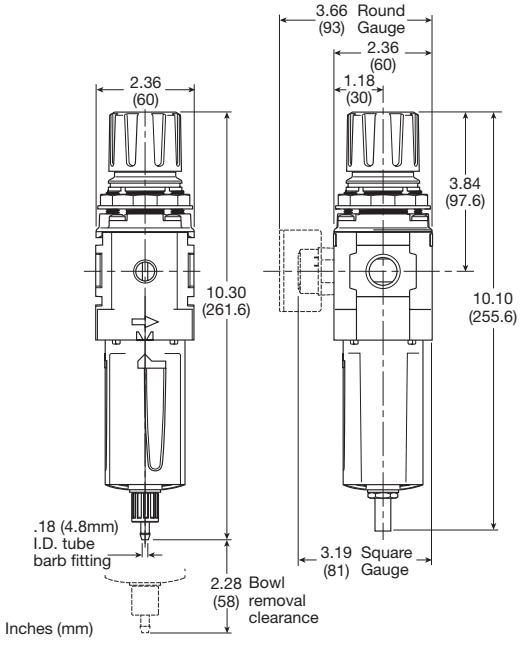

Manual Drain **Automatic Drain**

Flow Charts

P32EB 1/4" Filter / Regulator

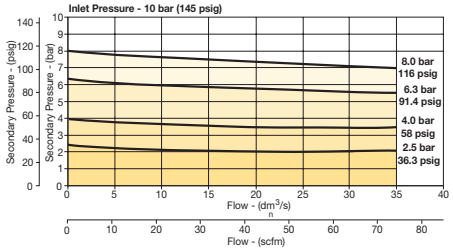

P32EB 3/8" Filter/Regulator

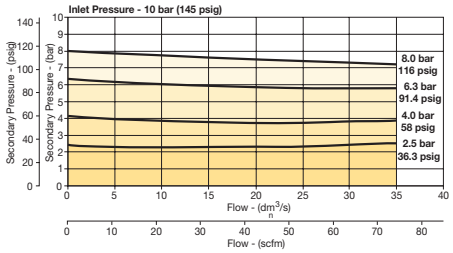

P32EB 1/2" Filter/Regulator

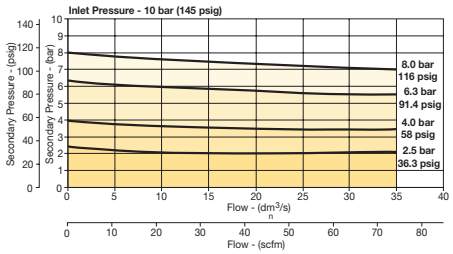

⚠ WARNING

Product rupture can cause serious injury.
Do not connect regulator to bottled gas.
Do not exceed Maximum primary pressure rating.

CAUTION:

REGULATOR PRESSURE ADJUSTMENT – The working range of knob adjustment is designed to permit outlet pressures within their full range. Pressure adjustment beyond this range is also possible because the knob is not a limiting device. This is a common characteristic of most industrial regulators, and limiting devices may be obtained only by special design. For best performance, regulated pressure should always be set by increasing the pressure up to the desired setting.

Gauges

50mm (2") round 1/4" center back mount	0-30 psig / 0-2 bar	**K4520N14030**
	0-60 psig / 0-4 bar	**K4520N14060**
	0-160 psig / 0-11 bar	**K4520N14160**
	0-300 psig / 0-20 bar	**K4520N14300**

For best performance, regulated pressure should always be set by increasing the pressure up to the desired setting.

For inventory, lead times, and kit lookup, visit www.pdnplu.com

Parker Hannifin Corporation
Pneumatic Division
Richland, Michigan
www.parker.com/pneumatics

Tel: +45 63 12 83 00 | Email: ps@hymatik.com | www.hymatik.com | Hvidkaervej 27a, DK-5250 Odense SV, Denmark

P33 Filter / Regulators – Standard

- Integral 1/2" or 3/4" ports (NPT, BSPP & BSPT)
- High efficiency 5 micron element as standard
- Excellent water removal efficiency
- Robust but lightweight aluminum construction
- Positive bayonet latch to ensure correct & safe fitting
- Secondary pressure ranges
- Secondary aspiration plus balanced poppet provides quick response and accurate pressure regulation



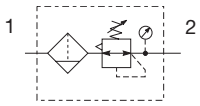

Port Size	Description / Relieving	Bowl / Drain Type ‡	Part Number
1/2"	125 psig (8 bar)	Poly / Manual	**P33EA94EGMBNGP**
1/2"	125 psig (8 bar)	Poly / Auto	**P33EA94EGABNGP**
1/2"	125 psig (8 bar)	Metal / Manual	**P33EA94ESMBNGP**
1/2"	125 psig (8 bar)	Metal / Auto	**P33EA94ESABNGP**
3/4"	125 psig (8 bar)	Poly / Manual	**P33EA96EGMBNGP**
3/4"	125 psig (8 bar)	Poly / Auto	**P33EA96EGABNGP**
3/4"	125 psig (8 bar)	Metal / Manual	**P33EA96ESMBNGP**
3/4"	125 psig (8 bar)	Metal / Auto	**P33EA96ESABNGP**

‡ For polycarbonate bowl, see caution in Engineering Section A.

Operating information

Flow capacity*:	1/2	200 scfm (94 dm³/s, ANR)
	3/4	235 scfm (109 dm³/s, ANR)
Operating temperature:		
Plastic bowl		-13°F to 125°F (-25°C to 52°C)
Metal bowl		-13°F to 150°F (-25°C to 65.5°C)
Supply pressure (max):		
Plastic bowl		150 psig (10 bar)
Metal bowl		250 psig (17 bar)
Standard filtration:		5 micron
Useful retention†:		2.8 US oz. (85 cm³)
Adjusting range pressure:		0 to 30 psig (0 to 2 bar) 0 to 60 psig (0 to 4 bar) 0 to 125 psig (0 to 8 bar) 0 to 250 psig (0 to 17 bar)
Gauge port (2 each):		1/4 NPT, BSPP, BSPT
Weight:		1.87 lbs (0.85 kg)

* Inlet pressure 145 psig (10 bar). Secondary pressure 91.3 psig (6.3 bar) and 14.5 psig (1 bar) pressure drop.
† Useful retention refers to volume below the quiet zone baffle.

Air quality: Within ISO 8573-1: 1991 Class 3 (Particulates)
Within ISO 8573-1: 2001 Class 6 (Particulates)

Ordering Information:

P33EA 9 6 E G M B N G P

Basic Series
Global Modular Standard Filter / Regulator — P33EA

Thread Type
BSPP 1
BSPT 2
NPT 9

Port Size
1/2 4
3/4 6

Element
5µ Element E

Bowl Type
Poly Bowl with Bowl Guard G
Metal Bowl without Sight Gauge M
Metal Bowl with Sight Gauge S

Drain Type
M Manual Drain
A Auto Drain

Relief
B Relieving
N Non-Relieving

Adjustment
N Non-Rising Knob

Mounting
P Plastic Panel Mount Nut

Adjustment Range

	With Round Gauge
Z	30 psig; 2 Bar; 0.2 MPa
M	60 psig; 4 Bar; 0.4 MPa
G	125 psig; 8 Bar; 0.8 MPa
J§	250 psig; 17 Bar; 1.7 MPa
	Without Gauge
Y	30 psig; 2 Bar; 0.2 MPa
L	60 psig; 4 Bar; 0.4 MPa
N	125 psig; 8 Bar; 0.8 MPa
H§	250 psig; 17 Bar; 1.7 MPa

§ Not available with poly bowl with bowl guard.

☐ Most popular.

For inventory, lead times, and kit lookup, visit www.pdnplu.com

Parker Hannifin Corporation
Pneumatic Division
Richland, Michigan
www.parker.com/pneumatics

Tel: +45 63 12 83 00 | Email: ps@hymatik.com | www.hymatik.com | Hvidkaervej 27a, DK-5250 Odense SV, Denmark

Material Specifications

Body	Aluminum
Adjustment knob	Acetal
Body cap	ABS
Element retainer / baffle	Acetal
Plastic bowl	Polycarbonate
Metal bowl	Aluminum
Filter element	Sintered Polyethylene
Seals	Nitrile
Springs	Steel, stainless steel
Valve assembly	Brass / nitrile
Diaphragm assembly	Nitrile / zinc
Panel nut	Acetal
Sight gauge	Nylon

Repair and Service Kits

Plastic bowl / bowl guard, manual drain	**P33KA00BGM**
Metal bowl / sight gauge, manual drain	**P33KA00BSM**
Auto drain	**P32KA00DA**
5µ particle filter element	**P33KA00ESE**
Diaphragm repair kit - Relieving	**P33KA00RB**
Diaphragm repair kit - Non-relieving	**P33KA00RC**
Panel mount nut - Aluminum	**P33KA00MM**
Panel mount nut - Plastic	**P33KA00MP**
Angle bracket (fits to panel mount threads)	**P33KA00MR**
T-bracket (fits to body connector)	**P32KA00MB**
T-bracket with body connector	**P32KA00MT**
Body connector	**P32KA00CB**

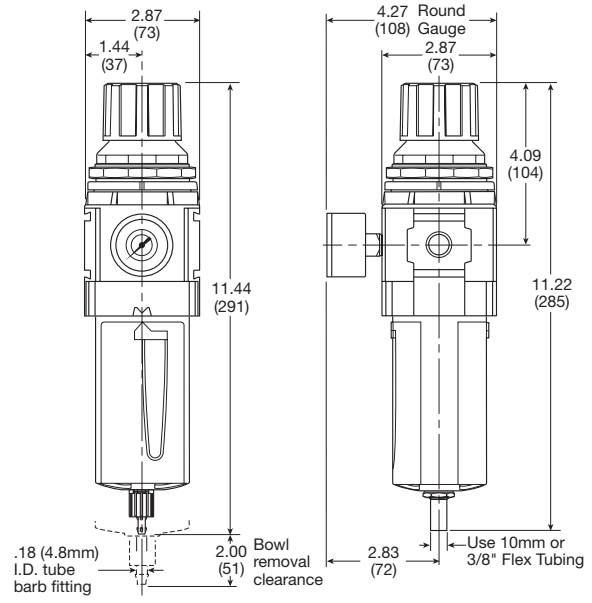

Manual Drain **Automatic Drain**

Flow Charts

P33EA 1/2" Filter / Regulator

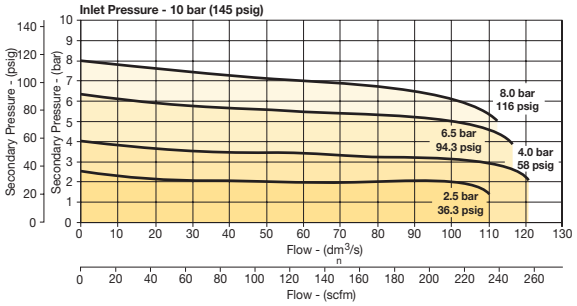

P33EA 3/4" Filter/Regulator

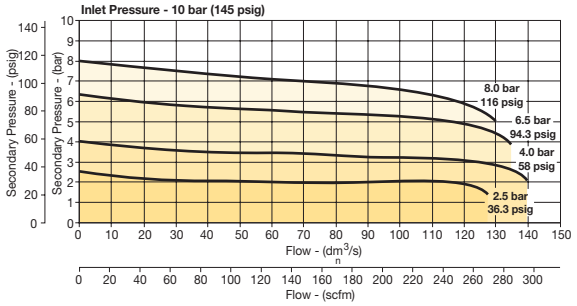

⚠ WARNING

Product rupture can cause serious injury.
Do not connect regulator to bottled gas.
Do not exceed Maximum primary pressure rating.

CAUTION:

REGULATOR PRESSURE ADJUSTMENT – The working range of knob adjustment is designed to permit outlet pressures within their full range. Pressure adjustment beyond this range is also possible because the knob is not a limiting device. This is a common characteristic of most industrial regulators, and limiting devices may be obtained only by special design. For best performance, regulated pressure should always be set by increasing the pressure up to the desired setting.

Gauges

50mm (2") round 1/4" center back mount	0-30 psig / 0-2 bar	**K4520N14030**
	0-60 psig / 0-4 bar	**K4520N14060**
	0-160 psig / 0-11 bar	**K4520N14160**
	0-300 psig / 0-20 bar	**K4520N14300**

For best performance, regulated pressure should always be set by increasing the pressure up to the desired setting.

For inventory, lead times, and kit lookup, visit www.pdnplu.com

Parker Hannifin Corporation
Pneumatic Division
Richland, Michigan
www.parker.com/pneumatics

Tel: +45 63 12 83 00 | Email: ps@hymatik.com | www.hymatik.com | Hvidkaervej 27a, DK-5250 Odense SV, Denmark

P31 Lubricators – Mini

- Integral 1/4" ports (NPT, BSPP & BSPT)
- Robust but lightweight aluminum construction
- Proportional oil delivery over a wide range of air flows
- Finger tip ratchet control for precise oil drip rate adjustment

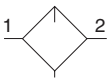

Lubricator with drain



Operating information

Flow capacity*:	
1/4	52 scfm (25 dm³/s, ANR)
Operating temperature:	
Plastic bowl	14°F to 125°F (-10°C to 52°C)
Metal bowl	14°F to 150°F (-10°C to 65.5°C)
Supply pressure (max):	
Plastic bowl	150 psig (10 bar)
Metal bowl	250 psig (17 bar)
Bowl capacity:	0.6 US oz. (18 cm³)
Weight:	0.29 lb (0.13 kg)

* Inlet pressure 91.3 psig (6.3 bar). Pressure drop 4.9 psig (0.34 bar).

Port Size	Description ‡	Part Number
1/4"	Poly Bowl - No Drain	**P31LB92LGNN**
1/4"	Metal Bowl - No Drain	**P31LB92LMNN**

‡ For polycarbonate bowl, see caution in Engineering Section A.

Ordering Information:

P31LB 9 2 L G N N

Basic Series
Global Modular Mini Lubricator — P31LB

Thread Type
BSPP 1
BSPT 2
NPT 9

Port Size
1/4 2

Lube Type
Oil Mist Standard Sight Dome L

Bowl Type
G Poly Bowl with Bowl Guard
M Metal Bowl without Sight Gauge

Drain Type
N No Drain Closed End

Mounting
N No Bracket

Suggested Lubricant .....**F442 Oil**
Petroleum based oil of 100 to 200 SUS viscosity at 100°F (38°C) and an aniline point greater than 200°F (93°C)
(DO NOT USE OILS WITH ADDITIVES, COMPOUNDED OILS CONTAINING SOLVENTS, GRAPHITE, DETERGENTS, OR SYNTHETIC OILS.)

☐ Most popular.

For inventory, lead times, and kit lookup, visit www.pdnplu.com

Parker Hannifin Corporation
Pneumatic Division
Richland, Michigan
www.parker.com/pneumatics

Tel: +45 63 12 83 00 | Email: ps@hymatik.com | www.hymatik.com | Hvidkaervej 27a, DK-5250 Odense SV, Denmark

Material Specifications

Body	Aluminum
Body cap	ABS
Plastic bowl	Polycarbonate
Metal bowl	Aluminum
Seals	Nitrile
Sight dome	Polycarbonate
Suggested lubricant	ISO / ASTM VG32
Pick-up filter	Sintered bronze

Repair and Service Kits

Plastic bowl / bowl guard no drain	**P31KB00BGN**
Metal bowl / w/o sight gauge no drain	**P31KB00BMN**
Drip control assembly	**P32KA00PG**
Fill plug	**P31KA00PL**
C-bracket (fits to body)	**P31KA00MW**
T-bracket with body connector	**P31KA00MT**
Body connector	**P31KA00CB**
Oil (1 quart)	**F442001**
Oil (1 gallon)	**F442002**
Oil (12 quart case)	**F442003**
Oil (4 gallon case)	**F442005**

Flow Charts

P31LB 1/4" Lubricator

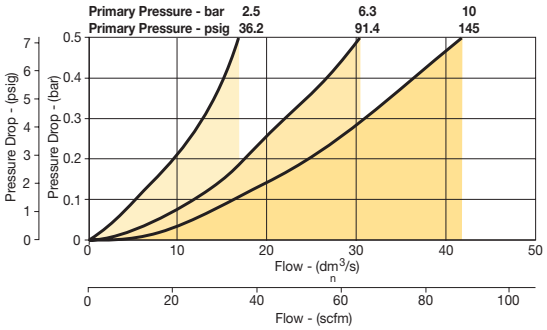

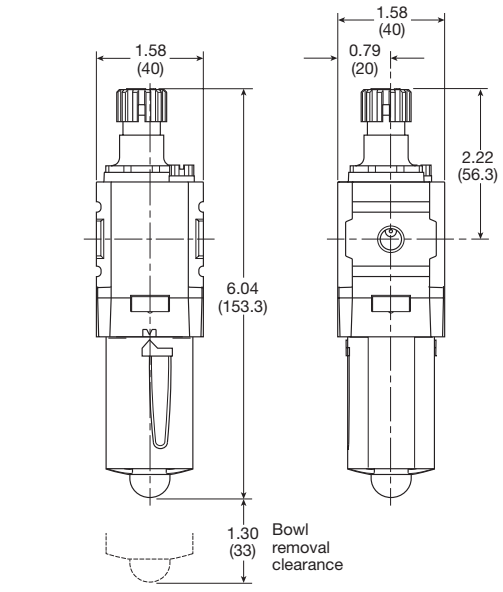

Inches (mm)

For inventory, lead times, and kit lookup, visit www.pdnplu.com

Parker Hannifin Corporation
Pneumatic Division
Richland, Michigan
www.parker.com/pneumatics

Tel: +45 63 12 83 00 | Email: ps@hymatik.com | www.hymatik.com | Hvidkaervej 27a, DK-5250 Odense SV, Denmark

P32 Lubricators – Compact

- Integral 1/4", 3/8" or 1/2" ports (NPT, BSPP & BSPT)
- Robust but lightweight aluminum construction
- Proportional oil delivery over a wide range of air flows
- Finger tip ratchet control for precise oil drip rate adjustment
- Fill from top under system pressure

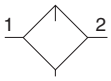

Lubricator with drain



Port Size	Description ‡	Part Number
1/4"	Poly Bowl - No Drain	**P32LB92LGNN**
1/4"	Metal Bowl - No Drain	**P32LB92LSNN**
3/8"	Poly Bowl - No Drain	**P32LB93LGNN**
3/8"	Metal Bowl - No Drain	**P32LB93LSNN**
1/2"	Poly Bowl - No Drain	**P32LB94LGNN**
1/2"	Metal Bowl - No Drain	**P32LB94LSNN**

‡ For polycarbonate bowl, see caution in Engineering Section A.

Operating information

Flow capacity*:	
1/4	38 scfm (17 dm³/s, ANR)
3/8	70 scfm (33 dm³/s, ANR)
1/2	90 scfm (42 dm³/s, ANR)
Operating temperature:	
Plastic bowl	14°F to 125°F (-10°C to 52°C)
Metal bowl	14°F to 150°F (-10°C to 65.5°C)
Supply pressure (max):	
Plastic bowl	150 psig (10 bar)
Metal bowl	250 psig (17 bar)
Bowl capacity:	4.09 US oz. (121 cm³)
Weight:	0.68 lb (0.31 kg)

* Inlet pressure 91.3 psig (6.3 bar). Pressure drop 4.9 psig (0.34 bar).

Ordering Information:

P32LB 9 2 L G N N

Basic Series
Global Modular Compact Lubricator — P32LB

Thread Type
BSPP 1
BSPT 2
NPT 9

Port Size
1/4 2
3/8 3
1/2 4

Lube Type
Oil Mist Standard Sight Dome L

Bowl Type
G Poly Bowl With Bowl Guard
S Metal Bowl With Sight Gauge

Drain Type
N No Drain Closed End

Mounting
N No Bracket

Suggested Lubricant ..... **F442 Oil**
Petroleum based oil of 100 to 200 SUS viscosity at 100°F (38°C) and an aniline point greater than 200°F (93°C)
(DO NOT USE OILS WITH ADDITIVES, COMPOUNDED OILS CONTAINING SOLVENTS, GRAPHITE, DETERGENTS, OR SYNTHETIC OILS.)

☐ Most popular.

For inventory, lead times, and kit lookup, visit www.pdnplu.com

Parker Hannifin Corporation
Pneumatic Division
Richland, Michigan
www.parker.com/pneumatics

Tel: +45 63 12 83 00 | Email: ps@hymatik.com | www.hymatik.com | Hvidkaervej 27a, DK-5250 Odense SV, Denmark

Material Specifications

Body	Aluminum
Body cap	ABS
Plastic bowl	Polycarbonate
Metal bowl	Aluminum
Seals	Nitrile
Sight dome	Polycarbonate
Sight gauge	Nylon
Suggested lubricant	ISO / ASTM VG32
Pick-up filter	Sintered bronze

Repair and Service Kits

Plastic bowl / bowl guard no drain	**P32KB00BGN**
Metal bowl / w/o sight gauge no drain	**P32KB00BMN**
Metal bowl / Sight gauge no drain	**P32KB00BSN**
Drip control assembly	**P32KA00PG**
Fill plug	**P32KA00PL**
L-bracket (fits to body)	**P32KA00ML**
T-bracket (fits to body connector)	**P32KA00MB**
T-bracket with body connector	**P32KA00MT**
Body connector	**P32KA00CB**
Oil (1 quart)	**F442001**
Oil (1 galllon)	**F442002**
Oil (12 quart case)	**F442003**
Oil (4 gallon case)	**F442005**

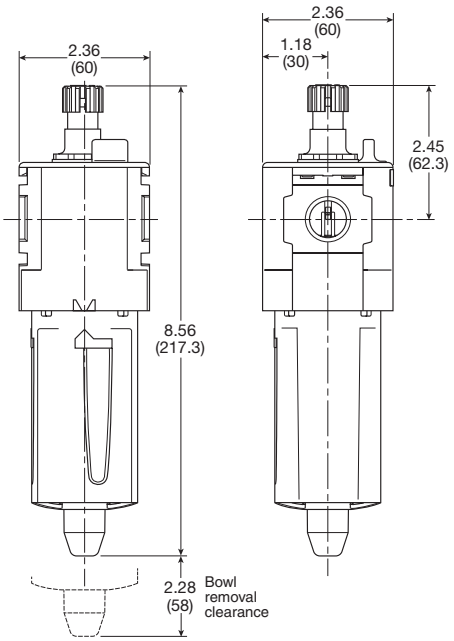

Inches (mm)

Flow Charts

P32LB 1/4" Lubricator

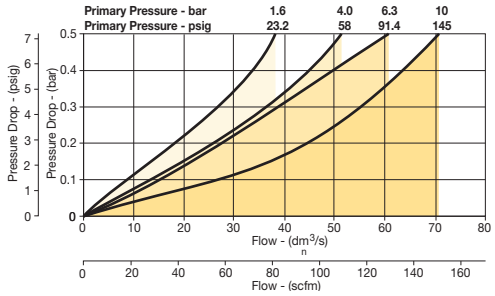

P32LB 3/8" Lubricator

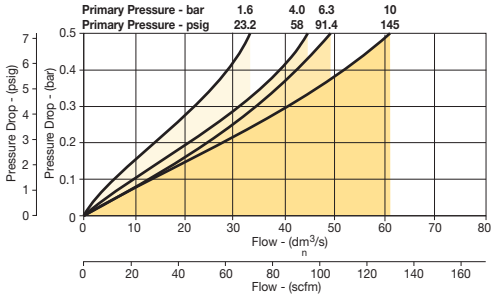

P32LB 1/2" Lubricator

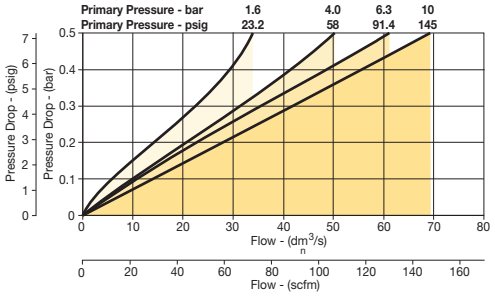

Tel: +45 63 12 83 00 | Email: ps@hymatik.com | www.hymatik.com | Hvidkaervej 27a, DK-5250 Odense SV, Denmark

P33 Lubricators – Standard

- Integral 1/2" or 3/4" ports (NPT, BSPP & BSPT)
- Robust but lightweight aluminum construction
- Proportional oil delivery over a wide range of air flows
- Finger tip ratchet control for precise oil drip rate adjustment
- Fill from top under system pressure

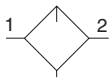

Lubricator with drain



Port Size	Description ‡	Part Number
1/2"	Poly Bowl - No Drain	**P33LA94LGNN**
1/2"	Metal Bowl - No Drain	**P33LA94LSNN**
3/4"	Poly Bowl - No Drain	**P33LA96LGNN**
3/4"	Metal Bowl - No Drain	**P33LA96LSNN**

‡ For polycarbonate bowl, see caution in Engineering Section A.

Operating information

Flow capacity*:	
1/2	110 scfm (52 dm³/s, ANR)
3/4	150 scfm (71 dm³/s, ANR)
Operating temperature:	
Plastic bowl	14°F to 125°F (-10°C to 52°C)
Metal bowl	14°F to 150°F (-10°C to 65.5°C)
Supply pressure (max):	
Plastic bowl	150 psig (10 bar)
Metal bowl	250 psig (17 bar)
Bowl capacity:	6.1 US oz. (181 cm³)
Weight:	1.04 lb (0.47 kg)

* Inlet pressure 91.3 psig (6.3 bar). Pressure drop 4.9 psig (0.34 bar).

Ordering Information:

P33LA 9 6 L G N N

Basic Series
Global Modular Standard Lubricator — P33LA

Thread Type
BSPP 1
BSPT 2
NPT 9

Port Size
1/2 4
3/4 6

Lube Type
Oil Mist Standard Sight Dome L

Bowl Type
G Poly Bowl with Bowl Guard
S Metal Bowl with Sight Gauge

Drain Type
N No Drain Closed End

Mounting
N No Bracket

Suggested Lubricant ..... **F442 Oil**
Petroleum based oil of 100 to 200 SUS viscosity at 100°F (38°C) and an aniline point greater than 200°F (93°C)
(DO NOT USE OILS WITH ADDITIVES, COMPOUNDED OILS CONTAINING SOLVENTS, GRAPHITE, DETERGENTS, OR SYNTHETIC OILS.)

☐ Most popular.

Tel: +45 63 12 83 00 | Email: ps@hymatik.com | www.hymatik.com | Hvidkaervej 27a, DK-5250 Odense SV, Denmark

Material Specifications

Body	Aluminum
Body cap	ABS
Plastic bowl	Polycarbonate
Metal bowl	Aluminum
Seals	Nitrile
Sight dome	Polycarbonate
Sight gauge	Nylon
Suggested lubricant	ISO / ASTM VG32
Pick-up filter	Sintered bronze

Repair and Service Kits

Plastic bowl / bowl guard no drain	**P33KA00BGN**
Metal bowl / w/o sight gauge no drain	**P33KA00BMN**
Metal bowl / sight gauge no drain	**P33KA00BSN**
Drip control assembly	**P32KA00PG**
Fill plug	**P32KA00PL**
L-bracket (fits to body)	**P33KA00ML**
T-bracket (fits to body connector)	**P32KA00MB**
T-bracket with body connector	**P32KA00MT**
Body connector	**P32KA00CB**
Oil (1 quart)	**F442001**
Oil (1 galllon)	**F442002**
Oil (12 quart case)	**F442003**
Oil (4 gallon case)	**F442005**

Flow Charts

P33LA 1/2" Lubricator

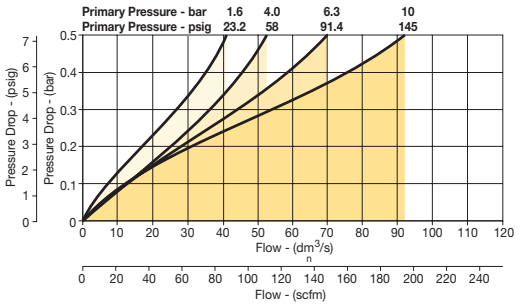

P33LA 3/4" Lubricator

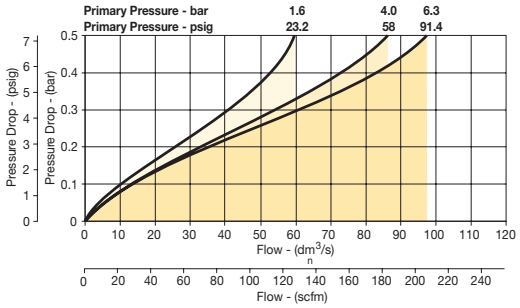

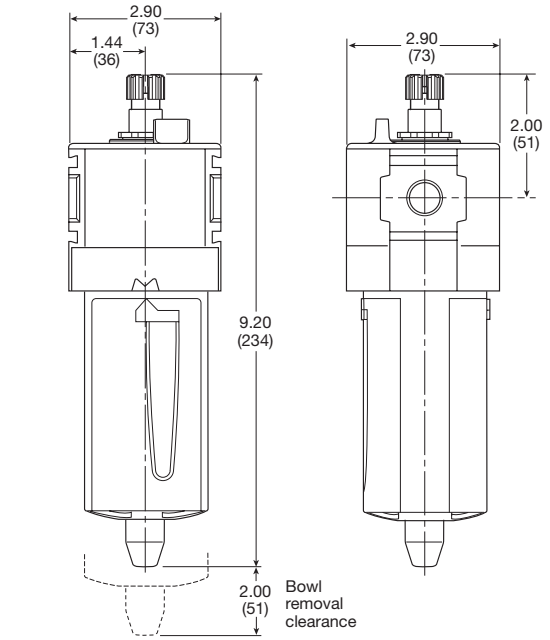

Inches (mm)

For inventory, lead times, and kit lookup, visit www.pdnplu.com

Parker Hannifin Corporation
Pneumatic Division
Richland, Michigan
www.parker.com/pneumatics

Tel: +45 63 12 83 00 | Email: ps@hymatik.com | www.hymatik.com | Hvidkaervej 27a, DK-5250 Odense SV, Denmark

Popular Combinations: Inlet pressure 145 psig (10 bar), secondary pressure 91.3 psig (6.3 bar), 14.5 psig (1 bar) pressure drop.



Filter + Regulator + Lubricator Combinations, poly bowl
5 micron element, 116 psig (8 bar) regulator + gauge and wall mounting brackets

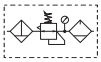

Port Size	Flow	Manual Drain	Pulse Drain
1/4"	27 scfm (13 dm³/s, ANR)	**P31CB92GEMN5LNW**	**P31CB92GEBN5LNW**



Filter/Regulator + Lubricator Combinations, poly bowl
5 micron element, 116 psig (8 bar) regulator + gauge and wall mounting brackets

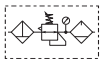

Port Size	Flow	Manual Drain	Pulse Drain
1/4"	28 scfm (14 dm³/s, ANR)	**P31CA92GEMN5LNW**	**P31CA92GEBN5LNW**



Ball Valve + Filter + Regulator + Lubricator Combinations, poly bowl
5 micron element, 116 psig (8 bar) regulator + gauge and wall mounting brackets



Port Size	Flow	Manual Drain	Pulse Drain
1/4"	27 scfm (13 dm³/s, ANR)	**P31QB92GEMN5LNW**	**P31QB92GEBN5LNW**



Ball Valve + Filter/Regulator + Lubricator Combinations, poly bowl
5 micron element, 116 psig (8 bar) regulator + gauge and wall mounting brackets

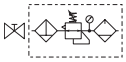

Port Size	Flow	Manual Drain	Pulse Drain
1/4"	28 scfm (14 dm³/s, ANR)	**P31QA92GEMN5LNW**	**P31QA92GEBN5LNW**

Filter / Regulator coding (use with codes: A M)

Filter coding (use with combo codes: B F G). **For multiple filters, repeat as needed.**

Regulator coding (use with combo code: B)

Lubricator coding (use with combo codes: A B)

Assembly configuration

P31 C B 9 2 G | **E M** | **N 5** | **L N** | **W**

Combination

B/V + Combination	Q
Combination + B/V	X
Combination	C

B/V = Ball valve

Thread Type

BSPP	1
BSPT	2
NPT	9

Port Size

1/4	2

Combination Type*

F/R+L	A	F+Fc+Fa	G
F+R+L	B	F/R+Fc	M
F+Fc	F		

* Combination type
F = 5µ
Fc1 = 1µ
Fc = .01µ
Fa = Adsorber

Bowl Type

Poly Bowl with Bowl Guard ‡	G
Metal Bowl without Sight Gauge	M

Note: All bowl types are the same for each component

Example: If a "G" is specified for a F+L, both units would get a poly bowl with bowl guard.

‡ For polycarbonate bowl, see caution in Engineering Section A.

Element

5µ Element	E
0.01µ Element	C
1µ Element	9
Adsorber	A

Drain Type

Manual Drain	M
Pulse Drain	B

Relief / Adjustment

Non-Rising Knob	N

Adjustment Range

With Round Gauge

30 psig; 2 Bar; 0.2 MPa	Z
60 psig; 4 Bar; 0.4 MPa	M
125 psig; 8 Bar; 0.8 MPa	G
232 psig; 16 Bar; 1.6 MPa	J§

Without Gauge

30 psig; 2 Bar; 0.2 MPa	Y
60 psig; 4 Bar; 0.4 MPa	L
125 psig; 8 Bar; 0.8 MPa	N
232 psig; 16 Bar; 1.6 MPa	H§

With Square Gauge

psig	Bar
30* = 1	2* = V
60 = 3	4 = S
125 = 5	8 = T

* Regulator comes with gauge respective to the adjustment range selected.

§ Not available with poly bowl with bowl guard.

Lub Type

Oil Mist Standard Sight Dome	L

Drain Type

No Drain; Closed End	N

Mounting

No Bracket	A
Port Blocks	C*
Port Blocks & Wall Brkt	D*
Wall Bracket	W

* For 3/8" Port Blocks please order separately. See Kits section.

For inventory, lead times, and kit lookup, visit www.pdnplu.com

Parker Hannifin Corporation
Pneumatic Division
Richland, Michigan
www.parker.com/pneumatics

Popular Combinations: Inlet pressure 145 psig (10 bar), secondary pressure 91.3 psig (6.3 bar), 14.5 psig (1 bar) pressure drop.



Filter + Regulator + Lubricator Combinations, poly bowl
5 micron element, 116 psig (8 bar) regulator + gauge and wall mounting brackets

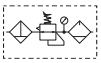

Port Size	Flow	Manual Drain	Auto Drain
1/4"	42 scfm (20 dm³/s, ANR)	**P32CB92GEMNGLNW**	**P32CB92GEANGLNW**
3/8"	68 scfm (32 dm³/s, ANR)	**P32CB93GEMNGLNW**	**P32CB93GEANGLNW**
1/2"	85 scfm (40 dm³/s, ANR)	**P32CB94GEMNGLNW**	**P32CB94GEANGLNW**



Filter/Regulator + Lubricator Combinations, poly bowl
5 micron element, 116 psig (8 bar) regulator + gauge and wall mounting brackets

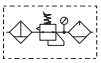

Port Size	Flow	Manual Drain	Auto Drain
1/4"	45 scfm (22 dm³/s, ANR)	**P32CA92GEMNGLNW**	**P32CA92GEANGLNW**
3/8"	70 scfm (33 dm³/s, ANR)	**P32CA93GEMNGLNW**	**P32CA93GEANGLNW**
1/2"	90 scfm (43 dm³/s, ANR)	**P32CA94GEMNGLNW**	**P32CA94GEANGLNW**



Ball Valve + Filter + Regulator + Lubricator Combinations, poly bowl
5 micron element, 116 psig (8 bar) regulator + gauge and wall mounting brackets



Port Size	Flow	Manual Drain	Auto Drain
1/4"	42 scfm (20 dm³/s, ANR)	**P32QB92GEMNGLNW**	**P32QB92GEANGLNW**
3/8"	68 scfm (32 dm³/s, ANR)	**P32QB93GEMNGLNW**	**P32QB93GEANGLNW**
1/2"	85 scfm (40 dm³/s, ANR)	**P32QB94GEMNGLNW**	**P32QB94GEANGLNW**



Ball Valve + Filter/Regulator + Lubricator Combinations, poly bowl
5 micron element, 116 psig (8 bar) regulator + gauge and wall mounting brackets

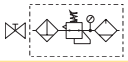

Port Size	Flow	Manual Drain	Auto Drain
1/4"	45 scfm (22 dm³/s, ANR)	**P32QA92GEMNGLNW**	**P32QA92GEANGLNW**
3/8"	70 scfm (33 dm³/s, ANR)	**P32QA93GEMNGLNW**	**P32QA93GEANGLNW**
1/2"	90 scfm (43 dm³/s, ANR)	**P32QA94GEMNGLNW**	**P32QA94GEANGLNW**

Filter / Regulator coding
(use with codes: A M)

Filter coding
(use with combo codes: B F G). **For multiple filters, repeat as needed.**

Regulator coding
(use with combo code: B)

Lubricator coding
(use with combo codes: A B)

Assembly configuration

P32 C B 9 4 G — **E M** — **N G** — **L N** — **W**

Combination

B/V + Combination	Q
Combination + B/V	X
Combination	C

B/V = Ball valve

Thread Type

BSPP	1
BSPT	2
NPT	9

Port Size

1/4	2*
3/8	3
1/2	4

* Order combo Q or X: ball valve (BV) comes with 3/8 ports.

Combination Type*

F/R+L	A	F+Fc+Fa	G
F+R+L	B	F/R+Fc	M
F+Fc	F		

* Combination type
F = 5µ
Fc1 = 1µ
Fc = .01µ
Fa = Adsorber

‡ For polycarbonate bowl, see caution in Engineering Section A.

Bowl Type

Poly Bowl with Bowl Guard ‡	G
Metal Bowl without Sight Gauge	M*
Metal Bowl with Sight Gauge	S

* Not available when using lubricator.
Note: All bowl types are the same for each component.

Example: If a "G" is specified for a F+L, both units would get a poly bowl with bowl guard.

Element

0.01µ Element	C
0.01µ Element with dpi	D*
5µ Element	E
5µ Element with dpi	F*
1µ Element	9
1µ Element with dpi	Q*
Adsorber	A

* Not available with F/R.

Drain Type

Auto Drain	A
Manual Drain	M

Relief / Adjustment

Non-Rising Knob Relieving	N

Adjustment Range

With Round Gauge

30 psig; 2 Bar; 0.2 MPa	Z
60 psig; 4 Bar; 0.4 MPa	M
125 psig; 8 Bar; 0.8 MPa	G
250 psig; 17 Bar; 1.7 MPa	J§

Without Gauge

30 psig; 2 Bar; 0.2 MPa	Y
60 psig; 4 Bar; 0.4 MPa	L
125 psig; 8 Bar; 0.8 MPa	N
250 psig; 17 Bar; 1.7 MPa	H§

With Square Gauge

psig	Bar
30* = 1	2* = V
60 = 3	4 = S
125 = 5	8 = T

* Regulator comes with gauge respective to the adjustment range selected.

§ Not available with poly bowl with bowl guard.

Lub Type

Oil Mist Standard Sight Dome	L

Drain Type

No Drain; Closed End	N

Mounting

No Bracket	A
Port Blocks	C
Port Blocks & Wall Brkt	D
Wall Bracket	W

For inventory, lead times, and kit lookup, visit www.pdnplu.com

Parker Hannifin Corporation
Pneumatic Division
Richland, Michigan
www.parker.com/pneumatics

Tel: +45 63 12 83 00 | Email: ps@hymatik.com | www.hymatik.com | Hvidkaervej 27a, DK-5250 Odense SV, Denmark

Popular Combinations: Inlet pressure 145 psig (10 bar), secondary pressure 91.3 psig (6.3 bar), 14.5 psig (1 bar) pressure drop.



Filter + Regulator + Lubricator Combinations, poly bowl
5 micron element, 116 psig (8 bar) regulator + gauge and wall mounting brackets

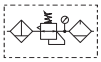

Port Size	Flow	Manual Drain	Auto Drain
1/2"	90 scfm (43 dm³/s, ANR)	**P33CB94GEMNGLNW**	**P33CB94GEANGLNW**
3/4"	110 scfm (52 dm³/s, ANR)	**P33CB96GEMNGLNW**	**P33CB96GEANGLNW**



Filter/Regulator + Lubricator Combinations, poly bowl
5 micron element, 116 psig (8 bar) regulator + gauge and wall mounting brackets

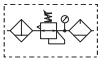

Port Size	Flow	Manual Drain	Auto Drain
1/2"	110 scfm (52 dm³/s, ANR)	**P33CA94GEMNGLNW**	**P33CA94GEANGLNW**
3/4"	150 scfm (71 dm³/s, ANR)	**P33CA96GEMNGLNW**	**P33CA96GEANGLNW**



Ball Valve + Filter + Regulator + Lubricator Combinations, poly bowl
5 micron element, 116 psig (8 bar) regulator + gauge and wall mounting brackets



Port Size	Flow	Manual Drain	Auto Drain
1/2"	90 scfm (43 dm³/s, ANR)	**P33QB94GEMNGLNW**	**P33QB94GEANGLNW**
3/4"	110 scfm (52 dm³/s, ANR)	**P33QB96GEMNGLNW**	**P33QB96GEANGLNW**



Ball Valve + Filter/Regulator + Lubricator Combinations, poly bowl
5 micron element, 116 psig (8 bar) regulator + gauge and wall mounting brackets

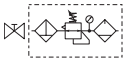

Port Size	Flow	Manual Drain	Auto Drain
1/2"	110 scfm (52 dm³/s, ANR)	**P33QA94GEMNGLNW**	**P33QA94GEANGLNW**
3/4"	150 scfm (71 dm³/s, ANR)	**P33QA96GEMNGLNW**	**P33QA96GEANGLNW**

Filter / Regulator coding (use with codes: A M)

Filter coding (use with combo codes: B F G). **For multiple filters, repeat as needed.**

Regulator coding (use with combo code: B)

Lubricator coding (use with combo codes: A B)

Assembly configuration

P33 C B 9 6 G E M N G L N W

Combination	
B/V + Combination	Q
Combination + B/V	X
Combination	C

B/V = Ball valve

Thread Type	
BSPP	1
BSPT	2
NPT	9

Port Size	
1/2	4
3/4	6

Combination Type*			
F/R+L	A	F+Fc+Fa	G
F+R+L	B	F/R+Fc	M
F+Fc	F		

* Combination type
F = 5µ
Fc1 = 1µ
Fc = .01µ
Fa = Adsorber

‡ For polycarbonate bowl, see caution in Engineering Section A.

Bowl Type ‡	
Poly Bowl with Bowl Guard	G
Metal Bowl without Sight Gauge	M*
Metal Bowl with Sight Gauge	S

* Not available when using lubricator.
Note: All bowl types are the same for each component.

Example: If a "G" is specified for a F+L, both units would get a poly bowl with bowl guard.

Element	
0.01µ Element	C
0.01µ Element with dpi	D*
5µ Element	E
5µ Element with dpi	F*
1µ Element	9
1µ Element with dpi	Q*
Adsorber	A

* Not available with F/R.

Drain Type	
Auto Drain	A
Manual Drain	M

Relief / Adjustment	
Non-Rising Knob Relieving	N

Adjustment Range	
With Round Gauge	
30 psig; 2 bar; 0.2 MPa	Z
60 psig; 4 bar; 0.4 MPa	M
125 psig; 8 bar; 0.8 MPa	G
250 psig; 17 bar; 1.7 MPa	J*
Without Gauge	
30 psig; 2 bar; 0.2 MPa	Y
60 psig; 4 bar; 0.4 MPa	L
125 psig; 8 bar; 0.8 MPa	N
250 psig; 17 bar; 1.7 MPa	H*

* Not available with poly bowl with bowl guard.

Lub Type	
Oil Mist Standard Sight Dome	L

Drain Type	
No Drain; Closed End	N

Mounting	
No Bracket	A
Port Blocks	C
Port Blocks & Wall Brkt	D
Wall Bracket	W

For inventory, lead times, and kit lookup, visit www.pdnplu.com

Parker Hannifin Corporation
Pneumatic Division
Richland, Michigan
www.parker.com/pneumatics

Tel: +45 63 12 83 00 | Email: ps@hymatik.com | www.hymatik.com | Hvidkaervej 27a, DK-5250 Odense SV, Denmark

Popular Combination Dimensions

inches (mm)

P31C

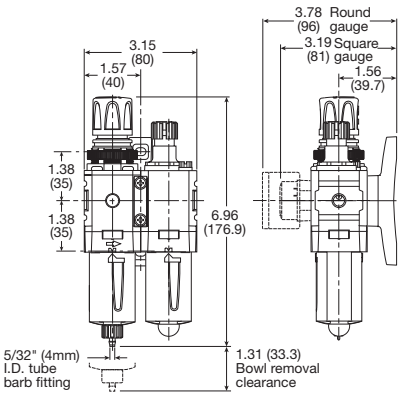

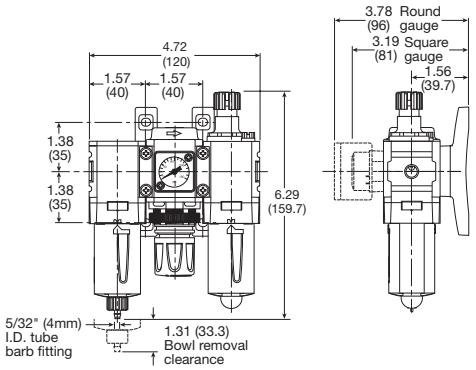

P32C

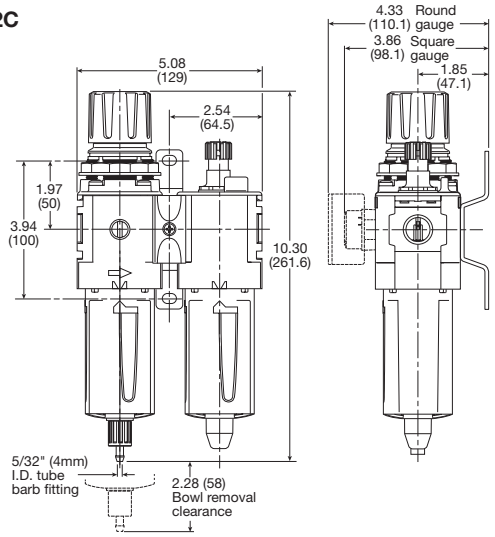

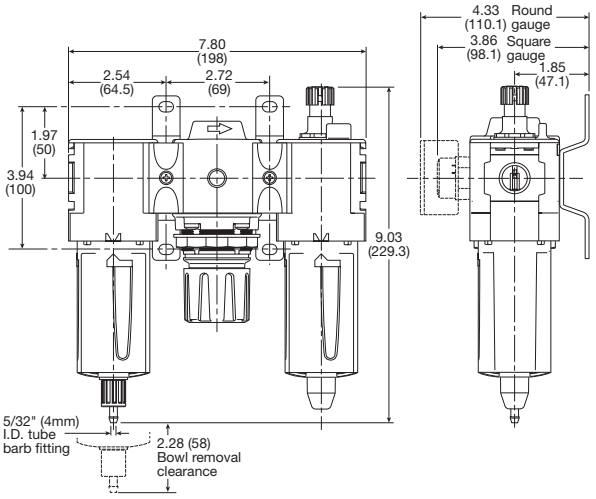

P33C

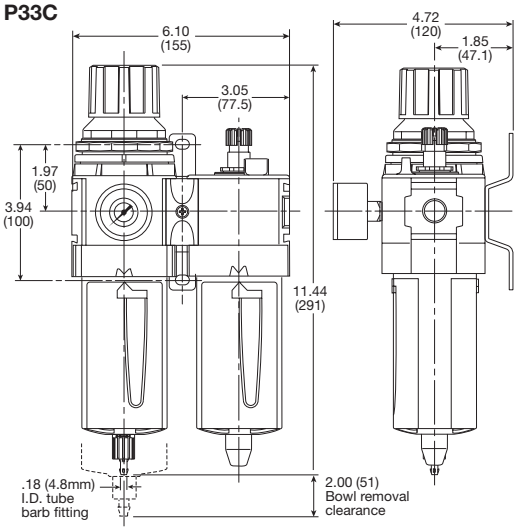

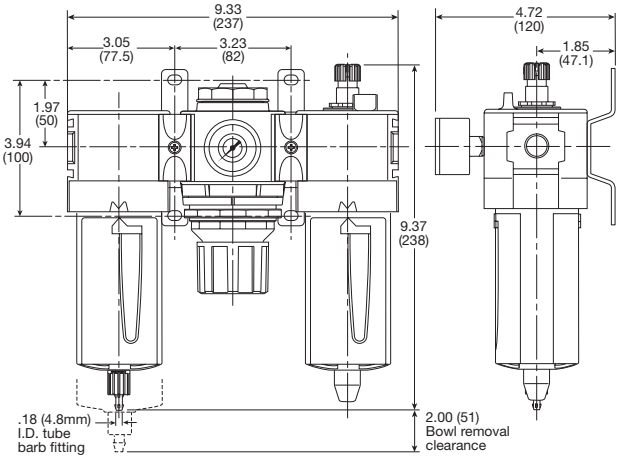

Tel: +45 63 12 83 00 | Email: ps@hymatik.com | www.hymatik.com | Hvidkaervej 27a, DK-5250 Odense SV, Denmark

P31D & P32D Dump Valves

- Modular design with 1/4" or 1/2" integral ports (NPT, BSPP & BSPT)
- The 3-way, 2-position function automatically dumps downstream pressure on the loss of pilot signal
- Solenoid or air pilot options
- High flow & exhaust capability
- Silencer included

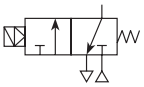

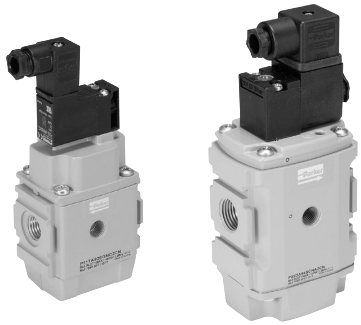

Remotely operated dump valves automatically shut off upstream pressure and exhaust the downstream pressure when the pilot pressure is released.

To maintain these units in the open position a pilot supply to the air pilot operated version or an electrical signal to the solenoid operated version must be maintained.

The valve will automatically dump when the holding signal is removed.

Port Size	Description	Weight lbs (kg)	Part Number
1/4"	120VAC Solenoid & cable plug	0.8 (0.37)	**P31DA92SGNC1FN**
1/4"	24VDC Solenoid & cable plug ‡	0.9 (0.41)	**P31DA92SGNC2CN**
1/4"	External air pilot operated	0.8 (0.37)	**P31DA92PPN**
1/2"	120VAC 30mm coil & cable plug incl. ‡	1.5 (0.69)	**P32DA94SCNA3GN**
1/2"	24VDC 30mm coil & cable plug incl. ‡	2.0 (0.91)	**P32DA94SCNA2CN**
1/2"	External air pilot operated ‡	1.9 (0.87)	**P32DA94PPN**

‡ Includes exhaust silencer

Operating information

Flow capacity*:	P31D	36 scfm (17 dm³/s, ANR)
	P32D	108 scfm (51 dm³/s, ANR)
Temperature range (max)†:		
Solenoid operated		14°F to 122°F (-10°C to 50°C)
Air pilot operated		-4°F to 176°F (-20°C to 80°C)
Pressure (max):		
Solenoid operated		150 psig (10 bar)
Air pilot operated		250 psig (17 bar)
Operating pressure (min):		44 psig (3 bar)
Fluid:		Compressed air
Ports:	Air pilot	1/8
	Exhaust	P31D - 1/4; P32D - 1/2
	Gauge	P31D - 1/8; P32D - 1/4

* Inlet pressure 91.3 psig (6.3 bar), inlet pressure and 14.5 psig (1 bar) pressure drop.

† Air supply must be dry enough to avoid ice formation at temperatures below 35.6°F (2°C). Snap pressure: Full flow when downstream pressure reaches 50% of the inlet pressure.

Ordering Information:

P31DA 9 2 S G N — Solenoid type only: **C 2CN**

Body Size

Dump Valve (1/4")	P31DA
Dump Valve (1/2")	P32DA

Thread Type

BSPP	1
BSPT	2
NPT	9

Port Size

Global Modular Mini (1/4")	2
Global Modular Compact (1/2")	4

Pilot Type

P	External Air Pilot
S	Solenoid Pilot

Actuator Interface

G	15mm Solenoid (P31 only)
C	30mm Solenoid
P	Threaded Air Pilot

Solenoid Type

C	15mm (P31 series only)
A	30mm CNOMO Coil (P32 only)
D	30mm CNOMO Coil (M12 connection) (P32 only)

Solenoid Voltage

2CN	24VDC Non Locking Manual Override
3GN	120VAC Non Locking Manual Override
1FN	120VAC Non Locking Manual Override (P31 series only)

Note:
P32 unit used for both P32 & P33 series

☐ Most popular.

For inventory, lead times, and kit lookup, visit www.pdnplu.com

Parker Hannifin Corporation
Pneumatic Division
Richland, Michigan
www.parker.com/pneumatics

Material Specifications

Body	Aluminum
Body cover	Polyester
Seals	Nitrile NBR

Mounting Brackets

	Description	Part Number P31D
 P31	L-bracket mounting kit	**P3HKA00ML**
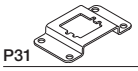 P31	Foot bracket mounting kit	**P3HKA00MC**

Note:
For solenoid operators and cable plugs (connectors) see pages B83 and B84.

Flow Charts

P31DA 1/4" Remote Dump Valve

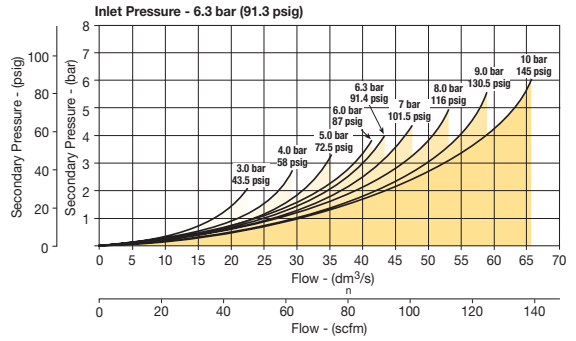

P32DA 1/2" Remote Dump Valve

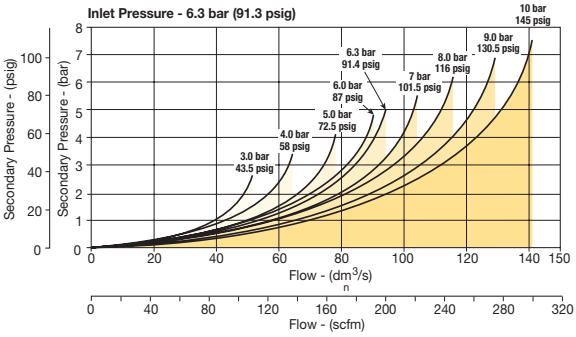

Dimensions inches (mm)

P31D

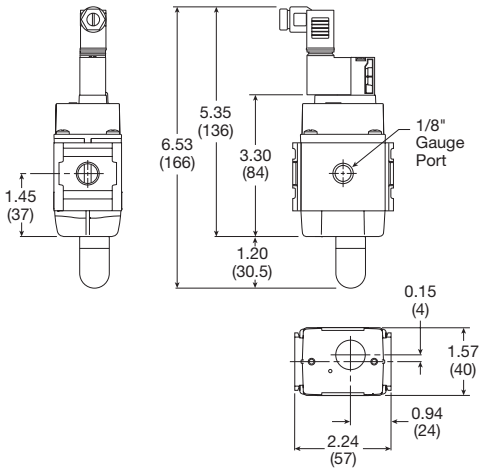

P32D

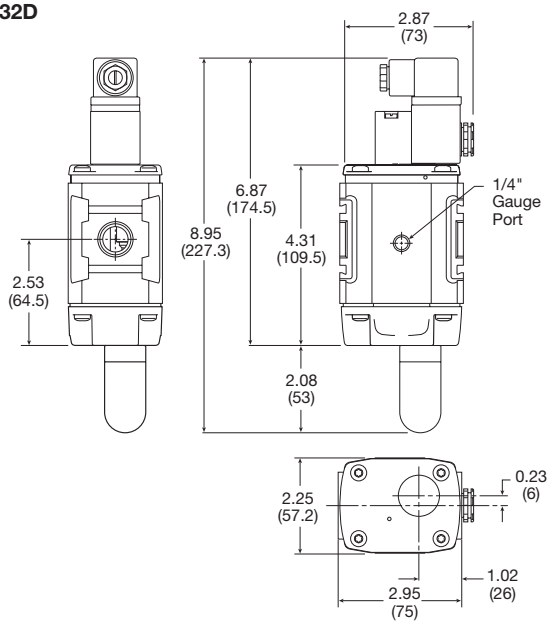

Most popular.

For inventory, lead times, and kit lookup, visit www.pdnplu.com

Parker Hannifin Corporation
Pneumatic Division
Richland, Michigan
www.parker.com/pneumatics

Tel: +45 63 12 83 00 | Email: ps@hymatik.com | www.hymatik.com | Hvidkaervej 27a, DK-5250 Odense SV, Denmark

P31S & P32S Soft Start Valves

- Modular design with 1/4" or 1/2" integral ports (NPT, BSPP & BSPT)
- The 2-way, 2-position function provides for the safe introduction of pressure
- Adjustable slow start
- Solenoid or air pilot options
- High flow

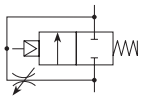

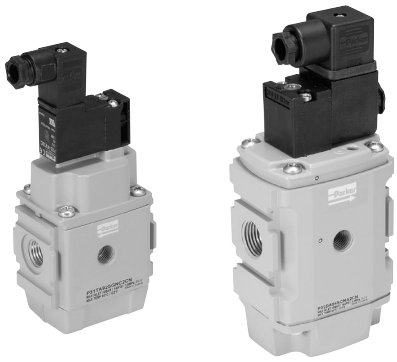

Parker Global Series Soft Start Valves, provide for the safe introduction of pressure to machines or systems. Soft Start Valves, allow the pressure to gradually build to the set point before fully opening to deliver full flow at line pressure.

The controlled introduction of pressure can be an important safety factor and prevent damage to tooling when air pressure is introduced at machine or system start up.

Note: Soft Start Valves must be installed downstream of a 3/2 valve with exhaust capability

Port Size	Description	Weight lbs (kg)	Part Number
1/4"	120VAC Solenoid & Cable Plug	0.8 (0.37)	**P31SA92SGNC1FN**
1/4"	24VDC Solenoid & Cable Plug	0.9 (0.41)	**P31SA92SGNC2CN**
1/4"	Internal Air Pilot Operated	0.8 (0.37)	**P31SA92Y0N**
1/4"	External Air Pilot (1/8" threaded)	0.8 (0.37)	**P31SA92PPN**
1/2"	120VAC 30mm Coil & Cable Plug Incl.	1.5 (0.87)	**P32SA94SCNA3GN**
1/2"	24VDC 30mm Coil & Cable Plug	2.0 (0.90)	**P32SA94SCNA2CN**
1/2"	Internal Air Pilot Operated	2.0 (0.90)	**P32SA94Y0N**
1/2"	External Air Pilot (1/8 threaded)	1.5 (0.87)	**P32SA94PPN**

Operating information

Flow capacity*:	P31S	36 scfm (17 dm^3/s, ANR)
	P32S	101 scfm (48 dm^3/s, ANR)
Temperature range (max)†:		
Solenoid operated		14°F to 122°F (-10°C to 50°C)
Air pilot operated		-4°F to 176°F (-20°C to 80°C)
Pressure (max):		
Solenoid operated		150 psig (10 bar)
Air pilot operated		250 psig (7 bar)
Operating pressure (min):		44 psig (3 bar)
Fluid:		Compressed air
Ports:	Air pilot	1/8
	Gauge	P31S - 1/8; P32S - 1/4

* Inlet pressure 91.3 psig (6.3 bar), inlet pressure and 14.5 psig (1 bar) pressure drop.

† Air supply must be dry enough to avoid ice formation at temperatures below 35.6°F (2°C). Snap pressure: Full flow when downstream pressure reaches 50% of the inlet pressure.

Ordering Information:

P31SA 9 2 S G N — Solenoid type only: **C 2CN**

Body Size

Soft Start	P31SA
Soft Start	P32SA

Thread Type

BSPP	1
BSPT	2
NPT	9

Port Size

Global Modular Mini (1/4")	2
Global Modular Compact (1/2")	4

Note: P32 unit used for both P32 & P33 series

Pilot type

P	External air pilot
S	Solenoid pilot
Y	Internal air pilot

Actuator Interface

0	Internal Pilot
G	15mm Solenoid (P31 only)
C	30mm Solenoid
P	Threaded Air Pilot

Solenoid type

C	15mm (P31 series only)
A	30mm CNOMO coil (P32 only)
D	30mm CNOMO coil (M12 connection) (P32 only)

Solenoid Voltage

2CN	24VDC non Locking Manual Override
3GN	120VAC non Locking Manual Override
1FN	120VAC Non Locking Manual Override (P31 series only)

☐ Most popular.

For inventory, lead times, and kit lookup, visit www.pdnplu.com

Parker Hannifin Corporation
Pneumatic Division
Richland, Michigan
www.parker.com/pneumatics

Tel: +45 63 12 83 00 | Email: ps@hymatik.com | www.hymatik.com | Hvidkaervej 27a, DK-5250 Odense SV, Denmark

Material Specifications

Body	Aluminum
Body cover	Polyester
Seals	Nitrile NBR

Service Kits

P31S	L-bracket mounting kit	**P3HKA00ML**
	Foot bracket mounting kit	**P3HKA00MC**
P32S	L-bracket mounting kit	**P3KKA00ML**
	Foot bracket mounting kit	**P3KKA00MC**

Note:
For solenoid operators and cable plugs (connectors) see pages B83 and B84.

Flow Charts

P31SA 1/4" Soft Start Valve

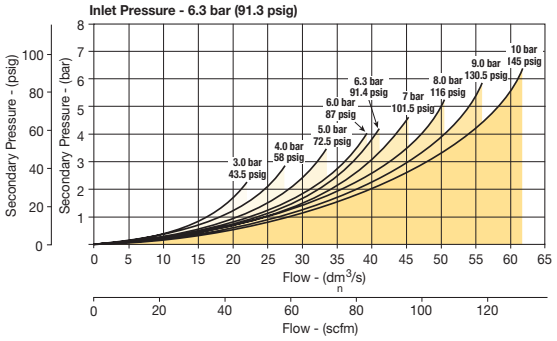

P32SA 1/2" Soft Start Valve

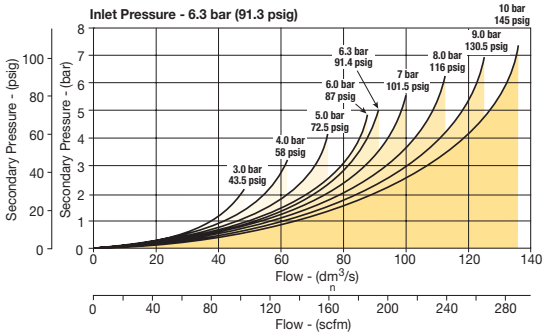

Dimensions inches (mm)

P31S

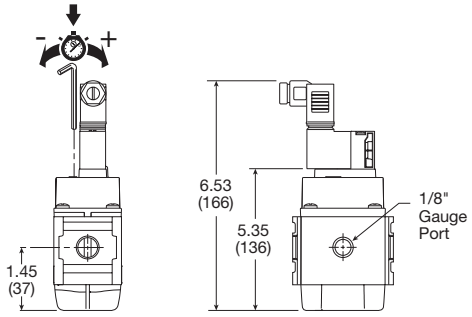

Soft Start Function:

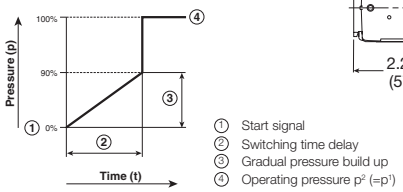

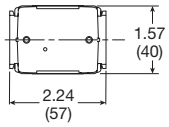

P32S

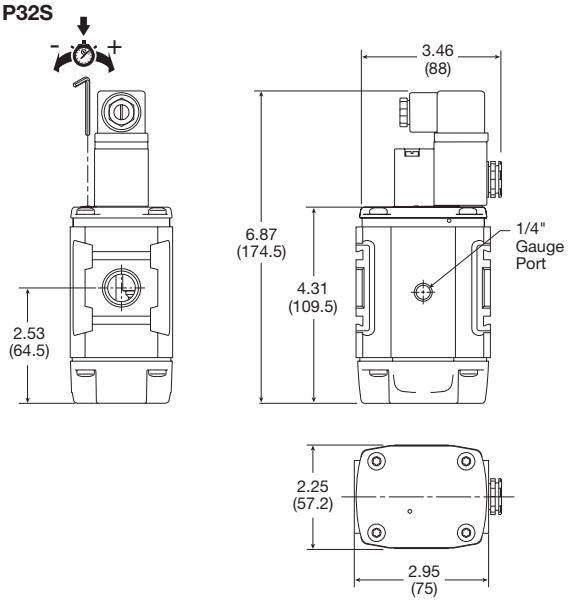

Parker Hannifin Corporation
Pneumatic Division
Richland, Michigan
www.parker.com/pneumatics

Tel: +45 63 12 83 00 | Email: ps@hymatik.com | www.hymatik.com | Hvidkaervej 27a, DK-5250 Odense SV, Denmark

P31T & P32T Combined Soft Start / Dump Valves

- Modular design with 1/4" or 1/2" integral ports (NPT, BSPP & BSPT)
- Provides for the safe introduction of pressure
- The 3-way, 2-position function automatically dumps downstream pressure on the loss of pilot signal
- Adjustable slow start
- Solenoid or air pilot options
- High flow & exhaust capability
- Silencer included

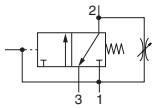



Parker Global Series Combined Soft Start / Dump Valves, provide for the safe introduction of pressure to machines or systems. Soft Start / Dump Valves when set, allow the pressure to gradually build to the set point before fully opening to deliver full flow at line pressure.

The controlled introduction of pressure can be an important safety factor and prevent damage to tooling when air pressure is introduced at machine or system start up.

To maintain these units in the open position a pilot supply to the air pilot operated version or an electrical signal to the solenoid operated version must be maintained. The valve will automatically dump when the holding signal is removed.

Port Size	Description	Weight lbs (kg)	Part Number
1/4"	120VAC Solenoid & cable plug	0.8 (0.37)	**P31TA92SGNC1FN**
1/4"	24VDC Solenoid & cable plug	0.9 (0.41)	**P31TA92SGNC2CN**
1/4"	External air pilot operated	0.8 (0.37)	**P31TA92PPN**
1/2"	120VAC 30mm coil & cable plug incl.	1.9 (0.87)	**P32TA94SCNA3GN**
1/2"	24VDC 30mm coil & cable plug incl.	2.0 (0.91)	**P32TA94SCNA2CN**
1/2"	External air pilot operated	1.9 (0.87)	**P32TA94PPN**

Operating information

Flow capacity*:	P31T	36 scfm (17 dm³/s, ANR)
	P32T	108 scfm (51 dm³/s, ANR)
Temperature range (max)†:		
Solenoid operated		14°F to 122°F (-10°C to 50°C)
Air pilot operated		-4°F to 176°F (-20°C to 80°C)
Pressure (max):		
Solenoid operated		150 psig (10 bar)
Air pilot operated		250 psig (7 bar)
Operating pressure (min):		44 psig (3 bar)
Fluid:		Compressed air
Ports:	Air pilot	1/8
	Exhaust	P31T - 1/4; P32T - 1/2
	Gauge	P31T - 1/8; P32T - 1/4

* Inlet pressure 91.3 psig (6.3 bar), inlet pressure and 14.5 psig (1 bar) pressure drop.

† Air supply must be dry enough to avoid ice formation at temperatures below 35.6°F (2°C). Snap pressure: Full flow when downstream pressure reaches 50% of the inlet pressure.

Ordering Information:

P31TA 9 2 S G N — Solenoid type only: **C 2CN**

Body Size

Soft Start / Dump Valve (1/4")	P31TA
Soft Start / Dump Valve (1/2")	P32TA

Thread Type

BSPP	1
BSPT	2
NPT	9

Port Size

Global Modular Mini (1/4")	2
Global Modular Compact (1/2")	4

Pilot Type

P	External Air Pilot
S	Solenoid Pilot

Actuator Interface

G	15mm Solenoid (P31 only)
C	30mm Solenoid
P	Threaded Air Pilot

Solenoid Type

C	15mm (P31 series only)
A	30mm CNOMO Coil (P32 only)
D	30mm CNOMO Coil (M12 connection) (P32 only)

Solenoid Voltage

2CN	24VDC Non Locking Manual Override
3GN	120VAC Non Locking Manual Override
1FN	120VAC Non Locking Manual Override (P31 series only)

Note:
P32 unit used for both P32 & P33 series

☐ Most popular.

For inventory, lead times, and kit lookup, visit www.pdnplu.com

Parker Hannifin Corporation
Pneumatic Division
Richland, Michigan
www.parker.com/pneumatics

Tel: +45 63 12 83 00 | Email: ps@hymatik.com | www.hymatik.com | Hvidkaervej 27a, DK-5250 Odense SV, Denmark

Material Specifications

Body	Aluminum
Body cover	Polyester
Seals	Nitrile NBR

Service Kits

P31T	L-bracket mounting kit	**P3HKA00ML**
	Foot bracket mounting kit	**P3HKA00MC**
P32T	L-bracket mounting kit	**P3KKA00ML**
	Foot bracket mounting kit	**P3KKA00MC**

Note:
For solenoid operators and cable plugs (connectors) see pages B83 and B84.

Flow Charts

P31TA 1/4" Soft Start & Dump Valve

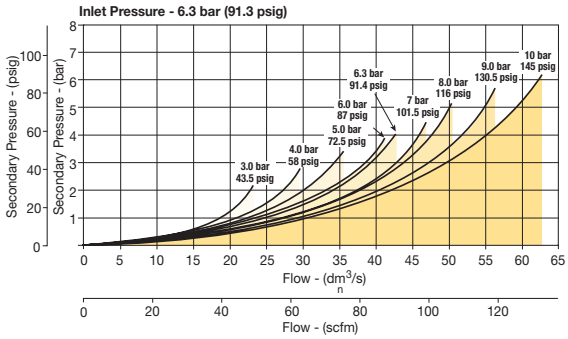

P32TA 1/2" Soft Start & Dump Valve

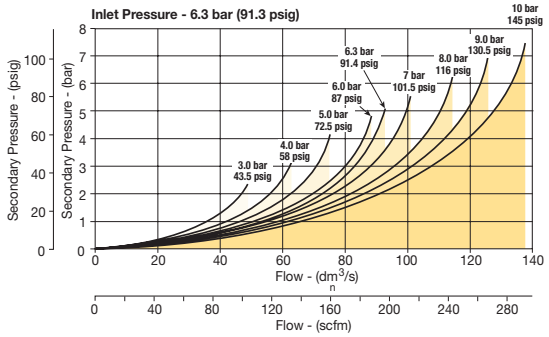

Dimensions inches (mm)

P31T

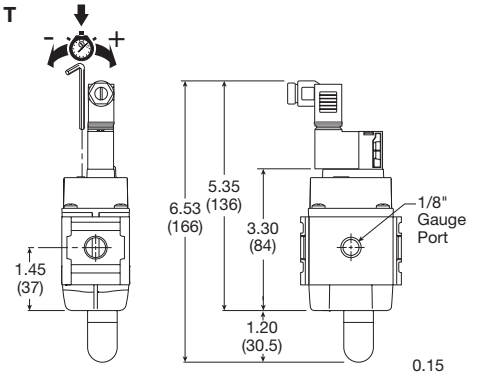

Soft Start Function:

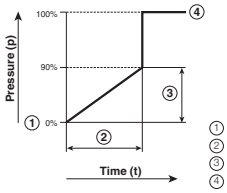

P32T

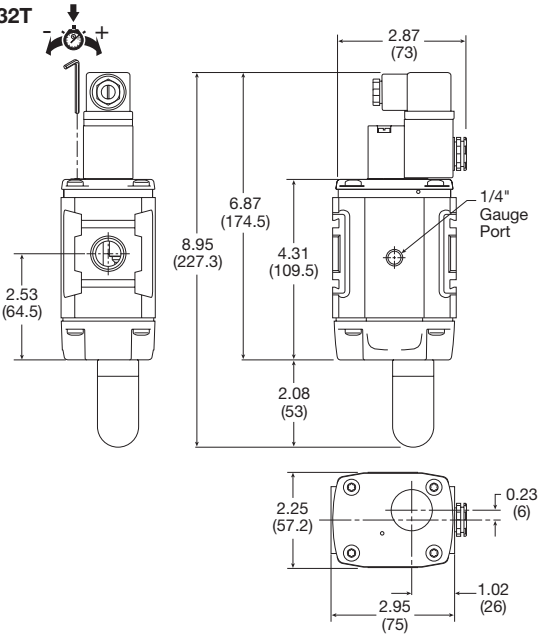

For inventory, lead times, and kit lookup, visit www.pdnplu.com

Parker Hannifin Corporation
Pneumatic Division
Richland, Michigan
www.parker.com/pneumatics

P33D & P33T Safety Exhaust Valves

- Easy electrical interface with M12 connectors to safety circuit
- External monitoring provides a cost and space saving advantage
- Solid state pressure sensors provide accurate, fast fault detection
- Quick visual LED indicators on the front of the valve
- Superior seated seal design for longer life
- Safety exhaust outlet is no-maintenance and non-clog by design
- Suitable for stand alone use or modular mounting to P32 or P33 FRL assembly
- High B10 life value
- Fast exhaust times allow for smaller machine footprint

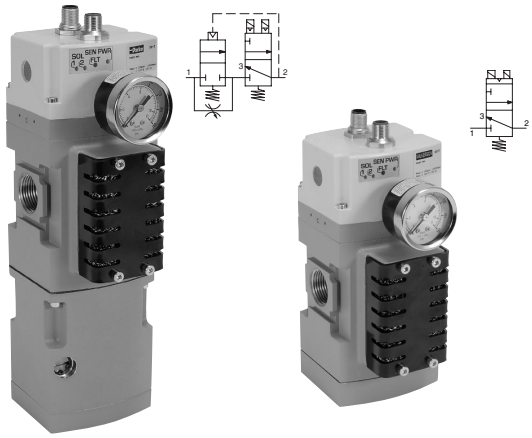

(optional soft start)



Operating information

Operating pressure:	30 to 150 PSIG (2 to 10 bar)
Minimum operating pressure:	30 PSIG (2 bar)
Ambient temperature:	40° to 120°F (4° to 50°C)
Recommended filtration:	40µ
Operating medium:	Compressed air
Ingress protection class:	IP65
B10 (mio):	10 million switching cycles
B10 d (mio):	20 million switching cycles
Allowable discordance:	150ms
Flow media:	Compresses air to ISO 8573-1 Class 7:4:4
Weight lbs (kg):	6.5 (2.9) with soft start 4.2 (1.9) without soft start

The soft start opens to full flow at approximately 60% of input pressure.

Ordering Information:

P3	3	T	B	1	6	A	B	E	N

Series
Standard P3

Global
Standard 3

Type
Safety Redundant (no soft start) D
Safety Redundant (c/w soft start) T

Design
Current B

Thread Type
BSPP 1
NPT 9

Port Size
3/4" [1] 6

Output for Solenoid, M12 Connector Pin
2 & 4, Common 3 A
3 & 4 C
2 & 4 D

Output for Sensors, M12 Connector Pin
1 & 2, 1 & 4, Common 3 A
1 & 2, 5 & 4, Common 3 B
5 & 2, 1 & 4, Common 3 C

Sensor Monitoring
External E

Gauge [2]
No Gauge N
Dial Gauge [3] (standard) G
Digital Gauge [3] D
MPS-P34 Pressure Sensor M

Notes:
1. For 1/2" connections use 1/2" port blocks on standard 3/4" housing.
2. Safety valve supplied with 1/8" gauge port in either BSPP or NPT threads as specified for ports. Gauges shipped loose.
3. Dial or digital gauge not available on BSPP version.

Note: Mounting hardware and port blocks are sold separately.

☐ Most popular.

Tel: +45 63 12 83 00 | Email: ps@hymatik.com | www.hymatik.com | Hvidkaervej 27a, DK-5250 Odense SV, Denmark

Safety Exhaust Valves

General Technical Data

Valve type	Externally monitored, redundant, dual poppet
Soft start	Optional
Valve function	3/2 way, normally closed
Housing material	Cast aluminum
Seals	NBR
Fasteners	Stainless steel / brass
Silencer	Steel, non clog safety design

Electrical Specifications

Operating voltage 24V DC	
Electrical connection	Two M12 connectors
Switching time 1-2 (ms)	23.3
Switching time 2-3 (ms)	42.7
Duty cycle (%)	100%
Operating voltage (DC)	21.6 to 26.4
Nominal power	
per solenoid coil at 24V DC (W) +/- 10%	1.2 W
per pressure sensor at 24V DC	1.2 W

In accordance with EN ISO 13849-1 this safety valve is suitable for use up to Category 4, Ple, sil 3. Certified to $_{c}CSA_{us}$ and bears the CE mark.

A product Integration Guide is available to help connect your logic controller to the Parker Safety Exhaust Valve under the Product Support tab at www.parker.com/pdn/safetyvalve

Mounting Hardware

Body Connector		**P32KA00CB**
T-Bracket w / Body Connector		**P32KA00MT**
T-Bracket (fits to body connector or port block)		**P32KA00MB**
Port Block Kits (includes two)	1/2" NPT	**P32KA94CP**
	1/2" BSPT	**P32KA24CP**
	1/2" BSPP	**P32KA14CP**
	3/4" NPT	**P32KA96CP**
	3/4" BSPT	**P32KA26CP**
	3/4" BSPP	**P32KA16CP**

Solenoid M12 Pinouts

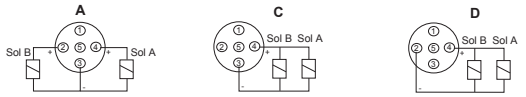

Pressure Sensor M12 Pinouts

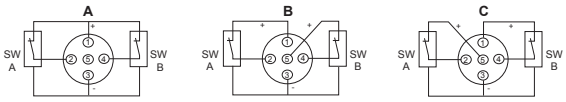

Externally Monitored (with Soft Start)

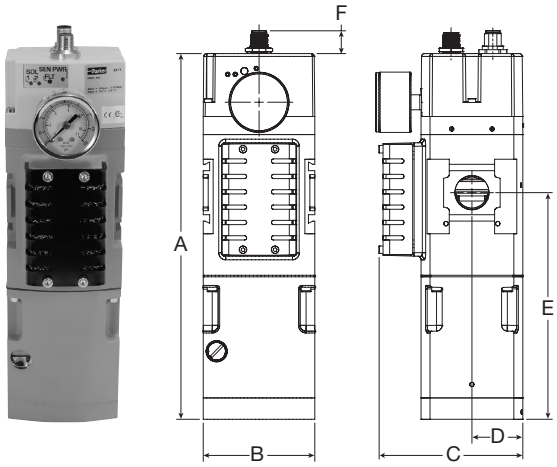

Externally Monitored (No Soft Start)

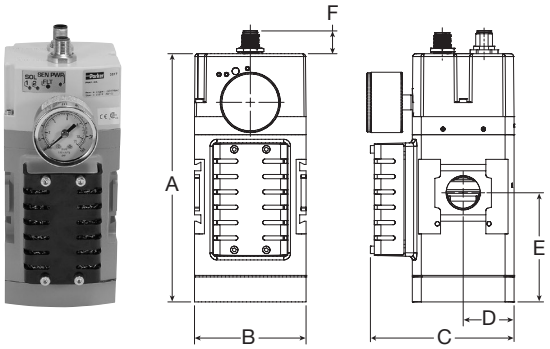

Dimensions inches (mm)

	Ports	Standard nominal flow rate 1 → 2 L/min (SCFM)*	Standard nominal flow rate 2 → 3 L/min (SCFM)*	A	B	C	D	E	F
Externally Monitored with soft start	3/4"	4,100 (145)	7,500 (265)	10.31 (261.9)	3.15 (80)	4.30 (109.3)	1.44 (36.5)	6.39 (162.3)	0.64 (16.3)
Externally Monitored no soft start	3/4"	4,300 (152)	7,500 (265)	7.03 (178.7)	3.15 (80)	4.30 (109.3)	1.44 (36.5)	3.11 (79.0)	0.64 (16.3)

* Standard nominal flow rate is based on 6 bar input pressure with ΔP = 1 bar

Safety Exhaust Valve Function

When applications demand a safe environment you can count on safety valves from Parker Hannifin. The P33 family of safety exhaust valves are 3/2 normally closed valves designed to rapidly exhaust compressed air in the event of a fault condition and to provided monitored coverage ensuring safe function. The P33 is available in two distinct styles, internally* or externally monitored. The valve is suitable for use up to Category 4, performance level e. Monitoring is achieved externally via a two channel system connected to a safety interface device. Both valves are available with an adjustable soft start and high flow exhaust to shut your equipment down faster when needed. LED's provide clear status of main solenoid operation, sensor power and fault condition for quick visual reference.

Externally Monitored Valve, Faults and Resets

The externally monitored valve has the monitoring done via a PLC or relay which offers a size and cost advantage over internally monitored valves. The integration of a safety interface into the PLC or relay will help determined the achievable category and performance level of the control system. Customers are required to provide the logic function via the safety device. The valve will lock-out to the "safe state" if asynchronous movement of the valve elements occur which will be detected by solid state pressure sensors. To achieve the proper safety rating, the safety PLC or relay must monitor the solid state pressure sensors to ensure they are not in different states for more than 150ms. If the sensors are in different states for longer than 150ms then the programming logic must shut off power to the solenoids and consider it a fault condition. If during operation the externally monitored P33 enters a fault condition the valve will shut off. A separate reset signal must be incorporated into the logic sequence to avoid automatic restart of the valve. The safety exhaust valves are not for use with clutch or brake applications and are designed for use in conjunction with a safety relay or safety PLC for safe monitoring and fault detection.

Achieving Desired Performance Level **

The category and performance level (PLr) needed for your machine is determined by a risk assessment of the machinery design and application based on EN ISO 13849-1. The Parker P33 safety valve is designed for those applications requiring a PL of d or e. Please note these levels require other aspects of the system to meet these requirements. As a guide: you can achieve a Cat 4 PL e system by integrating monitoring via a programmable safety rated device. Because the P33 is a mechanical fail-safe device, the monitoring could also be done via a standard PLC and still attain as high as a PL d rating.

Cat 3, PL d

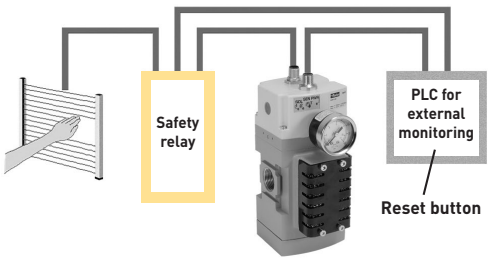

Cat 4, PL e

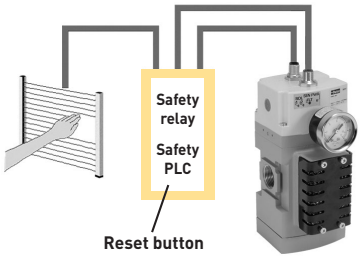

* For information on internally monitored safety valves reference Bulletin 0700-B13.

** An integration guide is available to provide further information on connecting the safety valve product to achieve the desired performance level. Please consult Parker and the standard EN ISO 13849-1 for more information.

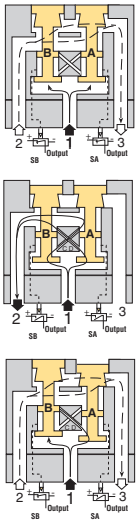

Conditions at Start

The Safety exhaust valve starts with inlet 1 closed to outlet 2 by both valve elements A and B. Outlet 2 is open to exhaust 3. Pressure signals at both sensors SA and SB are exhausted and contacts 1 and 2 of sensors SA and SB are connected. The normally closed sensors both provide voltage feedback signals to the external monitoring system.

Normal Operation

During normal operation the two solenoids are simultaneously energized which actuates both pilots and causes valve elements A and B to shift. Inlet 1 is then connected to outlet 2 via crossflow passages C and D. Exhaust 3 is closed. Sensing pressure signals go to each pressure sensor and become equal to inlet pressure. Both sensors contacts open and no voltage signals are provided to the external monitoring system. This indicates that both sides of the valve actuated as expected.

Detecting a Malfunction

A malfunction in the system or the valve itself could cause one valve element to be open and the other closed. Air then flows past the inlet poppet on valve element A, into crossflow passage D, but is substantially blocked by the spool portion of element B. The large size of the open exhaust passage past element B keeps the pressure at the outlet port below 2% of inlet pressure. Full sensing air pressure from side A goes to sensor SA, and a reduced pressure goes to sensor SB. This full pressure signal causes SA to open. Sensor SB, with a reduced pressure signal, does not open. An external monitoring system can detect the malfunction by monitoring the outputs of the SA and SB sensors. The external monitor system must then react accordingly by shutting down the power to the valve solenoids and any other components deemed necessary to stop the machine.

Parker Hannifin Corporation
Pneumatic Division
Richland, Michigan
www.parker.com/pneumatics

Tel: +45 63 12 83 00 | Email: ps@hymatik.com | www.hymatik.com | Hvidkaervej 27a, DK-5250 Odense SV, Denmark

Machinery Directive - Overview

The Machinery Directives' goal is to protect people and the environment from accidents caused from all types of machinery. Based on the standard EN 13849 [safety of machines; safety-related parts of control systems] these standards build the procedure to assess safety-related control systems.

Required Performance Level (PLr) based on a risk assessment are now commonly used to determine the safety level required for the controls system, for the application of machinery.

Performance Level (PL) based on the original B, 1,2,3,4 safety categories, diagnostic capabilities, Mean time to dangerous failure (MTTFd), and common cause failure (CCF), define safety levels of a given safety function. This ensures that safety is not just focused on component reliability, but instead introduces common sense safety principles such as redundancy, diversity, and fail-safe behavior of safety related control parts.

The new EN 13849 standards of the Machinery Directive dictates the machine is safe when the Performance Level of the safety control circuit is equal to or greater than the Required Performance Level of the application. When determining the required performance level, the greater the risk, the higher the requirements of the control system.

$$PLr \leq PL$$

Determining PLr According to EN 13849-1

The level of each hazardous situation is classified in five Performance levels from a to e. With PL a the control functions contribution to risk reduction is low, while at PL e it is high. The risk graph above can be used as a guideline to determine the required performance level PLr for safety function.

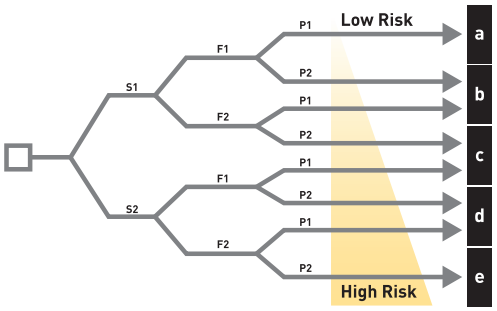

Risk Parameters

(S) Severity of injury

- **S1 Slight (normally reversible injury)**
- **S2 Serious (normally irreversible injury, or death)**

(F) Frequency and / or duration of exposure to hazard

- **F1 Seldom to less often and / or brief**
- **F2 Frequent to continuous and / or long**

(P) Possibility of avoiding the hazard

- **P1 Possibility of avoiding the hazard**
- **P2 Scarcely ever possible**

Determining PL According to EN 13849-1

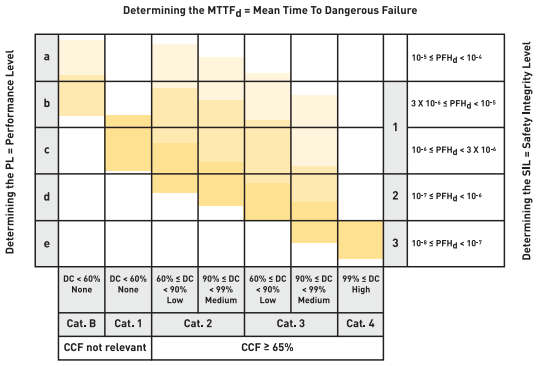

Categories Defined by EN 13849-1

Category	Summary
Category B	When a fault occurs it can lead to the loss of the safety function.
Category 1	Same that Category B, but loss of the safety function is less likely thanks to a good MTTFd of each channel.
Category 2	System behavior allow that the occurrence of a fault can lead to the loss of the safety function between the checks; the loss of the safety function is detected by the check.
Category 3	A single fault in any of safety related parts does not lead to the loss of the safety function. Whenever reasonably possible the single fault shall be detected at or before the next demand upon the safety function. (Means redundancy)
Category 4	Same as Category 3, but if detection of single fault is not possible on or before the next demand upon the safety, an accumulation of these undetected faults shall not lead to the loss of the safety function. (Means redundancy & check)

Tel: +45 63 12 83 00 | Email: ps@hymatik.com | www.hymatik.com | Hvidkaervej 27a, DK-5250 Odense SV, Denmark

P33T Redundant Safety Exhaust Valve

- Proven control reliable technology with integrated soft start
- Soft start application of air to the system when energized; can be adjusted for slower or faster buildup of system pressure
- Rapid exhaust of downstream air when de-energized to remove stored energy and allow safe access
- Memory, monitoring, and air flow control functions are integrated into two identical valve elements. Valves lock-out if asynchronous movement of valve elements occurs during actuation or de-actuation, resulting in a residual outlet pressure of less than 1% of supply.
- Reset can only be accomplished by the integrated electrical (solenoid) reset. Cannot be reset by removing and re-applying supply pressure.
- Basic 3/2 normally closed valve function: Dirt tolerant, wear compensating poppet design for quick response and high flow capacity.
- LED indicators of main solenoid operation, reset solenoid operation, and status indicator condition.
- Optional transducer for monitoring of downstream pressure in the system.
- Dual exhaust silencers included.
- Not for use with clutch / brake applications.
- For use in conjunction with a safety relay or safety PLC.



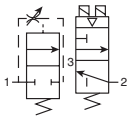

Port size			Cv		
Inlet	Outlet	Transducer	1 to 2	2 to 3	Part Number*
3/4	3/4	w/o transducer	3.7	8.5	**P33TA96RG4F2CN**
3/4	3/4	w/ transducer	3.7	8.5	**P33TA96RG4G2CN**

* NPT port threads. For BSPP threads, replace "9" in the part number with a "1".

Operating information

Pilot Solenoids:	According to VDE 0580
Enclosure rating:	According to DIN 400 50 IP65
Connector socket:	According to DIN 43650 Form A Three solenoids, rated for continuous duty
Standard voltages:	24VDC
Power consumption (each solenoid), for primary & reset solenoids:	1.2 Watts on DC
Enclosure rating:	IP65, IEC 60529
Electrical connection:	M12, 5-pin
Ambient temperature:	15°F to 122°F (-10°C to 50°C)
Media temperature:	40°F to 175°F (4°C to 80°C)
Flow media:	Compressed Air, Filtered to Minimum 40 Micron
Inlet pressure:	30 to 150 psig (2 to 10 bar)
Monitoring:	Dynamically, cyclically, internally during each actuating and de-actuating movement. Monitoring function has memory and requires an overt act to reset unit after lockout.
Mounting orientation:	Vertically with pilot solenoids on top
Port threads:	3/4 NPT, 3/4 BSPP
Control reliable:	Category 4 (Cat 4); performance Level e (PLe) in accordance with Machine directive - EN ISO 13849-1 (Certification pending)
Weight:	16.1 lb (7.3 kg) w/o transducer 16.3 lb (7.4 kg) w/ transducer

Ordering Information:

P33TA | **9** | **6** | **R** | **G** | **4** | **F** | **2CN**

- **Body Size**: Standard — P33T
- **Thread Type**: BSPP — 1; NPT — 9
- **Port Size**: 3/4" — 6
- **Type**: Solenoid Pilot + Gauge — R
- **Operator**: 15mm Solenoid — G
- **Mounting**: Cat 4 w/Bracket — 4
- **Solenoid**: Dual M12 Connector without Transducer — F; Triple M12 Connector with Transducer — G
- **Voltage**: 24VDC with Manual Override — 2CN

☐ Most popular.

For inventory, lead times, and kit lookup, visit www.pdnplu.com

Parker Hannifin Corporation
Pneumatic Division
Richland, Michigan
www.parker.com/pneumatics

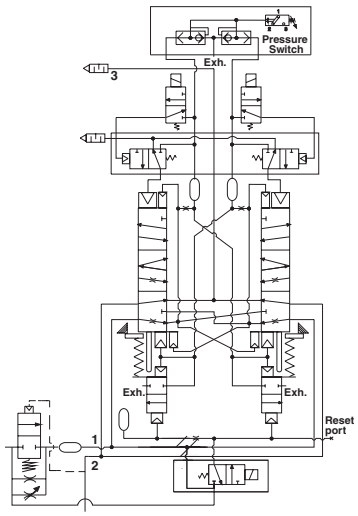

Repair and Service Kits

Black grill	**1834C05-001**
Body connector	**P32KA00CB**
M12, 5-pin female to flying lead cable, TPE; 6.6 ft (2 m)	**RKC 4.5T-2/S1587**
M12, 5-pin male to flying lead cable, TPE; 6.6 ft (2 m)	**RSC 4.5T-2/S1587**
1/2 NPT, port block kit	**P32KA94CP**
3/4 NPT, port block kit	**P32KA96CP**
1/2 BSPP, port block kit	**P32KA14CP**
3/4 BSPP, port block kit	**P32KA16CP**
1/2 BSPT, port block kit	**P32KA24CP**
3/4 BSPT, port block kit	**P32KA26CP**
Pressure switch	**1227A30-001**
Pressure transducer (optional)	**1232H30-001**
T-bracket w/ body connector	**P32KA00MT**
T-bracket (fits to body connector or port block)	**P32KA00MB**
Silencer(s) 3/4"	**5500A5013**
Solenoid (main & reset)	**1527B7916-001**
Square flush mounting gauge kit, 0-160 psig	**K4511SCR160**

Valve Wiring

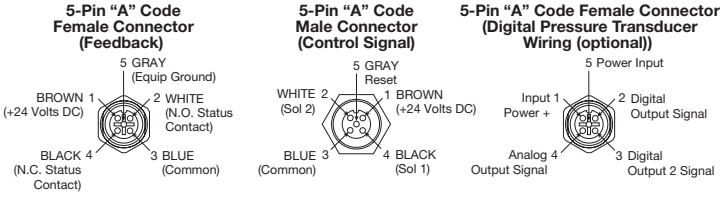

Dimensions inches (mm)

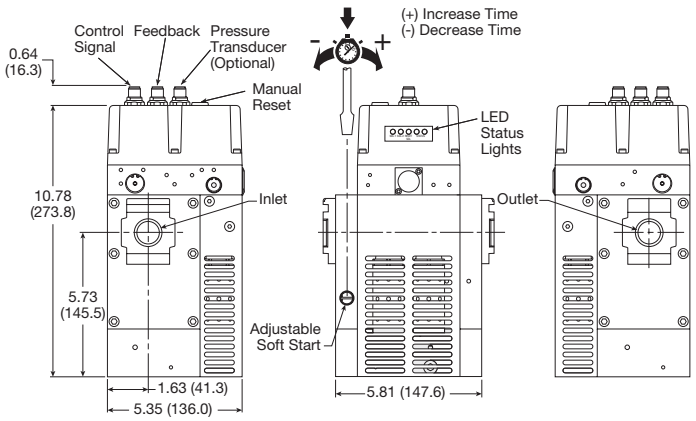

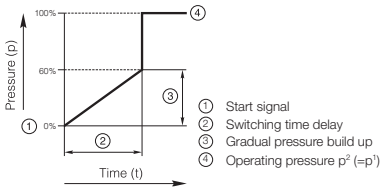

Angle Mounting Bracket

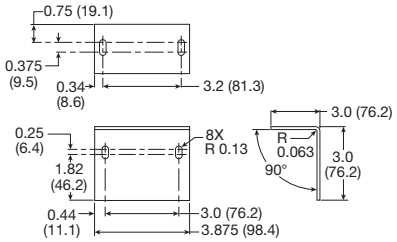

Note: Mounting bracket and installation screws included and required to install unit in the system.

For inventory, lead times, and kit lookup, visit www.pdnplu.com

Parker Hannifin Corporation
Pneumatic Division
Richland, Michigan
www.parker.com/pneumatics

Tel: +45 63 12 83 00 | Email: ps@hymatik.com | www.hymatik.com | Hvidkaervej 27a, DK-5250 Odense SV, Denmark

Valve de-actuated (ready-to-run):

The flow of inlet air pressure to the inlet chamber of the main valve internals is restricted by a fixed orifice and an adjustable flow control as well as an air piloted 2-way normally closed poppet valve. The flow of inlet air pressure into the crossover passages is restricted by the size of the passage between the stem and the valve body opening. Flow is sufficient to quickly pressurize pilot supply / timing chambers 1 and 2. The inlet poppets prevent air flow from crossover passages into the outlet chamber. Air pressure acting on the inlet poppets and return pistons securely hold the valve elements in the closed position. (Reset adapter omitted for clarity.)

The green “Status” LED will be illuminated indicating the valve is operational.



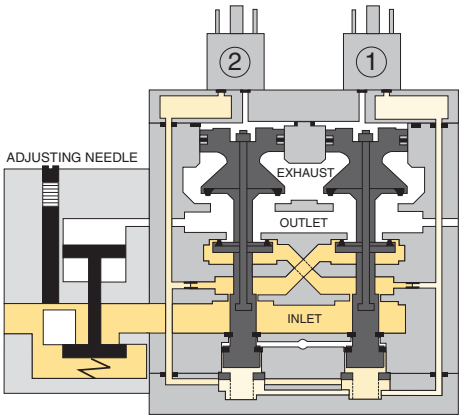

Valve actuated:

Energizing the pilot valves simultaneously applies pressure to both pistons, forcing the internal parts to move to their actuated (open) position, where inlet air flow to crossover passages is fully open, inlet poppets are fully open and exhaust poppets are fully closed. The outlet is then pressurized at a rate allowed by the fixed orifice and the adjusted flow control. Once the air pressure in the outlet chamber reaches approximately 60% of inlet pressure, the air piloted 2-way normally closed poppet valve opens fully and the pressure in the inlet, crossovers, outlet, and timing chambers are quickly equalized. The adjustable flow control will control the time it takes for the outlet air pressure to reach approximately 60% of inlet pressure.

De-energizing the pilots quickly causes the valve elements to return to the ready-to-run position.

Solenoid 1, Solenoid 2 and the green “Status” LED’s will be illuminated indicating the valve is operating properly.



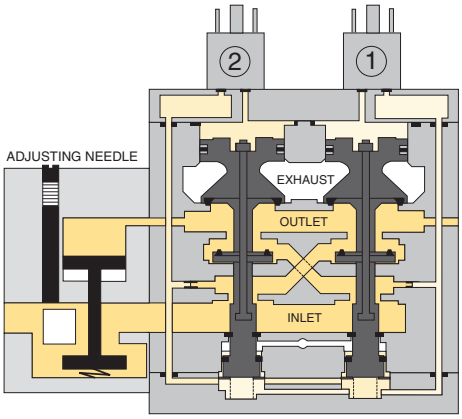

Soft start function:

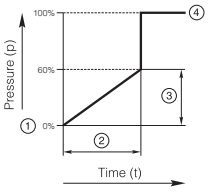

① Start signal
② Switching time delay
③ Gradual pressure build up
④ Operating pressure p^2 (=p^1)

For inventory, lead times, and kit lookup, visit www.pdnplu.com

Parker Hannifin Corporation
Pneumatic Division
Richland, Michigan
www.parker.com/pneumatics

Valve fault and lock-out:

Whenever the valve elements operate in a sufficiently asynchronous manner, either on actuation or de-actuation, the valve will move to a locked-out position. In the locked-out position, one crossover and its related timing chamber will be exhausted, and the other crossover and its related timing chamber will be fully pressurized. The valve element (side 2) that is partially actuated has pilot air available to fully actuate it, but no air pressure on the return piston to fully de-actuate the valve element.

Air pressure in the crossover acts on the differential of side 2 stem diameters creating a latching force. Side 1 is in a fully closed position, and has no pilot air available to actuate, but has full pressure on the inlet poppet and return piston to hold the element in the fully closed position. Inlet air flow on side 1 into its crossover is restricted, and flows through the open inlet poppet on side 2, through the outlet into the exhaust port, and from the exhaust port to atmosphere. Residual pressure in the outlet is less than 1% of inlet pressure. The return springs are limited in travel, and can only return the valve elements to the intermediate (locked-out) position. Sufficient air pressure acting on the return pistons is needed to return the valve elements to a fully closed position.

The red “Status” LED will be illuminated indicating the valve in fault and lock-out must be reset

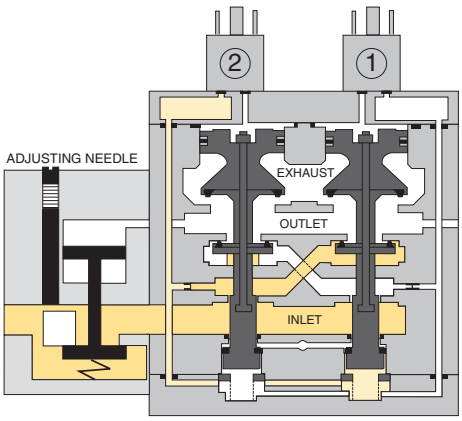

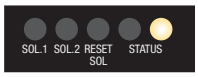

Valve reset (electrical or manual):

The reset procedure is as follows:

- Remove the electrical signals to the main coils
- Ensure there is air supplied to the valve
- Energize the reset solenoid for a minimum of 200 ms
- Allow a 200 ms delay after de-energizing the reset solenoid and re-energizing the main solenoids

The valve will remain in the locked-out position, even if the inlet air supply is removed and re-applied.

A remote reset signal must be applied to reset the valve. A momentary, remote electrical signal must be applied to the reset solenoid to apply pressure to the reset pistons in the valve. Actuation of the reset piston physically pushes the main valve elements to their closed position. Inlet air fully pressurizes the crossovers and holds the inlet poppets on seat. Actuation of the reset piston opens the reset poppet, thereby, immediately exhausting pilot supply air, thus, preventing valve operation during reset (Reset adapter added to illustration.). De-actuation of reset pistons causes the reset poppets to close and pilot supply to fully pressurize. Reset air pressure is applied by a 3/2 normally closed solenoid, or a manual push button mounted on the reset adapter in the top valve cover.

The green “Status” LED will be illuminated once the valve is reset.

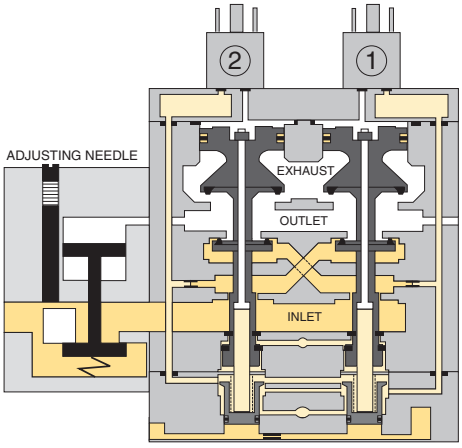

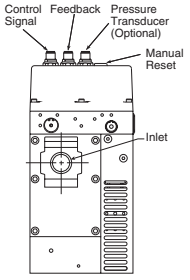



For inventory, lead times, and kit lookup, visit www.pdnplu.com

Parker Hannifin Corporation
Pneumatic Division
Richland, Michigan
www.parker.com/pneumatics

Tel: +45 63 12 83 00 | Email: ps@hymatik.com | www.hymatik.com | Hvidkaervej 27a, DK-5250 Odense SV, Denmark

Ball Valve / Lockout Valve

The Ball / Lockout Valve shuts off downstream line pressure in the closed position with a 90° turn of the handle. In the closed position, inlet air pressure is blocked and downstream / system air is exhausted through a threaded port. To prevent unauthorized adjustment, the padlock slide may be assembled on either side. It is recommended that this slide is installed after final system assembly.

The Safety Lockout valves conform to OSHA #29 CFR part 1910 — control of hazardous energy source (lockout / tagout).

Note: This padlock slide is a permanent assembly and may not be removed later, any unauthorized tampering will void any warranty claims. The valve can only be locked in the closed position.

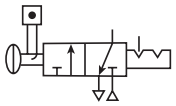

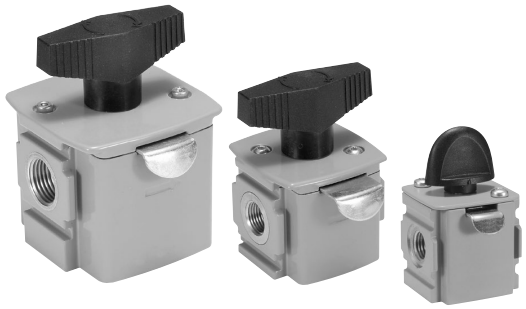

Operating information

Operating temperature:		-40°C to 80°C (-40°F to 176°F)
Pressure supply (max):		250 psig (17 bar)
Port size: BSPP / BSPT / NPT		1/4, 3/8, 1/2, 3/4
Weight:	P31	0.33 lbs (0.15 kg)
	P32	0.79 lbs (0.36 kg)
	P33	1.21 lbs (0.55 kg)

Ordering Information

Model Type	Port Size	Exhaust Port	Thread Type	Flow scfm (dm^3/s, ANR)	Modular Ball Valve Flow from Left to Right
P31	1/4"	1/4"	NPT	42.4 (20)	**P31VB92LBNN**
P32	3/8"	1/4"	NPT	190.7 (90)	**P32VB93LBNN**
	1/2"	1/4"	NPT	258.5 (122)	**P32VB94LBNN**
P33	1/2"	1/2"	NPT	561.5 (265)	**P33VB94LBNN**
	3/4"	1/2"	NPT	678 (320)	**P33VB96LBNN**

* Lockout tab and muffler supplied with unit.

For thread type: BSPP **1**, BSPT **2**, NPT **9**

Material Specifications

Body	Aluminum
Seals	PTFE
Ball	Stainless Steel
Lockout Tab	Zinc Plated Steel
Screw	Zinc Plated Steel

Dimensions inches (mm)

P31

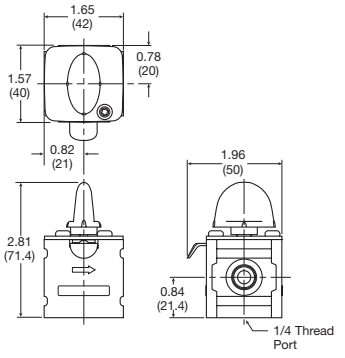

P32

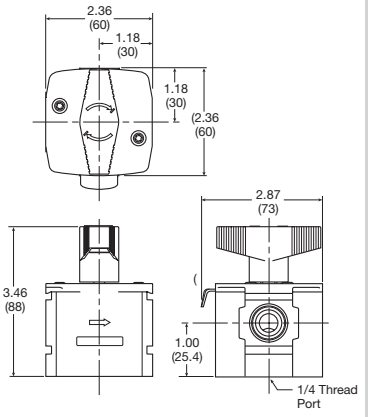

P33

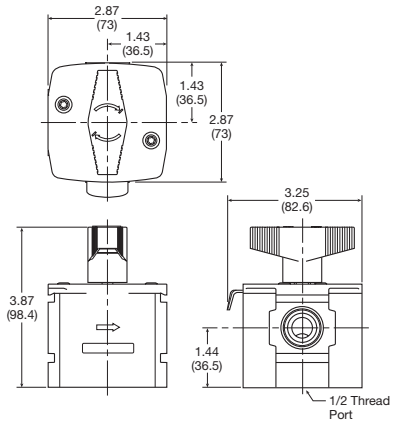

Most popular.

For inventory, lead times, and kit lookup, visit www.pdnplu.com

Parker Hannifin Corporation
Pneumatic Division
Richland, Michigan
www.parker.com/pneumatics

Manifold Blocks

- Available in 1/4" or 3/4" threaded inlet / outlet ports
- Two additional top and bottom auxiliary ports standard
- Can be mounted anywhere in the FRL system

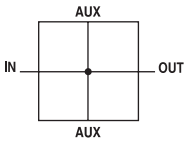

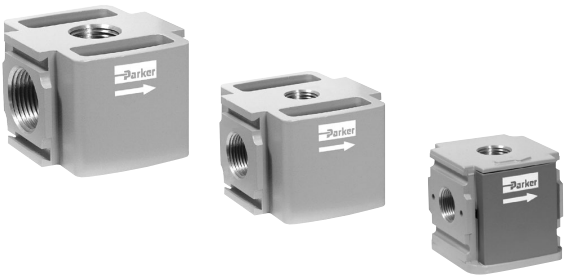

Ordering Information

Model Type	In / Out Port Size	Auxiliary Port Size Top	Auxiliary Port Size Bottom	Thread Type	Part Number
P31	1/4"	1/4"	1/4"	NPT	**P31MA92022N**
P32	1/2"	1/4"	1/2"	NPT	**P32MA94024N**
P33	3/4"	1/4"	1/2"	NPT	**P33MA96024N**

For thread type: BSPP **1**
BSPT **2**
NPT **9**

Operating information

Operating temperature:		-40°F to 150°F (-40°C to 65.5°C)
Pressure supply (max):		300 psig (20.7 bar)
Weight:	P31	0.26 lbs (0.12 kg)
	P32	0.45 lbs (0.20 kg)
	P33	0.45 lbs (0.20 kg)

Material Specifications

Body	Aluminum

Dimensions inches (mm)

P31

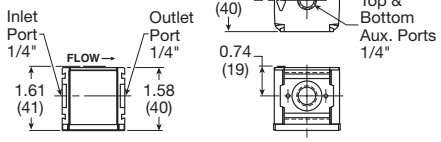

P32

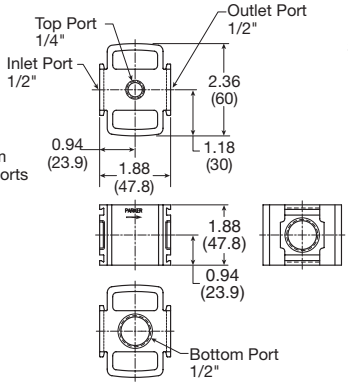

P33

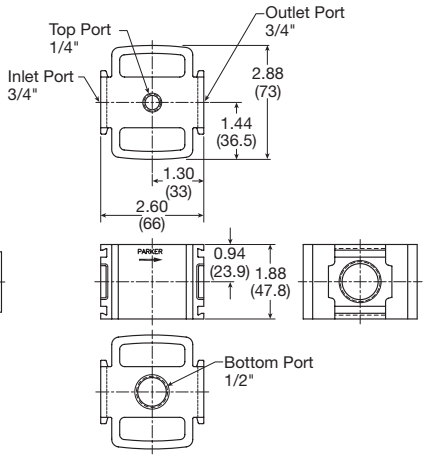

Most popular.

For inventory, lead times, and kit lookup, visit www.pdnplu.com

Parker Hannifin Corporation
Pneumatic Division
Richland, Michigan
www.parker.com/pneumatics

Tel: +45 63 12 83 00 | Email: ps@hymatik.com | www.hymatik.com | Hvidkaervej 27a, DK-5250 Odense SV, Denmark

PPS1 Pressure Switch

- Long life elastomer diaphragm
- High quality snap action switch
- Field adjustable
- Compact design
- Easily customized
- Quick delivery
- NEMA 4, 13

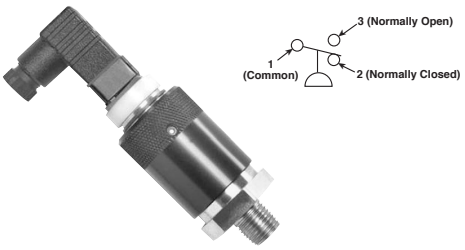

Definitions and Terminology

Repeatability — Accuracy is the maximum allowable set point deviation of a single pressure or temperature switch under one given set of environmental and operational conditions.

Single Pole Double Throw (SPDT) Switching element — A SPDT switching element has one normally open, one normally closed and one common terminal. Three terminals mean that the switch can be wired with the circuit either normally open (NO), or normally closed (NC), or both.

Dead Band — The dead band, sometimes referred to as "differential" or "hysteresis", is the change in pressure between actuation and deactuation set points.

Operating information

Temperature range:	-40°F to 105°F (-40°C to 220°C)
Operating pressure range:	1, 2, 3 - 250 PSI (17.2 bar) 4 - 2000 PSI (137.9 bar)
Set point tolerance	±1 PSI or 5% (.07 bar)
Deadband	10 - 20% of set pressure
Current rating	3A @ 125 VAC 2A @ 30 VDC (Resistive)
Circuit form	SPDT Standard
Cycle life	1 Million

Ordering Information:

PPS1 - 1 C 3 - R HM

Thread	
1/4" NPT Male	1
1/8" NPT Male	2
1/4" BSPP Male	17
1/8" BSPP Male	18

Circuit	
SPDT	C

Range*	
1	3-10 PSI
2	6-30 PSI
3	20-120 PSI
4†	100-400 PSI

† Only available in 1/4" NPT

Set Point Direction	
R	Rising

Electrical Connection	
HM	DIN 9.4mm
WL	Wire Leads 18"

* Factory setting for calibration purposes
Range 1 = 6 PSI
Range 2 = 18 PSI
Range 3 = 70 PSI
Range 4 = 250 PSI

Note: Switch is field adjustable.

Material Specifications

Adjustment knob	Anodized aluminum
Body	Brass
Diaphragm	Nitrile

Operation

The pressure switch monitors the air pressure in your pneumatic system. When the pressure in your system either drops below or exceeds the set point pressure, an electrical output is given.

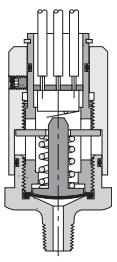

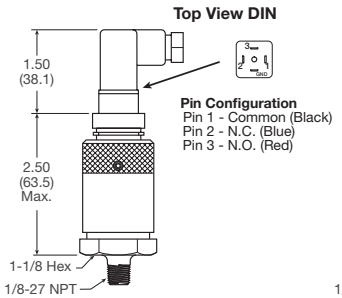

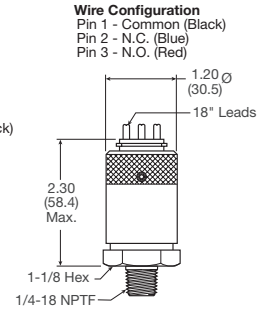

For inventory, lead times, and kit lookup, visit www.pdnplu.com

Parker Hannifin Corporation
Pneumatic Division
Richland, Michigan
www.parker.com/pneumatics

P31 Accessories

C-Bracket
(Fits to filter and lubricator body)

P31KA00MW



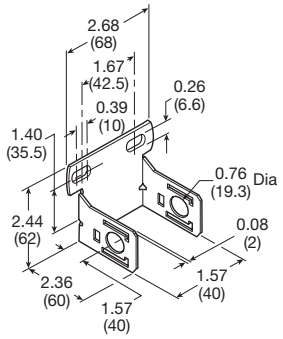

T-Bracket w/ Body Connector
(O-ring not shown)

P31KA00MT



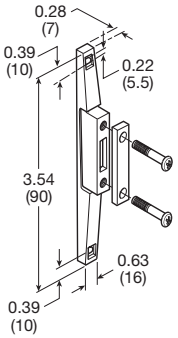

Body Connector
(O-ring not shown)

P31KA00CB



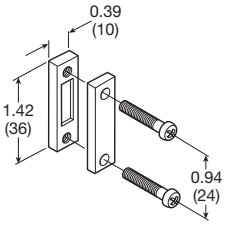

Port Block Kit
(O-ring not shown)

1/8 NPT **P31KA91CP**	1/8 BSPT **P31KA21CP**
1/4 NPT **P31KA92CP**	1/4 BSPT **P31KA22CP**
3/8 NPT **P31KA93CP**	3/8 BSPT **P31KA23CP**
1/8 BSPP **P31KA11CP**	
1/4 BSPP **P31KA12CP**	
3/8 BSPP **P31KA13CP**	



Port Block Kit w/ T-Bracket
(O-ring not shown)

1/8 NPT **P31KA91CN**	1/8 BSPT **P31KA21CN**
1/4 NPT **P31KA92CN**	1/4 BSPT **P31KA22CN**
3/8 NPT **P31KA93CN**	3/8 BSPT **P31KA23CN**
1/8 BSPP **P31KA11CN**	
1/4 BSPP **P31KA12CN**	
3/8 BSPP **P31KA13CN**	



Angle Bracket
(Fits to regulator and filter/regulator body)

P31KB00MR



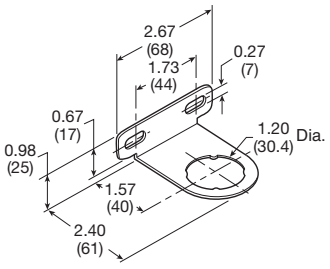

For inventory, lead times, and kit lookup, visit www.pdnplu.com

Parker Hannifin Corporation
Pneumatic Division
Richland, Michigan
www.parker.com/pneumatics

Tel: +45 63 12 83 00 | Email: ps@hymatik.com | www.hymatik.com | Hvidkaervej 27a, DK-5250 Odense SV, Denmark

P32 Accessories

T-Bracket w/ Body Connector

P32KA00MT

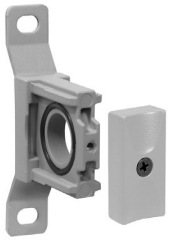

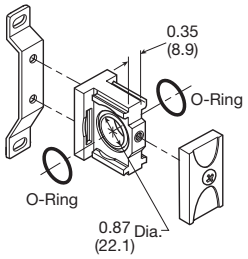

Body Connector

P32KA00CB



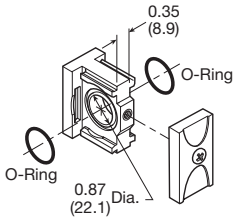

Port Block Kit

1/4 NPT	**P32KA92CP**	1/4 BSPT	**P32KA22CP**
3/8 NPT	**P32KA93CP**	3/8 BSPT	**P32KA23CP**
1/2 NPT	**P32KA94CP**	1/2 BSPT	**P32KA24CP**
3/4 NPT	**P32KA96CP**	3/4 BSPT	**P32KA26CP**
1/4 BSPP	**P32KA12CP**		
3/8 BSPP	**P32KA13CP**		
1/2 BSPP	**P32KA14CP**		
3/4 BSPP	**P32KA16CP**		

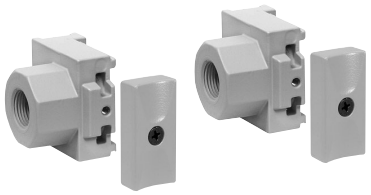

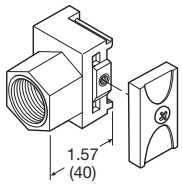

Angle Bracket

(Fits to regulator and filter/regulator bonnet)

P32KB00MR



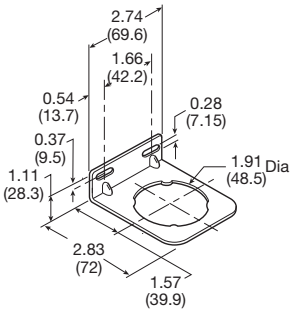

L-Bracket

(Fits to filter and lubricator body)

P32KA00ML



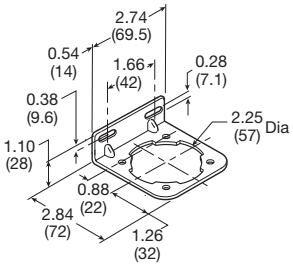

T-Bracket

(fits to body connector or port block)

P32KA00MB



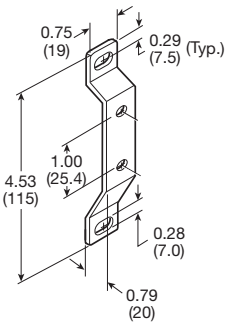

For inventory, lead times, and kit lookup, visit www.pdnplu.com

Parker Hannifin Corporation
Pneumatic Division
Richland, Michigan
www.parker.com/pneumatics

Tel: +45 63 12 83 00 | Email: ps@hymatik.com | www.hymatik.com | Hvidkaervej 27a, DK-5250 Odense SV, Denmark

P33 Accessories

T-Bracket w/ Body Connector
P32KA00MT

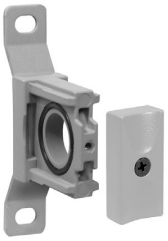

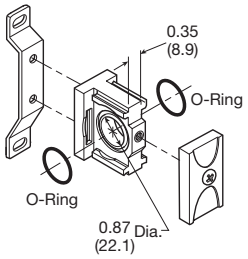

Body Connector
P32KA00CB



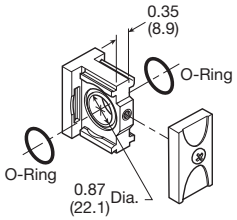

Port Block Kit

1/4 NPT	**P32KA92CP**	1/4 BSPT	**P32KA22CP**
3/8 NPT	**P32KA93CP**	3/8 BSPT	**P32KA23CP**
1/2 NPT	**P32KA94CP**	1/2 BSPT	**P32KA24CP**
3/4 NPT	**P32KA96CP**	3/4 BSPT	**P32KA26CP**
1/4 BSPP	**P32KA12CP**		
3/8 BSPP	**P32KA13CP**		
1/2 BSPP	**P32KA14CP**		
3/4 BSPP	**P32KA16CP**		



Angle Bracket
(Fits to regulator and filter/regulator bonnet)

P33KA00MR



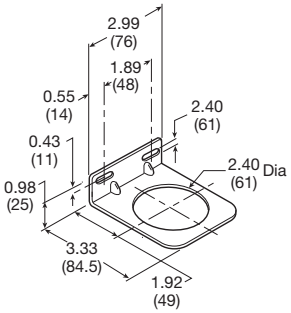

L-Bracket
(Fits to filter and lubricator body)

P33KA00ML



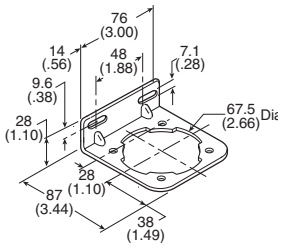

T-Bracket
(fits to body connector or port block)

P32KA00MB



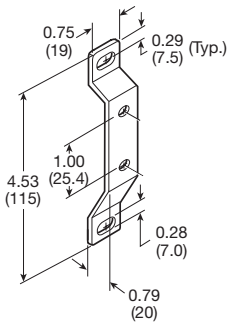

For inventory, lead times, and kit lookup, visit www.pdnplu.com

Parker Hannifin Corporation
Pneumatic Division
Richland, Michigan
www.parker.com/pneumatics

Tel: +45 63 12 83 00 | Email: ps@hymatik.com | www.hymatik.com | Hvidkaervej 27a, DK-5250 Odense SV, Denmark

Series	Description	Part number	
P31 P32 P33	Panel Mount Nut (Plastic)	**P31KA00MP** **P32KA00MP** **P33KA00MP**	
P31 P32 P33	Panel Mount Nut (Aluminum)	**P31KA00MM** **P32KA00MM** **P33KA00MM**	
P31 P32 P33	5µ Element Kit	**P31KA00ESE** **P32KA00ESE** **P33KA00ESE**	
P31 P32 P33	1µ Element Kit	**P31KA00ES9** **P32KA00ES9** **P33KA00ES9**	
P31 P32 P33	0.01µ Element Kit	**P31KA00ESC** **P32KA00ESC** **P33KA00ESC**	
P31 P32 P33	Adsorber Element Kit	**P31KA00ESA** **P32KA00ESA** **P33KA00ESA**	
P32 / P33	Auto Drain Kit	**P32KA00DA**	
P31 P32 / P33	Differential Pressure Indicator Kit	**P31KB00RQ** **P32KA00RQ**	
P31 / P32 / P33	Drip Control Assembly Kit	**P32KA00PH**	
P31 P32 / P33	Fill Plug Kit	**P31KA00PL** **P32KA00PL**	
P31 P32 P33	Lubricator - Plastic Bowl w/ Bowl Guard No Drain	**P31KB00BGN** **P32KB00BGN** **P33KA00BGN**	

Tel: +45 63 12 83 00 | Email: ps@hymatik.com | www.hymatik.com | Hvidkaervej 27a, DK-5250 Odense SV, Denmark

Series	Description	Part number	
P31 P32 P33	Lubricator - Metal Bowl w/o Sight Gauge No Drain	**P31KB00BMN** **P32KB00BMN** **P33KA00BMN**	
P32 P33	Lubricator - Metal Bowl w/ Sight Gauge No Drain	**P32KB00BSN** **P33KA00BSN**	
P31 P32 P33	Metal Bowl w/o Sight Gauge & Manual Drain	**P31KB00BMM** **P32KB00BMM** **P33KA00BMM**	
P31	Metal Bowl w/o Sight Gauge & Pulse Drain	**P31KB00BMB**	
P32 P33	Metal Bowl w/o Sight Gauge & Auto Drain	**P32KB00BMA** **P33KA00BMA**	
P32 P33	Metal Bowl w/ Sight Gauge & Manual Drain	**P32KB00BSM** **P33KA00BSM**	
P32 P33	Metal Bowl w/ Sight Gauge & Auto Drain	**P32KB00BSA** **P33KA00BSA**	
P31 P32 P33	Plastic Bowl w/ Bowl Guard & Manual Drain	**P31KB00BGM** **P32KB00BGM** **P33KA00BGM**	
P31	Plastic Bowl w/ Bowl Guard & Pulse Drain	**P31KB00BGB**	
P32 P33	Plastic Bowl w/ Bowl Guard & Auto Drain	**P32KB00BGA** **P33KA00BGA**	
P31 P32 P33	Regulator - Relieving Repair Kit	**P31KB00RB** **P32KB00RB** **P33KA00RB**	
P31 P32 P33	Regulator - Non-Relieving Repair Kit	**P31KB00RC** **P32KB00RC** **P33KA00RC**	

Series	Description	Connection		Part number	
P31 P32 P33	Regulator - Main Adjusting Spring 0-30 psig (0-2 bar) Kit			**P31KB00PR** **P32KB00PR** **P33KA00PR**	
P31 P32 P33	Regulator - Main Adjusting Spring 0-60 psig (0-4.1 bar) Kit			**P31KB00PS** **P32KB00PS** **P33KA00PS**	
P31 P32 P33	Regulator - Main Adjusting Spring 0-125 psig (0-8.6 bar) Kit			**P31KB00PT** **P32KB00PT** **P33KA00PT**	
P31 P32 P33	Regulator - Main Adjusting Spring 0-250 psig (0-17 bar) Kit			**P31KB00PV** **P32KB00PV** **P33KA00PV**	
P31	Square Flush Mounting Gauge Kit	0-60 psig 0-160 psig 0-4 bar 0-11 bar		**K4511SCR060** **K4511SCR160** **K4511SCR04B** **K4511SCR11B**	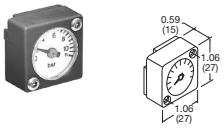
P31 / P32	Square Mounting Gauge with Adapter Kit	0-60 psig 0-160 psig 0-4 bar 0-11 bar		**P6G-PR90060** **P6G-PR90160** **P6G-PR10040** **P6G-PR10110**	
P31	1" Round Gauge	0-60 psig / 0-4.1 bar 0-160 psig / 0-10 bar	1/8" 1/8"	**K4510N18060** **K4510N18160**	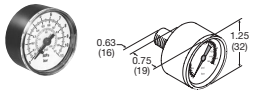
P31	40mm Round Gauge	0-30 psig / 0-2 bar 0-60 psig / 0-4.1 bar 0-160 psig / 0-10 bar	1/8" 1/8" 1/8"	**K4515N18030** **K4515N18060** **K4515N18160**	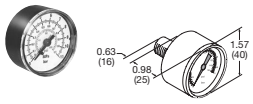
P32 / P33	50mm Round Gauge	0-30 psig / 0-2 bar 0-60 psig / 0-4.1 bar 0-160 psig / 0-10 bar 0-300 psig / 0-20 bar	1/4" 1/4" 1/4" 1/4"	**K4520N14030** **K4520N14060** **K4520N14160** **K4520N14300**	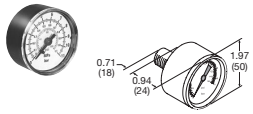
P31 P32 / P33	Body Connector O-ring (Replacement kit) (Pack of 10)			**P31KA00CY** **P32KA00CY**	
P31 P32	Tamperproof Knob Kit			**P31KB00AT** **P32KB00AT**	
P31 P32	Tamperproof Lockable Kit			**P31KB00AL** **P32KB00AL**	

For inventory, lead times, and kit lookup, visit www.pdnplu.com

Parker Hannifin Corporation
Pneumatic Division
Richland, Michigan
www.parker.com/pneumatics

Tel: +45 63 12 83 00 | Email: ps@hymatik.com | www.hymatik.com | Hvidkaervej 27a, DK-5250 Odense SV, Denmark

Solenoid Operators - CNOMO

Solenoid operators, coil combinations

	NC Normal Operator with 22 x 30 standard coil	NC Normal Operator with 30 x 30 standard coil
Working pressure	0 to 10 bar	0 to 10 bar
Ambient temperature	-10°C to 60°C *	-10°C to 60°C *
Power (DC)	4.8W	2.7W
Power (AC)	8.5VA	4.9VA
Voltage tolerance	+/-10%	+/-10%
Duty cycle	100%	100%
Insulation class	F	F
Electric connection	B Industrial	DIN 43650A
Protection	IP65	IP65
Approval		UL/CSA
Working media	All neutral media such as compressed air	

* Limited to 50°C if use with 100% duty cycle

P31 Series only - Solenoid coils 15mm NC

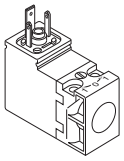

Voltage	Order code Override, blue, non-locking flush	Weight (kg)
24VDC	**PS2982B49P**	0.038
115VAC 50Hz / 120VAC 60Hz	**PS2982B53P**	0.038

Solenoid Coils with M12 Connection

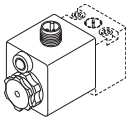

Voltage	Part number	Weight (kg)
Direct current		
24VDC	**P2FC6449**	0.065

Transients

Interrupting the current through the solenoid coil produces momentary voltage peaks which, under unfavorable conditions, can amount to several hundred times the rated operating voltage. Normally, these transients do not cause problems, but to achieve the Maximum life of relays in the circuit (and particularly of transistors, thyristors and integrated circuits) it is desirable to provide protection by means of voltage-dependent resistors (varistors). All connectors/cable plugs EN175301-803 with LED's include this type of circuit protection.

Materials

Pilot Valve

Body:	Polyamide
Armature tube:	Brass
Plunger & core:	Corrosion resistant Cr-Ni steel
Seals:	Fluorocarbon
Screws:	Stainless steel

Coil

Encapsulation material:	Thermoplastic as standard Duroplast for M12 connection

Spare Base Solenoid Pilot Operator CNOMO NC

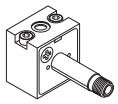

Description	Part number non-lock manual override	Weight (kg)
Standard Duty	**P2FP23N4B**	0.065
No Override	**P2FP23N4A**	0.065

Note: Solenoid pilot operators are fitted to the Global range. Order the above part numbers for spares. The operators are supplied with mounting screws and interface 'O' rings. Coils and connectors must be ordered separately.

Solenoid Coils with DIN A or Industrial B Connection

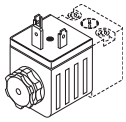

Voltage	22mm x 30mm Part number B industrial standard	Weight (kg)	30mm x 30mm Part number DIN 43650A standard	Weight (kg)
Direct current				
24VDC	**P2FCB449**	0.093	**P2FCA449**	0.105
Alternative current				
110V 50Hz, 120V 60Hz	**P2FCB453**	0.093	**P2FCA453**	0.105

☐ Most popular.

Solenoid Connectors / Cable Plugs EN175301-803

	Description	Part number 22mm Form B Industrial	Part number 30mm Form A DIN 43650A
With standard screw 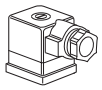	Standard IP65 without flying lead	**PS2429BP**	**PS2028BP**
	With LED and protection 24VAC/DC	**PS243079BP**	**PS203279BP**
	With LED and protection 110VAC	**PS243083BP**	**PS203283BP**
With cable 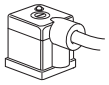	Standard with 2m cable IP65	**PS2429JBP**	**PS2028JCP**
	24VAC/DC, 2m cable LED and protection IP65	**PS2430J79BP**	**PS2032J79CP**
	110VAC/DC, 2m cable LED and protection IP65	**PS2430J83BP**	**PS2032J83CP**

Solenoid coil dimensions inches (mm)

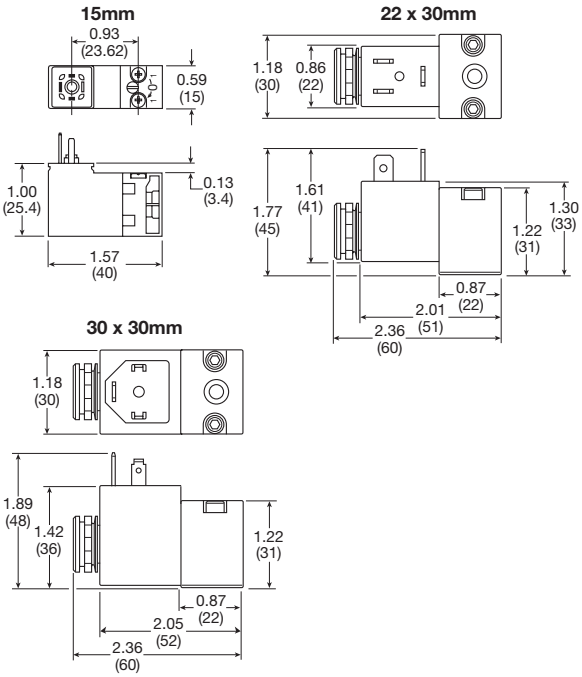

Electrical schematics

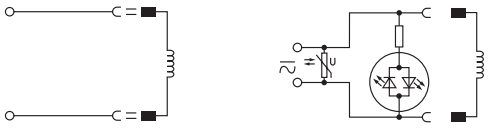

PS2028BP	**PS243079BP**	**PS203279BP**
PS2028JBP	**PS2430J79BP**	**PS2032J79CP**
PS2429BP	**PS243083BP**	**PS203283BP**
PS2429JBP	**PS2430J83BP**	**PS2032J83CP**
PS2932BP	**PS294679BP**	**PS294683BP**
PS2932JBP	**PS2946J79BP**	**PS2946J83BP**

Cable plug dimensions inches (mm)

22mm Form B Industrial Cable plugs	PS2429BP

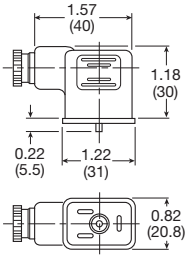

30mm DIN 43650A Cable plugs	PS2028BP

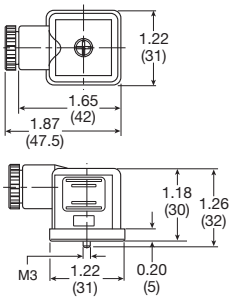

☐ Most popular.

Tel: +45 63 12 83 00 | Email: ps@hymatik.com | www.hymatik.com | Hvidkaervej 27a, DK-5250 Odense SV, Denmark



Air Preparation Products
P3Y Series

Introduction	C3
Particulate Filters	C4-C5
Coalescing Filters	C6-C7
Regulators	C8-C11
Proportional Pressure Regulator	C12-C13
Filter / Regulators	C14-C15
Lubricators	C16-C17
Combinations	C18-C19
Soft Start / Dump Valves	C20-C22
Accessories	C23-C27

Parker Hannifin Corporation
Pneumatic Division
Richland, Michigan
www.parker.com/pneumatics

Tel: +45 63 12 83 00 | Email: ps@hymatik.com | www.hymatik.com | Hvidkaervej 27a, DK-5250 Odense SV, Denmark

Parker Hannifin Corporation
Pneumatic Division
Richland, Michigan
www.parker.com/pneumatics

Tel: +45 63 12 83 00 | Email: ps@hymatik.com | www.hymatik.com | Hvidkaervej 27a, DK-5250 Odense SV, Denmark

C
P3Y Products

P3Y System

The P3Y system allows units to be connected together without the use of pipe connectors. This saves space, provides constant mounting centers, and maintains a modern aesthetically pleasing appearance.

The P3Y filters are specially designed to efficiently filter out rust, dirt, moisture and other impurities from compressed air lines. Operation is fully automatic with a minimum of pressure drop. Coalescing filters and adsorber filters for high purity air are also included in the P3Y series.

The P3Y regulators are designed to provide quick response and accurate pressure regulation for the most demanding hi-flow industrial applications.

The rolling diaphragm was designed for long trouble-free operation and will not rupture or tear under high cycle or demanding applications. The P3Y mist lubricators are designed to provide lubrication for many general purpose applications.

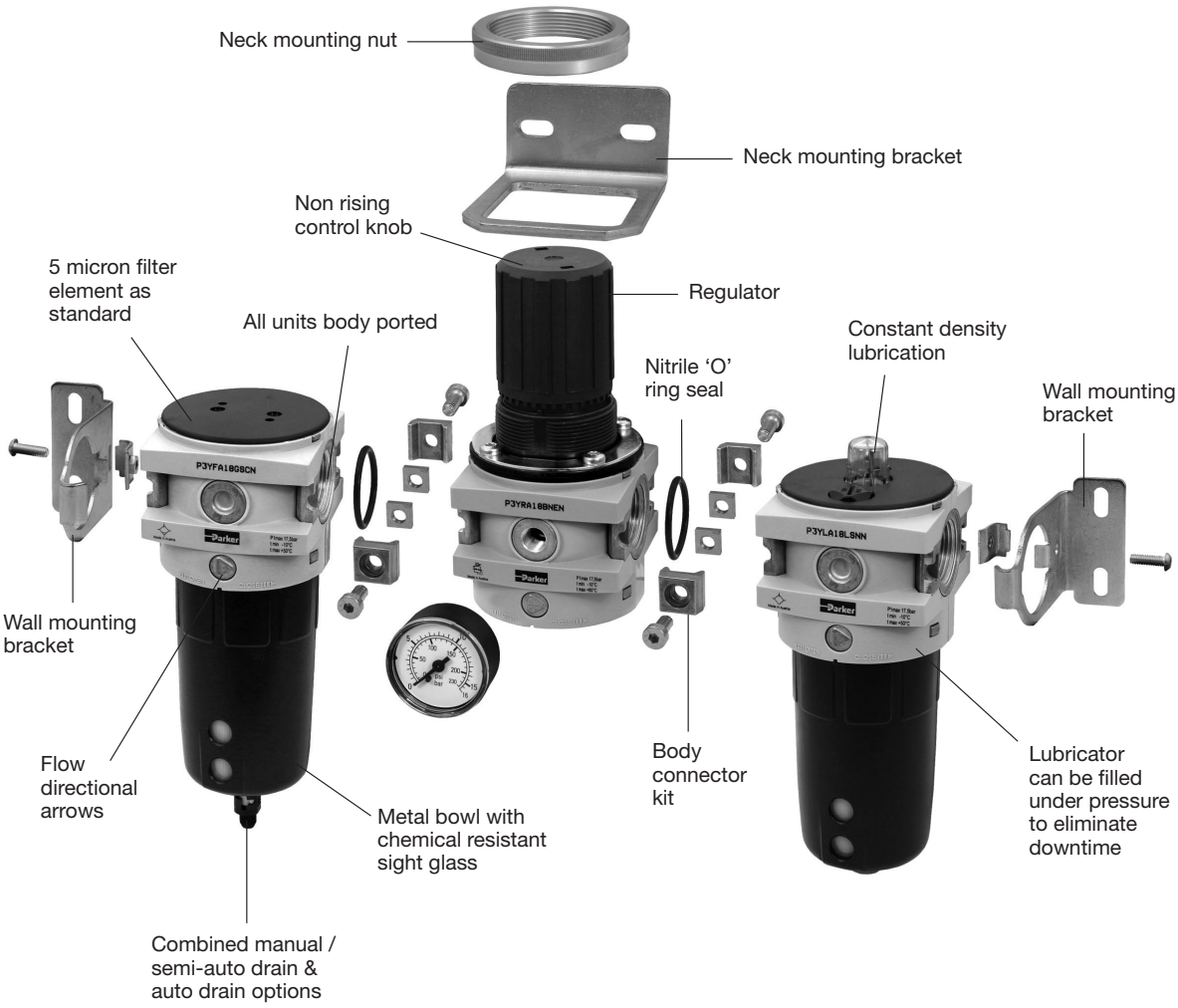

Tel: +45 63 12 83 00 | Email: ps@hymatik.com | www.hymatik.com | Hvidkaervej 27a, DK-5250 Odense SV, Denmark

P3Y Particulate Filter

- Integral 3/4" or 1" ports (NPT & BSPP)
- High efficiency particulate element as standard
- Excellent water removal efficiency
- Robust but lightweight aluminium construction
- Low temperature -40°C (-40°F) with combined manual / semi-auto drain as standard

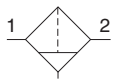

Manual drain



Auto drain



Port Size	Description	Part Number
3/4"	Combined Manual /Semi-Auto Drain	**P3YFA96ESCN**
3/4"	Auto Drain	**P3YFA96ESAN**
1"	Combined Manual /Semi Auto Drain	**P3YFA98ESCN**
1"	Auto Drain	**P3YFA98ESAN**

Operating information

Supply pressure (max)*:		254 psig (17.5 bar)
Operating temperature:		
Auto drain		14°F to 140°F (-10°C to 60°C)
Combined drain		-40°F to 140°F (-40°C to 60°C)
Standard filtration		5 micron
Manual / semi-auto drain:		Closed at 11.6 psig (0.8 bar) G1/8 thread male
Auto drain bowl pressure:		Closed at 11.6 psig (0.8 bar)
Bowl capacity:		4.4 US oz. (130 cm^3)
Standard filtration:		5 micron
Flow capacity†:	3/4"	170 scfm (80.2 dm^3/s, ANR)
	1"	170 scfm (80.2 dm^3/s, ANR)
Fluid:		Compressed air
Weight:		1.98 lb (0.9 kg)

† Inlet pressure 91.4 psig (6.3 bar) inlet pressure and 7.3 psig (0.5 bar) pressure drop.

* Air supply must be dry enough to avoid ice formation at temperatures below 35.6°F (2°C).

Air quality:
Within ISO 8573-1: 1991 Class 3 and 5 (Particulates)
Within ISO 8573-1: 2001 Class 6 and 7 (Particulates)

Ordering Information:

P3YFA | **9** | **6** | **E** | **SC** | **N**

Basic Series	
Filter	P3YFA

Thread Type*	
BSPP	1
NPT	9

Port Size	
3/4	6
1	8

Element	
E	5 Micron

Drain Type	
SC	Combined Manual / Semi-Auto Drain
SA	Auto Drain

*** Note:** For 1-1/2" ported unit, please order P3YKA*BCP port block kit separately.

☐ Most popular.

Material specifications

Body	Aluminium
Sight glass and bowl	Polypropylene
Body cover	ABS
Element	Sintered P.E.
Seals	Nitrile NBR
Manual / semi-auto drain	Acetal
Automatic drain	PA / Ø 10mm brass connection

Repair and Service Kits

5 micron element kit	**P3YKA00ESE**
40 micron element kit	**P3YKA00ESG**
Bowl kit with combined manual / semi auto drain	**P3YKA00BSC**
Bowl kit with auto drain	**P3YKA00BSA**

Flow characteristics

(3/4") Filter

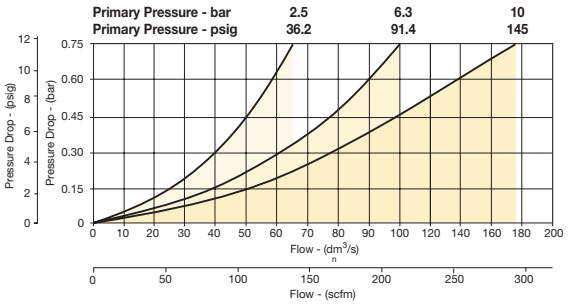

(1") Filter

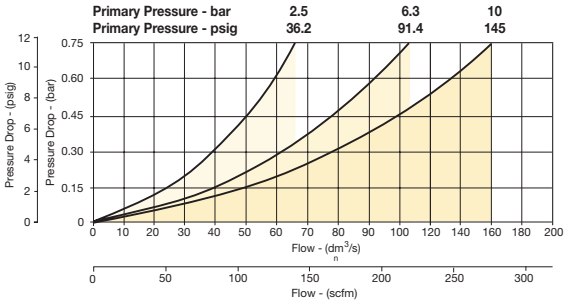

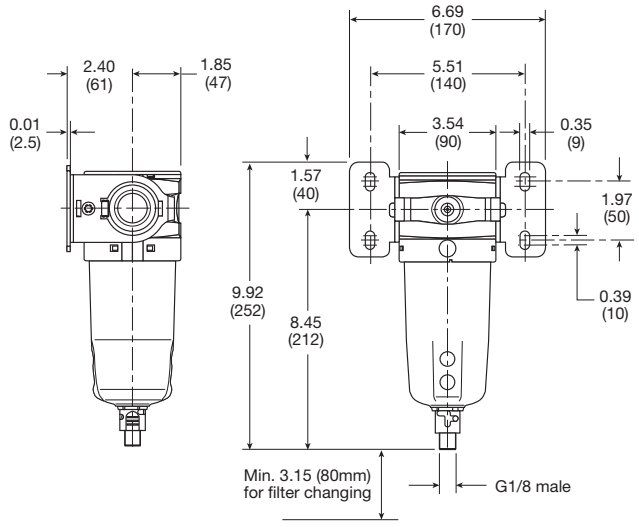

Inches (mm)

P3Y Coalescing Filter

- Extended high efficiency filter element provides greater filtration surface area.
- Integral 3/4" or 1" ports (BSPP & NPT)
- Removes liquid aerosols and sub micron particles
- Oil free air for critical applications, such as air gauging, pneumatic instrumentation and control
- Adsorber activated carbon element removes oil vapors and most hydrocarbons
- Robust but lightweight aluminum construction

Notes: To optimize the life of the coalescing element, it is advisable to install a P3YFA pre-filter with a 5 micron element upstream of the coalescing filter.

To optimize the life of the adsorber element, it is advisable to install a P3Y coalescing 0.01 micron filter upstream of the adsorber filter.



Port Size	Description	Part Number
3/4"	Coalescing Filter 0.01 Micron, Combined Manual / Semi-Auto Drain	**P3YFA96DSCN**
3/4"	Coalescing Filter 0.01 Micron, Auto Drain	**P3YFA96DSAN**
1"	Coalescing Filter 0.01 Micron, Combined Manual / Semi-Auto Drain	**P3YFA98DSCN**
1"	Coalescing Filter 0.01 Micron, Auto Drain	**P3YFA98DSAN**

Operating information

Supply pressure (max)*:		254 psig (17.5 bar)
Operating temperature:		14°F to 140°F (-10°C to 60°C)
Manual / auto drain:		Closed at 11.6 psig (0.8 bar) G1/8 thread male
Media specifications: Adsorber, max oil carryover		0.008 mg/m³ (PPM w/w)
Bowl capacity:		4.4 US oz. (130 cm³)
Standard filtration:		0.01 micron
Flow capacity†:	3/4" 1"	275 scfm (176.9 dm³/s, ANR) 307 scfm (144.8 dm³/s, ANR)
Fluid:		Compressed air
Weight:		3.5 lb (1.6 kg)

† Inlet pressure 91.4 psig (6.3 bar) inlet pressure and 7.3 psig (0.5 bar) pressure.

* Air supply must be dry enough to avoid ice formation at temperatures below 35.6°F (2°C).

Ordering Information:

P3YFA **9** **6** **D** **SC** **N**

Basic Series	
Coalescing Filter	P3YFA

Thread Type*	
BSPP	1
NPT	9

Port Size	
3/4	6
1	8

Element	
D	0.01 Micron Element with DPI Standard
A	Adsorber

Drain Type	
SC	Combined Manual / Semi Auto Drain
SA	Auto Drain

*** Note:** For 1-1/2" ported unit, please order P3YKA*BCP port block kit separately.

☐ Most popular.

For inventory, lead times, and kit lookup, visit www.pdnplu.com

Parker Hannifin Corporation
Pneumatic Division
Richland, Michigan
www.parker.com/pneumatics

Tel: +45 63 12 83 00 | Email: ps@hymatik.com | www.hymatik.com | Hvidkaervej 27a, DK-5250 Odense SV, Denmark

Material specifications

Body	Aluminium
Sight glass and bowl	Polypropylene
Filter cover	ABS
Coalescing element	Borosilicate & nano fibers
Top & bottom end cap (coalescing)	Aluminium
Adsorber element	Activated carbon
Top & bottom end cap (adsorber)	Glass filled nylon
Support cylinders	Grade 430 stainless steel
Support media	Polypropylene
Anti re-entrainment barrier	Polyester
Encapsulation	Epoxy resin / hardener
Seals	Nitrile NBR
Manual / semi-auto drain	Acetal
Auto drain	PA / Ø 10mm brass connection
Differential pressure indicator, body	Acetal
Differential pressure indicator, internal parts	Acetal
Differential pressure indicator, spring	Stainless steel
Differential pressure indicator, seals	Nitrile NBR
Differential pressure indicator, support plate	ABS
Differential pressure indicator, screws	Steel / zinc plated

Repair and Service Kits

0.01 micron element kit	**P3YKA00ESC**
Adsorber element kit	**P3YKA00ESA**
Bowl kit with combined manual / semi auto drain	**P3YKA00BSC**
Bowl kit with auto drain	**P3YKA00BSA**
Differential pressure indicator kit	**P3YKA00RQ**

Flow characteristics

(3/4") 0.01 Micron Coalescing Filter Saturated

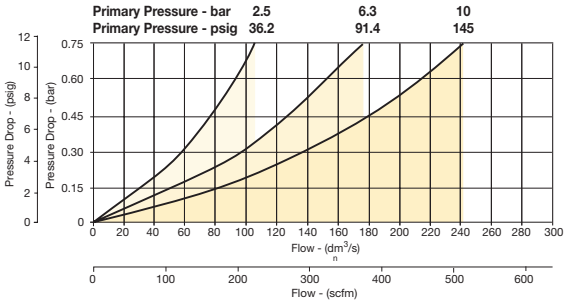

(1") 0.01 Micron Coalescing Filter Saturated

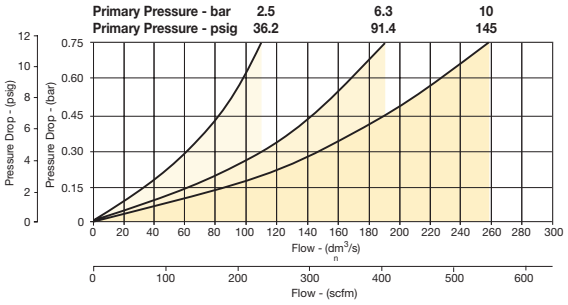

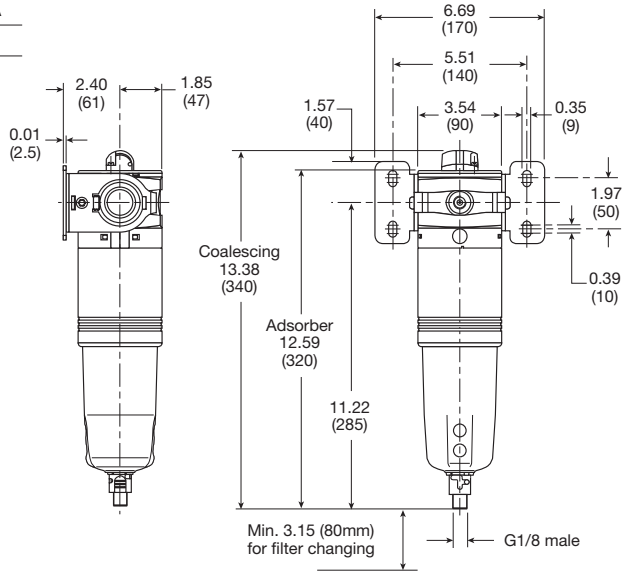

Inches (mm)

For inventory, lead times, and kit lookup, visit www.pdnplu.com

Parker Hannifin Corporation
Pneumatic Division
Richland, Michigan
www.parker.com/pneumatics

Tel: +45 63 12 83 00 | Email: ps@hymatik.com | www.hymatik.com | Hvidkaervej 27a, DK-5250 Odense SV, Denmark

P3Y Regulators

- Integral 3/4" or 1" ports (BSPP and NPT)
- Robust but lightweight aluminium construction
- Secondary pressure ranges 12 and 16 bar
- Rolling diaphragm for extended life
- Secondary aspiration plus rolling diaphragm provides quick response and accurate pressure regulation
- Optional tamperproof regulator padlock
- Reverse flow / relieving option
- Low temperature -40°C (-40°F)



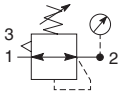

Self relieving regulator with gauge

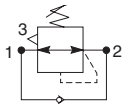

Reverse flow relieving regulator

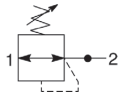

Non-relieving regulator

Port Size	Description	Part Number
3/4"	174 psig Relieving	**P3YRA96BNEN**
3/4"	174 psig Relieving + Pressure Gauge	**P3YRA96BNFN**
1"	174 psig Relieving	**P3YRA98BNEN**
1"	174 psig Relieving + Pressure Gauge	**P3YRA98BNFN**

Operating information

Supply pressure (max)*:		254 psig (17.5 bar)
Operating temperature:		-40°F to 140°F (-40°C to 60°C)
Flow capacity†:	3/4"	380 scfm (179.3 dm^3/s, ANR)
	1"	550 scfm (259.6 dm^3/s, ANR)
Fluid:		Compressed air
Gauge port (x2):		1/4"
Weight:		2.4 lb (1.08 kg)

† Inlet pressure 145 psig (10 bar) inlet pressure, 91.4 psig (6.3 bar) set pressure and 7.3 psig (0.5 bar) pressure drop.

* Air supply must be dry enough to avoid ice formation at temperatures below 35.6°F (2°C).

Ordering Information

P3YRA	9	6	B	N	E	N

Basic Series

Regulator	P3YRA

Thread Type*

BSPP	1
NPT	9

Port Size

3/4	6
1	8

Relief

B	Relieving
R	Reverse Flow / Relieving

Lockable

N	Standard
A†	Lockable

Adjustment Range

E	0 to 174 psi (0 to 12 bar), No Gauge
H	0 to 232 psi (0 to 16 bar), No Gauge
F	0 to 174 psi (0 to 12 bar), Gauge
J	0 to 232 psi (0 to 16 bar), Gauge

Notes:
* For 1-1/2" ported unit, please order P3YKA*BCP port block kit separately.
† Not field convertible.

☐ Most popular.

Tel: +45 63 12 83 00 | Email: ps@hymatik.com | www.hymatik.com | Hvidkaervej 27a, DK-5250 Odense SV, Denmark

Material specifications

Body	Aluminium
Bonnet	Glass filled polyamide
Regulator cover	ABS
Control knob	Glass filled polyamide
Valve	Brass / NBR
Seals	Nitrile NBR
Screws	Steel / zinc plated

Repair and Service Kits

Angle bracket + metal lock ring	**P3YKA00MS**
Panel mounting nut	**P3YKA00MM**
Diaphragm kit (relieving type)	**P3YKA00RR**
Diaphragm kit (non-relieving type)	**P3YKA00RN**
0 to 160 psig (0 to 10 bar), gauge 1/4" port	**K4520N14160**
0 to 300 psig (0 to 20 bar), gauge 1/4" port	**K4520N14300**

⚠ WARNING

Product rupture can cause serious injury.
Do not connect regulator to bottled gas.
Do not exceed Maximum primary pressure rating.

CAUTION:

REGULATOR PRESSURE ADJUSTMENT – The working range of knob adjustment is designed to permit outlet pressures within their full range. Pressure adjustment beyond this range is also possible because the knob is not a limiting device. This is a common characteristic of most industrial regulators, and limiting devices may be obtained only by special design. For best performance, regulated pressure should always be set by increasing the pressure up to the desired setting.

Flow characteristics

(3/4") Regulator

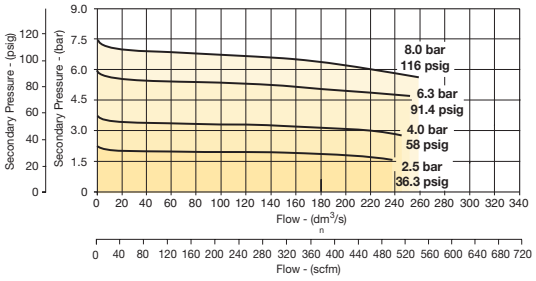

(1") Regulator

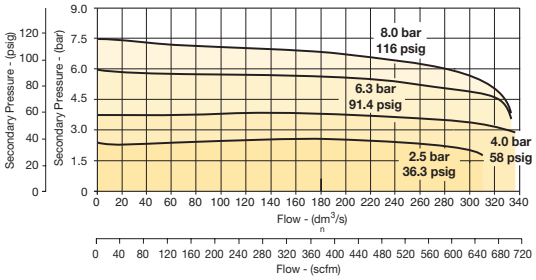

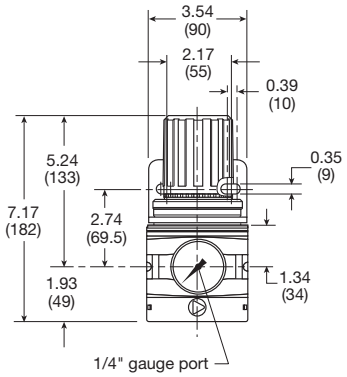

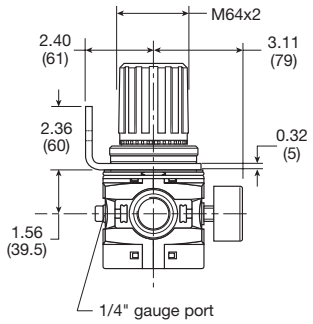

Inches (mm)

For inventory, lead times, and kit lookup, visit www.pdnplu.com

Parker Hannifin Corporation
Pneumatic Division
Richland, Michigan
www.parker.com/pneumatics

Tel: +45 63 12 83 00 | Email: ps@hymatik.com | www.hymatik.com | Hvidkaervej 27a, DK-5250 Odense SV, Denmark

P3Y Pilot Operated Regulator

- Integral 3/4" or 1" ports (BSPP & NPT)
- Pilot controlled regulators can be mounted “out of reach” with pilot regulator installed in a convenient location
- Constant pilot bleed control for accurate pressure control
- Balanced poppet provides quick response
- High flow



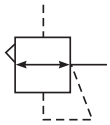

Port Size	Description	Part Number
3/4"	Pilot operated regulator	**P3YRA96BPPN**
1"	Pilot operated regulator	**P3YRA98BPPN**

Operating information

Supply pressure (max):		254 psig (17.5 bar)
Operating temperature:		-40°F to 140°F (-40°C to 60°C)
Flow capacity†:	3/4"	550 scfm (259.6 dm^3/s, ANR)
	1"	550 scfm (259.6 dm^3/s, ANR)
Fluid:		Compressed air
Weight:		2.6 lb (1.2 kg)

† Inlet pressure 145 psig (10 bar) inlet pressure, 91.4 psig (6.3 bar) set pressure and 7.3 psig (0.5 bar) pressure drop.

Ordering Information

P3YRA | **9** | **6** | **BPPN**

Basic Series		Thread Type*		Port Size	
Pilot Operated Regulator	P3YRA	BSPP	1	3/4	6
		NPT	9	1	8

*** Note:** For 1-1/2" ported unit, please order P3YKA*BCP port block kit separately.

☐ Most popular.

For inventory, lead times, and kit lookup, visit www.pdnplu.com

Parker Hannifin Corporation
Pneumatic Division
Richland, Michigan
www.parker.com/pneumatics

Tel: +45 63 12 83 00 | Email: ps@hymatik.com | www.hymatik.com | Hvidkaervej 27a, DK-5250 Odense SV, Denmark

Material specifications

Body	Aluminium
Body cover	ABS
Valve	Brass / NBR composite
Pilot valve booster	Aluminum
Seals	Nitrile NBR
Screws	Zinc plated steel

⚠ WARNING

Product rupture can cause serious injury.
Do not connect regulator to bottled gas.
Do not exceed Maximum primary pressure rating.

Flow characteristics

3/4" and 1" Pilot Regulator

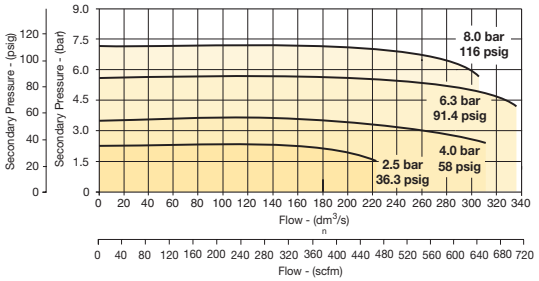

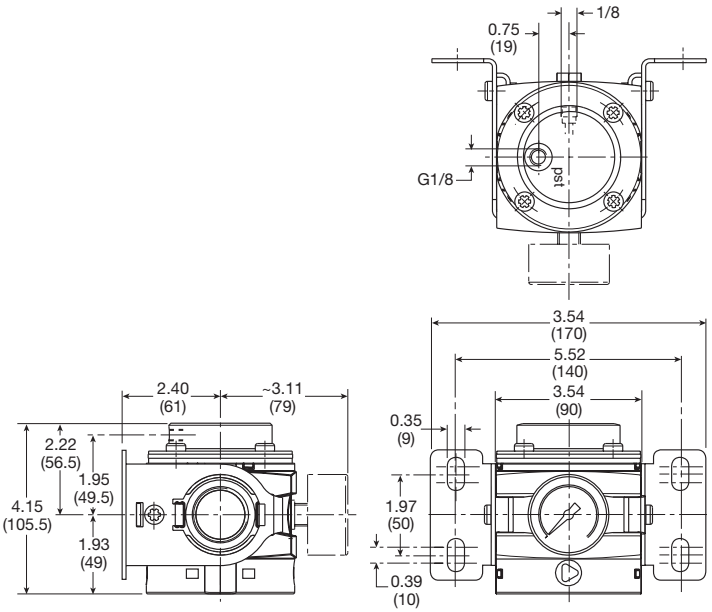

Inches (mm)

For inventory, lead times, and kit lookup, visit www.pdnplu.com

Parker Hannifin Corporation
Pneumatic Division
Richland, Michigan
www.parker.com/pneumatics

Tel: +45 63 12 83 00 | Email: ps@hymatik.com | www.hymatik.com | Hvidkaervej 27a, DK-5250 Odense SV, Denmark

P3Y Proportional Pressure Regulator

- Integral 3/4" or 1" ports (BSPP & NPT)
- Accurate output pressure
- Very fast response times
- Robust but lightweight design



Port Size	Description	Part Number
3/4"	Normally Closed, 0 - 10 bar (0 to 145 psig)	**P3YPA96BD2VA2A**
1"	Normally Closed, 0 - 10 bar (0 to 145 psig)	**P3YPA98BD2VA2A**

Operating information

Operating pressure: Inlet pressure [1]:	P^1 min P^1 max	14.5 psig (1 bar) 232 psig (16 bar)
Operating pressure: Outlet pressure	P^2 min P^2 max	2.9 psig (0.2 bar) 145 psig (10 bar)
Operating temperature:		32°F to 122°F (0°C to 50°C)
Flow capacity†:		706 scfm (33.2 dm^3/s, ANR) l/min 20000 m^3/h 1200
Hysteresis:	P^2 max	< 1%
Repeatability:	P^2 max	< 0.5%
Sensitivity:	P^2 max	< 0.5%
Linearity:	P^2 max	< 1%
Nominal voltage:		U_n V DC 24 V = ± 10%
Residual ripple:		10%

Power consumption:	I_{Bmax}	0.15 A
Set value input:	Uw I	V 0-10 mA 0-20 mA 4-20
Input resistance:	R_E	243 K Ω
Actual valve output:	Ux	0 - 10 V
Output current:	I_{Amax}	10 mA
Degree of protection:		IP65 to DIN 40050, EN 60529
Fluid:		Compressed air
Weight:		1.2 lb (2.7 kg)

[1]) $p^1 > p^2 + 10\%\ p^2$
[2]) at p^1 - 10 bar to p^2 - 6.3 bar

† Inlet pressure 91.4 psig (6.3 bar) inlet pressure and 7.3 psig (0.5 bar) pressure drop.

Ordering Information

P3YPA **9** **6** **B** **D** **2** **A** **A** **2** **A**

Basic Series	
Proportional Pressure Regulator	P3YPA

Thread Type*	
BSPP	1
NPT	9

Port Size	
3/4	6
1	8

Version	
Side Exhaust, NC (Normally closed)	B
Side Exhaust, NO (Normally open)	C

Pressure Range	
0-10 bar (0-145 psig)	D

Power Supply	
2	24 volts

Control Signal	
A	4-20 mA
V	0-10 V

Output Signal	
A	Analog 0-10 V

Input Connector	
2	M12 (5-pin)

*** Note:** For 1-1/2" ported unit, please order P3YKA*BCP port block kit separately.

☐ Most popular.

For inventory, lead times, and kit lookup, visit www.pdnplu.com

Parker Hannifin Corporation
Pneumatic Division
Richland, Michigan
www.parker.com/pneumatics

Tel: +45 63 12 83 00 | Email: ps@hymatik.com | www.hymatik.com | Hvidkaervej 27a, DK-5250 Odense SV, Denmark

Material specifications

Housing	Aluminium
Pilot valve booster	Brass / NBR composite aluminium
Standard seals	NBR
Body cover screws	Steel / zinc plated

Cables

Type	Part number
M12, 5-pin female to flying lead cable, TPE; 2m (6.6 ft)	**RKC 4.5T-2/S1587**

Connection diagram

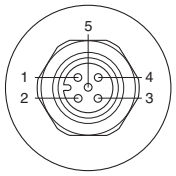

Connector M12 x 1

Pin No.		Function
1	24 V	Supply
2	0 V	Reference & mass capacity
3	0 - 10 V	Set value input
4	0 V	Signal
5	0 - 10 V	Analog output

Flow characteristics

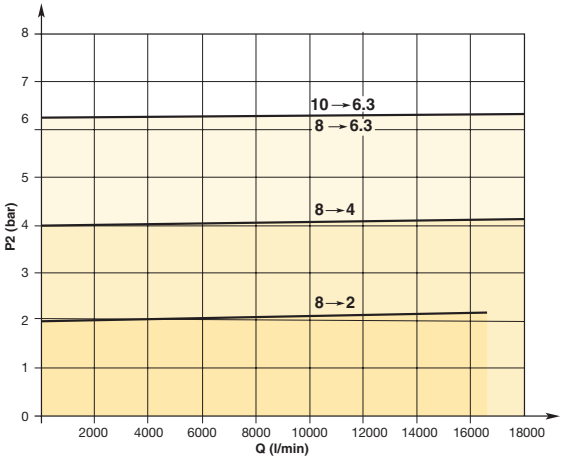

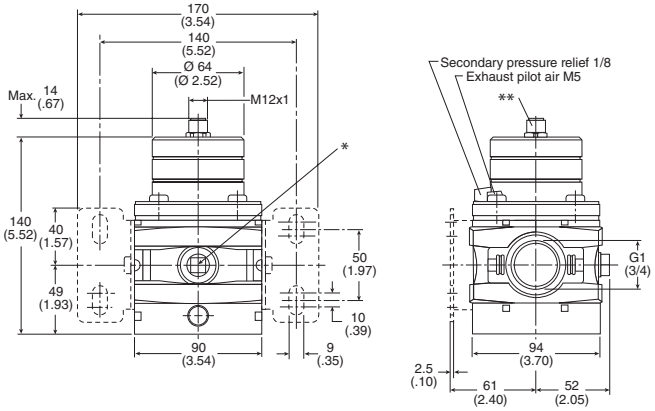

* Two opposite gauge ports 1/4, plug screw mounted
** Connection for 5-pin plug M12 x 1

For inventory, lead times, and kit lookup, visit www.pdnplu.com

Parker Hannifin Corporation
Pneumatic Division
Richland, Michigan
www.parker.com/pneumatics

Tel: +45 63 12 83 00 | Email: ps@hymatik.com | www.hymatik.com | Hvidkaervej 27a, DK-5250 Odense SV, Denmark

P3Y Filter / Regulator

- Integral 3/4" or 1" ports (BSPP or NPT)
- High efficiency element as standard
- Excellent water removal efficiency
- Robust but lightweight aluminium construction
- Secondary pressure ranges 12 and 16 bar
- Rolling diaphragm for extended life
- Secondary aspiration plus balanced poppet provides quick response and accurate pressure regulation.
- Reverse flow / relieving option
- Low temperature -40°C (-40°F) with combined manual / semi-auto drain as standard



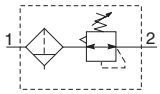

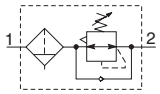

Port Size	Description (0 To 174 Psi)	Part Number
3/4"	Relieving, Combined Manual / Semi-Auto Drain	**P3YEA96ESCBNEN**
3/4"	Relieving, Auto Drain	**P3YEA96ESABNEN**
3/4"	Relieving, Gauge, Combined Manual / Semi-Auto Drain	**P3YEA96ESCBNFN**
3/4"	Relieving, Gauge, Auto Drain	**P3YEA96ESABNFN**
1"	Relieving, Combined Manual / Semi-Auto Drain	**P3YEA98ESCBNEN**
1"	Relieving, Auto Drain	**P3YEA98ESABNEN**
1"	Relieving, Gauge, Combined Manual / Semi-Auto Drain	**P3YEA98ESCBNFN**
1"	Relieving, Gauge, Auto Drain	**P3YEA98ESABNFN**

Operating information

Supply pressure (max)*:		254 psig (17.5 bar)
Operating temperature:		
Auto drain		14°F to 140°F (-10°C to 60°C)
Combined drain		-40°F to 140°F (-40°C to 60°C)
Standard filtration:		5 micron
Manual / semi-auto drain:		Closed at 11.6 psig (0.8 bar) G1/8 thread male
Auto drain bowl pressure:		Closed at 11.6 psig (0.8 bar)
Bowl capacity:		4.4 US oz. (130 cm^3)
Standard filtration:		5 micron
Flow capacity†:	3/4"	335 scfm (158.1 dm^3/s, ANR)
	1"	465 scfm (219.5 dm^3/s, ANR)
Fluid:		Compressed air
Gauge port (x2):		1/4"
Weight:		3.3 lb (1.5 kg)

† Inlet pressure 91.4 psig (6.3 bar) inlet pressure and 7.3 psig (0.5 bar) pressure drop.

* Air supply must be dry enough to avoid ice formation at temperatures below 35.6°F (2°C).

Air quality:
Within ISO 8573-1: 1991 Class 3 and 5 (Particulates)
Within ISO 8573-1: 2001 Class 6 and 7 (Particulates)

Ordering Information

P3YEA	9	6	E	SA	B	N	E	N
Basic Series	**Thread Type***	**Port Size**	**Element**	**Drain Type**	**Relief**	**Lockable**	**Adjustment Range**	
Filter / Regulator P3YEA	BSPP 1	3/4 6	E 5 micron	SC Combined Manual / Semi-Auto Drain	B Relieving	N Standard	E 0 to 174 psi (0 to 12 bar), No Gauge	
	NPT 9	1 8		SA Auto Drain	R Reverse Flow / Relieving	A† Lockable	H 0 to 232 psi (0 to 16 bar), No Gauge	
							F 0 to 174 psi (0 to 12 bar), Gauge	
							J 0 to 232 psi (0 to 16 bar), Gauge	

Notes:
* For 1-1/2" ported unit, please order P3YKA*BCP port block kit separately.
† Not field convertible.

☐ Most popular.

For inventory, lead times, and kit lookup, visit www.pdnplu.com

Parker Hannifin Corporation
Pneumatic Division
Richland, Michigan
www.parker.com/pneumatics

Tel: +45 63 12 83 00 | Email: ps@hymatik.com | www.hymatik.com | Hvidkaervej 27a, DK-5250 Odense SV, Denmark

Material specifications

Body	Aluminium
Sight glass and bowl	Polypropylene
Body cover	ABS
Element	Sintered polypropylene
Seals	Nitrile NBR
Manual / semi-auto drain	Acetal
Auto drain	PA / Ø 10mm brass connection
Bonnet	Glass filled polyamide
Control Knob	Glass filled polyamide
Valve	Brass / NBR
Screws	Steel / zinc plated

Repair and Service Kits

5 micron element kit	**P3YKA00ESE**
Bowl kit with combined manual/semi auto drain	**P3YKA00BSC**
Bowl kit with auto drain	**P3YKA00BSA**
Key lock kit	**P3XKA00AS**
Diaphragm kit (relieving type)	**P3YKA00RR**
Diaphragm kit (non-relieving type)	**P3YKA00RN**
Angle bracket + metal lock ring	**P3YKA00MS**
Panel mount nut	**P3YKA00MM**

⚠ WARNING

Product rupture can cause serious injury.
Do not connect regulator to bottled gas.
Do not exceed Maximum primary pressure rating.

CAUTION:

REGULATOR PRESSURE ADJUSTMENT – The working range of knob adjustment is designed to permit outlet pressures within their full range. Pressure adjustment beyond this range is also possible because the knob is not a limiting device. This is a common characteristic of most industrial regulators, and limiting devices may be obtained only by special design. For best performance, regulated pressure should always be set by increasing the pressure up to the desired setting.

Flow characteristics

(3/4") 5 Micron Filter / Regulator

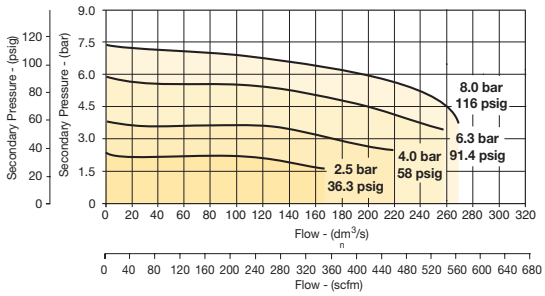

(1") 5 Micron Filter / Regulator

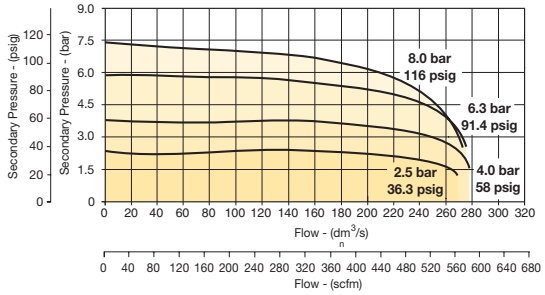

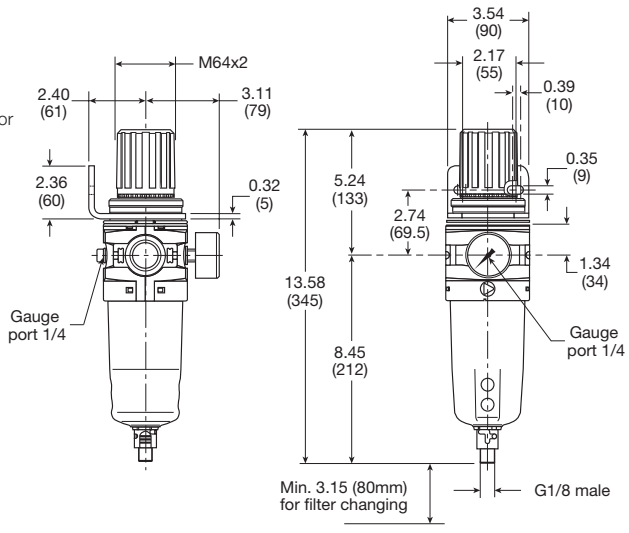

Inches (mm)

For inventory, lead times, and kit lookup, visit www.pdnplu.com

Parker Hannifin Corporation
Pneumatic Division
Richland, Michigan
www.parker.com/pneumatics

Tel: +45 63 12 83 00 | Email: ps@hymatik.com | www.hymatik.com | Hvidkaervej 27a, DK-5250 Odense SV, Denmark

P3Y Lubricator

- Integral 3/4" or 1" ports (BSPP and NPT)
- Robust but lightweight aluminium construction
- Proportional oil delivery over a wide range of air flows
- Possible to fill under system pressure eliminating down time
- Large oil reservoir



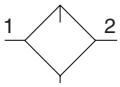

Lubricator with drain

Port Size	Description	Part Number
3/4"	Oil mist, fill under pressure	**P3YLA96LSNN**
1"	Oil mist, fill under pressure	**P3YLA98LSNN**

Operating information

Supply pressure (max)*:		254 psig (17.5 bar)
Operating temperature*:		14°F to 140°F (-10°C to 60°C)
Flow capacity†:	3/4"	315 scfm (148.2 dm^3/s, ANR)
	1"	390 scfm (184.1 dm^3/s, ANR)
Fluid:		Compressed air
Weight:		1.8 lb (0.8 kg)

† Inlet pressure 91.4 psig (6.3 bar) inlet pressure and 7.3 psig (0.5 bar) pressure drop.

* Air supply must be dry enough to avoid ice formation at temperatures below 35.6°F (2°C).

Low flow start point (lubrication pick-up): at 6.3 bar (91.4 psig) inlet pressure 0.5 dm^3/s (1.1 scfm).

Ordering Information

P3YLA **9** **6** **LSNN**

Basic Series	
Lubricator	P3YLA

Thread Type*	
BSPP	1
NPT	9

Port Size	
3/4	6
1	8

*** Note:** For 1-1/2" ported unit, please order P3YKA*BCP port block kit separately.

☐ Most popular.

For inventory, lead times, and kit lookup, visit www.pdnplu.com

Parker Hannifin Corporation
Pneumatic Division
Richland, Michigan
www.parker.com/pneumatics

Tel: +45 63 12 83 00 | Email: ps@hymatik.com | www.hymatik.com | Hvidkaervej 27a, DK-5250 Odense SV, Denmark

Material specifications

Body	Aluminium
Sight glass and bowl	Polypropylene
Sight dome	Polyamide
Lubricator cover	ABS
Top & bottom end cap	Glass filled nylon
Bayonet support	Nylon
Seals	Nitrile NBR

Repair and Service Kits

Bowl kit	**P3YKA00BSN**
Refill plug	**P3YKA00PL**
Oil (1 quart)	**F442001**
Oil (1 gallon)	**F442002**
Oil (12 quart case)	**F442003**
Oil (4 gallon case)	**F442005**

Flow characteristics

(3/4") Lubricator

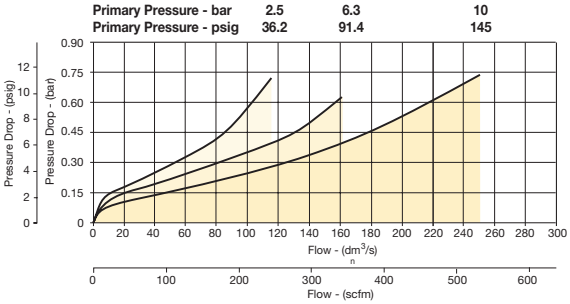

(1") Lubricator

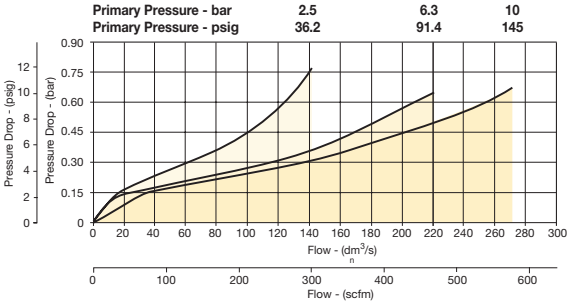

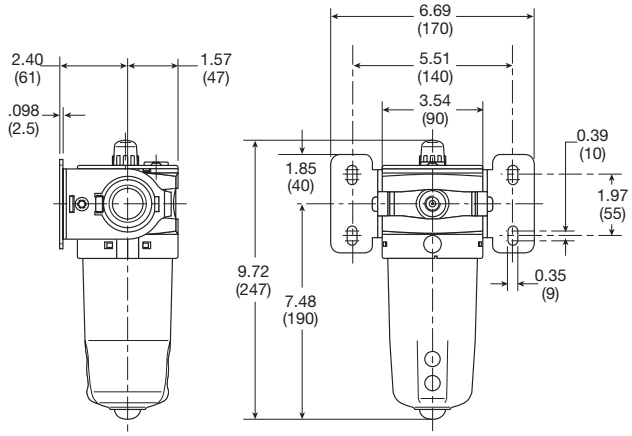

Inches (mm)

For inventory, lead times, and kit lookup, visit www.pdnplu.com

Parker Hannifin Corporation
Pneumatic Division
Richland, Michigan
www.parker.com/pneumatics

Tel: +45 63 12 83 00 | Email: ps@hymatik.com | www.hymatik.com | Hvidkaervej 27a, DK-5250 Odense SV, Denmark

P3Y Combinations



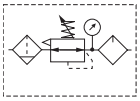

Filter + Regulator + Lubricator Combinations
5 micron element, 12 bar (174 psig) regulator + gauge and wall mounting bracket

Port Size	Flow‡ scfm	Weight lb (kg)	Combined Manual / Semi-Auto Drain†	Auto Drain†
3/4"	170	7.3 (3.3)	**P3YCB96SECNFLNF**	**P3YCB96SEANFLNF**
1"	170	7.3 (3.3)	**P3YCB98SECNFLNF**	**P3YCB98SEANFLNF**

† **Standard part numbers shown in bold. For other models refer to Options chart below.**
‡ Flow with 10 bar (145 psig) inlet pressure, 6.3 bar (91.4 psig) set pressure and 1 bar (14.5 psig) pressure drop.



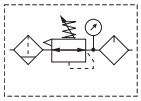

Filter / Regulator + Lubricator Combinations
5 micron element, 12 bar (174 psig) regulator + gauge and wall mounting bracket

Port Size	Flow‡ scfm	Weight lb (kg)	Combined Manual / Semi-Auto Drain†	Auto Drain†
3/4"	315	6.2 (2.8)	**P3YCA96SECNFLNF**	**P3YCA96SEANFLNF**
1"	340	6.2 (2.8)	**P3YCA98SECNFLNF**	**P3YCA98SEANFLNF**

† **Standard part numbers shown in bold. For other models refer to Options chart below.**
‡ Flow with 10 bar (145 psig) inlet pressure, 6.3 bar (91.4 psig) set pressure and 1 bar (14.5 psig) pressure drop.

Ordering Information:

P3YCA **9** **6** **SE** **C** **N** **F** **LNF**

Basic Series	
Filter / Regulator + Lubricator	P3YCA
Filter + Regulator + Lubricator	P3YCB

Thread Type*	
BSPP	1
NPT	9

Port Size	
3/4	6
1	8

Drain Type	
C	Combined Manual / Semi-Auto Drain
A	Auto Drain

Adjustment Range	
F	0-12 Bar (0 to 174 psi) with Gauge
J	0-16 Bar (0 to 232 psi) with Gauge

*** Note:** For 1-1/2" ported unit, please order P3YKA*BCP port block kit separately.

⚠ WARNING

Product rupture can cause serious injury.
Do not connect regulator to bottled gas.
Do not exceed Maximum primary pressure rating.

CAUTION:
REGULATOR PRESSURE ADJUSTMENT –
The working range of knob adjustment is designed to permit outlet pressures within their full range. Pressure adjustment beyond this range is also possible because the knob is not a limiting device. This is a common characteristic of most industrial regulators, and limiting devices may be obtained only by special design. For best performance, regulated pressure should always be set by increasing the pressure up to the desired setting.

☐ Most popular.

For inventory, lead times, and kit lookup, visit www.pdnplu.com

Parker Hannifin Corporation
Pneumatic Division
Richland, Michigan
www.parker.com/pneumatics

P3Y Combinations

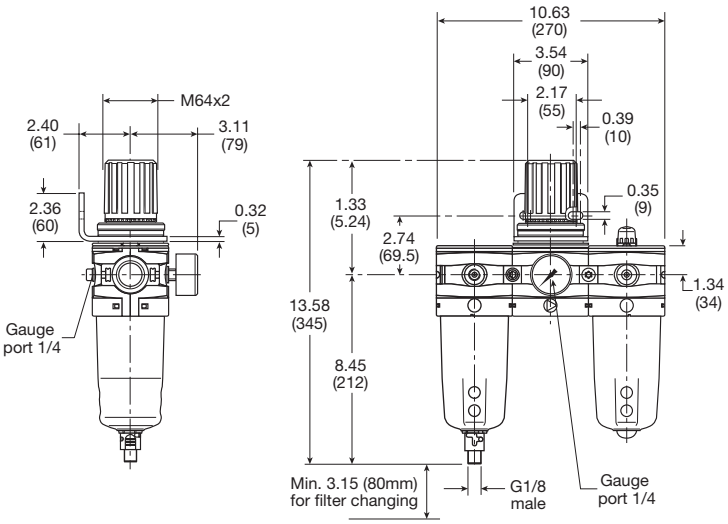

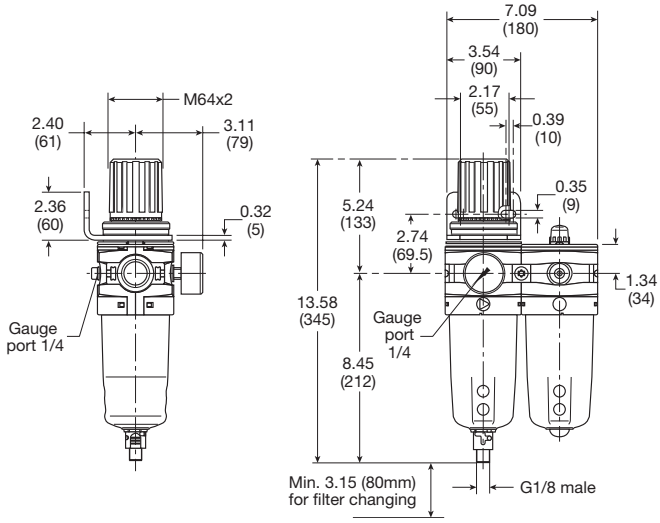

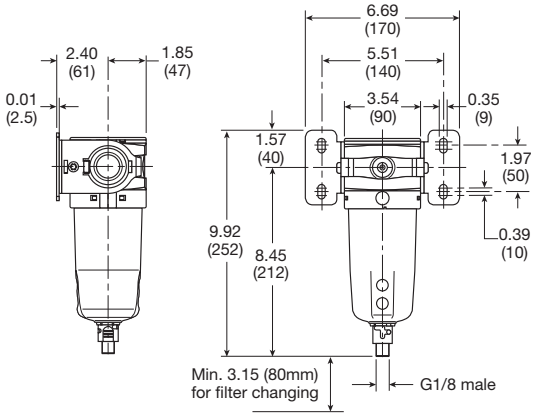

For inventory, lead times, and kit lookup, visit www.pdnplu.com

Parker Hannifin Corporation
Pneumatic Division
Richland, Michigan
www.parker.com/pneumatics

Tel: +45 63 12 83 00 | Email: ps@hymatik.com | www.hymatik.com | Hvidkaervej 27a, DK-5250 Odense SV, Denmark

P3Y Combined Soft Start / Dump Valve

- Modular design with 3/4" & 1" integral ports (BSPP or NPT)
- Provides for the safe introduction of pressure
- Automatically dumps downstream pressure on the loss of pilot signal
- Adjustable slow start
- Solenoid or air pilot options
- High flow & exhaust capability



P3Y Series Combined Soft Start / Dump Valves, provide for the safe introduction of pressure to machines or systems. Soft Start / Dump Valves when set, allow the pressure to gradually build to the set point before fully opening to deliver full flow at line pressure.

The controlled introduction of pressure can be an important safety factor and prevent damage to tooling when air pressure is introduced at machine or system start up.

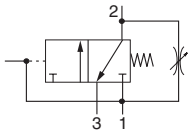

Port Size	Description	Part Number
3/4"	Air Pilot Operated	**P3YTA96PPN**
3/4"	24VDC 30mm Coil	**P3YTA96SCNA2CN**
1"	Air Pilot Operated	**P3YTA98PPN**
1"	24VDC 30mm Coil	**P3YTA98SCNA2CN**

Operating information

Operating pressure (max): 30mm coil		232 psig (16 bar)
Operating pressure (min):		2.9 psig (0.2 bar)
Operating temperature*: Solenoid operated		14°F to 140°F (-10°C to 60°C)
Air pilot operated		14°F to 140°F (-10°C to 60°C)
Air pilot port:		1/8"
Exhaust port:	NPT	3/4"
	BSPP	1"
Gauge port:		1/4"
Flow capacity†:	3/4"	371 scfm (175.1 dm³/s, ANR)
	1"	424 scfm (200.1 dm³/s, ANR)
Fluid:		Compressed air
Weight:	Air pilot	3.1 lb (1.4 kg)
	30mm coil	3.5 lb (1.6 kg)

† Inlet pressure 91.4 psig (6.3 bar) inlet pressure and 7.3 psig (0.5 bar) pressure drop.
* Air supply must be dry enough to avoid ice formation at temperatures below 35.6°F (2°C).
Snap pressure: Full flow when downstream pressure reaches 50% of the inlet pressure.

Ordering Information

P3YTA	9	6	P	C	N	A	2	C	N

Solenoid type only

Basic Series
Soft Start / Dump Valve — P3YTA

Thread Type*
BSPP — 1
NPT — 9

Pilot Type
External Air Pilot — P
Solenoid Pilot — S

Solenoid Voltage
2CN — 24VDC

Port Size
3/4 — 6
1 — 8

Actuator Interface
30mm Operator — C
Threaded Air Pilot — P

Solenoid Type
A — 30mm CNOMO Coil
D — 30mm CNOMO Coil (M12 connection)

*** Note:** For 1-1/2" ported unit, please order P3YKA*BCP port block kit separately.

☐ Most popular.

For inventory, lead times, and kit lookup, visit www.pdnplu.com

Parker Hannifin Corporation
Pneumatic Division
Richland, Michigan
www.parker.com/pneumatics

Tel: +45 63 12 83 00 | Email: ps@hymatik.com | www.hymatik.com | Hvidkaervej 27a, DK-5250 Odense SV, Denmark

Material specifications

Body	Aluminium
Body cover	ABS
Valve	Brass / NBR composite
Pilot valve booster	Aluminum
Seals	Nitrile NBR

Note: For solenoid coil and cable plug options see solenoid operator pages.

Flow characteristics

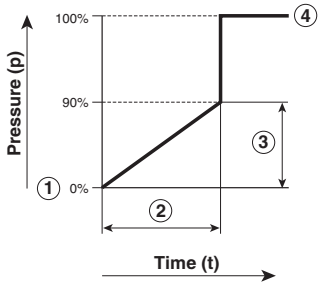

1. Start signal
2. Switching time delay
3. Gradual pressure build up
4. Operating pressure p^2 (= p^1)

Combined start / stop function

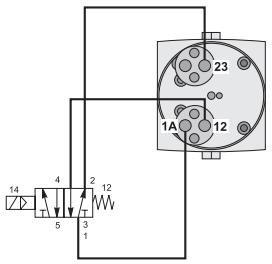

Combined start / stop function with acknowledgement

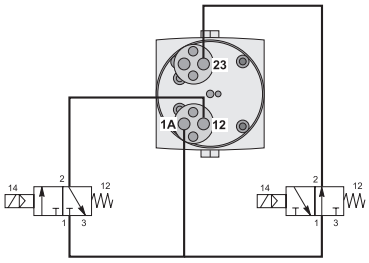

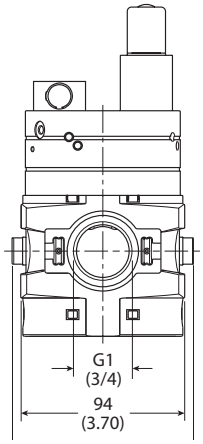

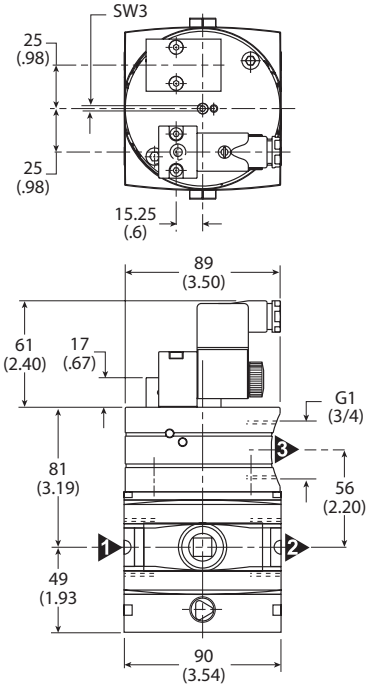

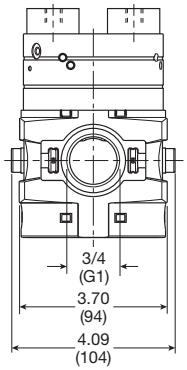

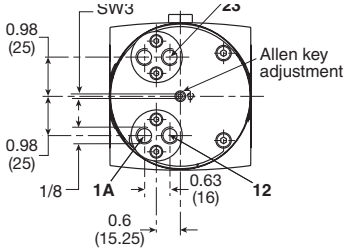

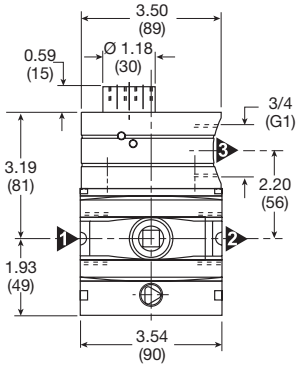

For inventory, lead times, and kit lookup, visit www.pdnplu.com

Parker Hannifin Corporation
Pneumatic Division
Richland, Michigan
www.parker.com/pneumatics

Tel: +45 63 12 83 00 | Email: ps@hymatik.com | www.hymatik.com | Hvidkaervej 27a, DK-5250 Odense SV, Denmark

P3Y Soft Start Valve

- Integral 3/4" or 1" ports
- Smooth start-up of pneumatic system
- Air pilot operation
- Adjustable slow start
- High flow

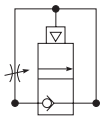



Port Size	Description	Part Number
3/4"	Soft Start Valve	**P3YSA96Y0N**
1"	Soft Start Valve	**P3YSA98Y0N**

Material specifications

Body	Aluminium
Body cover	ABS
Valve	Brass / NBR composite
Pilot valve booster	Aluminum
Seals	Nitrile NBR

Operating information

Operating pressure (max):		254 psig (17.5 bar)
Operating pressure (min):		29 psig (2 bar)
Operating temperature*:		
Solenoid operated		14°F to 140°F (-10°C to 60°C)
Air pilot operated		14°F to 140°F (-10°C to 60°C)
Flow capacity†:	3/4"	324 scfm (152.9 dm³/s, ANR)
	1"	324 scfm (152.9 dm³/s, ANR)
Fluid:		Compressed air
Weight:		1.8 lb (0.8 kg)

† Inlet pressure 91.4 psig (6.3 bar) inlet pressure and 7.3 psig (0.5 bar) pressure drop.
* Air supply must be dry enough to avoid ice formation at temperatures below 35.6°F (2°C).
Snap pressure: Full flow when downstream pressure reaches 50% of the inlet pressure.

Ordering Information

P3YSA | **9** | **6** | **Y** | **0** | **N**

Basic Series		Thread Type*		Port Size	
Soft Start Valve	P3YSA	BSPP	1	3/4	6
		NPT	9	1	8

*** Note:** For 1-1/2" ported unit, please order P3YKA*BCP port block kit separately.

Flow characteristics

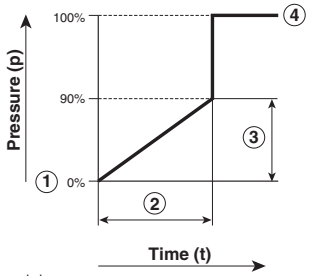

1 Start signal
2 Switching time delay
3 Gradual pressure build up
4 Operating pressure p^2 (= p^1)

Most popular.

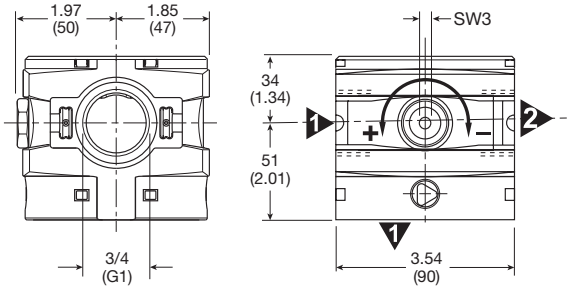

Inches (mm)

For inventory, lead times, and kit lookup, visit www.pdnplu.com

Parker Hannifin Corporation
Pneumatic Division
Richland, Michigan
www.parker.com/pneumatics

Tel: +45 63 12 83 00 | Email: ps@hymatik.com | www.hymatik.com | Hvidkaervej 27a, DK-5250 Odense SV, Denmark

P3Y Modular Ball Valve

- Positive bubble tight shut-off
- 90° turn handle to prevent unauthorized adjustment
- Pad lockable (up to 6 times)
- When the inlet pressure is turned off the downstream vents through the exhaust port

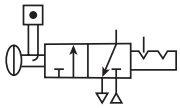



Ball / Lockout Valve shuts off downstream line pressure in the closed position with a 90° turn of the handle. In the closed position, inlet air pressure is blocked and downstream / system air is exhausted through a threaded port. To prevent unauthorized adjustment, the padlock slide may be assembled on either side. It is recommended that this slide is installed after final system assembly.

The Safety Lockout valves conform to OSHA #29 CFR part 1910 – control of hazardous energy source (lockout / tagout).

Operating information

Operating pressure (max):		254 psig (17.5 bar)
Operating pressure (min):		29 psig (2 bar)
Operating temperature:		14°F to 140°F (-10°C to 60°C)
Flow capacity†:	3/4"	705.6 scfm (333 dm³/s, ANR)
	1"	705.6 scfm (333 dm³/s, ANR)
Weight:	3/4"	2.4 lb (1.1 kg)
	1"	2.4 lb (1.1 kg)

Ordering Information

P3YVA	9	6	LBN

Basic Series		Thread Type*		Port Size	
Modular Ball Valve	P3YVA	BSPP	1	3/4	6
		NPT	9	1	8

*** Note:** For 1-1/2" ported unit, please order P3YKA*BCP port block kit separately.

Material Specifications

Body	Aluminium
Valve ball	Brass / nickle plated
Handle	Aluminum
Seals	Nitrile NBR
Exhaust silencer	Sintered bronze

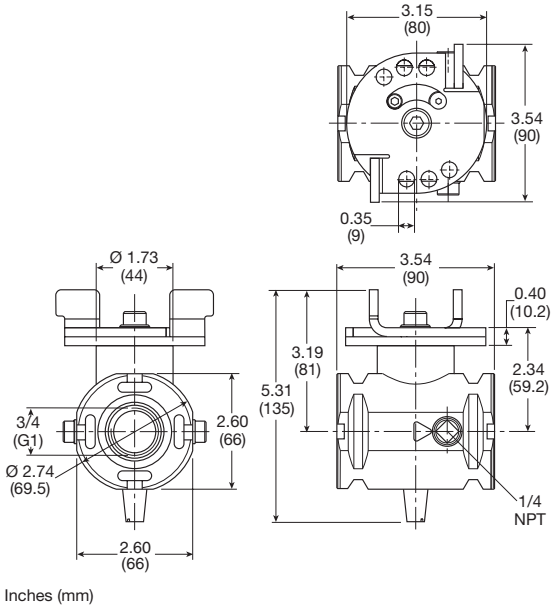

Inches (mm)

For inventory, lead times, and kit lookup, visit www.pdnplu.com

Parker Hannifin Corporation
Pneumatic Division
Richland, Michigan
www.parker.com/pneumatics

Tel: +45 63 12 83 00 | Email: ps@hymatik.com | www.hymatik.com | Hvidkaervej 27a, DK-5250 Odense SV, Denmark

Modular Manifold



P3Y Series Manifolds provide up to 4 extra outlet ports. They may be assembled at any position in a combination e.g. before the lubricator to provide oil free take off or at the end of a combination to provide extra outlet ports.

Thread Type	Part Number
BSPP	**P3YMA1V0N**
NPT	**P3YMA9V0N**

Port Sizes

Inlet Port	Top	Bottom	Front and Back
3/4"	1/8"	1"	1/4"
1"	1/8"	1"	1/4"

Material specifications

Body	Aluminium
Weight	0.7 kg (1.5 lb)

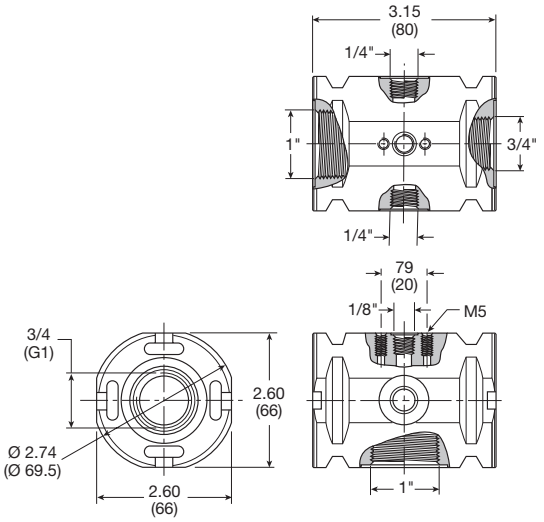

Inches (mm)

Optional Port Block Kits

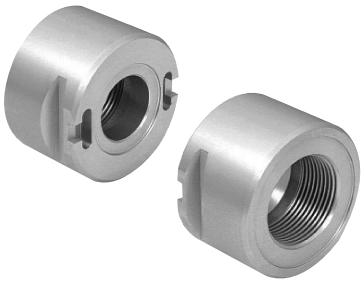

- To change port sizes Port Block Kits are available, they are attached to any unit utilizing the connecting kit.
- Allows assemblies to be removed from a hard piped system.

Material specifications

Body	Aluminium
Weight	0.65 kg (1.43 lb)

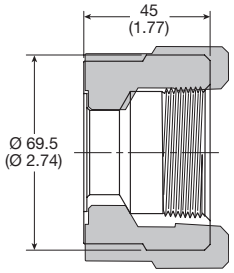

Inches (mm)

Ordering Information

P3YKA	9	B	CP

Basic Series		Thread Type		Port Size	
Port Blocks	P3YKA	BSPP	1	1-1/2	B
		NPT	9		

For inventory, lead times, and kit lookup, visit www.pdnplu.com

Parker Hannifin Corporation
Pneumatic Division
Richland, Michigan
www.parker.com/pneumatics

Tel: +45 63 12 83 00 | Email: ps@hymatik.com | www.hymatik.com | Hvidkaervej 27a, DK-5250 Odense SV, Denmark

Solenoid Operators - CNOMO

Technical data -
Solenoid operators, coil combinations

	NC Normal Operator with 22 x 30 standard coil	NC Normal Operator with 30 x 30 standard coil
Working pressure	0 to 10 bar	0 to 10 bar
Ambient temperature	-10°C to 60°C *	-10°C to 60°C *
Power (DC)	4.8W	2.7W
Power (AC)	8.5VA	4.9VA
Voltage tolerance	+/-10%	+/-10%
Duty cycle	100%	100%
Insulation class	F	F
Electric connection	B Industrial	DIN 43650A
Protection	IP65	IP65
Approval		UL/CSA
Working media	All neutral media such as compressed air	

* Limited to 50°C if use with 100% duty cycle

Solenoid Coils with M12 Connection

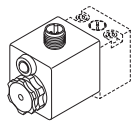

Voltage	Part Number	Weight (Kg)
Direct current		
24VDC	**P2FC6449**	0.065

Transients

Interrupting the current through the solenoid coil produces momentary voltage peaks which, under unfavorable conditions, can amount to several hundred times the rated operating voltage. Normally, these transients do not cause problems, but to achieve the Maximum life of relays in the circuit (and particularly of transistors, thyristors and integrated circuits) it is desirable to provide protection by means of voltage-dependent resistors (varistors). All connectors/cable plugs EN175301-803 with LED's include this type of circuit protection.

Materials

Pilot Valve	
Body:	Polyamide
Armature tube:	Brass
Plunger & core:	Corrosion resistant Cr-Ni steel
Seals:	Fluorocarbon
Screws:	Stainless steel
Coil	
Encapsulation material:	Thermoplastic as standard Duroplast for M12 connection

Spare Base Solenoid Pilot Operator CNOMO NC

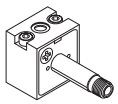

Description	Part Number	Weight (Kg)
Non-lock Manual Override	**P2FP23N4B**	0.065
No Override	**P2FP23N4A**	0.065

Note: Solenoid pilot operators are fitted to the Global range. Order the above part numbers for spares. The operators are supplied with mounting screws and interface 'O' rings. Coils and connectors must be ordered separately.

Solenoid Coils with DIN A or Industrial B Connection

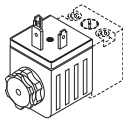

Voltage	22mm x 30mm Part Number B Industrial Standard	Weight (Kg)	30mm x 30mm Part Number DIN 43650A Standard	Weight (Kg)
Direct current				
24VDC	**P2FCB449**	0.093	**P2FCA449**	0.105
Alternative current				
110V 50Hz, 120V 60Hz	**P2FCB453**	0.093	**P2FCA453**	0.105

☐ Most popular.

For inventory, lead times, and kit lookup, visit www.pdnplu.com

Parker Hannifin Corporation
Pneumatic Division
Richland, Michigan
www.parker.com/pneumatics

Solenoid Connectors / Cable Plugs EN175301-803

	Description	Part Number 22mm Form B Industrial	Part Number 30mm Form A DIN 43650A
With Standard Screw 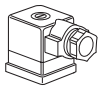	Standard IP65 without Flying Lead	**PS2429BP**	**PS2028BP**
	With LED and Protection 24VAC/DC	**PS243079BP**	**PS203279BP**
	With LED and Protection 110VAC	**PS243083BP**	**PS203283BP**
With Cable 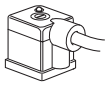	Standard with 2m cable IP65	**PS2429JBP**	**PS2028JCP**
	24VAC/DC, 2m cable LED and protection IP65	**PS2430J79BP**	**PS2032J79CP**
	110VAC/DC, 2m cable LED and protection IP65	**PS2430J83BP**	**PS2032J83CP**

Solenoid coil dimensions mm (inches)

22 x 30mm

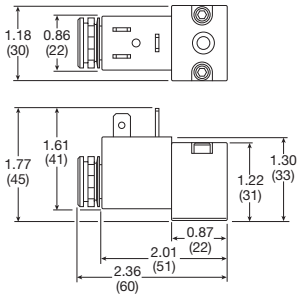

30 x 30mm

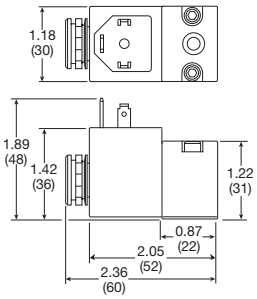

Electrical schematics

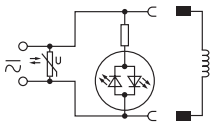

PS243079BP	**PS203279BP**
PS2430J79BP	**PS2032J79CP**
PS243083BP	**PS203283BP**
PS2430J83BP	**PS2032J83CP**
PS294679BP	**PS294683BP**
PS2946J79BP	**PS2946J83BP**

Cable plug dimensions mm (inches)

22mm Form B industrial cable plugs

PS2429BP

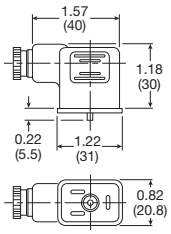

30mm DIN 43650A cable plugs

PS2028BP

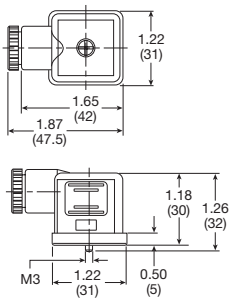

Most popular.

For inventory, lead times, and kit lookup, visit www.pdnplu.com

Parker Hannifin Corporation
Pneumatic Division
Richland, Michigan
www.parker.com/pneumatics

Tel: +45 63 12 83 00 | Email: ps@hymatik.com | www.hymatik.com | Hvidkaervej 27a, DK-5250 Odense SV, Denmark

Accessories

Description		Connection	Weight lb (kg)	Part Number	
0.01 micron element kit				**P3YKA00ESC**	
5 micron element kit				**P3YKA00ESE**	
Adsorber element kit				**P3YKA00ESA**	
Angle bracket + metal lock ring				**P3YKA00MS**	
Bowl kit with combined manual / semi-auto drain				**P3YKA00BSC**	
Bowl kit with auto drain				**P3YKA00BSA**	
Bowl kit				**P3YKA00BSN**	
Connector o-ring kit	Qty: 5			**P3YKA08CY**	
Differential pressure indicator kit				**P3YKA00RQ**	
Diaphragm kit (relieving type)				**P3YKA00RR**	
Diaphragm kit (non-relieving type)				**P3YKA00RN**	
Key lock (replacement)				**P3XKA00AS**	
Lubricator oil	F442001 - 1 Qt.		2.03 (0.92)	**F442001**	
	F442002 - 1 Gal			**F442002**	
Neck mounting bracket kit			8.27 (3.75)	**P3YKA00MS**	
P3Y connecting kit			0.11 (0.05)	**P3YKA00CB**	
Panel mounting nut (Aluminium)			1.54 (0.70)	**P3YKA00MM**	
Pressure gauge	0 to 160 psig (0 to 10 bar)	1/4"	0.13 (0.06)	**K4520N14160**	
	0 to 300 psig (0 to 20 bar)	1/4"	0.13 (0.06)	**K4520N14300**	
Refill plug				**P3YKA00PL**	
Wall mounting brackets			0.44 (0.2)	**P3YKA00CW**	

Most popular.

Parker Hannifin Corporation
Pneumatic Division
Richland, Michigan
www.parker.com/pneumatics

Tel: +45 63 12 83 00 | Email: ps@hymatik.com | www.hymatik.com | Hvidkaervej 27a, DK-5250 Odense SV, Denmark



Air Preparation Products
14 Series Products

14F Particulate Filters	D2-D3
10F Coalescing Filters	D4-D5
14R Regulators	D6-D7
14E Filter / Regulators	D8-D9
04L Lubricators	D10-D11
14A / 14G Combinations	D12-D13

Parker Hannifin Corporation
Pneumatic Division
Richland, Michigan
www.parker.com/pneumatics

Tel: +45 63 12 83 00 | Email: ps@hymatik.com | www.hymatik.com | Hvidkaervej 27a, DK-5250 Odense SV, Denmark

14F Particulate Filters – Miniature

- Excellent water removal efficiency
- Unique deflector plate that creates swirling of the air stream ensuring maximum water and dirt separation
- Easily disassembled for servicing without the use of tools
- 5 micron element standard
- Interchangeable twist and automatic pulse drains
- 1/8" & 1/4" ports (NPT, BSPP & BSPT)



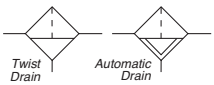

Port Size	Description ‡	Part Number
1/8"	Poly Bowl, Twist Drain	**14F01BB**
1/8"	Metal Bowl, Twist Drain	**14F03BB**
1/8"	Poly Bowl, Auto Pulse Drain	**14F05BB**
1/8"	Metal Bowl, Auto Pulse Drain	**14F07BB**
1/4"	Poly Bowl, Twist Drain	**14F11BB**
1/4"	Metal Bowl, Twist Drain	**14F13BB**
1/4"	Poly Bowl, Auto Pulse Drain	**14F15BB**
1/4"	Metal Bowl, Auto Pulse Drain	**14F17BB**

‡ For polycarbonate bowl, see caution in Engineering Section A.

Operating information

Supply pressure (max):		
Plastic bowl		0 to 150 psig (0 to 10.3 bar)
Metal bowl		0 to 250 psig (0 to 17.2 bar)
Auto pulse drain		10 to 250 psig (0.7 to 17.2 bar)
Operating temperature:		
Plastic bowl		32°F to 125°F (0°C to 52°C)
Metal bowl		32°F to 175°F (0°C to 80°C)
Auto pulse drain		125°F (52°C) or less
Flow capacity†:		
High flow	1/8"	22 scfm (10.4 dm^3/s, ANR)
	1/4"	24 scfm (11.3 dm^3/s, ANR)
Bowl capacity:		1 oz.
Auto pulse drain tube barb		1/8 inch
Weight:		0.41 lb (0.18 kg)

† scfm = Standard cubic feet per minute at 90 psig inlet and 5 psig pressure drop.

Ordering Information:

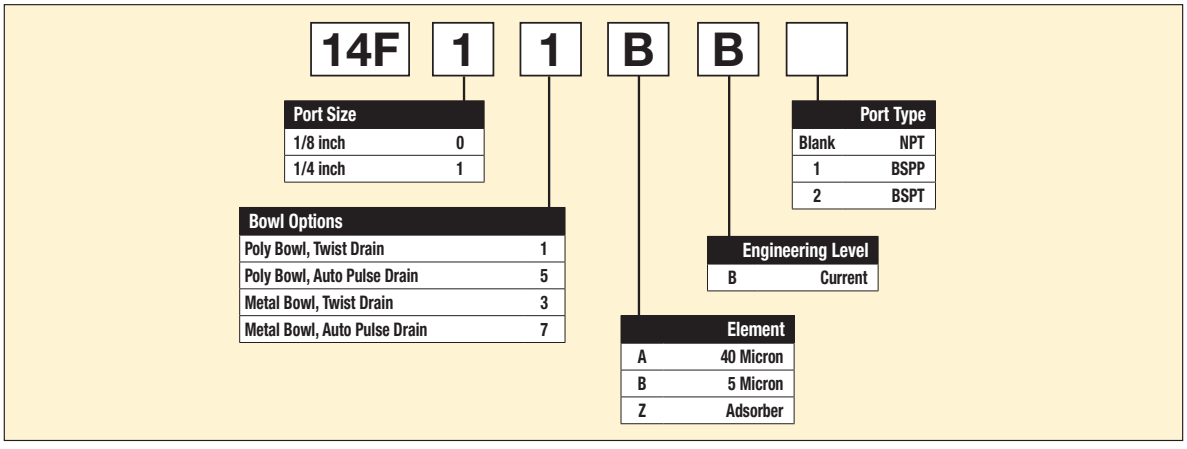

☐ Most popular.

Tel: +45 63 12 83 00 | Email: ps@hymatik.com | www.hymatik.com | Hvidkaervej 27a, DK-5250 Odense SV, Denmark

Material Specifications

Body	Zinc
Transparent bowl	Polycarbonate
Metal bowl without sight gauge	Zinc
Deflector, element holder & baffle	Plastic
Twist drain, body & stem	Plastic
Twist drain, seals	Nitrile
Auto pulse drain, piston & seals	Nitrile
Auto pulse drain, stem, seat, adaptor & washers	Aluminum
Element	Plastic
Adsorber (optional)	Activated charcoal
Seals	Nitrile

Repair and Service Kits

Poly bowl / auto pulse drain	**PS408BP**
Poly bowl / twist drain	**PS404P**
Metal bowl / auto pulse drain	**PS451BP**
Metal bowl / twist drain	**PS447BP**
40 Micron element	**PS401P**
5 Micron element	**PS403P**
5 Micron cartridge kit	**PS407P**
Adsorber element	**PS452P**
Mounting bracket kit	**PS417BP**

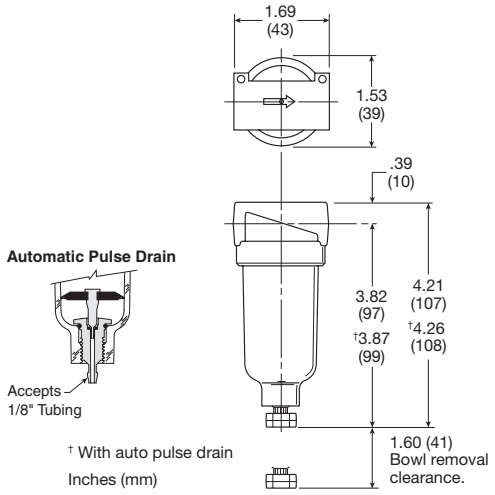

Flow Charts

14F 1/8" Particulate Filter

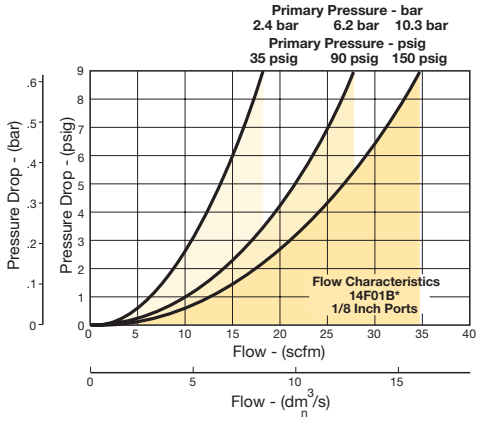

14F 1/4" Particulate Filter

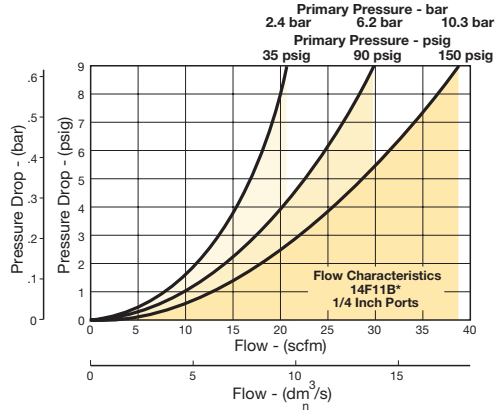

For inventory, lead times, and kit lookup, visit www.pdnplu.com

Parker Hannifin Corporation
Pneumatic Division
Richland, Michigan
www.parker.com/pneumatics

Tel: +45 63 12 83 00 | Email: ps@hymatik.com | www.hymatik.com | Hvidkaervej 27a, DK-5250 Odense SV, Denmark

10F Coalescing Filters – Miniature

- Removes liquid aerosols and sub-micron particles.
- Liquids gravitate to the bottom of the element and will not re-enter the airstream.
- Oil free air for critical applications, such as air gauging and pneumatic instrumentation and controls.
- Interchangeable twist and automatic pulse drains.
- Grade 6 element, 99.97% DOP efficiency
- 1/8", 1/4" ports (NPT, BSPP, BSPT)





Port Size	Description ‡	Part Number
1/8"	Poly Bowl, Twist Drain	**10F01ED**
1/8"	Metal Bowl, Twist Drain	**10F03ED**
1/8"	Poly Bowl, Auto Pulse Drain	**10F05ED**
1/8"	Metal Bowl, Auto Pulse Drain	**10F07ED**
1/4"	Poly Bowl, Twist Drain	**10F11ED**
1/4"	Metal Bowl, Twist Drain	**10F13ED**
1/4"	Poly Bowl, Auto Pulse Drain	**10F15ED**
1/4"	Metal Bowl, Auto Pulse Drain	**10F17ED**

Standard part numbers shown bold, with Grade 6 Elements (for Grade 10 Elements, replace "E" with "H" in the 6th position). For other models refer to ordering information below.

‡ For polycarbonate bowl, see caution in Engineering Section A.

Operating information

Supply pressure (max):		
Plastic bowl		0 to 150 psig (0 to 10.3 bar)
Metal bowl		0 to 250 psig (0 to 17.2 bar)
Auto pulse drain		10 to 250 psig (0.7 to 17.2 bar)
Operating pressure drop:		
Normal		2 psig (0.14 bar)
Max recommended (Element should be replaced)		10 psig (0.7 bar)
Operating temperature:		
Plastic bowl		32°F to 125°F (0°C to 52°C)
Metal bowl		32°F to 175°F (0°C to 80°C)
Auto pulse drain		125°F (52°C) or less
Flow capacity†:	Grade 6 (0.01 micron)	1/8" 17 scfm (8 dm^3/s, ANR) 1/4" 20 scfm (9.4 dm^3/s, ANR)
	Grade 10 (1.0 micron)	1/8" 19 scfm (9 dm^3/s, ANR) 1/4" 24 scfm (11.3 dm^3/s, ANR)
Bowl capacity:		1 oz.
Auto pulse drain tube barb		1/8 inch
Weight:		0.41 lb (0.18 kg)

† scfm = Standard cubic feet per minute at 90 psig inlet and 5 psig pressure drop.

Ordering Information:

10F | **1** | **1** | **E** | **D** | ☐

Port Size	
1/8 inch	0
1/4 inch	1

Bowl Options	
Poly Bowl, Twist Drain	1
Poly Bowl, Auto Pulse Drain	5
Metal Bowl, Twist Drain	3
Metal Bowl, Auto Pulse Drain	7

Element	
E	Grade 6
H	Grade 10

Engineering Level	
D	Current

Port Type	
Blank	NPT
1	BSPP
2	BSPT

☐ Most popular.

For inventory, lead times, and kit lookup, visit www.pdnplu.com

Parker Hannifin Corporation
Pneumatic Division
Richland, Michigan
www.parker.com/pneumatics

Tel: +45 63 12 83 00 | Email: ps@hymatik.com | www.hymatik.com | Hvidkaervej 27a, DK-5250 Odense SV, Denmark

Material Specifications

Body	Zinc
Transparent bowl	Polycarbonate
Metal bowl without sight gauge	Zinc
Twist drain, body & stem	Plastic
Twist drain, seals	Nitrile
Auto pulse drain, piston & seals	Nitrile
Auto pulse drain, stem, seat, adaptor & washers	Aluminum
Element holder	Plastic
Element	Borosilicate & felt glass fibers
Seals	Nitrile

Repair and Service Kits

Poly bowl / auto pulse drain kit	**PS408BP**
Poly bowl / twist drain kit	**PS404P**
Metal bowl / auto pulse drain kit	**PS451BP**
Metal bowl / twist drain kit	**PS447BP**
Grade 6 element (standard)	**PS446P**
Grade 10 element (optional)	**PS456P**
Mounting bracket kit	**PS417BP**

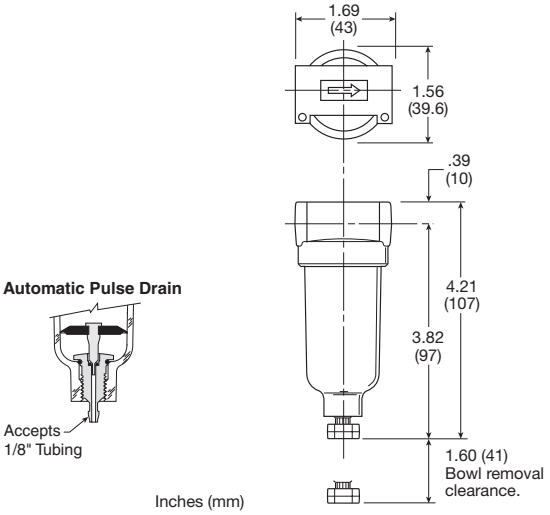

Flow Charts

Grade 6 Element

10F 1/8" Coalescing Filter

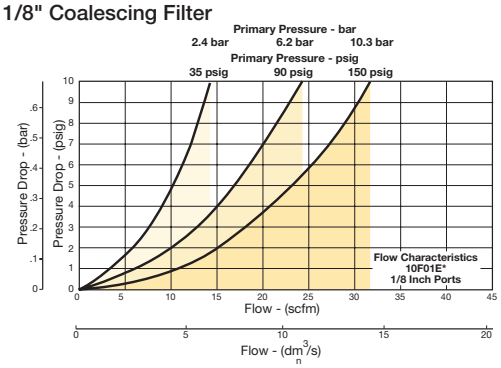

10F 1/4" Coalescing Filter

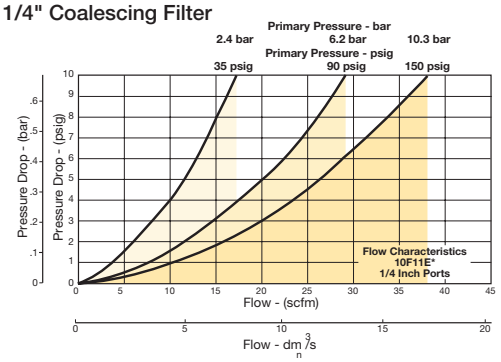

Grade 10 Element

10F 1/8" Coalescing Filter

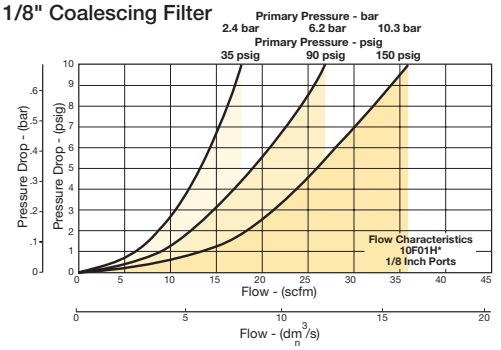

10F 1/4" Coalescing Filter

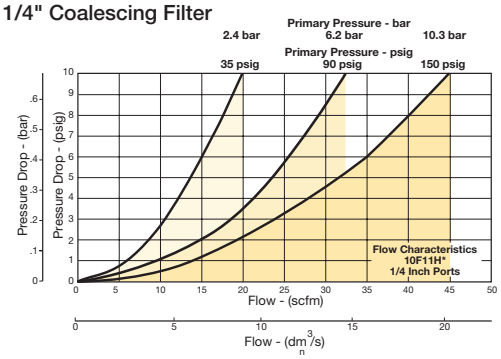

Tel: +45 63 12 83 00 | Email: ps@hymatik.com | www.hymatik.com | Hvidkaervej 27a, DK-5250 Odense SV, Denmark

14R Regulators – Miniature

- Unbalanced poppet standard
- Solid control piston with lip seal for extended life
- Non-rising adjusting knob
- Compact design
- Very easy to service
- 1/8", 1/4" ports (NPT, BSPP, BSPT)



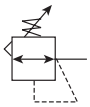

Port Size	Description	Part Number
1/8"	Without Gauge	**14R013FC**
1/8"	With Gauge	**14R018FC**
1/4"	Without Gauge	**14R113FC**
1/4"	With Gauge	**14R118FC**

NOTE: 1.218 Dia. (31 mm) hole required for panel mounting.

Operating information

Supply pressure (max):		0 to 300 psig (0 to 20.7 bar)
Secondary pressure ranges		
Standard		2 to 125 psig (0 to 8.6 bar)
Medium		1 to 60 psig (0 to 4.1 bar)
Medium		1 to 30 psig (0 to 2.1 bar)
Low		1 to 15 psig (0 to 1 bar)
Operating temperature:		32°F to 125°F (0°C to 52°C)
Low temperature		-4°F to 125°F (-20°C to 52°C)
Flow capacity†:		
High flow	1/8"	13 scfm (6.1 dm^3/s, ANR)
	1/4"	15 scfm (7.1 dm^3/s, ANR)
Gauge ports (2):		1/8 or 1/4 inch
Weight:		0.3 lb (0.14 kg)

† scfm = Standard cubic feet per minute at 100 psig inlet, 90 psig no flow secondary setting and 10 psig pressure drop.

Ordering Information:

14R **1** **13** **F** **C** ☐ ☐ ☐

Port Size	
1/8 inch Pipe, 1/8 inch Gauge Port	0
1/4 inch Pipe, 1/8 inch Gauge Port	1
1/4 inch Pipe, 1/4 inch Gauge Port	B
1/8 inch Pipe, no Gauge Port	C
Manifold Mounting	M

Pressure Range			
Yellow Knob		Black Knob	
Without Gauge			
30 psig	10	30 psig	B0
60 psig	11	60 psig	B1
15 psig	12	15 psig	B2
125 psig	13	125 psig	B3
With Gauge*			
30 psig	15	30 psig	B5
60 psig	16	60 psig	B6
15 psig	17	15 psig	B7
125 psig	18	125 psig	B8

* Not available with BSPP or BSPT port types.

Engineering Level	
C	Current

Relief	
F	Relieving
G	Non-Relieving
H	Low Temp. Relieving
J	Low Temp. Non-Relieving

Port Type	
Blank	NPT
1	BSPP
2	BSPT

Preset / Pressure Limited	
Blank	None
XXX*	Preset Pressure
XXX*	Pressure Limited

* Available preset / pressure limited range, 10 to 90 psig in 5 psig increments. For higher pressures, contact factory.

(Example: 065 = 65 psig)

Options	
Blank	No Options
L†	Preset Non-Adjustable
P†	Preset Adjustable
S†	Pressure Limiter Max. Adjustable
T†	Pressure Limiter Max. Non-Adjustable

† Inlet pressure is 100 psig. For other pressures contact factory.

Spring Type by Preset / Limited Pressure:
For Preset / Limited Pressure 10 to 25 use 30 psi spring
For Preset / Limited Pressure 26 to 50 use 60 psi spring
For Preset / Limited Pressure 51 to 90 use 125 psi spring

☐ Most popular.

For inventory, lead times, and kit lookup, visit www.pdnplu.com

Parker Hannifin Corporation
Pneumatic Division
Richland, Michigan
www.parker.com/pneumatics

Material Specifications

Adjusting nut	Brass
Adjusting stem & spring	Steel
Body	Zinc
Bonnet, seat, piston & valve poppet	Plastic
Seals	Nitrile

Repair and Service Kits

Bonnet assembly kit	**L01369**
Bonnet tamperproof kit	**P01265**
30 psig gauge, 1/8" NPT (0 to 2.1 bar)	**K4515N18030**
60 psig gauge, 1/8" NPT (0 to 4.1 bar)	**K4515N18060**
160 psig gauge, 1/8" NPT (0 to 11.0 bar)	**K4515N18160**
60 psig gauge, 1/4" NPT (0 to 4.1 bar)	**K4520N14060**
160 psig gauge, 1/4" NPT (0 to 11.0 bar)	**K4520N14160**
Mounting bracket kit* (includes panel mount nut)	**PS417BP**
Plastic panel mount nuts*	**P78652**
Metal panel mount nuts*	**P01531**
Unbalanced non-relieving, poppet / piston kit	**PS428P**
Unbalanced relieving, poppet / piston kit	**PS426P**
1-15 psig spring (yellow)	**P01176**
1-30 psig spring (black)	**P01175**
1-60 psig spring (white)	**P01174**
2-125 psig spring (gold)	**P01173**

* Tighten panel mount nut 2.8 to 3.4 Nm (25 to 30 in-lbs) of torque.

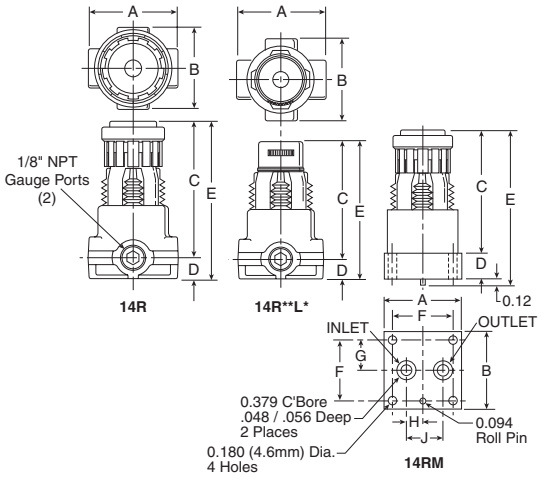

Flow Charts

14R 1/8" Ports

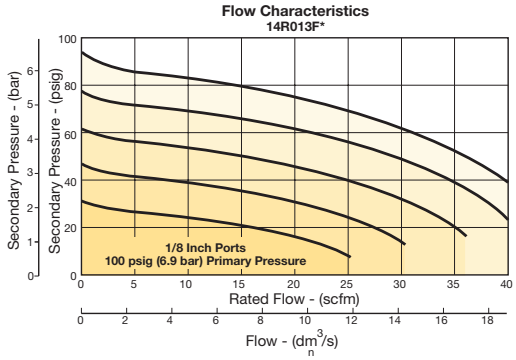

14R 1/4" Ports

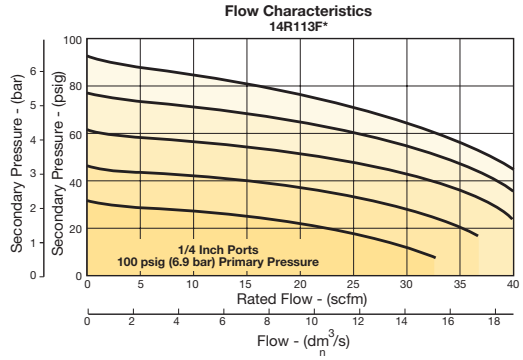

⚠ WARNING

Product rupture can cause serious injury.
Do not connect regulator to bottled gas.
Do not exceed Maximum primary pressure rating.

CAUTION:

REGULATOR PRESSURE ADJUSTMENT – The working range of knob adjustment is designed to permit outlet pressures within their full range. Pressure adjustment beyond this range is also possible because the knob is not a limiting device. This is a common characteristic of most industrial regulators, and limiting devices may be obtained only by special design. For best performance, regulated pressure should always be set by increasing the pressure up to the desired setting.

Parker Hannifin Corporation
Pneumatic Division
Richland, Michigan
www.parker.com/pneumatics

Tel: +45 63 12 83 00 | Email: ps@hymatik.com | www.hymatik.com | Hvidkaervej 27a, DK-5250 Odense SV, Denmark

14E Filter / Regulator – Miniature

- Excellent water removal efficiency
- Unbalanced poppet standard
- Solid control piston for extended life
- Space saving package offers both filter and regulator features in one integral unit
- Non-rising adjustment knob
- Two full flow 1/8" gauge ports
- 1/8", 1/4" ports (NPT, BSPP, BSPT)



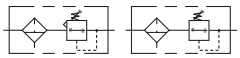

Port Size	Description ‡	Part Number
1/8"	Poly Bowl, Twist Drain	**14E01B13FC**
1/8"	Metal Bowl, Twist Drain	**14E03B13FC**
1/8"	Poly Bowl, Auto Pulse Drain	**14E05B13FC**
1/8"	Metal Bowl, Auto Pulse Drain	**14E07B13FC**
1/4"	Poly Bowl, Twist Drain	**14E11B13FC**
1/4"	Metal Bowl, Twist Drain	**14E13B13FC**
1/4"	Poly Bowl, Auto Pulse Drain	**14E15B13FC**
1/4"	Metal Bowl, Auto Pulse Drain	**14E17B13FC**

‡ For polycarbonate bowl, see caution in Engineering Section A.

NOTE: 1.218 Dia. (31 mm) hole required for panel mounting.

Operating information

Supply pressure (max):		
Plastic bowl		0 to 150 psig (0 to 10.3 bar)
Metal bowl		0 to 250 psig (0 to 17.2 bar)
Secondary pressure ranges		
Standard		2 to 125 psig (0 to 8.6 bar)
Medium		1 to 30 psig (0 to 2.1 bar)
Medium		1 to 60 psig (0 to 4.1 bar)
Low		1 to 15 psig (0 to 1 bar)
Operating temperature:		
Plastic bowl		32°F to 125°F (0°C to 52°C)
Metal bowl		32°F to 175°F (0°C to 80°C)
Flow capacity†:		
High flow	1/8"	16 scfm (7.6 dm^3/s, ANR)
	1/4"	18 scfm (8.5 dm^3/s, ANR)
Bowl capacity:		1 oz.
Auto pulse drain tube barb		1/8 inch
Gauge ports (2):		1/8 inch (can be used as additional full flow)
Weight:		0.4 lb (0.18 kg)

† scfm = Standard cubic feet per minute at 100 psig inlet and 10 psig pressure drop.

Ordering Information:

14E | **1** | **1** | **B** | **13** | **F** | **C** | ☐ | ☐ | ☐

Port Size

1/8 inch	0
1/4 inch	1

Bowl Options

Poly Bowl, Twist Drain	1
Poly Bowl, Auto Pulse Drain	5
Metal Bowl, Twist Drain	3
Metal Bowl, Auto Pulse Drain	7

Element

40 Micron	A
5 Micron	B
Adsorber	Z

Spring Type by Preset / Limited Pressure:
For Preset / Limited Pressure 10 to 25 use 30 psi spring
For Preset / Limited Pressure 26 to 50 use 60 psi spring
For Preset / Limited Pressure 51 to 90 use 125 psi spring

Pressure Range

Without Gauge		With Gauge*	
30 psig	10	30 psig	15
60 psig	11	60 psig	16
15 psig	12	15 psig	17
125 psig	13	125 psig	18

* Not available with BSPP or BSPT port types.

Relief

F	Relieving
G	Non-Relieving
H*	Low Temp. Relieving

* Twist drain only.

Engineering Level

C	Current

Port Type

Blank	NPT
1	BSPP
2	BSPT

Options

Blank	No Options
L†	Preset Non-Adjustable
P†	Preset Adjustable
S†	Pressure Limiter Max. Adjustable
T†	Pressure Limiter Max. Non-Adjustable

† Inlet pressure is 100 psig. For other pressures contact factory.

Preset / Pressure Limited

Blank	None
XXX*	Preset Pressure
XXX*	Pressure Limited

* Available preset / pressure limited range, 10 to 90 psig in 5 psig increments. For higher pressures, contact factory.

(Example: 065 = 65 psig)

☐ Most popular.

Parker Hannifin Corporation
Pneumatic Division
Richland, Michigan
www.parker.com/pneumatics

Tel: +45 63 12 83 00 | Email: ps@hymatik.com | www.hymatik.com | Hvidkaervej 27a, DK-5250 Odense SV, Denmark

Material Specifications

Adjusting nut	Brass
Adjusting stem & spring	Steel
Body	Zinc
Bonnet, knob, seat, piston, holder & deflector	Plastic
Transparent bowl	Polycarbonate
Metal bowl (without sight gauge)	Zinc
Twist drain, body & stem	Plastic
Twist drain, seals	Nitrile
Auto pulse drain, piston & seals	Nitrile
Auto pulse drain, stem, seat, adaptor & washers	Aluminum
5 Micron elements (standard)	Plastic
40 Micron elements (optional)	Plastic
Adsorber elements (optional)	Activated charcoal
Seals	Nitrile

Repair and Service Kits

Bonnet tamperproof kit	**P01265**
Poly bowl / auto drain	**PS408BP**
Poly bowl / twist drain	**PS404P**
Metal bowl / auto drain	**PS451BP**
Metal bowl / twist drain	**PS447BP**
40 micron element	**PS401P**
5 micron element	**PS403P**
Adsorber element	**PS452P**
30 psig (0 to 2.1 bar), gauge	**K4515N18030**
60 psig (0 to 4.1 bar), gauge	**K4515N18060**
160 psig (0 to 11.0 bar), gauge	**K4515N18160**
Mounting bracket kit* (includes panel mount nut)	**PS417BP**
Panel mount nut*	**P78652**
Unbalanced, non-relieving	**PS428P**
Unbalanced, relieving	**PS426P**
1- 15 psig spring (yellow)	**P01176**
1- 30 psig spring (black)	**P01175**
1- 60 psig spring (white)	**P01174**
2- 125 psig spring (gold)	**P01173**

***Tighten panel mount nut 2.8 to 3.4 Nm (25 to 30 in-lbs) of torque.**

⚠ WARNING

Product rupture can cause serious injury.
Do not connect regulator to bottled gas.
Do not exceed Maximum primary pressure rating.

CAUTION:

REGULATOR PRESSURE ADJUSTMENT – The working range of knob adjustment is designed to permit outlet pressures within their full range. Pressure adjustment beyond this range is also possible because the knob is not a limiting device. This is a common characteristic of most industrial regulators, and limiting devices may be obtained only by special design. For best performance, regulated pressure should always be set by increasing the pressure up to the desired setting.

Flow Charts

14E 1/8" Filter / Regulator

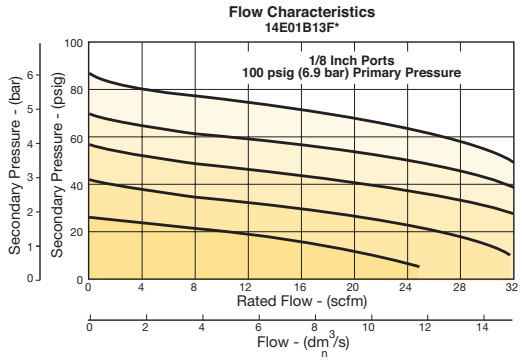

14E 1/4" Filter / Regulator

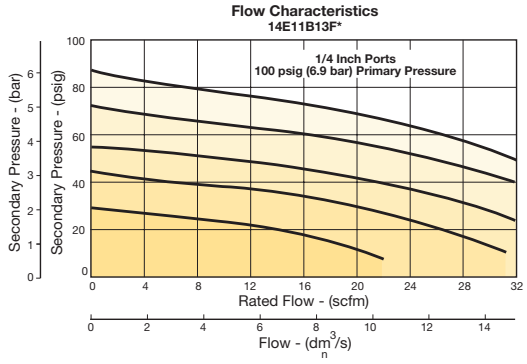

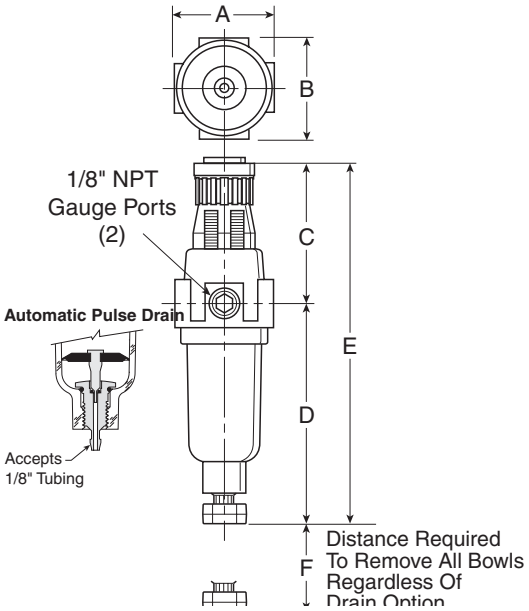

For inventory, lead times, and kit lookup, visit www.pdnplu.com

Parker Hannifin Corporation
Pneumatic Division
Richland, Michigan
www.parker.com/pneumatics

Tel: +45 63 12 83 00 | Email: ps@hymatik.com | www.hymatik.com | Hvidkaervej 27a, DK-5250 Odense SV, Denmark

04L Mist Lubricators – Miniature

- Proportional oil delivery over a wide range of air flows
- Precision needle valve assures repeatable oil delivery and provides simple adjustment of delivery rate
- Ideal for low and high flow applications with changing air flow
- Transparent sight dome for 360° visibility
- Integral 1/8", 1/4" ports (NPT, BSPP, BSPT)





Port Size	Description ‡	Part Number
1/8"	Poly Bowl, No Drain	**04L00GB**
1/8"	Metal Bowl, No Sight Gauge, Twist Drain	**04L03GB**
1/4"	Poly Bowl, No Drain	**04L10GB**
1/4"	Metal Bowl, No Sight Gauge, Twist Drain	**04L13GB**

‡ For polycarbonate bowl and sight dome, see caution in Engineering Section A.

Operating information

Supply pressure (max):		
Plastic bowl		0 to 150 psig (0 to 10.3 bar)
Metal bowl		0 to 250 psig (0 to 17.2 bar)
Operating temperature:		
Plastic bowl		32°F to 125°F (0°C to 52°C)
Metal bowl		32°F to 175°F (0°C to 80°C)
Flow capacity†:		
High flow	1/8"	20 scfm (9.4 dm^3/s, ANR)
	1/4"	20 scfm (9.4 dm^3/s, ANR)
Minimum flow		0.5 scfm (0.24 dm^3/s, ANR) at 100 psig (6.9 bar)
Bowl capacity:		1 oz.
Weight:		0.4 lb (0.18 kg)

† scfm = Standard cubic feet per minute at 90 psig inlet and 5 psig pressure drop.

Ordering Information:

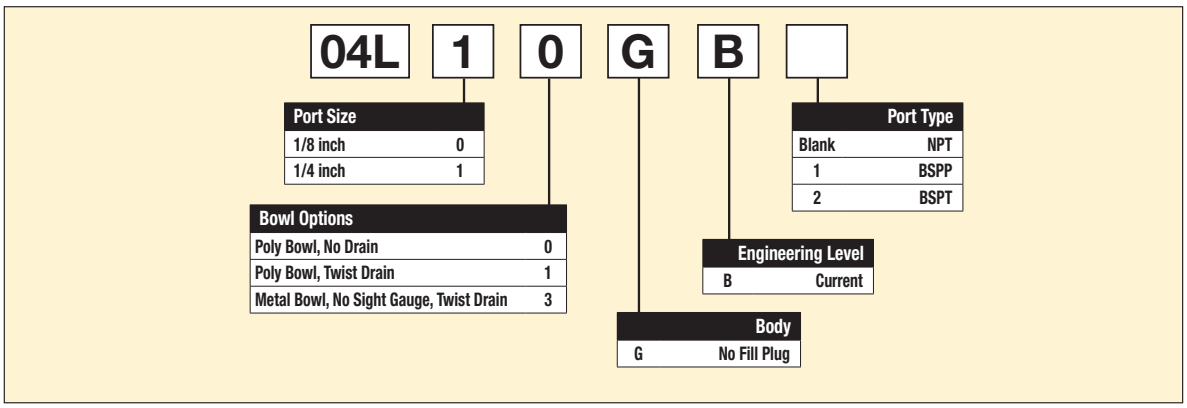

Suggested Lubricant .....**F442 Oil**
Petroleum based oil of 100 to 200 SUS viscosity at 100°F (38°C) and an aniline point greater than 200°F (93°C)
(DO NOT USE OILS WITH ADDITIVES, COMPOUNDED OILS CONTAINING SOLVENTS, GRAPHITE, DETERGENTS, OR SYNTHETIC OILS.)

☐ Most popular.

For inventory, lead times, and kit lookup, visit www.pdnplu.com

Parker Hannifin Corporation
Pneumatic Division
Richland, Michigan
www.parker.com/pneumatics

Tel: +45 63 12 83 00 | Email: ps@hymatik.com | www.hymatik.com | Hvidkaervej 27a, DK-5250 Odense SV, Denmark

Material Specifications

Body	Zinc
Transparent bowls	Polycarbonate
Metal bowl (without sight gauge)	Zinc
Drains, twist – body & nut	Plastic
Seals	Nitrile
Sight dome	Polycarbonate

Repair and Service Kits

Poly bowl / no drain kit	**PS421P**
Poly bowl / twist drain kit	**PS420P**
Metal bowl / twist drain (no sight gauge) kit	**PS447BP**
Mounting bracket kit	**PS419**
Oil (1 quart)	**F442001**
Oil (1 gallon)	**F442002**
Oil (12 quart case)	**F442003**
Oil (4 gallon case)	**F442005**

Flow Charts

04L 1/8" Lubricator

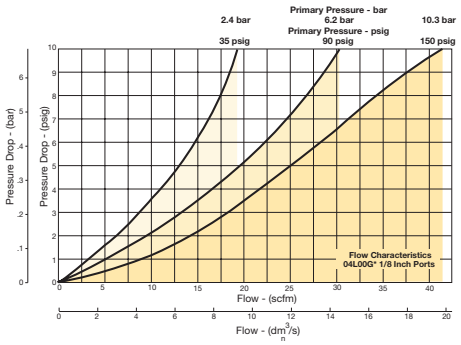

04L 1/4" Lubricator

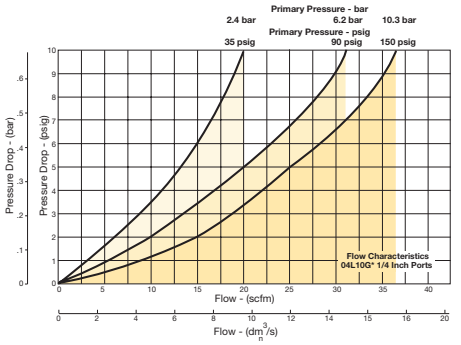

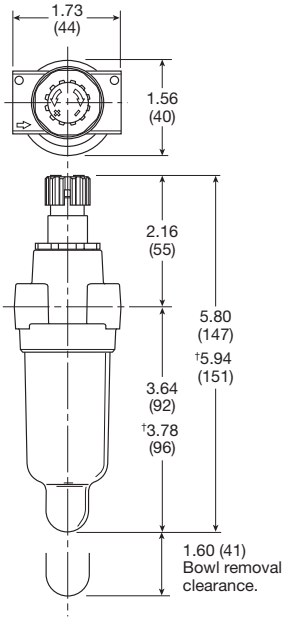

Inches (mm)

For inventory, lead times, and kit lookup, visit www.pdnplu.com

Parker Hannifin Corporation
Pneumatic Division
Richland, Michigan
www.parker.com/pneumatics

Tel: +45 63 12 83 00 | Email: ps@hymatik.com | www.hymatik.com | Hvidkaervej 27a, DK-5250 Odense SV, Denmark

14A / 14G Close Nippled Combinations – Miniature

Close Nippled Combinations – 14 Miniature Series

- Regulator can be mounted with knob in up or down position
- 5 micron filter element standard, 40 micron optional
- Manual twist drain
- Relieving regulator





Close Nippled Combinations

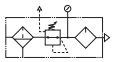



14G

Port Size	Bowl Type ‡	Element Type	Filter Drain Type	Relief Type	Lubricator Drain Type	Part Number (NPT)
1/8"	Poly	5 micron	Twist	Relieving	None	**14G01B13F0GD**
1/4"	Poly	5 micron	Twist	Relieving	None	**14G11B13F0GD**



14A

1/8"	Poly	5 micron	Twist	Relieving	None	**14A01B13F0GF**
1/4"	Poly	5 micron	Twist	Relieving	None	**14A11B13F0GF**

‡ For polycarbonate bowl, see caution in Engineering Section A.

Ordering Information:

14A 1 1 B 13 F 0 G *

Series	
3-Unit	14A
2-Unit	14G

Port Size	
1/8 inch	0
1/4 inch	1

Filter Bowl Options	
Poly Bowl, Twist Drain	1
Poly Bowl, Auto Pulse Drain	5
Metal Bowl, Twist Drain	3
Metal Bowl, Auto Pulse Drain	7

Filter Element	
40 Micron	A
5 Micron	B

Pressure Range			
Without Gauge		With Gauge	
10	30 psig	15	30 psig
11	60 psig	16	60 psig
12	15 psig	17	15 psig
13	125 psig	18	125 psig

Relief	
F	Relieving
G	Non-Relieving

Lubricator Bowl Options	
0	Poly Bowl, No Drain
1	Poly Bowl, Twist Drain
3	Metal Bowl, Twist Drain

Lubricator Body Options	
G	No Fill Plug

Engineering Level	
D	14G Current
F	14A Current

☐ Most popular.

For inventory, lead times, and kit lookup, visit www.pdnplu.com

Parker Hannifin Corporation
Pneumatic Division
Richland, Michigan
www.parker.com/pneumatics

Tel: +45 63 12 83 00 | Email: ps@hymatik.com | www.hymatik.com | Hvidkaervej 27a, DK-5250 Odense SV, Denmark

Close Nippled Combinations

14 Series

14G (Close nippled 2-unit)

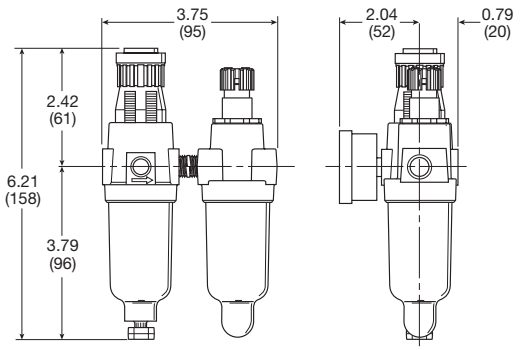

Inches (mm)

14A (Close nippled 3-unit)

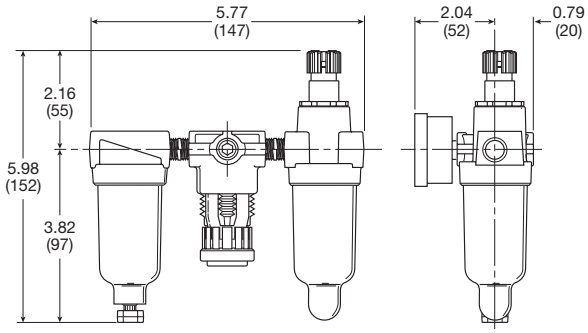

⚠ WARNING

Product rupture can cause serious injury.
Do not connect regulator to bottled gas.
Do not exceed Maximum primary pressure rating.

Service kits

Mounting bracket, 14E, 14F, 14R	**PS417BP**
Mounting bracket, 04L	**PS419**

CAUTION:

REGULATOR PRESSURE ADJUSTMENT – The working range of knob adjustment is designed to permit outlet pressures within their full range. Pressure adjustment beyond this range is also possible because the knob is not a limiting device. This is a common characteristic of most industrial regulators, and limiting devices may be obtained only by special design. For best performance, regulated pressure should always be set by increasing the pressure up to the desired setting.

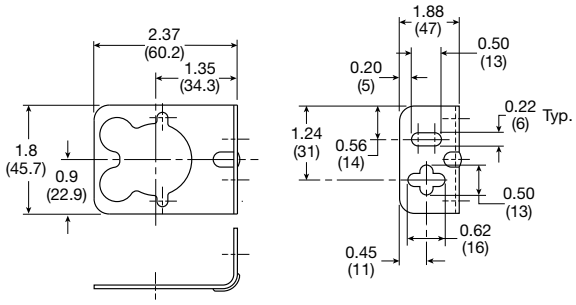

Inches (mm)

PS417BP - 10F, 14F, 14R, 14E
(Includes panel mount nut)

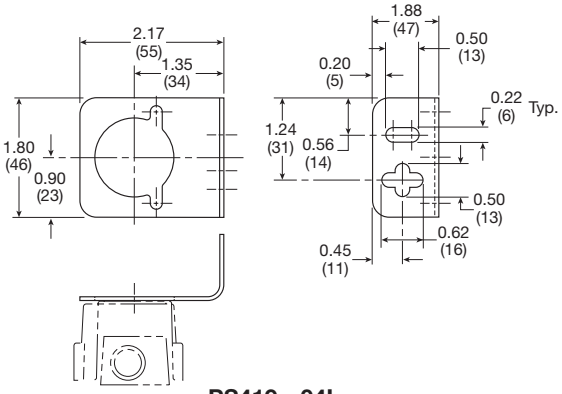

Inches (mm)

PS419 - 04L

For inventory, lead times, and kit lookup, visit www.pdnplu.com

Parker Hannifin Corporation
Pneumatic Division
Richland, Michigan
www.parker.com/pneumatics

Tel: +45 63 12 83 00 | Email: ps@hymatik.com | www.hymatik.com | Hvidkaervej 27a, DK-5250 Odense SV, Denmark

Parker Hannifin Corporation
Pneumatic Division
Richland, Michigan
www.parker.com/pneumatics

Tel: +45 63 12 83 00 | Email: ps@hymatik.com | www.hymatik.com | Hvidkaervej 27a, DK-5250 Odense SV, Denmark

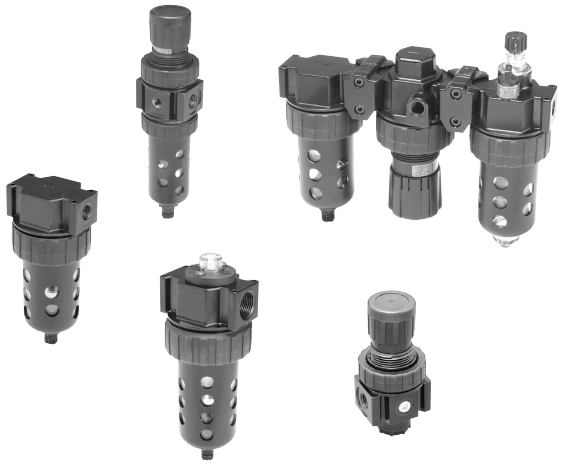

Air Preparation Products
Prep-Air® II Products

Particulate Filters

05F Economy	E2-E3
06F Compact	E4-E6
07F Standard	E7-E8

Coalescing Filters

15F Economy	E9-E10
11F Compact	E11-E12
12F Standard	E13-E14

Regulators

05R Economy	E15-E16
06R Compact	E17-E18
07R Standard	E19-E20

Pilot Controlled Regulators

11R Economy	E21-E22
12R Standard	E23-E24

Filter / Regulators

05E Economy	E25-E26
06E Compact	E27-E29
07E Standard	E30-E32
12E Coalescing	E33-E34

Lubricators

15L Economy, Micro-Mist	E35-E36
16L Compact, Micro-Mist	E37-E38
17L Standard, Micro-Mist	E39-E40
06L Compact, Mist	E41-E42
07L Standard, Mist	E43-E44

Combinations

06 Compact & 07 Standard, Close Nippled	E45-E46
06 Compact & 07 Standard, Modular	E47-E48
Accessories	E49-E50

Accessories

Mounting Bracket Kits	E51

Tel: +45 63 12 83 00 | Email: ps@hymatik.com | www.hymatik.com | Hvidkaervej 27a, DK-5250 Odense SV, Denmark

05F Particulate Filters – Economy

- Excellent water removal efficiency
- Unique deflector plate and shroud creates a swirling of the air stream ensuring maximum water and dirt separation
- Large filter element surface guarantees low pressure drop and increased element life
- 40 micron filter element standard
- Shown with recommended metal bowl guard
- 1/4" & 3/8" ports (NPT)



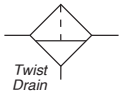

Operating information

Supply pressure (max):		
Plastic bowl		0 to 150 psig (0 to 10.3 bar)
Auto pulse drain		10 to 150 psig (0.7 to 10.3 bar)
Operating temperature:		
Plastic bowl		32°F to 125°F (0°C to 52°C)
Flow capacity†:		
High flow	1/4"	54 scfm (25.5 dm^3/s, ANR)
	3/8"	70 scfm (33 dm^3/s, ANR)
Bowl capacity:		2.0 oz.
Sump capacity:		0.9 oz.
Weight:		1.2 lb (0.54 kg)

† scfm = Standard cubic feet per minute at 90 psig inlet and 5 psig pressure drop.

Ordering Information:

Port Size	Description ‡	Part Number
1/4"	Poly Bowl, Metal Bowl Guard, Twist Drain, 40 Micron	**05F12AA**
3/8"	Poly Bowl, Metal Bowl Guard, Twist Drain, 40 Micron	**05F22AA**

‡ For polycarbonate bowl and sight dome, see caution in Engineering Section A.

☐ **Most popular.**

For inventory, lead times, and kit lookup, visit www.pdnplu.com

Parker Hannifin Corporation
Pneumatic Division
Richland, Michigan
www.parker.com/pneumatics

Tel: +45 63 12 83 00 | Email: ps@hymatik.com | www.hymatik.com | Hvidkaervej 27a, DK-5250 Odense SV, Denmark

Economy Particulate Filters

Prep-Air® II Series

Material Specifications

Body	Zinc
Transparent bowl	Polycarbonate
Bowl guards	Steel
Collar	Plastic
Deflector, shroud & baffle	Plastic
Drain	Plastic
Element	Plastic
Adsorber (optional)	Activated charcoal
Seals	Nitrile
Sight gauge	Polyamide (nylon)

Repair and Service Kits

Bowl guard kit	**PS905P**
Poly bowl / auto pulse drain	**PS995P**
Poly bowl / twist drain	**PS932P**
Auto pulse drain	**PS998P**
Twist drain	**PS512P**
40 micron element	**PS901P**
Adsorber	**PS931P**
Mounting bracket kit	**PS943P**
Sight gauge kit	**PS914P**

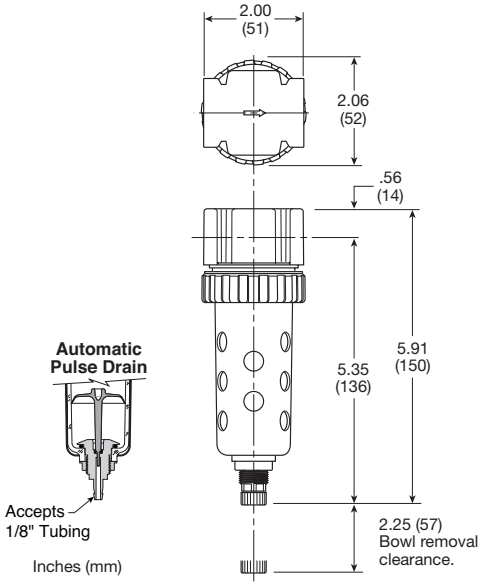

Flow Charts

05F 1/4" Particulate Filter

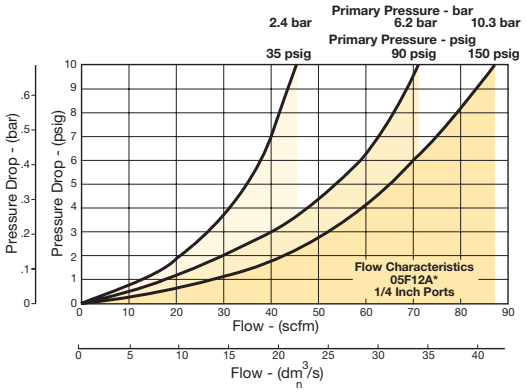

05F 3/8" Particulate Filter

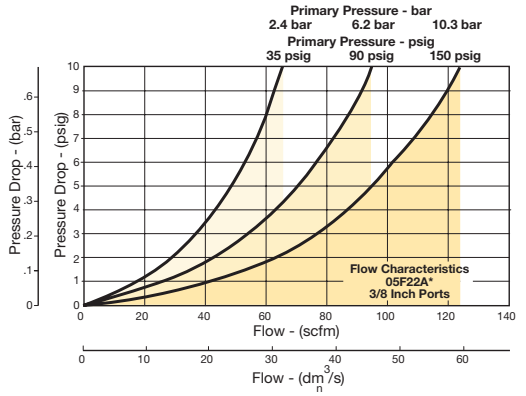

For inventory, lead times, and kit lookup, visit www.pdnplu.com

Parker Hannifin Corporation
Pneumatic Division
Richland, Michigan
www.parker.com/pneumatics

Tel: +45 63 12 83 00 | Email: ps@hymatik.com | www.hymatik.com | Hvidkaervej 27a, DK-5250 Odense SV, Denmark

06F Particulate Filters – Compact

- Excellent water removal efficiency
- Unique deflector plate and shroud creates a swirling of the air stream ensuring maximum water and dirt separation
- Large filter element surface guarantees low pressure drop and increased element life
- Optional automatic float drain available
- Shown with recommended metal bowl guard
- 1/4", 3/8", 1/2" ports – NPT



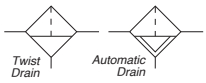

Operating information

Supply pressure (max):		
Without DPI		
Plastic bowl		0 to 150 psig (0 to 10.3 bar)
Metal bowl		0 to 250 psig (0 to 17.2 bar)
With DPI		0 to 150 psig (0 to 10.3 bar)
Auto float drain		15 to 250 psig (1.0 to 17.2 bar)
Operating temperature:		
Plastic bowl		32°F to 125°F (0°C to 52°C)
Metal bowl		32°F to 175°F (0°C to 80°C)
With DPI		32°F to 125°F (0°C to 52°C)
Flow capacity†:		
High flow	1/4"	53 scfm (25 dm^3/s, ANR)
	3/8"	80 scfm (37.8 dm^3/s, ANR)
	1/2"	85 scfm (40.1 dm^3/s, ANR)
Bowl capacity:		4.4 oz.
Sump capacity:		1.75 oz.
Weight:		1.4 lb (0.6 kg)

† scfm = Standard cubic feet per minute at 90 psig inlet and 5 psig pressure drop.

DPI = Differential pressure indicator

Ordering Information:

Port Size	Description ‡	Part Number
1/4"	Poly Bowl, Metal Bowl Guard, Twist Drain, 40 Micron	**06F12AC**
1/4"	Poly Bowl, Metal Bowl Guard, Twist Drain, 5 Micron	**06F12BC**
1/4"	Metal Bowl, Twist Drain, 40 Micron	**06F13AC**
1/4"	Metal Bowl, Sight Gauge, Twist Drain, 40 Micron	**06F14AC**
1/4"	Poly Bowl, Metal Bowl Guard, Auto Float Drain, 40 Micron	**06F16AC**
1/4"	Poly Bowl, Metal Bowl Guard, Auto Float Drain, 5 Micron	**06F16BC**
1/4"	Metal Bowl, Auto Float Drain, 40 Micron	**06F17AC**
1/4"	Metal Bowl, Auto Float Drain, 5 Micron	**06F17BC**
1/4"	Metal Bowl, Sight Gauge, Auto Float Drain, 40 Micron	**06F18AC**
1/4"	Metal Bowl, Sight Gauge, Auto Float Drain, 5 Micron	**06F18BC**
3/8"	Poly Bowl, Metal Bowl Guard, Twist Drain, 40 Micron	**06F22AC**
3/8"	Poly Bowl, Metal Bowl Guard, Twist Drain, 5 Micron	**06F22BC**

Continued on next page

For inventory, lead times, and kit lookup, visit www.pdnplu.com

Parker Hannifin Corporation
Pneumatic Division
Richland, Michigan
www.parker.com/pneumatics

Tel: +45 63 12 83 00 | Email: ps@hymatik.com | www.hymatik.com | Hvidkaervej 27a, DK-5250 Odense SV, Denmark

Ordering Information cont.:

Port Size	Description ‡	Part Number
3/8"	Metal Bowl, Sight Gauge, Twist Drain, 5 Micron	**06F24BC**
3/8"	Poly Bowl, Metal Bowl Guard, Auto Float Drain, 40 Micron	**06F26AC**
3/8"	Poly Bowl, Metal Bowl Guard, Auto Float Drain, 5 Micron	**06F26BC**
3/8"	Metal Bowl, Auto Float Drain, 5 Micron	**06F27BC**
3/8"	Metal Bowl, Sight Gauge, Auto Float Drain, 5 Micron	**06F28BC**
1/2"	Poly Bowl, Metal Bowl Guard, Twist Drain, 40 Micron	**06F32AC**
1/2"	Poly Bowl, Metal Bowl Guard, Twist Drain, 5 Micron	**06F32BC**
1/2"	Metal Bowl, Twist Drain, 40 Micron	**06F33AC**
1/2"	Metal Bowl, Sight Gauge, Twist Drain, 40 Micron	**06F34AC**
1/2"	Metal Bowl, Sight Gauge, Twist Drain, 5 Micron	**06F34BC**
1/2"	Poly Bowl, Metal Bowl Guard, Auto Float Drain, 40 Micron	**06F36AC**
1/2"	Poly Bowl, Metal Bowl Guard, Auto Float Drain, 5 Micron	**06F36BC**
1/2"	Metal Bowl, Sight Gauge, Auto Float Drain, 40 Micron	**06F38AC**
1/2"	Metal Bowl, Sight Gauge, Auto Float Drain, 5 Micron	**06F38BC**
G3/8	Poly Bowl, Metal Bowl Guard, Twist Drain, 40 Micron	**06F22AC1**
G1/2"	Poly Bowl, Metal Bowl Guard, Twist Drain, 5 Micron	**06F32BC1**
G1/2"	Metal Bowl, Sight Gauge, Twist Drain, 5 Micron	**06F34BC1**

‡ For polycarbonate bowl and sight dome, see caution in Engineering Section A.

Most popular.

Tel: +45 63 12 83 00 | Email: ps@hymatik.com | www.hymatik.com | Hvidkaervej 27a, DK-5250 Odense SV, Denmark

Material Specifications

Body	Zinc
Transparent bowl	Polycarbonate
Metal bowl with or without sight gauge	Zinc
Bowl Guards	Steel
Collar	Plastic
Deflector, shroud & baffle	Plastic
Twist drain - body & nut	Plastic
Auto float drain - housing, float	Plastic
Auto float drain - seals	Nitrile
Auto float drain - springs, push rod	Stainless steel
Element	Plastic
Adsorber (optional)	Activated charcoal
Seals	Nitrile
Sight gauge	Polyamide

Repair and Service Kits

Bowl guard kit	**PS705P**
Poly bowl / auto float drain kit	**PS722P**
Poly bowl / twist drain kit	**PS732P**
Metal bowl / auto float drain kit	**PS726P**
Metal bowl / twist drain kit	**PS734P**
Metal bowl / sight gauge / auto float drain kit	**PS723P**
Metal bowl / sight gauge / twist drain kit	**PS735P**
Auto float drain kit	**PS506P**
Twist drain kit	**PS512P**
40 micron element	**PS701P**
5 micron element	**PS702P**
Adsorber element	**PS731P**
Mounting bracket kit	**PS743P**
Sight gauge kit	**PS914P**

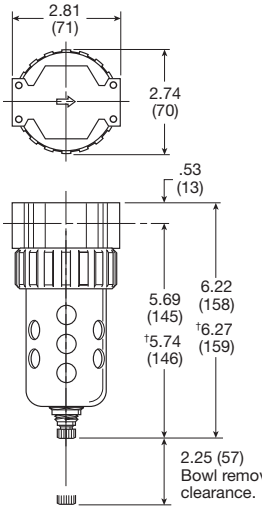

† With auto float drain

Inches (mm)

Flow Charts

06F 1/4" Particulate Filter

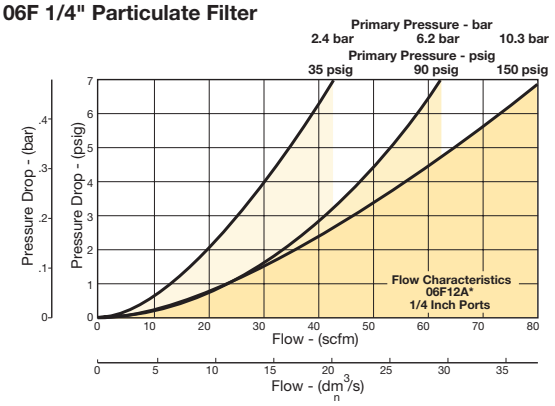

06F 3/8" Particulate Filter

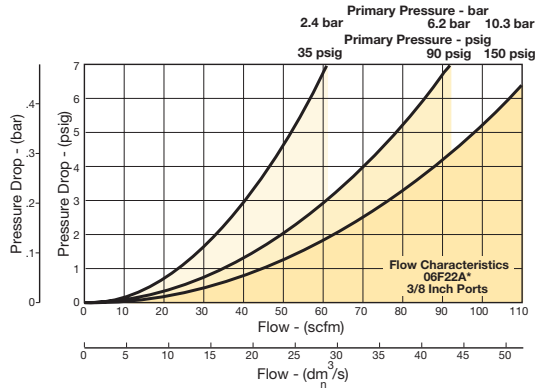

06F 1/2" Particulate Filter

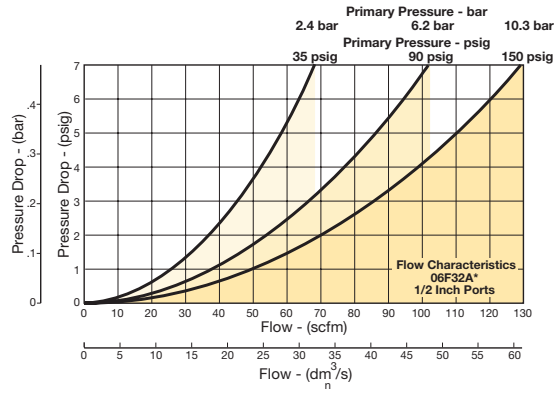

Tel: +45 63 12 83 00 | Email: ps@hymatik.com | www.hymatik.com | Hvidkaervej 27a, DK-5250 Odense SV, Denmark

07F Particulate Filters – Standard

- Excellent water removal efficiency
- Unique deflector plate and shroud creates a swirling of the air stream ensuring maximum water and dirt separation
- Large filter element surface guarantees low pressure drop and increased element life
- Optional automatic float drain available
- Shown with recommended metal bowl guard
- 1/2", 3/4" ports – NPT

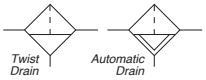



Operating information

Supply pressure (max):		
Without DPI		
Plastic bowl		0 to 150 psig (0 to 10.3 bar)
Metal bowl		0 to 250 psig (0 to 17.2 bar)
With DPI		0 to 150 psig (0 to 10.3 bar)
Auto float drain		15 to 250 psig (1.0 to 17.2 bar)
Operating temperature:		
Plastic bowl		32°F to 125°F (0°C to 52°C)
Metal bowl		32°F to 175°F (0°C to 80°C)
With DPI		32°F to 125°F (0°C to 52°C)
Flow capacity†:		
High flow	1/2"	130 scfm (61.4 dm^3/s, ANR)
	3/4"	145 scfm (68.4 dm^3/s, ANR)
Bowl capacity:		7.2 oz.
Sump capacity:		2.8 oz.
Weight:		2.2 lb (1.0 kg)

† scfm = Standard cubic feet per minute at 90 psig inlet and 5 psig pressure drop.

DPI = Differential pressure indicator

Ordering Information:

Port Size	Description ‡	Part Number
1/2"	Poly Bowl, Metal Bowl Guard, Twist Drain, 40 Micron	**07F32AC**
1/2"	Poly Bowl, Metal Bowl Guard, Twist Drain, 5 Micron	**07F32BC**
1/2"	Metal Bowl, Twist Drain, 40 Micron	**07F33AC**
1/2"	Metal Bowl, Sight Gauge, Twist Drain, 40 Micron	**07F34AC**
1/2"	Metal Bowl, Sight Gauge, Twist Drain, 5 Micron	**07F34BC**
1/2"	Poly Bowl, Metal Bowl Guard, Auto Float Drain, 40 Micron	**07F36AC**
1/2"	Poly Bowl, Metal Bowl Guard, Auto Float Drain, 5 Micron	**07F36BC**
1/2"	Metal Bowl, Auto Float Drain, 40 Micron	**07F37AC**
1/2"	Metal Bowl, Sight Gauge, Auto Float Drain, 40 Micron	**07F38AC**
1/2"	Metal Bowl, Sight Gauge, Auto Float Drain, 5 Micron	**07F38BC**
3/4"	Poly Bowl, Metal Bowl Guard, Twist Drain, 40 Micron	**07F42AC**
3/4"	Poly Bowl, Metal Bowl Guard, Twist Drain, 5 Micron	**07F42BC**
3/4"	Metal Bowl, Sight Gauge, Twist Drain, 40 Micron	**07F44AC**
3/4"	Metal Bowl, Sight Gauge, Twist Drain, 5 Micron	**07F44BC**
3/4"	Poly Bowl, Metal Bowl Guard, Auto Float Drain, 40 Micron	**07F46AC**
3/4"	Poly Bowl, Metal Bowl Guard, Auto Float Drain, 5 Micron	**07F46BC**
3/4"	Metal Bowl, Auto Float Drain, 40 Micron	**07F47AC**
3/4"	Metal Bowl, Sight Gauge, Auto Float Drain, 40 Micron	**07F48AC**

‡ For polycarbonate bowl and sight dome, see caution in Engineering Section A.

☐ Most popular.

For inventory, lead times, and kit lookup, visit www.pdnplu.com

Parker Hannifin Corporation
Pneumatic Division
Richland, Michigan
www.parker.com/pneumatics

Tel: +45 63 12 83 00 | Email: ps@hymatik.com | www.hymatik.com | Hvidkaervej 27a, DK-5250 Odense SV, Denmark

Material Specifications

Body	Zinc
Transparent bowl	Polycarbonate
Metal bowl with or without sight gauge	Zinc
Bowl guards	Steel
Collar	Plastic or metal
Deflector, shroud & baffle	Plastic
Twist drain, body & nut	Plastic
Auto float drain – housing, float	Plastic
Auto float drain – seals	Nitrile
Auto float drain – springs, push rod	Stainless steel
Element	Plastic
Adsorber element (optional)	Activated charcoal
Seals	Nitrile
Sight gauge	Polyamide

Repair and Service Kits

Bowl guard kit	**PS805P**
Poly bowl / auto float drain kit	**PS822P**
Poly bowl / twist drain kit	**PS832P**
Metal bowl / auto float drain kit	**PS826P**
Metal bowl / twist drain kit	**PS834P**
Metal bowl / sight gauge / auto drain kit	**PS823P**
Metal bowl / sight gauge / twist drain kit	**PS835P**
Auto float drain kit	**PS506P**
Twist drain kit	**PS512P**
40 micron element	**PS801P**
5 micron element	**PS802P**
Adsorber element	**PS831P**
Mounting bracket kit	**PS843P**
Sight gauge kit	**PS914P**

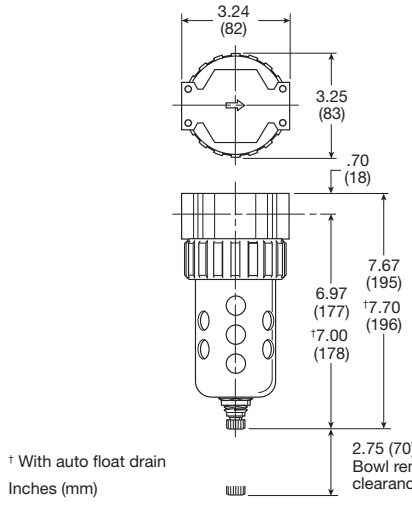

† With auto float drain
Inches (mm)

Flow Charts

07F 1/2" Particulate Filter

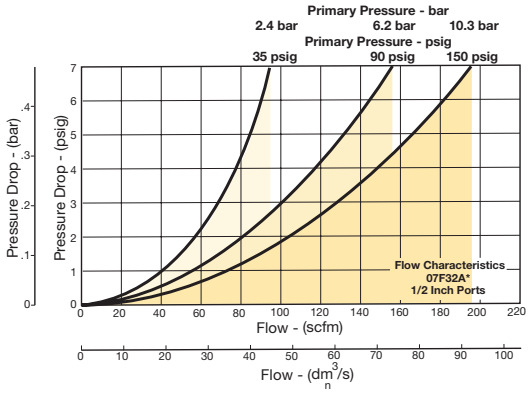

07F 3/4" Particulate Filter

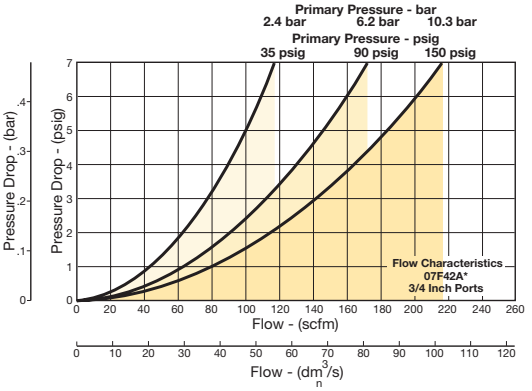

For inventory, lead times, and kit lookup, visit www.pdnplu.com

Parker Hannifin Corporation
Pneumatic Division
Richland, Michigan
www.parker.com/pneumatics

Tel: +45 63 12 83 00 | Email: ps@hymatik.com | www.hymatik.com | Hvidkaervej 27a, DK-5250 Odense SV, Denmark

15F Coalescing Filters – Economy

- Removes liquid aerosols and sub-micron particles.
- Liquids gravitate to the bottom of the element and will not re-enter the airstream.
- Oil free air for critical applications, such as air gauging and pneumatic instrumentation and controls.
- Interchangeable twist and automatic pulse drains.
- Differential pressure indicator standard.
- 1/4" & 3/8" ports – (NPT)



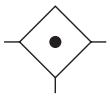

Operating information

Supply pressure (max):		
Plastic bowl		
Without DPI		0 to 150 psig (0 to 10.3 bar)
With DPI		0 to 150 psig (0 to 10.3 bar)
Auto pulse drain		10 to 150 psig (0.7 to 10.3 bar)
Operating temperature:		
Plastic bowl		32°F to 125°F (0°C to 52°C)
With DPI		32°F to 125°F (0°C to 52°C)
Flow capacity†:	Grade 6	1/8" 30 scfm (14.2 dm^3/s, ANR)
		1/4" 30 scfm (14.2 dm^3/s, ANR)
Bowl capacity:		2.0 oz.
Sump capacity:		0.9 oz.
Weight:		1.2 lb (0.54 kg)

† scfm = Standard cubic feet per minute at 90 psig inlet and 5 psig pressure drop.
DPI = Differential pressure indicator

Ordering Information:

Port Size	Description ‡	Part Number
1/4"	Poly Bowl, Metal Bowl Guard, Twist Drain, Grade 6 (0.01)	**15F12EA**
3/8"	Poly Bowl, Metal Bowl Guard, Twist Drain, Grade 6 (0.01)	**15F22EA**

‡ For polycarbonate bowl, see caution in Engineering Section A.

☐ Most popular.

For inventory, lead times, and kit lookup, visit www.pdnplu.com

Parker Hannifin Corporation
Pneumatic Division
Richland, Michigan
www.parker.com/pneumatics

Tel: +45 63 12 83 00 | Email: ps@hymatik.com | www.hymatik.com | Hvidkaervej 27a, DK-5250 Odense SV, Denmark

Material Specifications

Body	Zinc
Transparent bowl	Polycarbonate
Bowl guards	Steel
Collar	Plastic
Drain	Plastic
Element	Borosilicate & felt glass fibers
Seals	Nitrile
Sight gauge, DPI	Polyamide (nylon)

Repair and Service Kits

Bowl Guard Kit	**PS905P**
Poly bowl / automatic pulse drain kit	**PS995P**
Poly bowl / twist drain kit	**PS932P**
DPI replacement kit	**PS781P**
Electronic DPI replacement kit	**PS764**
Automatic pulse drain kit	**PS998P**
Twist drain kit	**PS512P**
Electrical connector: 15mm, 3-pin DIN, 6 ft. cord	**PS2932JBP**
Filter element kits – Grade 6 (standard)	**PS924P**
Mounting bracket kit	**PS943P**
Sight gauge kit	**PS914P**

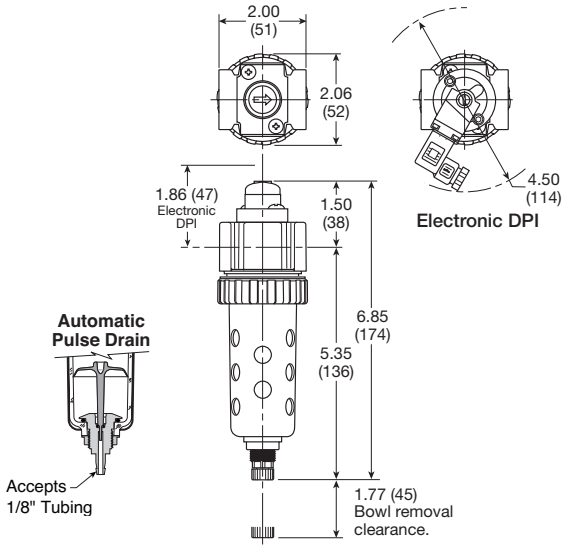

Inches (mm)

Flow Charts

Grade 6 Element

15F 1/4" Coalescing Filter

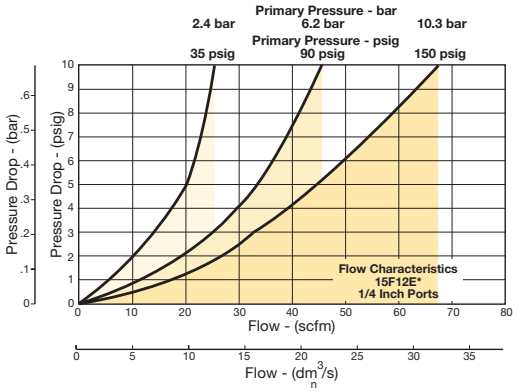

15F 3/8" Coalescing Filter

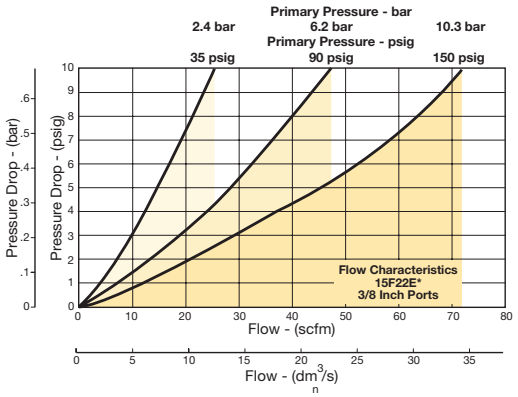

For inventory, lead times, and kit lookup, visit www.pdnplu.com

Parker Hannifin Corporation
Pneumatic Division
Richland, Michigan
www.parker.com/pneumatics

11F Coalescing Filters – Compact

- Removes liquid aerosols and sub-micron particles.
- Liquids gravitate to the bottom of the element and will not re-enter the airstream
- Oil free air for critical applications, such as air gauging and pneumatic instrumentation and controls.
- Interchangeable twist and automatic float drains.
- Differential pressure indicator standard.
- Shown with recommended metal bowl guard.
- 1/4", 3/8", 1/2" ports (NPT)





Operating information

Supply pressure (max):		
Without DPI		
Plastic bowl		0 to 150 psig (0 to 10.3 bar)
Metal bowl		0 to 250 psig (0 to 17.2 bar)
With DPI		0 to 150 psig (0 to 10.3 bar)
Auto float drain		15 to 250 psig (1.0 to 17.2 bar)
Operating pressure drop:		
Normal		2 psig (0.14 bar)
Max recommended (Element should be replaced)		10 psig (0.7 bar)
Minimum recommended flow:		20% nominal rating of element
Operating temperature:		
Plastic bowl		32°F to 125°F (0°C to 52°C)
Metal bowl		32°F to 175°F (0°C to 80°C)
With DPI		32°F to 125°F (0°C to 52°C)
Flow capacity†:	Grade 6 (0.01 micron)	1/4" 45 scfm (21 dm^3/s, ANR)
		3/8" 48 scfm (23 dm^3/s, ANR)
		1/2" 65 scfm (31 dm^3/s, ANR)
	Grade 10 (1.0 micron)	1/4" 60 scfm (28.3 dm^3/s, ANR)
		3/8" 72 scfm (34 dm^3/s, ANR)
		1/2" 95 scfm (45 dm^3/s, ANR)
Bowl capacity:		4.4 oz.
Sump capacity:		1.75 oz.
Weight:		1.5 lb (0.7 kg)

† scfm = Standard cubic feet per minute at 90 psig inlet and 5 psig pressure drop.
DPI = Differential pressure indicator

Ordering Information:

Port Size	Description ‡	Part Number
1/4"	Poly Bowl, Metal Bowl Guard, Twist Drain, Grade 6 (0.01)	**11F12EC**
1/4"	Metal Bowl, Twist Drain, Grade 6 (0.01), W/Out Dpi	**11F13ECN**
1/4"	Metal Bowl, Twist Drain, Grade 10 (1.0), W/Out Dpi	**11F13HCN**
1/4"	Metal Bowl, Sight Gauge, Twist Drain, Grade 6 (0.01)	**11F14EC**
1/4"	Poly Bowl, Metal Bowl Guard, Auto Float Drain, Grade 6 (0.01)	**11F16EC**
1/4"	Metal Bowl, Sight Gauge, Auto Float Drain, Grade 6 (0.01)	**11F18EC**
3/8"	Poly Bowl, Metal Bowl Guard, Twist Drain, Grade 6 (0.01)	**11F22EC**
3/8"	Poly Bowl, Metal Bowl Guard, Auto Float Drain, Grade 6 (0.01)	**11F26EC**
3/8"	Metal Bowl, Auto Float Drain, Grade 6 (0.01)	**11F27EC**
3/8"	Metal Bowl, Sight Gauge, Auto Float Drain, Grade 6 (0.01)	**11F28EC**
1/2"	Poly Bowl, Metal Bowl Guard, Twist Drain, Grade 6 (0.01)	**11F32EC**
1/2"	Metal Bowl, Sight Gauge, Twist Drain, Grade 6 (0.01)	**11F34EC**
1/2"	Poly Bowl, Metal Bowl Guard, Auto Float Drain, Grade 6 (0.01)	**11F36EC**
1/2"	Metal Bowl, Auto Float Drain, Grade 6 (0.01)	**11F37EC**

‡ For polycarbonate bowl, see caution in Engineering Section A.

☐ Most popular.

For inventory, lead times, and kit lookup, visit www.pdnplu.com

Parker Hannifin Corporation
Pneumatic Division
Richland, Michigan
www.parker.com/pneumatics

Tel: +45 63 12 83 00 | Email: ps@hymatik.com | www.hymatik.com | Hvidkaervej 27a, DK-5250 Odense SV, Denmark

Material Specifications

Body	Zinc
Transparent bowl	Polycarbonate
Metal bowl	Zinc
Bowl guard	Steel
Collar	Plastic
Twist drain, body & nut	Plastic
Automatic float drain, housing, float	Plastic
Automatic float drain, seals	Nitrile
Automatic float drain, springs, push rod	Stainless steel
Element	Borosilicate & felt glass fibers
Seals	Nitrile
Sight gauge	Polyamide

Repair and Service Kits

Bowl guard kit	**PS705P**
Poly bowl / automatic float drain kit	**PS722P**
Poly bowl / twist drain kit	**PS732P**
Metal bowl / automatic float drain kit	**PS726P**
Metal bowl / twist drain kit	**PS734P**
Metal bowl / sight gauge / automatic float drain kit	**PS723P**
Metal bowl / sight gauge / twist drain kit	**PS735P**
DPI replacement kit	**PS781P**
Automatic float drain kit	**PS506P**
Twist drain kit	**PS512P**
Electrical connector: 15mm, 3-pin DIN, 6 ft. cord	**PS2932JBP**
Grade 6 element (standard)	**PS724P**
Grade 10 element (optional)	**PS730P**
Mounting bracket kit	**PS743P**
Sight gauge kit	**PS914P**

Flow Charts

Grade 6

Grade 10

11F 1/4" Coalescing Filter

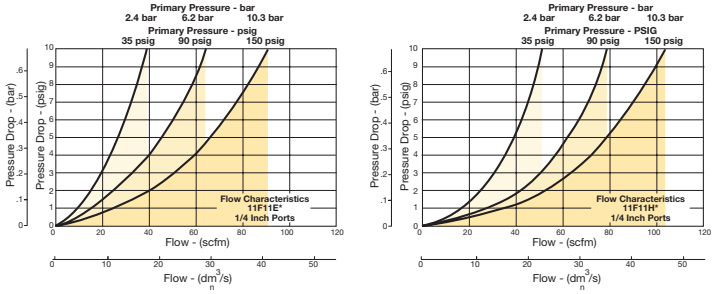

11F 3/8" Coalescing Filter

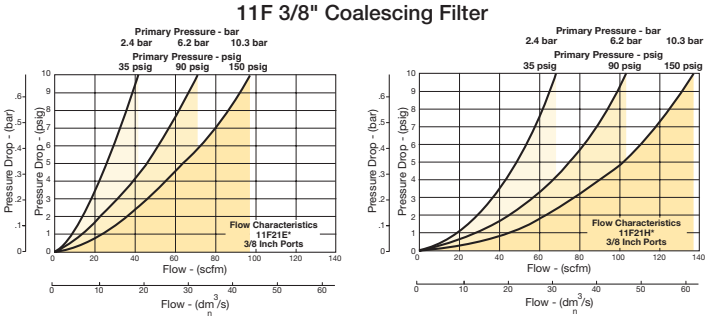

11F 1/2" Coalescing Filter

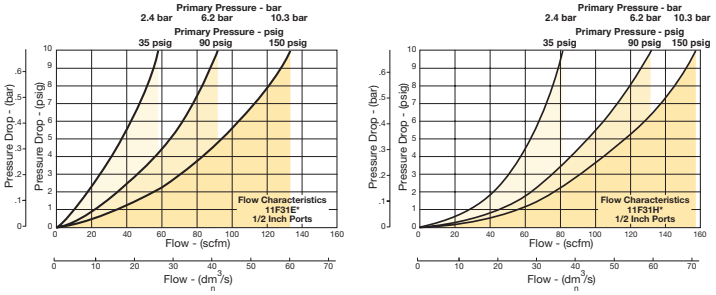

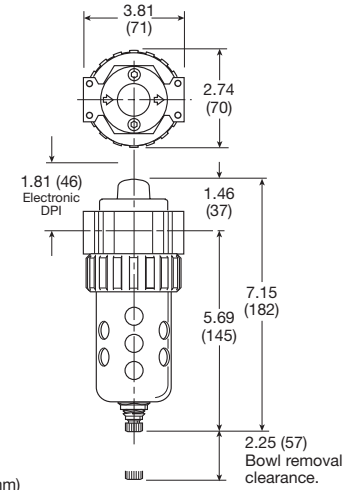

Inches (mm)

For inventory, lead times, and kit lookup, visit www.pdnplu.com

Parker Hannifin Corporation
Pneumatic Division
Richland, Michigan
www.parker.com/pneumatics

Tel: +45 63 12 83 00 | Email: ps@hymatik.com | www.hymatik.com | Hvidkaervej 27a, DK-5250 Odense SV, Denmark

12F Coalescing Filters – Standard

- Removes liquid aerosols and sub-micron particles
- Liquids gravitate to the bottom of the element and will not re-enter the airstream
- Oil free air for critical applications, such as air gauging and pneumatic instrumentation and controls
- Interchangeable twist and automatic float drains
- Differential pressure indicator standard
- Shown with recommended metal bowl guard
- 1/2", 3/4" ports (NPT)



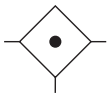

Operating information

Supply pressure (max):		
Without DPI		
Plastic bowl		0 to 150 psig (0 to 10.3 bar)
Metal bowl		0 to 250 psig (0 to 17.2 bar)
With DPI		0 to 150 psig (0 to 10.3 bar)
Auto float drain		15 to 250 psig (1.0 to 17.2 bar)
Operating pressure drop:		
Normal		2 psig (0.14 bar)
Max recommended (Element should be replaced)		10 psig (0.7 bar)
Minimum recommended flow:		20% nominal rating of element
Operating temperature:		
Plastic bowl		32°F to 125°F (0°C to 52°C)
Metal bowl		32°F to 175°F (0°C to 80°C)
With DPI		32°F to 125°F (0°C to 52°C)
Flow capacity†:	Grade 6	1/2" 75 scfm (35.4 dm^3/s, ANR)
		3/4" 80 scfm (37.7 dm^3/s, ANR)
	Grade 10	1/2" 125 scfm (59 dm^3/s, ANR)
		3/4" 160 scfm (75.5 dm^3/s, ANR)
Bowl capacity:		7.2 oz.
Sump capacity:		2.8 oz.
Weight:		2.4 lb (1.1 kg)

† scfm = Standard cubic feet per minute at 90 psig inlet and 5 psig pressure drop.
DPI = Differential pressure indicator

Ordering Information:

Port Size	Description ‡	Part Number
1/2"	Poly Bowl, Metal Bowl Guard, Twist Drain, Grade 6 (0.01)	**12F32EC**
1/2"	Poly Bowl, Metal Bowl Guard, Twist Drain, Grade 6 (0.01), W/Out Dpi	**12F32ECN**
1/2"	Poly Bowl, Metal Bowl Guard, Twist Drain, Grade 10 (1.0)	**12F32HC**
1/2"	Poly Bowl, Metal Bowl Guard, Twist Drain, Grade 10 (1.0), W/Out Dpi	**12F32HCN**
1/2"	Metal Bowl, Sight Gauge, Twist Drain, Grade 6 (0.01)	**12F34EC**
1/2"	Metal Bowl, Sight Gauge, Twist Drain, Grade 6 (0.01), W/Out Dpi	**12F34ECN**
1/2"	Poly Bowl, Metal Bowl Guard, Auto Float Drain, Grade 6 (0.01)	**12F36EC**
1/2"	Poly Bowl, Metal Bowl Guard, Auto Float Drain, Grade 6 (0.01), W/Out Dpi	**12F36ECN**
1/2"	Metal Bowl, Sight Gauge, Auto Float Drain, Grade 6 (0.01)	**12F38EC**
1/2"	Metal Bowl, Sight Gauge, Auto Float Drain, Grade 10 (1.0)	**12F38HC**
3/4"	Poly Bowl, Metal Bowl Guard, Twist Drain, Grade 6 (0.01)	**12F42EC**
3/4"	Poly Bowl, Metal Bowl Guard, Auto Float Drain, Grade 6 (0.01)	**12F46EC**
3/4"	Metal Bowl, Auto Float Drain, Grade 10 (1.0)	**12F47HC**
3/4"	Metal Bowl, Sight Gauge, Auto Float Drain, Grade 6 (0.01)	**12F48EC**

‡ For polycarbonate bowl, see caution in Engineering Section A.

☐ Most popular.

Tel: +45 63 12 83 00 | Email: ps@hymatik.com | www.hymatik.com | Hvidkaervej 27a, DK-5250 Odense SV, Denmark

Material Specifications

Body	Zinc
Transparent bowl	Polycarbonate
Metal bowl with or without sight gauge	Zinc
Bowl guard	Steel
Collar	Plastic or metal
Twist drain, body & nut	Plastic
Automatic float drain, housing, float	Plastic
Automatic float drain, seals	Nitrile
Automatic float drain, springs, push rod	Stainless steel
Element	Borosilicate & felt glass fibers
Seals	Nitrile
Sight gauge	Polyamide

Repair and Service Kits

Bowl guard kit	**PS805P**
Poly bowl / automatic float drain kit	**PS822P**
Poly bowl / twist drain kit	**PS832P**
Metal bowl / automatic float drain kit	**PS826P**
Metal bowl / twist drain kit	**PS834P**
Metal bowl / sight gauge / automatic float drain kit	**PS823P**
Metal bowl / sight gauge / twist drain kit	**PS835P**
DPI replacement kit	**PS781P**
Automatic float drain kit	**PS506P**
Twist drain kit	**PS512P**
Electrical connector: 15mm, 3-pin DIN, 6 ft. cord	**PS2932JBP**
Grade 6 element (standard)	**PS824P**
Grade 10 element (optional)	**PS830P**
Mounting bracket kit	**PS843P**
Sight gauge kit	**PS914P**

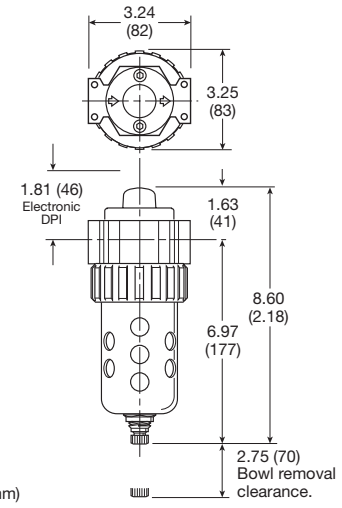

Inches (mm)

Flow Charts

Grade 6 Element

12F 1/2" Coalescing Filter

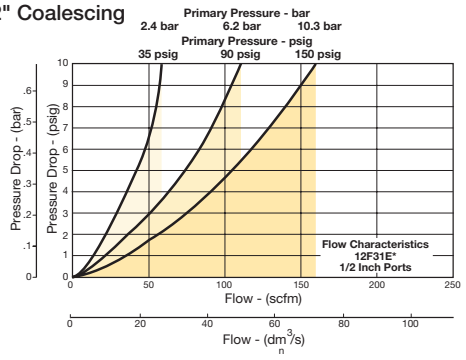

12F 3/4" Coalescing Filter

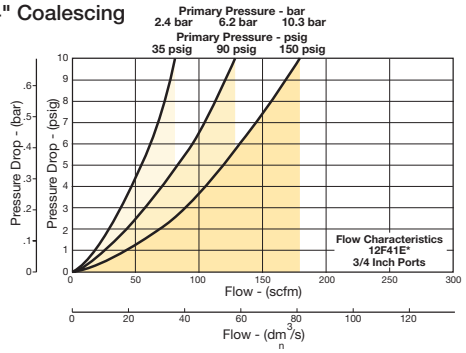

Grade 10 Element

12F 1/2" Coalescing Filter

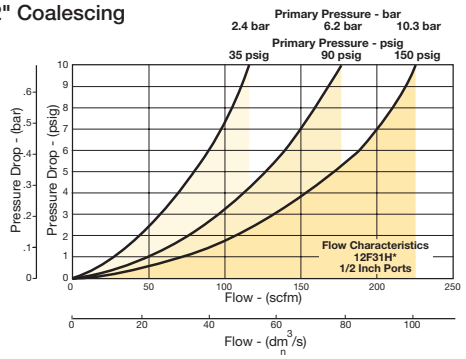

12F 3/4" Coalescing Filter

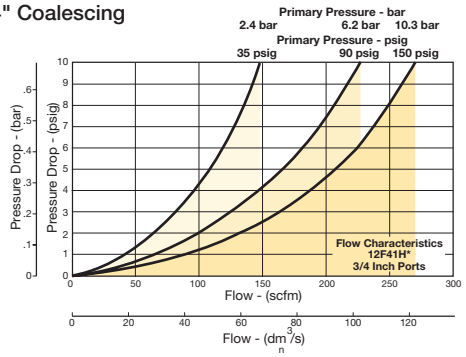

For inventory, lead times, and kit lookup, visit www.pdnplu.com

Parker Hannifin Corporation
Pneumatic Division
Richland, Michigan
www.parker.com/pneumatics

Tel: +45 63 12 83 00 | Email: ps@hymatik.com | www.hymatik.com | Hvidkaervej 27a, DK-5250 Odense SV, Denmark

05R Regulators – Economy

- Secondary aspiration plus balanced poppet provides quick response and accurate pressure regulation
- Rolling diaphragm for extended life
- Removable non-rising knob for panel mounting and tamper resistance
- Easily serviced
- Reverse flow
- 1/4", 3/8" ports (NPT)



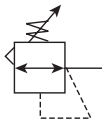

Operating information

Supply pressure (max):		0 to 300 psig (0 to 20.7 bar)
For secondary pressure ranges see charts next page.		
Operating temperature:		32°F to 175°F (0°C to 80°C)
Low temperature		-4°F to 125°F (-20°C to 52°C)
Flow capacity†:		
High flow	1/4"	30 scfm (14.2 dm^3/s, ANR)
	3/8"	40 scfm (18.9 dm^3/s, ANR)
Gauge ports (2):		1/4 inch
Weight:		1.1 lb (0.49 kg)

† scfm = Standard cubic feet per minute at 100 psig inlet, 90 psig no flow secondary setting and 10 psig pressure drop.

Ordering Information:

Port Size	Description	Part Number
1/4"	2-125 psi w/out Gauge, Relieving	**05R113AD**
1/4"	2-200 psi w/out Gauge, Relieving	**05R114AD**
3/8"	2-125 psi w/out Gauge, Relieving	**05R213AD**
3/8"	2-200 psi w/out Gauge, Relieving	**05R214AD**

NOTE: 1.53 Dia. (39 mm) hole required for panel mounting.

☐ Most popular.

For inventory, lead times, and kit lookup, visit www.pdnplu.com

Parker Hannifin Corporation
Pneumatic Division
Richland, Michigan
www.parker.com/pneumatics

Tel: +45 63 12 83 00 | Email: ps@hymatik.com | www.hymatik.com | Hvidkaervej 27a, DK-5250 Odense SV, Denmark

Material Specifications

Adjusting stem	Brass
Bonnet	Plastic
Body	Zinc
Collar, Knob	Plastic
Diaphragm	Nitrile
Poppet & cap	Plastic
Seals	Nitrile
Springs – poppet & control	Steel

Repair and Service Kits

Bonnet assembly kit	**PS915P**
Control knob	**P04420**
1-1/2" dial face 30 psig (0 to 2.1 bar), gauge	**K4515N14030**
1-1/2" dial face 60 psig (0 to 4.1 bar), gauge	**K4515N14060**
1-1/2" dial face 160 psig (0 to 11.0 bar), gauge	**K4515N14160**
1-1/2" dial face 300 psig (0 to 20.7 bar), gauge	**K4515N14300**
2" dial face 60 psig (0 to 4.1 bar), gauge	**K4520N14060**
2" dial face 160 psig (0 to 11.0 bar), gauge	**K4520N14160**
2" dial face 300 psig (0 to 20.7 bar), gauge	**K4520N14300**
Mounting bracket kit	**PS963P**
Panel mount nut – metal	**PS964P**
1-30 psig spring	**P04427**
1-60 psig spring	**P04426**
2-125 psig spring	**P04425**
2-200 psig spring	**P02934**
Relieving service kit	**PS908P**

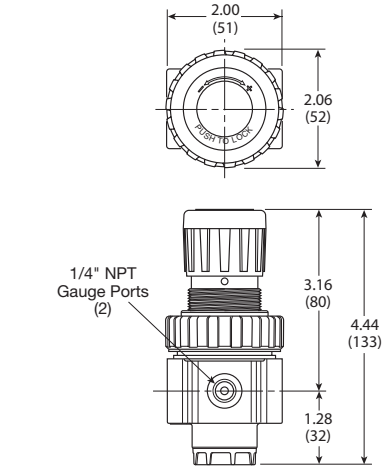

Inches (mm)

Flow Charts

05R 1/4" Regulator

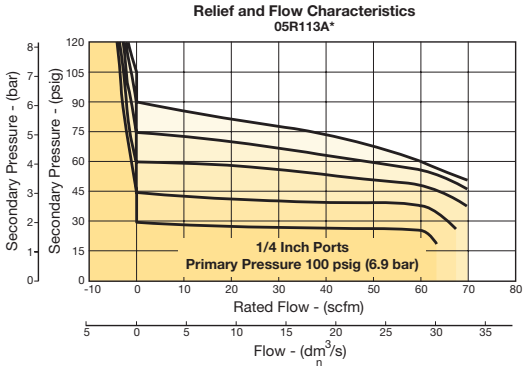

05R 3/8" Regulator

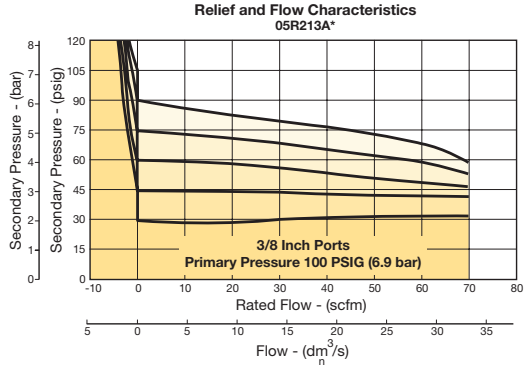

⚠ WARNING

Product rupture can cause serious injury.
Do not connect regulator to bottled gas.
Do not exceed Maximum primary pressure rating.

CAUTION:

REGULATOR PRESSURE ADJUSTMENT – The working range of knob adjustment is designed to permit outlet pressures within their full range. Pressure adjustment beyond this range is also possible because the knob is not a limiting device. This is a common characteristic of most industrial regulators, and limiting devices may be obtained only by special design. For best performance, regulated pressure should always be set by increasing the pressure up to the desired setting.

For inventory, lead times, and kit lookup, visit www.pdnplu.com

Parker Hannifin Corporation
Pneumatic Division
Richland, Michigan
www.parker.com/pneumatics

Tel: +45 63 12 83 00 | Email: ps@hymatik.com | www.hymatik.com | Hvidkaervej 27a, DK-5250 Odense SV, Denmark

06R Regulators – Compact

- Secondary aspiration plus balanced poppet provides quick response and accurate pressure regulation
- Rolling diaphragm for extended life
- Two high flow 1/4" gauge ports can be used as additional outlets
- Easily serviced
- Removable non-rising knob for panel mounting and tamper resistance
- 1/4", 3/8", 1/2" ports (NPT)



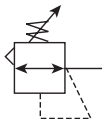

Operating information

Supply pressure (max):		250 psig (17.2 bar)
Secondary pressure ranges:		
Standard		2 to 125 psig (0 to 8.6 bar)
Low		1 to 60 psig (0 to 4.1 bar)
High		5 to 250 psig (0.4 to 17.2 bar)
Operating temperature:		32°F to 175°F (0°C to 80°C)
Low temperature		-4°F to 125°F (-20°C to 52°C)
Flow capacity†:		
High flow	1/4"	53 scfm (25 dm^3/s, ANR)
	3/8"	60 scfm (28.3 dm^3/s, ANR)
	1/2"	75 scfm (35.4 dm^3/s, ANR)
Gauge ports (2):		1/4 inch (can be used as additional full flow 1/4 inch outlet ports)
Weight:		1.6 lb (0.7 kg)

† scfm = Standard cubic feet per minute at 100 psig inlet, 90 psig no flow secondary setting and 10 psig pressure drop.

Ordering Information:

Port Size	Description	Part Number
1/4"	2-125 psi w/out Gauge, Relieving	**06R113AC**
1/4"	2-125 psi with Gauge, Relieving	**06R118AC**
3/8"	2-125 psi w/out Gauge, Relieving	**06R213AC**
3/8"	2-125 psi with Gauge, Relieving	**06R218AC**
1/2"	2-125 psi w/out Gauge, Relieving	**06R313AC**
1/2"	2-125 psi with Gauge, Relieving	**06R318AC**
1/4"	5-250 psi w/out Gauge, Relieving	**06R115AC**
3/8"	5-250 psi w/out Gauge, Relieving	**06R215AC**
1/2"	5-250 psi w/out Gauge, Relieving	**06R315AC**

NOTE: 2.0 Dia. (51 mm) hole required for panel mounting.

☐ Most popular.

For inventory, lead times, and kit lookup, visit www.pdnplu.com

Parker Hannifin Corporation
Pneumatic Division
Richland, Michigan
www.parker.com/pneumatics

Tel: +45 63 12 83 00 | Email: ps@hymatik.com | www.hymatik.com | Hvidkaervej 27a, DK-5250 Odense SV, Denmark

Material Specifications

Adjusting stem	Steel
Body	Zinc
Bonnet, piston stem, valve poppet & cap	Plastic
Collar, knob	Plastic
Diaphragm	Nitrile
Seals	Nitrile
Spring, poppet	Stainless
Spring, control	Steel

Repair and Service Kits

Bonnet assembly kit	**PS715P**
Control knob	**P04069B**
2" dial face 60 psig (0 to 4.1 bar), gauge	**K4520N14060**
2" dial face 160 psig (0 to 11.0 bar), gauge	**K4520N14160**
2" dial face 300 psig (0 to 20.7 bar), gauge	**K4520N14300**
1-3/4" digital round face 160 psig (0 to 11.0 bar) gauge	**K4517N14160D**
Mounting bracket kit (includes panel mount nut)	**PS707P**
Panel mount nut, plastic	**P04082**
Panel mount nut, metal	**P04079B**
Reverse flow service conversion kit, relieving	**PS708RP**
Relieving (includes poppet)	**PS708P**
Non-relieving (includes poppet)	**PS709P**
1-30 psig spring	**P01698**
1-60 psig spring	**P04062**
2-125 psig spring	**P04063**
5-250 psig spring	**P04064**
Tamperproof kit	**PS737P**

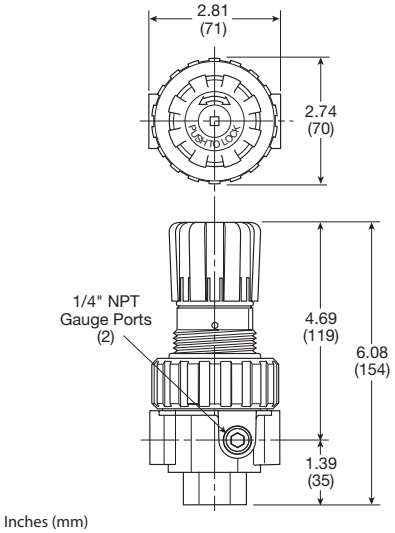

Inches (mm)

Flow Charts

06R 1/4" Regulator

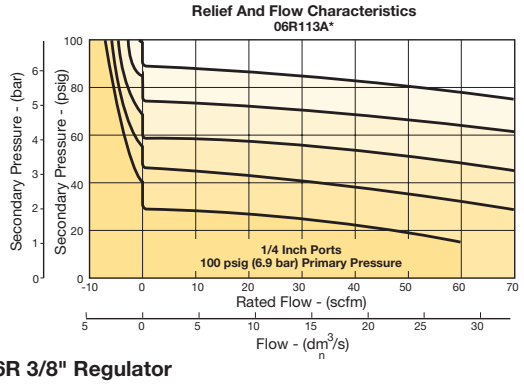

06R 3/8" Regulator

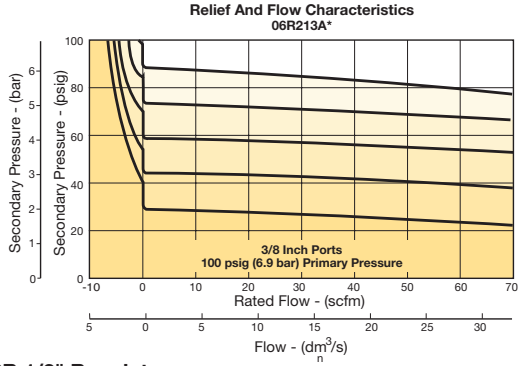

06R 1/2" Regulator

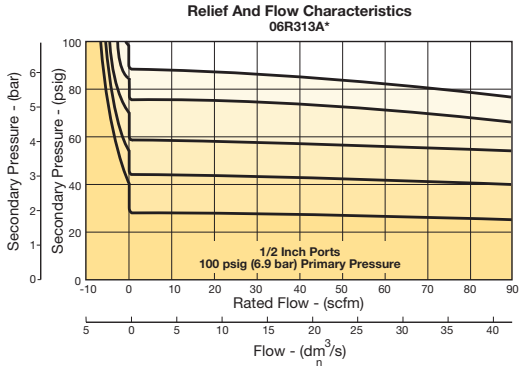

⚠ WARNING

Product rupture can cause serious injury.
Do not connect regulator to bottled gas.
Do not exceed Maximum primary pressure rating.

CAUTION:

REGULATOR PRESSURE ADJUSTMENT – The working range of knob adjustment is designed to permit outlet pressures within their full range. Pressure adjustment beyond this range is also possible because the knob is not a limiting device. This is a common characteristic of most industrial regulators, and limiting devices may be obtained only by special design. For best performance, regulated pressure should always be set by increasing the pressure up to the desired setting.

For inventory, lead times, and kit lookup, visit www.pdnplu.com

Parker Hannifin Corporation
Pneumatic Division
Richland, Michigan
www.parker.com/pneumatics

Tel: +45 63 12 83 00 | Email: ps@hymatik.com | www.hymatik.com | Hvidkaervej 27a, DK-5250 Odense SV, Denmark

07R Regulators – Standard

- Secondary aspiration plus balanced poppet provides quick response and accurate pressure regulation
- Rolling diaphragm for extended life
- Two high flow 1/4" gauge ports can be used as additional outlets
- Easily serviced
- Removable non-rising knob for panel mounting and tamper resistance
- 1/2", 3/4" ports (NPT)



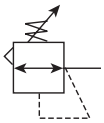

Operating information

Supply pressure (max):		250 psig (17.2 bar)
Secondary pressure ranges:		
Standard		2 to 125 psig (0 to 8.6 bar)
Low		1 to 60 psig (0 to 4.1 bar)
High		5 to 250 psig (0.4 to 17.2 bar)
Operating temperature:		32°F to 175°F (0°C to 80°C)
Low temperature		-4°F to 125°F (-20°C to 52°C)
Flow capacity†:		
High flow	1/2"	90 scfm (42.5 dm^3/s, ANR)
	3/4"	90 scfm (42.5 dm^3/s, ANR)
Gauge ports (2):		1/4 inch (can be used as additional full flow 1/4 inch outlet ports)
Weight:		2.5 lb (1.1 kg)

† scfm = Standard cubic feet per minute at 100 psig inlet, 90 psig no flow secondary setting and 10 psig pressure drop.

Ordering Information:

Port Size	Description	Part Number
1/2"	2-125 psi w/out Gauge, Relieving	**07R313AC**
1/2"	5-250 psi w/ out Gauge, Relieving	**07R315AC**
1/2"	2-125 psi w/ Gauge, Relieving	**07R318AC**
1/2"	5-250 psi with Gauge, Relieving	**07R321AC**
3/4"	2-125 psi w/out Gauge, Relieving	**07R413AC**
3/4"	5-250 psi w/out Gauge, Relieving	**07R415AC**
3/4"	2-125 psi w/ Gauge, Relieving	**07R418AC**
G1/2"	2-125 psi w/out Gauge, Relieving	**07R313AC1**
G3/4"	2-125 psi w/ Gauge, Relieving	**07R418AC1**

NOTE: 2.0 Dia. (51 mm) hole required for panel mounting.

☐ Most popular.

For inventory, lead times, and kit lookup, visit www.pdnplu.com

Parker Hannifin Corporation
Pneumatic Division
Richland, Michigan
www.parker.com/pneumatics

Tel: +45 63 12 83 00 | Email: ps@hymatik.com | www.hymatik.com | Hvidkaervej 27a, DK-5250 Odense SV, Denmark

Material Specifications

Adjusting stem	Steel
Body	Zinc
Bonnet, piston stem, valve poppet & cap	Plastic
Collar, knob	Plastic
Diaphragm	Nitrile
Seals	Nitrile
Spring, poppet	Stainless
Spring, control	Steel

Repair and Service Kits

Bonnet assembly kit	**PS715P**
Control knob	**P04069B**
2" dial face 60 psig (0 to 4.1 bar), gauge	**K4520N14060**
2" dial face 160 psig (0 to 11.0 bar), gauge	**K4520N14160**
2" dial face 300 psig (0 to 20.7 bar), gauge	**K4520N14300**
1-3/4" digital round face 160 psig (0 to 11.0 bar), gauge	**K4517N14160D**
Mounting bracket kit (includes panel mount nut)	**PS807P**
Panel mount nut, plastic	**P04082**
Panel Mount nut, metal	**P04079B**
Reverse flow service conversion kit, relieving	**PS808RP**
Relieving (includes poppet)	**PS808P**
Non-relieving (includes poppet)	**PS809P**
1-30 psig spring	**P01698**
1-60 psig spring	**P04062**
2-125 psig spring	**P04063**
5-250 psig spring	**P04064**
Tamperproof kit	**PS737P**

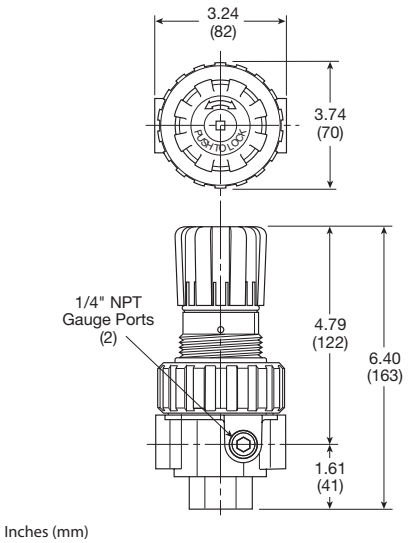

Inches (mm)

Flow Charts

07R 1/2" Regulator

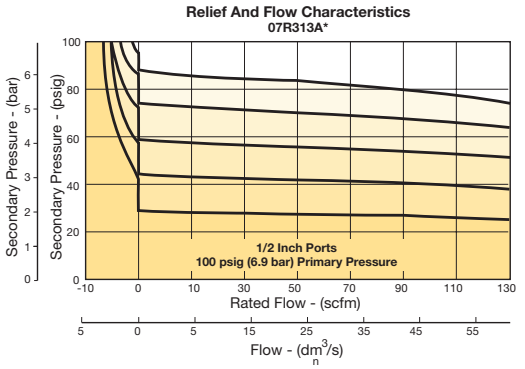

07R 3/4" Regulator

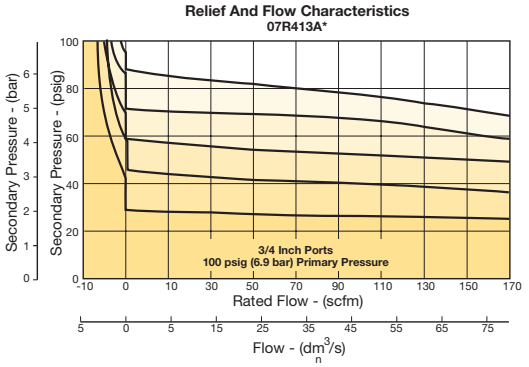

⚠ WARNING

Product rupture can cause serious injury.
Do not connect regulator to bottled gas.
Do not exceed Maximum primary pressure rating.

CAUTION:

REGULATOR PRESSURE ADJUSTMENT – The working range of knob adjustment is designed to permit outlet pressures within their full range. Pressure adjustment beyond this range is also possible because the knob is not a limiting device. This is a common characteristic of most industrial regulators, and limiting devices may be obtained only by special design. For best performance, regulated pressure should always be set by increasing the pressure up to the desired setting.

For inventory, lead times, and kit lookup, visit www.pdnplu.com

Parker Hannifin Corporation
Pneumatic Division
Richland, Michigan
www.parker.com/pneumatics

11R Pilot Controlled Regulator – Compact

- Balanced poppet provides quick response and accurate pressure regulation
- Pilot controlled regulators can be mounted “out of reach” with pilot regulator installed in a convenient location
- Solid control piston for extended life
- Two full flow 1/4" gauge ports can be used as additional outlets
- Pilot port 1/4 Inch
- 1/4", 3/8", 1/2" ports (NPT)



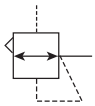

Operating information

Supply pressure (max):		0 to 250 psig (0 to 17.2 bar)
Operating temperature:		32°F to 175°F (0°C to 80°C)
Flow capacity†:		
High flow	1/4"	85 scfm (40 dm^3/s, ANR)
	3/8"	95 scfm (44.8 dm^3/s, ANR)
	1/2"	95 scfm (44.8 dm^3/s, ANR)
Gauge ports (2):		1/4 inch (can be used as additional full flow 1/4 inch outlet ports)
Weight:		1.3 lb (0.53 kg)

† scfm = Standard cubic feet per minute at 100 psig inlet, 90 psig no flow secondary setting and 10 psig pressure drop.

Ordering Information:

Port Size	Description	Part Number
1/4"	5-250 psi w/out Gauge, Relieving, Pilot Operated	**11R115PC**
3/8"	5-250 psi w/out Gauge, Relieving, Pilot Operated	**11R215PC**
1/2"	5-250 psi w/out Gauge, Relieving, Pilot Operated	**11R315PC**

NOTE: 2.0 Dia. (51 mm) hole required for panel mounting.

☐ Most popular.

For inventory, lead times, and kit lookup, visit www.pdnplu.com

Parker Hannifin Corporation
Pneumatic Division
Richland, Michigan
www.parker.com/pneumatics

Tel: +45 63 12 83 00 | Email: ps@hymatik.com | www.hymatik.com | Hvidkaervej 27a, DK-5250 Odense SV, Denmark

Material Specifications

Body & pilot cap	Zinc
Piston, valve poppet, & collar	Plastic
Seals	Nitrile
Springs	Steel

Repair and Service Kits

Seat Insert kit	**PS713P**
2" dial face 60 psig (0 to 4.1 bar), gauge	**K4520N14060**
2" dial face 160 psig (0 to 11.0 bar), gauge	**K4520N14160**
2" dial face 300 psig (0 to 20.7 bar), gauge	**K4520N14300**
1-3/4" digital round face 160 psig (0 to 11.0 bar), gauge	**K4517N14160D**
Mounting bracket kit (includes panel mount nut)	**PS707P**
Panel mount nut, plastic	**P04082**
Panel mount nut, metal	**P04079B**
Pilot conversion kit – relieving	**PS745P**
Non-Relieving	**PS747P**
Relieving	**PS749P**

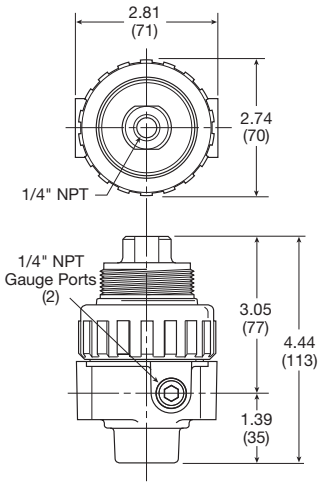

Inches (mm)

Flow Charts

11R 1/2" Regulator

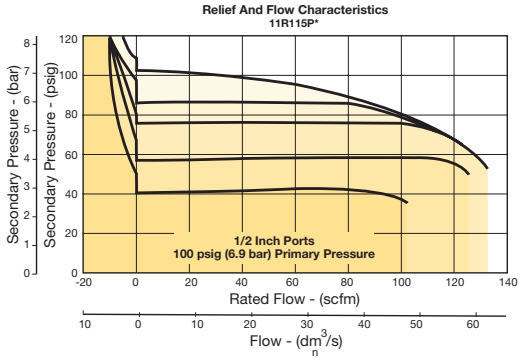

11R 3/8" Regulator

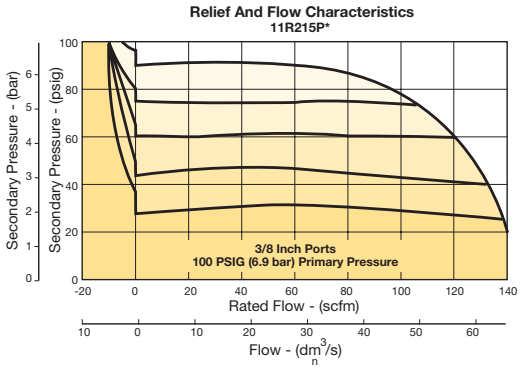

⚠ WARNING

Product rupture can cause serious injury.
Do not connect regulator to bottled gas.
Do not exceed Maximum primary pressure rating.

Parker Hannifin Corporation
Pneumatic Division
Richland, Michigan
www.parker.com/pneumatics

Tel: +45 63 12 83 00 | Email: ps@hymatik.com | www.hymatik.com | Hvidkaervej 27a, DK-5250 Odense SV, Denmark

12R Pilot Controlled Regulator – Standard

- Balanced poppet provides quick response and accurate pressure regulation
- Pilot controlled regulators can be mounted “out of reach” with pilot regulator installed in a convenient location
- Solid control piston for extended life
- Two full flow 1/4" gauge ports can be used as additional outlets
- Pilot port 1/4 Inch
- 1/2", 3/4" ports (NPT)



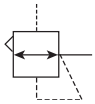

Operating information

Supply pressure (max):		0 to 250 psig (0 to 17.2 bar)
Operating temperature:		32°F to 175°F (0°C to 80°C)
Flow capacity†:		
High flow	1/2"	140 scfm (66 dm^3/s, ANR)
	3/4"	140 scfm (66 dm^3/s, ANR)
Gauge ports (2):		1/4 inch (can be used as additional full flow 1/4 inch outlet ports)
Weight:		2.0 lb (0.91 kg)

† scfm = Standard cubic feet per minute at 100 psig inlet, 90 psig no flow secondary setting and 10 psig pressure drop.

Ordering Information:

Port Size	Description	Part Number
1/2"	5-250 psi w/out Gauge, Relieving, Pilot Operated	**12R215PB**
3/4"	5-250 psi w/out Gauge, Relieving, Pilot Operated	**12R415PB**

NOTE: 2.0 Dia. (51 mm) hole required for panel mounting.

☐ Most popular.

For inventory, lead times, and kit lookup, visit www.pdnplu.com

Parker Hannifin Corporation
Pneumatic Division
Richland, Michigan
www.parker.com/pneumatics

Tel: +45 63 12 83 00 | Email: ps@hymatik.com | www.hymatik.com | Hvidkaervej 27a, DK-5250 Odense SV, Denmark

Material Specifications

Body & pilot cap	Zinc
Piston, valve poppet, & collar	Plastic
Seals	Nitrile
Springs	Steel

Repair and Service Kits

Seat insert kit	**PS813P**
2" dial face 60 psig (0 to 4.1 bar)	**K4520N14060**
2" dial face 160 psig (0 to 11.0 bar)	**K4520N14160**
2" dial face 300 psig (0 to 20.7 bar)	**K4520N14300**
1-3/4" digital round face 160 psig (0 to 11.0 bar)	**K4517N14160D**
Mounting bracket kit (includes panel mount nut)	**PS807P**
Panel mount nut, plastic	**P04082**
Panel mount nut, metal	**P04079B**
Pilot conversion kit – relieving	**PS745P**
Non-relieving	**PS847P**
Relieving	**PS849P**

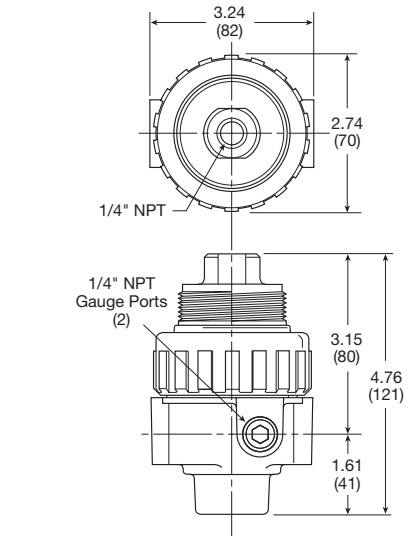

Inches (mm)

Flow Charts

12R 1/2 and 3/4" Regulator

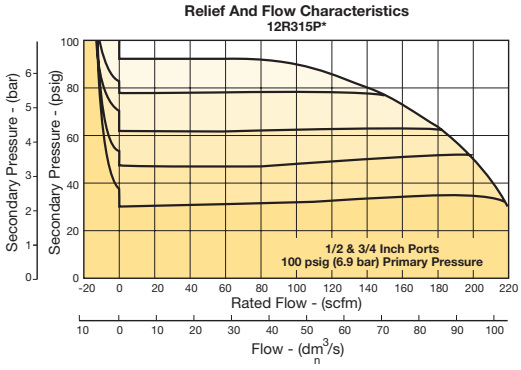

⚠ WARNING

Product rupture can cause serious injury.
Do not connect regulator to bottled gas.
Do not exceed Maximum primary pressure rating.

For inventory, lead times, and kit lookup, visit www.pdnplu.com

Parker Hannifin Corporation
Pneumatic Division
Richland, Michigan
www.parker.com/pneumatics

Tel: +45 63 12 83 00 | Email: ps@hymatik.com | www.hymatik.com | Hvidkaervej 27a, DK-5250 Odense SV, Denmark

05E Filter / Regulator – Economy

- Space saving package offers both filter and regulator features for optimal performance
- Excellent water removal efficiency
- Rolling diaphragm for extended life
- Removable non-rising knob for tamper resistance
- Quick response, and accurate pressure regulation regardless of changing flow or inlet pressure
- 40 micron filter element standard
- 1/4", 3/8" ports (NPT)



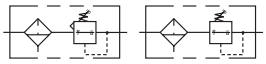

Operating information

Supply pressure (max):		
Plastic bowl		0 to 150 psig (0 to 10.3 bar)
Operating temperature:		
Plastic bowl		32°F to 125°F (0°C to 52°C)
Flow capacity†:		
High flow	1/4"	30 scfm (14.2 dm^3/s, ANR)
	3/8"	40 scfm (18.9 dm^3/s, ANR)
Bowl capacity:		2 oz.
Auto pulse drain tube barb		1/8 inch
Gauge ports (2):		1/4 inch
Sump capacity:		0.9 oz.
Weight:		1.35 lb (0.6 kg)

† scfm = Standard cubic feet per minute at 100 psig inlet, 90 psig no flow secondary setting and 10 psig pressure drop.

Ordering Information:

Port Size	Description ‡	Part Number
1/4"	Poly Bowl, Metal Guard, Twist Drain, 40 Micron, 2-125 psi w/out Gauge, Relieving	**05E12A13AB**
3/8"	Poly Bowl, Metal Guard, Twist Drain, 40 Micron, 2-125 psi w/out Gauge, Relieving	**05E22A13AB**

‡ For polycarbonate bowl, see caution in Engineering Section A.

NOTE: 1.53 Dia. (39 mm) hole required for panel mounting.

☐ Most popular.

For inventory, lead times, and kit lookup, visit www.pdnplu.com

Parker Hannifin Corporation
Pneumatic Division
Richland, Michigan
www.parker.com/pneumatics

Tel: +45 63 12 83 00 | Email: ps@hymatik.com | www.hymatik.com | Hvidkaervej 27a, DK-5250 Odense SV, Denmark

Material Specifications

Adjusting stem	Steel
Body	Zinc
Bonnet, internal parts	Plastic
Transparent bowl	Polycarbonate
Bowl guard	Steel
Collar	Plastic
Diaphragm	Nitrile
Drain	Plastic
40 micron element (standard)	Plastic
5 micron element (optional)	Plastic
Adsorber element (optional)	Activated charcoal
Knob	Plastic
Seals	Nitrile
Sight gauge	Polyamide (nylon)
Springs, poppet & control	Steel

Repair and Service Kits

Bowl guard kit	**PS905P**
Poly bowl, automatic pulse drain	**PS995P**
Poly bowl, twist drain	**PS932P**
Auto pulse drain	**PS998P**
Twist drain	**PS512P**
40 micron element	**PS901P**
5 micron element	**PS902P**
Adsorber element	**PS931P**
Sight gauge kit	**PS914P**
1-1/2" dial face 30 psig (0 to 2.1 bar), gauge	**K4515N14030**
1-1/2" dial face 60 psig (0 to 4.1 bar), gauge	**K4515N14060**
1-1/2" dial face 160 psig (0 to 11.0 bar), gauge	**K4515N14160**
1-1/2" dial face 300 psig (0 to 20.7 bar), gauge	**K4515N14300**
2" dial face 60 psig (0 to 4.1 bar), gauge	**K4520N14060**
2" dial face 160 psig (0 to 11.0 bar), gauge	**K4520N14160**
2" dial face 300 psig (0 to 20.7 bar), gauge	**K4520N14300**
Mounting bracket kit (includes panel mount nut)	**PS963P**
Panel mount nut – metal	**PS964P**
1-30 psig spring	**P04427**
1-60 psig spring	**P04426**
2-125 psig spring	**P04425**
2-200 psig spring	**P02934**
Relieving service kit	**PS908P**
Bonnet assembly kit	**PS915P**

⚠ WARNING

Product rupture can cause serious injury.
Do not connect regulator to bottled gas.
Do not exceed Maximum primary pressure rating.

CAUTION:

REGULATOR PRESSURE ADJUSTMENT – The working range of knob adjustment is designed to permit outlet pressures within their full range. Pressure adjustment beyond this range is also possible because the knob is not a limiting device. This is a common characteristic of most industrial regulators, and limiting devices may be obtained only by special design. For best performance, regulated pressure should always be set by increasing the pressure up to the desired setting.

Flow Charts

05E 1/4" Filter / Regulator

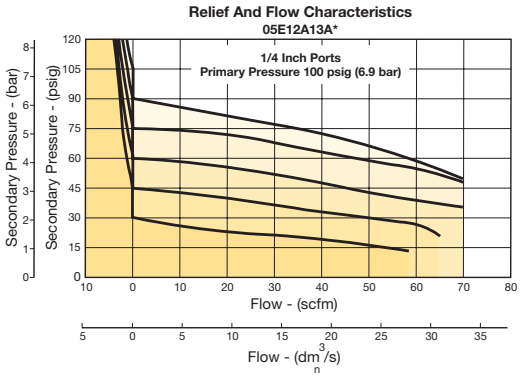

05E 3/8" Filter / Regulator

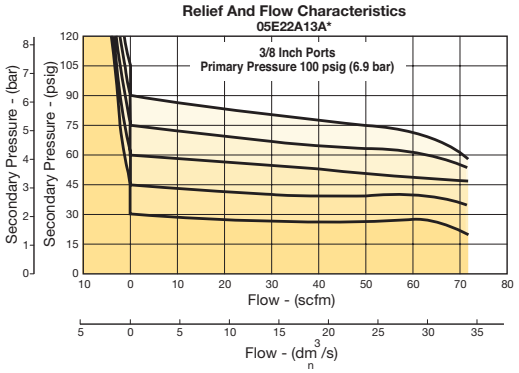

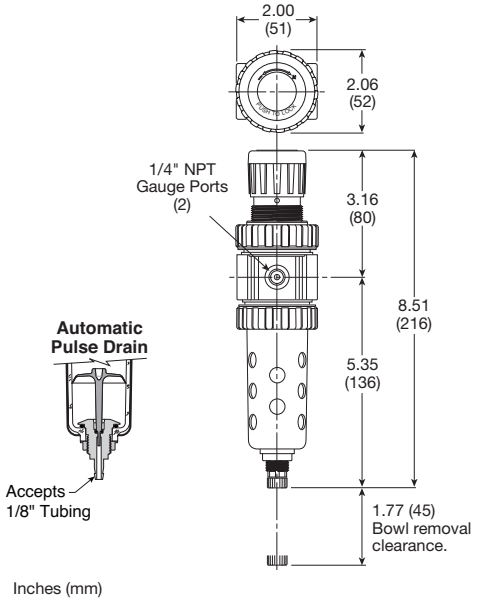

For inventory, lead times, and kit lookup, visit www.pdnplu.com

Parker Hannifin Corporation
Pneumatic Division
Richland, Michigan
www.parker.com/pneumatics

Tel: +45 63 12 83 00 | Email: ps@hymatik.com | www.hymatik.com | Hvidkaervej 27a, DK-5250 Odense SV, Denmark

06E Filter / Regulator – Compact

- Space saving package offers both filter and regulator features for optimal performance
- Excellent water removal efficiency
- Rolling diaphragm for extended life
- Quick response, and accurate pressure regulation regardless of changing flow or inlet pressure
- Two high flow 1/4" gauge ports can be used as additional outlets
- Shown with recommended metal bowl guard
- 1/4", 3/8", 1/2" ports (NPT)



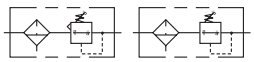

Operating information

Supply pressure (max):		
Plastic bowl		0 to 150 psig (0 to 10.3 bar)
Metal bowl		0 to 250 psig (0 to 17.2 bar)
Auto float drain		15 to 250 psig (1.0 to 17.2 bar)
Operating temperature:		
Plastic bowl		32°F to 125°F (0°C to 52°C)
Metal bowl		32°F to 175°F (0°C to 80°C)
Secondary pressure range:		
Standard		2 to 125 psig (0 to 8.6 bar)
Low		1 to 60 psig (0 to 4.1 bar)
High		5 to 250 psig (0.4 to 17.2 bar)
Flow capacity†:		
High flow	1/4"	45 scfm (21.7 dm^3/s, ANR)
	3/8"	55 scfm (26 dm^3/s, ANR)
	1/2"	61 scfm (28.8 dm^3/s, ANR)
Bowl capacity:		4.4 oz.
Gauge ports (2):		1/4 inch (can be used as additional full flow 1/4" outlet ports)
Sump capacity:		1.75 oz.
Weight:		1.6 lb (0.7 kg)

† scfm = Standard cubic feet per minute at 100 psig inlet, 90 psig no flow secondary setting and 10 psig pressure drop.

Ordering Information:

Port Size	Description ‡	Part Number
1/4"	Poly Bowl, Metal Guard, Twist Drain, 40 micron, 2-125 psi w/out Gauge, Relieving	**06E12A13AC**
1/4"	Poly Bowl, Metal Guard, Twist Drain, 40 micron, 2-125 psi w/ Gauge, Relieving	**06E12A18AC**
1/4"	Poly Bowl, Metal Guard, Twist Drain, 5 micron, 2-125 psi w/ Gauge, Relieving	**06E12B18AC**
1/4"	Metal Bowl, Twist Drain, 40 micron, 2-125 psi w/out Gauge, Relieving	**06E13A13AC**
1/4"	Metal Bowl, Twist Drain, 40 micron, 2-125 psi w/out Gauge, T-Handle Relieving	**06E13A13TC**
1/4"	Metal Bowl, Twist Drain, 40 micron, 2-125 psi w/ Gauge, Relieving	**06E13A18AC**
1/4"	Metal Bowl, Sight Gauge, Twist Drain, 40 micron, 2-125 psi w/out Gauge, Relieving	**06E14A13AC**
1/4"	Metal Bowl, Sight Gauge, Twist Drain, 40 micron, 2-125 psi w/ Gauge, Relieving	**06E14A18AC**
1/4"	Poly Bowl, Metal Guard, Auto Float Drain, 40 micron, 2-125 psi w/out Gauge, Relieving	**06E16A13AC**
1/4"	Poly Bowl, Metal Guard, Auto Float Drain, 40 micron, 2-125 psi w/ Gauge, Relieving	**06E16A18AC**
3/8"	Poly Bowl, Metal Guard, Twist Drain, 40 micron, 2-125 psi w/out Gauge, Relieving	**06E22A13AC**
3/8"	Poly Bowl, Metal Guard, Twist Drain, 40 micron, 2-125 psi w/ Gauge, Relieving	**06E22A18AC**
3/8"	Poly Bowl, Metal Guard, Twist Drain, 5 micron, 2-125 psi w/out Gauge, Relieving	**06E22B13AC**

Continued on next page

Most popular.

For inventory, lead times, and kit lookup, visit www.pdnplu.com

Parker Hannifin Corporation
Pneumatic Division
Richland, Michigan
www.parker.com/pneumatics

Tel: +45 63 12 83 00 | Email: ps@hymatik.com | www.hymatik.com | Hvidkaervej 27a, DK-5250 Odense SV, Denmark

Ordering Information cont.:

Port Size	Description ‡	Part Number
3/8"	Metal Bowl, Twist Drain, 40 micron, 2-125 psi w/ Gauge, Relieving	**06E23A18AC**
3/8"	Metal Bowl, Sight Gauge, Twist Drain, 40 micron, 2-125 psi w/out Gauge, Relieving	**06E24A13AC**
3/8"	Metal Bowl, Sight Gauge, Twist Drain, 40 micron, 2-125 psi w/ Gauge, Relieving	**06E24A18AC**
3/8"	Poly Bowl, Metal Guard, Auto Float Drain, 40 micron, 2-125 psi w/out Gauge, Relieving	**06E26A13AC**
3/8"	Poly Bowl, Metal Guard, Auto Float Drain, 40 micron, 2-125 psi w/ Gauge, Relieving	**06E26A18AC**
3/8"	Metal Bowl, Sight Gauge, Auto Float Drain, 40 micron, 2-125 psi w/out Gauge, Relieving	**06E28A13AC**
1/2"	Poly Bowl, Metal Guard, Twist Drain, 40 micron, 2-125 psi w/out Gauge, Relieving	**06E32A13AC**
1/2"	Poly Bowl, Metal Guard, Twist Drain, 40 micron, 2-125 psi w/ Gauge, Relieving	**06E32A18AC**
1/2"	Poly Bowl, Metal Guard, Twist Drain, 5 micron, 2-125 psi w/out Gauge, Relieving	**06E32B13AC**
1/2"	Poly Bowl, Metal Guard, Twist Drain, 5 micron, 2-125 psi w/ Gauge, Relieving	**06E32B18AC**
1/2"	Metal Bowl, Sight Gauge, Twist Drain, 40 micron, 2-125 psi w/out Gauge, Relieving	**06E34A13AC**
1/2"	Metal Bowl, Sight Gauge, Twist Drain, 40 micron, 2-125 psi w/ Gauge, Relieving	**06E34A18AC**
1/2"	Metal Bowl, Sight Gauge, Twist Drain, 5 micron, 2-125 psi w/ Gauge, Relieving	**06E34B18AC**
1/2"	Poly Bowl, Metal Guard, Auto Float Drain, 40 micron, 2-125 psi w/out Gauge, Relieving	**06E36A13AC**
1/2"	Poly Bowl, Metal Guard, Auto Float Drain, 40 micron, 2-125 psi w/ Gauge, Relieving	**06E36A18AC**
1/2"	Poly Bowl, Metal Guard, Auto Float Drain, 5 micron, 2-125 psi w/out Gauge, Relieving	**06E36B13AC**
1/2"	Metal Bowl, Auto Float Drain, 40 micron, 2-125 psi w/ Gauge, Relieving	**06E37A18AC**
1/2"	Metal Bowl, Sight Gauge, Auto Float Drain, 40 micron, 2-125 psi w/out Gauge, Relieving	**06E38A13AC**
1/2"	Metal Bowl, Sight Gauge, Auto Float Drain, 40 micron, 2-125 psi w/ Gauge, Relieving	**06E38A18AC**
G1/4"	Metal Bowl, Auto Float Drain, 5 micron, 2-125 psi w/out Gauge, Relieving	**06E17B13AC1**

‡ For polycarbonate bowl, see caution in Engineering Section A.

NOTE: 2.0 Dia. (50.8 mm) hole required for panel mounting. Max panel thickness 1/4"

Most popular.

For inventory, lead times, and kit lookup, visit www.pdnplu.com

Parker Hannifin Corporation
Pneumatic Division
Richland, Michigan
www.parker.com/pneumatics

Tel: +45 63 12 83 00 | Email: ps@hymatik.com | www.hymatik.com | Hvidkaervej 27a, DK-5250 Odense SV, Denmark

Material Specifications

Adjusting stem	Steel
Body	Zinc
Bonnet, internal parts	Plastic
Transparent bowl	Polycarbonate
Metal bowl (with or without sight gauge)	Zinc
Bowl guard	Steel
Collar	Plastic
Diaphragm	Nitrile
Manual twist drain, standard, body & nut	Plastic
Auto float drain, housing, float	Plastic
Auto float drain, seals	Nitrile
Auto float drain, springs, push rod	Stainless steel
Knob	Plastic
40 micron element (standard)	Plastic
5 micron element (optional)	Plastic
Adsorber element (optional)	Activated charcoal
Seals	Nitrile
Sight gauge	Polyamide
Poppet, spring	Stainless
Control, spring	Steel

Repair and Service Kits

Bonnet assembly kit	**PS715P**
Bowl guard kit	**PS705P**
Poly bowl, auto float drain	**PS722P**
Poly bowl, twist drain	**PS732P**
Metal bowl, auto float drain	**PS726P**
Metal bowl, twist drain	**PS734P**
Metal bowl, sight gauge / auto drain	**PS723P**
Metal bowl, sight gauge / twist drain	**PS735P**
Control knob	**P04069B**
Auto float drain	**PS506P**
Twist drain	**PS512P**
40 micron element	**PS701P**
5 micron element	**PS702P**
Adsorber element	**PS731P**
2" dial face 60 psig (0 to 4.1 bar), gauge	**K4520N14060**
2" dial face 160 psig (0 to 11.0 bar), gauge	**K4520N14160**
2" dial face 300 psig (0 to 20.7 bar), gauge	**K4520N14300**
1-3/4" digital round face 160 psig (0 to 11.0 bar), gauge	**K4517N14160D**
Mounting bracket kit (includes panel mount nut)	**PS707P**
Panel mount nut	**P04082**
Non-relieving (includes poppet)	**PS711P**
Relieving (includes poppet)	**PS710P**
Seat insert kit	**PS713P**
1- 30 psig spring	**P01698**
1- 60 psig spring	**P04062**
2- 125 psig spring	**P04063**
5- 250 psig spring	**P04064**
Tamperproof kit (key lock)	**PS737P**

⚠ WARNING

Product rupture can cause serious injury.
Do not connect regulator to bottled gas.
Do not exceed Maximum primary pressure rating.

Flow Charts

06E 1/4" Filter / Regulator

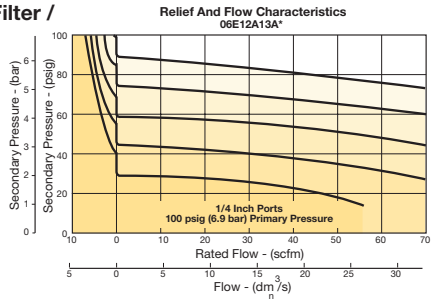

06E 3/8" Filter / Regulator

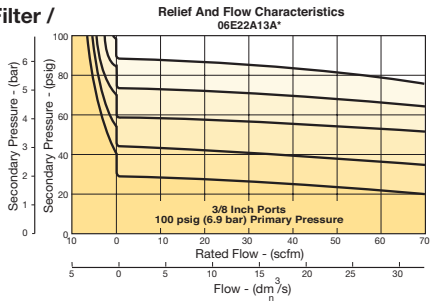

06E 1/2" Filter / Regulator

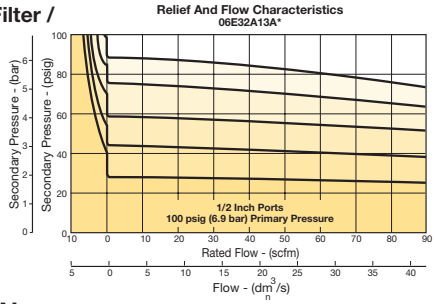

CAUTION:

REGULATOR PRESSURE ADJUSTMENT – The working range of knob adjustment is designed to permit outlet pressures within their full range. Pressure adjustment beyond this range is also possible because the knob is not a limiting device. This is a common characteristic of most industrial regulators, and limiting devices may be obtained only by special design. For best performance, regulated pressure should always be set by increasing the pressure up to the desired setting.

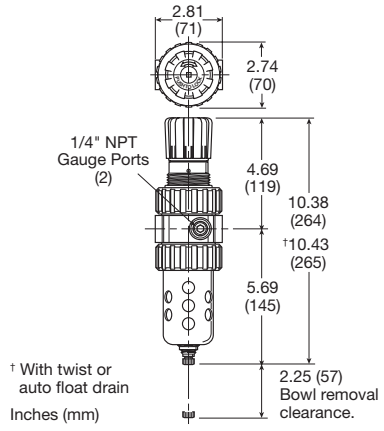

For inventory, lead times, and kit lookup, visit www.pdnplu.com

Parker Hannifin Corporation
Pneumatic Division
Richland, Michigan
www.parker.com/pneumatics

Tel: +45 63 12 83 00 | Email: ps@hymatik.com | www.hymatik.com | Hvidkaervej 27a, DK-5250 Odense SV, Denmark

07E Filter / Regulator – Standard

- Space saving package offers both filter and regulator features for optimal performance
- Excellent water removal efficiency
- Rolling diaphragm for extended life
- Quick response, and accurate pressure regulation regardless of changing flow or inlet pressure
- Two high flow 1/4" gauge ports can be used as additional outlets
- Shown with recommended metal bowl guard
- 1/2", 3/4" ports (NPT)



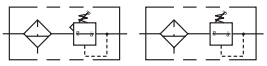

Operating information

Supply pressure (max):		
Plastic bowl		0 to 150 psig (0 to 10.3 bar)
Metal bowl		0 to 250 psig (0 to 17.2 bar)
Auto float drain		15 to 250 psig (1.0 to 17.2 bar)
Operating temperature:		
Plastic bowl		32°F to 125°F (0°C to 52°C)
Metal bowl		32°F to 175°F (0°C to 80°C)
Secondary pressure range:		
Standard		2 to 125 psig (0 to 8.6 bar)
Low		1 to 60 psig (0 to 4.1 bar)
High		5 to 250 psig (0.4 to 17.2 bar)
Flow capacity†:		
High flow	1/2"	90 scfm (42.5 dm^3/s, ANR)
	3/4"	90 scfm (42.5 dm^3/s, ANR)
Bowl capacity:		7.2 oz.
Gauge ports (2):		1/4 inch (can be used as additional full flow 1/4" outlet ports)
Sump capacity:		2.8 oz.
Weight:		2.5 lb (1.1 kg)

† scfm = Standard cubic feet per minute at 100 psig inlet, 90 psig no flow secondary setting and 10 psig pressure drop.

Ordering Information:

Port Size	Description ‡	Part Number
1/2"	Poly Bowl, Metal Guard, Twist Drain, 40 micron, 2-125 psi w/out Gauge, Relieving	**07E32A13AC**
1/2"	Poly Bowl, Metal Guard, Twist Drain, 40 micron, 2-125 psi w/ Gauge, Relieving	**07E32A18AC**
1/2"	Poly Bowl, Metal Guard, Twist Drain, 5 micron, 2-125 psi w/ out Gauge, Relieving	**07E32B13AC**
1/2"	Poly Bowl, Metal Guard, Twist Drain, 5 micron, 2-125 psi w/ Gauge, Relieving	**07E32B18AC**
1/2"	Metal Bowl, Sight Gauge, Twist Drain, 40 micron, 2-125 psi w/out Gauge, Relieving	**07E34A13AC**
1/2"	Metal Bowl, Sight Gauge, Twist Drain, 40 micron, 5-250 psi w/out Gauge, Relieving	**07E34A15AC**
1/2"	Metal Bowl, Sight Gauge, Twist Drain, 40 micron, 2-125 psi w/ Gauge, Relieving	**07E34A18AC**
1/2"	Metal Bowl, Sight Gauge, Twist Drain, 5 micron, 2-125 psi w/out Gauge, Relieving	**07E34B13AC**
1/2"	Metal Bowl, Sight Gauge, Twist Drain, 5 micron, 2-125 psi w/ Gauge, Relieving	**07E34B18AC**
1/2"	Poly Bowl, Metal Guard, Auto Float Drain, 40 micron, 2-125 psi w/ out Gauge, Relieving	**07E36A13AC**
1/2"	Poly Bowl, Metal Guard, Auto Float Drain, 40 micron, 2-125 psi w/ Gauge, Relieving	**07E36A18AC**
1/2"	Poly Bowl, Metal Guard, Auto Float Drain, 5 micron, 2-125 psi w/ out Gauge, Relieving	**07E36B13AC**
1/2"	Poly Bowl, Metal Guard, Auto Float Drain, 5 micron, 2-125 psi w/ Gauge, Relieving	**07E36B18AC**
1/2"	Metal Bowl, Auto Float Drain, 40 micron, 2-125 psi w/out Gauge, Relieving	**07E37A13AC**

Continued on next page

Most popular.

Tel: +45 63 12 83 00 | Email: ps@hymatik.com | www.hymatik.com | Hvidkaervej 27a, DK-5250 Odense SV, Denmark

Ordering Information cont.:

Port Size	Description ‡	Part Number
1/2"	Metal Bowl, Auto Float Drain, 5 micron, 2-125 psi w/out Gauge, Relieving	**07E37B13AC**
1/2"	Metal Bowl, Sight Gauge, Auto Float Drain, 40 micron, 2-125 psi w/ out Gauge, Relieving	**07E38A13AC**
1/2"	Metal Bowl, Sight Gauge, Auto Float Drain, 40 micron, 2-125 psi w/ Gauge, Relieving	**07E38A18AC**
1/2"	Metal Bowl, Sight Gauge, Auto Float Drain, 40 micron, 5-250 psi w/ Gauge, Relieving	**07E38A21AC**
1/2"	Metal Bowl, Sight Gauge, Auto Float Drain, 5 micron, 2-125 psi w/ Gauge, Relieving	**07E38B18AC**
3/4"	Poly Bowl, Metal Guard, Twist Drain, 40 micron, 2-125 psi w/ out Gauge, Relieving	**07E42A13AC**
3/4"	Poly Bowl, Metal Guard, Twist Drain, 40 micron, 2-125 psi w/ Gauge, Relieving	**07E42A18AC**
3/4"	Poly Bowl, Metal Guard, Twist Drain, 5 micron, 2-125 psi w/out Gauge, Relieving	**07E42B13AC**
3/4"	Metal Bowl, Twist Drain, 40 micron, 2-125 psi w/ out Gauge, Relieving	**07E43A13AC**
3/4"	Metal Bowl, Sight Gauge, Twist Drain, 40 micron, 2-125 psi w/ out Gauge, Relieving	**07E44A13AC**
3/4"	Metal Bowl, Sight Gauge, Twist Drain, 40 micron, 2-125 psi w/ Gauge, Relieving	**07E44A18AC**
3/4"	Metal Bowl, Sight Gauge, Twist Drain, 5 micron, 5-250 psi w/ out Gauge, Relieving	**07E44B15AC**
3/4"	Metal Bowl, Sight Gauge, Twist Drain, 5 micron, 2-125 psi w/ Gauge, Relieving	**07E44B18AC**
3/4"	Metal Bowl, Sight Gauge, Twist Drain, 5 micron, 2-125 psi w/ Gauge, Relieving	**07E44B21AC**
3/4"	Poly Bowl, Metal Guard, Auto Float Drain, 40 micron, 2-125 psi w/ out Gauge, Relieving	**07E46A13AC**
3/4"	Poly Bowl, Metal Guard, Auto Float Drain, 40 micron, 2-125 psi w/ Gauge, Relieving	**07E46A18AC**
3/4"	Metal Bowl, Auto Float Drain, 40 micron, 2-125 psi w/out Gauge, Relieving	**07E47A13AC**
3/4"	Metal Bowl, Sight Gauge, Auto Float Drain, 40 micron, 2-125 psi w/ out Gauge, Relieving	**07E48A13AC**

‡ For polycarbonate bowl, see caution in Engineering Section A.

NOTE: 2.0 Dia. (50.8 mm) hole required for panel mounting. Max panel thickness 1/4".

Most popular.

For inventory, lead times, and kit lookup, visit www.pdnplu.com

Parker Hannifin Corporation
Pneumatic Division
Richland, Michigan
www.parker.com/pneumatics

Tel: +45 63 12 83 00 | Email: ps@hymatik.com | www.hymatik.com | Hvidkaervej 27a, DK-5250 Odense SV, Denmark

Material Specifications

Adjusting stem	Steel
Body	Zinc
Bonnet, internal parts	Plastic
Transparent bowl	Polycarbonate
Metal bowl (with or without sight gauge)	Zinc
Bowl guard	Steel
Collar	Plastic or metal
Diaphragm	Nitrile
Manual twist drain, standard, body & nut	Plastic
Auto float drain, housing, float	Plastic
Auto float drain, seals	Nitrile
Auto float drain, springs, push rod	Stainless steel
Knob	Plastic
40 micron element (standard)	Plastic
5 micron element (optional)	Plastic
Adsorber element (optional)	Activated charcoal
Seals	Nitrile
Sight gauge	Polyamide
Poppet, spring	Stainless
Control, spring	Steel

Repair and Service Kits

Bonnet assembly kit	**PS715P**
Bowl guard kit	**PS805P**
Poly bowl, auto float drain	**PS822P**
Poly bowl, twist drain	**PS832P**
Metal bowl, automatic float drain	**PS826P**
Metal bowl, twist drain	**PS834P**
Metal bowl, sight gauge / auto drain	**PS823P**
Metal bowl, sight gauge / twist drain	**PS835P**
Control knob	**P04069B**
Auto float drain	**PS506P**
Twist drain	**PS512P**
40 micron element	**PS801P**
5 micron element	**PS802P**
Adsorber element	**PS831P**
2" dial face 60 psig (0 to 4.1 bar), gauge	**K4520N14060**
2" dial face 160 psig (0 to 11.0 bar), gauge	**K4520N14160**
2" dial face 300 psig (0 to 20.7 bar), gauge	**K4520N14300**
1-3/4" Digital Round Face 160 psig (0 to 11.0 bar)	**K4517N14160D**
Mounting bracket kit (includes panel mount nut)	**PS807P**
Panel mount nut	**P04082**
Non-relieving (includes poppet)	**PS811P**
Relieving (includes poppet)	**PS810P**
Seat insert kit	**PS813P**
1- 30 psig spring	**P01698**
1- 60 psig spring	**P04062**
2- 125 psig spring	**P04063**
5- 250 psig spring	**P04064**
Tamperproof kit (key lock)	**PS737P**

Flow Charts

07E 1/2" Filter / Regulator

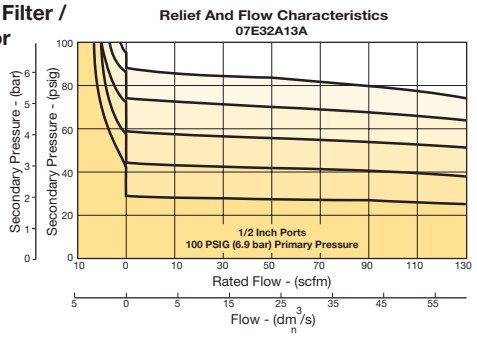

07E 3/4" Filter / Regulator

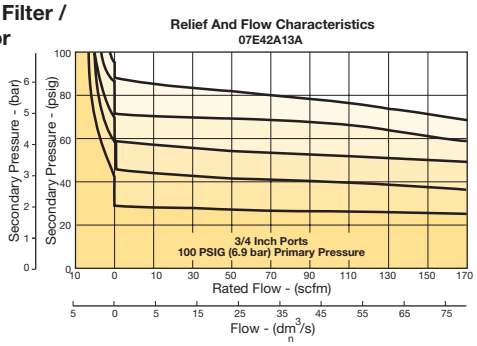

⚠ WARNING

Product rupture can cause serious injury.
Do not connect regulator to bottled gas.
Do not exceed Maximum primary pressure rating.

CAUTION:

REGULATOR PRESSURE ADJUSTMENT – The working range of knob adjustment is designed to permit outlet pressures within their full range. Pressure adjustment beyond this range is also possible because the knob is not a limiting device. This is a common characteristic of most industrial regulators, and limiting devices may be obtained only by special design. For best performance, regulated pressure should always be set by increasing the pressure up to the desired setting.

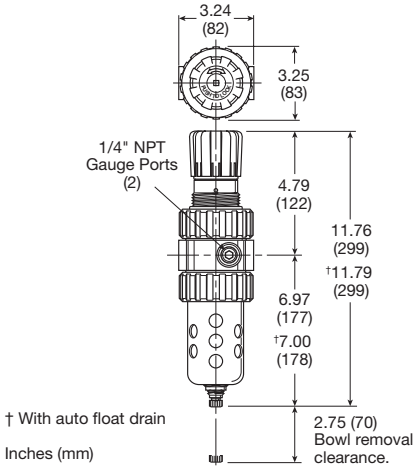

For inventory, lead times, and kit lookup, visit www.pdnplu.com

Parker Hannifin Corporation
Pneumatic Division
Richland, Michigan
www.parker.com/pneumatics

12E Filter / Regulator – Coalescing

- Space saving package offers both coalescer and regulator features for optimal performance
- Removes liquid, aerosol and sub-micron particles
- Rolling diaphragm for extended life
- Removable non-rising knob for panel mounting and tamper resistance
- Quick response, and accurate pressure regulation regardless of changing flow or inlet pressure
- Two high flow 1/4" gauge ports can be used as additional outlets
- 1/2", 3/4" ports (NPT)



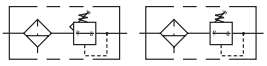

Operating information

Supply pressure (max):		
Metal bowl		0 to 250 psig (0 to 17.2 bar)
Operating temperature:		
Metal bowl		32°F to 175°F (0°C to 80°C)
Secondary pressure range:		
Standard		2 to 125 psig (0 to 8.6 bar)
Low		1 to 60 psig (0 to 4.1 bar)
High		5 to 250 psig (0.4 to 17.2 bar)
Flow capacity†:		
High flow	1/2"	40 scfm (18.9 dm^3/s, ANR)
	3/4"	45 scfm (21.2 dm^3/s, ANR)
Bowl capacity:		7.2 oz.
Gauge ports (2):		1/4 inch (can be used as additional full flow 1/4" outlet ports)
Sump capacity:		2.8 oz.
Weight:		2.5 lb (1.1 kg)

† scfm = Standard cubic feet per minute at 150 psig inlet, 90 psig no flow secondary setting and 10 psig pressure drop.

Ordering Information:

Port Size	Description ‡	Part Number
1/2"	Metal Bowl, Twist Drain, Grade 6 (0.01), 2-125 psi w/out Gauge, Relieving	**12E33E13AA**
1/2"	Metal Bowl, Twist Drain, Grade 6 (0.01), 2-125 psi w/ Gauge, Relieving	**12E33E18AA**
1/2"	Metal Bowl, Auto Float Drain, Grade 6 (0.01), 2-125 psi w/ out Gauge, Relieving	**12E37E13AA**
1/2"	Metal Bowl, Auto Float Drain, Grade 6 (0.01), 2-125 psi w/ Gauge, Relieving	**12E37E18AA**
3/4"	Metal Bowl, Twist Drain, Grade 6 (0.01), 2-125 psi w/ Gauge, Relieving	**12E43E18AA**

‡ For polycarbonate bowl, see caution in Engineering Section A.

NOTE: 2.0 Dia. (50.8 mm) hole required for panel mounting. Max panel thickness 1/4"

☐ Most popular.

For inventory, lead times, and kit lookup, visit www.pdnplu.com

Parker Hannifin Corporation
Pneumatic Division
Richland, Michigan
www.parker.com/pneumatics

Tel: +45 63 12 83 00 | Email: ps@hymatik.com | www.hymatik.com | Hvidkaervej 27a, DK-5250 Odense SV, Denmark

Material Specifications

Adjusting stem	Steel
Body	Zinc
Bonnet, internal parts	Plastic
Metal bowl (without sight gauge)	Zinc
Collar for bonnet	Metal
Control spring	Steel
Diaphragm	Nitrile
Manual twist drain, standard, body & nut	Plastic
Auto float drain, housing, float	Plastic
Auto float drain, seals	Nitrile
Auto float drain, springs, push rod	Stainless steel
Knob	Plastic
Element	Borosilicate & felt glass fibers
Seals	Nitrile
Sight gauge	Polyamide
Poppet, spring	Stainless

Repair and Service Kits

Bonnet assembly kit	**PS715P**
Metal bowl, auto float drain	**PS826P**
Metal bowl, twist drain	**PS834P**
Control knob	**P04069B**
Auto float drain	**PS506P**
Twist drain	**PS512P**
Grade 6 element (0.01 micron)	**PS884P**
Grade 10 element (1.0 micron)	**PS885P**
2" dial face 60 psig (0 to 4.1 bar), gauge	**K4520N14060**
2" dial face 160 psig (0 to 11.0 bar), gauge	**K4520N14160**
2" dial face 300 psig (0 to 20.7 bar), gauge	**K4520N14300**
1-3/4" digital round face 160 psig (0 to 11.0 bar), gauge	**K4517N14160D**
Mounting bracket kit (includes panel mount nut)	**PS807P**
Relieving (includes poppet)	**PS886P**
1- 30 psig spring	**P01698**
1- 60 psig spring	**P04062**
2- 125 psig spring	**P04063**
5- 250 psig spring	**P04064**
Tamperproof kit (key lock)	**PS737P**

Flow Charts

12E 1/2" Filter / Regulator

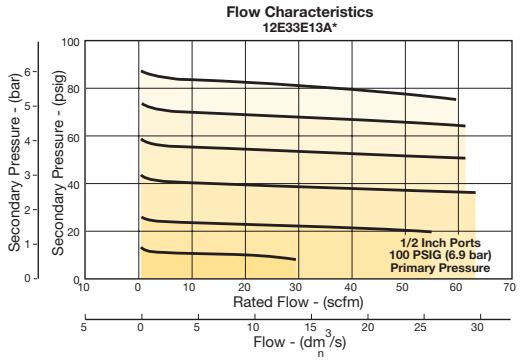

⚠ WARNING

Product rupture can cause serious injury.
Do not connect regulator to bottled gas.
Do not exceed Maximum primary pressure rating.

CAUTION:

REGULATOR PRESSURE ADJUSTMENT – The working range of knob adjustment is designed to permit outlet pressures within their full range. Pressure adjustment beyond this range is also possible because the knob is not a limiting device. This is a common characteristic of most industrial regulators, and limiting devices may be obtained only by special design. For best performance, regulated pressure should always be set by increasing the pressure up to the desired setting.

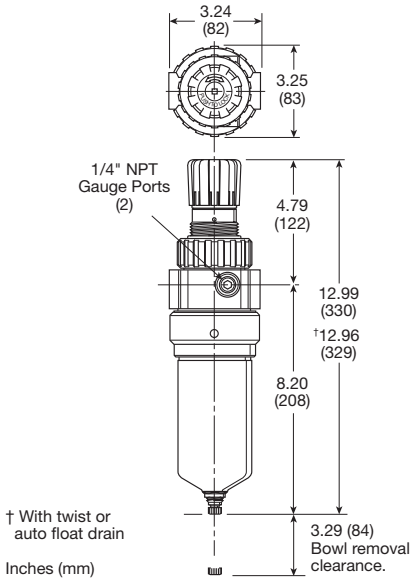

For inventory, lead times, and kit lookup, visit www.pdnplu.com

Parker Hannifin Corporation
Pneumatic Division
Richland, Michigan
www.parker.com/pneumatics

Tel: +45 63 12 83 00 | Email: ps@hymatik.com | www.hymatik.com | Hvidkaervej 27a, DK-5250 Odense SV, Denmark

15L Micro-Mist Lubricators – Economy

- Proportional oil delivery over a wide range of air flows
- Generates oil particles of 5 micron or smaller downstream to lubricate systems having complex piping arrangements
- Precision needle valve assures repeatable oil delivery and provides simple adjustment of delivery rate
- Ideal for low and high flow applications with changing air flow
- Transparent sight dome for 360° visibility
- Removable drip control knob for tamper resistance
- Integral 3/8" (NPT)





Operating information

Supply pressure (max):		
Plastic bowl		150 psig (10.3 bar)
Operating temperature:		
Plastic bowl		32°F to 125°F (0°C to 52°C)
Flow capacity†:		
High flow	1/4"	40 scfm (18.9 dm^3/s, ANR)
	3/8"	40 scfm (18.9 dm^3/s, ANR)
Minimum flow		2 scfm (0.9 dm^3/s, ANR) at 100 psig (6.9 bar)
Bowl capacity:		2.0 oz.
Weight		1.0 lb (0.45 kg)

† scfm = Standard cubic feet per minute at 90 psig inlet and 5 psig pressure drop.

Ordering Information:

Port Size	Description ‡	Part Number
3/8"	Poly Bowl, Metal Bowl Guard, No Drain, No Fill Plug	**15L22NA**

‡ For polycarbonate bowl and sight dome, see caution in Engineering Section A.

Suggested Lubricant .....**F442 Oil**
Petroleum based oil of 100 to 200 SUS viscosity at 100°F (38°C) and an aniline point greater than 200°F (93°C)
(DO NOT USE OILS WITH ADDITIVES, COMPOUNDED OILS CONTAINING SOLVENTS, GRAPHITE, DETERGENTS, OR SYNTHETIC OILS.)

☐ Most popular.

For inventory, lead times, and kit lookup, visit www.pdnplu.com

Parker Hannifin Corporation
Pneumatic Division
Richland, Michigan
www.parker.com/pneumatics

Tel: +45 63 12 83 00 | Email: ps@hymatik.com | www.hymatik.com | Hvidkaervej 27a, DK-5250 Odense SV, Denmark

Material Specifications

Body	Zinc
Transparent bowl	Polycarbonate
Bowl guard	Steel
Collar	Plastic
Drains, twist – body & nut	Plastic
Injector meter block & base assembly	Plastic
Seals	Nitrile
Sight dome	Polycarbonate
Sight gauge	Polyamide (nylon)

Repair and Service Kits

Adjustment knob	**P04121**
Bowl guard kit	**PS905P**
Poly bowl, no drain	**PS946P**
Twist drain	**PS512P**
Mounting bracket kit	**PS943P**
Service kit	**PS948P**
Sight dome kit	**PS740P**
Sight gauge kit	**PS914P**
Oil (1 quart)	**F442001**
Oil (1 gallon)	**F442002**
Oil (12 quart case)	**F442003**
Oil (4 gallon case)	**F442005**

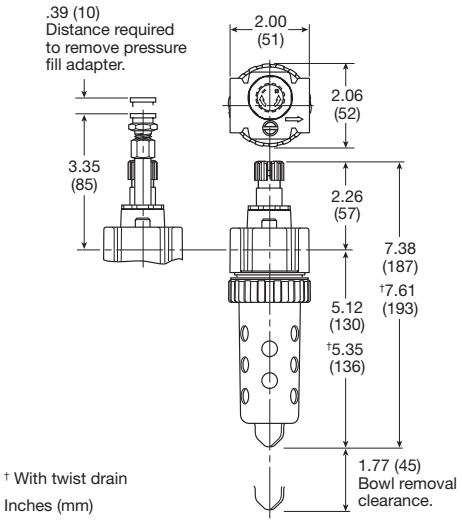

† With twist drain

Inches (mm)

Flow Charts

15L 1/4" Lubricator

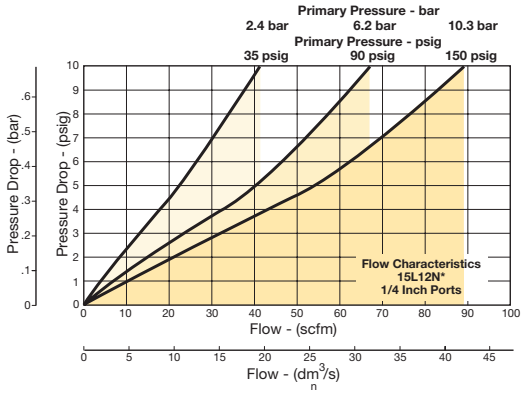

15L 3/8" Lubricator

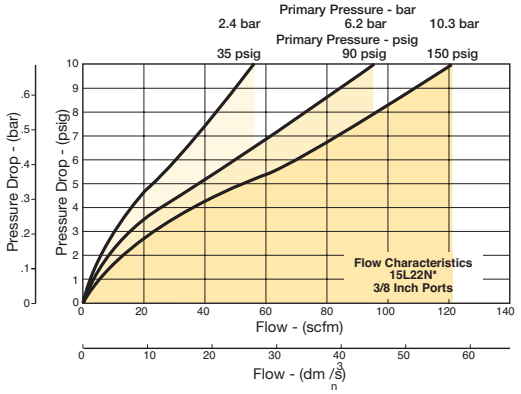

For inventory, lead times, and kit lookup, visit www.pdnplu.com

Parker Hannifin Corporation
Pneumatic Division
Richland, Michigan
www.parker.com/pneumatics

Tel: +45 63 12 83 00 | Email: ps@hymatik.com | www.hymatik.com | Hvidkaervej 27a, DK-5250 Odense SV, Denmark

16L Micro-Mist Lubricators – Compact

- Proportional oil delivery over a wide range of air flows
- Generates oil particles of 5 micron or smaller downstream to lubricate systems having complex piping arrangements
- Precision needle valve assures repeatable oil delivery and provides simple adjustment of delivery rate
- Ideal for low and high flow applications with changing air flow
- Transparent sight dome for 360° visibility
- Yellow fill cap identifies micro-mist lubricator
- Integral 1/4", 3/8", 1/2" (NPT)





Operating information

Supply pressure (max):		
Plastic bowl		150 psig (10.3 bar)
Metal bowl		250 psig (17.2 bar)
Operating temperature:		
Plastic bowl		32°F to 125°F (0°C to 52°C)
Metal bowl		32°F to 175°F (0°C to 80°C)
Flow capacity†:		
High flow	1/4"	40 scfm (18.9 dm^3/s, ANR)
	3/8"	60 scfm (28.3 dm^3/s, ANR)
	1/2"	90 scfm (42.5 dm^3/s, ANR)
Minimum flow		1 scfm (0.5 dm^3/s, ANR) at 100 psig (6.9 bar)
Bowl capacity:		2.6 oz.
Weight:		1.2 lb (0.5 kg)

† scfm = Standard cubic feet per minute at 90 psig inlet and 5 psig pressure drop.

Ordering Information:

Port Size	Description ‡	Part Number
1/4"	Poly Bowl, Metal Bowl Guard, No Drain, With Fill Plug	**16L12BE**
1/4"	Metal Bowl, Sight Gauge, Twist Drain, With Fill Plug	**16L14BE**
3/8"	Poly Bowl, Metal Bowl Guard, No Drain, With Fill Plug	**16L22BE**
3/8"	Metal Bowl, Sight Gauge, Twist Drain, With Fill Plug	**16L24BE**
1/2"	Poly Bowl, Metal Bowl Guard, No Drain, With Fill Plug	**16L32BE**
1/2"	Metal Bowl, Sight Gauge, Twist Drain, With Fill Plug	**16L34BE**

‡ For polycarbonate bowl and sight dome, see caution in Engineering Section A.

Suggested Lubricant ..... **F442 Oil**
Petroleum based oil of 100 to 200 SUS viscosity at 100°F (38°C) and an aniline point greater than 200°F (93°C)
(DO NOT USE OILS WITH ADDITIVES, COMPOUNDED OILS CONTAINING SOLVENTS, GRAPHITE, DETERGENTS, OR SYNTHETIC OILS.)

☐ **Most popular.**

For inventory, lead times, and kit lookup, visit www.pdnplu.com

Parker Hannifin Corporation
Pneumatic Division
Richland, Michigan
www.parker.com/pneumatics

Tel: +45 63 12 83 00 | Email: ps@hymatik.com | www.hymatik.com | Hvidkaervej 27a, DK-5250 Odense SV, Denmark

Material Specifications

Body	Zinc
Transparent bowls	Polycarbonate
Metal bowl (with sight gauge)	Zinc
Bowl guard	Steel
Collar	Plastic
Twist drain – body & nut	Plastic
Injector meter block & base assembly	Plastic
Seals	Nitrile
Sight dome	Polycarbonate
Sight gauge	Polyamide (nylon)

Repair and Service Kits

Adjustment knob	**P04121**
Bowl guard kit	**PS705P**
Poly bowl / no drain kit	**PS746P**
Poly bowl / twist drain kit	**PS717P**
Poly bowl / pressure fill kit	**PS719P**
Poly bowl / remote fill kit	**PS728P**
Metal bowl / sight gauge / twist drain kit	**PS729P**
Twist drain kit	**PS512P**
Fill cap kit	**PS742P**
Lubricator service kit	**PS748P**
Mounting bracket kit	**PS743P**
Pressure fill adapter kit	**PS716P**
Pressure fill button	**P11912**
Sight dome / fill cap kit	**PS739P**
Sight dome kit, polycarbonate	**PS740P**
Sight dome kit, nylon	**PS740N**
Oil (1 quart)	**F442001**
Oil (1 gallon)	**F442002**
Oil (12 quart case)	**F442003**
Oil (4 gallon case)	**F442005**

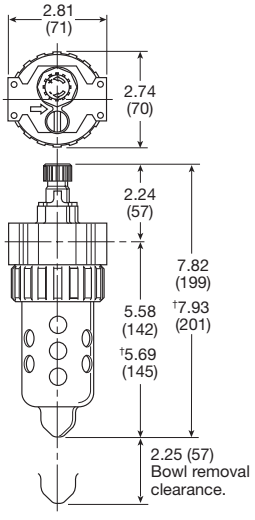

† With twist drain
Inches (mm)

Flow Charts

16L 1/4" Lubricator

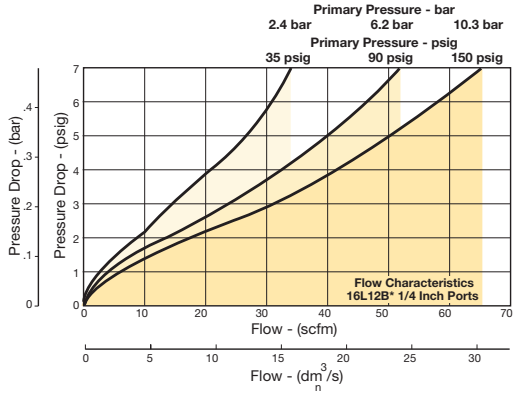

16L 3/8" Lubricator

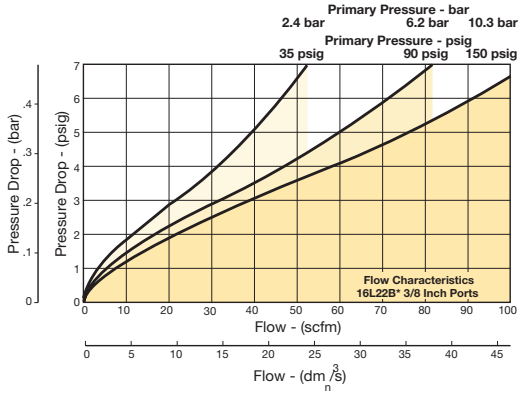

16L 1/2" Lubricator

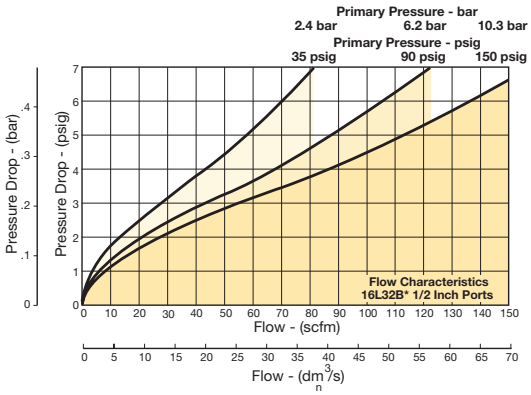

For inventory, lead times, and kit lookup, visit www.pdnplu.com

Parker Hannifin Corporation
Pneumatic Division
Richland, Michigan
www.parker.com/pneumatics

Tel: +45 63 12 83 00 | Email: ps@hymatik.com | www.hymatik.com | Hvidkaervej 27a, DK-5250 Odense SV, Denmark

17L Micro-Mist Lubricators – Standard

- Proportional oil delivery over a wide range of air flows
- Generates oil particles of 5 micron or smaller downstream to lubricate systems having complex piping arrangements
- Precision needle valve assures repeatable oil delivery and provides simple adjustment of delivery rate
- Ideal for low and high flow applications with changing air flow
- Transparent sight dome for 360° visibility
- Yellow fill cap identifies Micro-Mist Lubricator.
- Integral 1/2", 3/4" ports (NPT)





Operating information

Supply pressure (max):		
Plastic bowl		150 psig (10.3 bar)
Metal bowl		250 psig (17.2 bar)
Operating temperature:		
Plastic bowl		32°F to 125°F (0°C to 52°C)
Metal bowl		32°F to 175°F (0°C to 80°C)
Flow capacity†:		
High flow	1/2"	90 scfm (42.5 dm^3/s, ANR)
	3/4"	90 scfm (42.5 dm^3/s, ANR)
Minimum flow		1 scfm (0.5 dm^3/s, ANR) at 100 psig (6.9 bar)
Bowl capacity:		4.9 oz.
Weight:		1.9 lb (0.9 kg)

† scfm = Standard cubic feet per minute at 90 psig inlet and 5 psig pressure drop.

Ordering Information:

Port Size	Description ‡	Part Number
1/2"	Poly Bowl, Metal Bowl Guard, No Drain, With Fill Plug	**17L32BE**
1/2"	Metal Bowl, Sight Gauge, Twist Drain, With Fill Plug	**17L34BE**
1/2"	Poly Bowl, Metal Bowl Guard, Pressure Fill, With Fill Plug	**17L36BE**
3/4"	Poly Bowl, Metal Bowl Guard, No Drain, With Fill Plug	**17L42BE**
3/4"	Metal Bowl, Sight Gauge, Twist Drain, With Fill Plug	**17L44BE**
3/4"	Poly Bowl, Metal Bowl Guard, Pressure Fill, With Fill Plug	**17L46BE**

‡ For polycarbonate bowl and sight dome, see caution in Engineering Section A.

Suggested Lubricant ..... **F442 Oil**
Petroleum based oil of 100 to 200 SUS viscosity at 100°F (38°C) and an aniline point greater than 200°F (93°C)
(DO NOT USE OILS WITH ADDITIVES, COMPOUNDED OILS CONTAINING SOLVENTS, GRAPHITE, DETERGENTS, OR SYNTHETIC OILS.)

☐ Most popular.

For inventory, lead times, and kit lookup, visit www.pdnplu.com

Parker Hannifin Corporation
Pneumatic Division
Richland, Michigan
www.parker.com/pneumatics

Tel: +45 63 12 83 00 | Email: ps@hymatik.com | www.hymatik.com | Hvidkaervej 27a, DK-5250 Odense SV, Denmark

Standard Micro-Mist Lubricators

Prep-Air® II Series

Material Specifications

Body	Zinc
Transparent bowl	Polycarbonate
Metal bowl (with sight gauge)	Zinc
Bowl guard	Steel
Collar	Plastic or Metal
Twist drain– body & nut	Plastic
Injector meter block & base assembly	Plastic
Seals	Nitrile
Sight dome	Polycarbonate
Sight gauge	Polyamide (nylon)

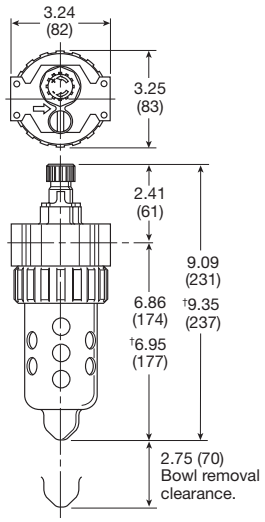

† With twist drain
Inches (mm)

Flow Charts

17L 1/2" & 3/4" Lubricator

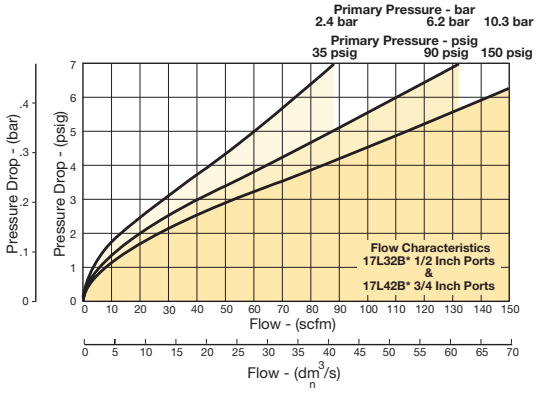

Repair and Service Kits

Adjustment knob	**P04121**
Bowl guard kit	**PS805P**
Poly bowl / no drain kit	**PS846P**
Poly bowl / twist drain kit	**PS817P**
Poly bowl / pressure fill kit	**PS819P**
Metal bowl / sight gauge / twist drain kit	**PS829P**
Metal bowl / sight gauge / pressure fill kit	**PS820P**
Twist drain kit	**PS512P**
Fill cap kit	**PS742P**
Lubricator service kit	**PS748P**
Mounting bracket kit	**PS843P**
Pressure fill adapter kit	**PS716P**
Pressure fill button	**P11912**
Sight dome / fill cap kit	**PS739P**
Sight dome kit, polycarbonate	**PS740P**
Sight dome kit, nylon	**PS740N**
Oil (1 quart)	**F442001**
Oil (1 gallon)	**F442002**
Oil (12 quart case)	**F442003**
Oil (4 gallon case)	**F442005**

Parker Hannifin Corporation
Pneumatic Division
Richland, Michigan
www.parker.com/pneumatics

Tel: +45 63 12 83 00 | Email: ps@hymatik.com | www.hymatik.com | Hvidkaervej 27a, DK-5250 Odense SV, Denmark

06L Mist Lubricators – Compact

- Proportional oil delivery over a wide range of air flows
- Precision needle valve assures repeatable oil delivery and provides simple adjustment of delivery rate
- Bowl can be filled while air line is under pressure
- Transparent sight dome for 360° visibility
- Integral 1/4", 3/8", 1/2" ports (NPT)





Operating information

Supply pressure (max):		
Plastic bowl		150 psig (10.3 bar)
Metal bowl		250 psig (17.2 bar)
Operating temperature:		
Plastic bowl		32°F to 125°F (0°C to 52°C)
Metal bowl		32°F to 175°F (0°C to 80°C)
Flow capacity†:		
High flow	1/4"	40 scfm (18.9 dm^3/s, ANR)
	3/8"	60 scfm (28.3 dm^3/s, ANR)
	1/2"	90 scfm 42.5 dm^3/s, ANR)
Minimum flow		0.5 2 scfm (0.24 dm^3/s, ANR) at 100 psig (6.9 bar)
Bowl capacity:		2.9 oz.
Weight:		1.2 lb (0.5 kg)

† scfm = Standard cubic feet per minute at 90 psig inlet and 5 psig pressure drop.

Ordering Information:

Port Size	Description ‡	Part Number
1/4"	Poly Bowl, Metal Bowl Guard, No Drain, With Fill Plug	**06L12BE**
1/4"	Metal Bowl, Sight Gauge, Twist Drain, With Fill Plug	**06L14BE**
3/8"	Poly Bowl, Metal Bowl Guard, No Drain, With Fill Plug	**06L22BE**
3/8"	Metal Bowl, Sight Gauge, Twist Drain, With Fill Plug	**06L24BE**
1/2"	Poly Bowl, Metal Bowl Guard, No Drain, With Fill Plug	**06L32BE**
1/2"	Metal Bowl, Sight Gauge, Twist Drain, With Fill Plug	**06L34BE**
G1/2"	Poly Bowl, Metal Bowl Guard, No Drain, With Fill Plug	**06L32BE1**

‡ For polycarbonate bowl and sight dome, see caution in Engineering Section A.

Suggested Lubricant ..... **F442 Oil**
Petroleum based oil of 100 to 200 SUS viscosity at 100°F (38°C) and an aniline point greater than 200°F (93°C)
(DO NOT USE OILS WITH ADDITIVES, COMPOUNDED OILS CONTAINING SOLVENTS, GRAPHITE, DETERGENTS, OR SYNTHETIC OILS.)

☐ Most popular.

For inventory, lead times, and kit lookup, visit www.pdnplu.com

Parker Hannifin Corporation
Pneumatic Division
Richland, Michigan
www.parker.com/pneumatics

Tel: +45 63 12 83 00 | Email: ps@hymatik.com | www.hymatik.com | Hvidkaervej 27a, DK-5250 Odense SV, Denmark

Material Specifications

Body	Zinc
Transparent bowl	Polycarbonate
Metal bowl (with sight gauge)	Zinc
Bowl guard	Steel
Collar	Plastic
Twist drain – body & nut	Plastic
Injector meter block & base assembly	Plastic
Seals	Nitrile
Sight dome	Polycarbonate
Sight gauge	Polyamide (nylon)

Repair and Service Kits

Adjustment knob	**P04121**
Bowl guard kit	**PS705P**
Poly bowl / no drain kit	**PS746P**
Poly bowl / twist drain kit	**PS717P**
Poly bowl / pressure fill kit	**PS719P**
Metal bowl / sight gauge / twist drain kit	**PS729P**
Metal bowl / sight gauge / pressure fill kit	**PS720P**
Twist drain kit	**PS512P**
Fill cap kit	**PS741P**
Lubricator service kit	**PS718P**
Mounting bracket kit	**PS743P**
Pressure fill adapter kit	**PS716P**
Pressure fill button	**P11912**
Sight dome / fill cap kit	**PS738P**
Sight dome kit, polycarbonate	**PS740P**
Sight dome kit, nylon	**PS740N**
Oil (1 quart)	**F442001**
Oil (1 gallon)	**F442002**
Oil (12 quart case)	**F442003**
Oil (4 gallon case)	**F442005**

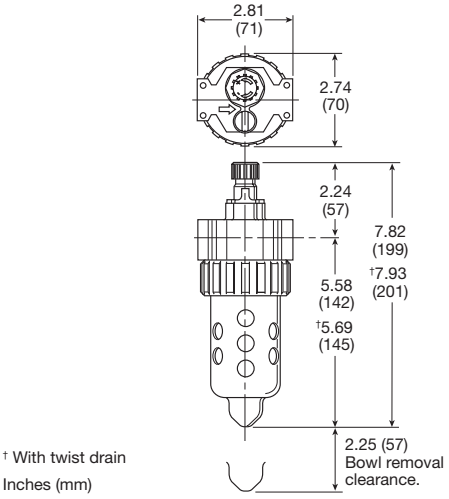

† With twist drain
Inches (mm)

Flow Charts

06L 1/4" Lubricator

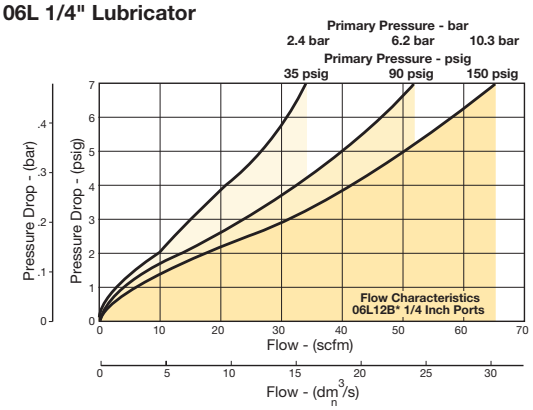

06L 3/8" Lubricator

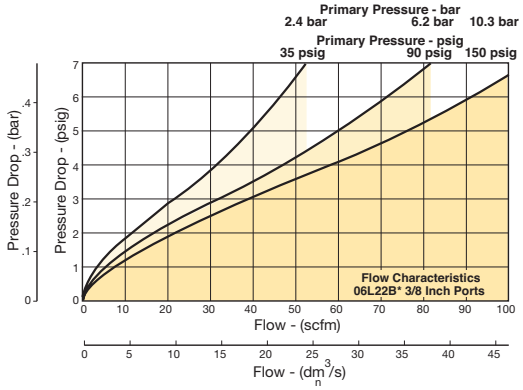

06L 1/2" Lubricator

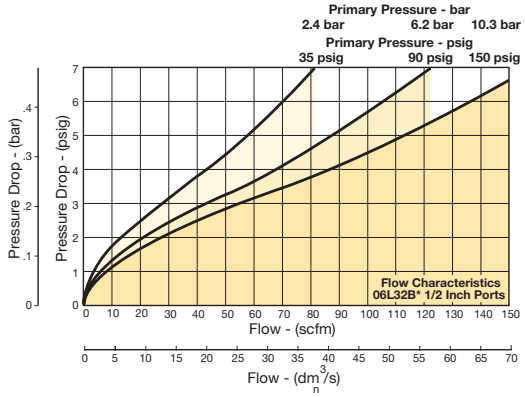

For inventory, lead times, and kit lookup, visit www.pdnplu.com

Parker Hannifin Corporation
Pneumatic Division
Richland, Michigan
www.parker.com/pneumatics

Tel: +45 63 12 83 00 | Email: ps@hymatik.com | www.hymatik.com | Hvidkaervej 27a, DK-5250 Odense SV, Denmark

07L Mist Lubricators – Standard

- Proportional oil delivery over a wide range of air flows
- Precision needle valve assures repeatable oil delivery and provides simple adjustment of delivery rate
- Bowl can be filled while air line is under pressure
- Transparent sight dome for 360° visibility
- Integral 1/2", 3/4" ports (NPT)





Operating information

Supply pressure (max):		
Plastic bowl		150 psig (10.3 bar)
Metal bowl		250 psig (17.2 bar)
Operating temperature:		
Plastic bowl		32°F to 125°F (0°C to 52°C)
Metal bowl		32°F to 175°F (0°C to 80°C)
Flow capacity†:		
High flow	1/2"	90 scfm (42.5 dm^3/s, ANR)
	3/4"	90 scfm (42.5 dm^3/s, ANR)
Minimum flow		0.5 2 scfm (0.24 dm^3/s, ANR) at 100 psig (6.9 bar)
Bowl capacity:		6.0 oz.
Weight:		1.9 lb (0.9 kg)

† scfm = Standard cubic feet per minute at 90 psig inlet and 5 psig pressure drop.

Ordering Information:

Port Size	Description ‡	Part Number
1/2"	Poly Bowl, Metal Bowl Guard, No Drain, With Fill Plug	**07L32BE**
1/2"	Metal Bowl, Sight Gauge, Twist Drain, With Fill Plug	**07L34BE**
1/2"	Metal Bowl, Sight Gauge, Twist Drain, With Fill Plug	**07L34FE**
1/2"	Poly Bowl, Metal Bowl Guard, Twist Drain, With Fill Plug	**07L3NBE**
3/4"	Poly Bowl, Metal Bowl Guard, No Drain, With Fill Plug	**07L42BE**
3/4"	Metal Bowl, Sight Gauge, Twist Drain, With Fill Plug	**07L44BE**
1/2" BSPP	Poly Bowl, Metal Bowl Guard, No Drain, With Fill Plug	**07L32BE1**

‡ For polycarbonate bowl and sight dome, see caution in Engineering Section A.

Suggested Lubricant ..... **F442 Oil**
Petroleum based oil of 100 to 200 SUS viscosity at 100°F (38°C) and an aniline point greater than 200°F (93°C)
(DO NOT USE OILS WITH ADDITIVES, COMPOUNDED OILS CONTAINING SOLVENTS, GRAPHITE, DETERGENTS, OR SYNTHETIC OILS.)

☐ Most popular.

For inventory, lead times, and kit lookup, visit www.pdnplu.com

Parker Hannifin Corporation
Pneumatic Division
Richland, Michigan
www.parker.com/pneumatics

Tel: +45 63 12 83 00 | Email: ps@hymatik.com | www.hymatik.com | Hvidkaervej 27a, DK-5250 Odense SV, Denmark

Standard Mist Lubricators

Prep-Air® II Series

Material Specifications

Body	Zinc
Transparent bowl	Polycarbonate
Metal bowl (with sight gauge)	Zinc
Bowl guard	Steel
Collar	Plastic or metal
Twist drain – body & nut	Plastic
Injector meter block & base assembly	Plastic
Seals	Nitrile
Sight dome	Polycarbonate
Sight gauge	Polyamide (nylon)

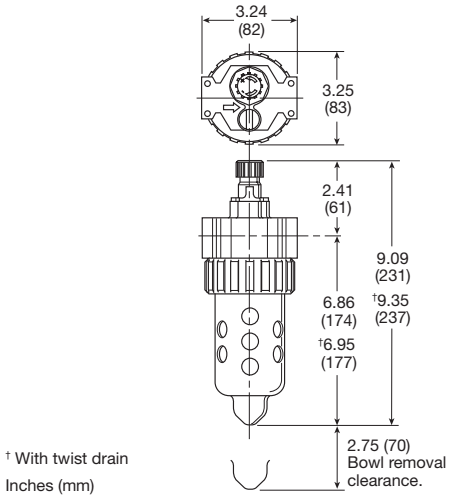

† With twist drain

Inches (mm)

Flow Charts

07L 1/2" & 3/4" Lubricator

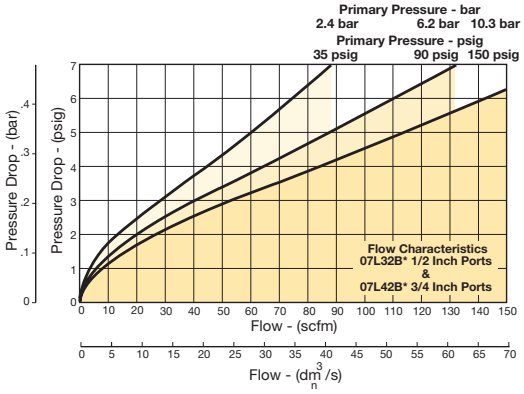

Repair and Service Kits

Adjustment knob	**P04121**
Bowl guard kit	**PS805P**
Poly bowl / no drain	**PS846P**
Poly bowl / twist drain	**PS817P**
Poly bowl / pressure fill	**PS819P**
Metal bowl / sight gauge / twist drain	**PS829P**
Metal bowl / sight gauge / pressure fill	**PS820P**
Twist drain kit	**PS512P**
Fill cap kit	**PS741P**
Lubricator service kit	**PS718P**
Mounting bracket kit	**PS843P**
Pressure fill adapter kit	**PS716P**
Pressure fill button	**P11912**
Sight dome / fill cap kit	**PS738P**
Sight dome kit, polycarbonate	**PS740P**
Sight dome kit, nylon	**PS740N**
Oil (1 quart)	**F442001**
Oil (1 gallon)	**F442002**
Oil (12 quart case)	**F442003**
Oil (4 gallon case)	**F442005**

Parker Hannifin Corporation
Pneumatic Division
Richland, Michigan
www.parker.com/pneumatics

Tel: +45 63 12 83 00 | Email: ps@hymatik.com | www.hymatik.com | Hvidkaervej 27a, DK-5250 Odense SV, Denmark

06 Compact, 07 Standard Close Nippled Series Combinations

- Regulator can be mounted with knob in up or down position
- 40 micron filter element standard, 5 micron optional
- Manual twist drain
- Relieving regulator

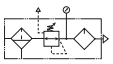

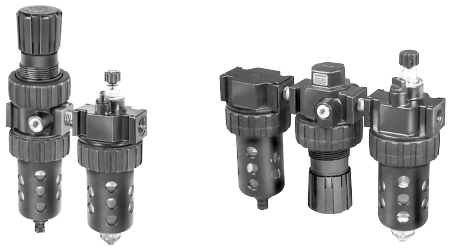

06A/16G Compact Standard Close Nippled Series Combinations:

Port Size	Filter Bowl Type ‡	Element Type	Relief Type	Pressure Range	Lubricator Bowl Type	Lubricator Type	2-unit / 3-unit	Part Numbers
3/8"	Poly Bowl, Metal Bowl Guard, Twist Drain	40 micron	Relieving	2-125 psi w/out gauge	Poly Bowl, Metal Bowl Guard, No Drain	Mist, With Fill Plug	2-unit	**06G22A13A2BC**
3/8"	Metal Bowl, Sight Gauge, Twist Drain	40 micron	Relieving	2-125 psi w/out gauge	Metal Bowl, Sight Gauge, Twist Drain	Mist, With Fill Plug	2-unit	**06G24A13A4BC**
1/2"	Poly Bowl, Metal Bowl Guard, Twist Drain	40 micron	Relieving	2-125 psi w/ gauge	Poly Bowl, Metal Bowl Guard, No Drain	Mist, With Fill Plug	2-unit	**06G32A18A2BC**
1/2"	Poly Bowl, Metal Bowl Guard, Twist Drain	40 micon	Relieving	2-125 psi w/ gauge	Poly Bowl, Metal Bowl Guard, No Drain	Micro-Mist, With Fill Plug	3-unit	**16G32A18A2BC**

07A/17G Standard Close Nippled Series Combinations:

Port Size	Filter Bowl Type ‡	Element Type	Relief Type	Pressure Range	Lubricator Bowl Type	Lubricator Type	2-unit / 3-unit	Part Numbers
1/2"	Metal Bowl, Twist Drain	40 micron	Relieving	2-125 psi w/out gauge	Metal Bowl, Sight Gauge, Twist Drain	Micro-Mist, With Fill Plug	2-unit	**17G33A13A4BD**
1/2"	Poly Bowl, Metal Bowl Guard, Twist Drain	40 micron	Relieving	2-125 psi w/out gauge	Poly Bowl, Metal Bowl Guard, No Drain	Mist, With Fill Plug	3-unit	**07A32A13A2BD**
1/2"	Metal Bowl, Twist Drain	40 micron	Relieving	2-125 psi w/ gauge	Metal Bowl, Sight Gauge, Twist Drain	Mist, With Fill Plug	3-unit	**07A33A18A4BD**
3/4"	Poly Bowl, Metal Bowl Guard, Twist Drain	40 micron	Relieving	2-125 psi w/out gauge	Poly Bowl, Metal Bowl Guard, No Drain	Mist, With Fill Plug	3-unit	**07A42A13A2BD**
3/4"	Poly Bowl, Metal Bowl Guard, Twist Drain	40 micron	Relieving	2-125 psi w/ gauge	Poly Bowl, Metal Bowl Guard, No Drain	Mist, With Fill Plug	3-unit	**07A42A18A2BD**
3/4"	Poly Bowl, Metal Bowl Guard, Auto Float Drain	5 micron	Relieving	2-125 psi w/ gauge	Poly Bowl, Metal Bowl Guard, No Drain	Mist, With Fill Plug	3-unit	**07A46B18A2BD**

⚠ WARNING

Product rupture can cause serious injury.
Do not connect regulator to bottled gas.
Do not exceed Maximum primary pressure rating.

CAUTION:

REGULATOR PRESSURE ADJUSTMENT – The working range of knob adjustment is designed to permit outlet pressures within their full range. Pressure adjustment beyond this range is also possible because the knob is not a limiting device. This is a common characteristic of most industrial regulators, and limiting devices may be obtained only by special design. For best performance, regulated pressure should always be set by increasing the pressure up to the desired setting.

☐ Most popular.

For inventory, lead times, and kit lookup, visit www.pdnplu.com

Parker Hannifin Corporation
Pneumatic Division
Richland, Michigan
www.parker.com/pneumatics

Tel: +45 63 12 83 00 | Email: ps@hymatik.com | www.hymatik.com | Hvidkaervej 27a, DK-5250 Odense SV, Denmark

Ordering Information:

16A 1 2 A 13 A 2 B C

Series	
Micro-Mist Compact, 3-Unit	16A
Micro-Mist Compact, 2-Unit	16G
Micro-Mist Standard, 2-Unit	17G
Mist Compact, 3-Unit	06A
Mist Standard, 3-Unit	07A
Mist Compact, 2-Unit	06G

Port Size	
1/4 Inch	1
3/8 Inch (06/16)	2
1/2 Inch	3
3/4 Inch (07/17)	4

Filter Bowl Options	
Poly Bowl, Metal Bowl Guard, Twist Drain	2
Poly Bowl, Metal Bowl Guard, Auto Float Drain	6
Metal Bowl, Twist Drain	3
Metal Bowl, Sight Gauge, Auto Float Drain	4

Filter Element	
40 Micron	A
5 Micron	B

Pressure Range			
Without Gauge		With Gauge	
13	125 psig	18	125 psig

Relief	
A	Relieving

Lubricator Body Options	
B	With Fill Plug

Lubricator Bowl Options	
2	Poly Bowl, Metal Bowl Guard, No Drain
4	Metal Bowl, Sight Gauge, Twist Drain

Engineering Level	
C	06A, 16A, 06G, 16G Current
D	07A, 17A, 07G, 17G Current

Reference Only (See descrete part list)

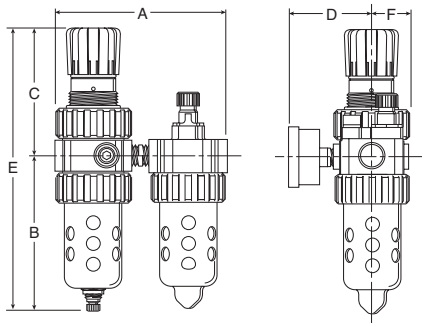

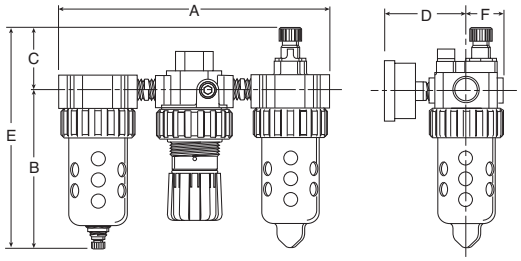

06G, 16G Series

A	B	C	D	E	F
6.13 (156)	5.69 (145)	4.69 (119)	3.18 (81)	10.38 (264)	1.37 (35)

06A, 16A Series

A	B	C	D	E	F
9.45 (240)	5.69 (145)	2.24 (57)	3.18 (81)	7.93 (201)	1.37 (35)

07G, 17G Series

A	B	C	D	E	F
6.99 (178)	6.97 (177)	4.79 (122)	3.44 (87)	11.76 (299)	1.63 (41)

07A, 17A Series

A	B	C	D	E	F
10.74 (2738)	6.97 (177)	2.41 (61)	3.44 (87)	9.38 (238)	1.63 (41)

Inches (mm)
• All dimensions nominal.

Inches (mm)
• All dimensions nominal.

For inventory, lead times, and kit lookup, visit www.pdnplu.com

Parker Hannifin Corporation
Pneumatic Division
Richland, Michigan
www.parker.com/pneumatics

Tel: +45 63 12 83 00 | Email: ps@hymatik.com | www.hymatik.com | Hvidkaervej 27a, DK-5250 Odense SV, Denmark

07 Standard Modular Series Combinations

- Regulator can be mounted with knob in up or down position
- 40 micron filter element standard, 5 micron optional
- Manual twist drain
- Relieving regulator

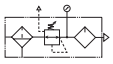

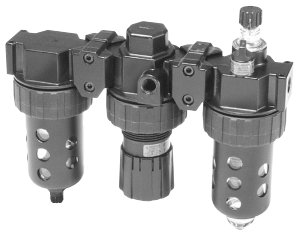

07B/17B/17H Standard Modular Series Combinations:

Port Size	Filter Bowl Type ‡	Element Type	Relief Type	Pressure Range	Lubricator Bowl Type	Lubricator Type	2-unit / 3-unit	Modular Options	Part Numbers
3/4"	Metal Bowl, Sight Gauge, Twist Drain	5 micron	Relieving	5-250 psi w/ gauge	Metal Bowl, Sight Gauge, Twist Drain	Micro-Mist, With Fill Plug	2-unit		**17H44B21A4BD**
1/2"	Poly Bowl, Metal Bowl Guard, Twist Drain	40 micron	Relieving	2-125 psi w/out gauge	Poly Bowl, Metal Bowl Guard, No Drain	Mist, With Fill Plug	3-unit		**07B32A13A2BD**
1/2"	Poly Bowl, Metal Bowl Guard, Twist Drain	40 micron	Relieving	2-125 psi w/ gauge	Poly Bowl, Metal Bowl Guard, No Drain	Mist, With Fill Plug	3-unit	W/ Mounting Bracket	**07B32A18A2BDW**
1/2"	Metal Bowl, Twist Drain	40 micron	Relieving	5-250 psi w/ gauge	Metal Bowl, Twist Drain	Mist, With Fill Plug	3-unit		**07B33A21A3BD**
3/4"	Metal Bowl, Twist Drain	40 micron	Relieving	2-125 psi w/ gauge	Metal Bowl, Sight Gauge, Twist Drain	Mist, With Fill Plug	3-unit	W/ Mounting Bracket	**07B43A18A4BDW**
1/2"	Poly Bowl, Metal Bowl Guard, Twist Drain	40 micron	Relieving	2-125 psi w/ gauge	Poly Bowl, Metal Bowl Guard, No Drain	Micro-Mist, With Fill Plug	3-unit		**17B32A18A2BD**
3/4"	Poly Bowl, Metal Bowl Guard, Twist Drain	40 micron	Relieving	2-125 psi w/ gauge	Poly Bowl, Metal Bowl Guard, No Drain	Micro-Mist, With Fill Plug	3-unit		**17B42A18A2BD**

⚠ WARNING

Product rupture can cause serious injury.
Do not connect regulator to bottled gas.
Do not exceed Maximum primary pressure rating.

CAUTION:

REGULATOR PRESSURE ADJUSTMENT – The working range of knob adjustment is designed to permit outlet pressures within their full range. Pressure adjustment beyond this range is also possible because the knob is not a limiting device. This is a common characteristic of most industrial regulators, and limiting devices may be obtained only by special design. For best performance, regulated pressure should always be set by increasing the pressure up to the desired setting.

☐ Most popular.

For inventory, lead times, and kit lookup, visit www.pdnplu.com

Parker Hannifin Corporation
Pneumatic Division
Richland, Michigan
www.parker.com/pneumatics

Tel: +45 63 12 83 00 | Email: ps@hymatik.com | www.hymatik.com | Hvidkaervej 27a, DK-5250 Odense SV, Denmark

Ordering Information:

17B	1	2	A	13	A	2	B	D	

Series

Micro-Mist Standard, 3-Unit	17B
Micro-Mist Standard, 2-Unit	17H
Mist Standard, 3-Unit	07B

Port Size

1/4 Inch (06/16)	1
3/8 Inch	2
1/2 Inch (06/16 with Port Blocks)	3
3/4 Inch (07/17)	4

Filter Bowl Options

Poly Bowl, Metal Bowl Guard, Twist Drain	2
Metal Bowl, Twist Drain	3
Metal Bowl, Sight Gauge, Auto Float Drain	4

Filter Element

40 Micron	A
5 Micron	B

Pressure Range

Without Gauge		With Gauge	
13	125 psig	18	125 psig
15*	250 psig	21*	250 psig

* Only available on metal bowl.

Relief

A	Relieving

Lubricator Bowl Options

2	Poly Bowl, Metal Bowl Guard, No Drain
4	Metal Bowl, Sight Gauge, Twist Drain

Lubricator Body Options

B	With Fill Plug

Engineering Level

D	07B, 17B, 07H, 17H Current

Modular Options

Blank	No Port Blocks
W	With Mounting Bracket

Reference Only (See descrete part list)

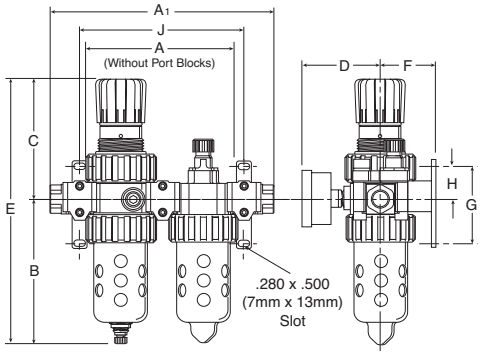

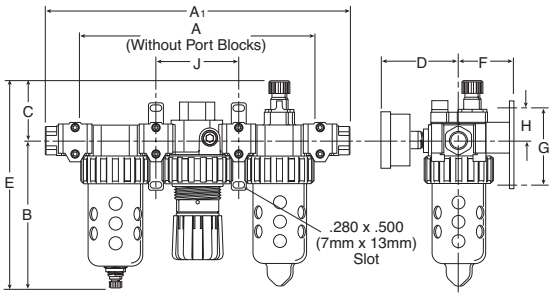

06H, 16H Series (Reference Only)

A	A1	B	C	D	E	F	G	H	J
6.10	9.04	5.69	4.69	3.18	10.38	2.00	3.58	1.40	6.65
(155)	(230)	(145)	(119)	(81)	(264)	(51)	(91)	(36)	(169)

06B, 16B Series (Reference Only)

A	A1	B	C	D	E	F	G	H	J
9.46	12.39	5.69	2.24	3.18	7.93	2.00	3.58	1.40	3.33
(240)	(315)	(145)	(57)	(81)	(202)	(51)	(91)	(36)	(85)

07H, 17H Series

A	A1	B	C	D	E	F	G	H	J
7.00	10.28	6.97	4.79	3.44	11.76	2.09	3.58	1.40	7.51
(178)	(261)	(177)	(122)	(87)	(299)	(53)	(91)	(36)	(191)

07B, 17B Series

A	A1	B	C	D	E	F	G	H	J
10.75	14.03	6.97	2.41	3.44	9.38	2.18	3.58	1.40	3.76
(273)	(356)	(177)	(61)	(87)	(238)	(55)	(91)	(36)	(95)

Inches (mm)
• All dimensions nominal.

Inches (mm)
• All dimensions nominal.

For inventory, lead times, and kit lookup, visit www.pdnplu.com

Parker Hannifin Corporation
Pneumatic Division
Richland, Michigan
www.parker.com/pneumatics

Tel: +45 63 12 83 00 | Email: ps@hymatik.com | www.hymatik.com | Hvidkaervej 27a, DK-5250 Odense SV, Denmark

Service Kits

Body connector, (05 series)	**PS954P**
Body connector, (06 series)	**PS754P**
Body connector, (07 series)	**PS854P**
Wall mounting kits (05 series)	**PS955P**
Wall mounting kits (06 & 07 series)	**PS755P**
Lockout valves, (06 series)	**PS756P**
Lockout valves, (07 series)	**PS856P**
Modular manifold block 3/8" port, (06 series)	**PS757P**
Modular manifold block 1/2" port, (07 series)	**PS857P**

Body Connectors

Body connectors allow you to easily assemble and disassemble modular combinations.

Body connectors are required whenever you assemble two or more pieces together.

Each kit includes one set.

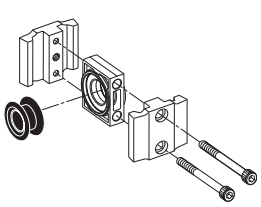

PS954P (05)

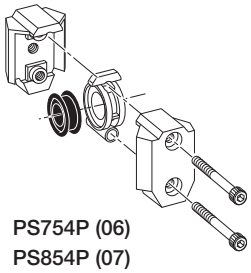

PS754P (06)
PS854P (07)

Modular Manifold Block

A modular manifold block can be used between any two modular units to give additional outlet ports. The manifold block provides 2 additional outlets in 3/8" and 1/2" sizes. Any standard pipe plug can be used to close off unused ports.

NOTE: Body connectors are not supplied with manifold blocks.

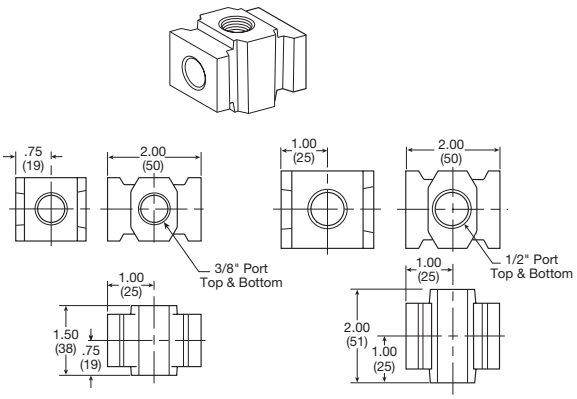

PS757P (06)

PS857P (07)

Lockout Valves

Lockout Valves provide positive shut-off and exhaust capability to isolate Modular units so they can be easily removed from the line and can be locked in a closed position. Center position can be used as a slow start. Accepts #3 padlock.

NOTE: Body connectors are not supplied with lockout valves.

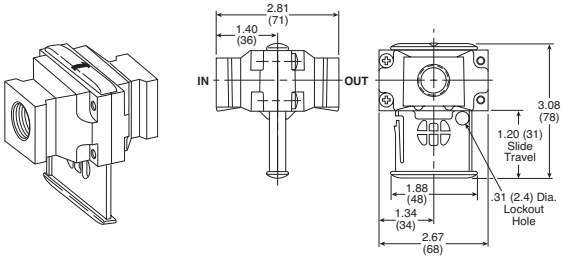

Wall Mounting Kits

Wall mounting kits are available for mounting your modular assemblies and can be assembled and used with any standard body connector set.

Since modular combinations are always identical in size, you can predrill for wall mounting on your equipment.

Kit includes 1 assembly.

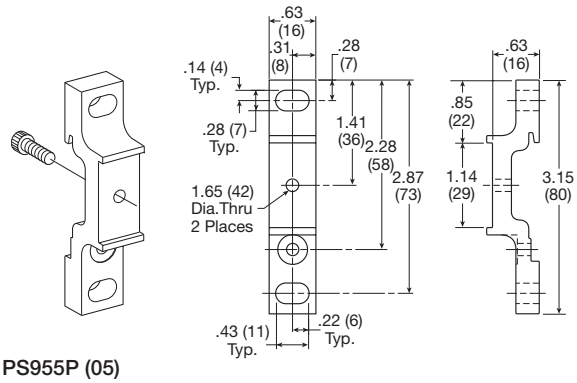

PS955P (05)

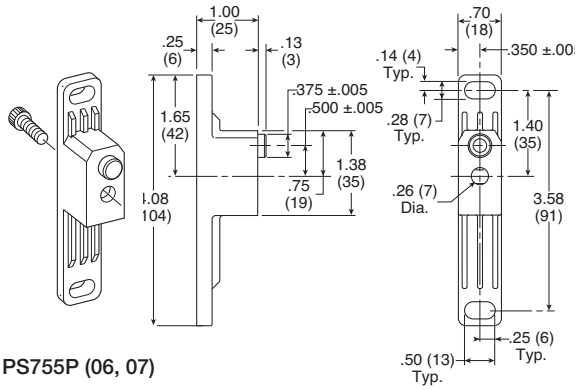

PS755P (06, 07)

For inventory, lead times, and kit lookup, visit www.pdnplu.com

Parker Hannifin Corporation
Pneumatic Division
Richland, Michigan
www.parker.com/pneumatics

Tel: +45 63 12 83 00 | Email: ps@hymatik.com | www.hymatik.com | Hvidkaervej 27a, DK-5250 Odense SV, Denmark

Modular Accessories – 06 Compact & 07 Standard Series

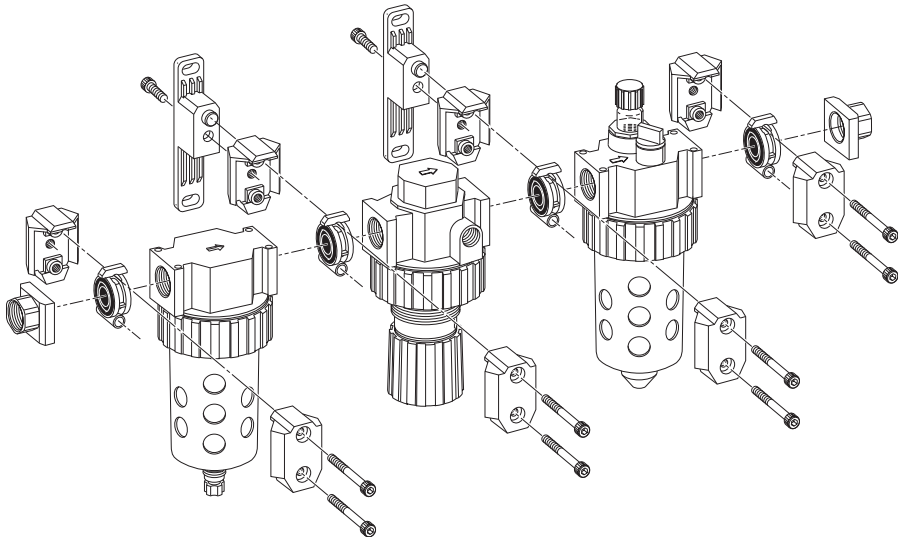

Port Block Connector Kits

06 Series

1/4" Port block kits, NPT	**PS750P**
1/4" Port block kits, BSPP	**PS765P** †
3/8" Port block kits, NPT	**PS751P**
3/8" Port block kits, BSPP	**PS766P** †
1/2" Port block kits, NPT	**PS752P***
1/2" Port block kits, BSPP	**PS767P*** †

07 Series

1/4" Port block kits, NPT	**PS850P**
1/4" Port block kits, BSPP	**PS865P**
3/8" Port block kits, NPT	**PS851P**
3/8" Port block kits, BSPP	**PS866P**
1/2" Port block kits, NPT	**PS852P**
1/2" Port block kits, BSPP	**PS867P** ‡
3/4" Port block kits, NPT	**PS853P**
3/4" Port block kits, BSPP	**PS860P**

* Use 1/4 or 3/8 ported bodies.
† 1/4, 3/8 & 1/2 inch meet ISO 1179-1 Standard.
‡ 1/2 inch meets ISO 1179-1 Standard.

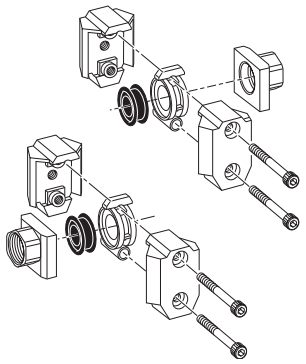

Port block connectors allow you to make threaded port connections to modular units and are available in various port sizes to match your system requirements.

Each kit includes all the necessary pieces to make two port connections.

Parker Hannifin Corporation
Pneumatic Division
Richland, Michigan
www.parker.com/pneumatics

Tel: +45 63 12 83 00 | Email: ps@hymatik.com | www.hymatik.com | Hvidkaervej 27a, DK-5250 Odense SV, Denmark

Mounting Bracket Kits

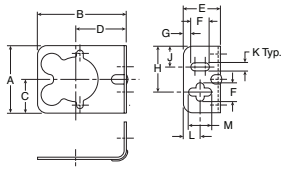

PS417BP
(Includes Panel Mount Nut)

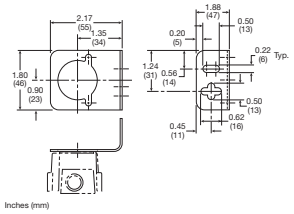

PS419
(Includes Panel Mount Nut)

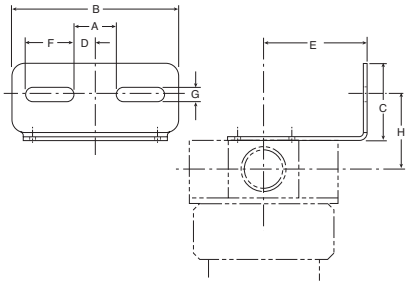

PS743P, PS843P

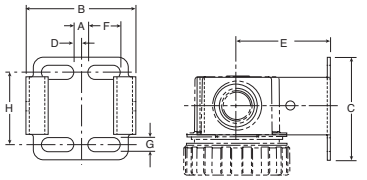

PS943P

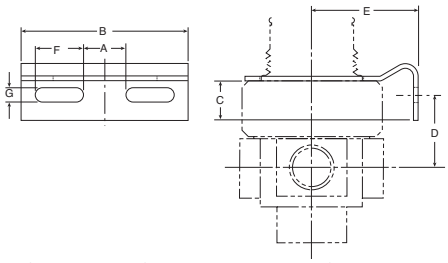

PS707P & PS807P
(Includes Panel Mount Nut)

PS963P
(Includes Aluminum Panel Mount Nut)

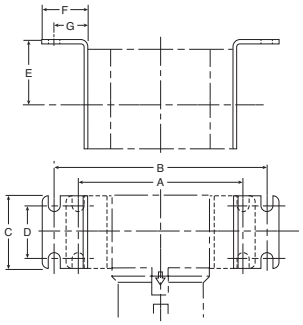

P3NKA00MW

Dimensions

A	B	C	D	E	F	G	H	J	K	L	M	Kit
1.80 (46)	2.37 (60)	0.90 (23)	1.35 (34)	1.00 (25)	0.50 (13)	0.20 (5)	1.24 (31)	0.56 (14)	0.22 (6)	0.45 (11)	0.62 (16)	**PS417BP** (10F, 14F, P3A, 14R, 14E)
1.80 (46)	2.17 (55)	0.90 (23)	1.35 (34)	1.00 (25)	0.50 (13)	0.20 (5)	1.24 (31)	0.56 (14)	0.22 (6)	0.45 (11)	0.62 (16)	**PS419** (04L)
0.84 (21)	3.25 (83)	1.50 (38)	0.42 (11)	2.00 (51)	0.94 (24)	0.28 (7)	1.44 (37)	—	—	—	—	**PS743P** (06F, 11F, 06L, 16L)
1.00 (25)	3.94 (100)	1.57 (40)	0.50 (13)	2.19 (56)	1.25 (32)	0.28 (7)	1.68 (43)	—	—	—	—	**PS843P** (07F, 12F, 07L, 17L)
0.28 (7)	2.12 (54)	2.00 (51)	0.14 (4)	1.85 (47)	0.63 (16)	0.28 (7)	1.41 (36)	—	—	—	—	**PS943P** (05F, 15F, 15L)
0.84 (21)	2.59 (66)	0.49 (12)	1.02 (26)	1.85 (47)	0.61 (15)	0.28 (7)	—	—	—	—	—	**PS963P** (05R, 10R, 05E, 27E)
0.84 (21)	3.26 (83)	0.77 (20)	1.46 (37)	2.00 (51)	0.94 (24)	0.28 (7)	—	—	—	—	—	**PS707P** (06R, 06E, 11R)
1.00 (25)	3.94 (100)	0.65 (17)	1.68 (43)	2.19 (56)	1.25 (32)	0.28 (7)	—	—	—	—	—	**PS807P** (07R, 07E, 12R)
6.22 (158)	8.19 (208)	2.75 (70)	1.97 (50)	2.36 (60)	1.77 (45)	1.30 (33)	—	—	—	—	—	P3NKA00MW (P3NF, P3NR, P3NE, P3NL)

inches (mm)

For inventory, lead times, and kit lookup, visit www.pdnplu.com

Parker Hannifin Corporation
Pneumatic Division
Richland, Michigan
www.parker.com/pneumatics

For inventory, lead times, and kit lookup, visit www.pdnplu.com

Parker Hannifin Corporation
Pneumatic Division
Richland, Michigan
www.parker.com/pneumatics



Air Preparation Products
Stainless Steel Products

PF504 Particulate Filters	F2-F3
PF10 Particulate Filters	F4-F5
PF501 Coalescing Filters	F6-F7
PF11 Coalescing Filters	F8-F9
PR354 & PR364 Regulators	F10-F11
PR10 & PR11 Regulators	F12-F13
PB548 & PB558 Filter / Regulators	F14-F15
PB11 & PB12 Filter / Regulatos	F16-F17
PL10 Lubricators	F18-F19

Parker Hannifin Corporation
Pneumatic Division
Richland, Michigan
www.parker.com/pneumatics

Tel: +45 63 12 83 00 | Email: ps@hymatik.com | www.hymatik.com | Hvidkaervej 27a, DK-5250 Odense SV, Denmark

PF504 Particulate Filters – Miniature

- Stainless steel construction handles most corrosive environments
- Fluorocarbon seals standard
- Meets NACE specifications MR-01-75/ISO 15156
- 1/8" female threaded drain
- 1/4" port (NPT, BSPP)



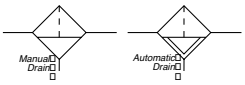

Port Size	Description	Part Number
1/4"	Twist Drain, NPT	**PF504-02DHSS**
1/4"	Auto Pulse Drain, NPT	**PF504-02DHRSS**

Operating information

Operating pressure:	
Twist drain	0 to 300 psig (0 to 20.7 bar)
Auto pulse drain	10 to 175 psig (0 to 12 bar)
Operating temperature:	
Twist drain	0°F to 180°F (-18°C to 82°C)
Auto pulse drain	32°F to 150°F (0°C to 66°C)
Flow capacity†:	23 scfm (10.9 dm^3/s, ANR)
Bowl capacity:	1.0 oz.
Filter rating:	20 micron
Sump capacity:	0.4 oz.
Weight:	0.6 lb (0.27 kg)

Note: Air must be dry enough to avoid ice formation at temperatures below 32°F (0°C)

† scfm = Standard cubic feet per minute at 90 psig inlet and 5 psig pressure drop.

Ordering Information:

PF504 – 02 D H ☐ SS

Port Type	
NPT	–
BSPP	G

Port Size	
1/4 inch	02

Bowl Type	
Metal Bowl without Sight Gauge	D

Element	
H	20 micron
G	5 micron

Option	
Blank	Manual Twist Drain
R	Auto Pulse Drain

Material	
SS	Stainless Steel

☐ Most popular.

For inventory, lead times, and kit lookup, visit www.pdnplu.com

Parker Hannifin Corporation
Pneumatic Division
Richland, Michigan
www.parker.com/pneumatics

Operation

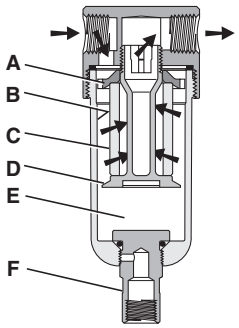

First Stage Filtration:

Air enters at inlet port and flows through deflector plate **(A)** which causes a swirling action. Liquids and coarse particles are forced to the bowl interior wall **(B)** by the centrifugal action of the swirling air. They are then carried down the bowl wall by the force of gravity. The baffle **(D)** separates the lower portion of the bowl into a "quiet zone" **(E)** where the removed liquid and particles collect, unaffected by the swirling air, and are therefore not reentrained into the flowing air.

Second Stage Filtration:

After liquids and large particles are removed in the first stages of filtration, the air flows through element **(C)** where smaller particles are filtered out. The filtered air then passes downstream. Collected liquids and particles in the "quiet zone" **(E)** should be drained before their level reaches a height where they would be reentrained in the flowing air. This can be accomplished by unscrewing the drain valve **(F)** slightly until the liquid begins to drain.

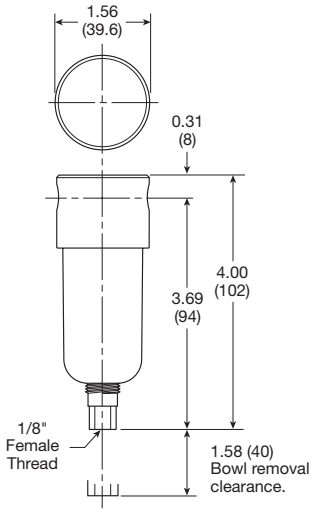

Inches (mm)

Material Specifications

Body	316 stainless steel
Bowls	316 stainless steel
Deflector	Acetal
Drain	316 stainless steel
Element holder	Acetal
Filter element	Polyethylene
Seals	Fluorocarbon

Repair and Service Kits

Auto pulse drain	**RK504SY-SS**
Manual twist drain (small, old)	**SA600Y7-1SS**
Manual twist drain (large, new)	**SAP05481**
5 micron element	**EK504VY**
20 micron element	**EK504Y**
Pipe nipple, 1/4" 316 stainless steel	**1/4 FF-SS**

Flow Charts

PF504 1/4" Filter

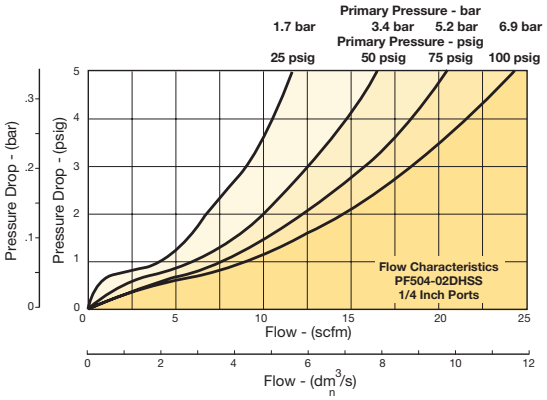

For inventory, lead times, and kit lookup, visit www.pdnplu.com

Parker Hannifin Corporation
Pneumatic Division
Richland, Michigan
www.parker.com/pneumatics

PF10 Particulate Filters – Standard

- Stainless steel construction handles most corrosive environments
- Fluorocarbon seals standard
- Meets NACE specifications MR-01-75/ISO 15156
- 1/8" female threaded drain
- 1/2" port (NPT, BSPP)



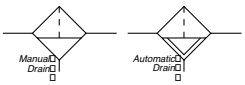

Port Size	Description	Part Number
1/2"	Twist Drain, with Sight Gauge, NPT	**PF10-04WJSS**
1/2"	Auto Float Drain, with Sight Gauge, NPT	**PF10-04WJRSS**

Operating information

Operating pressure:	
Twist drain, no sight gauge	0 to 300 psig (0 to 20.7 bar)
Twist drain, sight gauge	0 to 250 psig (0 to 17.2 bar)
Auto float drain	10 to 175 psig (0 to 12 bar)
Operating temperature:	
Twist drain, no sight gauge	0°F to 180°F (-18°C to 82°C)
Twist drain, sight gauge	0°F to 150°F (-18°C to 66°C)
Auto float drain	32°F to 150°F (0°C to 66°C)
Flow capacity†:	70 scfm (33 dm^3/s, ANR)
Bowl capacity:	4.0 oz.
Filter rating:	40 micron
Sump capacity:	1.7 oz.
Weight:	1.9 lb (0.85 kg)

Note: Air must be dry enough to avoid ice formation at temperatures below 32°F (0°C)

† scfm = Standard cubic feet per minute at 90 psig inlet and 5 psig pressure drop.

Ordering Information:

PF10 – 04 D J ☐ SS

Port Type	
NPT	–
BSPP	G

Port Size	
1/2 inch	04

Bowl Type	
Metal Bowl without Sight Gauge	D
Metal Bowl with Sight Gauge	W

Element	
J	40 micron
G	5 micron

Option	
Blank	Manual Twist Drain
R	Auto Float Drain

Material	
SS	Stainless Steel

☐ Most popular.

Operation

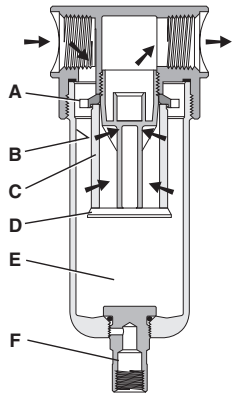

First Stage Filtration:

Air enters at inlet port and flows through deflector plate **(A)** which causes a swirling action. Liquids and coarse particles are forced to the bowl interior wall **(B)** by the centrifugal action of the swirling air. They are then carried down the bowl wall by the force of gravity. The baffle **(D)** separates the lower portion of the bowl into a "quiet zone" **(E)** where the removed liquid and particles collect, unaffected by the swirling air, and are therefore not reentrained into the flowing air.

Second Stage Filtration:

After liquids and large particles are removed in the first stages of filtration, the air flows through element **(C)** where smaller particles are filtered out. The filtered air then passes downstream. Collected liquids and particles in the "quiet zone" **(E)** should be drained before their level reaches a height where they would be reentrained in the flowing air. This can be accomplished by unscrewing the drain valve **(F)** slightly until the liquid begins to drain.

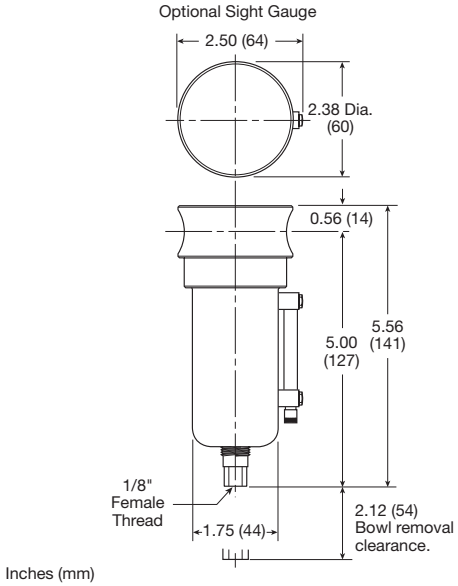

Inches (mm)

Material Specifications

Body	316 stainless steel
Bowls	316 stainless steel
Deflector	Acetal
Drain	316 stainless steel
Element holder	Acetal
Filter element	Polyethylene
Seals	Fluorocarbon
Sight gauge	Isoplast

Repair and Service Kits

Automatic float drain	**SA10MDSS**
Manual twist drain (small, old)	**SA600Y7-1SS**
Manual twist drain (large, new)	**SAP05481**
40 micron element	**EK55J**
5 micron element	**EK55G**
Pipe nipple, 1/2" 316 stainless steel	**616A28-SS**

Flow Charts

PF10 1/2" Filter

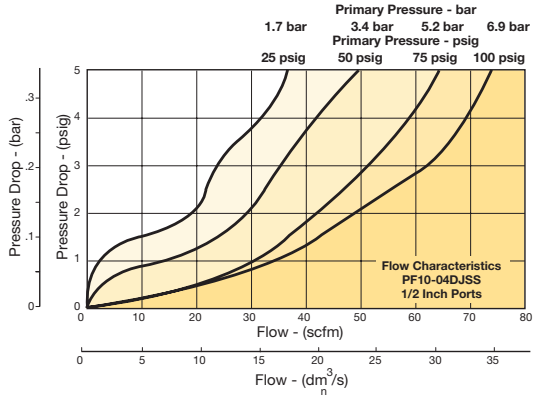

For inventory, lead times, and kit lookup, visit www.pdnplu.com

Parker Hannifin Corporation
Pneumatic Division
Richland, Michigan
www.parker.com/pneumatics

Tel: +45 63 12 83 00 | Email: ps@hymatik.com | www.hymatik.com | Hvidkaervej 27a, DK-5250 Odense SV, Denmark

PF501 Coalescing Filters – Miniature

- Stainless steel construction handles most corrosive environments
- Meets NACE specifications MR-01-75/ISO 15156
- 1/8" female threaded drain
- 1/4" port (NPT, BSPP)



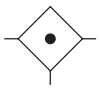

Port Size	Description	Part Number
1/4"	Twist Drain, NPT	**PF501-02DHSS**
1/4"	Auto Pulse Drain, NPT	**PF501-02DHRSS**

Operating information

Operating pressure:	
Twist drain	0 to 300 psig (0 to 20.7 bar)
Auto pulse drain	10 to 175 psig (0 to 12 bar)
Operating temperature:	
Twist drain	0°F to 180°F (-18°C to 82°C)
Auto pulse drain	32°F to 150°F (0°C to 66°C)
Flow capacity†:	16 scfm (7.6 dm^3/s, ANR)
Bowl capacity:	1.0 oz.
Filter rating:	0.01 micron
Sump capacity:	0.4 oz.
Weight:	0.6 lb (0.27 kg)

Note: Air must be dry enough to avoid ice formation at temperatures below 32°F (0°C)

† scfm = Standard cubic feet per minute at 90 psig inlet and 5 psig pressure drop.

Ordering Information:

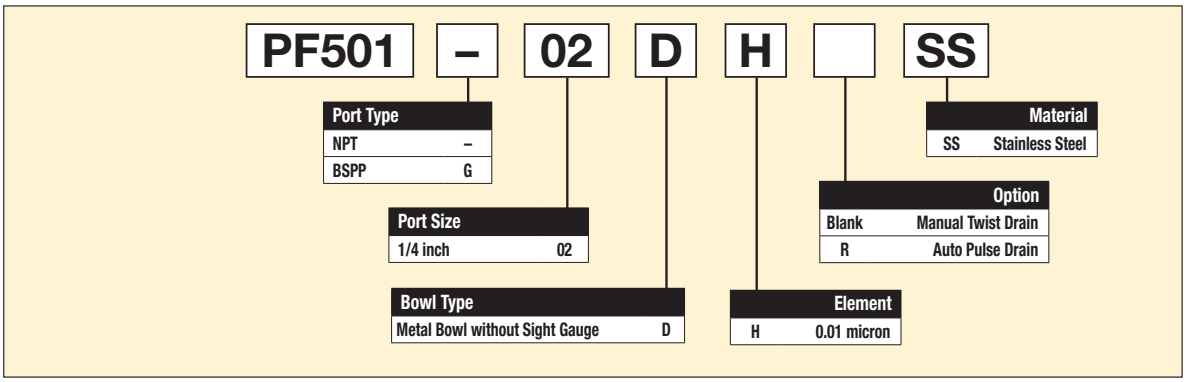

Parker Hannifin Corporation
Pneumatic Division
Richland, Michigan
www.parker.com/pneumatics

Operation

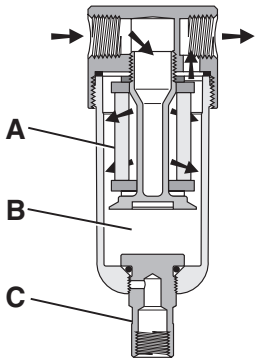

The contaminated air enters the element interior and is forced through a thick membrane **(A)** of "borosilicate" glass fibers coated with epoxy. Flow then passes through the element, and at this stage 99.97% of the sub micronic particles have been removed from the air stream. The tiny droplets coalesce together and are collected from the filter element by the outer drain layer.

The clean, filtered air now passes through and out into the pneumatic system. The air line coalescing filter removes liquid aerosols and sub-micron particulate matter.

Collected liquids and particles in the "quiet zone" **(B)** should be drained before their level reaches a height where they would be reentrained in the flowing air. This can be accomplished by unscrewing the drain valve **(C)** slightly until the liquid begins to drain.

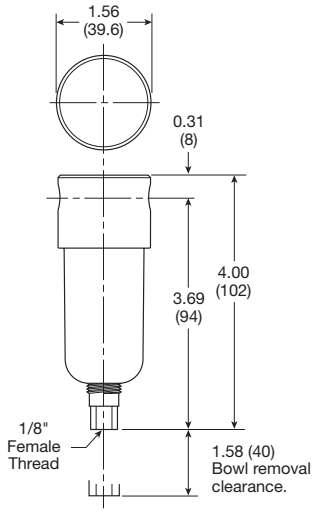

Inches (mm)

Material Specifications

Body	316 stainless steel
Bowls	316 stainless steel
Drain	316 stainless steel
Element holder	Acetal
Filter element	Borosilicate Fiber
Seals	Fluorocarbon

Repair and Service Kits

Auto pulse drain	**RK504SY-SS**
Manual twist drain (small, old)	**SA600Y7-1SS**
Manual twist drain (large, new)	**SAP05481**
0.01 micron element	**EKF501H**
Pipe nipple, 1/4" 316 stainless steel	**1/4 FF-SS**

Flow Charts

PF501 1/4" Coalescing Filter

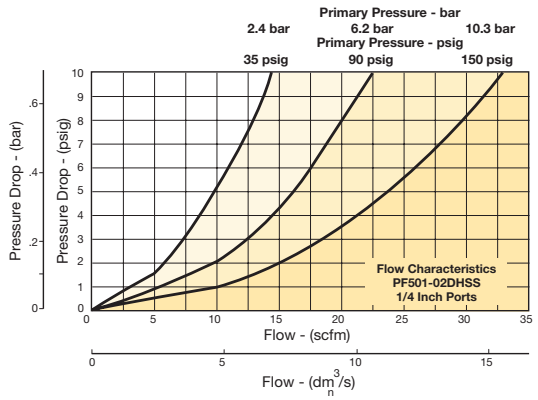

For inventory, lead times, and kit lookup, visit www.pdnplu.com

Parker Hannifin Corporation
Pneumatic Division
Richland, Michigan
www.parker.com/pneumatics

Tel: +45 63 12 83 00 | Email: ps@hymatik.com | www.hymatik.com | Hvidkaervej 27a, DK-5250 Odense SV, Denmark

PF11 Coalescing Filters – Standard

- Stainless steel construction handles most corrosive environments
- Meets NACE specifications MR-01-75/ISO 15156
- 1/8" female threaded drain
- 1/2" port (NPT, BSPP)



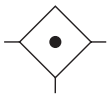

Port Size	Description	Part Number
1/2"	Twist Drain, with Sight Gauge, NPT	**PF11-04WJSS**
1/2"	Auto Float Drain, with Sight Gauge, NPT	**PF11-04WJRSS**

Operating information

Operating pressure:	
Twist drain, no sight gauge	0 to 300 psig (0 to 20.7 bar)
Twist drain, sight gauge	0 to 250 psig (0 to 17.2 bar)
Auto float drain	10 to 175 psig (0 to 12 bar)
Operating temperature:	
Twist drain, no sight gauge	0°F to 180°F (-18°C to 82°C)
Twist drain, sight gauge	0°F to 150°F (-18°C to 66°C)
Auto float drain	32°F to 150°F (0°C to 66°C)
Flow capacity†:	45 scfm (21.2 dm^3/s, ANR)
Bowl capacity:	4.0 oz.
Filter rating:	0.01 micron
Sump capacity:	1.7 oz.
Weight:	1.9 lb (0.85 kg)

Note: Air must be dry enough to avoid ice formation at temperatures below 32°F (0°C)

† scfm = Standard cubic feet per minute at 90 psig inlet and 5 psig pressure drop.

Ordering Information:

PF11 – 04 D J [ ] SS

Port Type	
NPT	–
BSPP	G

Port Size	
1/2 inch	04

Bowl Type	
Metal Bowl without Sight Gauge	D
Metal Bowl with Sight Gauge	W

Element	
J	0.01 micron

Option	
Blank	Manual Twist Drain
R	Auto Float Drain

Material	
SS	Stainless Steel

☐ Most popular.

Operation

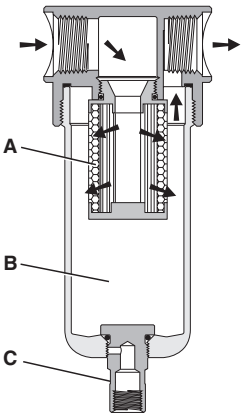

The contaminated air enters the element interior and is forced through a thick membrane **(A)** of "borosilicate" glass fibers coated with epoxy. Flow then passes through the element, and at this stage 99.9997% of the sub micronic particles have been removed from the air stream. The tiny droplets coalesce together and are collected from the filter element by the outer drain layer.

The clean, filtered air now passes through and out into the pneumatic system. The air line coalescing filter removes liquid aerosols and sub-micron particulate matter.

Collected liquids and particles in the "quiet zone" **(B)** should be drained before their level reaches a height where they would be reentrained in the flowing air. This can be accomplished by unscrewing the drain valve **(C)** slightly until the liquid begins to drain.

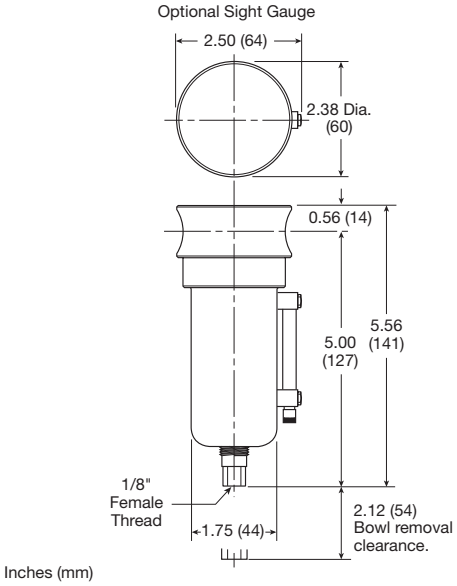

Material Specifications

Body	316 Stainless Steel
Bowls	316 Stainless Steel
Drain	316 Stainless Steel
Element holder	Acetal
Filter element	Borosilicate Fiber
Seals	Fluorocarbon
Sight gauge	Isoplast

Repair and Service Kits

Automatic float drain	**SA10MDSS**
0.01 micron element	**EKF71**
Pipe nipple, 1/2" 316 stainless steel	**616A28-SS**

Flow Charts

PF11 1/2" Coalescing Filter

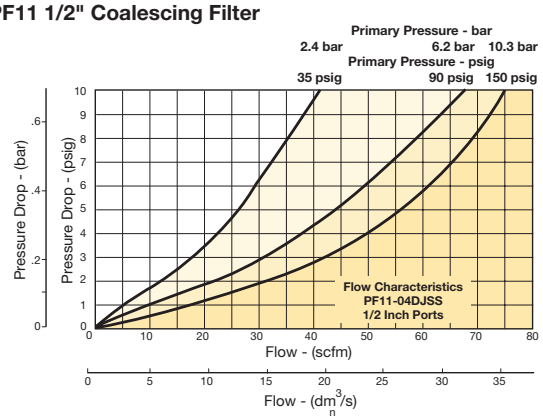

For inventory, lead times, and kit lookup, visit www.pdnplu.com

Parker Hannifin Corporation
Pneumatic Division
Richland, Michigan
www.parker.com/pneumatics

Tel: +45 63 12 83 00 | Email: ps@hymatik.com | www.hymatik.com | Hvidkaervej 27a, DK-5250 Odense SV, Denmark

PR354, PR364 Regulator – Miniature

- Stainless steel construction handles most corrosive environments
- Large diaphragm to valve area ratio for precise regulation and high flow capacity
- Meets NACE specifications MR-01-75/ISO 15156
- 1/4" port (NPT, BSPP)



PR364



PR354

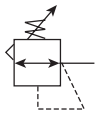

Port Size	Description	Part Number
1/4"	Standard Knob, NPT	**PR364-02CSS**
1/4"	Stainless Steel, NPT	**PR354-02CSS**

Operating information

Operating pressure:	
PR354	300 psig (20.7 bar)
PR364	300 psig (20.7 bar)
Operating temperature:	
PR354	0°F to 180°F (-18°C to 82°C)
PR364	0°F to 150°F (-18°C to 66°C)
Flow capacity†:	12 scfm (5.7 dm^3/s, ANR)
Gauge port:	1/4 inch
Operation:	Fluorocarbon diaphragm
Weight:	0.5 lb (0.23 kg)

Note: Air must be dry enough to avoid ice formation at temperatures below 32°F (0°C)

† scfm = Standard cubic feet per minute at 100 psig inlet, 75 psig no flow secondary setting and 15 psig pressure drop.

Ordering Information:

PR364 – 02 C ☐ SS

Series	
Stainless Steel	PR354
Standard Knob	PR364

Port Type	
NPT	–
BSPP	G

Port Size	
1/4 inch	02

Pressure Range	
A	0 to 25 psig (0 to 1.7 bar)
B	0 to 60 psig (0 to 4.1 bar)
C	0 to 125 psig (0 to 8.5 bar)

Options	
Blank	Relieving
K	Non-Relieving
P	Panel Mount Nut

Material	
SS	Stainless Steel

☐ Most popular.

For inventory, lead times, and kit lookup, visit www.pdnplu.com

Parker Hannifin Corporation
Pneumatic Division
Richland, Michigan
www.parker.com/pneumatics

Operation

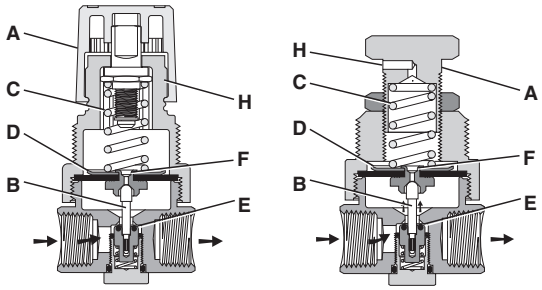

With the adjusting knob **(A)** turned fully counter-clockwise (no spring load), and pressure supplied to the regulator inlet port, the valve poppet assembly **(B)** is closed. Turning the adjusting knob clockwise applies a load to control spring **(C)**. This load causes the diaphragm **(D)** and the valve poppet assembly **(B)** to move downward allowing flow across the seat area **(E)** created between the poppet assembly and the seat. Pressure in the downstream line is sensed below the diaphragm **(D)** and offsets the load of spring **(C)**. As downstream pressure rises, poppet assembly **(B)** and diaphragm **(D)** move upward until the area **(E)** is closed and the load of the spring **(C)** and pressure under diaphragm **(D)** are in balance. A reduced outlet pressure has now been obtained, depending on spring load. Creating a demand downstream, such as opening a valve, results in a reduced pressure under the diaphragm **(D)**. The load of control spring **(C)** now causes the poppet assembly to move downward opening seat area **(E)** allowing air to flow to meet the downstream demand. The flow of downstream air is metered by the amount of opening **(E)**.

Should downstream pressure exceed the desired regulated pressure, the excess pressure will cause the diaphragm **(D)** to move upward against control spring **(C)**, open vent hole **(F)**, and vent the excess pressure to atmosphere through the hole in the bonnet **(H)**. (This occurs in the relieving type regulator only.)

PR354

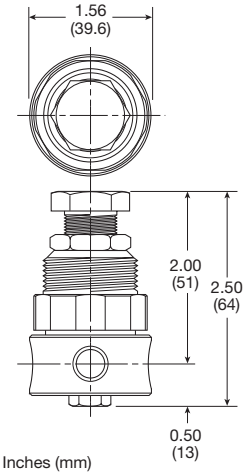

PR364

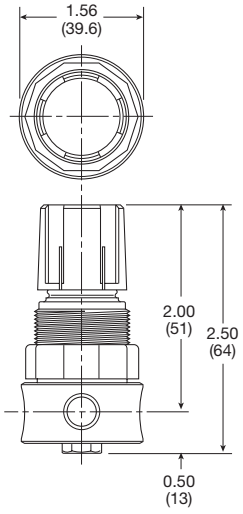

Inches (mm)

Material Specifications

Adjustment mechanism / springs	316 stainless steel
Adjusting knob (PR354)	316 Stainless Steel
Adjusting knob (PR364)	Polypropylene
Body	316 stainless steel
Bonnet (PR354)	316 stainless steel
Bonnet (PR364)	Acetal
Bottom plug	316 stainless steel
Poppet	316 stainless steel
Seals	Fluorocarbon

Repair and Service Kits

PR354 bonnet kit	**CKR354YSS**
PR364 bonnet kit (knob included)	**CKR364Y-1SS**
1-1/2" face, 160 psig (0 to 1100 kPa), gauge (stainless)	**K4515N14160SS**
Panel mount bracket (Stainless)	**161X57-SS**
Panel mount nut, stainless	**R05X51-SS**
Panel mount nut, plastic	**R05X51-P**
Pipe nipple, 1/4" 316 stainless steel	**1/4 FF-SS**
Relieving	**RKR364YSS**
Non-relieving	**RKR364KYSS**
0-25 psig spring	**SPR-375-2-SS**
0-60 psig spring	**SPR-376-1-SS**
0-125 psig spring	**SPR-377-1-SS**

Flow Charts

PR354, PR364 1/4" Regulator

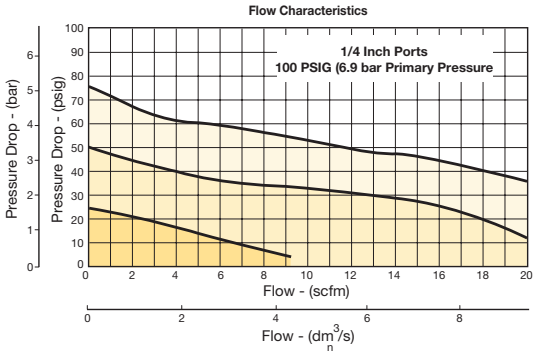

⚠ WARNING

Product rupture can cause serious injury.
Do not connect regulator to bottled gas.
Do not exceed Maximum primary pressure rating.

CAUTION:

REGULATOR PRESSURE ADJUSTMENT – The working range of knob adjustment is designed to permit outlet pressures within their full range. Pressure adjustment beyond this range is also possible because the knob is not a limiting device. This is a common characteristic of most industrial regulators, and limiting devices may be obtained only by special design. For best performance, regulated pressure should always be set by increasing the pressure up to the desired setting.

For inventory, lead times, and kit lookup, visit www.pdnplu.com

Parker Hannifin Corporation
Pneumatic Division
Richland, Michigan
www.parker.com/pneumatics

Tel: +45 63 12 83 00 | Email: ps@hymatik.com | www.hymatik.com | Hvidkaervej 27a, DK-5250 Odense SV, Denmark

PR10, PR11 Regulator – Standard

- Stainless steel construction handles most corrosive environments
- Large diaphragm to valve area ratio for precise regulation and high flow capacity
- Meets NACE specifications MR-01-75/ISO 15156
- Low temperature version available
- 1/2" port (NPT, BSPP)

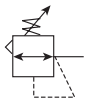



PR11



PR10

Port Size	Description	Part Number
1/2"	Standard Knob, NPT	**PR10-04CSS**
1/2"	Stainless Steel T-Handle, NPT	**PR11-04CSS**

Operating information

Operating pressure:	
PR10	300 psig (20.7 bar)
PR11	300 psig (20.7 bar)
Operating temperature:	
PR10	0°F to 150°F (-18°C to 66°C)
PR11	0°F to 180°F (-18°C to 82°C)
Option "L" minimum	-40°F (-40°C)
Flow capacity†:	80 scfm (37.8 dm^3/s, ANR)
Gauge port:	1/4 inch
Operation:	Fluorocarbon diaphragm
Weight:	1.79 lb (0.81 kg)

Note: Air must be dry enough to avoid ice formation at temperatures below 32°F (0°C)

† scfm = Standard cubic feet per minute at 100 psig inlet, 75 psig no flow secondary setting and 15 psig pressure drop.

Ordering Information:

PR10 – 04 C ☐ SS

Series	
Stainless Knob	PR10
Standard Steel, T-Handle	PR11

Port Type	
NPT	–
BSPP	G

Port Size	
1/2 inch	04

Pressure Range	
B	0 to 60 psig (0 to 4.1 bar)
C	0 to 125 psig (0 to 8.5 bar)
D	0 to 250 psig (0 to 17.2 bar)

Options	
Blank	Relieving
K	Non-Relieving
L	Low Temp.
P	Panel Mount Nut

Material	
SS	Stainless Steel

☐ Most popular.

For inventory, lead times, and kit lookup, visit www.pdnplu.com

Parker Hannifin Corporation
Pneumatic Division
Richland, Michigan
www.parker.com/pneumatics

Tel: +45 63 12 83 00 | Email: ps@hymatik.com | www.hymatik.com | Hvidkaervej 27a, DK-5250 Odense SV, Denmark

Operation

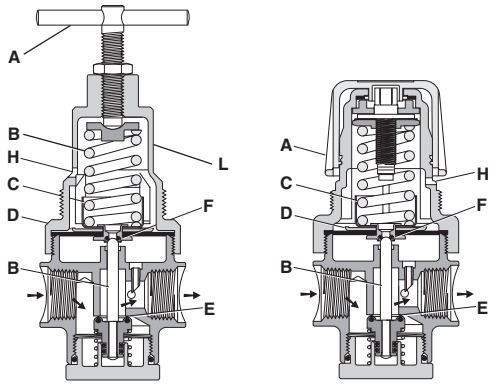

With the adjusting knob / T-Handle **(A)** turned fully counter-clockwise (no spring load), and pressure supplied to the regulator inlet port, the valve poppet assembly **(B)** is closed. Turning the adjusting knob clockwise applies a load to control spring **(C)**. This load causes the diaphragm **(D)** and the valve poppet assembly **(B)** to move downward allowing flow across the seat area **(E)** created between the poppet assembly and the seat. Pressure in the downstream line is sensed below the diaphragm **(D)** and offsets the load of spring **(C)**. As downstream pressure rises, poppet assembly **(B)** and diaphragm **(D)** move upward until the area **(E)** is closed and the load of the spring **(C)** and pressure under diaphragm **(D)** are in balance. A reduced outlet pressure has now been obtained, depending on spring load. Creating a demand downstream, such as opening a valve, results in a reduced pressure under the diaphragm **(D)**. The load of control spring **(C)** now causes the poppet assembly to move downward opening seat area **(E)** allowing air to flow to meet the downstream demand. The flow of downstream air is metered by the amount of opening **(E)**.

Should downstream pressure exceed the desired regulated pressure, the excess pressure will cause the diaphragm **(D)** to move upward against control spring **(C)**, open vent hole **(F)**, and vent the excess pressure to atmosphere through the hole in the bonnet **(H)**. (This occurs in the relieving type regulator only.)

PR10

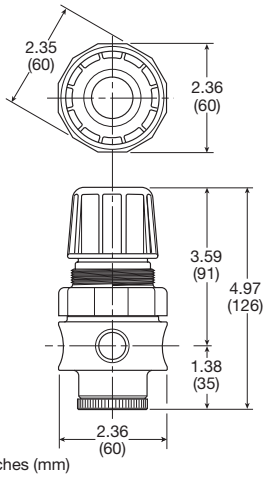

PR11

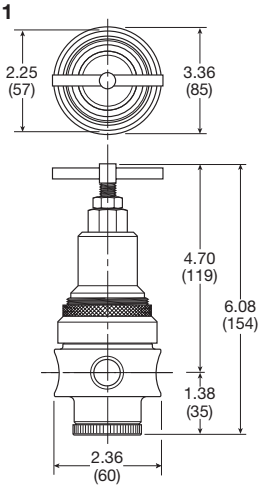

Inches (mm)

Material Specifications

Adjustment mechanism / springs	316 stainless steel
Body	316 stainless steel
Bonnet / tee handle (PR11)	316 stainless steel
Bonnet / knob (PR10)	Acetal
Bottom plug	316 stainless steel
Poppet	316 stainless steel
Seals	Fluorocarbon

Repair and Service Kits

PR10 bonnet kit (knob included)	**CKR10YSS**
PR11 bonnet kit	**CKR11YSS**
2" Face 160 psig (0 to 1100 kPa), gauge (stainless)	**K4520N14160SS**
Panel mount bracket (stainless)	**R10Y57-SS**
Panel mount nut, stainless	**R10X51-SS**
Panel mount nut, plastic	**R10X51-P**
Pipe nipple, 1/2" 316 stainless steel	**616A28-SS**
Relieving	**RKR10YSS**
Non-relieving	**RKR10KYSS**
0-60 psig spring	**SPR-388-1-SS**
0-125 psig spring	**SPR-389-1-SS**
0-250 psig spring	**SPR-390-1-SS**

Flow Charts

PR10 1/2" Regulator

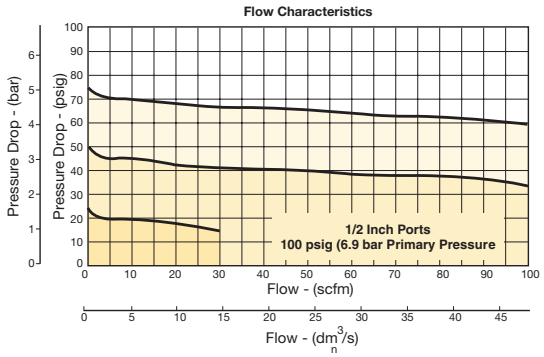

⚠ WARNING

Product rupture can cause serious injury.
Do not connect regulator to bottled gas.
Do not exceed Maximum primary pressure rating.

CAUTION:

REGULATOR PRESSURE ADJUSTMENT – The working range of knob adjustment is designed to permit outlet pressures within their full range. Pressure adjustment beyond this range is also possible because the knob is not a limiting device. This is a common characteristic of most industrial regulators, and limiting devices may be obtained only by special design. For best performance, regulated pressure should always be set by increasing the pressure up to the desired setting.

For inventory, lead times, and kit lookup, visit www.pdnplu.com

Parker Hannifin Corporation
Pneumatic Division
Richland, Michigan
www.parker.com/pneumatics

Tel: +45 63 12 83 00 | Email: ps@hymatik.com | www.hymatik.com | Hvidkaervej 27a, DK-5250 Odense SV, Denmark

PB548, PB558 Filter / Regulator – Miniature

- Stainless steel construction handles most corrosive environments
- Large diaphragm to valve area ratio for precise regulation and high flow capacity
- 1/8" female threaded drain
- Meets NACE specifications MR-01-75/ISO 15156
- 1/4" port (NPT, BSPP)

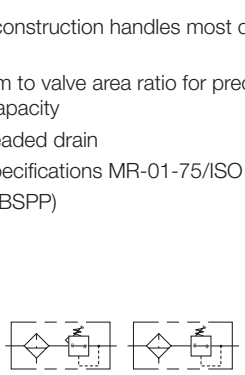

PB548 PB558

Port Size	Description	Part Number
1/4"	Standard Knob, NPT	**PB548-02DHCSS**
1/4"	Stainless Steel, NPT	**PB558-02DHCSS**

Operating information

Operating pressure:	
PB548	300 psig (20.7 bar)
PB558	300 psig (20.7 bar)
Auto pulse drain	10 to 175 psig (0 to 12 bar)
Operating temperature:	
PB548	0°F to 150°F (-18°C to 66°C)
PB558	0°F to 180°F (-18°C to 82°C)
Auto pulse drain	32°F to 150°F (0°C to 66°C)
Flow capacity†:	12 scfm (5.7 dm^3/s, ANR)
Bowl capacity:	1.0 oz.
Filter rating:	20 micron
Sump capacity:	0.4 oz.
Gauge port:	1/4 inch
Operation:	Fluorocarbon diaphragm
Weight:	0.6 lb (0.27 kg)

Note: Air must be dry enough to avoid ice formation at temperatures below 32°F (0°C)

† scfm = Standard cubic feet per minute at 100 psig inlet, 75 psig no flow secondary setting and 15 psig pressure drop.

Ordering Information:

PB548 – 02 D H C ☐ SS

Series	
Standard Knob	PB548
Stainless Steel	PB558

Port Type	
NPT	–
BSPP	G

Port Size	
1/4 inch	02

Bowl Type	
Metal Bowl without Sight Gauge	D

Element	
20 micron	H
5 micron	G

Reduced Pressure Range	
A	0 to 25 psig (0 to 1.7 bar)
B	0 to 60 psig (0 to 4.1 bar)
C	0 to 125 psig (0 to 8.5 bar)

Options	
Blank	Relieving
K	Non-Relieving
R	Auto Pulse Drain
P	Panel Mount Nut

Material	
SS	Stainless Steel

☐ Most popular.

For inventory, lead times, and kit lookup, visit www.pdnplu.com

Parker Hannifin Corporation
Pneumatic Division
Richland, Michigan
www.parker.com/pneumatics

Tel: +45 63 12 83 00 | Email: ps@hymatik.com | www.hymatik.com | Hvidkaervej 27a, DK-5250 Odense SV, Denmark

Operation

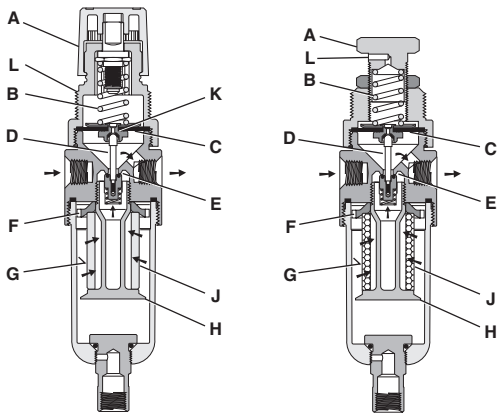

Turning the adjusting knob **(A)** clockwise applies a load to control spring **(B)** which forces diaphragm **(C)** and valve poppet assembly **(D)** to move downward allowing filtered air to flow through the seat area **(E)** created between the poppet assembly and the seat. **"First stage filtration"**. Air pressure supplied to the inlet port is directed through deflector plate **(F)** causing a swirling centrifugal action forcing liquids and coarse particles to the inner bowl wall **(G)** and down below the lower baffle **(H)** to the quiet zone. After liquids and large particles are removed in the first stage of filtration **"second stage filtration"** occurs as air flows through element **(J)** where smaller particles are filtered out and retained. The air flow now passes through seat area **(E)** to the outlet port of the unit. Pressure in the downstream line is sensed below the diaphragm **(C)** and offsets the load of spring **(B)**. When downstream pressure reaches the set-point, poppet valve assembly **(D)** and diaphragm **(C)** move upward closing seat area **(E)**. Should downstream pressure exceed the desired regulated pressure, the excess pressure will cause the diaphragm **(C)** to move upward opening vent hole **(K)** venting the excess pressure to atmosphere through the hole in the bonnet **(L)**. (This occurs in the standard relieving type filter/regulators only.)

PB548

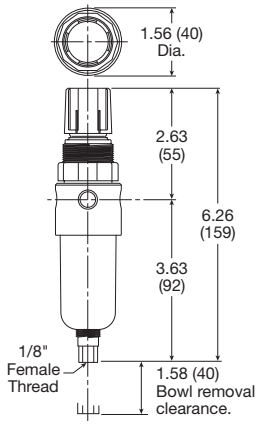

PB558

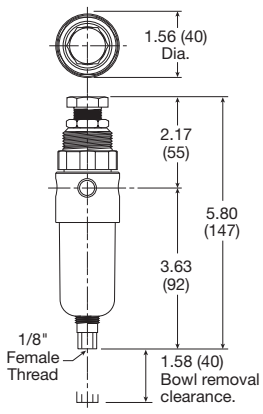

Inches (mm)

Material Specifications

Adjustment mechanism / springs	316 stainless steel
Body	316 Stainless steel
Bonnet (PB548)	Acetal
Bonnet (PB558)	316 stainless steel
Bottom plug	316 stainless steel
Knob (PB548)	Polypropylene
Knob (PB558)	316 stainless steel
Poppet	316 stainless steel
Seals	Fluorocarbon

Repair and Service Kits

PB558 bonnet kit (knob included)	**CKR354YSS**
PB548 bonnet kit (knob included)	**CKR364Y-1SS**
Automatic pulse drain	**RK504SY-SS**
Manual twist drain (small, old)	**SA600Y7-1SS**
Manual twist drain (large, new)	**SAP05481**
5 micron element	**EK504VY**
20 micron element	**EK504Y**
1-1/2" face 160 psig (0 to 1100 kPa), gauge (stainless)	**K4515N14160SS**
Panel mount bracket (stainless)	**161X57-SS**
Panel mount nut, stainless	**R05X51-SS**
Panel mount nut, plastic	**R05X51-P**
Pipe nipple, 1/4" 316 stainless steel	**1/4 FF-SS**
Relieving	**RK549YSS**
Non-relieving	**RK548YSS**
0-25 psig spring	**SPR-375-2-SS**
0-60 psig spring	**SPR-376-1-SS**
0-125 psig spring	**SPR-377-1-SS**

Flow Charts

PB548, PB558 1/4" Filter / Regulator

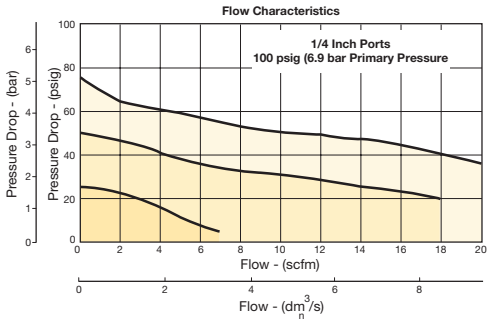

⚠ WARNING

Product rupture can cause serious injury.
Do not connect regulator to bottled gas.
Do not exceed Maximum primary pressure rating.

CAUTION:

REGULATOR PRESSURE ADJUSTMENT – The working range of knob adjustment is designed to permit outlet pressures within their full range. Pressure adjustment beyond this range is also possible because the knob is not a limiting device. This is a common characteristic of most industrial regulators, and limiting devices may be obtained only by special design. For best performance, regulated pressure should always be set by increasing the pressure up to the desired setting.

For inventory, lead times, and kit lookup, visit www.pdnplu.com

Parker Hannifin Corporation
Pneumatic Division
Richland, Michigan
www.parker.com/pneumatics

PB11, PB12 Filter / Regulator – Standard

- Stainless steel construction handles most corrosive environments
- Large diaphragm to valve area ratio for precise regulation and high flow capacity
- 1/8" female threaded drain
- Meets NACE specifications MR-01-75/ISO-15156
- Low temperature version available
- 1/2" port (NPT, BSPP)



PB11 **PB12**

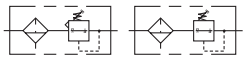

Port Size	Description	Part Number
With Sight Gauge, NPT		
1/2"	Standard Knob, Twist Drain	**PB11-04WJCSS**
1/2"	Standard Knob, Auto Float Drain	**PB11-04WJCRSS**
1/2"	Stainless Steel T-Handle, Twist Drain	**PB12-04WJCSS**
1/2"	Stainless Steel T-Handle, Auto Float Drain	**PB12-04WJCRSS**

Operating information

Operating pressure:	
PB11, PB12	300 psig (20.7 bar)
Auto float drain	15 to 175 psig (1 to 12 bar)
Operating temperature:	
PB11	0°F to 150°F (-18°C to 66°C)
PB12, no sight gauge	0°F to 180°F (-18°C to 82°C)
PB12, sight gauge	0°F to 150°F (-18°C to 66°C)
Auto float drain	32°F to 150°F (0°C to 66°C)
Flow capacity†:	72 scfm (34 dm^3/s, ANR)
Bowl capacity:	4.0 oz.
Filter rating:	40 micron
Sump capacity:	1.7 oz.
Gauge port:	1/4 inch
Operation:	Fluorocarbon diaphragm
Weight:	2.42 lb (1.09 kg)

Note: Air must be dry enough to avoid ice formation at temperatures below 32°F (0°C)

† scfm = Standard cubic feet per minute at 100 psig inlet, 75 psig no flow secondary setting and 15 psig pressure drop.

Ordering Information:

PB11 – 04 W J C ☐ SS

Series	
Standard Knob	PB11
Stainless Steel	PB12

Port Type	
NPT	–
BSPP	G

Port Size	
1/2 inch	04

Bowl Type	
Metal Bowl without Sight Gauge	D
Metal Bowl with Sight Gauge	W

Element	
40 micron	J
5 micron	G

Reduced Pressure Range	
B	0 to 60 psig (0 to 4.1 bar)
C	0 to 125 psig (0 to 8.5 bar)
D	0 to 250 psig (0 to 17.2 bar)

Options	
Blank	Relieving
K	Non-Relieving
P	Panel Mount Nut
R	Auto Float Drain
L*	Low Temp.

* Manual drain and without sight gauge only.

Material	
SS	Stainless Steel

☐ Most popular.

For inventory, lead times, and kit lookup, visit www.pdnplu.com

Parker Hannifin Corporation
Pneumatic Division
Richland, Michigan
www.parker.com/pneumatics

Tel: +45 63 12 83 00 | Email: ps@hymatik.com | www.hymatik.com | Hvidkaervej 27a, DK-5250 Odense SV, Denmark

Operation

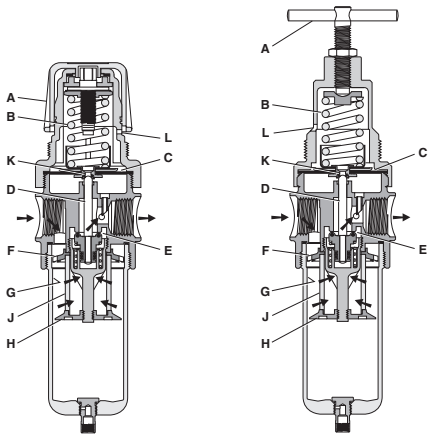

Turning the adjusting knob / T-Handle **(A)** clockwise applies a load to control spring **(B)** which forces diaphragm **(C)** and valve poppet assembly **(D)** to move downward allowing filtered air to flow through the seat area **(E)** created between the poppet assembly and the seat. **"First stage filtration"**. Air pressure supplied to the inlet port is directed through deflector plate **(F)** causing a swirling centrifugal action forcing liquids and coarse particles to the inner bowl wall **(G)** and down below the lower baffle (H) to the quiet zone. After liquids and large particles are removed in the first stage of filtration **"second stage filtration"** occurs as air flows through element **(J)** where smaller particles are filtered out and retained. The air flow now passes through seat area **(E)** to the outlet port of the unit. Pressure in the downstream line is sensed below the diaphragm **(C)** and offsets the load of spring **(B)**. When downstream pressure reaches the set-point, poppet valve assembly **(D)** and diaphragm **(C)** move upward closing seat area **(E)**. Should downstream pressure exceed the desired regulated pressure, the excess pressure will cause the diaphragm **(C)** to move upward opening vent hole **(K)** venting the excess pressure to atmosphere through the hole in the bonnet **(L)**. (This occurs in the standard relieving type filter/regulators only.)

PB11

Inches (mm)

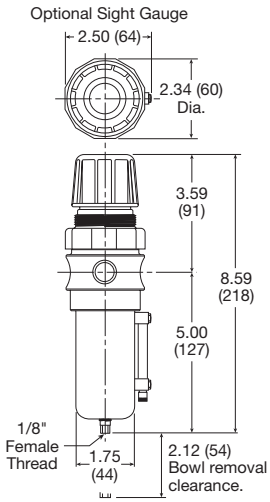

PB12

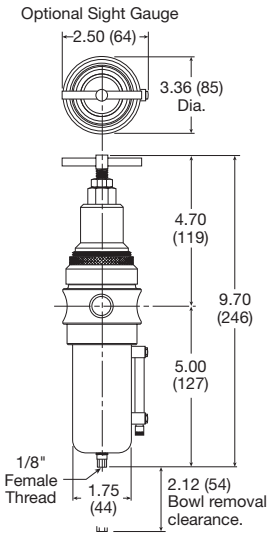

Material Specifications

Adjustment mechanism / springs	316 stainless steel
Body	316 stainless steel
Bonnet / knob (PB11)	Acetal
Bonnet / tee handle (PB12)	316 stainless steel
Bottom plug	316 stainless steel
Poppet	316 stainless steel
Seals	Fluorocarbon
Sight gauge	Isoplast

Repair and Service Kits

PB11 bonnet kit (knob included)	**CKR10YSS**
PB12 bonnet kit	**CKR11YSS**
Auto float drain	**SA10MDSS**
Manual twist drain (small, old)	**SA600Y7-1SS**
Manual twist drain (large, new)	**SAP05481**
40 micron element	**EKF10Y**
5 micron element	**EKF10VY**
2" face 160 psig (0 to 1100 kPa), gauge (stainless)	**K4520N14160SS**
Panel mount bracket (stainless)	**R10Y57-SS**
Panel mount nut, stainless	**R10X51-SS**
Panel mount nut, plastic	**R10X51-P**
Pipe nipple, 1/2" 316 stainless steel	**616A28-SS**
Relieving	**RKR10YSS**
Non-relieving	**RKR10KYSS**
0-60 psig spring	**SPR-388-1-SS**
0-125 psig spring	**SPR-389-1-SS**
0-250 psig spring	**SPR-390-1-SS**

Flow Charts

PB11 1/2" Filter / Regulator

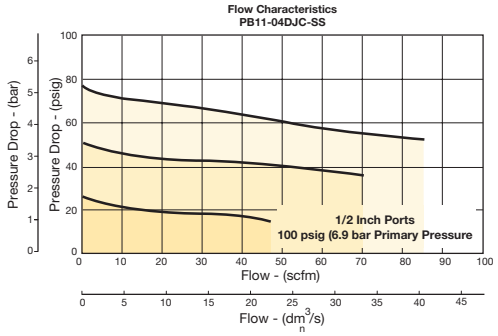

⚠ WARNING

Product rupture can cause serious injury.
Do not connect regulator to bottled gas.
Do not exceed Maximum primary pressure rating.

CAUTION:

REGULATOR PRESSURE ADJUSTMENT – The working range of knob adjustment is designed to permit outlet pressures within their full range. Pressure adjustment beyond this range is also possible because the knob is not a limiting device. This is a common characteristic of most industrial regulators, and limiting devices may be obtained only by special design. For best performance, regulated pressure should always be set by increasing the pressure up to the desired setting.

For inventory, lead times, and kit lookup, visit www.pdnplu.com

Parker Hannifin Corporation
Pneumatic Division
Richland, Michigan
www.parker.com/pneumatics

Tel: +45 63 12 83 00 | Email: ps@hymatik.com | www.hymatik.com | Hvidkaervej 27a, DK-5250 Odense SV, Denmark

PL10 Lubricators – Standard

- Stainless steel construction handles most corrosive environments
- 1/8" female threaded drain
- Fillable under pressure
- Meets NACE specifications MR-01-75/ISO 15156
- 1/2" port (NPT, BSPP)





Port Size	Description	Part Number
1/2"	Twist Drain, with Sight Gauge, NPT	**PL10-04WSS**
1/2"	Twist Drain, without Sight Gauge, NPT	**PL10-04DSS**

Operating information

Operating pressure:	
Metal bowl, no sight gauge	0 to 300 psig (0 to 20.7 bar)
Metal bowl, sight gauge	0 to 250 psig (0 to 17.2 bar)
Operating temperature:	
Metal bowl, no sight gauge	0°F to 150°F (-18°C to 66°C)
Metal bowl, sight gauge	0°F to 150°F (-18°C to 66°C)
Flow capacity†:	100 scfm (47.2 dm^3/s, ANR)
Bowl capacity:	4.0 oz.
Weight:	1.9 lb (0.85 kg)

Note: Air must be dry enough to avoid ice formation at temperatures below 32°F (0°C)

† scfm = Standard cubic feet per minute at 90 psig inlet and 5 psig pressure drop.

Ordering Information:

PL10 – 04 W SS

Port Type	
NPT	–
BSPP	G

Port Size	
1/2 inch	04

Bowl Type	
D	Metal Bowl without Sight Gauge
W	Metal Bowl with Sight Gauge

Material	
SS	Stainless Steel

☐ Most popular.

For inventory, lead times, and kit lookup, visit www.pdnplu.com

Parker Hannifin Corporation
Pneumatic Division
Richland, Michigan
www.parker.com/pneumatics

Tel: +45 63 12 83 00 | Email: ps@hymatik.com | www.hymatik.com | Hvidkaervej 27a, DK-5250 Odense SV, Denmark

Operation

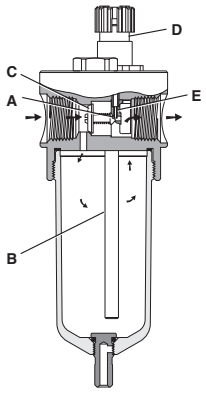

Air flowing through the unit goes through two paths. At low flow rates the majority of the air flows through the Venturi section **(A)**. The rest of the air opens the check valve **(C)**. The velocity of the air flowing through the Venturi section **(A)** creates a pressure drop. This lower pressure allows the oil to be forced from the reservoir through the pickup tube **(B)** and travels up to the metering screw **(D)**. The rate of oil delivery is then controlled by adjusting the metering screw **(D)**. Oil flows past the metering screw **(D)** and forms a drop in the nozzle tube **(E)**. As the oil drops through the dome **(F)** and back into the Venturi section **(A)**, it is broken up into fine particles. It is then mixed with the air flowing past the check valve **(C)** and is carried downstream. As the air flow increases the check valve **(C)** will open more fully. This additional flow will assure that the oil delivery rate will increase linearly with the increase of air flow.

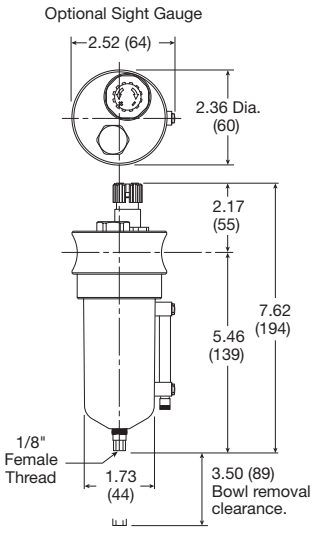

Inches (mm)

Material Specifications

Body	316 stainless steel
Bowl	316 stainless steel
Dip tube	316 stainless steel
Drain	316 stainless steel
Fill plug	316 stainless steel
Seals	Fluorocarbon
Sight dome	Nylon
Sight gauge	Isoplast

Repair and Service Kits

Manual twist drain (small, old)	**SA600Y7-1SS**
Manual twist drain (large, new)	**SAP05481**
Pipe nipple, 1/2" 316 stainless steel	**616A28-SS**
Sight dome kit, (old)	**RKL10SS**
Sight dome kit, (new)	**PS740N**

Flow Charts

PL10 1/2" Lubricator

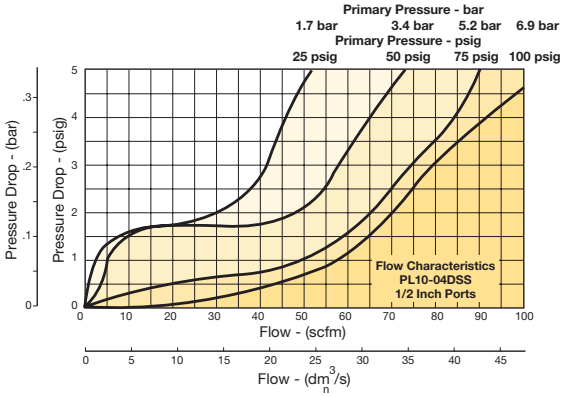

For inventory, lead times, and kit lookup, visit www.pdnplu.com

Parker Hannifin Corporation
Pneumatic Division
Richland, Michigan
www.parker.com/pneumatics

Tel: +45 63 12 83 00 | Email: ps@hymatik.com | www.hymatik.com | Hvidkaervej 27a, DK-5250 Odense SV, Denmark

Parker Hannifin Corporation
Pneumatic Division
Richland, Michigan
www.parker.com/pneumatics

Tel: +45 63 12 83 00 | Email: ps@hymatik.com | www.hymatik.com | Hvidkaervej 27a, DK-5250 Odense SV, Denmark



Air Preparation Products
P3N Series

P3NF Particulate Filters	G2-G3
P3NF Coalescing Filters	G4-G5
P3NR Regulators	G6-G7
P3NR Pilot Controlled Regulators	G8-G9
P3NE Filter / Regulators	G10-G11
P3NL Lubricators	G12-G13
P3NC Modular Combinations	G14-G15

Tel: +45 63 12 83 00 | Email: ps@hymatik.com | www.hymatik.com | Hvidkaervej 27a, DK-5250 Odense SV, Denmark

P3NF Particulate Filters – Hi-Flow

- Port blocks (PB) available to provide 1-1/2" port extension to 1" ported bodies
- Excellent water removal efficiency
- Metal bowl with sight gauge
- Large filter element surface guarantees low pressure drop and increased element life
- Twist drain as standard, optional auto float drain
- 3/4", 1", 1-1/2" port, NPT & BSPP

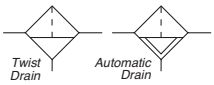



Port Size	Description	Part Number
3/4"	Metal Bowl, Sight Gauge, Twist Drain	**P3NFA96GSM**
3/4"	Metal Bowl, Sight Gauge, Auto Float Drain	**P3NFA96GSA**
1"	Metal Bowl, Sight Gauge, Twist Drain	**P3NFA98GSM**
1"	Metal Bowl, Sight Gauge, Auto Float Drain	**P3NFA98GSA**
1-1/2" #	Metal Bowl, Sight Gauge, Twist Drain	**P3NFA9PGSM**
1-1/2" #	Metal Bowl, Sight Gauge, Auto Float Drain	**P3NFA9PGSA**

1" port body with 1-1/2" port block.

Operating information

Supply pressure (max):		0 to 250 psig (0 to 17.2 bar)
Operating temperature:		32°F to 175°F (0°C to 80°C)
Flow capacity†:		
High flow	3/4"	270 scfm (127.4 dm^3/s, ANR)
	1"	300 scfm (141.6 dm^3/s, ANR)
	1-1/2"	300 scfm (141.6 dm^3/s, ANR)
Bowl capacity:		18.0 oz.
Sump capacity:		6.8 oz.
Weight:	3/4", 1"	3.5 lb (1.6 kg)
	1-1/2" #	4.6 lb (2.1 kg)

† scfm = Standard cubic feet per minute at 90 psig inlet and 5 psig pressure drop, with 40 micron element.

1" port body with 1-1/2 port block

Ordering Information:

P3N F A 9 8 G S M

Engineering Level	
Current	A

Port Type	
G Thread (BSPP) Female	1*
NPT Female	9

* 3/4 & 1 inch meets ISO 1179-1 standard.

Port Size	
3/4" (w/o port blocks)	6
1" (w/o port blocks)	8
1-1/2" Port Blocks (w/ 1" ported body)	P

Element	
G	40 micron

Bowl	
S	Metal Bowl with Sight Gauge

Drain	
M	Twist Drain
A	Auto Float Drain

Note: BSPP ported units supplied using NPT ported bodies and BSPP port block kits.

☐ Most popular.

For inventory, lead times, and kit lookup, visit www.pdnplu.com

Parker Hannifin Corporation
Pneumatic Division
Richland, Michigan
www.parker.com/pneumatics

Tel: +45 63 12 83 00 | Email: ps@hymatik.com | www.hymatik.com | Hvidkaervej 27a, DK-5250 Odense SV, Denmark

Material Specifications

Body, bowl	Aluminum
Deflector	Plastic
Drain	Plastic
Element	Plastic
Adsorber (optional)	Activated charcoal
Seals	Nitrile
Sight gauge	Polyamide (nylon)

Repair and Service Kits

Metal bowl / sight gauge / auto float drain	**P3NKA00BSA**
Metal bowl / sight gauge / twist drain	**P3NKA00BSM**
Bowl latch kit	**C11A33**
DPI replacement kit	**PS781P**
Automatic float drain	**PS506P**
Twist drain	**PS512P**
40 micron element	**P3NKA00ESG**
5 micron element	**P3NKA00ESE**
Adsorber element	**P3NKA00ESA**
Mounting bracket kit*	**P3NKA00MW**
Sight gauge kit	**P3NKA00PE**

* If 1-1/2 BSPP E02 fittings are required, use P3NKA0BMW.

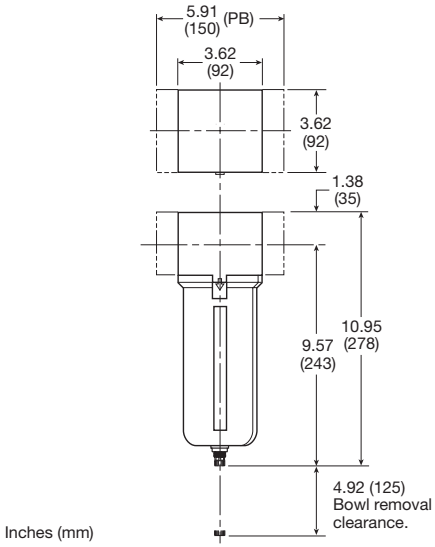

Flow Charts

P3NF 3/4" Particulate Filter

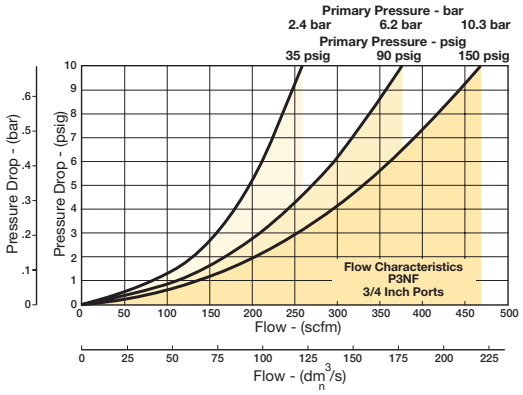

P3NF 1" & 1-1/2" Particulate Filter

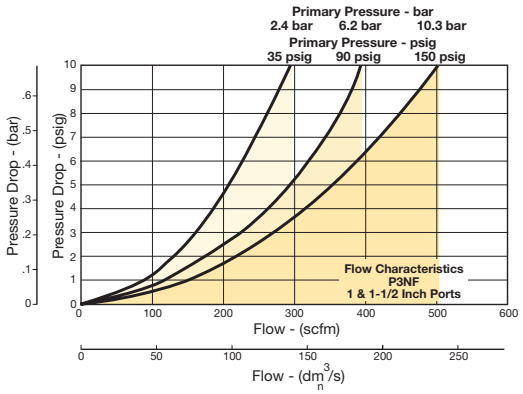

Parker Hannifin Corporation
Pneumatic Division
Richland, Michigan
www.parker.com/pneumatics

P3NF Coalescing Filters – Hi-Flow

- Port blocks (PB) available to provide 1-1/2" port extension to 1" ported bodies
- Metal bowl with sight gauge
- Large filter element surface guarantees low pressure drop and increased element life
- Twist Drain as standard, optional automatic float drain
- 3/4", 1", 1-1/2" # ports (NPT, BSPP)

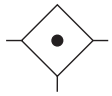



Port Size	Description	Part Number
3/4"	Metal Bowl, Sight Gauge, Twist Drain	**P3NFA96DSM**
3/4"	Metal Bowl, Sight Gauge, Auto Float Drain	**P3NFA96DSA**
1"	Metal Bowl, Sight Gauge, Twist Drain	**P3NFA98DSM**
1"	Metal Bowl, Sight Gauge, Auto Float Drain	**P3NFA98DSA**
1-1/2" #	Metal Bowl, Sight Gauge, Twist Drain	**P3NFA9PDSM**
1-1/2" #	Metal Bowl, Sight Gauge, Auto Float Drain	**P3NFA9PDSA**

Standard part numbers shown bold, with Grade 6 Elements. For other models refer to ordering information below.
1" port body with 1-1/2" port block.

Operating information

Supply pressure (max):		0 to 250 psig (0 to 17.2 bar)
Auto float drain		15 to 250 psig (1.0 to 17.2 bar)
Operating temperature:		32°F to 175°F (0°C to 80°C)
Flow capacity†:		
High flow	3/4"	130 scfm (61 dm³/s, ANR)
	1"	140 scfm (66 dm³/s, ANR)
	1-1/2"	140 scfm (66 dm³/s, ANR)
Bowl capacity:		18.0 oz.
Sump capacity:		6.8 oz.
Weight:	3/4", 1"	3.5 lb (1.6 kg)
	1-1/2" #	4.6 lb (2.1 kg)

† scfm = Standard cubic feet per minute at 90 psig inlet and 5 psig pressure drop

1" port body with 1-1/2 port block

Ordering Information:

P3N F A 9 8 D S M

Engineering Level	
Current	A

Port Type	
G Thread (BSPP) Female	1*
NPT Female	9

* 3/4 & 1 inch meets ISO 1179-1 standard.

Port Size	
3/4" (w/o port blocks)	6
1" (w/o port blocks)	8
1-1/2" Port Blocks (w/ 1" ported body)	P

Element	
D	Grade 6 with DPI Indicator

Bowl	
S	Metal Bowl with Sight Gauge

Drain	
M	Twist Drain
A	Auto Float Drain

Note: BSPP ported units supplied using NPT ported bodies and BSPP port block kits.

☐ Most popular.

For inventory, lead times, and kit lookup, visit www.pdnplu.com

Parker Hannifin Corporation
Pneumatic Division
Richland, Michigan
www.parker.com/pneumatics

Tel: +45 63 12 83 00 | Email: ps@hymatik.com | www.hymatik.com | Hvidkaervej 27a, DK-5250 Odense SV, Denmark

Material Specifications

Body, bowl	Aluminum
Deflector	Plastic
Drain	Plastic
Element	Borosilicate & felt glass fibers
Largest aerosol particle passed (Grade 6)	0.01 micron
Largest solid particle passed (Grade 6)	0.30 micron
Seals	Nitrile
Sight gauge	Polyamide (nylon)

Repair and Service Kits

Metal bowl / sight gauge / automatic float drain	**P3NKA00BSA**
Metal bowl / sight gauge / twist drain	**P3NKA00BSM**
Bowl latch kit	**C11A33**
DPI replacement kit	**PS781P**
Automatic float drain kit	**PS506P**
Twist drain kit	**PS512P**
Grade 6 element (standard)	**P3NKA00ESCB**
Sight gauge kit	**P3NKA00PE**
Mounting bracket kit*	**P3NKA00MW**

* If 1-1/2 BSPP E02 fittings are required, use P3NKA0BMW.

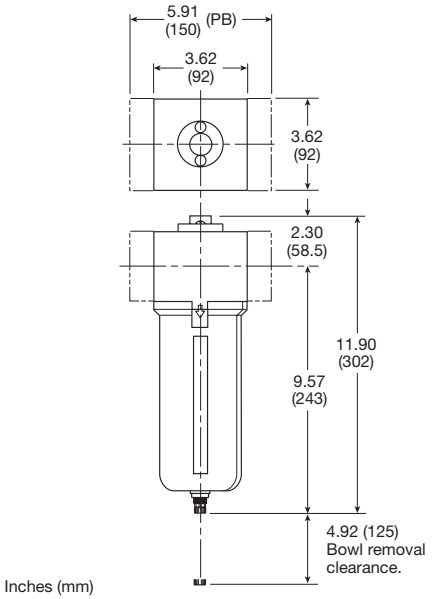

Inches (mm)

Flow Charts

Grade 6 Element

P3NF 3/4" Coalescing Filter

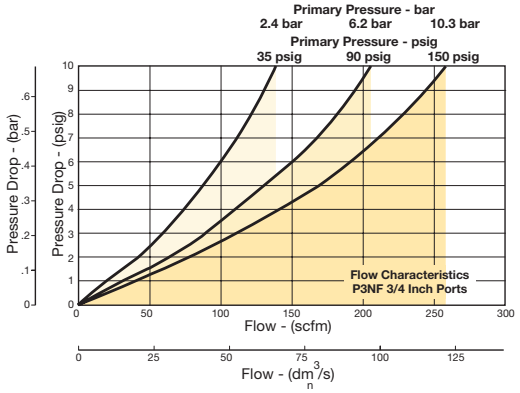

P3NF 1" & 1-1/2" Coalescing Filter

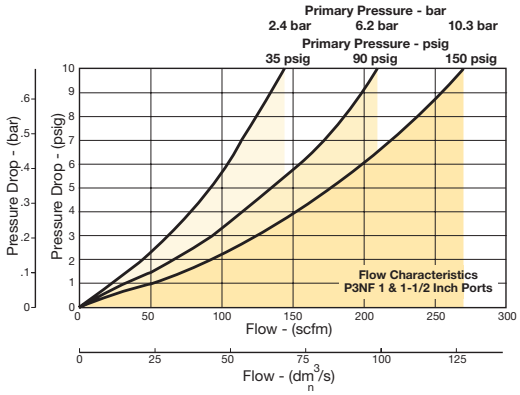

Tel: +45 63 12 83 00 | Email: ps@hymatik.com | www.hymatik.com | Hvidkaervej 27a, DK-5250 Odense SV, Denmark

P3NR Regulators – Hi-Flow

- Port blocks (PB) available to provide 1-1/2" port extension to 1" ported bodies
- Self relieving feature plus balanced poppet provides quick response and accurate pressure regulation
- Solid control piston for extended life
- 3/4", 1", 1-1/2" ports (NPT, BSPP)



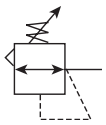

Port Size	Description	Part Number
3/4"	Without Gauge	**P3NRA96BNN**
3/4"	With 160 psi Gauge	**P3NRA96BNG**
1"	Without Gauge	**P3NRA98BNN**
1"	With 160 psi Gauge	**P3NRA98BNG**
1-1/2" #	Without Gauge	**P3NRA9PBNN**
1-1/2" #	With 160 psi Gauge	**P3NRA9PBNG**

1" port body with 1-1/2" port block.
NOTE: 2.0 Dia. (51 mm) hole required for panel mounting.

Operating information

Supply pressure (max):		250 psig (17.2 bar)
Operating temperature:		32°F to 175°F (0°C to 80°C)
Flow capacity†:		
High flow	3/4"	200 scfm (94.4 dm^3/s, ANR)
	1"	300 scfm (141.6 dm^3/s, ANR)
	1-1/2"	300 scfm (141.6 dm^3/s, ANR)
Gauge ports (2):		1/4 inch
Weight:	3/4", 1"	4.2 lb (1.9 kg)
	1-1/2" #	5.3 lb (2.4 kg)

† scfm = Standard cubic feet per minute at 100 psig inlet, 90 psig no flow secondary setting and 10 psig pressure drop.
# 1" port body with 1-1/2 port block

Ordering Information:

P3N R A 9 8 B N N

Engineering Level

Current	A

Port Type

G Thread (BSPP) Female	1*
NPT Female	9

* 3/4 & 1 inch meets ISO 1179-1 standard.

Port Size

3/4" (w/o port blocks)	6
1" (w/o port blocks)	8
1-1/2" Port Blocks (w/ 1" ported body)	P

Relief

B	Relieving

Adjustment

N	Non-Rising Knob

Pressure Gauge

Without Gauge	
N	125 psi (0 to 8 bar)
H	250 psi (0 to 17 bar)
With Gauge	
G	125 psi (0 to 8 bar)
J	250 psi (0 to 17 bar)

Note: BSPP ported units supplied using NPT ported bodies and BSPP port block kits.

☐ Most popular.

For inventory, lead times, and kit lookup, visit www.pdnplu.com

Parker Hannifin Corporation
Pneumatic Division
Richland, Michigan
www.parker.com/pneumatics

Tel: +45 63 12 83 00 | Email: ps@hymatik.com | www.hymatik.com | Hvidkaervej 27a, DK-5250 Odense SV, Denmark

Material Specifications

Adjusting stem	Steel
Body	Aluminum
Bonnet	Aluminum
Knob	Plastic
Piston	Plastic
Poppet assembly	Brass
Seals	Nitrile
Springs, poppet & control	Steel

Repair and Service Kits

Control knob	**P3NKA00PN**
2" dial face 60 psig (0 to 4.1 bar), gauge	**K4520N14060**
2" dial face 160 psig (0 to 11.0 bar), gauge	**K4520N14160**
2" dial face 300 psig (0 to 20.7 bar), gauge	**K4520N14300**
1-3/4" digital round face 160 psig (0 70 11.0 bar), gauge	**K4517N14160D**
Mounting bracket kit*	**P3NKA00MW**
Relieving	**P3NKA00RR**
Non-relieving	**P3NKA00RN**
1-60 psig spring	**C10A1304**
2-125 psig spring	**C10A1308**
5-250 psig spring	**C10A1317**

* If 1-1/2 BSPP E02 fittings are required, use P3NKA0BMW.

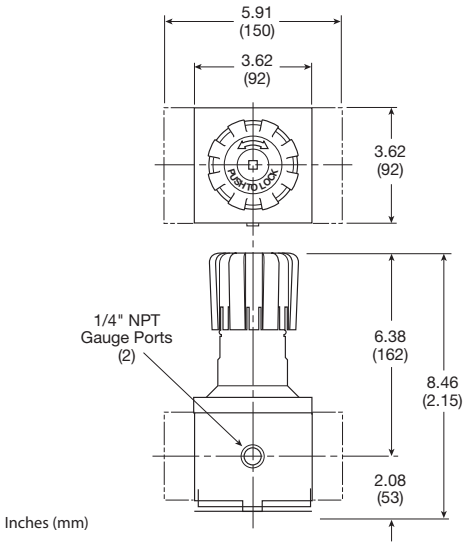

Flow Charts

P3NR 3/4" Regulator

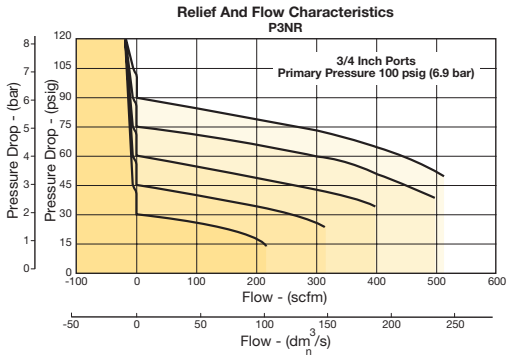

P3NR 1" & 1-1/2" Regulator

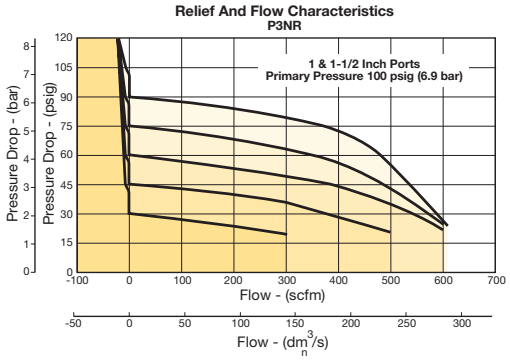

⚠ WARNING

Product rupture can cause serious injury.
Do not connect regulator to bottled gas.
Do not exceed Maximum primary pressure rating.

CAUTION:

REGULATOR PRESSURE ADJUSTMENT – The working range of knob adjustment is designed to permit outlet pressures within their full range. Pressure adjustment beyond this range is also possible because the knob is not a limiting device. This is a common characteristic of most industrial regulators, and limiting devices may be obtained only by special design. For best performance, regulated pressure should always be set by increasing the pressure up to the desired setting.

Tel: +45 63 12 83 00 | Email: ps@hymatik.com | www.hymatik.com | Hvidkaervej 27a, DK-5250 Odense SV, Denmark

P3NR Pilot Controlled Regulator - Hi-Flow

- Port blocks (PB) available to provide 1-1/2" port extension to 1" ported bodies
- Self relieving feature plus balanced poppet provides quick response and accurate pressure regulation
- Solid control piston for extended life
- 3/4", 1" 1-1/2" ports (NPT, BSPP)

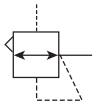



Port Size	Description	Part Number
3/4"	Without Gauge	**P3NRA96BPP**
1"	Without Gauge	**P3NRA98BPP**
1-1/2"#	Without Gauge	**P3NRA9PBPP**

1" port body with 1-1/2" port block.

Operating information

Supply pressure (max):		250 psig (17.2 bar)
Operating temperature:		32°F to 175°F (0°C to 80°C)
Flow capacity†:		
High flow	3/4"	300 scfm (141.6 dm^3/s, ANR)
	1"	300 scfm (141.6 dm^3/s, ANR)
	1-1/2"	350 scfm (165.2 dm^3/s, ANR)
Gauge ports (2):		1/4 inch
Weight:	3/4", 1"	3.3 lb (1.5 kg)
	1-1/2" #	4.4 lb (2.0 kg)

† scfm = Standard cubic feet per minute at 100 psig inlet, 90 psig no flow secondary setting and 10 psig pressure drop.

1" port body with 1-1/2 port block

Ordering Information:

P3N	R	A	9	8	B	P	P

Engineering Level

Current	A

Port Type

G Thread (BSPP) Female	1*
NPT Female	9

* 3/4 & 1 inch meets ISO 1179-1 standard.

Port Size

3/4" (w/o port blocks)	6
1" (w/o port blocks)	8
1-1/2" Port Blocks (w/ 1" ported body)	P

Relief

B	Relieving

Adjustment

P	Pilot Operated

Pressure Gauge

P	Pilot Operator, without Gauge

Note: BSPP ported units supplied using NPT ported bodies and BSPP port block kits.

☐ Most popular.

For inventory, lead times, and kit lookup, visit www.pdnplu.com

Parker Hannifin Corporation
Pneumatic Division
Richland, Michigan
www.parker.com/pneumatics

Tel: +45 63 12 83 00 | Email: ps@hymatik.com | www.hymatik.com | Hvidkaervej 27a, DK-5250 Odense SV, Denmark

Material Specifications

Adjusting stem	Steel
Body	Aluminum
Bonnet	Aluminum
Piston	Plastic
Poppet assembly	Brass
Seals	Nitrile
Springs – poppet	Steel

Repair and Service Kits

2" dial face 60 psig (0 to 4.1 bar), gauge	**K4520N14060**
2" dial face 160 psig (0 to 11.0 bar), gauge	**K4520N14160**
2" dial face 300 psig (0 to 20.7 bar), gauge	**K4520N14300**
1-3/4" digital round face 160 psig (0 70 11.0 bar), gauge	**K4517N14160D**
Mounting bracket kit*	**P3NKA00MW**
Relieving	**P3NKA00PD**

* If 1-1/2 BSPP E02 fittings are required, use P3NKA0BMW.

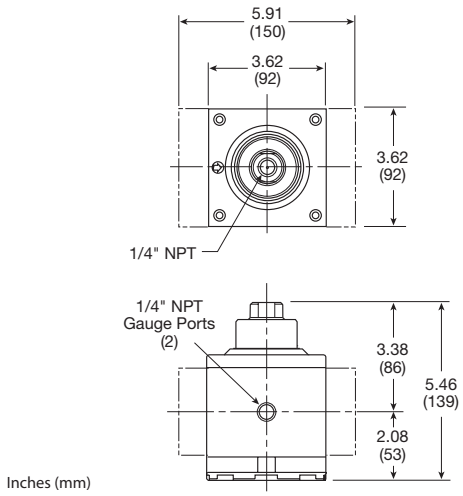

Inches (mm)

Flow Charts

P3NR 3/4" Regulator

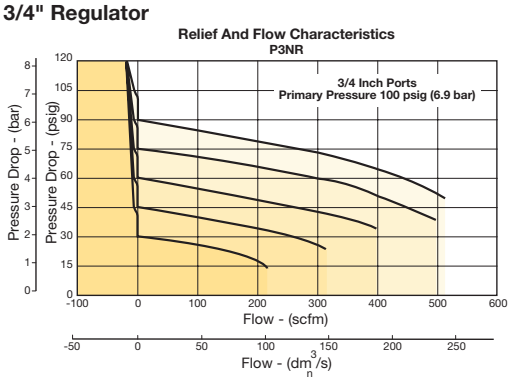

P3NR 1" & 1-1/2" Regulator

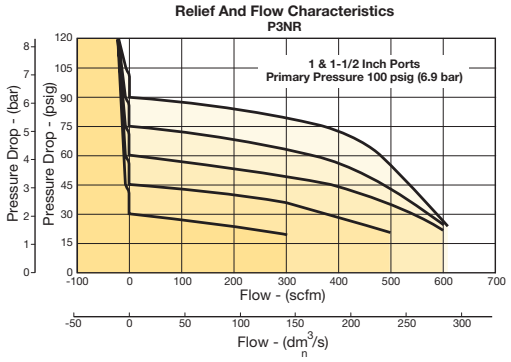

⚠ WARNING

Product rupture can cause serious injury.
Do not connect regulator to bottled gas.
Do not exceed Maximum primary pressure rating.

For inventory, lead times, and kit lookup, visit www.pdnplu.com

Parker Hannifin Corporation
Pneumatic Division
Richland, Michigan
www.parker.com/pneumatics

Tel: +45 63 12 83 00 | Email: ps@hymatik.com | www.hymatik.com | Hvidkaervej 27a, DK-5250 Odense SV, Denmark

P3NE Filter / Regulator – Hi-Flow

- Port blocks (PB) available to provide 1-1/2" port extension to 1" ported bodies
- Excellent water removal efficiency
- Metal bowl with sight gauge
- Large filter element surface guarantees low pressure drop and increased element life
- Twist drain as standard, optional auto drain
- Self relieving feature plus balanced poppet provides quick response and accurate pressure regulation
- Solid control piston for extended life
- 3/4", 1", 1-1/2" # ports (NPT, BSPP)



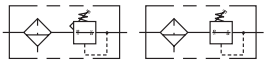

Port Size	Description	Part Number
3/4"	Metal Bowl, Sight Gauge, Twist Drain	**P3NEA96GSMBNN**
3/4"	Metal Bowl, Sight Gauge, Auto Float Drain	**P3NEA96GSABNN**
1"	Metal Bowl, Sight Gauge, Twist Drain	**P3NEA98GSMBNN**
1"	Metal Bowl, Sight Gauge, Auto Float Drain	**P3NEA98GSABNN**
1-1/2"#	Metal Bowl, Sight Gauge, Twist Drain	**P3NEA9PGSMBNN**
1-1/2"#	Metal Bowl, Sight Gauge, Auto Float Drain	**P3NEA9PGSABNN**

1" port body with 1-1/2" port block.

Operating information

Supply pressure (max):		0 to 250 psig (0 to 17.2 bar)
Operating temperature:		32°F to 175°F (0°C to 80°C)
Flow capacity†:		
High flow	3/4"	250 scfm (118 dm^3/s, ANR)
	1"	250 scfm (118 dm^3/s, ANR)
	1-1/2'	250 scfm (118 dm^3/s, ANR)
Bowl capacity:		18.0 oz.
Sump capacity:		6.8 oz.
Weight:	3/4	5.3 lb (2.4 kg)
	1"	5.3 lb (2.4 kg)
	1-1/2"	6.43 lb (2.9 kg)

† scfm = Standard cubic feet per minute at 90 psig inlet and 5 psig pressure drop with 40 micron element

1" port body with 1-1/2 port block

Ordering Information:

P3N E A 9 8 G S M B N N

Engineering Level
Current — A

Port Type
G Thread (BSPP) Female — 1*
NPT Female — 9
* 3/4 & 1 inch meets ISO 1179-1 standard.

Port Size
3/4" (w/o port blocks) — 6
1" (w/o port blocks) — 8
1-1/2" Port Blocks (w/ 1" ported body) — P

Element
40 micron — G

Bowl
S — Metal Bowl with Sight Gauge

Drains
M — Twist Drain
A — Auto Float Drain

Relief
B — Relieving

Adjustment
N — Non-Rising Knob

Port Type

Without Gauge	
N	125 psi (0 to 8 bar)
H	250 psi (0 to 17 bar)
With Gauge	
G	125 psi (0 to 8 bar)
J	250 psi (0 to 17 bar)

Note: BSPP ported units supplied using NPT ported bodies and BSPP port block kits.

☐ Most popular.

Material Specifications

Adjusting stem	Steel
Body, bonnet, bowl	Aluminum
Drain	Plastic
40 micron element (standard)	Plastic
5 micron element (optional)	Plastic
Adsorber element (optional)	Activated charcoal
Knob	Plastic
Piston	Plastic
Seals	Nitrile
Sight gauge	Polyamide (nylon)
Poppet & control, spring	Steel

Repair and Service Kits

Metal bowl, sight gauge / auto float drain	**P3NKA00BSA**
Metal bowl, sight gauge / twist drain	**P3NKA00BSM**
Bowl latch kit	**C11A33**
Control knob	**P3NKA00PN**
Auto float drain	**PS506P**
Twist drain	**PS512P**
40 micron element	**P3NKA00ESG**
5 micron element	**P3NKA00ESE**
Adsorber element	**P3NKA00ESA**
2" dial face 60 psig (0 to 4.1 bar), gauge	**K4520N14060**
2" dial face 160 psig (0 to 11.0 bar), gauge	**K4520N14160**
2" dial face 300 psig (0 to 20.7 bar), gauge	**K4520N14300**
1-3/4" digital round face 160 psig (0 70 11.0 bar), gauge	**K4517N14160D**
Mounting bracket kit*	**P3NKA00MW**
Relieving	**P3NKA00RR**
Non-relieving	**P3NKA00RN**
Sight gauge kit	**P3NKA00PE**
1-60 psig spring	**C10A1304**
2-125 psig spring	**C10A1308**
5-250 psig spring	**C10A1317**

* If 1-1/2 BSPP E02 fittings are required, use P3NKA0BMW.

⚠ WARNING

Product rupture can cause serious injury.
Do not connect regulator to bottled gas.
Do not exceed Maximum primary pressure rating.

CAUTION:

REGULATOR PRESSURE ADJUSTMENT – The working range of knob adjustment is designed to permit outlet pressures within their full range. Pressure adjustment beyond this range is also possible because the knob is not a limiting device. This is a common characteristic of most industrial regulators, and limiting devices may be obtained only by special design. For best performance, regulated pressure should always be set by increasing the pressure up to the desired setting.

Flow Charts

P3NE 3/4" Filter / Regulator

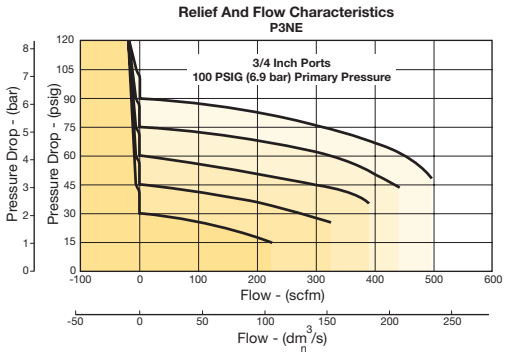

P3NE 1" & 1-1/2" Filter / Regulator

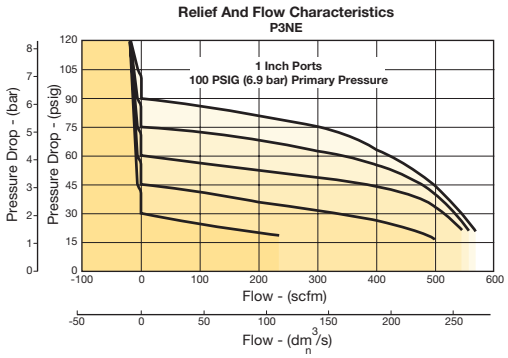

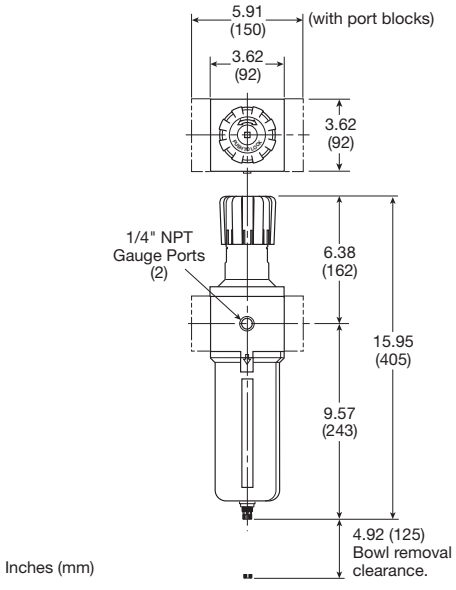

For inventory, lead times, and kit lookup, visit www.pdnplu.com

Parker Hannifin Corporation
Pneumatic Division
Richland, Michigan
www.parker.com/pneumatics

Tel: +45 63 12 83 00 | Email: ps@hymatik.com | www.hymatik.com | Hvidkaervej 27a, DK-5250 Odense SV, Denmark

P3NL Mist Lubricators – Hi-Flow

- Port blocks (PB) available to provide 1-1/2" port extension to 1" ported bodies
- Proportional oil delivery over a wide range of air flows
- Bowl can be filled while air line is under pressure
- Transparent sight dome for 360° visibility
- Integral 3/4", 1" ports (NPT, BSPP)





Port Size	Description	Part Number
3/4"	Metal Bowl, Sight Gauge, No Drain	**P3NLA96LSN**
1"	Metal Bowl, Sight Gauge, No Drain	**P3NLA98LSN**
1-1/2" #	Metal Bowl, Sight Gauge, No Drain	**P3NLA9PLSN**

1" Port Body with 1-1/2" Port Block.

Operating information

Supply pressure (max):		250 psig (17.2 bar)
Operating temperature:		32°F to 175°F (0°C to 80°C)
Flow capacity†:		
High flow	3/4"	240 scfm (113.3 dm^3/s, ANR)
	1"	250 scfm (118 dm^3/s, ANR)
	1-1/2"	260 scfm (122.7 dm^3/s, ANR)
Minimum flow		6.6 scfm (3.1 dm^3/s, ANR) at 100 psig (6.9 bar)
Bowl capacity:		18.0 oz.
Weight:	3/4", 1"	3.5 lb (1.6 kg)
	1-1/2" #	4.6 lb (2.1 kg)

† scfm = Standard cubic feet per minute at 90 psig inlet and 5 psig pressure drop.

1" port body with 1-1/2 port block

Ordering Information:

P3NL A 9 8 L S N

Engineering Level
Current A

Port Type
G Thread (BSPP) Female 1*
NPT Female 9
* 3/4 & 1 inch meet ISO 1179-1 Standard.

Port Size
3/4" (w/o port blocks) 6
1" (w/o port blocks) 8
1-1/2" Port Blocks (w/ 1" ported body) P

Type
L Oil Mist w/ Polycarbonate Sight Dome

Bowl
S Metal Bowl w/ Sight Gauge

Drain / Fill Device
N No Drain, Solid Bowl / Fill Plug

Note: All configured BSPP ported units are supplied using NPT ported bodies and BSPP port block kits.

Suggested Lubricant .....**F442 Oil**
Petroleum based oil of 100 to 200 SUS viscosity at 100°F (38°C) and an aniline point greater than 200°F (93°C)
(DO NOT USE OILS WITH ADDITIVES, COMPOUNDED OILS CONTAINING SOLVENTS, GRAPHITE, DETERGENTS, OR SYNTHETIC OILS.)

☐ Most popular.

For inventory, lead times, and kit lookup, visit www.pdnplu.com

Parker Hannifin Corporation
Pneumatic Division
Richland, Michigan
www.parker.com/pneumatics

Tel: +45 63 12 83 00 | Email: ps@hymatik.com | www.hymatik.com | Hvidkaervej 27a, DK-5250 Odense SV, Denmark

Material Specifications

Body, bowl	Aluminum
Injector meter block & base assembly	Plastic
Seals	Nitrile
Sight dome	Polycarbonate
Sight gauge	Polyamide (nylon)

Repair and Service Kits

Adjustment knob	**P04121**
Metal bowl / sight gauge / twist drain	**P3NKA00BSM**
Metal bowl / sight gauge / no drain	**P3NKA00BSN**
Bowl latch kit	**C11A33**
Twist drain kit	**PS512P**
Fill cap kit	**P3NKA00PL**
Sight dome kit, polycarbonate	**PS740P**
Sight dome kit, nylon	**PS740N**
Sight gauge kit	**P3NKA00PE**
Pressure fill adapter kit	**P3NKA00PK**
Service kit	**P3NKA00RL**
Mounting bracket kit*	**P3NKA00MW**
Oil (1 quart)	**F442001**
Oil (1 gallon)	**F442002**
Oil (12 quart case)	**F442003**
Oil (4 gallon case)	**F442005**

* If 1-1/2 BSPP E02 fittings are required, use P3NKA0BMW.

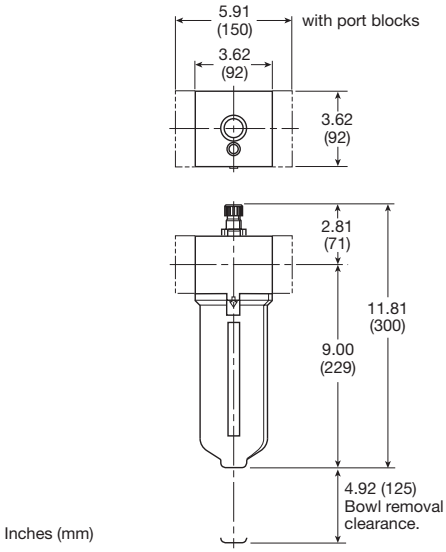

Inches (mm)

Flow Charts

P3NL 3/4" Lubricator

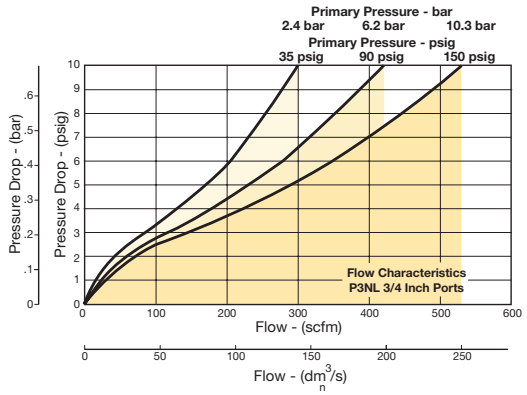

P3NL 1" & 1-1/2" Lubricator

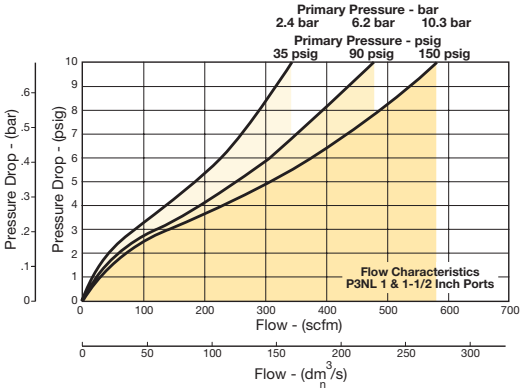

Tel: +45 63 12 83 00 | Email: ps@hymatik.com | www.hymatik.com | Hvidkaervej 27a, DK-5250 Odense SV, Denmark

Popular Combinations: Inlet pressure 90 psig (6.2 bar), and 0.3 psig (5 bar) pressure drop.



Filter/Regulator + Lubricator Combinations, metal bowl, manual twist drain 40 micron element, 125 psig (8.6 bar) regulator without gauge



Port Size	Bowl Type	Relief Type	Manual Twist Drain
3/4"	Metal, Twist Drain	Relieving	**P3NCA96SGMNNLNA**
1"	Metal, Twist Drain	Relieving	**P3NCA98SGMNNLNA**
1-1/2" #	Metal, Twist Drain	Relieving	**P3NCA9PSGMNNLNA**



Filter + Regulator + Lubricator Combinations, metal bowl, manual twist drain 40 micron element, 125 psig (8.6 bar) regulator without gauge



Port Size	Bowl Type	Relief Type	Manual Twist Drain
3/4"	Metal, Twist Drain	Relieving	**P3NCB96SGMNNLNA**
1"	Metal, Twist Drain	Relieving	**P3NCB98SGMNNLNA**
1-1/2" #	Metal, Twist Drain	Relieving	**P3NCB9PSGMNNLNA**

Notes: All combo part numbers are with regulator knob in up position.
BSPP ported units supplied using NPT ported bodies and BSPP port block kits.

1" Port body with 1-1/2" port block

Ordering Information:

P3N C A 9 6 S G M N N L N A

Type
Combination, Modular C

Combination
2-Unit, Hi-Flow, Metal Bowl A
3-Unit, Hi-Flow, Metal Bowl B

Port Type
G Thread (BSPP) Female 1
NPT Female 9

Port Size
3/4" (w/o port blocks) 6
1" (w/o port blocks) 8
1-1/2" Port Blocks (w/ 1" ported body) P

Bowl
Metal Bowl w/ Sight Gauge S

Element
40 micron G

Drains
M Twist Drain
A Auto Float Drain

Relief
N Relieving

Pressure Gauge
N 125 psi (0 to 8 bar), without Gauge
H 250 psi (0 to 17 bar), without Gauge
G 125 psi (0 to 8 bar), with Gauge
J 250 psi (0 to 17 bar), with Gauge

Lubricator Type
L Oil Mist w/ Polycarbonate Sight Dome

Lubricator Drain / Fill Device
N No Drain, Solid Bowl / Fill Plug

Mounting Option
A No Bracket or Kits
B Wall Bracket

Note: All configured BSPP ported units are supplied using NPT ported bodies and BSPP port block kits.

☐ Most popular.

Parker Hannifin Corporation
Pneumatic Division
Richland, Michigan
www.parker.com/pneumatics

Tel: +45 63 12 83 00 | Email: ps@hymatik.com | www.hymatik.com | Hvidkaervej 27a, DK-5250 Odense SV, Denmark

Repair and Service Kits

Mounting bracket kit	**P3NKA00MW**
Replacement body cover	**P3NKA00PM**
Individual NPT 3/4" Port block kits	**P3NKB96CP**
Individual NPT 1" Port block kits	**P3NKB98CP**
Individual NPT 1-1/2" Port block kits	**P3NKB9BCP**
Individual BSPP 3/4" Port block kits	**P3NKB16CP**
Individual BSPP 1" Port block kits	**P3NKB18CP**
Individual BSPP 1-1/2" Port block kits	**P3NKB1BCP**
Combination NPT 3/4" Port block kits	**P3NKB96CL**
Combination NPT 1" Port block kits	**P3NKB98CL**
Combination NPT 1-1/2" Port block kits	**P3NKB9BCL**
Combination BSPP 3/4" Port block kits	**P3NKB16CL**
Combination BSPP 1" Port block kits	**P3NKB18CL**
Combination BSPP 1-1/2" Port block kits	**P3NKB1BCL**

Note: 2-piece filter and regulator (F+R) assemblies require a (P3NKXXCCP) port block kit.

⚠ WARNING

Product rupture can cause serious injury.
Do not connect regulator to bottled gas.
Do not exceed Maximum primary pressure rating.

CAUTION:

REGULATOR PRESSURE ADJUSTMENT – The working range of knob adjustment is designed to permit outlet pressures within their full range. Pressure adjustment beyond this range is also possible because the knob is not a limiting device. This is a common characteristic of most industrial regulators, and limiting devices may be obtained only by special design. For best performance, regulated pressure should always be set by increasing the pressure up to the desired setting.

P3NCA (Modular 2-unit)

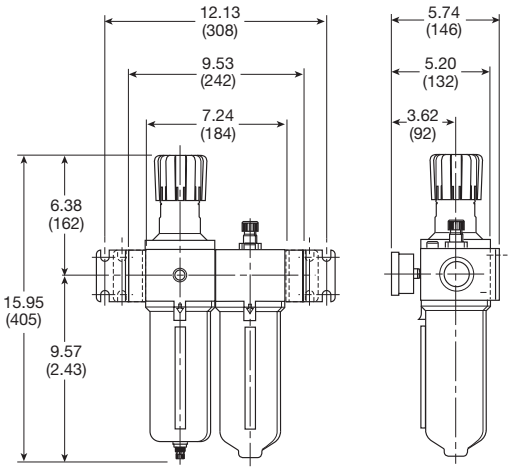

Inches (mm)

P3NCB (Modular 3-unit)

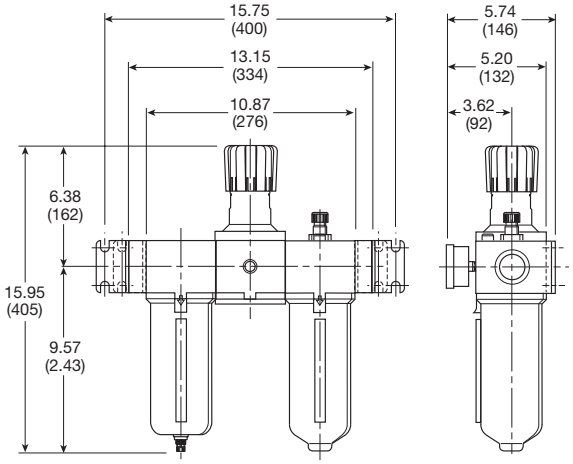

Inches (mm)

Modular Assembly

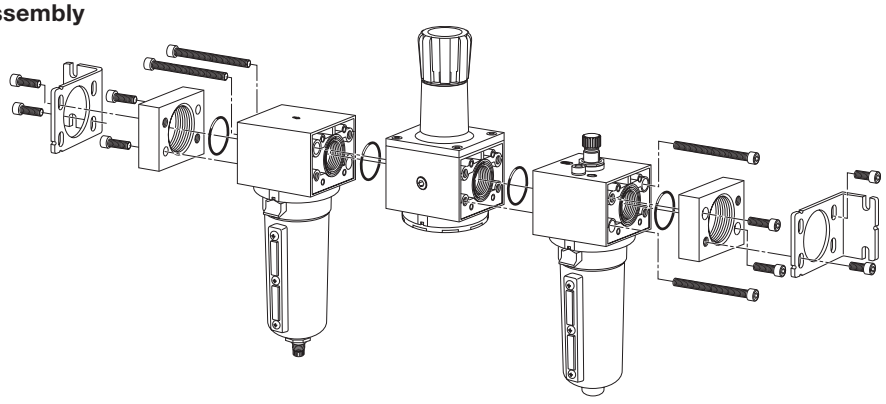

For inventory, lead times, and kit lookup, visit www.pdnplu.com

Parker Hannifin Corporation
Pneumatic Division
Richland, Michigan
www.parker.com/pneumatics

Tel: +45 63 12 83 00 | Email: ps@hymatik.com | www.hymatik.com | Hvidkaervej 27a, DK-5250 Odense SV, Denmark

Parker Hannifin Corporation
Pneumatic Division
Richland, Michigan
www.parker.com/pneumatics

Tel: +45 63 12 83 00 | Email: ps@hymatik.com | www.hymatik.com | Hvidkaervej 27a, DK-5250 Odense SV, Denmark



Air Preparation Products General Industrial

F602 Particulate Filters	H2-H7
35F / 43F Particulate Filters	H8-H9
35F / 43F Coalescing Filters	H10-H11
F701 Coalescing Filters	H12-H13
P3TF Flanged Coalescing Filters	H14-H15
R119 Regulators	H16-H25
09R Regulators	H26-H27
L606 Lubricators	H28-H31
09L Lubricators	H32-H33
C628 Combinations	H34

Parker Hannifin Corporation
Pneumatic Division
Richland, Michigan
www.parker.com/pneumatics

Tel: +45 63 12 83 00 | Email: ps@hymatik.com | www.hymatik.com | Hvidkaervej 27a, DK-5250 Odense SV, Denmark

F602 Particulate Filters – Hi-Flow

- Excellent water removal efficiency
- For heavy duty applications with minimum pressure drop requirement
- Unique deflector plate that creates swirling of the air stream ensuring maximum water and dirt separation
- Large filter element surface guarantees low pressure drop and increased element life
- 40 micron filter element standard, 5 micron available
- Metal bowl with sight gauge standard
- Twist drain as standard, optional auto drain
- 3/4" & 1" port, NPT & BSPP



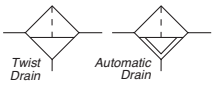

Port Size	Description	Part Number
3/4"	16 oz. Metal Bowl / Manual Drain	**F602-06WJ**
3/4"	16 oz. Metal Bowl / Auto Drain	**F602-06WJR**
3/4"	32 oz. Metal Bowl / Manual Drain	**F602-06EJ**
3/4"	32 oz. Metal Bowl / Auto Drain	**F602-06EJR**
1"	16 oz. Metal Bowl / Manual Drain	**F602-08WJ**
1"	16 oz. Metal Bowl / Auto Drain	**F602-08WJR**
1"	32 oz. Metal Bowl / Manual Drain	**F602-08EJ**
1"	32 oz. Metal Bowl / Auto Drain	**F602-08EJR**

Operating information

Supply pressure (max):		
Aluminum (E)		0 to 300 psig (0 to 20.7 bar)
Zinc with gauge (W)		0 to 250 psig (0 to 17.2 bar)
With internal auto drain [R]		20 to 175 psig (1.14 to 11.9 bar)
With external auto drain [Q]		0 to 250 psig (0 to 17.2 bar)
Operating temperature:		
Aluminum (E)		40°F to 150°F (4.4°C to 65.6°C)
Zinc with gauge (W)		40°F to 150°F (4.4°C to 65.6°C)
With internal auto drain [R]		40°F to 125°F (4.4°C to 52°C)
With external auto drain [Q]		40°F to 150°F (4.4°C to 65.6°C)
Flow capacity†:		
High flow	3/4"	270 scfm (127.4 dm^3/s, ANR)
	1"	300 scfm (141.5 dm^3/s, ANR)
Bowl capacity:		
Zinc with gauge (W)		16 oz.
Aluminum (E)		32 oz.
Weight:	16 oz.	6.3 lb (2.86)
	32 oz.	7.0 lb (3.18 kg)

† scfm = Standard cubic feet per minute at 90 psig inlet and 5 psig pressure drop.
( ) Bowl type, [ ] drain type.

Ordering Information:

F602 – 06 W J ☐ /**

Port Threads

NPT	–
G BSPP	G

Port Size

3/4 inch	06
1 inch	08

Bowl

32 oz. Large Capacity Metal without Sight Gauge	E
16 oz. Metal with Sight Gauge	W

Element

G	5 Micron
J	40 Micron

Drains and Options

Blank	Manual Twist Drain
Q	External Heavy Duty Auto Drain
R	Internal Auto Drain
U	Semi-Auto Drain

Engineering Level

/**	Will be Entered at Factory

☐ Most popular.

Material Specifications

Body	Zinc
Bowl (E) 32 oz. without sight gauge	Aluminum
Bowl (W) 16 oz. with sight gauge	Zinc
Manual twist drain & overnight	Brass
Drain housing “R”	Acetal
Drain housing “Q”	Bronze
Element	Polypropylene
Seals	Nitrile
Sight gauge	Nylon

Repair and Service Kits

Aluminum bowl (E) 32 oz.	**BK603B**
Zinc bowl with sight gauge (W) 16 oz.	**BK605WB**
External auto drain (E) 32 oz.	**SA603D**
External auto drain (W) 16 oz.	**SA602D**
Internal auto drain (All)	**SA602MD**
Manual drain (All)	**SA600Y7-1**
Semi-auto “overnight” drain *(drains automatically under zero pressure)*	**SA602A7**
40 micron element (All)	**EK602B**
5 micron element (All)	**EK602VB**
Mounting bracket, 3/4" Unit *(pair or 2 kits pipe mounted brackets needed)*	**SA200AW57**
Mounting bracket, 1" Unit *(pair or 2 kits pipe mounted brackets needed)*	**SA200CW57**
Deflector, baffle assembly, & retaining rod (E,W)	**RK602B**
External auto drain (All)	**RK602D**
Internal auto drain (All)	**RK602MD**
Sight glass repair kit (W)	**RKB605WB**

“Q” Option External Heavy Duty Auto Drain SA602D / SA603D

For heavy duty applications where the filter is being used to remove large volumes of liquid and/or particulate matter from the airstream, the external automatic drain (“Q” option) should be used.

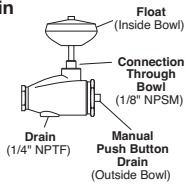

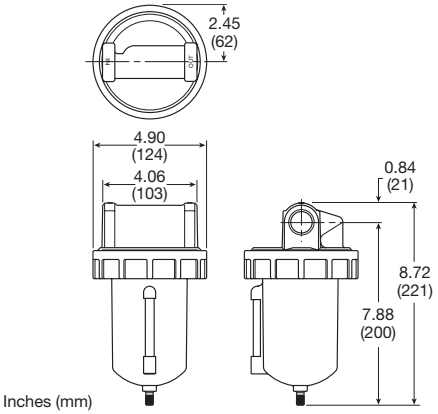

F602-06W, F602-08W (Hi-Flow)

Flow Charts

F602 3/4" Particulate Filter

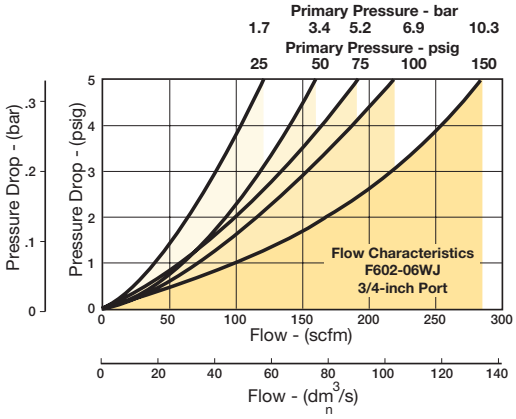

F602 1" Particulate Filter

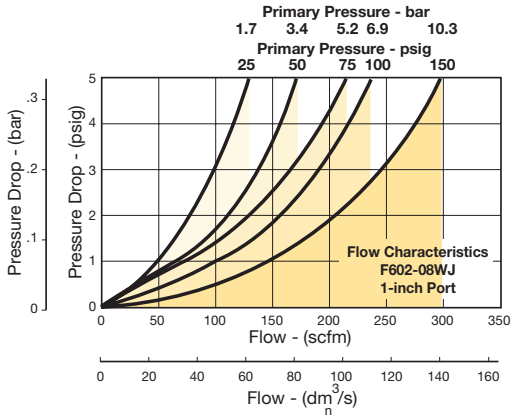

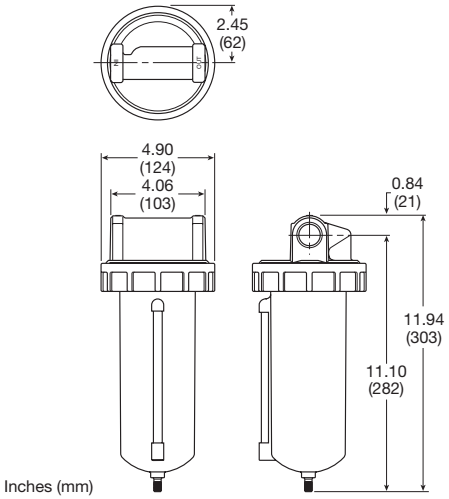

F602-06E, F602-08E (Hi-Flow)

For inventory, lead times, and kit lookup, visit www.pdnplu.com

Parker Hannifin Corporation
Pneumatic Division
Richland, Michigan
www.parker.com/pneumatics

Tel: +45 63 12 83 00 | Email: ps@hymatik.com | www.hymatik.com | Hvidkaervej 27a, DK-5250 Odense SV, Denmark

F602 Particulate Filters – Hi-Flow

- Excellent water removal efficiency
- For heavy duty applications with minimum pressure drop requirement
- Unique deflector plate that creates swirling of the air stream ensuring maximum water and dirt separation
- Large filter element surface guarantees low pressure drop and increased element life
- 40 micron filter element standard, 5 micron available
- Metal bowl with sight gauge standard
- Twist drain as standard, optional auto drain
- Large bowl capacity
- Optional high capacity bowl(s) available
- 1-1/2" port, NPT & BSPP



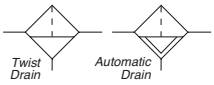

Port Size	Description	Part Number
1-1/2"	16 oz. Metal Bowl / Manual Drain	**F602-12WJ**
1-1/2"	16 oz. Metal Bowl / Auto Drain	**F602-12WJR**
1-1/2"	32 oz. Metal Bowl / Manual Drain	**F602-12EJ**
1-1/2"	32 oz. Metal Bowl / Auto Drain	**F602-12EJR**

Operating information

Supply pressure (max):		
Aluminum (E)		0 to 300 psig (0 to 20.7 bar)
Zinc with gauge (W)		0 to 250 psig (0 to 17.2 bar)
With internal auto drain [R]		20 to 175 psig (1.14 to 11.9 bar)
With external auto drain [Q]		0 to 250 psig (0 to 17.2 bar)
Operating temperature:		
Aluminum (E)		40°F to 150°F (4.4°C to 65.6°C)
Zinc with gauge (W)		40°F to 150°F (4.4°C to 65.6°C)
With internal auto drain [R]		40°F to 125°F (4.4°C to 52°C)
With external auto drain [Q]		40°F to 150°F (4.4°C to 65.6°C)
Flow capacity†:		
High flow	1-1/2"	450 scfm (212.4 dm^3/s, ANR)
Bowl capacity:		
Zinc with gauge (W)		16 oz.
Aluminum (E)		32 oz.
Weight:	16 oz.	7.0 lb (3.18 kg)
	32 oz.	7.7 lb (3.49 kg)

† scfm = Standard cubic feet per minute at 90 psig inlet and 5 psig pressure drop.
( ) Bowl type, [ ] drain type.

Ordering Information:

F602 – 12 W J [ ] /**

Port Threads

NPT	–
G BSPP	G

Port Size

1-1/2 inch	12

Bowl

32 oz. Large Capacity Metal without Sight Gauge	E
16 oz. Metal with Sight Gauge	W

Element

G	5 Micron
J	40 Micron

Drains and Options

Blank	Manual Twist Drain
Q	External Heavy Duty Auto Drain
R	Internal Auto Drain
U	Semi-Auto Drain

Engineering Level

/**	Will Be Entered at Factory

☐ Most popular.

Material Specifications

Body	Zinc
Bowl (E) 32 oz. without sight gauge	Aluminum
Bowl (W) 16 oz. with sight gauge	Zinc
Manual twist drain & overnight	Brass
Drain housing “R”	Acetal
Drain housing “Q”	Bronze
Element	Polypropylene
Seals	Nitrile
Sight gauge	Nylon

Repair and Service Kits

Aluminum bowl (E) 32 oz.	**BK603B**
Zinc bowl with sight gauge (W) 16 oz.	**BK605WB**
External auto drain (E) 32 oz.	**SA603D**
External auto drain (W) 16 oz.	**SA602D**
Internal auto drain (All)	**SA602MD**
Manual drain (All)	**SA600Y7-1**
Semi-automatic “overnight” drain *(drains automatically under zero pressure)*	**SA602A7**
40 micron element (All)	**EK602B**
5 micron element (All)	**EK602VB**
Deflector, baffle assembly, & retaining rod (All)	**RK602C**
External auto drain (All)	**RK602D**
Internal auto drain (All)	**RK602MD**
Sight glass repair kit (W)	**RKB605WB**

Flow Charts

F602 1-1/2" Particulate Filter

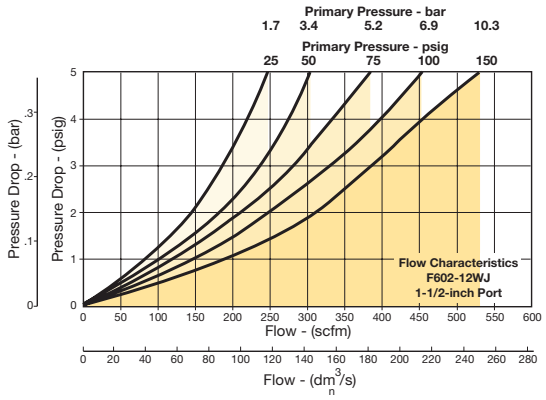

“Q” Option External Heavy Duty Auto Drain
SA602D / SA603D

For heavy duty applications where the filter is being used to remove large volumes of liquid and/or particulate matter from the airstream, the external automatic drain (“Q” option) should be used.

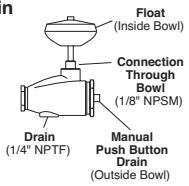

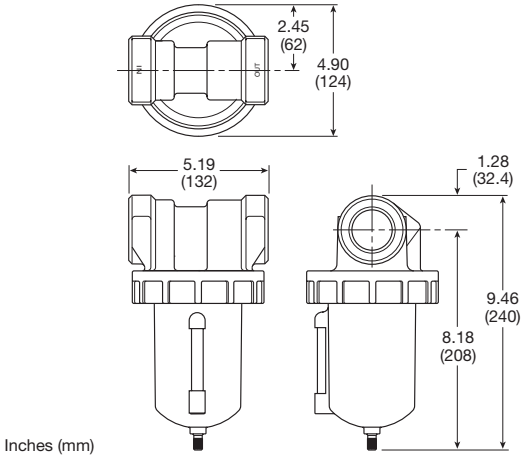

Inches (mm)

F602-12W (Hi-Flow)

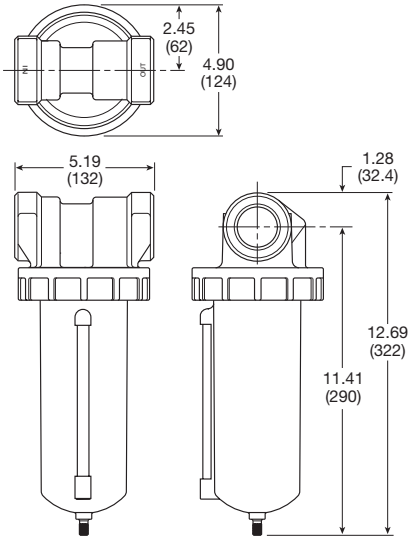

Inches (mm)

F602-12E (Hi-Flow)

Parker Hannifin Corporation
Pneumatic Division
Richland, Michigan
www.parker.com/pneumatics

Tel: +45 63 12 83 00 | Email: ps@hymatik.com | www.hymatik.com | Hvidkaervej 27a, DK-5250 Odense SV, Denmark

F602 Particulate Filters – Hi-Flow

- Excellent water removal efficiency
- For heavy duty applications with minimum pressure drop requirement.
- Unique deflector plate that creates swirling of the air stream ensuring maximum water and dirt separation.
- Large filter element surface guarantees low pressure drop and increased element life.
- 40 micron filter element standard.
- Metal bowl with sight gauge standard.
- Twist drain as standard, optional auto drain.
- Large bowl capacity.
- Optional high capacity bowl(s) available
- 2" port, NPT & BSPP



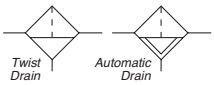

Port Size	Description	Part Number
2"	16 oz. Metal Bowl / Manual Drain	**F602-16WJ**
2"	16 oz. Metal Bowl / Auto Drain	**F602-16WJR**
2"	32 oz. Metal Bowl / Manual Drain	**F602-16EJ**
2"	32 oz. Metal Bowl / Auto Drain	**F602-16EJR**

Operating information

Supply pressure (max):		
Aluminum (E)		0 to 300 psig (0 to 20.7 bar)
Zinc with gauge (W)		0 to 250 psig (0 to 17.2 bar)
With internal auto drain [R]		20 to 175 psig (1.14 to 11.9 bar)
With external auto drain [Q]		0 to 250 psig (0 to 17.2 bar)
Operating temperature:		
Aluminum (E)		40°F to 150°F (4.4°C to 65.6°C)
Zinc with gauge (W)		40°F to 150°F (4.4°C to 65.6°C)
With internal auto drain [R]		40°F to 125°F (4.4°C to 52°C)
With external auto drain [Q]		40°F to 150°F (4.4°C to 65.6°C)
Flow capacity†:		
High flow	2"	1200 scfm (566.3 dm^3/s, ANR)
Bowl capacity:		
Zinc with gauge (W)		16 oz.
Aluminum (E)		32 oz.
Weight:	16 oz.	9.8 lb (4.45 kg)
	32 oz.	10.3 lb (4.67 kg)

† scfm = Standard cubic feet per minute at 90 psig inlet and 5 psig pressure drop.
( ) Bowl type, [ ] drain type.

Ordering Information:

F602 – 16 W J ☐ /**

Port Threads

NPT	–
G BSPP	G

Port Size

2 inch	16

Bowl

32 oz. Large Capacity Metal without sight gauge	E
16 oz. Metal with Sight Gauge	W

Element

J	40 Micron

Drains and Options

Blank	Manual Twist Drain
Q	External Heavy Duty Auto Drain
R	Internal Auto Drain
U	Semi-Auto Drain

Engineering Level

/**	Will Be Entered at Factory

☐ Most popular.

Tel: +45 63 12 83 00 | Email: ps@hymatik.com | www.hymatik.com | Hvidkaervej 27a, DK-5250 Odense SV, Denmark

Material Specifications

Body	Aluminum
Bowl (E) 32 oz. without sight gauge	Aluminum
Bowl(W) 16 oz. with sight gauge	Zinc
Manual twist drain & overnight	Brass
Drain housing “R”	Acetal
Drain housing “Q”	Bronze
Element	Polypropylene
Seals	Buna N
Sight Gauge	Nylon

Repair and Service Kits

Aluminum bowl (E) 32 oz.	**BK603B**
Zinc bowl with sight gauge (W) 16 oz.	**BK605WB**
External auto drain (E) 32 oz.	**SA603D**
External auto drain (W) 16 oz.	**SA602D**
Internal auto drain (All)	**SA602MD**
Manual drain (All)	**SA600Y7-1**
Semi-auto “overnight” drain *(drains automatically under zero pressure)*	**SA602A7**
40 micron element (All)	**EK602G**
Deflector, baffle assembly, & retaining rod (All)	**RK602C**
External auto drain (All)	**RK602D**
Internal auto drain (All)	**RK602MD**
Sight glass repair kit (W)	**RKB605WB**

Flow Charts

F602 2" Particulate Filter

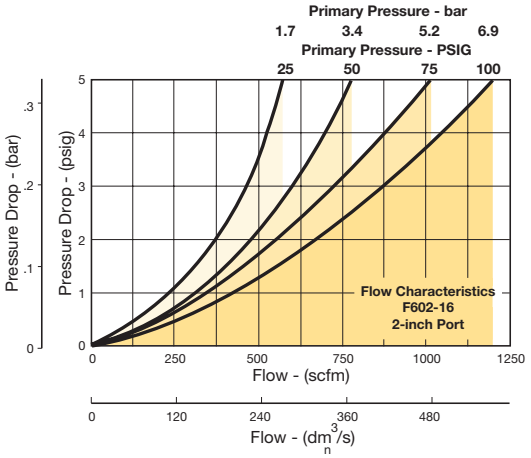

“Q” Option External Heavy Duty Auto Drain SA602D / SA603D

For heavy duty applications where the filter is being used to remove large volumes of liquid and/or particulate matter from the airstream, the external automatic drain (“Q” option) should be used.

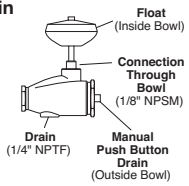

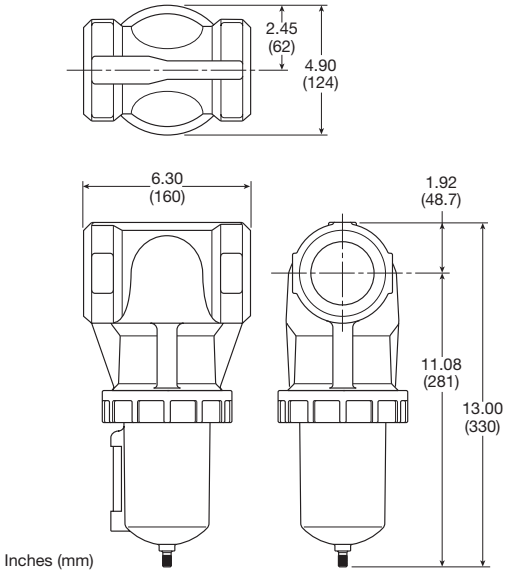

F602-16W (Hi-Flow)

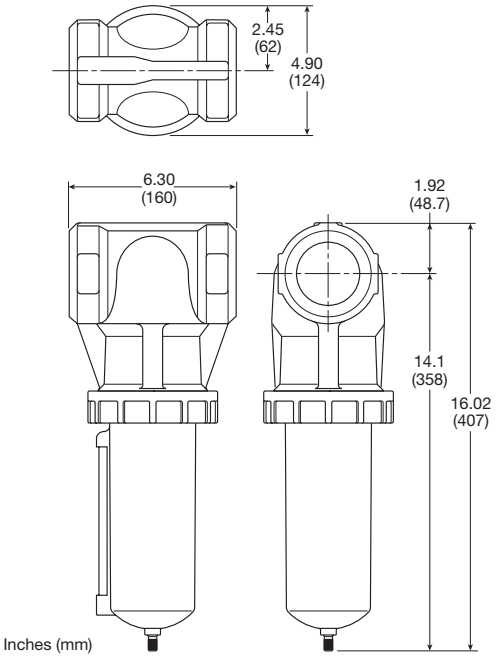

F602-16E (Hi-Flow)

Tel: +45 63 12 83 00 | Email: ps@hymatik.com | www.hymatik.com | Hvidkaervej 27a, DK-5250 Odense SV, Denmark

35F / 43F Particulate Filters – Hi-Flow

- Heavy-duty cast aluminum housings to withstand operating pressures up to 250 psig*
- Differential pressure indicator to eliminate the guesswork of element replacement
- Differential pressure gauge available, order separately, kit DP3-01-000
- Unique drain mounting plate design offers a trouble-free method for interchanging and installing external drains
- 1-1/2" & 2" (35F), 3" (43F) ports, NPT & BSPP





Auto Drain

Port Size	Description	Part Number
1-1/2"	Metal Bowl / Auto Drain	**35F77BAP**
2"	Metal Bowl / Auto Drain	**35F87BAP**
3"	Metal Bowl / Auto Drain	**43FN7BAP**

Operating information

Supply pressure (max):		
With pressure gauge		
without DPI*		250 psig (17.2 bar)
with DPI		150 psig (10.3 bar)
Operating temperature:		32°F to 150°F (0°C to 65.6°C)
Flow capacity†:		
High flow	1-1/2"	1280 scfm (604.1 dm^3/s, ANR)
	2"	1400 scfm (660.7 dm^3/s, ANR)
	3"	2900 scfm (1368.6 dm^3/s, ANR)
Bowl capacity:	35F	13.9 oz.
	43F	17.2 oz.
Standard Filtration:		5 micron
Weight:	35F	19.3 lb (8.7 kg)
	43F	32.8 lb (14.9 kg)

† scfm = Standard cubic feet per minute at 90 psig inlet and 5 psig pressure drop.
* Without differential pressure indicator, max supply pressure is 250 psig (17.2 bar).

Ordering Information:

35F 7 7 B A P ☐

Port Size

1-1/2 inch (35F)	7
2 inch (35F)	8
3 inch (43F)	N

Bowl

Metal without Sight Gauge, Auto Float Drain	7

Element

5 Micron	B

Element

A	Current

Options

N	Without Differential Pressure Indicator
P*	With Differential Pressure Indicator
G**	With Differential Pressure Gauge

* Maximum pressure rating 150 psig (10.3 bar).
** Gauge ships loose

Port Threads

Blank	NPT
1	BSPP

☐ Most popular.

Tel: +45 63 12 83 00 | Email: ps@hymatik.com | www.hymatik.com | Hvidkaervej 27a, DK-5250 Odense SV, Denmark

Material Specifications

Baffle	Plated steel
Body	Aluminum
Bowls	Aluminum
Deflector	Plated steel
Element retainer	Plated steel
Filter element	Polyethylene
Seals	Fluorocarbon
Stud	Plated steel

Repair and Service Kits

Differential pressure indicator cap For pressures over 150 psig	**GRP-95-022**
Differential pressure gauge	**DP3-01-000**
Differential pressure indicator	**DP2-02-001**
Auto drain, 1/8 NPT	**GRP-95-981**
Drain plate kit, 1/2 NPT tapped drain port	**GRP-95-393**
Element, 5 micron (35F)	**FRP-95-505**
Element, 5 micron (43F)	**FRP-95-508**
Manual drain kit with 1/2" drain plate	**GRP-95-392**

35F Particulate Filter

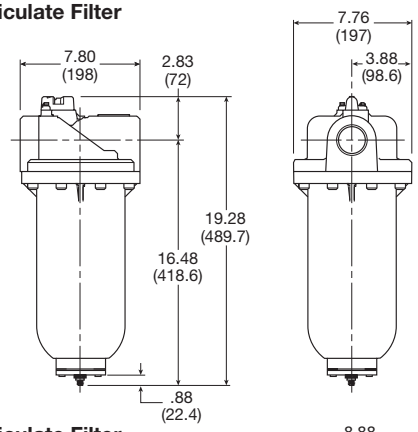

43F Particulate Filter

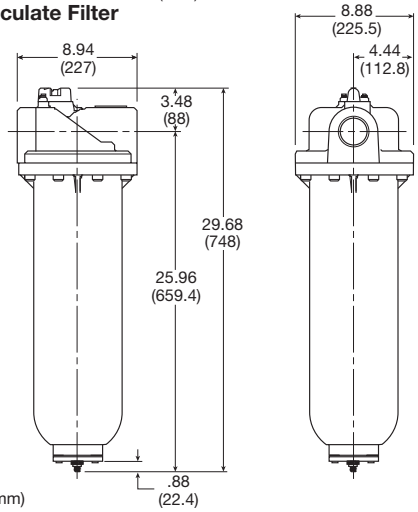

Inches (mm)

Flow Charts

35F, 1-1/2" Particulate Filter

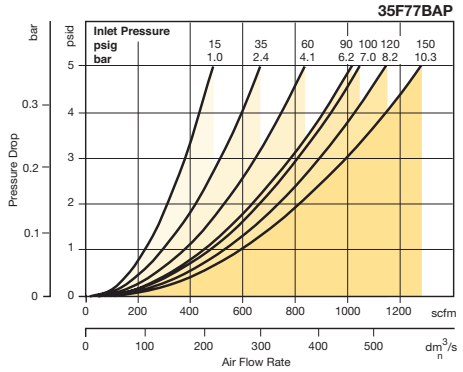

35F, 2" Particulate Filter

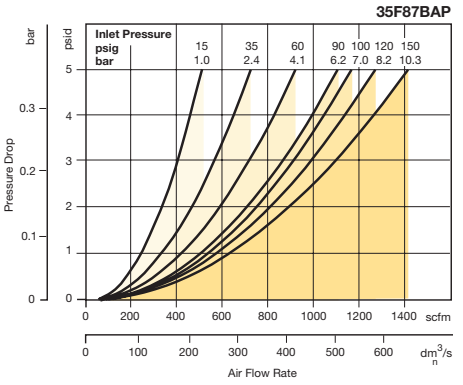

43F, 3" Particulate Filter

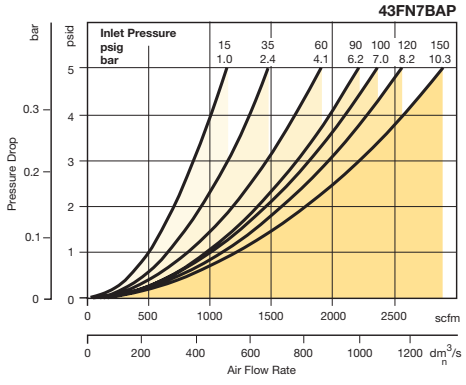

For inventory, lead times, and kit lookup, visit www.pdnplu.com

Parker Hannifin Corporation
Pneumatic Division
Richland, Michigan
www.parker.com/pneumatics

Tel: +45 63 12 83 00 | Email: ps@hymatik.com | www.hymatik.com | Hvidkaervej 27a, DK-5250 Odense SV, Denmark

35F / 43F Coalescing Filters – Hi-Flow

- Heavy-duty cast aluminum housings to withstand operating pressures up to 250 psig*
- Differential pressure indicator to eliminate the guesswork of element replacement
- Differential pressure gauge available, order separately, kit DP3-01-000
- Unique drain mounting plate design offers a trouble-free method for interchanging and installing external drains
- High-flow filter elements: coalescing, 1 micron and 0.01 micron
- 1-1/2", 2", 3" ports (NPT, BSPP, BSPT)

* Without Differential Pressure Indicator – Max. supply pressure is 250 psig (20.1 bar).





Auto Drain

Port Size	Description	Part Number
1-1/2"	0.01 micron / Auto Float	**35F77EAP**
1-1/2"	1.0 micron / Auto Float	**35F77HAP**
2"	0.01 micron / Auto Float	**35F87EAP**
2"	1.0 micron / Auto Float	**35F87HAP**
3"	0.01 micron / Auto Float	**43FN7EAP**
3"	1.0 micron / Auto Float	**43FN7HAP**

Operating information

Supply pressure (max):		
With pressure gauge		
without DPI*		250 psig (17.2 bar)
with DPI		150 psig (10.3 bar)
Operating temperature:		32°F to 150°F (0°C to 65.6°C)
Flow capacity†:		
High flow	(35F) 1-1/2"	710 scfm (335 dm^3/s, ANR)
	(35F) 2"	710 scfm (335 dm^3/s, ANR)
	(43F) 3"	1770 scfm (835 dm^3/s, ANR)
Bowl capacity:	35F	13.9 oz.
	43F	17.2 oz.
Standard Filtration:		0.01 & 1 micron
Weight:	35F	19.3 lb (8.7 kg)
	43F	32.8 lb (14.9 kg)

† scfm = Standard cubic feet per minute at 90 psig inlet and 5 psig pressure drop.

* Filtration temperature of 70°F (21°C) @ 100 psig (6.9 bar) with typical compressor lubricating oil and protected by 0.01 micron filter.

Ordering Information:

35F | **7** | **7** | **H** | **A** | **P** | ☐

Port Size

1-1/2 inch (35F)	7
2 inch (35F)	8
3 inch (43F)	N

Bowl

Metal without Sight Gauge, Auto Float Drain	7

Element

0.01 Micron	E
1 Micron	H

Engineering Level

A	Current

Options

N	Without Differential Pressure Indicator
P*	With Differential Pressure Indicator

* Maximum pressure rating 150 psig.

Port Threads

Blank	NPT
1	BSPP
2	BSPT

☐ Most popular.

For inventory, lead times, and kit lookup, visit www.pdnplu.com

Parker Hannifin Corporation
Pneumatic Division
Richland, Michigan
www.parker.com/pneumatics

Tel: +45 63 12 83 00 | Email: ps@hymatik.com | www.hymatik.com | Hvidkaervej 27a, DK-5250 Odense SV, Denmark

Material Specifications

Body	Aluminum
Bowls	Aluminum
Filter element	Borosilicate cloth
Seals	Fluorocarbon
Stud	Plated steel

Repair and Service Kits

Differential pressure indicator cap – for pressures over 150 psig	**GRP-95-022**
Differential pressure indicator	**DP2-02-001**
Drain, automatic, internal, fluorocarbon, 1/8 NPT	**GRP-95-981**
Drain plate kit, 1/2 NPT tapped drain port	**GRP-95-393**
35F: 0.01 Micron element	**MTP-95-502**
35F: 1.0 Micron element	**MSP-95-502**
43F: 0.01 Micron element	**MTP-95-562**
43F: 1.0 Micron element	**MSP-95-876**
Manual drain kit with 1/2" drain plate	**GRP-95-392**

35F (Hi-Flow)

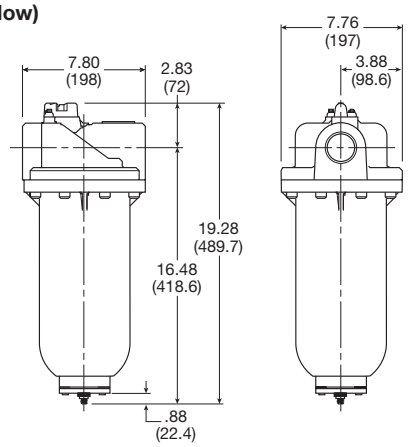

43F (Hi-Flow)

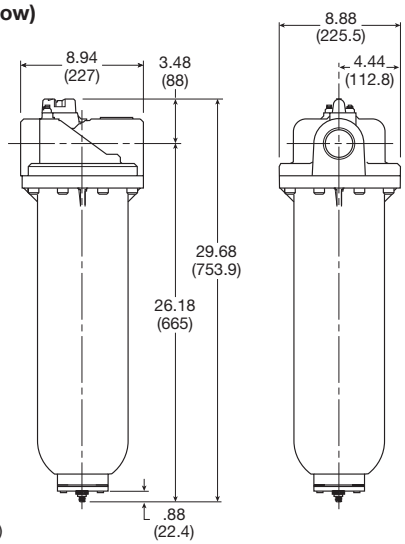

Inches (mm)

Flow Charts

35F 1-1/2" Coalescing Filters

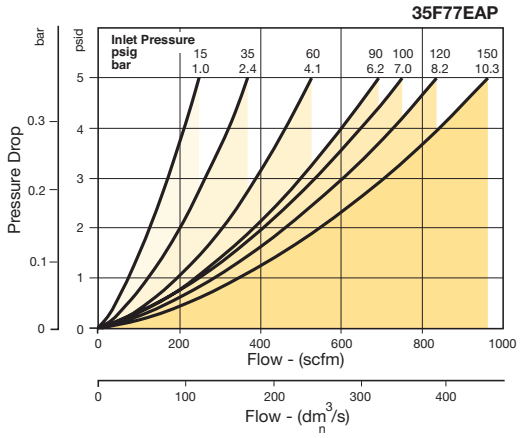

35F 2" Coalescing Filters

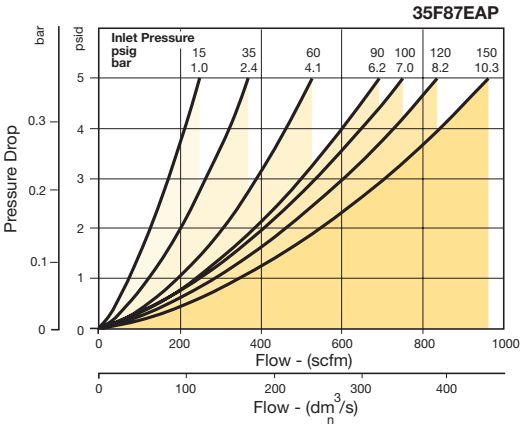

43F 3" Coalescing Filters

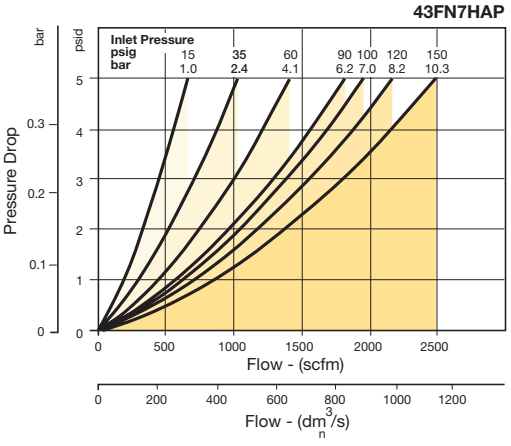

For inventory, lead times, and kit lookup, visit www.pdnplu.com

Parker Hannifin Corporation
Pneumatic Division
Richland, Michigan
www.parker.com/pneumatics

Tel: +45 63 12 83 00 | Email: ps@hymatik.com | www.hymatik.com | Hvidkaervej 27a, DK-5250 Odense SV, Denmark

F701 Coalescing Filters – Hi-Flow

- Removes liquid aerosols and sub-micron particles.
- Protects pneumatic systems from contamination that standard particulate filters will not catch.
- Two different grade elements available.
- Differential pressure indicator (pop-up) standard.
- Differential pressure gauge optional.
- High flow design
- 3/4", 1" ports (NPT, BSPP)

Note: All coalescing filters should be protected by a particulate filter (i.e., F602, or other) installed upstream.



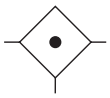

Port Size	Description	Part Number
3/4"	32 oz. Metal Bowl, Grade 6 Element	**F701-06E3P**
3/4"	100 oz. Metal Bowl, Grade 6 Element	**F701-06L3P**
3/4"	32 oz. Metal Bowl, Grade 10 Element	**F701-06E7P**
3/4"	100 oz. Metal Bowl, Grade 10 Element	**F701-06L7P**
1"	32 oz. Metal Bowl, Grade 6 Element	**F701-08E3P**
1"	100 oz. Metal Bowl, Grade 6 Element	**F701-08L3P**
1"	32 oz. Metal Bowl, Grade 10 Element	**F701-08E7P**
1"	100 oz. Metal Bowl, Grade 10 Element	**F701-08L7P**

Operating information

Supply pressure (max):		
Manual drains		0 to 300 psig (0 to 20.7 bar)
Auto drains		
"R" low pressure internal		175 psig (12.0 bar)
"T" High pressure internal		250 psig (17.2 bar)
"Q" external		250 psig (17.2 bar)
Operating pressure drop:		
Normal	Dry	2 psig (0.14 bar)
	Wet	5 psig (0.34 bar)
Max recommended (Element should be replaced)		10 psig (0.7 bar)
Minimum recommended flow:		20% nominal rating of element
Operating temperature (max):		32°F to 150°F (0°C to 65°C)
"R", "T", "Q" drains		125°F (52°C)
Flow capacity†:		
Grade 6 (0.01 micron)	32 oz*	95 scfm (44.8 dm^3/s, ANR)
	100 oz*	170 scfm (80 dm^3/s, ANR)
Grade 10 (1.0 micron)	32 oz*	158 scfm (75 dm^3/s, ANR)
	100 oz*	285 scfm (135 dm^3/s, ANR)
Weight:	32 oz	5.0 lb (2.3 kg)
	100 oz	8.0 lb (3.6 kg)

† scfm = Standard cubic feet per minute at 90 psig inlet and 5 psig pressure drop.
* Dry media flow, for wet media flow information see table on next page.

Ordering Information:

F701 – 06 W 3 [ ] /**

Port Threads	
NPT	–
G BSPP	G

Port Size	
3/4 inch	06
1 inch	08

Bowl	
32 oz. Metal without Sight Gauge	E
100 oz. Metal without Sight Gauge	L

Element	
3	Grade 6
7	Grade 10

Drains and Options	
Blank	Manual Twist Drain
T	High Pressure Internal Auto Drain
Q*	External Auto Drain
R	Low Pressure Internal Auto Drain

* Q option not available with bowl option L.

Engineering Level	
/**	Will Be Entered at Factory

☐ Most popular.

For inventory, lead times, and kit lookup, visit www.pdnplu.com

Parker Hannifin Corporation
Pneumatic Division
Richland, Michigan
www.parker.com/pneumatics

Tel: +45 63 12 83 00 | Email: ps@hymatik.com | www.hymatik.com | Hvidkaervej 27a, DK-5250 Odense SV, Denmark

Material Specifications

Body & flange ring	Zinc
Metal bowl (E) (L)	Aluminum
Auto float drain, housing “R”, “T” (internal)	Acetal
Auto float drain, housing “Q” (external)	Bronze
Auto float drain, manual twist drain	Brass
Seals & float	Buna N
Springs	Stainless steel
Element (media)	Borosilicate fibers & felt
Element end caps	Urethane
Seals	Buna N

Repair and Service Kits

Bracket - 3/4 (pair of pipe mounted brackets)	**SA200AW57**
Bracket - 1 (pair of pipe mounted brackets)	**SA200CW57**
32 oz bowl kit - 3/4, 1 inch (E)	**BK603B**
32 oz bowl kit - 3/4, 1 inch (L) 100 oz.	**BK603C**
Differential pressure pop up Indicator repair kit (only works with originally equipped units)	**RK701P**
Differential pressure gauge (only works on units without pop-up indicator)	**DP276-P**
Internal automatic drain kit, high pressure (T)	**SA702MD**
Manual twist drain kit	**SA600Y7-1**
Grade 6 element - 3/4, 1 Inch (E) 32 oz.	**F701-C3-0773**
Grade 6 element - 3/4, 1 Inch (L) 100 oz.	**F701-C3-0774**
Grade 10 element - 3/4, 1 Inch (E) 32 oz.	**F701-C7-0773**
Grade 10 element - 3/4, 1 Inch (L) 100 oz.	**F701-C7-0774**

( ) = Bowl Type

Flow Charts

F701 3/4" & 1" Coalescing Filter

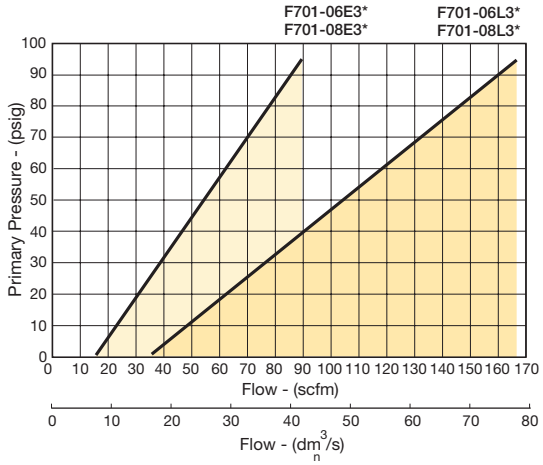

Media Specifications

Grade	D.O.P. Coalescing efficiency 0.3 to 0.6 micron particles	Maximum oil carryover[1] PPM w/w	Pressure drop (PSID)[2] @ rated flow	
			Media dry	Media Wet with 10-20 wt. oil
6	99.97%	0.008	1.0	2-3
10	95%	0.85	0.5	0.5

[1] Tested per BCAS 860900 at 40 ppm inlet.
[2] Add dry + wet for total pressure drop.
D.O.P. = Dioctylphthalate

F701 - 32 oz. bowl (Hi-Flow)

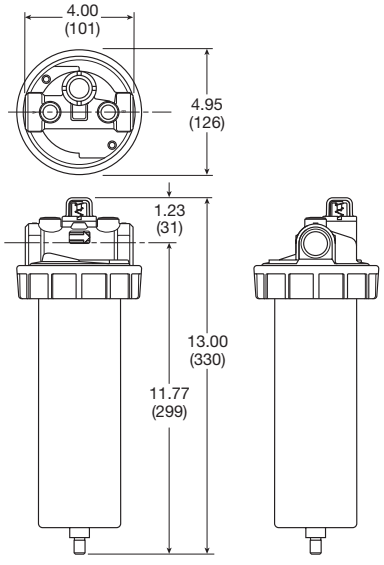

Inches (mm)

F701 - 100 oz. bowl (Hi-Flow)

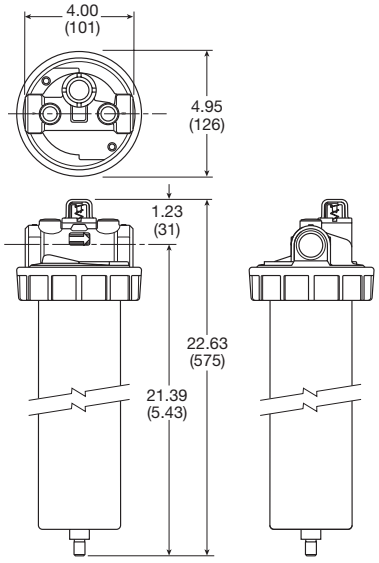

P3TF Series Flanged Coalescing Filters

- No tie rod element design
- Pleated element technology
- New high efficiency drainage layer
- Designed in accordance with ASME and CRN
- Connection sizes: 4" & 6" flange
- Acrylic polyurethane coating for corrosion protection
- Float drain is standard, shipped loose
- DP gauge is standard, installed



Port Size	Element Type	Number Of Elements	Part Number
4"	0.01 micron	4	**P3TFAFFD2AN**
4"	1.0 micron	4	**P3TFAFFQ2AN**
6"	0.01 micron	6	**P3TFAFGD3AN**
6"	1.0 micron	6	**P3TFAFGQ3AN**

Operating information

Supply pressure (max):		232 psig (16 bar)
Operating temperature:		35°F to 212°F (1.5°C to 100°C)
Flow capacity†:	4"	2119 scfm (1000 dm^3/s, ANR)
	6"	4132 scfm (1950 dm^3/s, ANR)
Standard Filtration:		0.01 & 1 micron

† scfm = Standard cubic feet per minute at 90 psig inlet and 5 psig pressure drop.

Material Specifications

Body	Steel
Baffle	Plated steel
Deflector	Plated steel
Element	Borosilicate cloth
Seals	Fluorocarbon
Stud	Plated steel

Repair and Service Kits

DP gauge replacement kit	**DPG-Kit**
Float drain kit - 1/2" NPT	**HDF-120-NPT-A**
0.01 Micron element (4 or 6 required)	**060AA**
1.0 Micron element (4 or 6 required)	**060AO**

☐ Most popular.

Parker Hannifin Corporation
Pneumatic Division
Richland, Michigan
www.parker.com/pneumatics

Tel: +45 63 12 83 00 | Email: ps@hymatik.com | www.hymatik.com | Hvidkaervej 27a, DK-5250 Odense SV, Denmark

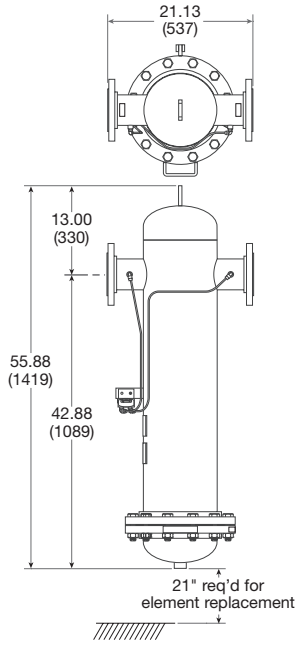

P3TFAFFD2AN & P3TFAFFQ2AN

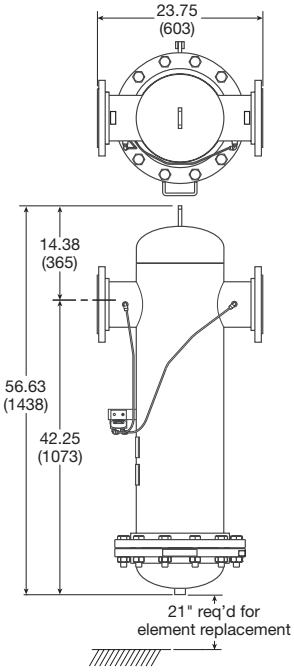

P3TFAFGD3AN & P3TFAFGQ3AN

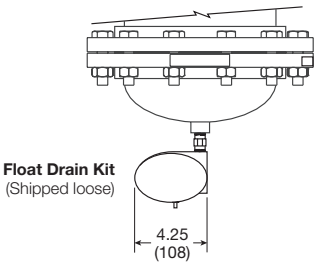

For inventory, lead times, and kit lookup, visit www.pdnplu.com

Parker Hannifin Corporation
Pneumatic Division
Richland, Michigan
www.parker.com/pneumatics

Tel: +45 63 12 83 00 | Email: ps@hymatik.com | www.hymatik.com | Hvidkaervej 27a, DK-5250 Odense SV, Denmark

R119 Regulators – Standard

- High flow performance featuring rugged design for the most demanding applications
- Ideal for those installations calling for constant pressure with wide variation in flow
- Diaphragm operated design with balanced poppet design for quick and accurate regulation
- Secondary aspiration plus balanced poppet provides quick response and accurate pressure regulation
- Heavy duty tee handle adjustment
- Reverse flow version available
- Panel mount version available
- 1/4", 3/8", 1/2" ports (NPT, BSPP)



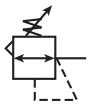

Port Size	Description (0-125 psig reduced pressure)	Part Number
1/4"	Without Gauge, Relieving, NPT	**R119-02C**
1/4"	With Gauge, Relieving, NPT	**R119-02CG**
3/8"	Without Gauge, Relieving, NPT	**R119-03C**
3/8"	With Gauge, Relieving, NPT	**R119-03CG**
1/2"	Without Gauge, Relieving, NPT	**R119-04C**
1/2"	With Gauge, Relieving, NPT	**R119-04CG**

Operating information

Supply pressure (max):		300 psig (0 to 20.7 bar)
Reduced pressure range:		2 to 125 psig (0.15 to 8.5 bar)
Operating temperature:		40°F to 125°F (4.4°C to 52°C)
Flow capacity†:		
High flow	1/4"	100 scfm (47.2 dm^3/s, ANR)
	3/8"	110 scfm (51.9 dm^3/s, ANR)
	1/2"	150 scfm (70.8 dm^3/s, ANR)
Gauge ports (2):		1/4 inch
Weight:	1/4"	1.8 lb (0.82 kg)
	3/8"	1.8 lb (0.82 kg)
	1/2"	3.2 lb (1.45 kg)

† scfm = Standard cubic feet per minute at 100 psig inlet, 75 psig no flow secondary setting and 20 psig pressure drop.

Ordering Information:

R119 – 02 C ☐ /**

Port Threads	
NPT	–
G BSPP	G

Port Size	
1/4 inch	02
3/8 inch	03
1/2 inch	04

Reduced Pressure Range	
0-25 psig	A
0-60 psig	B
0-125 psig	C
0-250 psig	D

Options	
Blank	None
G	Gauge
K†	Non-Relieving
X64**	Fluorocarbon O-Rings and Diaphragm
X80*	Reverse Flow
X7	Brass Bottom Plug

Engineering Level	
/**	Will Be Entered at Factory

* Reverse flow for use downstream of control valves.
** Brass bottom plug standard with X64 option.
† Not available with 250 psig spring.

☐ Most popular.

Parker Hannifin Corporation
Pneumatic Division
Richland, Michigan
www.parker.com/pneumatics

Tel: +45 63 12 83 00 | Email: ps@hymatik.com | www.hymatik.com | Hvidkaervej 27a, DK-5250 Odense SV, Denmark

Material Specifications

Adjusting screw, springs	Steel
Body, spring cage	Zinc
Bottom plug	Nylon
Innervalve	Brass
Seals	Buna N

Repair and Service Kits

2" dial face 60 psig (0 to 4.1 bar), gauge	**K4520N14060**
2" dial face 160 psig (0 to 11.0 bar), gauge	**K4520N14160**
2" dial face 300 psig (0 to 20.7 bar), gauge	**K4520N14300**
1-3/4" digital round face 160 psig (0 to 11.0 bar), gauge	**K4517N14160D**
Mounting bracket, 1/4", 3/8"	**SA15Y57**
Mounting bracket, 1/2"	**18A57**
Panel mount conversion kit, 1/4", 3/8"	**4202**
Panel mount conversion kit, 1/2"	**4204**
Non-relieving diaphragm, valve assembly (1/4", 3/8"; all psig)	**RK118Y**
Relieving diaphragm, valve assembly (1/4", 3/8"; all psig)	**RK119Y**
Non-Relieving diaphragm, valve assembly (1/2"; 25, 60, 125 psig)	**RK118A**
Relieving diaphragm, valve assembly (1/2"; 25, 60, 125 psig)	**RK119A**
Relieving diaphragm, valve assembly (1/2"; 250 psig)	**RK119A250**
Spring cage & T-handle kit (1/4 & 3/8)	**RKC119Y**
Spring cage & insert only kit (1/2)	**SAC18A3/BK**

For fluorocarbon repair kits, add X64 to kit number suffix.

CAUTION:

REGULATOR PRESSURE ADJUSTMENT – The working range of knob adjustment is designed to permit outlet pressures within their full range. Pressure adjustment beyond this range is also possible because the knob is not a limiting device. This is a common characteristic of most industrial regulators, and limiting devices may be obtained only by special design. For best performance, regulated pressure should always be set by increasing the pressure up to the desired setting.

R119-02C, R119-03C

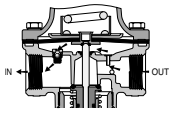

X80 Reverse Flow Option

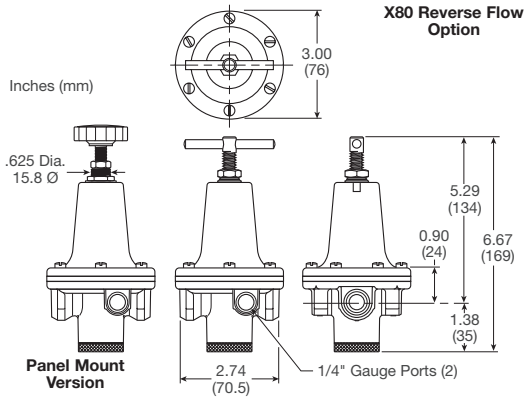

Panel Mount Version

Flow Charts

R119 1/4" Regulator

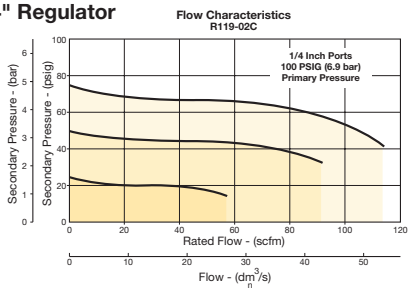

R119 3/8" Regulator

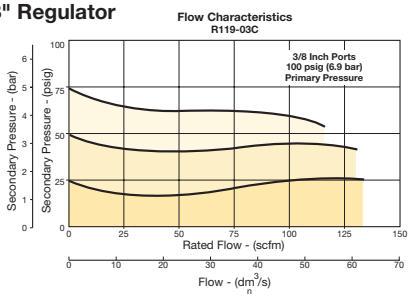

R119 1/2" Regulator

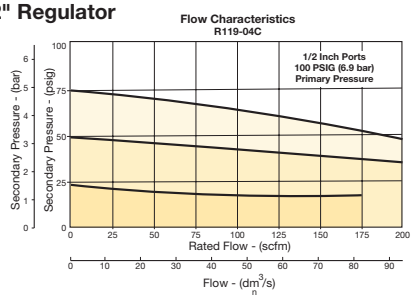

⚠ WARNING

Product rupture can cause serious injury.
Do not connect regulator to bottled gas.
Do not exceed Maximum primary pressure rating.

R119-04C

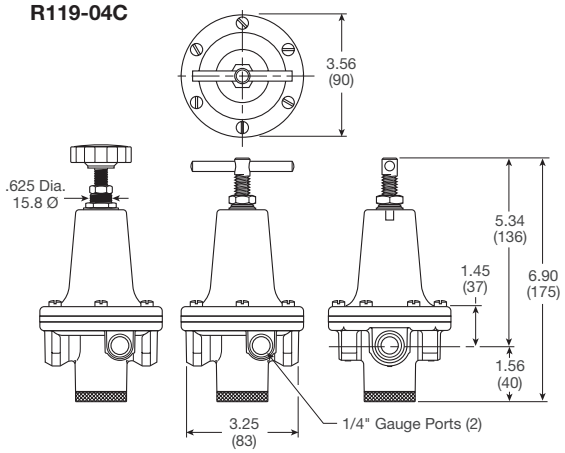

For inventory, lead times, and kit lookup, visit www.pdnplu.com

Parker Hannifin Corporation
Pneumatic Division
Richland, Michigan
www.parker.com/pneumatics

Tel: +45 63 12 83 00 | Email: ps@hymatik.com | www.hymatik.com | Hvidkaervej 27a, DK-5250 Odense SV, Denmark

R119 Regulators – Hi-Flow

- High flow performance featuring rugged design for the most demanding applications
- Ideal for those installations calling for constant pressure with wide variation in flow
- Diaphragm operated design with balanced poppet design for quick and accurate regulation
- Secondary aspiration plus balanced poppet provides quick response and accurate pressure regulation
- Heavy duty tee handle adjustment
- Reverse flow version available
- 3/4", 1", 1-1/2" ports (NPT, BSPP)



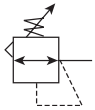

Port Size	Description (0-125 psig reduced pressure)	Part Number
3/4"	Without Gauge, Relieving, NPT	**R119-06C**
3/4"	With Gauge, Relieving, NPT	**R119-06CG**
1"	Without Gauge, Relieving, NPT	**R119-08C**
1"	With Gauge, Relieving, NPT	**R119-08CG**
1-1/2"	Without Gauge, Relieving, NPT	**R119-12C**
1-1/2"	With Gauge, Relieving, NPT	**R119-12CG**

Operating information

Supply pressure (max):		300 psig (0 to 20.7 bar)
Reduced pressure range:		2 to 125 psig (0.15 to 8.5 bar)
Operating temperature:		40°F to 125°F (4.4°C to 52°C)
Flow capacity†:		
High flow	3/4"	300 scfm (141.6 dm^3/s, ANR)
	1"	400 scfm (188.8 dm^3/s, ANR)
	1-1/2"	500 scfm (236 dm^3/s, ANR)
Gauge ports (2):		1/4 inch
Weight:	3/4"	6.2 lb (2.81 kg)
	1"	6.2 lb (2.81 kg)
	1-1/2"	7.2 lb (3.27 kg)

† scfm = Standard cubic feet per minute at 100 psig inlet, 75 psig no flow secondary setting and 20 psig pressure drop.

Ordering Information:

R119 – 06 C [ ] /**

Port Threads	
NPT	–
G BSPP	G

Port Size	
3/4 inch	06
1 inch	08
1-1/2 inch	12

Reduced Pressure Range	
0-125 psig	C
0-250 psig	D

Options	
Blank	None
G	Gauge
K	Non-Relieving
X64**	Fluorocarbon O-Rings and Diaphragm
X80*	Reverse Flow
X7	Brass Bottom Plug

* Reverse flow for use downstream of control valves.
** Brass bottom plug standard with X64 option.

Engineering Level	
/**	Will Be Entered at Factory

☐ **Most popular.**

For inventory, lead times, and kit lookup, visit www.pdnplu.com

Parker Hannifin Corporation
Pneumatic Division
Richland, Michigan
www.parker.com/pneumatics

Tel: +45 63 12 83 00 | Email: ps@hymatik.com | www.hymatik.com | Hvidkaervej 27a, DK-5250 Odense SV, Denmark

Material Specifications

Adjusting screw, springs	Steel
Body, spring cage	Zinc
Bottom plug	Nylon
Innervalve	Brass
Seals	Buna N

Repair and Service Kits

2" dial face 60 psig (0 to 4.1 bar), gauge	**K4520N14060**
2" dial face 160 psig (0 to 11.0 bar), gauge	**K4520N14160**
2" dial face 300 psig (0 to 20.7 bar), gauge	**K4520N14300**
1-3/4" digital round face 160 psig (0 to 11.0 bar), gauge	**K4517N14160D**
Mounting bracket kit	**18B57**
Non-relieving diaphragm, valve assembly (3/4", 1")	**RK118B**
Non-relieving diaphragm, valve assembly (1-1/2")	**RK118D**
Relieving diaphragm, valve assembly (3/4", 1")	**RK119B**
Relieving diaphragm, valve assembly (1-1/2")	**RK119D**

For Fluorocarbon Repair Kits, add X64 to kit number suffix.

⚠ WARNING

Product rupture can cause serious injury.
Do not connect regulator to bottled gas.
Do not exceed Maximum primary pressure rating.

CAUTION:

REGULATOR PRESSURE ADJUSTMENT – The working range of knob adjustment is designed to permit outlet pressures within their full range. Pressure adjustment beyond this range is also possible because the knob is not a limiting device. This is a common characteristic of most industrial regulators, and limiting devices may be obtained only by special design. For best performance, regulated pressure should always be set by increasing the pressure up to the desired setting.

Flow Charts

3/4" Regulator

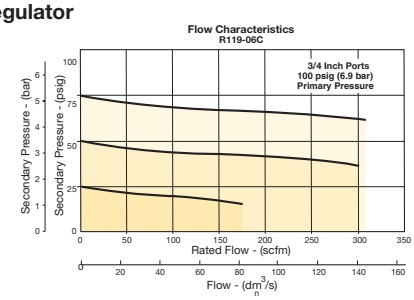

1" Regulator

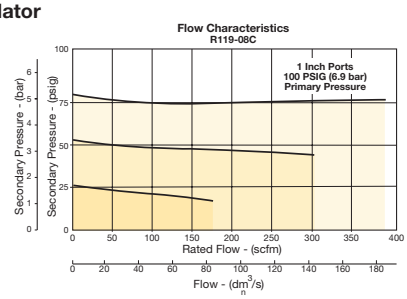

1-1/2" Regulator

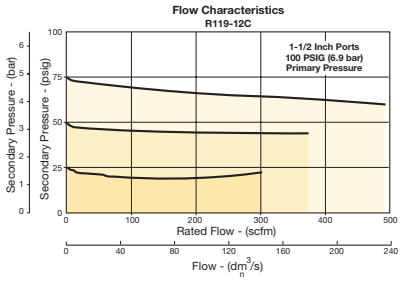

R119-06C, R119-08C

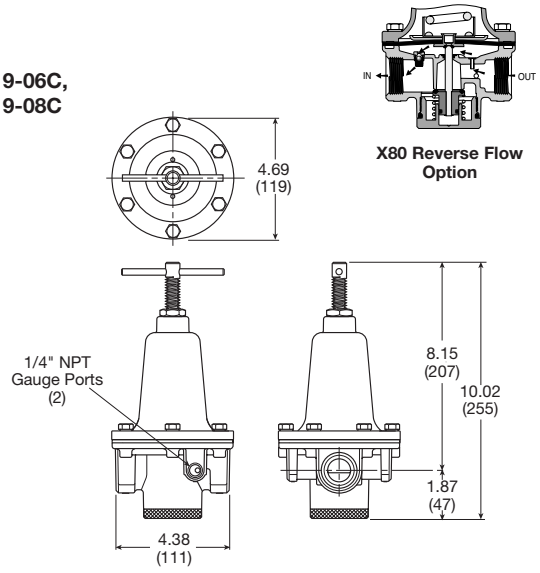

X80 Reverse Flow Option

R119-12C

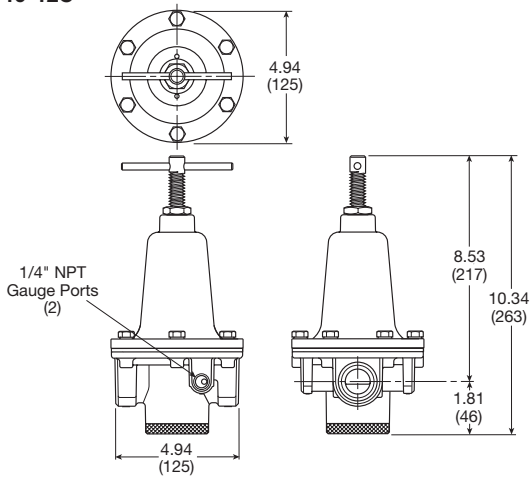

Inches (mm)

For inventory, lead times, and kit lookup, visit www.pdnplu.com

Parker Hannifin Corporation
Pneumatic Division
Richland, Michigan
www.parker.com/pneumatics

Tel: +45 63 12 83 00 | Email: ps@hymatik.com | www.hymatik.com | Hvidkaervej 27a, DK-5250 Odense SV, Denmark

R119 – Pilot Operated Regulators

- Adapted for control by a remote or distant small pilot regulator. Ideal for maximum capacity requirements in applications where units are not readily accessible
- High flow performance featuring rugged design for the most demanding applications
- Ideal for those installations calling for constant pressure with wide variation in flow
- Diaphragm operated design with balanced poppet and constant bleed pilot for quick and accurate regulation.
- Secondary aspiration plus balanced poppet provides quick response and accurate pressure regulation
- Reverse flow available
- 1/4", 3/8", 1/2" ports (NPT, BSPP)



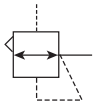

Port Size	Description (0-125 psig reduced pressure)	Part Number
1/4"	Without Gauge, Relieving, NPT	**R119-02J**
3/8"	Without Gauge, Relieving, NPT	**R119-03J**
1/2"	Without Gauge, Relieving, NPT	**R119-04J**

Operating information

Supply pressure (max):		300 psig (0 to 20.7 bar)
Air consumption:		Constant bleed from air pilot chamber: approx. 0.17 scfm (10 scfh)
Operating temperature:		40°F to 125°F (4.4°C to 52°C)
Pilot pressure:		1/4", 3/8" thread - 1/8" 1/2" thread - 1/4"
Reduced pressure range:		Adjustable to within 5 to 7 psig (0.34 to 0.48 bar) of supply pressure
Flow capacity†:		
High flow	1/4"	100 scfm (47.2 dm^3/s, ANR)
	3/8"	110 scfm (51.9 dm^3/s, ANR)
	1/2"	150 scfm (70.8 dm^3/s, ANR)
Gauge ports (2):		1/4 inch
Weight:	1/4"	1.6 lb (0.73 kg)
	3/8"	1.6 lb (0.73 kg)
	1/2"	2.6 lb (1.18 kg)

† scfm = Standard cubic feet per minute at 100 psig inlet, 75 psig no flow secondary setting and 20 psig pressure drop.

Ordering Information:

R119 – 02 J ☐ /**

Port Threads	
NPT	–
BSPP	G

Port Size	
1/4 inch	02
3/8 inch	03
1/2 inch	04

Reduced Pressure Range	
Air Pilot Operated	J

Engineering Level	
/**	Will Be Entered at Factory

Options	
Blank	None
K	Non-Relieving
X64*	Fluorocarbon O-Rings and Diaphragm
X71	Non-Bleed (for use with electronic controllers)
X7	Brass Bottom Plug

* Brass bottom plug standard with X64 option.

☐ Most popular.

Material Specifications

Body, ring, top plate	Zinc
Bottom plug	Nylon
Innervalve	Brass
Seals	Buna N

Repair and Service Kits

2" dial face 60 psig (0 to 4.1 bar), gauge	**K4520N14060**
2" dial face 160 psig (0 to 11.0 bar), gauge	**K4520N14160**
2" dial face 300 psig (0 to 20.7 bar), gauge	**K4520N14300**
1-3/4" digital round face 160 psig (0 to 11.0 bar), gauge	**K4517N14160D**
Non-relieving diaphragm, valve assembly (1/2")	**RK118X20A**
Non-relieving diaphragm, valve assembly (1/4", 3/8")	**RK118X20Y**
Relieving diaphragm, valve assembly (1/2")	**RK119X20A**
Relieving diaphragm, valve assembly (1/4", 3/8")	**RK119X20Y**

For fluorocarbon repair kits, add X64 to kit number suffix.
For non-bleed pilot repair kits, add X71 to kit number suffix.

R119-02J, R119-03J

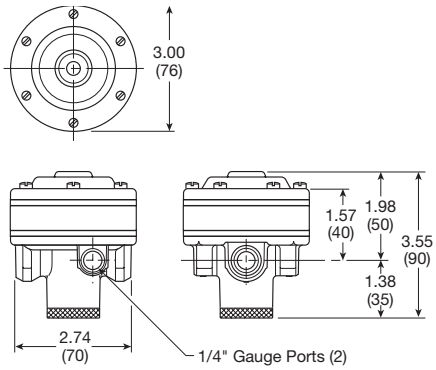

R119-04J

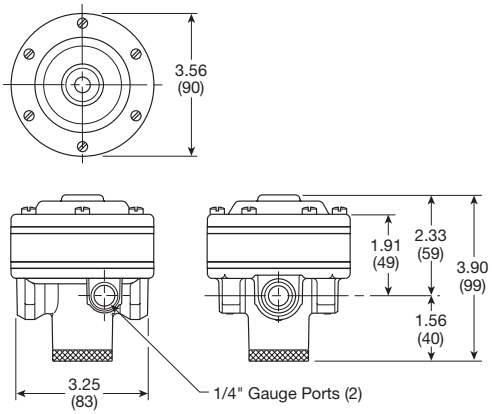

Inches (mm)

Flow Charts

R119 1/4" Regulator

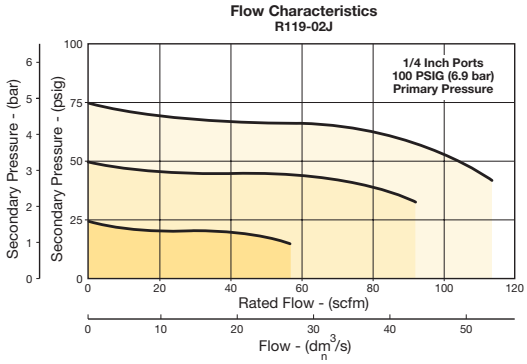

R119 3/8" Regulator

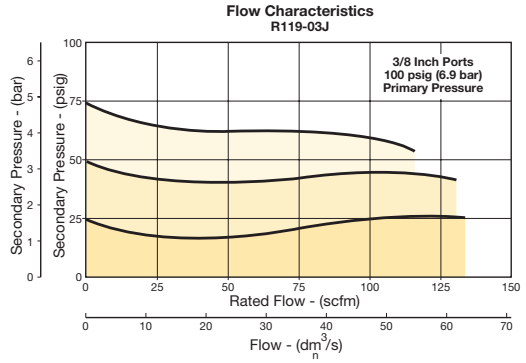

R119 1/2" Regulator

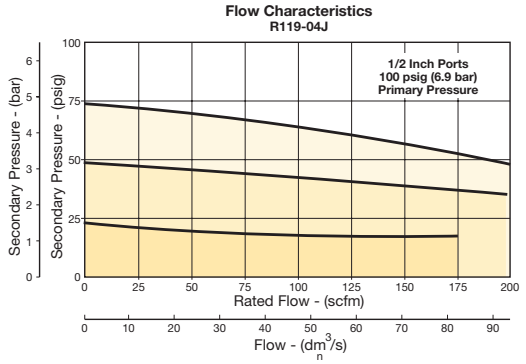

⚠ WARNING

Product rupture can cause serious injury.
Do not connect regulator to bottled gas.
Do not exceed Maximum primary pressure rating.

For inventory, lead times, and kit lookup, visit www.pdnplu.com

Parker Hannifin Corporation
Pneumatic Division
Richland, Michigan
www.parker.com/pneumatics

Tel: +45 63 12 83 00 | Email: ps@hymatik.com | www.hymatik.com | Hvidkaervej 27a, DK-5250 Odense SV, Denmark

R119 Pilot Operated Regulators - Hi-Flow

- Adapted for control by a remote or distant small pilot regulator. Ideal for maximum capacity requirements in applications where units are not readily accessible
- High flow performance featuring rugged design for the most demanding applications
- Ideal for those installations calling for constant pressure with wide variation in flow
- Diaphragm operated design with balanced poppet and constant bleed pilot for quick and accurate regulation
- Secondary aspiration plus balanced poppet provides quick response and accurate pressure regulation
- Reverse flow version available
- 3/4", 1", 1-1/2" ports (NPT, BSPP)



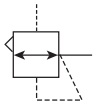

Port Size	Description (0-125 psig reduced pressure)	Part Number
3/4"	Without gauge, relieving, NPT	**R119-06J**
1"	Without gauge, relieving, NPT	**R119-08J**
1-1/2"	Without gauge, relieving, NPT	**R119-12J**

Operating information

Supply pressure (max):		300 psig (0 to 20.7 bar)
Air consumption:		Constant bleed from air pilot chamber: approx. 0.17 scfm (10 scfh)
Operating temperature:		40°F to 125°F (4.4°C to 52°C)
Reduced pressure range:		Adjustable to within 5 to 7 psig (0.34 to 0.48 bar) of supply pressure
Flow capacity†:		
High flow	3/4"	300 scfm (141.6 dm^3/s, ANR)
	1"	300 scfm (141.6 dm^3/s, ANR)
	1-1/2"	500 scfm (236 dm^3/s, ANR)
Gauge ports (2):		1/4 inch
Weight:	3/4"	5.2 lb (2.36 kg)
	1"	5.2 lb (2.36 kg)
	1-1/2"	5.6 lb (2.54 kg)

† scfm = Standard cubic feet per minute at 100 psig inlet, 75 psig no flow secondary setting and 20 psig pressure drop.

Ordering Information:

R119 – 06 J [ ] /**

Port Threads	
NPT	–
BSPP	G

Port Size	
3/4 inch	06
1 inch	08
1-1/2 inch	12

Reduced Pressure Range	
Air Pilot Operated	J

Engineering Level	
/**	Will Be Entered at Factory

Options	
Blank	None
K	Non-Relieving
X64*	Fluorocarbon O-Rings and Diaphragm
X71	Non-Bleed (for use with electronic controllers)
X80	Reverse Flow

* Brass bottom plug standard with X64 option.

☐ Most popular.

Tel: +45 63 12 83 00 | Email: ps@hymatik.com | www.hymatik.com | Hvidkaervej 27a, DK-5250 Odense SV, Denmark

Material Specifications

Body, ring, top plate	Zinc
Bottom plug, innervalve	Brass
Seals	Buna N

Repair and Service Kits

2" dial face 60 psig (0 to 4.1 bar), gauge	**K4520N14060**
2" dial face 160 psig (0 to 11.0 bar), gauge	**K4520N14160**
2" dial face 300 psig (0 to 20.7 bar), gauge	**K4520N14300**
1-3/4" digital round face 160 psig (0 to 11.0 bar), gauge	**K4517N14160D**
Non-relieving diaphragm, valve assembly (3/4", 1")	**RK118X20B**
Non-relieving diaphragm, valve assembly (1-1/4", 1-1/2")	**RK118X20D**
Relieving diaphragm, valve assembly (3/4", 1")	**RK119X20B**
Relieving diaphragm, valve assembly (1-1/4", 1-1/2")	**RK119X20D**

For Fluorocarbon Repair Kits, add X64 to Kit Number suffix.

R119-06J, R119-08J

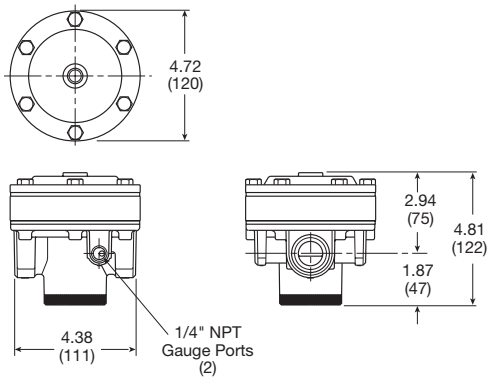

R119-12J

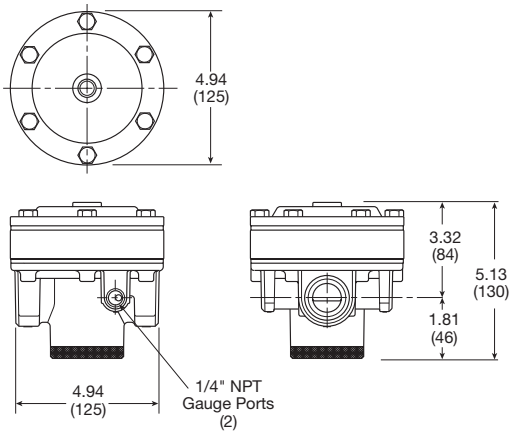

Inches (mm)

Flow Charts

R119 3/4" Regulator

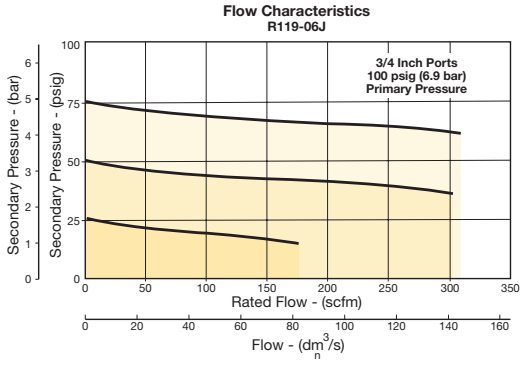

R119 1" Regulator

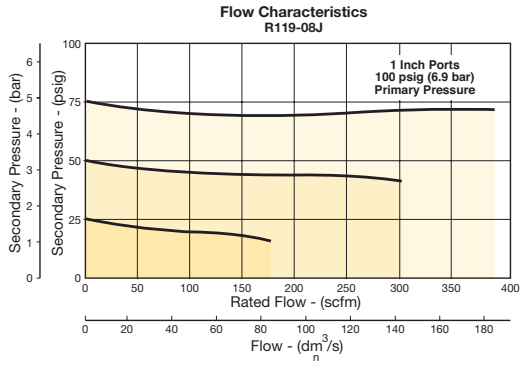

R119 1-1/2" Regulator

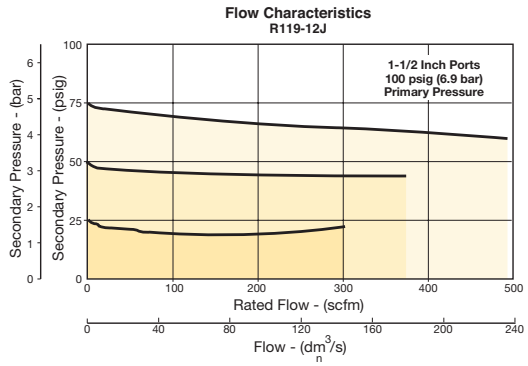

⚠ WARNING

Product rupture can cause serious injury.
Do not connect regulator to bottled gas.
Do not exceed Maximum primary pressure rating.

For inventory, lead times, and kit lookup, visit www.pdnplu.com

Parker Hannifin Corporation
Pneumatic Division
Richland, Michigan
www.parker.com/pneumatics

Tel: +45 63 12 83 00 | Email: ps@hymatik.com | www.hymatik.com | Hvidkaervej 27a, DK-5250 Odense SV, Denmark

R119 Pilot Operated Regulators - Hi-Flow

- Adapted for control by a remote or distant small pilot regulator. Ideal for maximum capacity requirements in applications where units are not readily accessible
- High flow performance featuring rugged design for the most demanding applications
- Ideal for those installations calling for constant pressure with wide variation in flow
- Piston operated design with balanced poppet and dual constant bleed for quick and accurate regulation
- 2", 2-1/2" ports (NPT, BSPP)



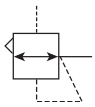

Port Size	Description (0-125 psig reduced pressure)	Part Number
2"	Without Gauge, Relieving, NPT	**R119-16J**
2-1/2"	Without Gauge, Relieving, NPT	**R119-20J**

Operating information

Supply pressure (max):		300 psig (0 to 20.7 bar)
Air consumption:		
Constant bleed from		Air pilot chamber: approx. 0.17 scfm (10 scfh)
		Reduced pressure: approx. 0.17 scfm (10 scfh)
Operating temperature:		40°F to 120°F (4.4°C to 48.9°C)
Reduced pressure range:		Adjustable to within 5 to 7 psig (0.34 to 0.48 bar) of supply pressure
Flow capacity†:		
High flow	2"	1800 scfm (850 dm^3/s, ANR)
	2-1/2"	1800 scfm (850 dm^3/s, ANR)
Gauge ports (2):		
Can be used for full flow		1/4 inch
High pressure outlet for pilot		1/4 inch
Weight:		15 lb (6.8 kg)

† scfm = Standard cubic feet per minute at 100 psig inlet, 75 psig no flow secondary setting and 20 psig pressure drop.

Ordering Information:

R119 – 16 J

Port Threads	
NPT	–
BSPP	G

Port Size	
2 inch	16
2-1/2 inch	20

Reduced Pressure Range	
J	Air Pilot Operated

NOTE: Non-relieving not available.

☐ Most popular.

Material Specifications

Body, piston	Aluminum
Seals	Buna N
Innervalve	Brass & stainless

Repair and Service Kits

2" dial face 60 psig (0 to 4.1 bar), gauge	**K4520N14060**
2" dial face 160 psig (0 to 11.0 bar), gauge	**K4520N14160**
2" dial face 300 psig (0 to 20.7 bar), gauge	**K4520N14300**
1-3/4" digital round face 160 psig (0 to 11.0 bar), gauge	**K4517N14160D**
Piston type regulation (2", 2-1/2")	**RK119G**

Flow Charts

R119 2" Regulator

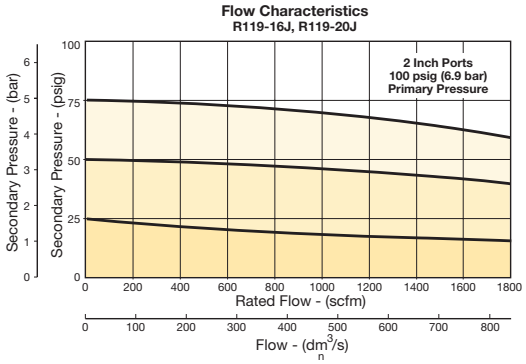

R119-16J, R119-20J

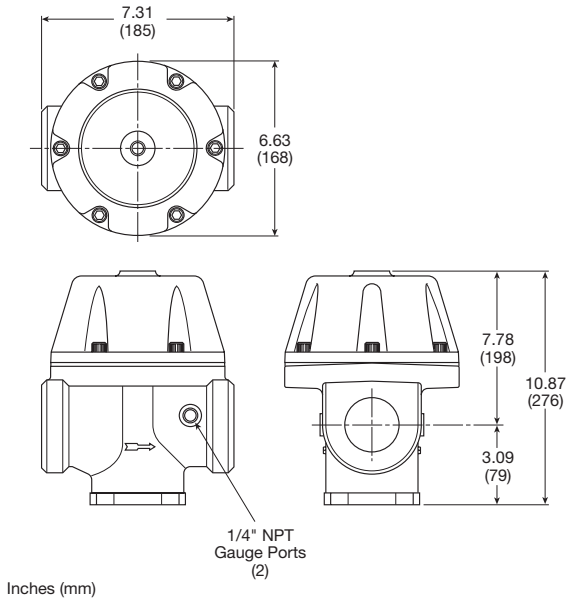

Inches (mm)

⚠ WARNING

Product rupture can cause serious injury.
Do not connect regulator to bottled gas.
Do not exceed Maximum primary pressure rating.

For inventory, lead times, and kit lookup, visit www.pdnplu.com

Parker Hannifin Corporation
Pneumatic Division
Richland, Michigan
www.parker.com/pneumatics

09R Regulators – Hi-Flow

- Piston design for reduced downtime
- High flow
- Balanced poppet for quick and accurate regulation.
- Two full flow 1/4" gauge ports which can be used as additional outlets
- Self relieving piston standard
- 2" ports (NPT)

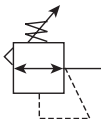



Port Size	Description	Part Number
2"	Without Gauge, Relieving	**09R813BA**

Operating information

Supply pressure (max):	300 psig (0 to 20.7 bar)
Secondary pressure range:	10 to 125 psig (0.7 to 8.6 bar) 10 to 180 psig (0.7 to 12.4 bar)
Operating temperature:	32°F to 150°F (0°C to 65.6°C)
Flow capacity†: High flow	 1000 scfm (472 dm^3/s, ANR)
Gauge ports (2):	1/4 inch (can be used as additional full flow 1/4 inch outlet ports)
Weight:	10.82 lb (53 kg)

† scfm = Standard cubic feet per minute at 100 psig inlet, 90 psig no flow secondary setting and 10 psig pressure drop.

Ordering Information:

09R	8	13	B	A

Port Threads

2 inch	8

Pressure Range

125 psig	13
180 psig	15

Relief

B	Relieving
M	Non-Relieving

Engineering Level

A	Current

☐ Most popular.

For inventory, lead times, and kit lookup, visit www.pdnplu.com

Parker Hannifin Corporation
Pneumatic Division
Richland, Michigan
www.parker.com/pneumatics

Tel: +45 63 12 83 00 | Email: ps@hymatik.com | www.hymatik.com | Hvidkaervej 27a, DK-5250 Odense SV, Denmark

Material Specifications

Adjusting stem & springs	Steel
Body	Zinc Alloy
Bonnet, piston stem, valve poppet & cap	Aluminum
Piston, cap	Plastic
Seals	Nitrile

Repair and Service Kits

Body service kit	**PS603P**
2" dial face 160 psig (0 to 11.0 bar), gauge	**K4520N14160**
2" dial face 300 psig (0 to 20.7 bar), gauge	**K4520N14300**
1-3/4" digital round face 160 psig (0 to 11.0 bar), gauge	**K4517N14160D**
Mounting bracket kit	**PS605P**
Non-relieving	**PS604P**
Relieving	**PS626P**
0 to 125 psig spring	**PS602P**
0 to 180 psig spring	**PS627**

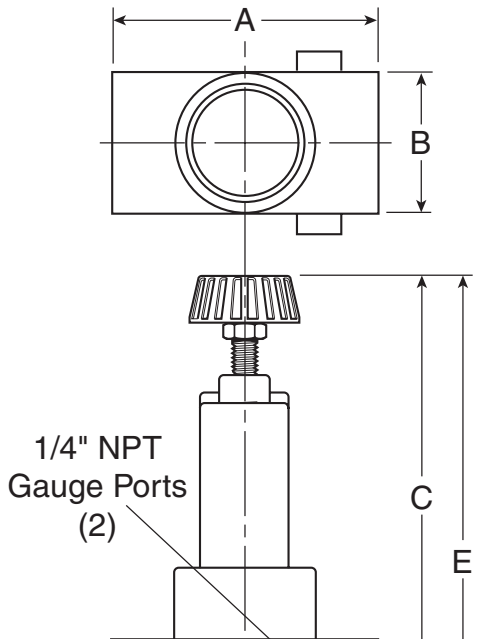

Flow Charts

09R 2" Regulator

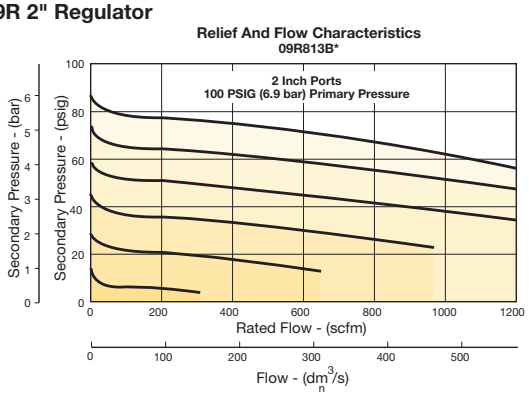

⚠ WARNING

Product rupture can cause serious injury.
Do not connect regulator to bottled gas.
Do not exceed Maximum primary pressure rating.

CAUTION:

REGULATOR PRESSURE ADJUSTMENT – The working range of knob adjustment is designed to permit outlet pressures within their full range. Pressure adjustment beyond this range is also possible because the knob is not a limiting device. This is a common characteristic of most industrial regulators, and limiting devices may be obtained only by special design. For best performance, regulated pressure should always be set by increasing the pressure up to the desired setting.

Tel: +45 63 12 83 00 | Email: ps@hymatik.com | www.hymatik.com | Hvidkaervej 27a, DK-5250 Odense SV, Denmark

L606 Lubricators – Standard

- Metal bowl with sight gauge - standard
- Polycarbonate sight dome
- Bowl can be filled while air line is under pressure
- Proportional oil delivery over a wide range of air flows
- Large capacity bowl
- Optional high capacity bowl(s) available
- Precision needle valve assures repeatable oil delivery and provides simple adjustment of delivery rate
- 3/4", 1" ports, (NPT, BSPP)





Port Size	Description	Part Number
3/4"	16 oz. Bowl with Sight Gauge, Drain	**L606-06W**
1"	16 oz. Bowl with Sight Gauge, Drain	**L606-08W**
3/4"	32 oz. Bowl without Sight Gauge, with Drain	**L606-06E**
1"	32 oz. Bowl without Sight Gauge, with Drain	**L606-08E**
3/4"	64 oz. Bowl with Sight Gauge, No Drain	**L606-06G**
1"	64 oz. Bowl with Sight Gauge, No Drain	**L606-08G**

Operating information

Supply pressure (max):
- Aluminum (E): 300 psig (20.7 bar)
- Aluminum with gauge (G): 150 psig (10.2 bar)
- Zinc with gauge (W): 250 psig (17.2 bar)

Operating temperature:
- Aluminum (E): 40°F to 150°F (4.4°C to 65.6°C)
- Aluminum with gauge (G): 40°F to 125°F (4.4°C to 52°C)
- Zinc with gauge (W): 40°F to 150°F (4.4°C to 65.6°C)

Flow capacity†:
- High flow 3/4": 325 scfm (153.4 dm^3/s, ANR)
- High flow 1": 350 scfm (165.2 dm^3/s, ANR)

Bowl capacity:
- Aluminum (E): 32 oz.
- Aluminum with gauge (G): 64 oz.
- Zinc with gauge (W): 16 oz.

Weight:
- 16 oz (W): 4.2 lb (1.91 kg)
- 32 oz (E): 5.5 lb (2.49 kg)
- 64 oz (G): 7.2 lb (3.27 kg)

† scfm = Standard cubic feet per minute at 100 psig inlet and 5 psig pressure drop.
( ) Bowl type.

Ordering Information:

L606 – 06 W [ ] /**

Port Threads

NPT	–
BSPP	G

Port Size

3/4 inch	06
1 inch	08

Bowl

32 oz. Large Capacity without Sight Gauge with Drain	E
64 oz. Large Capacity with Sight Gauge	G
16 oz. Metal with Sight Gauge with Drain	W

Options

Blank	None
H	Button Head Fill Fitting
X9*	Manual Twist Drain (increases product length by 9/16 inch)

* Standard with "E" & "W" bowl, optional with "G" bowl.

Engineering Level

/**	Will Be Entered at Factory

Suggested Lubricant .....**F442 Oil**
Petroleum based oil of 100 to 200 SUS viscosity at 100°F (38°C) and an aniline point greater than 200°F (93°C)
(DO NOT USE OILS WITH ADDITIVES, COMPOUNDED OILS CONTAINING SOLVENTS, GRAPHITE, DETERGENTS, OR SYNTHETIC OILS.)

☐ Most popular.

For inventory, lead times, and kit lookup, visit www.pdnplu.com

Parker Hannifin Corporation
Pneumatic Division
Richland, Michigan
www.parker.com/pneumatics

Tel: +45 63 12 83 00 | Email: ps@hymatik.com | www.hymatik.com | Hvidkaervej 27a, DK-5250 Odense SV, Denmark

Material Specifications

Body	Zinc
Bowl, 32 oz. (E)	Aluminum
Bowl, 64 oz. (G)	Aluminum with polycarbonate sight gauge
Bowl, 16 oz. (W)	Zinc with nylon sight gauge
Seals	Buna N

Repair and Service Kits

Adjusting knob	**606Y72**
Aluminum 32 oz bowl (E)	**BK603B**
Aluminum 64 oz bowl with sight gauge (G)	**BK606X30B**
Zinc 16 oz bowl with sight gauge (W)	**BK609WB**
Button head fill fitting (M14 male thread)	**L606C14**
Dip tube kit	**DTK606**
Drip spout kit	**RK606SY**
Mounting bracket, 3/4 Inch (2 required per unit)	**SA200AW57**
Mounting bracket, 1 Inch units (2 required per unit)	**SA200CW57**
Needle valve assembly (All)	**RK606Y**
Sight glass repair kit (W)	**RKB605WB**
Sight glass repair kit (G)	**RKB606X30B**
Oil (1 quart)	**F442001**
Oil (1 gallon)	**F442002**
Oil (12 quart case)	**F442003**
Oil (4 gallon case)	**F442005**

Flow Charts

L606 3/4" Lubricator

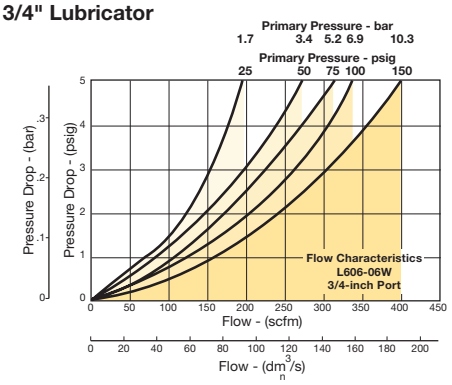

L606 1" Lubricator

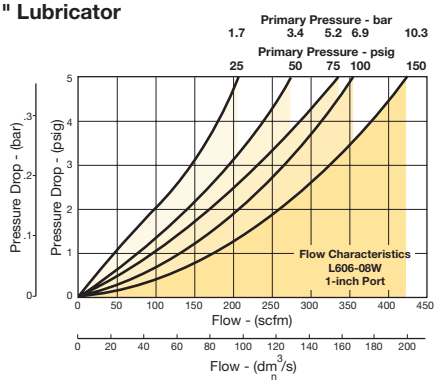

L606 - 3/4" and 1"

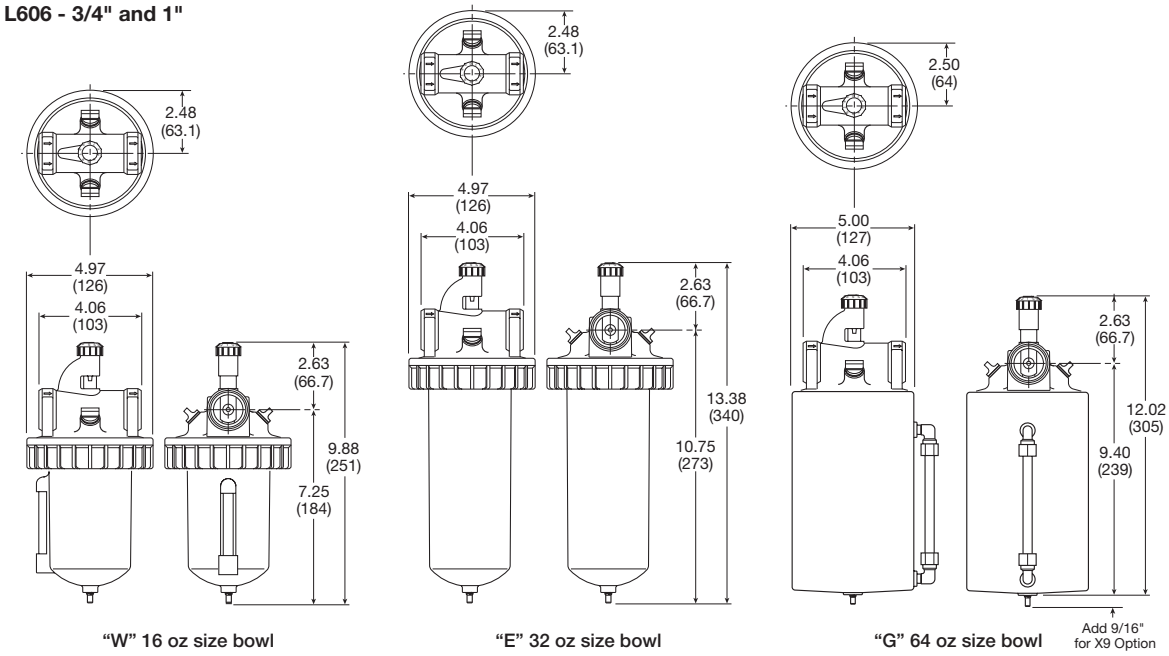

"W" 16 oz size bowl "E" 32 oz size bowl "G" 64 oz size bowl

Inches (mm)

For inventory, lead times, and kit lookup, visit www.pdnplu.com

Parker Hannifin Corporation
Pneumatic Division
Richland, Michigan
www.parker.com/pneumatics

Tel: +45 63 12 83 00 | Email: ps@hymatik.com | www.hymatik.com | Hvidkaervej 27a, DK-5250 Odense SV, Denmark

L606 Lubricators – Standard

- Metal bowl with sight gauge - standard
- Polycarbonate sight dome
- Bowl can be filled while air line is under pressure
- Proportional oil delivery over a wide range of air flows
- Large capacity bowl
- Optional high capacity bowl(s) available
- Precision needle valve assures repeatable oil delivery and provides simple adjustment of delivery rate
- 1-1/2" ports (NPT, BSPP)





Port Size	Description	Part Number
1-1/2"	16 oz. Bowl with Sight Gauge, Drain	**L606-12W**
1-1/2"	32 oz. Bowl without Sight Gauge, with Drain	**L606-12E**
1-1/2"	64 oz. Bowl with Sight Gauge, No Drain	**L606-12G**

Operating information

Supply pressure (max):		
Aluminum (E)		300 psig (20.7 bar)
Aluminum with gauge (G)		150 psig (10.2 bar)
Zinc with gauge (W)		250 psig (17.2 bar)
Operating temperature:		
Aluminum (E)		40°F to 150°F (4.4°C to 65.6°C)
Aluminum with gauge (G)		40°F to 125°F (4.4°C to 52°C)
Zinc with gauge (W)		40°F to 150°F (4.4°C to 65.6°C)
Flow capacity†:		
High flow	1-1/2"	400 scfm (188.8 dm^3/s, ANR)
Bowl capacity:		
Aluminum (E)		32 oz.
Aluminum with gauge (G)		64 oz.
Zinc with gauge (W)		16 oz.
Weight:	16 oz	7.5 lb (3.40 kg)
	32 oz	8.3 lb (3.76 kg)
	64 oz	10.0 lb (4.54 kg)

† scfm = Standard cubic feet per minute at 100 psig inlet and 5 psig pressure drop.
( ) Bowl type.

Ordering Information:

L606 – 12 W [ ] /**

Port Threads

NPT	–
BSPP	G

Port Size

1-1/2 inch	12

Bowl

32 oz. Large Capacity without Sight Gauge with Drain	E
64 oz. Large Capacity with Sight Gauge	G
16 oz. Metal with Sight Gauge with Drain	W

Options

Blank	None
H	Button Head Fill Fitting
X9*	Manual Twist Drain (increases product length by 9/16 inch)

* Standard with "E" & "W" bowl, optional with "G" bowl.

Engineering Level

/**	Will Be Entered at Factory

Suggested Lubricant .....**F442 Oil**
Petroleum based oil of 100 to 200 SUS viscosity at 100°F (38°C) and an aniline point greater than 200°F (93°C)
(DO NOT USE OILS WITH ADDITIVES, COMPOUNDED OILS CONTAINING SOLVENTS, GRAPHITE, DETERGENTS, OR SYNTHETIC OILS.)

☐ Most popular.

For inventory, lead times, and kit lookup, visit www.pdnplu.com

Parker Hannifin Corporation
Pneumatic Division
Richland, Michigan
www.parker.com/pneumatics

Tel: +45 63 12 83 00 | Email: ps@hymatik.com | www.hymatik.com | Hvidkaervej 27a, DK-5250 Odense SV, Denmark

Material Specifications

Body	Zinc
32 oz. bowl (E)	Aluminum
64 oz. bowl (G)	Aluminum with polycarbonate sight gauge
16 oz. bowl (W)	Zinc with nylon sight gauge
Seals	Buna N

Repair and Service Kits

Adjusting knob	**606Y72**
Aluminum 32 oz. bowl (E)	**BK603B**
Aluminum 64 oz. bowl with sight gauge (G)	**BK606X30B**
Zinc 16 oz. bowl with sight gauge (W)	**BK609WB**
Button head fill fitting (M14 male thread)	**L606C14**
Dip tube kit	**DTK606**
Drip spout kit	**RK606SY**
Needle valve assembly (All)	**RK606Y**
Sight glass repair kit (W)	**RKB605WB**
Sight glass repair kit (G)	**RKB606X30B**
Oil (1 quart)	**F442001**
Oil (1 gallon)	**F442002**
Oil (12 quart case)	**F442003**
Oil (4 gallon case)	**F442005**

Flow Charts

L606 1-1/2" Lubricator

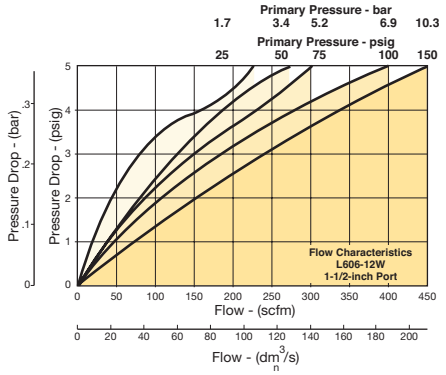

L606 - 1-1/2"

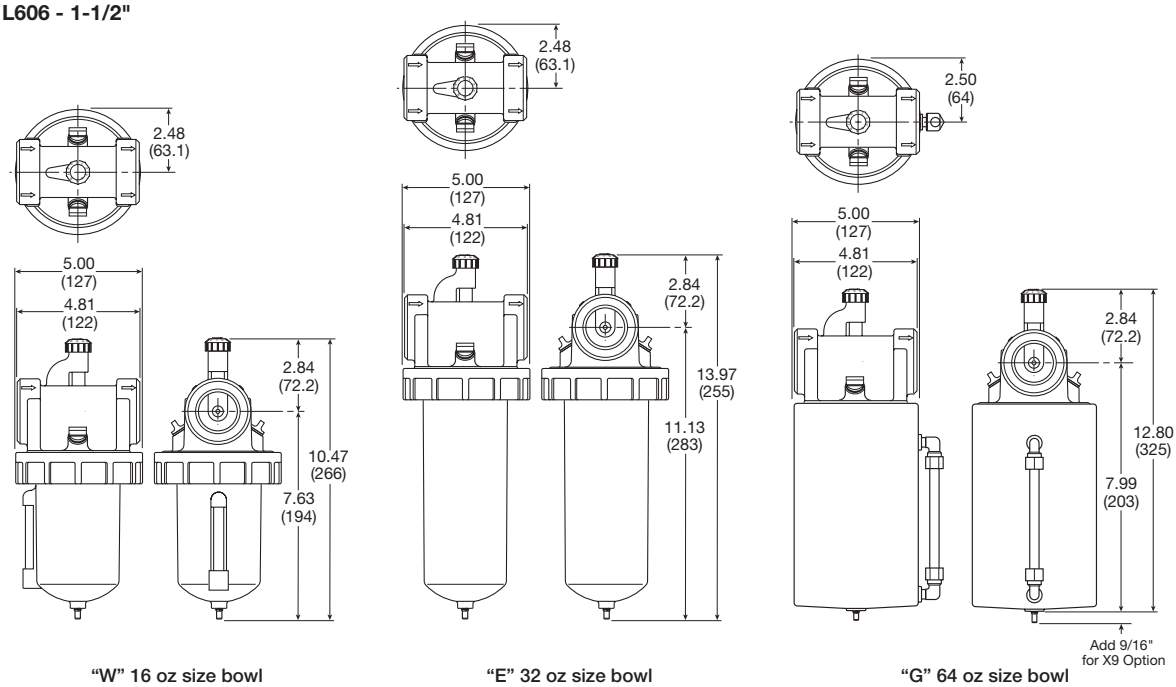

"W" 16 oz size bowl "E" 32 oz size bowl "G" 64 oz size bowl

Inches (mm)

For inventory, lead times, and kit lookup, visit www.pdnplu.com

Parker Hannifin Corporation
Pneumatic Division
Richland, Michigan
www.parker.com/pneumatics

Tel: +45 63 12 83 00 | Email: ps@hymatik.com | www.hymatik.com | Hvidkaervej 27a, DK-5250 Odense SV, Denmark

09L Mist Lubricators – Hi-Flow

- Metal bowl with sight gauge and manual drain – standard
- Transparent sight dome for 360° visibility
- Bowl can be filled while air line is under pressure
- Proportional oil delivery over a wide range of air flows
- 2" ports (NPT)





Port Size	Description	Part Number
2"	Metal Bowl, Sight Gauge, 1 Quart	**09L84BA**
2"	Metal Bowl, Sight Gauge, 3 Quart	**09L8PBA**

Operating information

Supply pressure (max):		150 psig (10.3 bar)
Operating temperature:		32°F to 150°F (0°C to 66°C)
Flow capacity†:		
High flow	2"	1000 scfm (472 dm^3/s, ANR)
Minimum flow		6.6 scfm at 100 psig
Bowl capacity:		1 qt. (standard)
Weight:	1 qt	10.2 lb (4.6 kg)
	3 qt	13.7 lb (6.2 kg)

† scfm = Standard cubic feet per minute at 90 psig inlet and 5 psig pressure drop.

Ordering Information:

09L	8	4	B	A	

Port Size

2 inch	8

Bowl Options

Metal Bowl, 1 Quart, Sight Gauge / Manual Drain	4
Metal Bowl, 3 Quart, Sight Gauge / Manual Drain	P

Options

B	Without Tamperproof Cap

Engineering Level

A	Current

Port Type

Blank	NPT

Suggested Lubricant ..... **F442 Oil**
Petroleum based oil of 100 to 200 SUS viscosity at 100°F (38°C) and an aniline point greater than 200°F (93°C)
(DO NOT USE OILS WITH ADDITIVES, COMPOUNDED OILS CONTAINING SOLVENTS, GRAPHITE, DETERGENTS, OR SYNTHETIC OILS.)

☐ Most popular.

For inventory, lead times, and kit lookup, visit www.pdnplu.com

Parker Hannifin Corporation
Pneumatic Division
Richland, Michigan
www.parker.com/pneumatics

Tel: +45 63 12 83 00 | Email: ps@hymatik.com | www.hymatik.com | Hvidkaervej 27a, DK-5250 Odense SV, Denmark

Material Specifications

Body	Zinc alloy, die cast

Repair and Service Kits

Fill cap kit	**PS610P**
Lubricator service kit	**PS607P**
Metal bowl, 1 quart, sight gauge / twist drain	**PS612P**
Sight dome kit	**PS613P**
Oil (1 quart)	**F442001**
Oil (1 gallon)	**F442002**
Oil (12 quart case)	**F442003**
Oil (4 gallon case)	**F442005**

Flow Charts

09L 2" Lubricator

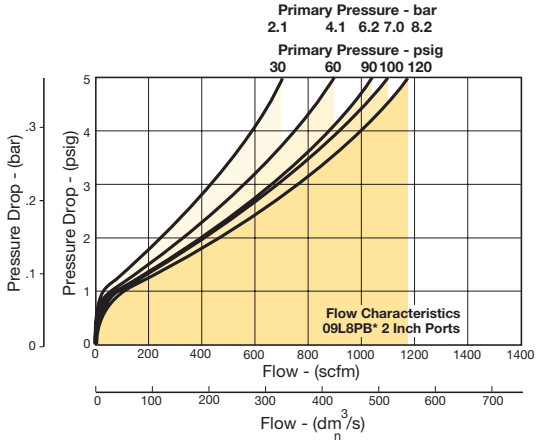

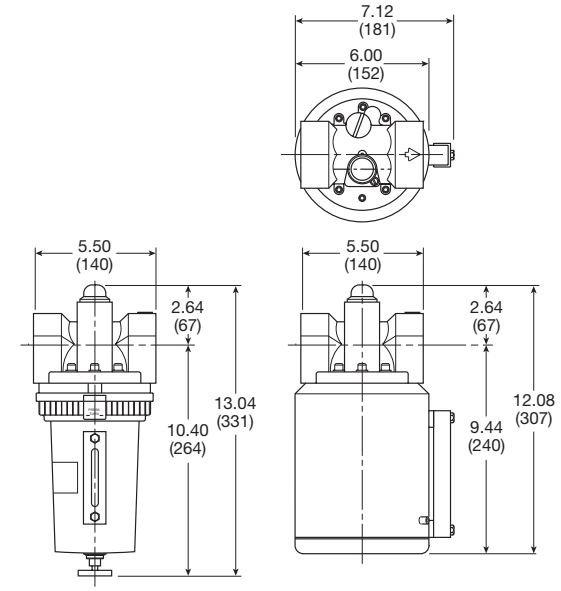

Inches (mm)

1 Quart **3 Quart**

For inventory, lead times, and kit lookup, visit www.pdnplu.com

Parker Hannifin Corporation
Pneumatic Division
Richland, Michigan
www.parker.com/pneumatics

Tel: +45 63 12 83 00 | Email: ps@hymatik.com | www.hymatik.com | Hvidkaervej 27a, DK-5250 Odense SV, Denmark

C628 General Industrial Combinations – Standard

- 40 micron filter element
- Gauges included on combinations
- Manual twist drain
- Relieving regulator

C628 Standard Combinations

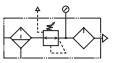



Port Size	Bowl Type	Bowl Capacity	Element Type	Part Number
3/4"	Metal / Sight Gauge	16 oz	40 micron	**C628-06FRLWJCW**
3/4"	Metal / Without Sight Gauge	32 oz	40 micron	**C628-06FRLEJCE**
1"	Metal / Sight Gauge	16 oz	40 micron	**C628-08FRLWJCW**
1"	Metal / Without Sight Gauge	32 oz	40 micron	**C628-08FRLEJCE**
1-1/2"	Metal / Sight Gauge	16 oz	40 micron	**C628-12FRLWJCW**
1-1/2"	Metal / Without Sight Gauge	32 oz	40 micron	**C628-12FRLEJCE**

Ordering Information:

C628 – 06 FRL W J C W ☐

Port Size	
3/4 inch	06
1 inch	08
1-1/2 inch	12

Filter Bowl Options	
32 oz. Large Capacity w/o Sight Gauge	E
16 oz. Metal w/ Sight Gauge	W

Filter Element	
5 Micron	G
40 Micron	J

Regulator Reduced Pressure Range	
C	0 to 125 psig
D	0 to 250 psig

Lubricator Body Options	
E	32 oz. Large Capacity w/o Sight Gauge
W	16 oz. Metal w/ Sight Gauge

Drains and Options*	
H	Button Head Fill Fitting (lubricator)
K	Non-Relieving Regulator
Q	External Heavy Duty Auto Drain (filter)
R	Internal Auto Drain (filter)
X9	Manual Twist Drain on Lubricator (increases product length by 9/16 inch)

* Filter comes standard with manual drain, lubricator comes standard with no drain.

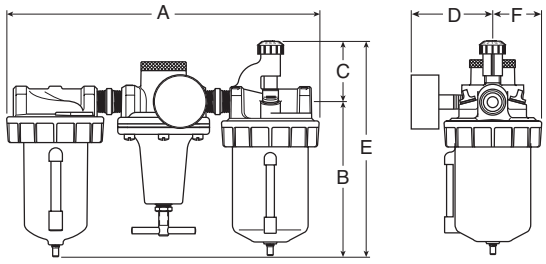

A	B	C	D	E	F
C628-06FRL, C628-08FRL					
15.75 (400)	7.75 (197)	2.63 (67)	3.52 (89)	13.00 (330)	2.48 (63)
C628-12FRL					
16.50 (419)	8.13 (206)	2.84 (72)	3.86 (98)	14.13 (359)	2.64 (67)

Inches (mm), All dimensions nominal.

⚠ WARNING
Product rupture can cause serious injury.
Do not connect regulator to bottled gas.
Do not exceed maximum primary pressure rating.

CAUTION:
REGULATOR PRESSURE ADJUSTMENT –
The working range of knob adjustment is designed to permit outlet pressures within their full range. Pressure adjustment beyond this range is also possible because the knob is not a limiting device. This is a common characteristic of most industrial regulators, and limiting devices may be obtained only by special design. For best performance, regulated pressure should always be set by increasing the pressure up to the desired setting.

☐ Most popular.

For inventory, lead times, and kit lookup, visit www.pdnplu.com

Parker Hannifin Corporation
Pneumatic Division
Richland, Michigan
www.parker.com/pneumatics

Tel: +45 63 12 83 00 | Email: ps@hymatik.com | www.hymatik.com | Hvidkaervej 27a, DK-5250 Odense SV, Denmark



Air Preparation Products
Miniature / Inline

Filters

02F	J2-J3
P31FB	J4-J5
14F	J6-J7

Coalescing Filters

02F	J8-J9
P31F	J10-J11
10F	J12-J13
15F	J14-J15

Regulators

P31R	J16-J17
14R	J18-J19
P3A-R	J20-J21
R34	J22-J23
R25	J24-J25
R45	J26-J27
15R	J28-J29

Filter / Regulators

P31EB	J30-J31
B34	J32-J33
14E	J34-J35
05E	J36-J37

Lubricators

02L	J38-J39
P31LB	J40-J41
04L	J42-J43

Tel: +45 63 12 83 00 | Email: ps@hymatik.com | www.hymatik.com | Hvidkaervej 27a, DK-5250 Odense SV, Denmark

02F Particulate Filters – Miniature

Application

This small, aluminum in-line filter is designed to provide protection for portable pneumatic hand tools. It weighs only 2 ounces with a throw-away filter element rated at 5 micron. Either port may be used as the inlet port. Flow is 17 scfm at 90 psig inlet pressure with 5 psig pressure drop.

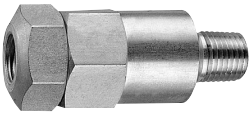



Port Size	Description	Part Number
1/4"	Inline Filter	**02F1BA**

Operating information

Supply pressure (max):	200 psig (13.8 bar)
Operating temperature:	32°F to 150°F (0°C to 65.6°C)
Flow capacity†:	17 scfm (8 dm^3/s, ANR)
Standard Filtration*:	5 micron
Weight:	0.13 lb (0.06 kg)

† Inlet pressure 90 psig (6.2 bar). Pressure drop 5 psid (0.3 bar).

* "F" Series Filters, Type "A" 5 micron elements: All Parker 5 micron elements meet or exceed ISO Class 3 for maximum particle size and concentration of solid contaminants.

☐ Most popular.

Tel: +45 63 12 83 00 | Email: ps@hymatik.com | www.hymatik.com | Hvidkaervej 27a, DK-5250 Odense SV, Denmark

Material Specifications

Body	Aluminum
Baffle	Aluminum
Filter element	Sintered polyethylene
Seals	Nitrile

Repair and Service Kits

5 Micron	**PS436**

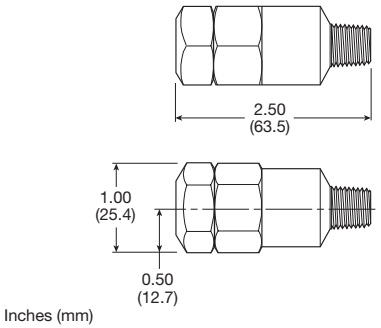

Inches (mm)

Flow Charts

1/4" Filter

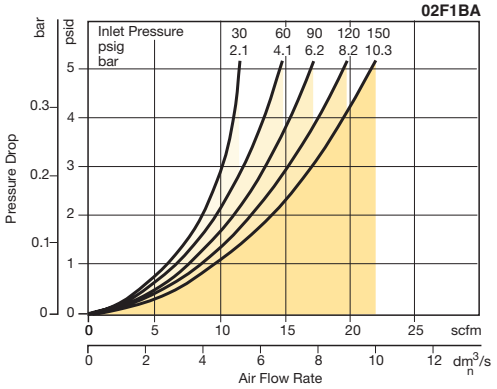

Tel: +45 63 12 83 00 | Email: ps@hymatik.com | www.hymatik.com | Hvidkaervej 27a, DK-5250 Odense SV, Denmark

P31 Particulate Filter – Mini

- Integral 1/4" ports (NPT, BSPP & BSPT)
- High efficiency 5 micron element as standard
- Excellent water removal efficiency
- Robust but lightweight aluminum construction
- One hand operation for easy element cartridge removal
- Positive bayonet latch to ensure correct & safe fitting

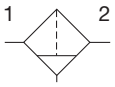

Manual drain

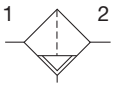

Pulse drain



Port Size	Description	Part Number
1/4"	Poly Bowl, Manual Drain	**P31FB92EGMN**
1/4"	Poly Bowl, Pulse Drain	**P31FB92EGBN**
1/4"	Metal Bowl, Manual Drain	**P31FB92EMMN**
1/4"	Metal Bowl, Pulse Drain	**P31FB92EMBN**

Operating information

Supply pressure (max):	
Plastic bowl	150 psig (10 bar)
Metal bowl	250 psig (17 bar)
Operating temperature:	
Plastic bowl	14°F to 125°F (-10°C to 52°C)
Metal bowl	14°F to 150°F (-10°C to 65.5°C)
Standard filtration:	5 micron
Flow capacity*:	25 scfm (12 dm^3/s, ANR)
Useful retention†:	0.4 US oz. (12 cm^3)
Weight:	0.24 lb (0.11 kg)

* Inlet pressure 91.3 psig (6.3 bar). Pressure drop 4.9 psig (0.34 bar).
† Useful retention refers to volume below the quiet zone baffle.

Air quality:
Within ISO 8573-1: 1991 Class 3 (Particulates)
Within ISO 8573-1: 2001 Class 6 (Particulates)

Ordering Information:

P31FB 9 2 E G M N

Basic Series	
Global Modular Mini Particulate Filter	P31FB

Thread type	
BSPP	1
BSPT	2
NPT	9

Port size	
1/4	2

Element	
5µ Element	E

Bowl type	
G	Poly Bowl With Bowl Guard
M	Metal Bowl Without Sight Gauge

Drain Type	
M	Manual Drain
B	Pulse Drain
X	Flex Drain

Mounting	
N	No Bracket

☐ Most popular.

Tel: +45 63 12 83 00 | Email: ps@hymatik.com | www.hymatik.com | Hvidkaervej 27a, DK-5250 Odense SV, Denmark

Material Specifications

Body	Aluminum
Body cap	ABS
Plastic bowl	Polycarbonate
Metal bowl	Aluminum
Bowl guard	Nylon
Element retainer	Acetal
Baffle	Acetal
Filter element	Sintered polyethylene
Seals	Nitrile

Repair and Service Kits

Plastic bowl / bowl guard, manual drain	**P31KB00BGM**
Metal bowl / w/o sight gauge, manual drain	**P31KB00BMM**
Plastic bowl / bowl guard, pulse drain	**P31KB00BGB**
Metal bowl / w/o sight gauge, pulse drain	**P31KB00BMB**
5µ particle filter element	**P31KA00ESE**
C-bracket (fits to body)	**P31KA00MW**
T-bracket with body connector	**P31KA00MT**
Body connector	**P31KA00CB**

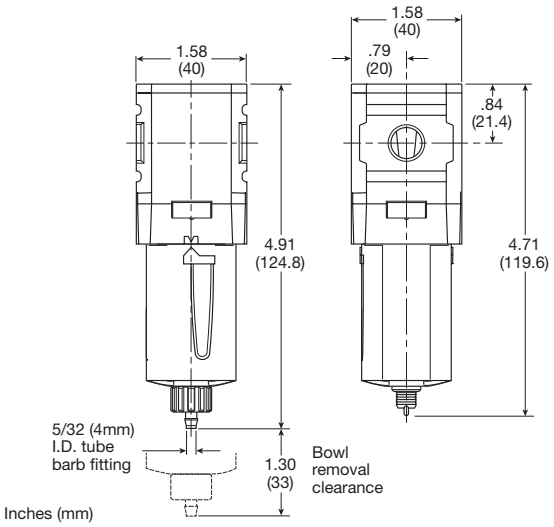

Manual Drain **Pulse Drain**

Flow Charts

P31 1/4 Particulate Filter

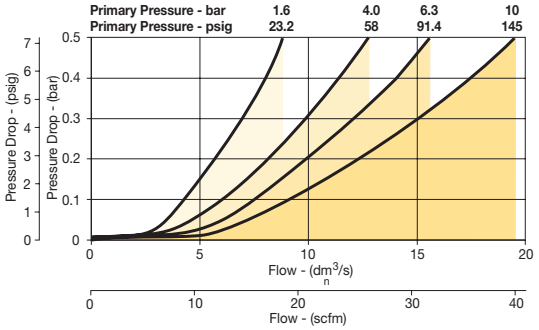

For inventory, lead times, and kit lookup, visit www.pdnplu.com

Parker Hannifin Corporation
Pneumatic Division
Richland, Michigan
www.parker.com/pneumatics

Tel: +45 63 12 83 00 | Email: ps@hymatik.com | www.hymatik.com | Hvidkaervej 27a, DK-5250 Odense SV, Denmark

14F Particulate Filters – Miniature

- Excellent water removal efficiency
- Unique deflector plate that creates swirling of the air stream ensuring maximum water and dirt separation
- Easily disassembled for servicing without the use of tools
- 5 micron element standard
- Interchangeable twist and automatic pulse drains
- 1/8" & 1/4" ports (NPT, BSPP & BSPT)

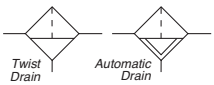



Port Size	Description ‡	Part Number
1/8"	Poly Bowl, Twist Drain	**14F01BB**
1/8"	Metal Bowl, Twist Drain	**14F03BB**
1/8"	Poly Bowl, Auto Pulse Drain	**14F05BB**
1/8"	Metal Bowl, Auto Pulse Drain	**14F07BB**
1/4"	Poly Bowl, Twist Drain	**14F11BB**
1/4"	Metal Bowl, Twist Drain	**14F13BB**
1/4"	Poly Bowl, Auto Pulse Drain	**14F15BB**
1/4"	Metal Bowl, Auto Pulse Drain	**14F17BB**

‡ For polycarbonate bowl, see caution in Engineering Section A.

Operating information

Supply pressure (max):		
Plastic bowl		0 to 150 psig (0 to 10.3 bar)
Metal bowl		0 to 250 psig (0 to 17.2 bar)
Auto pulse drain		10 to 250 psig (0.7 to 17.2 bar)
Operating temperature:		
Plastic bowl		32°F to 125°F (0°C to 52°C)
Metal bowl		32°F to 175°F (0°C to 80°C)
Auto pulse drain		125°F (52°C) or less
Flow capacity†:		
High flow	1/8"	22 scfm (10.4 dm^3/s, ANR)
	1/4"	24 scfm (11.3 dm^3/s, ANR)
Bowl capacity:		1 oz.
Auto pulse drain tube barb		1/8 inch
Weight:		0.41 lb (0.18 kg)

† scfm = Standard cubic feet per minute at 90 psig inlet and 5 psig pressure drop.

Ordering Information:

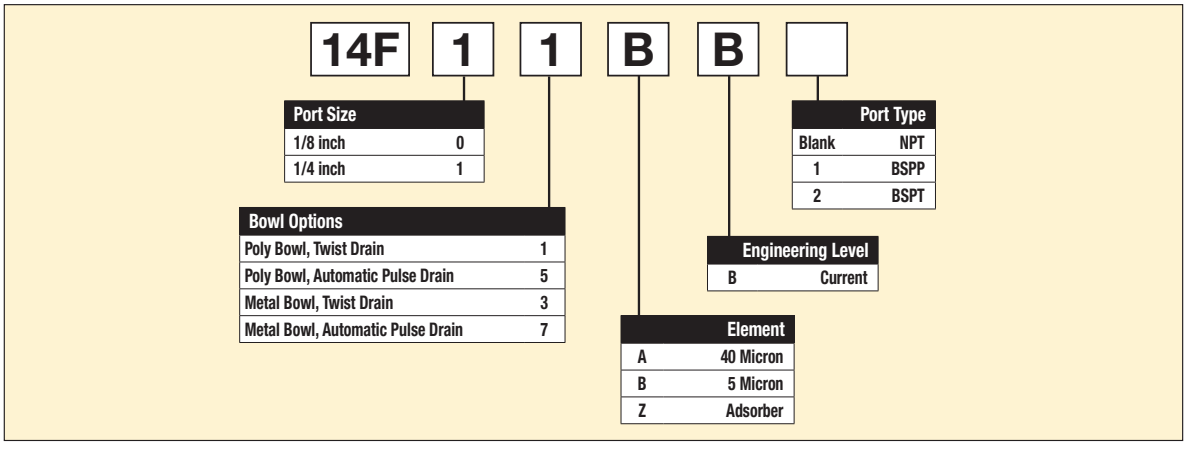

☐ Most popular.

Tel: +45 63 12 83 00 | Email: ps@hymatik.com | www.hymatik.com | Hvidkaervej 27a, DK-5250 Odense SV, Denmark

Material Specifications

Body	Zinc
Transparent bowl	Polycarbonate
Metal bowl without sight gauge	Zinc
Deflector, element holder & baffle	Plastic
Twist drain, body & stem	Plastic
Twist drain, seals	Nitrile
Auto pulse drain, piston & seals	Nitrile
Auto pulse drain, stem, seat, adaptor & washers	Aluminum
Element	Plastic
Adsorber (optional)	Activated charcoal
Seals	Nitrile

Repair and Service Kits

Poly bowl / auto pulse drain	**PS408BP**
Poly bowl / twist drain	**PS404P**
Metal bowl / auto pulse drain	**PS451BP**
Metal bowl / twist drain	**PS447BP**
40 Micron element	**PS401P**
5 Micron element	**PS403P**
5 Micron cartridge kit	**PS407P**
Adsorber element	**PS452P**
Mounting bracket kit	**PS417BP**

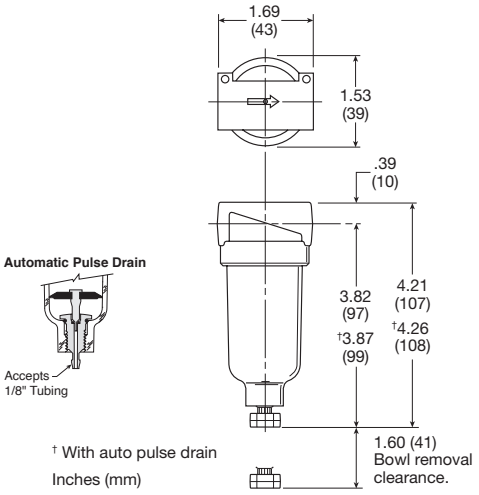

Flow Charts

14F 1/8" Particulate Filter

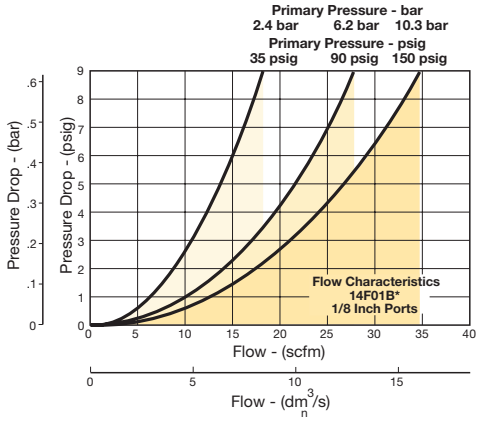

14F 1/4" Particulate Filter

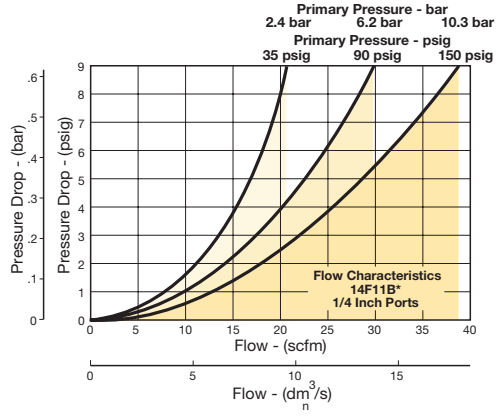

Tel: +45 63 12 83 00 | Email: ps@hymatik.com | www.hymatik.com | Hvidkaervej 27a, DK-5250 Odense SV, Denmark

02F Coalescing Filters – Miniature

- Clear nylon housing.
- Full length support tube.
- Positive tube seals.
- Optional filter grades available.
- Disposable.



Application

The 02F Miniature Inline Filter is designed to remove 99.9%+ of the aerosols and sub-micron particles from your air system.

Port Size	Element	Part Number
1/4" I.D.	Grade 6 (0.01 micron)	**02FA06A**
	Grade 10 (1.0 micron)	**02FA10A**
	Grade 6 (oil activated dye)	**02FA22A**

Operating information

Pressure & temperature:		100 psig at 125°F (0.69 bar at 52°C) or less
High flow†:	Grade 6 Grade 10	3.5 scfm (1.65 dm^3/s, ANR) 5.3 scfm (2.50 dm^3/s, ANR)
Port size:		1/4 I.D. hose slip on tang standard

† scfm @ 1 psid operating pressure 100 psig.

Ordering Information:

02F **A** **06** **A**

Port Size	
Standard	A

Engineering Level	
A	Current

Elements	
Grade 6	06
Grade 10	10
Grade 6 Oil Activated Dye	22

Tel: +45 63 12 83 00 | Email: ps@hymatik.com | www.hymatik.com | Hvidkaervej 27a, DK-5250 Odense SV, Denmark

Material Specifications

Element	Borosilicate & Felt Glass Fibers
Housing	Nylon

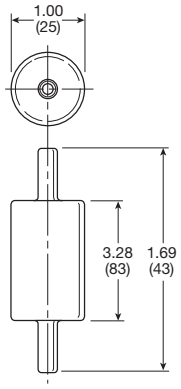

Inches (mm)

Operation

The contaminated air enters the filters interior and is forced through the elements membrane of Borosilicate glass fibers. Contaminants and aerosols are collected and distributed evenly along the entire tubes length. This is accomplished by the use of the “center post” which not only provides this “drop out pocket”, but also provides a stable support.

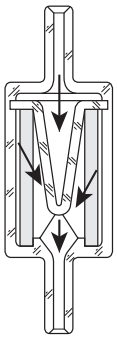

P31 Coalescing and Adsorber Filters – Mini

- Integral 1/4" ports (NPT, BSPP & BSPT)
- Removes liquid aerosols and sub micron particles
- Oil free air for critical applications, such as air gauging, pneumatic instrumentation and control
- Differential Pressure Indicator (DPI) standard on coalescing filters
- Positive bayonet latch to ensure correct and safe fitting
- Adsorbing activated carbon element removes oil vapors and most hydrocarbons



Note: **To optimize the life of coalescing element, it is advisable to install a P31F pre-filter with a 5 micron element upstream of the coalescing filter.**

To optimize the life of an Adsorber it is advisable to install a P31 Coalescing Filter upstream of the Adsorber. Adsorber element should be replaced approximately every 1000 hours of service.

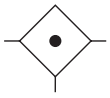

Port Size	Description	Element	Part Number
1/4"	Poly Bowl, Manual Drain	0.01 micron	**P31FB92DGMN**
1/4'	Poly Bowl, Pulse Drain	0.01 micron	**P31FB92DGBN**
1/4"	Metal Bowl, Manual Drain	0.01 micron	**P31FB92DMMN**
1/4'	Metal Bowl, Pulse Drain	0.01 micron	**P31FB92DMBN**

Operating information

Supply pressure (max):	
Poly bowl	150 psig (10 bar)
Metal bowl w/ DPI	150 psig (10 bar)
Metal bowl w/o DPI	250 psig (17 bar)
Operating temperature:	
Plastic bowl	14°F to 125°F (-10°C to 52°C)
Metal bowl	14°F to 150°F (-10°C to 65.5°C)
Standard filtration:	1.0 and 0.01 micron
Adsorber	Max. oil carryover (ppm w/w) 0.003 @ 70°F (21°C)
Flow capacity*:	
1.0 micron coalescing	12 scfm (5.5 dm^3/s, ANR)
0.01 micron coalescing	7.5 scfm (3.6 dm^3/s, ANR)
Activated carbon adsorber	12.7 scfm (6 dm^3/s, ANR)
Useful retention†:	0.4 US oz. (12 cm^3)
Weight:	0.24 lb (0.11 kg)

* Inlet pressure 91.3 psig (6.3 bar). Pressure drop 3 psig (0.2 bar), saturated element.
† Useful retention refers to volume below the quiet zone baffle.

Ordering Information:

P31FB 9 2 D G M N

Basic Series	
Global Modular Mini Coalescing Filter	P31FB

Thread Type	
BSPP	1
BSPT	2
NPT	9

Port Size	
1/4	2

Element	
0.01µ Element	C
0.01µ Element with DPI	D
1µ Element	9
1µ Element with DPI	Q
Adsorber	A

Bowl Type	
G	Poly Bowl With Bowl Guard
M	Metal Bowl Without Sight Gauge

Drain Type	
B	Pulse Drain
M	Manual Drain
X	Flex Drain

Mounting	
N	No Bracket

☐ Most popular.

Tel: +45 63 12 83 00 | Email: ps@hymatik.com | www.hymatik.com | Hvidkaervej 27a, DK-5250 Odense SV, Denmark

Material Specifications

Body	Aluminum
Body cap	ABS
Plastic bowl	Polycarbonate
Metal bowl	Aluminum
Filter element	Borosilicate cloth
Adsorber element	Activated carbon
Seals	Nitrile

Repair and Service Kits

Plastic bowl / bowl guard, manual drain	**P31KB00BGM**
Metal bowl / w/o sight gauge ,manual drain	**P31KB00BMM**
Plastic bowl / bowl guard, pulse drain	**P31KB00BGB**
Metal bowl / w/o sight gauge, pulse drain	**P31KB00BMB**
1µ coalescing filter element	**P31KA00ES9**
0.01µ coalescing filter element	**P31KA00ESC**
Activated carbon adsorber filter element	**P31KA00ESA**
C-bracket (fits to body)	**P31KA00MW**
T-bracket with body connector	**P31KA00MT**
Body connector	**P31KA00CB**
Differential pressure indicator (replacement)	**P31KB00RQ**

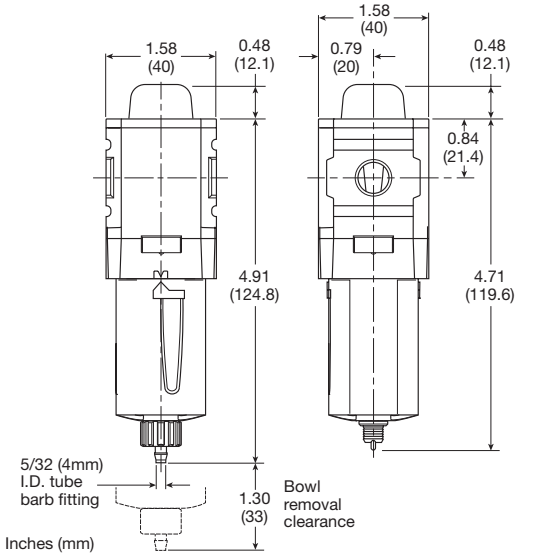

Manual Drain **Pulse Drain**

Flow Charts

P31 - 1.0 micron flow Coalescing Filter

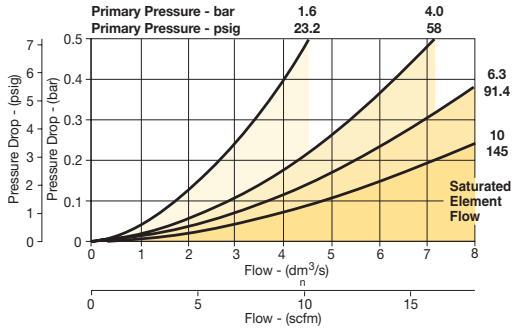

P31 - 0.01 micron flow Coalescing Filter

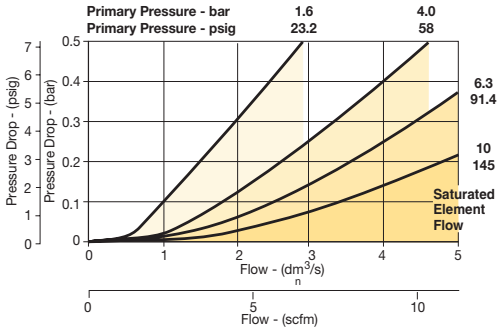

For inventory, lead times, and kit lookup, visit www.pdnplu.com

Parker Hannifin Corporation
Pneumatic Division
Richland, Michigan
www.parker.com/pneumatics

10F Coalescing Filters – Miniature

- Removes liquid aerosols and sub-micron particles.
- Liquids gravitate to the bottom of the element and will not re-enter the airstream.
- Oil free air for critical applications, such as air gauging and pneumatic instrumentation and controls.
- Interchangeable twist and automatic pulse drains.
- Grade 6 element, 99.97% DOP efficiency
- 1/8", 1/4" ports (NPT, BSPP, BSPT)



Note: **To optimize the life of coalescing element, it is advisable to install a pre-filter with a 5 micron element upstream of the coalescing filter.**

To optimize the life of an adsorber it is advisable to install a coalescing filter upstream of the adsorber. Adsorber element should be replaced approximately every 1000 hours of service.



Port Size	Description ‡	Part Number
1/8"	Poly Bowl, Twist Drain	**10F01ED**
1/8"	Metal Bowl, Twist Drain	**10F03ED**
1/8"	Poly Bowl, Auto Pulse Drain	**10F05ED**
1/8"	Metal Bowl, Auto Pulse Drain	**10F07ED**
1/4"	Poly Bowl, Twist Drain	**10F11ED**
1/4"	Metal Bowl, Twist Drain	**10F15ED**
1/4"	Poly Bowl, Auto Pulse Drain	**10F13ED**
1/4"	Metal Bowl, Auto Pulse Drain	**10F17ED**

Standard part numbers shown bold, with Grade 6 Elements (for Grade 10 Elements, replace "E" with "H" in the 6th position). For other models refer to ordering information below.

‡ For polycarbonate bowl, see caution in Engineering Section A.

Operating information

Supply pressure (max):		
Plastic bowl		0 to 150 psig (0 to 10.3 bar)
Metal bowl		0 to 250 psig (0 to 17.2 bar)
Auto pulse drain		10 to 250 psig (0.7 to 17.2 bar)
Operating pressure drop:		
Normal		2 psig (0.14 bar)
Max recommended (Element should be replaced)		10 psig (0.7 bar)
Operating temperature:		
Plastic bowl		32°F to 125°F (0°C to 52°C)
Metal bowl		32°F to 175°F (0°C to 80°C)
Auto pulse drain		125°F (52°C) or less
Flow capacity†:	Grade 6	1/8" 17 scfm (8 dm^3/s, ANR) 1/4" 20 scfm (9.4 dm^3/s, ANR)
	Grade 10	1/8" 19 scfm (9 dm^3/s, ANR) 1/4" 24 scfm (11.3 dm^3/s, ANR)
Bowl capacity:		1 oz.
Auto pulse drain tube barb		1/8 inch
Weight:		0.41 lb (0.18 kg)

† scfm = Standard cubic feet per minute at 90 psig inlet and 5 psig pressure drop.

Ordering information:

10F | **1** | **1** | **E** | **D** | ☐

Port Size	
1/8 inch	0
1/4 inch	1

Bowl Options	
Poly Bowl, Twist Drain	1
Poly Bowl, Auto Pulse Drain	5
Metal Bowl, Twist Drain	3
Metal Bowl, Auto Pulse Drain	7

Element	
E	Grade 6
H	Grade 10

Engineering Level	
D	Current

Port Type	
Blank	NPT
1	BSPP
2	BSPT

☐ Most popular.

For inventory, lead times, and kit lookup, visit www.pdnplu.com

Parker Hannifin Corporation
Pneumatic Division
Richland, Michigan
www.parker.com/pneumatics

Tel: +45 63 12 83 00 | Email: ps@hymatik.com | www.hymatik.com | Hvidkaervej 27a, DK-5250 Odense SV, Denmark

Material Specifications

Body	Zinc
Transparent bowl	Polycarbonate
Metal bowl without sight gauge	Zinc
Twist drain, body & stem	Plastic
Twist drain, seals	Nitrile
Auto pulse drain, piston & seals	Nitrile
Auto pulse drain, stem, seat, adaptor & washers	Aluminum
Element holder	Plastic
Element	Borosilicate & felt glass fibers
Seals	Nitrile

Repair and Service Kits

Poly bowl / auto pulse drain kit	**PS408BP**
Poly bowl / twist drain kit	**PS404P**
Metal bowl / auto pulse drain kit	**PS451BP**
Metal bowl / twist drain kit	**PS447BP**
Grade 6 element (standard)	**PS446P**
Grade 10 element (optional)	**PS456P**
Mounting bracket kit	**PS417BP**

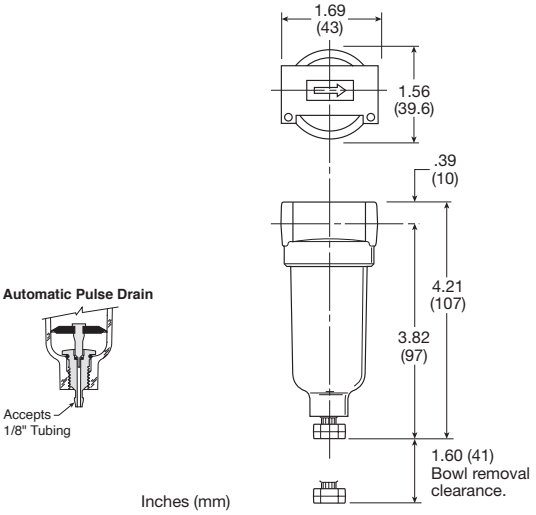

Flow Charts

Grade 6 Element

10F 1/8" Coalescing Filter

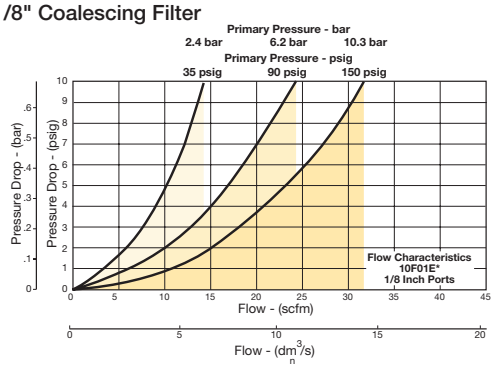

10F 1/4" Coalescing Filter

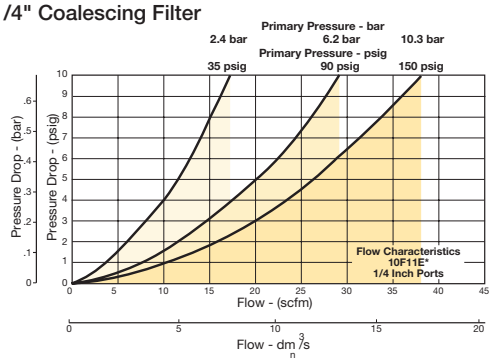

Grade 10 Element

10F 1/8" Coalescing Filter

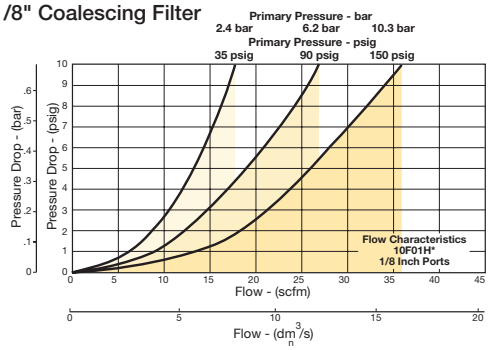

10F 1/4" Coalescing Filter

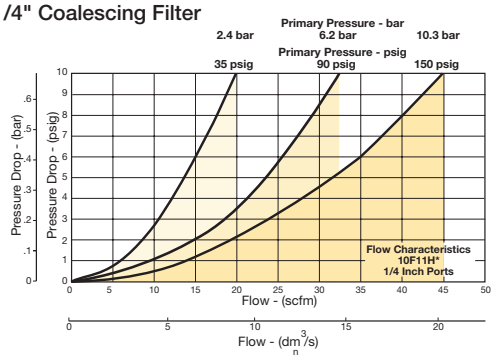

Parker Hannifin Corporation
Pneumatic Division
Richland, Michigan
www.parker.com/pneumatics

15F Coalescing Filters – Economy

- Removes liquid aerosols and sub-micron particles.
- Liquids gravitate to the bottom of the element and will not re-enter the airstream.
- Oil free air for critical applications, such as air gauging and pneumatic instrumentation and controls.
- Interchangeable twist and automatic pulse drains.
- Differential pressure indicator standard.
- 1/4" & 3/8" ports – NPT

Note: **To optimize the life of coalescing element, it is advisable to install a pre-filter with a 5 micron element upstream of the coalescing filter.**

To optimize the life of an adsorber it is advisable to install a coalescing filter upstream of the adsorber. Adsorber element should be replaced approximately every 1000 hours of service.



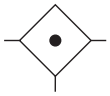

Port Size	Description ‡	Part Number
1/4"	Poly Bowl, Metal Guard, Twist Drain	**15F12EA**
1/4"	Poly Bowl, Metal Guard, Auto Pulse Drain	**15F1PEA**
3/8"	Poly Bowl, Metal Guard, Twist Drain	**15F22EA**
3/8"	Poly Bowl, Metal Guard, Auto Pulse Drain	**15F2PEA**

‡ For polycarbonate bowl, see caution in Engineering Section A.

Operating information

Supply pressure (max):		
Without DPI		
Plastic bowl		0 to 150 psig (0 to 10.3 bar)
Metal bowl		0 to 250 psig (0 to 17.2 bar)
With DPI		0 to 150 psig (0 to 10.3 bar)
Auto pulse drain		10 to 150 psig (0.7 to 10.3 bar)
Operating temperature:		
Plastic bowl		32°F to 125°F (0°C to 52°C)
Metal bowl		32°F to 175°F (0°C to 80°C)
With DPI		32°F to 125°F (0°C to 52°C)
Flow capacity†:	Grade 6	1/8" 30 scfm (14.2 dm^3/s, ANR)
		1/4" 30 scfm (14.2 dm^3/s, ANR)
Bowl capacity:		2.0 oz.
Sump capacity:		0.9 oz.
Weight:		1.2 lb (0.54 kg)

† scfm = Standard cubic feet per minute at 90 psig inlet and 5 psig pressure drop.
DPI = Differential pressure indicator

Ordering Information:

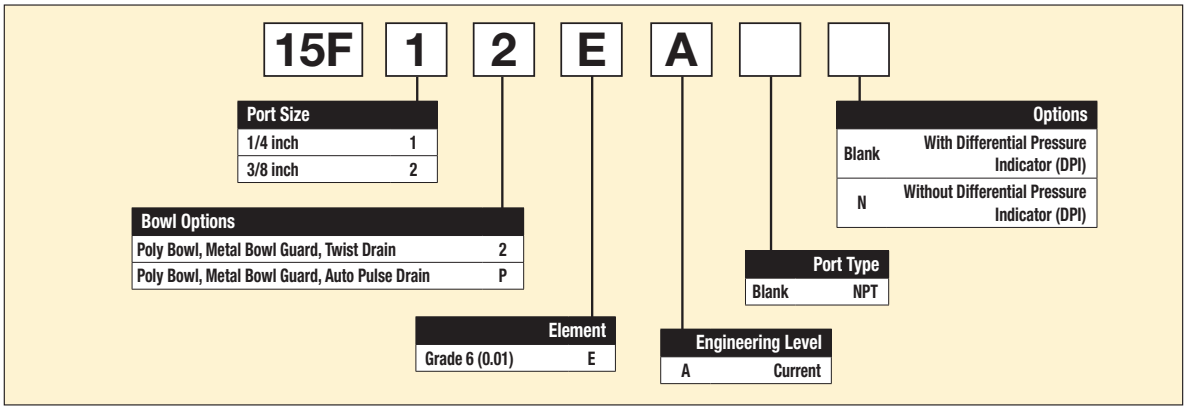

☐ Most popular.

For inventory, lead times, and kit lookup, visit www.pdnplu.com

Parker Hannifin Corporation
Pneumatic Division
Richland, Michigan
www.parker.com/pneumatics

Material Specifications

Body	Zinc
Transparent bowl	Polycarbonate
Metal bowl without sight gauge	Zinc
Bowl guards	Steel
Collar	Plastic
Drain	Plastic
Element	Borosilicate & felt glass fibers
Seals	Nitrile
Sight gauge, DPI	Polyamide (nylon)

Repair and Service Kits

Bowl Guard Kit	**PS905P**
Poly bowl / automatic pulse drain kit	**PS995P**
Poly bowl / twist drain kit	**PS932P**
DPI replacement kit	**PS781P**
Electronic DPI replacement kit	**PS764**
Automatic pulse drain kit	**PS998P**
Twist drain kit	**PS512P**
Electrical connector: 15mm, 3-pin DIN, 6 ft. cord	**PS2932JBP**
Filter element kits – Grade 6 (standard)	**PS924P**
Mounting bracket kit	**PS943P**
Sight gauge kit	**PS914P**

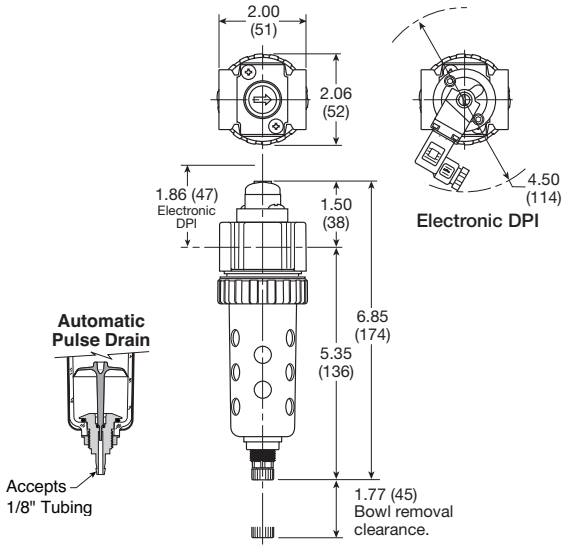

Inches (mm)

Flow Charts

Grade 6 Element

15F 1/4" Coalescing Filter

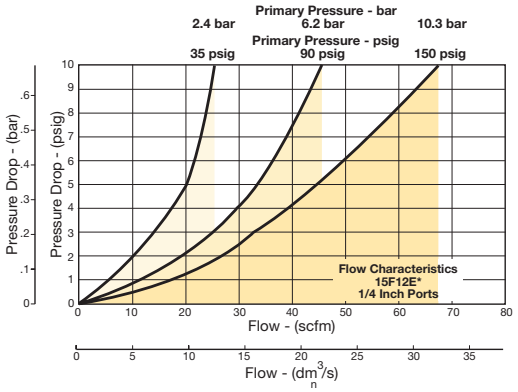

15F 3/8" Coalescing Filter

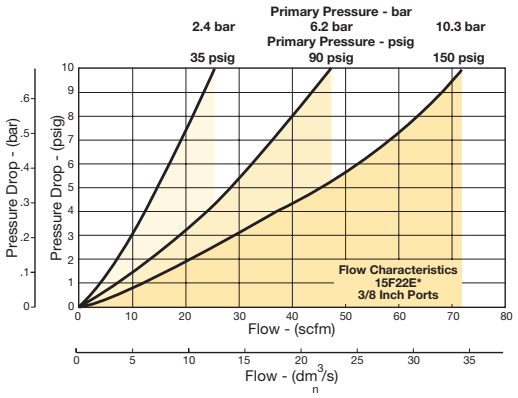

Parker Hannifin Corporation
Pneumatic Division
Richland, Michigan
www.parker.com/pneumatics

Tel: +45 63 12 83 00 | Email: ps@hymatik.com | www.hymatik.com | Hvidkaervej 27a, DK-5250 Odense SV, Denmark

P31 Regulators – Mini

- Integral 1/4" ports (NPT, BSPP & BSPT)
- Robust but lightweight aluminum construction
- Secondary pressure ranges
- Secondary aspiration plus balanced poppet provides quick response and accurate pressure regulation.
- Relieving & non-relieving types
- Non-rising knob



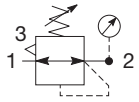

Self relieving regulator with gauge

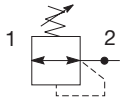

Non-relieving regulator

Operating information

Flow capacity*:	1/4	68 scfm (32 dm^3/s, ANR)
Operating temperature†:		-4°F to 150°F (-20°C to 65.5°C)
Supply pressure (max):		300 psig (20 bar)
Adjusting range pressure:		30 psig (0-2 bar) 60 psig (0-4 bar) 125 psig (0-8 bar) 232 psig (0-16 bar)
Gauge port (2 each)**		1/8 BSPP, BSPT, NPT
Weight:		0.37 lb (0.17 kg)

* Inlet pressure 145 psig (10 bar). Secondary pressure 91.3 psig (6.3 bar) and 14.5 psig (1 bar) pressure drop.
** Non-gauge option only.
† Units with square gauges: 5°F to 150°F (-15°C to 65.5°C)

Port Size	Description (Relieving)	Gauge	Part Number
1/4"	125 psig (8 bar)	None	**P31RB92BNNP**
1/4"	125 psig (8 bar)	Square	**P31RB92BN5P**

Ordering Information:

P31RB 9 2 B N 5 P

Basic Series
Global Modular Mini Regulator — P31RB

Thread Type

BSPP	1
BSPT	2
NPT	9

Port Size

1/4	2

Relief

Relieving	B
Non-Relieving	N
Reverse Flow-Relieving	R

Adjustment

N	Non-Rising Knob

Mounting

P	Plastic Panel Mount Nut

Adjustment Range

With Square Gauge		With Round Gauge	
psig	Bar		
1 = 30*	V = 2*	Z	30 psig; 2 Bar; 0.2 MPa
3 = 60	S = 4	M	60 psig; 4 Bar; 0.4 MPa
5 = 125	T = 8	G	125 psig; 8 Bar; 0.8 MPa
		J	232 psig; 16 Bar; 1.6 MPa
		Without Gauge	
		Y	30 psig; 2 Bar; 0.2 MPa
		L	60 psig; 4 Bar; 0.4 MPa
		N	125 psig; 8 Bar; 0.8 MPa
		H	232 psig; 16 Bar; 1.6 MPa

* Regulator comes with gauge respective to the adjustment range selected.

☐ Most popular.

Tel: +45 63 12 83 00 | Email: ps@hymatik.com | www.hymatik.com | Hvidkaervej 27a, DK-5250 Odense SV, Denmark

Material Specifications

Body	Aluminum
Adjustment knob	Acetal
Bonnet	PBT
Diaphragm assembly	Brass / Nitrile
Valve assembly	Brass / Nitrile
Springs	Steel
Seals	Nitrile
Panel nut	Acetal

Repair and Service Kits

Diaphragm repair kit - relieving	**P31KB00RB**
Diaphragm repair kit - non-relieving	**P31KB00RC**
Panel mount nut - aluminum	**P31KA00MM**
Panel mount nut - plastic	**P31KA00MP**
Angle bracket (attaches via panel nut)	**P31KB00MR**
C-bracket (fits to body)	**P31KA00MW**
T-bracket with body connector	**P31KA00MT**
Body connector	**P31KA00CB**

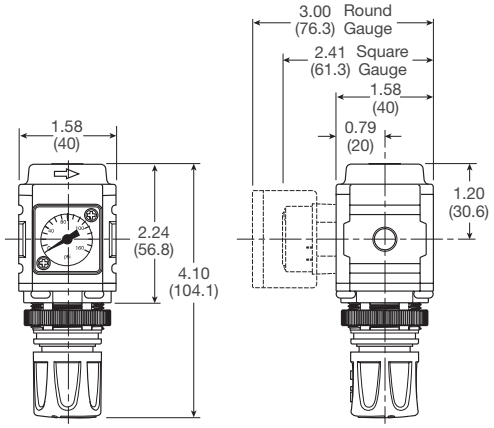

Inches (mm)

NOTE: 1.20 in. (30mm) hole required for panel nut mounting.

Flow Charts

P31 1/4 Regulator

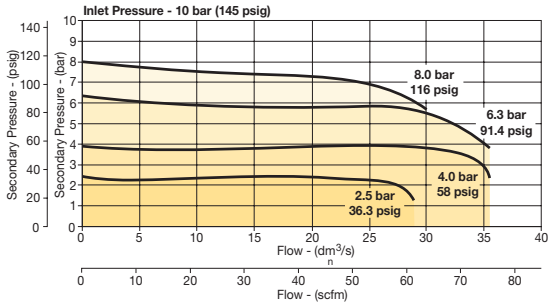

⚠ WARNING

Product rupture can cause serious injury.
Do not connect regulator to bottled gas.
Do not exceed Maximum primary pressure rating.

CAUTION:

REGULATOR PRESSURE ADJUSTMENT – The working range of knob adjustment is designed to permit outlet pressures within their full range. Pressure adjustment beyond this range is also possible because the knob is not a limiting device. This is a common characteristic of most industrial regulators, and limiting devices may be obtained only by special design. For best performance, regulated pressure should always be set by increasing the pressure up to the desired setting.

Gauges

Square flush mount gauge	0-4 bar	**K4511SCR04B**
	0-11 bar	**K4511SCR11B**
	0-60 psig	**K4511SCR060**
	0-160 psig	**K4511SCR160**
Square with adapter kit	0-4 bar	**P6G-PR10040**
	0-11 bar	**P6G-PR10110**
	0-60 psig	**P6G-PR90060**
	0-160 psig	**P6G-PR90160**
1.00" Round 1/8" center back mount	0-60 psig / 0-4 bar	**K4510N18060**
	0-160 psig / 0-11 bar	**K4510N18160**
40mm Round 1/8" center back mount (Not for use with common port regulators)	0-30 psig / 0-2 bar	**K4515N18030**
	0-60 psig / 0-4 bar	**K4515N18060**
	0-160 psig / 0-11 bar	**K4515N18160**

For best performance, regulated pressure should always be set by increasing the pressure up to the desired setting.

14R Regulators – Miniature

- Unbalanced poppet standard
- Solid control piston with lip seal for extended life
- Non-rising adjusting knob
- Compact design
- Very easy to service
- 1/8", 1/4" ports (NPT, BSPP, BSPT)



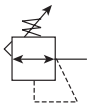

Port Size	Description	Part Number
1/8"	Without Gauge	**14R013FC**
1/8"	With Gauge	**14R018FC**
1/4"	Without Gauge	**14R113FC**
1/4"	With Gauge	**14R118FC**

NOTE: 1.218 Dia. (31 mm) hole required for panel mounting.

Operating information

Supply pressure (max):		0 to 300 psig (0 to 20.7 bar)
Secondary pressure ranges		
Standard		2 to 125 psig (0 to 8.6 bar)
Medium		1 to 60 psig (0 to 4.1 bar)
Medium		1 to 30 psig (0 to 2.1 bar)
Low		1 to 15 psig (0 to 1 bar)
Operating temperature:		32°F to 125°F (0°C to 52°C)
Low temperature		-4°F to 125°F (-20°C to 52°C)
Flow capacity†:		
High flow	1/8"	13 scfm (6.1 dm^3/s, ANR)
	1/4"	15 scfm (7.1 dm^3/s, ANR)
Gauge ports (2):		1/8 or 1/4 inch
Weight:		0.3 lb (0.14 kg)

† scfm = Standard cubic feet per minute at 100 psig inlet, 90 psig no flow secondary setting and 10 psig pressure drop.

Ordering Information:

14R	1	13	F	C			

Port Size

1/8 Inch Pipe, 1/8 Inch Gauge Port	0
1/4 Inch Pipe, 1/8 Inch Gauge Port	1
1/4 Inch Pipe, 1/4 Inch Gauge Port	B
1/8 Inch Pipe, No Gauge Port	C
Manifold Mounting	M

Pressure Range

Yellow Knob		Black Knob	
Without Gauge			
30 psig	10	30 psig	B0
60 psig	11	60 psig	B1
15 psig	12	15 psig	B2
125 psig	13	125 psig	B3
With Gauge*			
30 psig	15	30 psig	B5
60 psig	16	60 psig	B6
15 psig	17	15 psig	B7
125 psig	18	125 psig	B8

* Not available with BSPP or BSPT port types.

Relief

F	Relieving
G	Non-Relieving
H	Low Temp. Relieving
J	Low Temp. Non-Relieving

Engineering Level

C	Current

Port Type

Blank	NPT
1	BSPP
2	BSPT

Preset / Pressure Limited

Blank	None
XXX*	Preset Pressure
XXX*	Pressure Limited

* Available preset / pressure limited range, 10 to 90 psig in 5 psig increments. For higher pressures, contact factory.

(Example: 065 = 65 psig)

Options

Blank	No Options
L†	Preset Non-Adjustable
P†	Preset Adjustable
S†	Pressure Limiter Max. Adjustable
T†	Pressure Limiter Max. Non-Adjustable

† Inlet pressure is 100 psig. For other pressures contact factory.

Spring Type by Preset / Limited Pressure:
For Preset / Limited Pressure 10 to 25 use 30 psi spring
For Preset / Limited Pressure 26 to 50 use 60 psi spring
For Preset / Limited Pressure 51 to 90 use 125 psi spring

☐ Most popular.

For inventory, lead times, and kit lookup, visit www.pdnplu.com

Parker Hannifin Corporation
Pneumatic Division
Richland, Michigan
www.parker.com/pneumatics

Tel: +45 63 12 83 00 | Email: ps@hymatik.com | www.hymatik.com | Hvidkaervej 27a, DK-5250 Odense SV, Denmark

Material Specifications

Adjusting nut	Brass
Adjusting stem & spring	Steel
Body	Zinc
Bonnet, seat, piston & valve poppet	Plastic
Seals	Nitrile

Repair and Service Kits

Bonnet assembly kit	**L01369**
Bonnet tamperproof kit	**P01265**
30 psig gauge, 1/8" NPT (0 to 2.1 bar)	**K4515N18030**
60 psig gauge, 1/8" NPT (0 to 4.1 bar)	**K4515N18060**
160 psig gauge, 1/8" NPT (0 to 11.0 bar)	**K4515N18160**
60 psig gauge, 1/4" NPT (0 to 4.1 bar)	**K4520N14060**
160 psig gauge, 1/4" NPT (0 to 11.0 bar)	**K4520N14160**
Mounting bracket kit* (includes panel mount nut)	**PS417BP**
Plastic panel mount nuts*	**P78652**
Metal panel mount nuts*	**P01531**
Unbalanced non-relieving, poppet / piston kit	**PS428P**
Unbalanced relieving, poppet / piston kit	**PS426P**
1-15 psig spring (yellow)	**P01176**
1-30 psig spring (black)	**P01175**
1-60 psig spring (white)	**P01174**
2-125 psig spring (gold)	**P01173**

* Tighten panel mount nut 2.8 to 3.4 Nm (25 to 30 in-lbs) of torque.

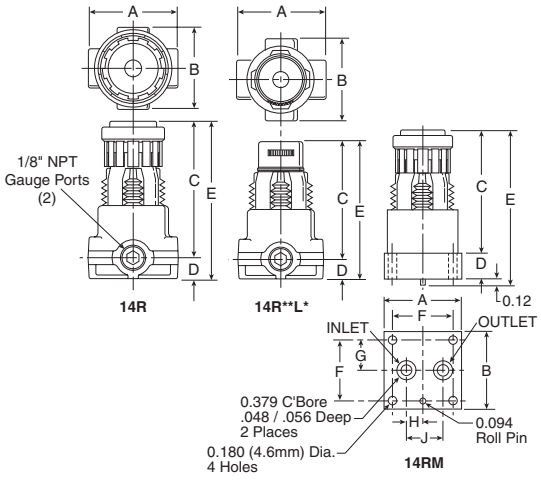

Flow Charts

14R 1/8" Regulators

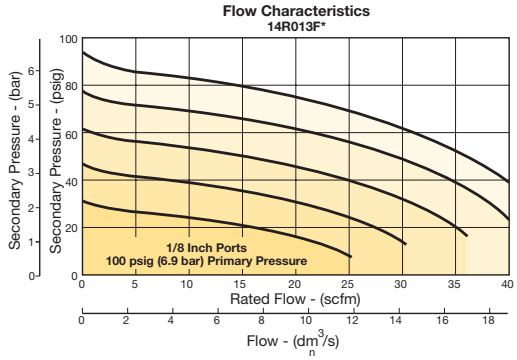

14R 1/4" Regulators

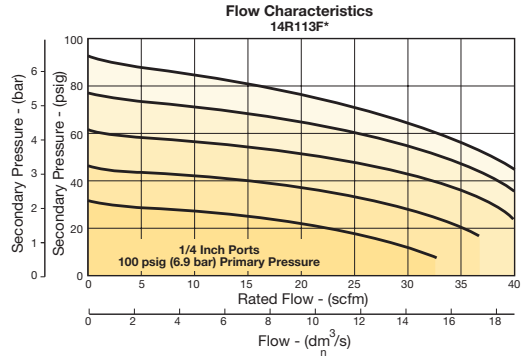

⚠ WARNING

Product rupture can cause serious injury.
Do not connect regulator to bottled gas.
Do not exceed Maximum primary pressure rating.

CAUTION:

REGULATOR PRESSURE ADJUSTMENT – The working range of knob adjustment is designed to permit outlet pressures within their full range. Pressure adjustment beyond this range is also possible because the knob is not a limiting device. This is a common characteristic of most industrial regulators, and limiting devices may be obtained only by special design. For best performance, regulated pressure should always be set by increasing the pressure up to the desired setting.

Tel: +45 63 12 83 00 | Email: ps@hymatik.com | www.hymatik.com | Hvidkaervej 27a, DK-5250 Odense SV, Denmark

P3A-R Regulators – Miniature

- Lightweight plastic body
- Non-rising adjusting knob
- Solid control piston with lip seal for extended life
- Unbalanced poppet standard
- Two full flow 1/8" gauge ports
- Reverse flow capability
- 1/8", 1/4" ports (NPT)



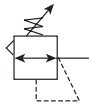

Port Size	Description	Part Number
1/4"	Without Gauge	**P3A-RN92YNNN**

NOTE: 1.218 Dia. (31 mm) hole required for panel mounting.

Operating information

Supply pressure (max):		120 psig (8.3 bar)
Secondary pressure:		
15 psig spring		1 to 15 psig (0.07 to 1.0 bar)
30 psig spring		6 to 30 psig (0.4 to 2.1 bar)
60 psig spring		6 to 60 psig (0.4 to 4.1 bar)
110 psig spring		6 to 110 psig (0.4 to 7.6 bar)
Operating temperature:		32°F to 125°F (0°C to 52°C)
Flow capacity†:		
High flow	1/8"	13 scfm (6.1 dm^3/s, ANR)
	1/4"	15 scfm (7.1 dm^3/s, ANR)
Gauge ports (2):		1/8 inch
Weight:		0.3 lb (0.14 kg)

† scfm = Standard cubic feet per minute at 100 psig inlet, 90 psig no flow secondary setting and 10 psig pressure drop.

Ordering Information:

P3A-RN **9** **1** **Y** **N** **N** **N** ☐

Port Type	
NPT Female	9

Port Size	
1/8 inch	1
1/4 inch	2

Relief	
Non-Relieving, Black Knob	B
Relieving, Black Knob	N
Non-Relieving, Yellow Knob	Q
Relieving, Yellow Knob	Y

Pressure / Gauge	
Without Gauge	
15 psig (0 to 1 bar)	A
30 psig (0 to 2 bar)	Y
60 psig (0 to 4 bar)	L
120 psig (0 to 8 bar)	N
With Gauge	
15 psig (0 to 1 bar)	B
30 psig (0 to 2 bar)	Z
60 psig (0 to 4 bar)	M
120 psig (0 to 8 bar)	G

Options	
N	No Options
L†	Preset Non-Adjustable
P†	Preset Adjustable
S†	Pressure Limiter Max. Adjustable
T†	Pressure Limiter Max. Non-Adjustable

† Inlet pressure is 100 psig. For other pressures contact factory.

Option	
N	None

Preset / Pressure Limited	
Blank	None
XXX*	Preset Pressure
XXX*	Pressure Limited

* Available preset / pressure limited range, 10 to 90 psig in 5 psig increments. For higher pressures, contact factory.

(Example: 065 = 65 psig)

☐ Most popular.

For inventory, lead times, and kit lookup, visit www.pdnplu.com

Parker Hannifin Corporation
Pneumatic Division
Richland, Michigan
www.parker.com/pneumatics

Tel: +45 63 12 83 00 | Email: ps@hymatik.com | www.hymatik.com | Hvidkaervej 27a, DK-5250 Odense SV, Denmark

Material Specifications

Adjusting nut	Brass
Adjusting stem & spring	Steel
Poppet return spring	Stainless Steel
Body	Plastic
Bonnet, seat & piston	Plastic
Seals	Nitrile
Valve poppet	Plastic & nitrile

Repair and Service Kits

30 psig gauge, 1/8" NPT (0 to 2.1 bar)	**K4515N18030**
60 psig gauge, 1/8" NPT (0 to 4.1 bar)	**K4515N18060**
160 psig gauge, 1/8" NPT (0 to 11.0 bar)	**K4515N18160**
Mounting bracket kit* (includes panel mount nut)	**PS417BP**
Panel mount nut*	**P78652**
Unbalanced non-relieving, poppet / piston kit	**PS428P**
Unbalanced relieving, poppet / piston kit	**PS426P**
1-15 psig Spring (yellow)	**P01176**
1-30 psig spring (black)	**P01175**
1-60 psig spring (white)	**P01174**
5-110 psig spring (gold)	**P01173**

* Tighten panel mount nut 2.8 to 3.4 Nm (25 to 30 in-lbs) of torque.

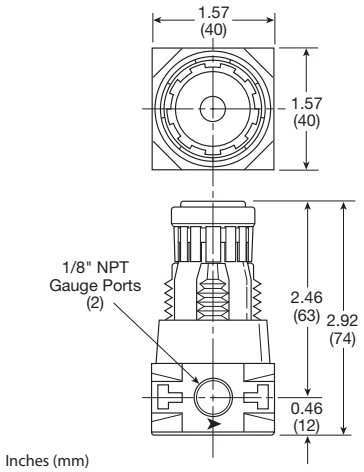

Flow Charts

P3A-R 1/8" Regulator

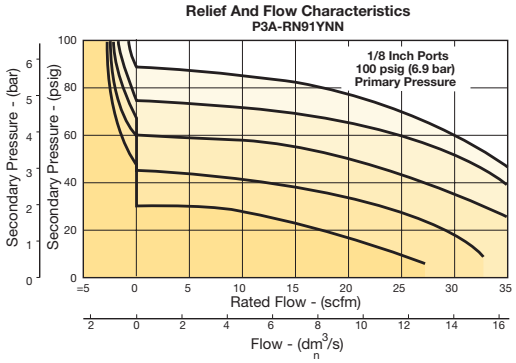

P3A-R 1/4" Regulator

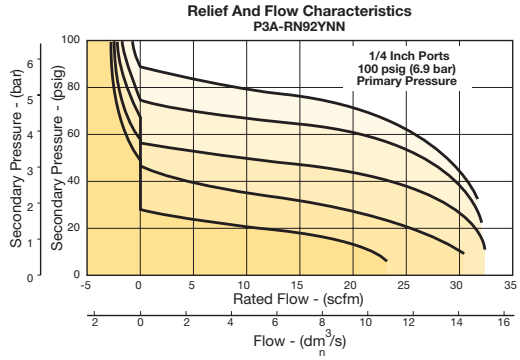

⚠ WARNING

Product rupture can cause serious injury.
Do not connect regulator to bottled gas.
Do not exceed Maximum primary pressure rating.

CAUTION:

REGULATOR PRESSURE ADJUSTMENT – The working range of knob adjustment is designed to permit outlet pressures within their full range. Pressure adjustment beyond this range is also possible because the knob is not a limiting device. This is a common characteristic of most industrial regulators, and limiting devices may be obtained only by special design. For best performance, regulated pressure should always be set by increasing the pressure up to the desired setting.

Tel: +45 63 12 83 00 | Email: ps@hymatik.com | www.hymatik.com | Hvidkaervej 27a, DK-5250 Odense SV, Denmark

R34 Regulators – Miniature

- Diaphragm operated for fast response
- Large diaphragm to valve area ratio for precise regulation and high flow capacity
- Balanced valve design for precise regulation
- Available in 2 or 4 port design
- Available with a manifold mount to minimize plumbing
- Suitable for low temperature applications
- Non-rising adjusting knob
- 1/8", 1/4" ports (NPT, BSPP)



Relieving



Non-Relieving



R344-02C



R342-0MC

Port Size	Description	Part Number Without Gauge	With Gauge
1/8"	Relieving, 0 to 30 psig	**R344-01A**	**R344-01AG**
1/8"	Relieving, 0 to 60 psig	**R344-01B**	**R344-01BG**
1/8"	Relieving, 0 to 125 psig	**R344-01C**	**R344-01CG**
1/4"	Relieving, 0 to 30 psig	**R344-02A**	**R344-02AG**
1/4"	Relieving, 0 to 60 psig	**R344-02B**	**R344-02BG**
1/4"	Relieving, 0 to 125 psig	**R344-02C**	**R344-02CG**
Manifold	Relieving, 0 to 30 psig	**R342-0MA**	–
Manifold	Relieving, 0 to 60 psig	**R342-0MB**	–
Manifold	Relieving, 0 to 125 psig	**R342-0MC**	–

Operating information

Supply pressure (max):		300 psig (0 to 20.7 bar)
Operating temperature:		-40°F to 150°F (-40°C to 65.5°C)
Flow capacity†:		
High flow	1/8"	17 scfm (8.0 dm^3/s, ANR)
	1/4"	19 scfm (8.9 dm^3/s, ANR)
Gauge ports (2):		1/8 inch (no gauge port version available)
Weight:		0.25 lb (0.11 kg)

† scfm = Standard cubic feet per minute at 100 psig inlet, 90 psig no flow secondary setting and 10 psig pressure drop.

Ordering Information:

R34 4 – 02 C G ☐ ☐

Number of Ports

2 Ports	2
4 Ports	4*

* Not available with manifold mount.

Thread

NPT	–
BSPP	G

Port

1/8 inch	01
1/4 inch	02
Manifold Mount	0M

Pressure Range

0 to 30 psi	A
0 to 60 psi	B
0 to 125 psi	C

Options

Blank	No Option
G	Gauge
K	Non-Relieving Diaphragm
N	Unbalanced
P	Panel Mount Nut
X64	Fluorocarbon Elastomers

Options

Blank	No Options
L†	Preset Non-Adjustable
M†	Preset Adjustable

† Inlet pressure is 100 psig. For other pressures contact factory.

Preset

Blank	None
XXX*	Preset Pressure

* Available preset / pressure limited range, 10 to 90 psig in 5 psig increments. For higher pressures, contact factory.

(Example: 065 = 65 psig)

☐ Most popular.

For inventory, lead times, and kit lookup, visit www.pdnplu.com

Parker Hannifin Corporation
Pneumatic Division
Richland, Michigan
www.parker.com/pneumatics

Tel: +45 63 12 83 00 | Email: ps@hymatik.com | www.hymatik.com | Hvidkaervej 27a, DK-5250 Odense SV, Denmark

Material Specifications

Body	Aluminum
Bonnet	Acetal
Diaphragm & seals	Nitrile
Valve assembly	Brass
Springs	Steel
Panel Nut	Acetal

Repair and Service Kits

Diaphragm assembly, non-relieving	**GRP-96-726**
Diaphragm assembly, relieving	**GRP-96-725**
0 to 30 psig (0 to 2.1 bar), spring, regulating	**GRP-95-111**
0 to 60 psig (0 to 4.1 bar) spring, regulating	**GRP-96-718**
0 to 125 psig (0 to 8.6 bar) spring, regulating	**GRP-96-717**
Panel mount nut, aluminum	**R05X51-A**
Panel mount nut, plastic	**R05X51-P**
Mounting bracket kit (includes panel mount nut)	**SA161X57**
1-1/2" Dial Face, 1/8 NPT, CBM, 0 to 60 psig (0 to 4.1 bar), gauge	**K4515N18060**
1-1/2" Dial Face, 1/8 NPT, CBM, 0 to 160 psig (0 to 11.0 bar), gauge	**K4515N18160**
Tamperproof knob kit	**P31KB00AT**

R342 / R344

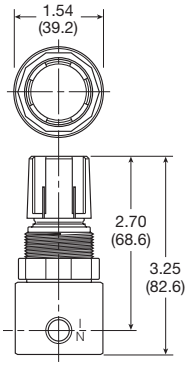

R342-0MC

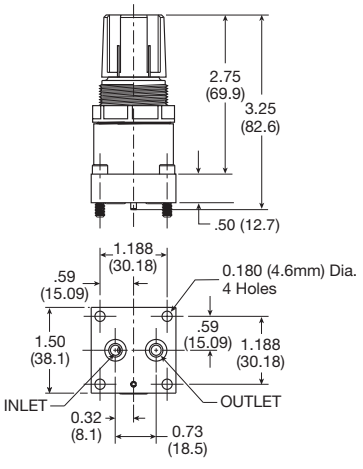

Inches (mm)

Flow Charts

R34 1/8" Manifold Mount

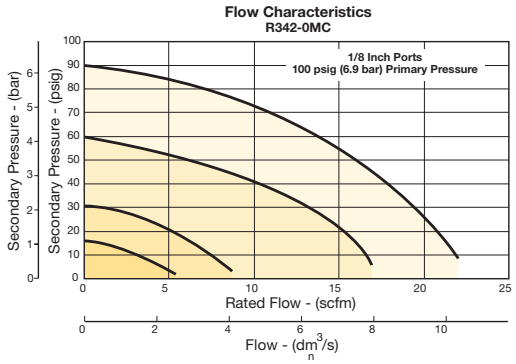

R34 1/8" Regulator

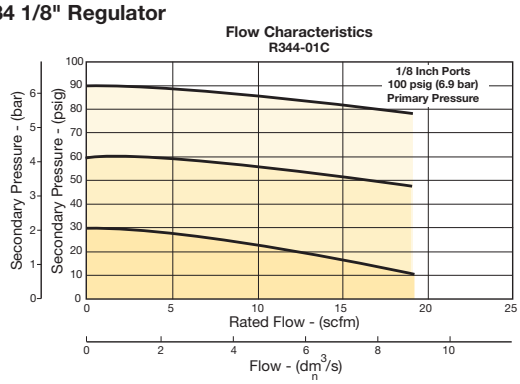

R34 1/4" Regulator

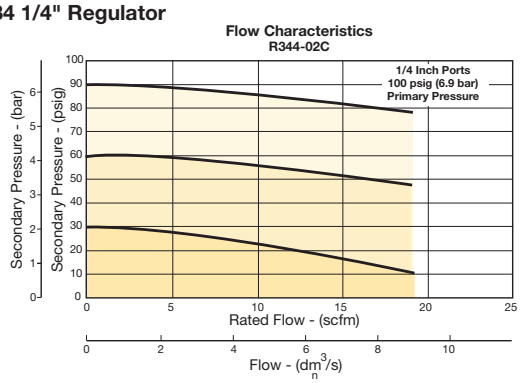

⚠ WARNING

Product rupture can cause serious injury.
Do not connect regulator to bottled gas.
Do not exceed Maximum primary pressure rating.

CAUTION:

REGULATOR PRESSURE ADJUSTMENT – The working range of knob adjustment is designed to permit outlet pressures within their full range. Pressure adjustment beyond this range is also possible because the knob is not a limiting device. This is a common characteristic of most industrial regulators, and limiting devices may be obtained only by special design. For best performance, regulated pressure should always be set by increasing the pressure up to the desired setting.

Tel: +45 63 12 83 00 | Email: ps@hymatik.com | www.hymatik.com | Hvidkaervej 27a, DK-5250 Odense SV, Denmark

R25 Regulators – Miniature

- Lightweight plastic body
- Unbalanced poppet standard
- Non-rising, push-to-lock adjusting knob
- Compact, 3.10 Inch (79 mm) high by 1.60 Inch (41 mm) wide
- Lightweight
- Diaphragm operated
- 1/8", 1/4" ports (NPT)



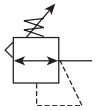

Port Size	Description	Part Number
1/8"	Relieving, 0-125 Reduced Pressure, without Gauge	**R25-01C**
1/4"	Relieving, 0-125 Reduced Pressure, without Gauge	**R25-02C**

NOTE: 1.250 Dia. (31.8 mm) hole required for panel mounting.

Operating information

Supply pressure (max):	Inlet 150 psig (10.0 bar)
Operating temperature:	40°F to 125°F (4°C to 52°C)
Gauge ports (2):	1/8 inch (can be used for full flow)
Weight:	0.25 lb (0.11 kg)

Ordering Information:

R25 – 02 C ☐

Type	
Buna Elastomers	R25

Port Size	
1/8 inch	01
1/4 inch	02

Pressure Range	
A	0 to 25 psig (0 to 2 bar)
B	0 to 60 psig (0 to 4 bar)
C	0 to 125 psig (0 to 125 (0 to 8 bar)

Relief	
Blank	Relieving
P	Panel Mount Nut

☐ Most popular.

For inventory, lead times, and kit lookup, visit www.pdnplu.com

Parker Hannifin Corporation
Pneumatic Division
Richland, Michigan
www.parker.com/pneumatics

Tel: +45 63 12 83 00 | Email: ps@hymatik.com | www.hymatik.com | Hvidkaervej 27a, DK-5250 Odense SV, Denmark

Material Specifications

Adjusting screw	Steel
Body	Acetal
Bonnet and seat	Acetal
Diaphragm	Buna N
Seals	Buna N
Springs	Stainless steel
Valve poppet	Buna N

Repair and Service Kits

Panel mount nut, plastic	**R05X51-P**
Panel mount nut, aluminum	**R05X51-A**
Mounting bracket and nut	**SA161X57**
Relieving (Buna)	**RKR25Y**
Non-Relieving (Buna)	**RKR25KY**
0-25 psig spring	**SPR-375-1**
0-60 psig spring	**SPR-376**
0-125 psig spring	**SPR-377**

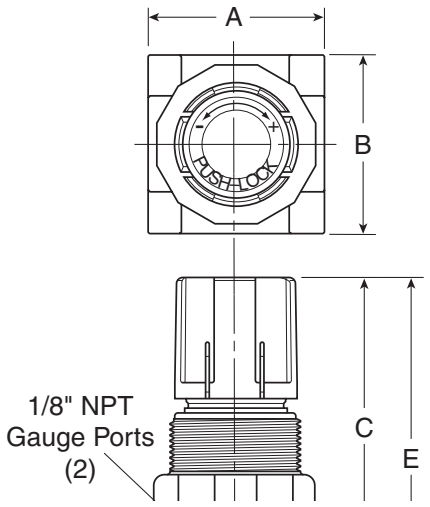

Flow Charts

R25 1/4" Regulator

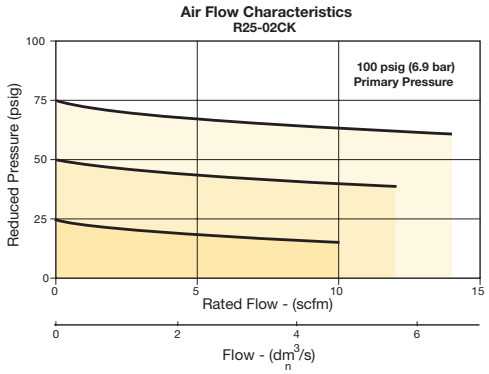

⚠ WARNING

Product rupture can cause serious injury.
Do not connect regulator to bottled gas.
Do not exceed Maximum primary pressure rating.

CAUTION:

REGULATOR PRESSURE ADJUSTMENT – The working range of knob adjustment is designed to permit outlet pressures within their full range. Pressure adjustment beyond this range is also possible because the knob is not a limiting device. This is a common characteristic of most industrial regulators, and limiting devices may be obtained only by special design. For best performance, regulated pressure should always be set by increasing the pressure up to the desired setting.

Tel: +45 63 12 83 00 | Email: ps@hymatik.com | www.hymatik.com | Hvidkaervej 27a, DK-5250 Odense SV, Denmark

R45 Regulators – Miniature

- Lightweight plastic body
- Unbalanced poppet standard
- Non-rising, push-to-lock adjusting knob
- Compact, 3.43 inch (87.1 mm) high by 2.06 inch (52.3 mm) wide
- Lightweight
- Diaphragm operated
- 1/4", 3/8" ports (NPT)

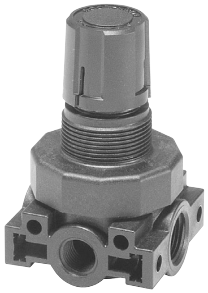

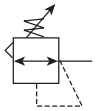

Port Size	Description	Part Number
1/4"	Relieving, 0-125 Reduced Pressure, without Gauge	**R45-02C**
3/8"	Relieving, 0-125 Reduced Pressure, without Gauge	**R45-03C**

NOTE: 1.250 Dia. (31.8 mm) hole required for panel mounting.

Operating information

Supply pressure (max):	Inlet 150 psig (10.0 bar)
Operating temperature:	40°F to 125°F (4°C to 52°C)
Gauge ports (2):	1/4 inch (can be used for full flow)
Weight:	0.38 lb (0.17 kg)

Ordering Information:

R45 – 02 C ☐

Type	
Buna Elastomers	R45

Port Size	
1/4 inch	02
3/8 inch	03

Pressure Range	
A	0 to 25 psig (0 to 2 bar)
B	0 to 60 psig (0 to 4 bar)
C	0 to 125 psig (0 to 8 bar)

Relief	
Blank	Relieving
P	Panel Mount Nut

☐ Most popular.

Tel: +45 63 12 83 00 | Email: ps@hymatik.com | www.hymatik.com | Hvidkaervej 27a, DK-5250 Odense SV, Denmark

Material Specifications

Adjusting screw	Steel
Body	Acetal
Bonnet and seat	Acetal
Diaphragm	Buna N
Seals	Buna N
Springs	Stainless steel
Valve Poppet	Buna N

Repair and Service Kits

Panel mount nut, plastic	**R05X51**
Panel mount nut, aluminum	**R05X51-A**
Mounting bracket and nut	**SA161X57**
Relieving	**RKR45Y**
Non-Relieving	**RKR45KY**
0-25 psig spring	**SPR-46**
0-60 psig spring	**SPR-47**
0-125 psig spring	**SPR-48**

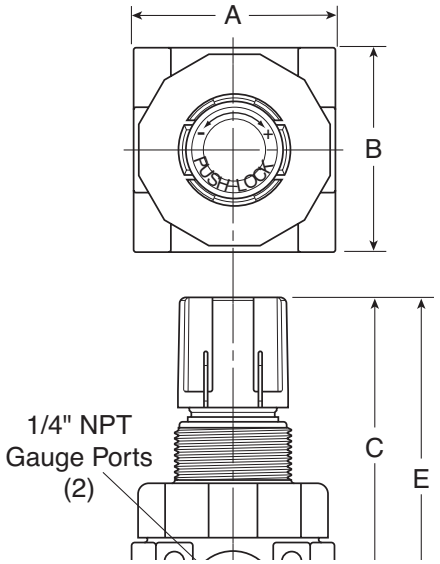

Flow Charts

R45 1/4" Regulator

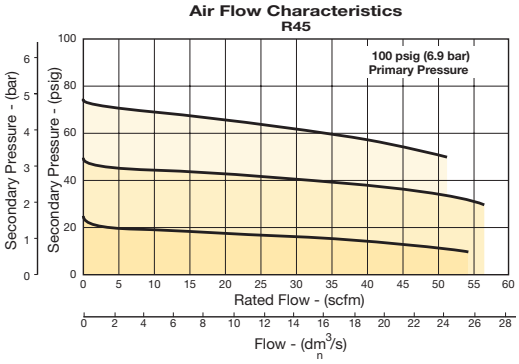

⚠ WARNING

Product rupture can cause serious injury.
Do not connect regulator to bottled gas.
Do not exceed Maximum primary pressure rating.

CAUTION:

REGULATOR PRESSURE ADJUSTMENT – The working range of knob adjustment is designed to permit outlet pressures within their full range. Pressure adjustment beyond this range is also possible because the knob is not a limiting device. This is a common characteristic of most industrial regulators, and limiting devices may be obtained only by special design. For best performance, regulated pressure should always be set by increasing the pressure up to the desired setting.

Tel: +45 63 12 83 00 | Email: ps@hymatik.com | www.hymatik.com | Hvidkaervej 27a, DK-5250 Odense SV, Denmark

15R Regulators – Economy

- Solid control piston with resilient seat for service-free operation
- Non-rising "locking" adjusting knob
- Compact, 3.30 inch (84 mm) high by 2.12 inch (54 mm) wide
- Easily serviced
- 1/4", 3/8" ports (NPT)

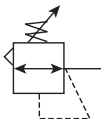



Port Size	Description	Part Number
1/4"	Without Gauge	**15R113FB**
1/4"	With Gauge	**15R118FB**
3/8"	Without Gauge	**15R213FB**
3/8"	With Gauge	**15R218FB**

NOTE: 1.218 Dia. (31 mm) hole required for panel mounting.

Operating information

Supply pressure (max):		0 to 250 psig (0 to 17.2 bar)
Secondary pressure ranges		
Standard		2 to 125 psig (0 to 8.6 bar)
Medium		1 to 60 psig (0 to 4.1 bar)
Medium		1 to 30 psig (0 to 1.7 bar)
Low		1 to 15 psig (0 to 1 bar)
Operating temperature:		32°F to 125°F (0°C to 52°C)
Low temperature		-4°F to 125°F (-20°C to 52°C)
Flow capacity†:		
High flow	1/4"	21 scfm (9.9 dm^3/s, ANR)
	3/8"	28 scfm (13.2 dm^3/s, ANR)
Gauge ports (2):		1/4 inch (can be used at full flow)
Weight:		0.5 lb (0.23 kg)

† scfm = Standard cubic feet per minute at 100 psig inlet, 90 psig no flow secondary setting and 10 psig pressure drop.

Ordering Information:

15R | **1** | **13** | **F** | **B**

Port Size	
1/4 inch	1
3/8 inch	2

Pressure Range	
Without Gauge	
15 psig	12
30 psig	10
60 psig	11
125 psig	13
With Gauge	
15 psig	17
30 psig	15
60 psig	16
125 psig	18

Relief	
F	Relieving
G	Non-Relieving
H	Low Temp Relieving
J	Low Temp Non-Relieving

Engineering Level	
B	Current

☐ Most popular.

For inventory, lead times, and kit lookup, visit www.pdnplu.com

Parker Hannifin Corporation
Pneumatic Division
Richland, Michigan
www.parker.com/pneumatics

Tel: +45 63 12 83 00 | Email: ps@hymatik.com | www.hymatik.com | Hvidkaervej 27a, DK-5250 Odense SV, Denmark

Material Specifications

Adjusting nut	Brass
Adjusting stem & spring	Steel
Body	Zinc
Bonnet, seat, piston & valve poppet	Plastic
Seals	Nitrile

Repair and Service Kits

Body Service Kit – Unbalanced	**PS424BP**
Bonnet Assembly Kit	**L01369**
30 psig, 1/8" NPT (0 to 2.1 bar) gauge	**K4515N18030**
60 psig, 1/8" NPT (0 to 4.1 bar) gauge	**K4515N18060**
160 psig, 1/8" NPT (0 to 11.0 bar) gauge	**K4515N18160**
60 psig, 1/4" NPT (0 to 4.1 bar) gauge	**K4520N14060**
160 psig, 1/4" NPT (0 to 11.0 bar) gauge	**K4520N14160**
Mounting bracket kit* (Includes panel mount nut)	**PS417BP**
Panel mount nuts*, plastic	**P78652**
Panel mount nuts*, metal	**P01531**
Poppet / piston kit, unbalanced, non-relieving	**PS428P**
Poppet / piston kit, unbalanced, relieving	**PS426P**
Seal, unbalanced	**PS454B**
1-15 psig spring (yellow)	**P01176**
1-30 psig spring (black)	**P01175**
1-60 psig spring (white)	**P01174**
2-125 psig spring (gold)	**P01173**

* Tighten panel mount nut 2.8 to 3.4 Nm (25 to 30 in-lbs) of torque.

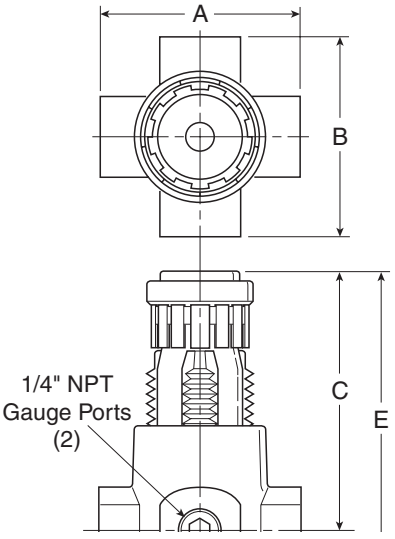

Flow Charts

15R 1/4" Regulator

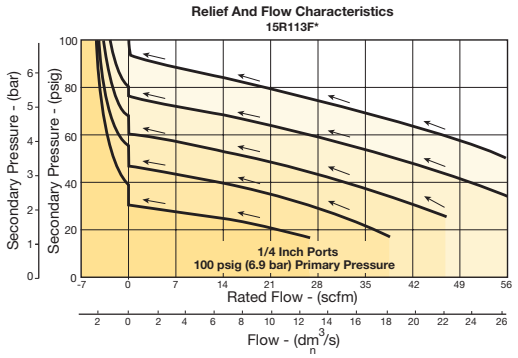

15R 3/8" Regulator

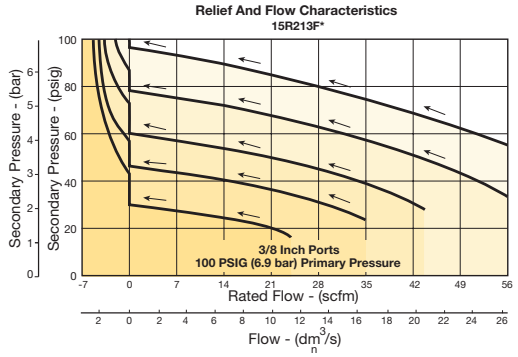

⚠ WARNING

Product rupture can cause serious injury.
Do not connect regulator to bottled gas.
Do not exceed Maximum primary pressure rating.

CAUTION:

REGULATOR PRESSURE ADJUSTMENT – The working range of knob adjustment is designed to permit outlet pressures within their full range. Pressure adjustment beyond this range is also possible because the knob is not a limiting device. This is a common characteristic of most industrial regulators, and limiting devices may be obtained only by special design. For best performance, regulated pressure should always be set by increasing the pressure up to the desired setting.

Tel: +45 63 12 83 00 | Email: ps@hymatik.com | www.hymatik.com | Hvidkaervej 27a, DK-5250 Odense SV, Denmark

P31 Filter / Regulators – Mini

- Integral 1/4" ports (NPT, BSPP & BSPT)
- High efficiency 5 micron element as standard
- Excellent water removal efficiency
- Robust but lightweight aluminum construction
- Positive bayonet latch to ensure correct & safe fitting
- Secondary pressure ranges
- Secondary aspiration plus balanced poppet provides quick response and accurate pressure regulation



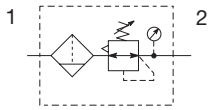

Port Size	Description (relieving)	Bowl / Drain Type	Part Number
1/4"	125 psig (8 bar)	Poly / Manual	**P31EB92EGMBN5P**
1/4"	125 psig (8 bar)	Poly / Pulse	**P31EB92EGBBN5P**
1/4"	125 psig (8 bar)	Metal / Manual	**P31EB92EMMBN5P**
1/4"	125 psig (8 bar)	Metal / Pulse	**P31EB92EMBBN5P**

Operating information

Flow capacity*:	1/4	32 scfm (15 dm^3/s, ANR)
Operating temperature‡:		
Plastic bowl		14°F to 125°F (-10°C to 52°C)
Metal bowl		14°F to 150°F (-10°C to 65.5°C)
Supply pressure (max):		
Plastic bowl		150 psig (10 bar)
Metal bowl		250 psig (17 bar)
Standard filtration		5 micron
Useful retention†:		0.4 US oz. (12 cm^3)
Adjusting range pressure:		0 to 30 psig (0 to 2 bar) 0 to 60 psig (0 to 4 bar) 0 to 125 psig (0 to 8 bar) 0 to 250 psig (0 to 17 bar)
Gauge port (2 each)**:		1/8 NPT, BSPP, BSPT
Weight:		0.42 lb (0.19 kg)

* Inlet pressure 145 psig (10 bar). Secondary pressure 91.3 psig (6.3 bar) and 14.5 psig (1 bar) pressure drop.
** Non-gauge option only.
‡ Units with square gauges: 5°F to 150°F (-15°C to 65.5°C)
† Useful retention refers to volume below the quiet zone baffle.

Air quality: Within ISO 8573-1: 1991 Class 3 (Particulates)
Within ISO 8573-1: 2001 Class 6 (Particulates)

Ordering Information:

P31EB 9 2 E G M B N 5 P

Basic Series
Global Modular Mini Filter / Regulator — P31EB

Thread Type
BSPP 1
BSPT 2
NPT 9

Port Size
1/4 2

Element
5µ Element E

Bowl Type
Poly Bowl With Bowl Guard G
Metal Bowl Without Sight Gauge M

Drain Type
Pulse Drain B
Manual Drain M

Relief
B Relieving
N Non-Relieving

Adjustment
N Non-Rising Knob

Mounting
P Plastic Panel Mount Nut

Adjustment Range

With Square Gauge		With Round Gauge	
psig	bar		
1 = 30*	V = 2*	Z	30 psig; 2 Bar; 0.2 MPa
3 = 60	S = 4	M	60 psig; 4 Bar; 0.4 MPa
5 = 125	T = 8	G	125 psig; 8 Bar; 0.8 MPa
		J§	232 psig; 16 Bar; 1.6 MPa
		Without Gauge	
		Y	30 psig; 2 Bar; 0.2 MPa
		L	60 psig; 4 Bar; 0.4 MPa
		N	125 psig; 8 Bar; 0.8 MPa
		H§	232 psig; 16 Bar; 1.6 MPa

* Regulator comes with gauge respective to the adjustment range selected.
§ Not available with poly bowl with bowl guard.

☐ Most popular.

Tel: +45 63 12 83 00 | Email: ps@hymatik.com | www.hymatik.com | Hvidkaervej 27a, DK-5250 Odense SV, Denmark

Material Specifications

Body	Aluminum
Adjustment knob	Acetal
Body cap	ABS
Bonnet	PBT
Plastic bowl	Polycarbonate
Metal bowl	Aluminum
Bowl guard	Nylon
Filter element	Polyethylene
Seals	Nitrile
Springs	Steel
Valve assembly	Brass / Nitrile
Diaphragm assembly	Brass / Nitrile
Panel nut	Acetal

⚠ WARNING

Product rupture can cause serious injury.
Do not connect regulator to bottled gas.
Do not exceed Maximum primary pressure rating.

CAUTION:

REGULATOR PRESSURE ADJUSTMENT – The working range of knob adjustment is designed to permit outlet pressures within their full range. Pressure adjustment beyond this range is also possible because the knob is not a limiting device. This is a common characteristic of most industrial regulators, and limiting devices may be obtained only by special design. For best performance, regulated pressure should always be set by increasing the pressure up to the desired setting.

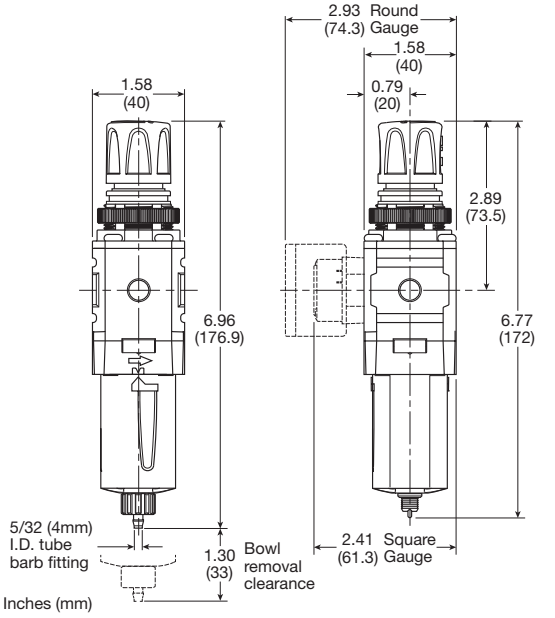

Manual Drain **Pulse Drain**

Flow Charts

P31 1/4 Filter / Regulator

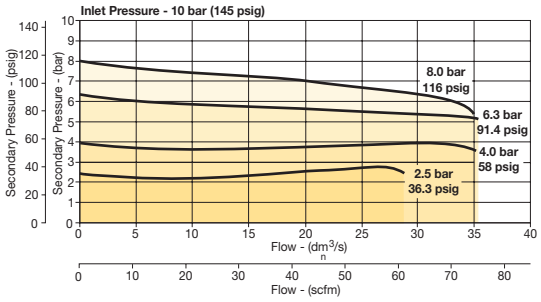

Repair and Service Kits

Plastic bowl / bowl guard manual drain	**P31KB00BGM**
Plastic bowl / bowl guard pulse drain	**P31KB00BGB**
Metal bowl / w/o sight gauge pulse drain	**P31KB00BMB**
5µ particle filter element	**P31KA00ESE**
Diaphragm repair kit - relieving	**P31KB00RB**
Diaphragm repair kit - non-relieving	**P31KB00RC**
Panel mount nut - aluminum	**P31KA00MM**
Panel mount nut - plastic	**P31KA00MP**
Angle bracket (attaches via panel nut)	**P31KB00MR**
C-bracket (fits to body)	**P31KA00MW**
T-bracket with body connector	**P31KA00MT**
Body connector	**P31KA00CB**

Gauges

Square flush mount gauge	0-4 bar	**K4511SCR04B**
	0-11 bar	**K4511SCR11B**
	0-60 psig	**K4511SCR060**
	0-160 psig	**K4511SCR160**

For best performance, regulated pressure should always be set by increasing the pressure up to the desired setting.

Tel: +45 63 12 83 00 | Email: ps@hymatik.com | www.hymatik.com | Hvidkaervej 27a, DK-5250 Odense SV, Denmark

B34 Filter / Regulator – Miniature

- Excellent water removal efficiency
- Diaphragm operated for fast operation
- Large diaphragm to valve area for precise regulation and high flow capacity
- Balanced valve design for precise regulation
- Space saving package offers both filter and regulator features in one integral unit
- Non-rising adjustment knob
- 1/8", 1/4" ports (NPT, BSPP)

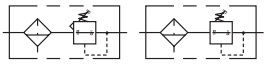



Port Size	Description ‡	Part Number
1/8"	Poly Bowl, Twist Drain	**B344-01AGC**
1/8"	Metal Bowl, Twist Drain	**B344-01DGC**
1/4"	Poly Bowl, Twist Drain	**B344-02AGC**
1/4"	Metal Bowl, Twist Drain	**B344-02DGC**

‡ For polycarbonate bowl, see caution in Engineering Section A.
NOTE: 1.218 Dia. (31 mm) hole required for panel mounting.

Operating information

Supply pressure (max):		
Zinc bowl (D)		0 to 300 psig (0 to 20.7 bar)
Poly bowl (A)		0 to 150 psig (0 to 10.3 bar)
Operating temperature:		40°F to 150°F (4.4°C to 52°C)
Reduced pressure range:		0 to 25 psig (0 to 1.7 bar) 0 to 60 psig (0 to 4.1 bar) 2 to 125 psig (0.15 to 8.5 bar)
Flow capacity†:		
High flow	1/8"	17 scfm (8 dm^3/s, ANR)
	1/4"	19 scfm (9 dm^3/s, ANR)
Bowl capacity:		1 oz.
Weight:	Zinc bowl	0.6 lb (0.27 kg)
	Poly bowl	0.3 lb (0.14 kg)

† scfm = Standard cubic feet per minute at 100 psig inlet and 75 psig no psig no flow secondary setting and 25% pressure drop.

( ) Bowl type

Ordering Information:

B34 | 4 | – | 02 | A | G | C | ☐

Number of Ports	
2 Ports	2
4 Ports	4

Port Type	
NPT	–
BSPP	G

Port Size	
1/8 inch	01
1/4 inch	02

Element	
Polycarbonate Bowl	A
Metal Without Sight Gauge	D

Element	
5	Micron

Reduced Pressure Range	
A	0-25 psig
B	0-60 psig
C	0-125 psig

Options	
Blank	None
G	Gauge
K	Non-Relieving
P	Panel Mount (plastic)
S	Auto Pulse Drain

☐ Most popular.

For inventory, lead times, and kit lookup, visit www.pdnplu.com

Parker Hannifin Corporation
Pneumatic Division
Richland, Michigan
www.parker.com/pneumatics

Tel: +45 63 12 83 00 | Email: ps@hymatik.com | www.hymatik.com | Hvidkaervej 27a, DK-5250 Odense SV, Denmark

Material Specifications

Adjusting Knob	Acetal
Body	Aluminum
Polycarbonate bowl (A)	Polycarbonate
Metal bowl (D)	Zinc
Elastomers	Buna N
Filter Element	Sintered polyethylene
Filter retainer, vane plate	Acetal
Innervalve, diaphragm, button, drain	Brass

Repair and Service Kits

Adjusting knob	**RRP-16-005-000**
Zinc bowl (D)	**BK505Y**
Zinc bowl with auto pulse drain (D)	**BK505SY**
Polycarbonate bowl (A)	**BK504Y**
Polycarbonate bowl with auto pulse drain (A)	**BK504SY**
Automatic pulse drain (Maximum pressure = 175 psig)	**RK504SY**
5 micron element (All)	**FRP-96-729**
1-1/2" dial size, 1/8" back connection 0 to 60 psig (0 to 400 kPa), gauge	**K4515N18060**
1-1/2" dial size, 1/8" back connection 0 to 160 psig (0 to 1100 kPa), gauge	**K4515N18160**
Mounting bracket kit (includes plastic panel nut)	**SA161X57**
Panel mount nut, plastic	**R05X51-P**
Panel mount nut, aluminum	**R05X51-A**
Non-relieving diaphragm, valve assembly (All)	**GRP-96-726**
Relieving diaphragm, valve assembly (All)	**GRP-96-725**
0-25 psig gauge	**GRP-95-111**
0-60 psig gauge	**GRP-96-718**
0-125 psig gauge	**GRP-96-717**

⚠ WARNING

Product rupture can cause serious injury.
Do not connect regulator to bottled gas.
Do not exceed Maximum primary pressure rating.

CAUTION:

REGULATOR PRESSURE ADJUSTMENT – The working range of knob adjustment is designed to permit outlet pressures within their full range. Pressure adjustment beyond this range is also possible because the knob is not a limiting device. This is a common characteristic of most industrial regulators, and limiting devices may be obtained only by special design. For best performance, regulated pressure should always be set by increasing the pressure up to the desired setting.

Flow Charts

B34 1/8" Filter / Regulator

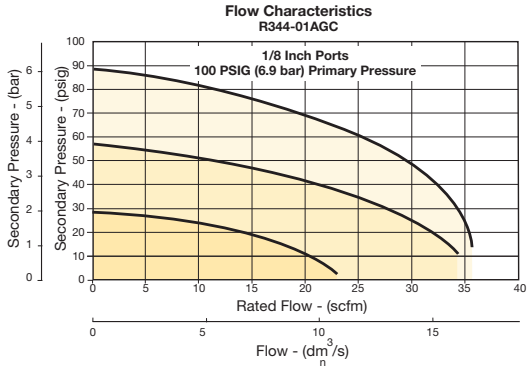

B34 1/4" Filter / Regulator

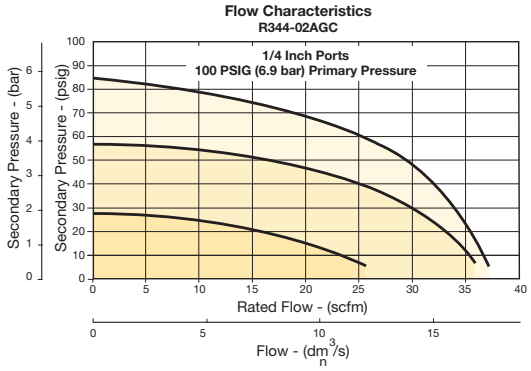

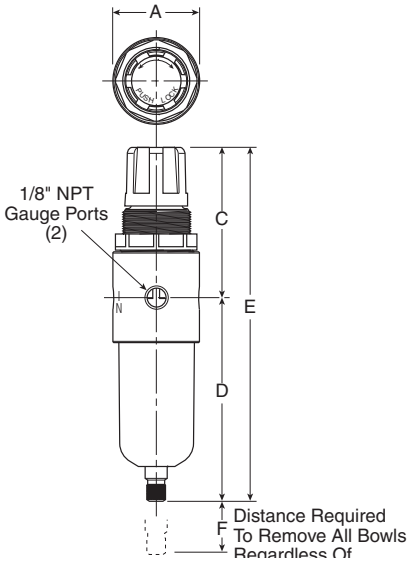

14E Filter / Regulator – Miniature

- Excellent water removal efficiency
- Unbalanced poppet standard
- Solid control piston for extended life
- Space saving package offers both filter and regulator features in one integral unit
- Non-rising adjustment knob
- Two full flow 1/8" gauge ports
- 1/8", 1/4" ports (NPT, BSPP, BSPT)

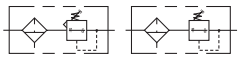



Port Size	Description ‡	Part Number
1/8"	Poly Bowl, Twist Drain	**14E01B13FC**
1/8"	Metal Bowl, Twist Drain	**14E03B13FC**
1/8"	Poly Bowl, Auto Pulse Drain	**14E05B13FC**
1/8"	Metal Bowl, Auto Pulse Drain	**14E07B13FC**
1/4"	Poly Bowl, Twist Drain	**14E11B13FC**
1/4"	Metal Bowl, Twist Drain	**14E13B13FC**
1/4"	Poly Bowl, Auto Pulse Drain	**14E15B13FC**
1/4"	Metal Bowl, Auto Pulse Drain	**14E17B13FC**

‡ For polycarbonate bowl, see caution in Engineering Section A.

NOTE: 1.218 Dia. (31 mm) hole required for panel mounting.

Operating information

Supply pressure (max):		
Plastic bowl		0 to 150 psig (0 to 10.3 bar)
Metal bowl		0 to 250 psig (0 to 17.2 bar)
Secondary pressure ranges		
Standard		2 to 125 psig (0 to 8.6 bar)
Medium		1 to 30 psig (0 to 2.1 bar)
Medium		1 to 60 psig (0 to 4.1 bar)
Low		1 to 15 psig (0 to 1 bar)
Operating temperature:		
Plastic bowl		32°F to 125°F (0°C to 52°C)
Metal bowl		32°F to 175°F (0°C to 80°C)
Flow capacity†:		
High flow	1/8"	16 scfm (7.6 dm^3/s, ANR)
	1/4"	18 scfm (8.5 dm^3/s, ANR)
Bowl capacity:		1 oz.
Auto pulse drain tube barb		1/8 inch
Gauge ports (2):		1/8 inch (can be used as additional full flow)
Weight:		0.4 lb (0.18 kg)

† scfm = Standard cubic feet per minute at 100 psig inlet and 10 psig pressure drop.

Ordering Information:

14E | **1** | **1** | **B** | **13** | **F** | **C** | ☐ | ☐ | ☐

Port Size

1/8 inch	0
1/4 inch	1

Bowl Options

Poly Bowl, Twist Drain	1
Poly Bowl, Auto Pulse Drain	5
Metal Bowl, Twist Drain	3
Metal Bowl, Auto Pulse Drain	7

Element

40 Micron	A
5 Micron	B
Adsorber	Z

Pressure Range

Without Gauge		With Gauge*	
30 psig	10	30 psig	15
60 psig	11	60 psig	16
15 psig	12	15 psig	17
125 psig	13	125 psig	18

* Not available with BSPP or BSPT port types.

Relief

F	Relieving
G	Non-Relieving
H*	Low Temp. Relieving

* Twist drain only.

Engineering Level

C	Current

Port Type

Blank	NPT
1	BSPP
2	BSPT

Options

Blank	No options
L†	Preset Non-Adjustable
P†	Preset Adjustable
S†	Pressure Limiter Max. Adjustable
T†	Pressure Limiter Max. Non-Adjustable

† Inlet pressure is 100 psig. For other pressures contact factory.

Preset / Pressure Limited

Blank	None
XXX*	Preset Pressure
XXX*	Pressure Limited

* Available preset / pressure limited range, 10 to 90 psig in 5 psig increments. For higher pressures, contact factory.

(Example: 065 = 65 psig)

Spring Type by Preset / Limited Pressure:
For Preset / Limited Pressure 10 to 25 use 30 psi spring
For Preset / Limited Pressure 26 to 50 use 60 psi spring
For Preset / Limited Pressure 51 to 90 use 125 psi spring

☐ Most popular.

For inventory, lead times, and kit lookup, visit www.pdnplu.com

Parker Hannifin Corporation
Pneumatic Division
Richland, Michigan
www.parker.com/pneumatics

Tel: +45 63 12 83 00 | Email: ps@hymatik.com | www.hymatik.com | Hvidkaervej 27a, DK-5250 Odense SV, Denmark

Material Specifications

Adjusting nut	Brass
Adjusting stem & spring	Steel
Body	Zinc
Bonnet, knob, seat, piston, holder & deflector	Plastic
Transparent bowl	Polycarbonate
Metal bowl (without sight gauge)	Zinc
Twist drain, body & stem	Plastic
Twist drain, seals	Nitrile
Auto pulse drain, piston & seals	Nitrile
Auto pulse drain, stem, seat, adaptor & washers	Aluminum
5 Micron elements (standard)	Plastic
40 Micron elements (optional)	Plastic
Adsorber elements (optional)	Activated charcoal
Seals	Nitrile

Repair and Service Kits

Bonnet tamperproof kit	**P01265**
Poly bowl / auto drain	**PS408BP**
Poly bowl / twist drain	**PS404P**
Metal bowl / auto drain	**PS451BP**
Metal bowl / twist drain	**PS447BP**
40 micron element	**PS401P**
5 micron element	**PS403P**
Adsorber element	**PS452P**
30 psig (0 to 2.1 bar), gauge	**K4515N18030**
60 psig (0 to 4.1 bar)	**K4515N18060**
160 psig (0 to 11.0 bar) element	**K4515N18160**
Mounting bracket kit* (includes panel mount nut)	**PS417BP**
Panel mount nut*	**P78652**
Unbalanced, non-relieving	**PS428P**
Unbalanced, relieving	**PS426P**
1- 15 psig spring (yellow)	**P01176**
1- 30 psig spring (black)	**P01175**
1- 60 psig spring (white)	**P01174**
2- 125 psig spring (gold)	**P01173**

***Tighten panel mount nut 2.8 to 3.4 Nm (25 to 30 in-lbs) of torque.**

⚠ WARNING

Product rupture can cause serious injury.
Do not connect regulator to bottled gas.
Do not exceed Maximum primary pressure rating.

CAUTION:

REGULATOR PRESSURE ADJUSTMENT – The working range of knob adjustment is designed to permit outlet pressures within their full range. Pressure adjustment beyond this range is also possible because the knob is not a limiting device. This is a common characteristic of most industrial regulators, and limiting devices may be obtained only by special design. For best performance, regulated pressure should always be set by increasing the pressure up to the desired setting.

Flow Charts

14E 1/8" Filter / Regulator

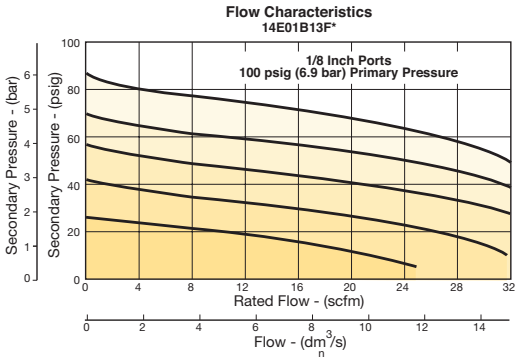

14E 1/4" Filter / Regulator

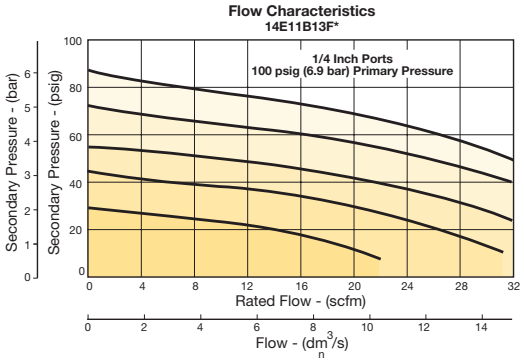

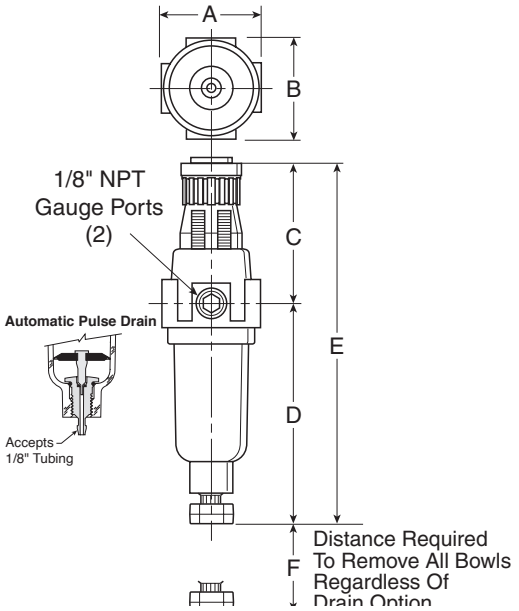

For inventory, lead times, and kit lookup, visit www.pdnplu.com

Parker Hannifin Corporation
Pneumatic Division
Richland, Michigan
www.parker.com/pneumatics

Tel: +45 63 12 83 00 | Email: ps@hymatik.com | www.hymatik.com | Hvidkaervej 27a, DK-5250 Odense SV, Denmark

05E Filter / Regulator – Economy

- Space saving package offers both filter and regulator features for optimal performance
- Excellent water removal efficiency
- Rolling diaphragm for extended life
- Removable non-rising knob for tamper resistance
- Quick response, and accurate pressure regulation regardless of changing flow or inlet pressure
- 40 micron filter element standard
- 1/4", 3/8" ports (NPT)



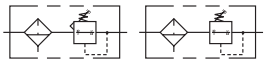

Port Size	Description ‡	Part Number
1/4"	Poly Bowl, Metal Guard, Twist Drain	**05E12A13AB**
1/4"	Poly Bowl, Metal Guard, Auto Pulse Drain	**05E1PA13AB**
3/8"	Poly Bowl, Metal Guard, Twist Drain	**05E22A13AB**
3/8"	Poly Bowl, Metal Guard, Auto Pulse Drain	**05E2PA13AB**

‡ For polycarbonate bowl, see caution in Engineering Section A.

NOTE: 1.53 Dia. (39 mm) hole required for panel mounting.

Operating information

Supply pressure (max):		
Plastic bowl		0 to 150 psig (0 to 10.3 bar)
Metal bowl		0 to 250 psig (0 to 17.2 bar)
Operating temperature:		
Plastic bowl		32°F to 125°F (0°C to 52°C)
Metal bowl		32°F to 175°F (0°C to 80°C)
Flow capacity†:		
High flow	1/4"	30 scfm (14.2 dm^3/s, ANR)
	3/8"	40 scfm (18.9 dm^3/s, ANR)
Bowl capacity:		2 oz.
Auto pulse drain tube barb:		1/8 inch
Gauge ports (2):		1/4 inch
Sump capacity:		0.9 oz.
Weight:		1.35 lb (0.6 kg)

† scfm = Standard cubic feet per minute at 100 psig inlet, 90 psig no flow secondary setting and 10 psig pressure drop.

Ordering Information:

05E | **1** | **2** | **A** | **13** | **A** | **B** | **[ ]**

Port Size

1/4 inch	1
3/8 inch	2

Bowl Options

Poly Bowl, Metal Bowl Guard, Twist Drain	2
Poly Bowl, Metal Bowl Guard, Auto Pulse Drain	P

Element

40 Micron	A

Pressure Range

Without Gauge		With Gauge*	
11	60 psig	16	60 psig
13	125 psig	18	125 psig

* Includes 1-1/2" dial face gauge.

Relief

A	Relieving

Engineering Level

B	Current

Port Type

Blank	NPT

☐ Most popular.

Tel: +45 63 12 83 00 | Email: ps@hymatik.com | www.hymatik.com | Hvidkaervej 27a, DK-5250 Odense SV, Denmark

Material Specifications

Adjusting stem	Steel
Body	Zinc
Bonnet, internal parts	Plastic
Transparent bowl	Polycarbonate
Bowl guard	Steel
Collar	Plastic
Diaphragm	Nitrile
Drain	Plastic
40 micron element (standard)	Plastic
5 micron element (optional)	Plastic
Adsorber element (optional)	Activated charcoal
Knob	Plastic
Seals	Nitrile
Sight gauge	Polyamide (nylon)
Springs, poppet & control	Steel

Repair and Service Kits

Bowl guard kit	**PS905P**
Poly bowl, automatic pulse drain	**PS995P**
Poly bowl, twist drain	**PS932P**
Auto pulse drain	**PS998P**
Twist drain	**PS512P**
40 micron element	**PS901P**
5 micron element	**PS902P**
Adsorber element	**PS931P**
Sight gauge kit	**PS914P**
1-1/2" dial face 30 psig (0 to 2.1 bar), gauge	**K4515N14030**
1-1/2" dial face 60 psig (0 to 4.1 bar), gauge	**K4515N14060**
1-1/2" dial face 160 psig (0 to 11.0 bar), gauge	**K4515N14160**
1-1/2" dial face 300 psig (0 to 20.7 bar), gauge	**K4515N14300**
2" dial face 60 psig (0 to 4.1 bar), gauge	**K4520N14060**
2" dial face 160 psig (0 to 11.0 bar), gauge	**K4520N14160**
2" dial face 300 psig (0 to 20.7 bar), gauge	**K4520N14300**
Mounting bracket kit (includes panel mount nut)	**PS963P**
Panel mount nut – metal	**PS964P**
1-30 psig spring	**P04427**
1-60 psig spring	**P04426**
2-125 psig spring	**P04425**
2-200 psig spring	**P02934**
Relieving service kit	**PS908P**
Bonnet assembly kit	**PS915P**

⚠ WARNING

Product rupture can cause serious injury.
Do not connect regulator to bottled gas.
Do not exceed Maximum primary pressure rating.

CAUTION:

REGULATOR PRESSURE ADJUSTMENT – The working range of knob adjustment is designed to permit outlet pressures within their full range. Pressure adjustment beyond this range is also possible because the knob is not a limiting device. This is a common characteristic of most industrial regulators, and limiting devices may be obtained only by special design. For best performance, regulated pressure should always be set by increasing the pressure up to the desired setting.

Flow Charts

05E 1/4" Filter / Regulator

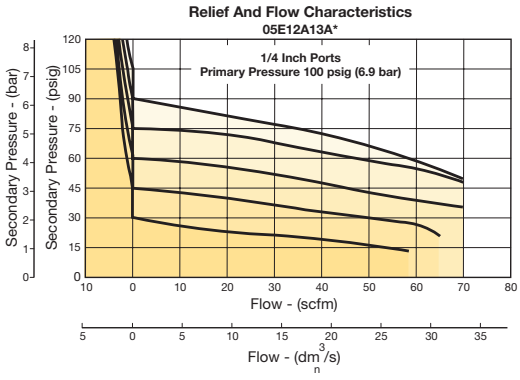

05E 3/8" Filter / Regulator

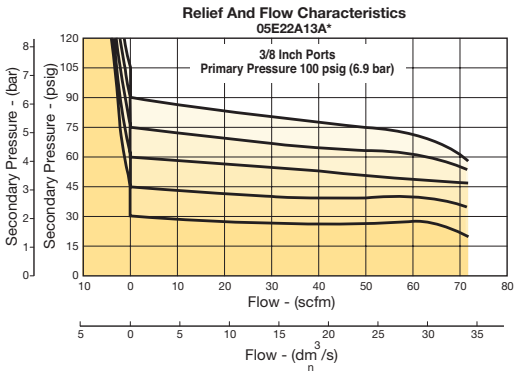

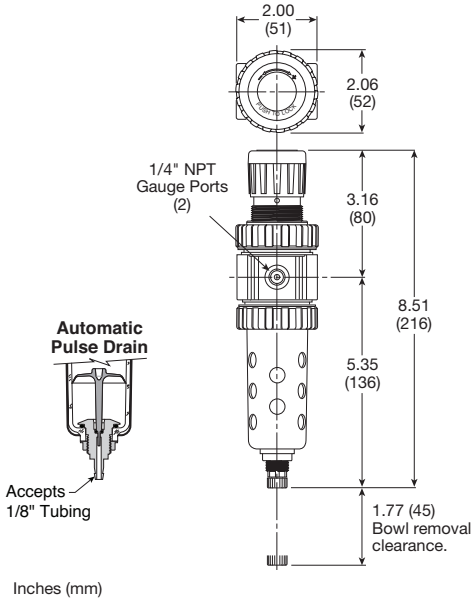

For inventory, lead times, and kit lookup, visit www.pdnplu.com

Parker Hannifin Corporation
Pneumatic Division
Richland, Michigan
www.parker.com/pneumatics

Tel: +45 63 12 83 00 | Email: ps@hymatik.com | www.hymatik.com | Hvidkaervej 27a, DK-5250 Odense SV, Denmark

02L Lubricator – Miniature

- Extends the service life of air operated hand tools
- Reduces downtime of air operated equipment, saves money
- Small / lightweight
- Automatic lubrication with air tool operation
- Adjustable oil flow
- Corrosion resistant
- Full swivel outlet port
- Integral 1/4", 3/8" ports (NPT, BSPT)

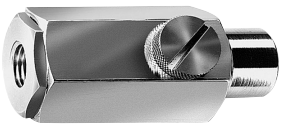



Application

In-Line Lubricators assure proper lubrication for small pneumatic hand tools. These in-line lubricators put the oil source right at the tool. Oil capacity is 1/4 oz. (1 ml), enough to last through an average 8-hour shift. This lubricator requires cyclical or intermittent airflow for proper operation, and consequently works best when installed at the tool inlet or on a short hose near the tool. The 02L cannot be filled under pressure.

Operating information

Supply pressure (max):		200 psig (13.8 bar)
Operating temperature:		32°F to 150°F (0°C to 65.6°C)
Flow capacity†:		
High flow	1/4"	29 scfm (13.6 dm^3/s, ANR)
	3/8"	30 scfm (14.2 dm^3/s, ANR)
Oil capacity:		0.25 oz. (7.4 cm^3)
Weight:		0.2 lb (0.1 kg)

† scfm = Standard cubic feet per minute at 90 psig inlet and 5 psig pressure drop.

Port Size	Description	Part Number
1/4"	Female Threads Inlet / Female Threads Outlet	**02LFB**
1/4"	Female Threads Inlet / Male Threads Outlet	**02L1B**
3/8"	Female Threads Inlet / Male Threads Outlet	**02L2B**

☐ Most popular.

For inventory, lead times, and kit lookup, visit www.pdnplu.com

Parker Hannifin Corporation
Pneumatic Division
Richland, Michigan
www.parker.com/pneumatics

Tel: +45 63 12 83 00 | Email: ps@hymatik.com | www.hymatik.com | Hvidkaervej 27a, DK-5250 Odense SV, Denmark

Material Specifications

Body	Aluminum
Seals	Nitrile

Suggested Lubricant ..... **F442 Oil**

Petroleum based oil of 100 to 200 SUS viscosity at 100°F (38°C) and an aniline point greater than 200°F (93°C)

(DO NOT USE OILS WITH ADDITIVES, COMPOUNDED OILS CONTAINING SOLVENTS, GRAPHITE, DETERGENTS, OR SYNTHETIC OILS.)

Replacement Kits

Fill plug kit, brass fill plug and o-ring	**PS434**
O-ring repair kit	**PS435**

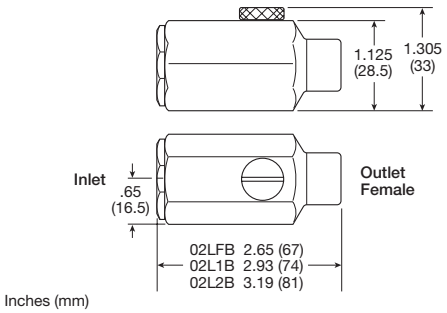

Inches (mm)

Flow Charts

02L 1/4" In-Line Lubricator

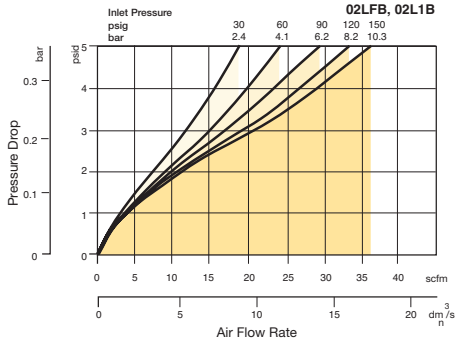

02L 3/8" In-Line Lubricator

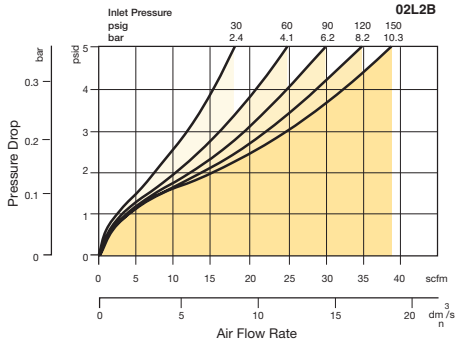

Tel: +45 63 12 83 00 | Email: ps@hymatik.com | www.hymatik.com | Hvidkaervej 27a, DK-5250 Odense SV, Denmark

P31 Lubricators – Mini

- Integral 1/4" ports (NPT, BSPP & BSPT)
- Robust but lightweight aluminum construction
- Proportional oil delivery over a wide range of air flows
- Finger tip ratchet control for precise oil drip rate adjustment

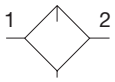

Lubricator with drain



Port Size	Description	Part Number
1/4"	Poly Bowl - No Drain	**P31LB92LGNN**
1/4"	Metal Bowl - No Drain	**P31LB92LMNN**

Operating information

Flow capacity*:	
1/4	40 scfm (19 dm^3/s, ANR)
Operating temperature:	
Plastic bowl	14°F to 125°F (-10°C to 52°C)
Metal bowl	14°F to 150°F (-10°C to 65.5°C)
Supply pressure (max):	
Plastic bowl	150 psig (10 bar)
Metal bowl	250 psig (17 bar)
Bowl capacity:	0.6 US oz. (18 cm^3)
Weight:	0.29 lb (0.13 kg)

*** Inlet pressure 91.3 psig (6.3 bar). Pressure drop 4.9 psig (0.34 bar).**

Ordering Information:

P31LB 9 2 L G N N

Basic Series	
Global Modular Mini Lubricator	P31LB

Thread Type	
BSPP	1
BSPT	2
NPT	9

Port Size	
1/4	2

Lube Type	
Oil Mist Standard Sight Dome	L

Bowl Type	
G	Poly Bowl With Bowl Guard
M	Metal Bowl Without Sight Gauge

Drain Type	
N	No Drain Closed End

Mounting	
N	No Bracket

Suggested Lubricant .....**F442 Oil**
Petroleum based oil of 100 to 200 SUS viscosity at 100°F (38°C) and an aniline point greater than 200°F (93°C)
(DO NOT USE OILS WITH ADDITIVES, COMPOUNDED OILS CONTAINING SOLVENTS, GRAPHITE, DETERGENTS, OR SYNTHETIC OILS.)

☐ Most popular.

Tel: +45 63 12 83 00 | Email: ps@hymatik.com | www.hymatik.com | Hvidkaervej 27a, DK-5250 Odense SV, Denmark

Material Specifications

Body	Aluminum
Body cap	ABS
Plastic bowl	Polycarbonate
Metal bowl	Aluminum
Seals	Nitrile
Sight dome	Polycarbonate
Suggested lubricant	ISO / ASTM VG32
Pick-up filter	Sintered bronze

Repair and Service Kits

Plastic bowl / bowl guard no drain	**P31KB00BGN**
Metal bowl / w/o sight gauge no drain	**P31KB00BMN**
Drip control assembly	**P32KA00PG**
Fill plug	**P31KA00PL**
C-bracket (fits to body)	**P31KA00MW**
T-bracket with body connector	**P31KA00MT**
Body connector	**P31KA00CB**
Oil (1 quart)	**F442001**
Oil (1 gallon)	**F442002**
Oil (12 quart case)	**F442003**
Oil (4 gallon case)	**F442005**

Flow Charts

P31LB 1/4" Lubricator

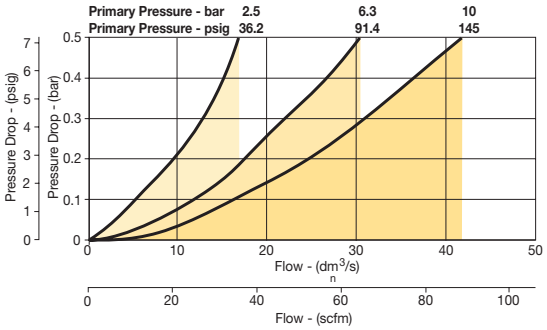

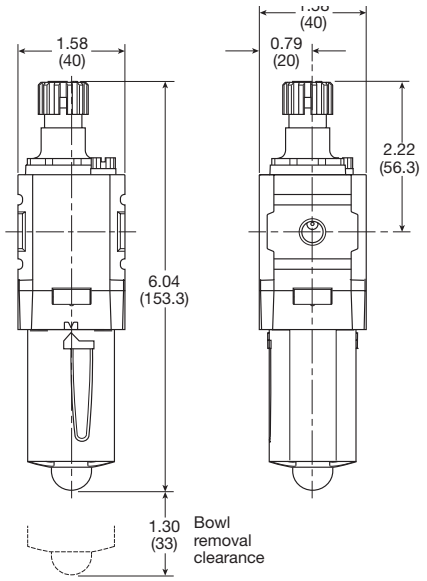

Inches (mm)

For inventory, lead times, and kit lookup, visit www.pdnplu.com

Parker Hannifin Corporation
Pneumatic Division
Richland, Michigan
www.parker.com/pneumatics

Tel: +45 63 12 83 00 | Email: ps@hymatik.com | www.hymatik.com | Hvidkaervej 27a, DK-5250 Odense SV, Denmark

04L Mist Lubricators – Miniature

- Proportional oil delivery over a wide range of air flows
- Precision needle valve assures repeatable oil delivery and provides simple adjustment of delivery rate
- Ideal for low and high flow applications with changing air flow
- Transparent sight dome for 360° visibility
- Integral 1/8", 1/4" ports (NPT, BSPP, BSPT)





Port Size	Description ‡	Part Number
1/8"	Poly Bowl, No Drain	**04L00GB**
1/8"	Metal Bowl, No Gauge, Twist Drain	**04L03GB**
1/4"	Poly Bowl, No Drain	**04L10GB**
1/4"	Metal Bowl, No Gauge, Twist Drain	**04L13GB**

‡ For polycarbonate bowl and sight dome, see caution in Engineering Section A.

Operating information

Supply pressure (max):		
Plastic bowl		150 psig (10.3 bar)
Metal bowl		250 psig (17.2 bar)
Operating temperature:		
Plastic bowl		32°F to 125°F (0°C to 52°C)
Metal bowl		32°F to 175°F (0°C to 80°C)
Flow capacity†:		
High flow	1/8"	20 scfm (9.4 dm^3/s, ANR)
	1/4"	20 scfm (9.4 dm^3/s, ANR)
Minimum flow		0.5 scfm (0.24 dm^3/s, ANR) at 100 psig (6.9 bar)
Bowl capacity:		1 oz.
Weight:		0.4 lb (0.18 kg)

† scfm = Standard cubic feet per minute at 90 psig inlet and 5 psig pressure drop.

Ordering Information:

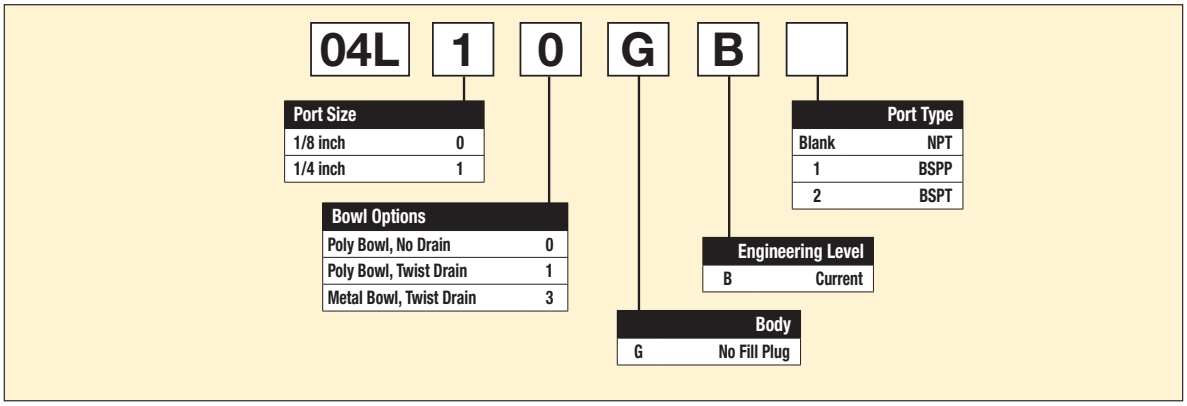

Suggested Lubricant .....**F442 Oil**
Petroleum based oil of 100 to 200 SUS viscosity at 100°F (38°C) and an aniline point greater than 200°F (93°C)
(DO NOT USE OILS WITH ADDITIVES, COMPOUNDED OILS CONTAINING SOLVENTS, GRAPHITE, DETERGENTS, OR SYNTHETIC OILS.)

☐ Most popular.

For inventory, lead times, and kit lookup, visit www.pdnplu.com

Parker Hannifin Corporation
Pneumatic Division
Richland, Michigan
www.parker.com/pneumatics

Tel: +45 63 12 83 00 | Email: ps@hymatik.com | www.hymatik.com | Hvidkaervej 27a, DK-5250 Odense SV, Denmark

Material Specifications

Body	Zinc
Transparent bowls	Polycarbonate
Metal bowl (without sight gauge)	Zinc
Drains, twist – body & nut	Plastic
Seals	Nitrile
Sight dome	Polycarbonate

Repair and Service Kits

Poly bowl / no drain kit	**PS421P**
Poly bowl / twist drain kit	**PS420P**
Metal bowl / twist drain (no sight gauge) kit	**PS447BP**
Mounting bracket kit	**PS419**
Oil (1 quart)	**F442001**
Oil (1 gallon)	**F442002**
Oil (12 quart case)	**F442003**
Oil (4 gallon case)	**F442005**

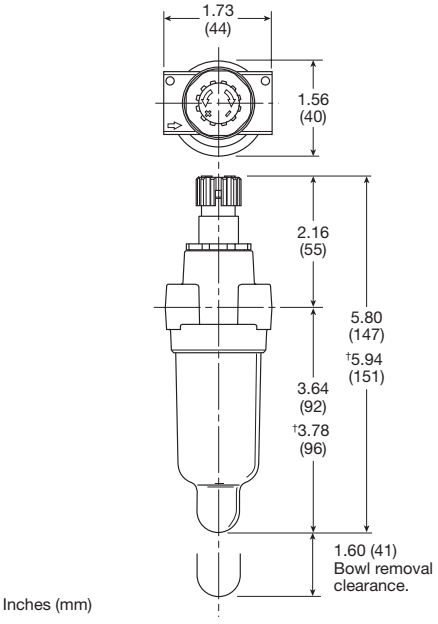

Inches (mm)

Flow Charts

04L 1/8" Lubricator

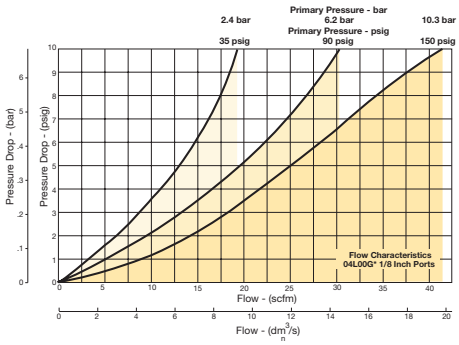

04L 1/4" Lubricator

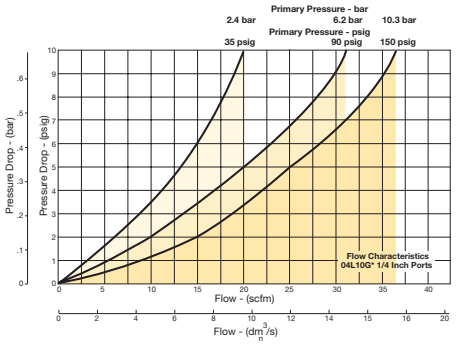

Tel: +45 63 12 83 00 | Email: ps@hymatik.com | www.hymatik.com | Hvidkaervej 27a, DK-5250 Odense SV, Denmark

Parker Hannifin Corporation
Pneumatic Division
Richland, Michigan
www.parker.com/pneumatics

Tel: +45 63 12 83 00 | Email: ps@hymatik.com | www.hymatik.com | Hvidkaervej 27a, DK-5250 Odense SV, Denmark



Air Preparation Products
Regulators Products

General	K2-K41
Dial	K42-K49
Pilot	K50-K63
Proportional	K64-K89
Precision	K90-K103
Water	K104-K109

K
Regulator Products

Tel: +45 63 12 83 00 | Email: ps@hymatik.com | www.hymatik.com | Hvidkaervej 27a, DK-5250 Odense SV, Denmark

14R Regulators – Miniature

- Unbalanced poppet standard
- Solid control piston with lip seal for extended life
- Non-rising adjusting knob
- Compact design
- Very easy to service
- 1/8", 1/4" ports (NPT, BSPP, BSPT)



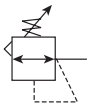

Port Size	Description	Part Number
1/8"	Without Gauge	**14R013FC**
1/8"	With Gauge	**14R018FC**
1/4"	Without Gauge	**14R113FC**
1/4"	With Gauge	**14R118FC**

NOTE: 1.218 Dia. (31 mm) hole required for panel mounting.

Operating information

Supply pressure (max):		0 to 300 psig (0 to 20.7 bar)
Secondary pressure ranges		
Standard		2 to 125 psig (0 to 8.6 bar)
Medium		1 to 60 psig (0 to 4.1 bar)
Medium		1 to 30 psig (0 to 2.1 bar)
Low		1 to 15 psig (0 to 1 bar)
Operating temperature:		32°F to 125°F (0°C to 52°C)
Low temperature		-4°F to 125°F (-20°C to 52°C)
Flow capacity†:		
High flow	1/8"	13 scfm (6.1 dm³/s, ANR)
	1/4"	15 scfm (7.1 dm³/s, ANR)
Gauge ports (2):		1/8 or 1/4 inch
Weight:		0.3 lb (0.14 kg)

† scfm = Standard cubic feet per minute at 100 psig inlet, 90 psig no flow secondary setting and 10 psig pressure drop.

Ordering Information:

14R | **1** | **13** | **F** | **C** | ☐ | ☐ | ☐

Port Size

1/8 Inch Pipe, 1/8 Inch Gauge Port	0
1/4 Inch Pipe, 1/8 Inch Gauge Port	1
1/4 Inch Pipe, 1/4 Inch Gauge Port	B
1/8 Inch Pipe, No Gauge Port	C
Manifold Mounting	M

Pressure Range

Yellow Knob		Black Knob	
Without Gauge			
30 psig	10	30 psig	B0
60 psig	11	60 psig	B1
15 psig	12	15 psig	B2
125 psig	13	125 psig	B3
With Gauge*			
30 psig	15	30 psig	B5
60 psig	16	60 psig	B6
15 psig	17	15 psig	B7
125 psig	18	125 psig	B8

* Not available with BSPP or BSPT port types.

Relief

F	Relieving
G	Non-Relieving
H	Low Temp. Relieving
J	Low Temp. Non-Relieving

Engineering Level

C	Current

Port Type

Blank	NPT
1	BSPP
2	BSPT

Options

Blank	No Options
L†	Preset Non-Adjustable
P†	Preset Adjustable
S†	Pressure Limiter Max. Adjustable
T†	Pressure Limiter Max. Non-Adjustable

† Inlet pressure is 100 psig. For other pressures contact factory.

Preset / Pressure Limited

Blank	None
XXX*	Preset Pressure
XXX*	Pressure Limited

* Available preset / pressure limited range, 10 to 90 psig in 5 psig increments. For higher pressures, contact factory.
(Example: 065 = 65 psig)

Spring Type by Preset / Limited Pressure:
For Preset / Limited Pressure 10 to 25 use 30 psi spring
For Preset / Limited Pressure 26 to 50 use 60 psi spring
For Preset / Limited Pressure 51 to 90 use 125 PSI Spring

☐ Most popular.

For inventory, lead times, and kit lookup, visit www.pdnplu.com

Parker Hannifin Corporation
Pneumatic Division
Richland, Michigan
www.parker.com/pneumatics

Tel: +45 63 12 83 00 | Email: ps@hymatik.com | www.hymatik.com | Hvidkaervej 27a, DK-5250 Odense SV, Denmark

Material Specifications

Adjusting nut	Brass
Adjusting stem & spring	Steel
Body	Zinc
Bonnet, seat, piston & valve poppet	Plastic
Seals	Nitrile

Repair and Service Kits

Bonnet assembly kit	**L01369**
Bonnet tamperproof kit	**P01265**
30 psig gauge, 1/8" NPT (0 to 2.1 bar)	**K4515N18030**
60 psig gauge, 1/8" NPT (0 to 4.1 bar)	**K4515N18060**
160 psig gauge, 1/8" NPT (0 to 11.0 bar)	**K4515N18160**
60 psig gauge, 1/4" NPT (0 to 4.1 bar)	**K4520N14060**
160 psig gauge, 1/4" NPT (0 to 11.0 bar)	**K4520N14160**
Mounting bracket kit* (includes panel mount nut)	**PS417BP**
Plastic panel mount nuts*	**P78652**
Metal panel mount nuts*	**P01531**
Unbalanced non-relieving, poppet / piston kit	**PS428P**
Unbalanced relieving, poppet / piston kit	**PS426P**
1-15 psig spring (yellow)	**P01176**
1-30 psig spring (black)	**P01175**
1-60 psig spring (white)	**P01174**
2-125 psig spring (gold)	**P01173**

* Tighten panel mount nut 2.8 to 3.4 Nm (25 to 30 in-lbs) of torque.

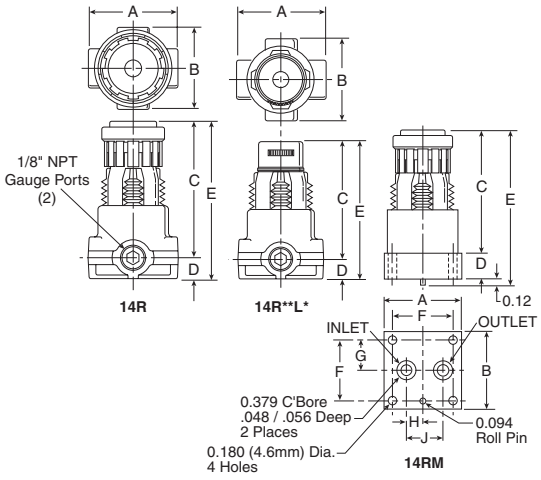

Flow Charts

1/8" Ports

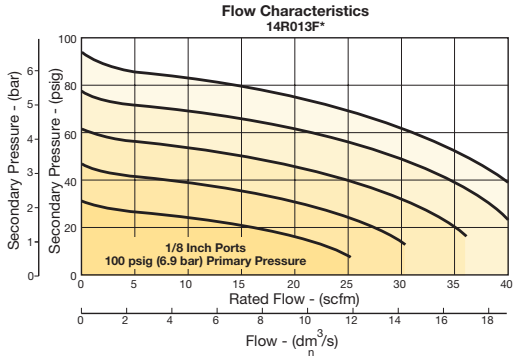

1/4" Ports

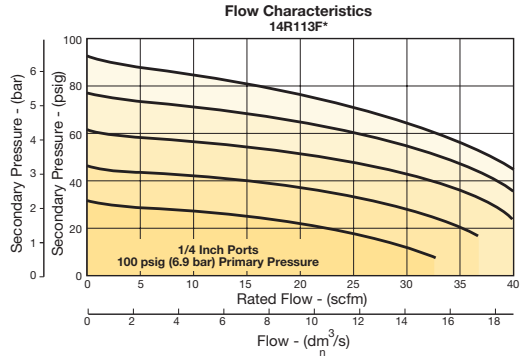

⚠ WARNING

Product rupture can cause serious injury.
Do not connect regulator to bottled gas.
Do not exceed Maximum primary pressure rating.

CAUTION:

REGULATOR PRESSURE ADJUSTMENT – The working range of knob adjustment is designed to permit outlet pressures within their full range. Pressure adjustment beyond this range is also possible because the knob is not a limiting device. This is a common characteristic of most industrial regulators, and limiting devices may be obtained only by special design. For best performance, regulated pressure should always be set by increasing the pressure up to the desired setting.

Tel: +45 63 12 83 00 | Email: ps@hymatik.com | www.hymatik.com | Hvidkaervej 27a, DK-5250 Odense SV, Denmark

P3A-R Regulators – Miniature

- Lightweight plastic body
- Non-rising adjusting knob
- Solid control piston with lip seal for extended life
- Unbalanced poppet standard
- Two full flow 1/8" gauge ports
- Reverse flow capability
- 1/8", 1/4" ports (NPT)



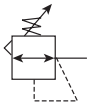

Port Size	Description	Part Number
1/4"	Without Gauge	**P3A-RN92YNNN**

NOTE: 1.218 Dia. (31 mm) hole required for panel mounting.

Operating information

Supply pressure (max):		120 psig (8.3 bar)
Secondary pressure:		
15 psig spring		1 to 15 psig (0.07 to 1.0 bar)
30 psig spring		6 to 30 psig (0.4 to 2.1 bar)
60 psig spring		6 to 60 psig (0.4 to 4.1 bar)
110 psig spring		6 to 110 psig (0.4 to 7.6 bar)
Operating temperature:		32°F to 125°F (0°C to 52°C)
Flow capacity†:		
High flow	1/8"	13 scfm (6.1 dm³/s, ANR)
	1/4"	15 scfm (7.1 dm³/s, ANR)
Gauge ports (2):		1/8 inch
Weight:		0.3 lb (0.14 kg)

† scfm = Standard cubic feet per minute at 100 psig inlet, 90 psig no flow secondary setting and 10 psig pressure drop.

Ordering Information:

P3A-RN **9** **1** **Y** **N** **N** **N** ☐

Port Type	
NPT Female	9

Port Size	
1/8 inch	1
1/4 inch	2

Relief	
Non-Relieving, Black Knob	B
Relieving, Black Knob	N
Non-Relieving, Yellow Knob	Q
Relieving, Yellow Knob	Y

Pressure / Gauge	
Without Gauge	
15 psig (0 to 1 bar)	A
30 psig (0 to 2 bar)	Y
60 psig (0 to 4 bar)	L
120 psig (0 to 8 bar)	N
With Gauge	
15 psig (0 to 1 bar)	B
30 psig (0 to 2 bar)	Z
60 psig (0 to 4 bar)	M
120 psig (0 to 8 bar)	G

Options	
N	No Options
L†	Preset Non-Adjustable
P†	Preset Adjustable
S†	Pressure Limiter Max. Adjustable
T†	Pressure Limiter Max. Non-Adjustable

† Inlet pressure is 100 psig. For other pressures contact factory.

Option	
N	None

Preset / Pressure Limited	
Blank	None
XXX*	Preset Pressure
XXX*	Pressure Limited

* Available preset / pressure limited range, 10 to 90 psig in 5 psig increments. For higher pressures, contact factory.
(Example: 065 = 65 psig)

☐ Most popular.

For inventory, lead times, and kit lookup, visit www.pdnplu.com

Parker Hannifin Corporation
Pneumatic Division
Richland, Michigan
www.parker.com/pneumatics

Tel: +45 63 12 83 00 | Email: ps@hymatik.com | www.hymatik.com | Hvidkaervej 27a, DK-5250 Odense SV, Denmark

Material Specifications

Adjusting nut	Brass
Adjusting stem & spring	Steel
Poppet return spring	Stainless Steel
Body	Plastic
Bonnet, seat & piston	Plastic
Seals	Nitrile
Valve poppet	Plastic & nitrile

Repair and Service Kits

30 psig gauge, 1/8" NPT (0 to 2.1 bar)	**K4515N18030**
60 psig gauge, 1/8" NPT (0 to 4.1 bar)	**K4515N18060**
160 psig gauge, 1/8" NPT (0 to 11.0 bar)	**K4515N18160**
Mounting bracket kit* (includes panel mount nut)	**PS417BP**
Panel mount nut*	**P78652**
Unbalanced non-relieving, poppet / piston kit	**PS428P**
Unbalanced relieving, poppet / piston kit	**PS426P**
1-15 psig Spring (yellow)	**P01176**
1-30 psig spring (black)	**P01175**
1-60 psig spring (white)	**P01174**
5-110 psig spring (gold)	**P01173**

* Tighten panel mount nut 2.8 to 3.4 Nm (25 to 30 in-lbs) of torque.

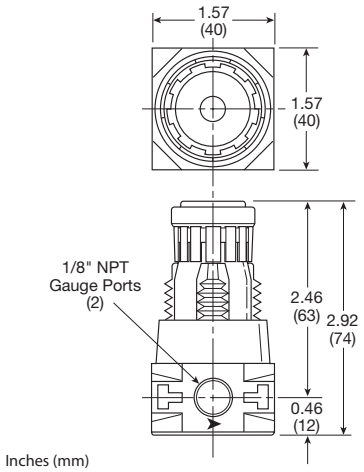

Flow Charts

1/8" port

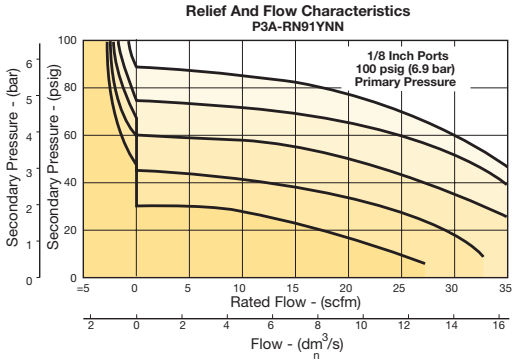

1/4" port

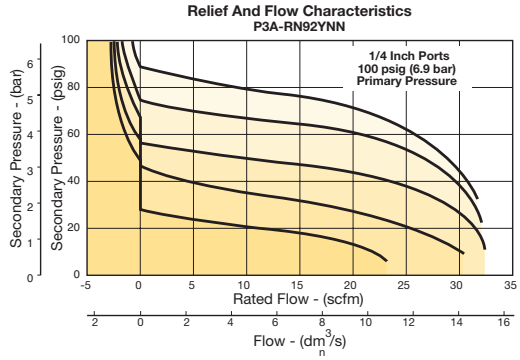

⚠ WARNING

Product rupture can cause serious injury.
Do not connect regulator to bottled gas.
Do not exceed Maximum primary pressure rating.

CAUTION:

REGULATOR PRESSURE ADJUSTMENT – The working range of knob adjustment is designed to permit outlet pressures within their full range. Pressure adjustment beyond this range is also possible because the knob is not a limiting device. This is a common characteristic of most industrial regulators, and limiting devices may be obtained only by special design. For best performance, regulated pressure should always be set by increasing the pressure up to the desired setting.

Tel: +45 63 12 83 00 | Email: ps@hymatik.com | www.hymatik.com | Hvidkaervej 27a, DK-5250 Odense SV, Denmark

R34 Regulators – Miniature

- Diaphragm operated for fast response
- Large diaphragm to valve area ratio for precise regulation and high flow capacity
- Balanced valve design for precise regulation
- Available in 2 or 4 port design
- Available with a manifold mount to minimize plumbing
- Suitable for low temperature applications
- Non-rising adjusting knob
- 1/8", 1/4" ports (NPT, BSPP)



Relieving



Non-Relieving



R344-02C



R342-0MC

Port Size	Description	Part Number Without Gauge	With Gauge
1/8"	Relieving, 0 to 30 psig	**R344-01A**	**R344-01AG**
1/8"	Relieving, 0 to 60 psig	**R344-01B**	**R344-01BG**
1/8"	Relieving, 0 to 125 psig	**R344-01C**	**R344-01CG**
1/4"	Relieving, 0 to 30 psig	**R344-02A**	**R344-02AG**
1/4"	Relieving, 0 to 60 psig	**R344-02B**	**R344-02BG**
1/4"	Relieving, 0 to 125 psig	**R344-02C**	**R344-02CG**
Manifold	Relieving, 0 to 30 psig	**R342-0MA**	–
Manifold	Relieving, 0 to 60 psig	**R342-0MB**	–
Manifold	Relieving, 0 to 125 psig	**R342-0MC**	–

Operating information

Supply pressure (max):		300 psig (0 to 20.7 bar)
Operating temperature:		-40°F to 150°F (-40°C to 65.5°C)
Flow capacity†:		
High flow	1/8"	17 scfm (8.0 dm³/s, ANR)
	1/4"	19 scfm (8.9 dm³/s, ANR)
Gauge ports (2):		1/8 inch (no gauge port version available)
Weight:		0.25 lb (0.11 kg)

† scfm = Standard cubic feet per minute at 100 psig inlet, 90 psig no flow secondary setting and 10 psig pressure drop.

Ordering Information:

R34 | 4 | – | 02 | C | G | ☐ | ☐

Number of Ports

2 Ports	2
4 Ports	4*

* Not available with manifold mount.

Thread

NPT	–
BSPP	G

Port

1/8 inch	01
1/4 inch	02
Manifold Mount	0M

Pressure Range

0 to 30 psi	A
0 to 60 psi	B
0 to 125 psi	C

Options

Blank	No Option
G	Gauge
K	Non-Relieving Diaphragm
N	Unbalanced
P	Panel Mount Nut
X64	Fluorocarbon Elastomers

Options

Blank	No Options
L†	Preset Non-Adjustable
M†	Preset Adjustable

† Inlet pressure is 100 psig. For other pressures contact factory.

Preset

Blank	None
XXX*	Preset Pressure

* Available preset / pressure limited range, 10 to 90 psig in 5 psig increments. For higher pressures, contact factory. (Example: 065 = 65 psig)

☐ Most popular.

For inventory, lead times, and kit lookup, visit www.pdnplu.com

Parker Hannifin Corporation
Pneumatic Division
Richland, Michigan
www.parker.com/pneumatics

Tel: +45 63 12 83 00 | Email: ps@hymatik.com | www.hymatik.com | Hvidkaervej 27a, DK-5250 Odense SV, Denmark

Material Specifications

Body	Aluminum
Bonnet	Acetal
Diaphragm & seals	Nitrile
Valve assembly	Brass
Springs	Steel
Panel Nut	Acetal

Repair and Service Kits

Diaphragm assembly, non-relieving	**GRP-96-726**
Diaphragm assembly, relieving	**GRP-96-725**
0 to 30 psig (0 to 2.1 bar), spring, regulating	**GRP-95-111**
0 to 60 psig (0 to 4.1 bar) spring, regulating	**GRP-96-718**
0 to 125 psig (0 to 8.6 bar) spring, regulating	**GRP-96-717**
Panel mount nut, aluminum	**R05X51-A**
Panel mount nut, plastic	**R05X51-P**
Mounting bracket kit (includes panel mount nut)	**SA161X57**
1-1/2" Dial Face, 1/8 NPT, CBM, 0 to 60 psig (0 to 4.1 bar), gauge	**K4515N18060**
1-1/2" Dial Face, 1/8 NPT, CBM, 0 to 160 psig (0 to 11.0 bar), gauge	**K4515N18160**
Tamperproof knob kit	**P31KB00AT**

R342 / R344

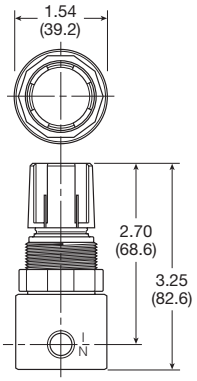

R342-0MC

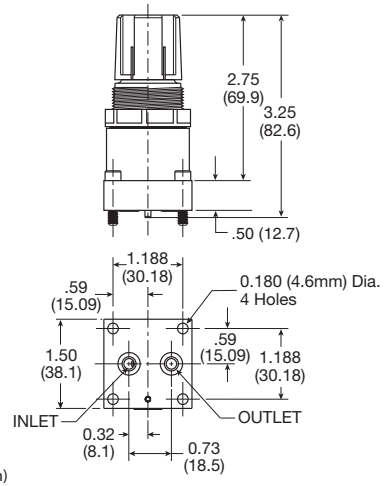

Inches (mm)

Flow Charts

1/8" Manifold Mount

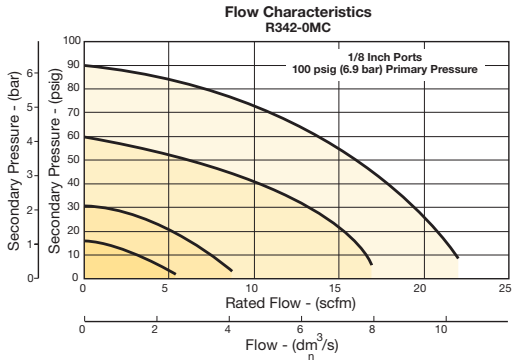

1/8" Port

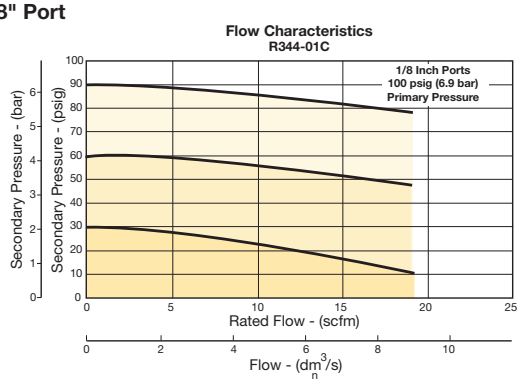

1/4" Port

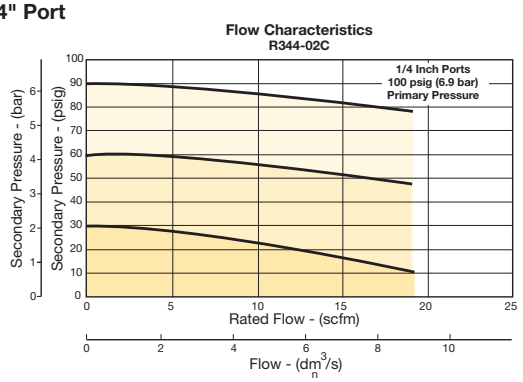

⚠ WARNING

Product rupture can cause serious injury.
Do not connect regulator to bottled gas.
Do not exceed Maximum primary pressure rating.

CAUTION:

REGULATOR PRESSURE ADJUSTMENT – The working range of knob adjustment is designed to permit outlet pressures within their full range. Pressure adjustment beyond this range is also possible because the knob is not a limiting device. This is a common characteristic of most industrial regulators, and limiting devices may be obtained only by special design. For best performance, regulated pressure should always be set by increasing the pressure up to the desired setting.

For inventory, lead times, and kit lookup, visit www.pdnplu.com

Parker Hannifin Corporation
Pneumatic Division
Richland, Michigan
www.parker.com/pneumatics

R25 Regulators – Miniature

- Lightweight plastic body
- Unbalanced poppet standard
- Non-rising, push-to-lock adjusting knob
- Compact, 3.10 Inch (79 mm) high by 1.60 Inch (41 mm) wide
- Lightweight
- Diaphragm operated
- 1/8", 1/4" ports (NPT)



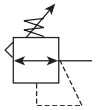

Port Size	Description	Part Number
1/8"	Relieving, 0-125 Reduced Pressure, without Gauge	**R25-01C**
1/4"	Relieving, 0-125 Reduced Pressure, without Gauge	**R25-02C**

NOTE: 1.250 Dia. (31.8 mm) hole required for panel mounting.

Operating information

Supply pressure (max):	Inlet 150 psig (10.0 bar)
Operating temperature:	40°F to 125°F (4°C to 52°C)
Gauge ports (2):	1/8 inch (can be used for full flow)
Weight:	0.25 lb (0.11 kg)

Ordering Information:

R25 – 02 C ☐

Type	
Buna Elastomers	R25

Port Size	
1/8 inch	01
1/4 inch	02

Pressure Range	
A	0 to 25 psig (0 to 2 bar)
B	0 to 60 psig (0 to 4 bar)
C	0 to 125 psig (0 to 125 (0 to 8 bar)

Relief	
Blank	Relieving
P	Panel Mount Nut

☐ Most popular.

Parker Hannifin Corporation
Pneumatic Division
Richland, Michigan
www.parker.com/pneumatics

Tel: +45 63 12 83 00 | Email: ps@hymatik.com | www.hymatik.com | Hvidkaervej 27a, DK-5250 Odense SV, Denmark

Material Specifications

Adjusting screw	Steel
Body	Acetal
Bonnet and seat	Acetal
Diaphragm	Buna N
Seals	Buna N
Springs	Stainless steel
Valve poppet	Buna N

Repair and Service Kits

Panel mount nut, plastic	**R05X51-P**
Panel mount nut, aluminum	**R05X51-A**
Mounting bracket and nut	**SA161X57**
Relieving (Buna)	**RKR25Y**
Non-Relieving (Buna)	**RKR25KY**
0-25 psig spring	**SPR-375-1**
0-60 psig spring	**SPR-376**
0-125 psig spring	**SPR-377**

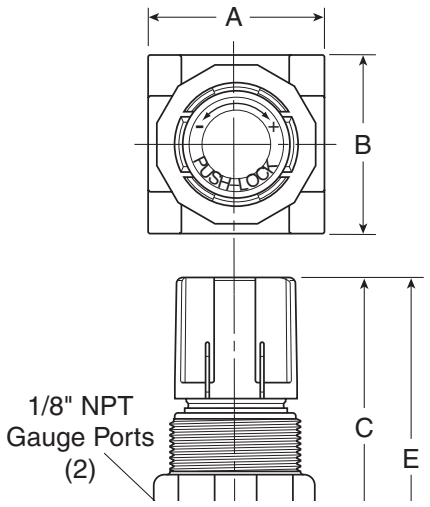

Flow Charts

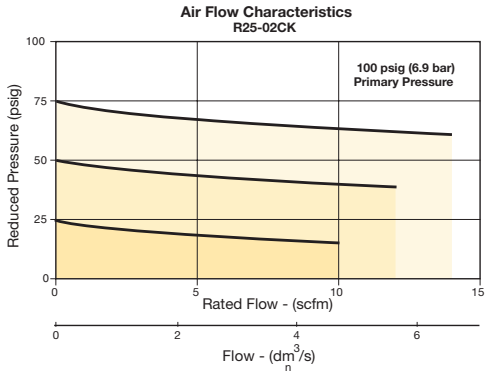

⚠ WARNING

Product rupture can cause serious injury.
Do not connect regulator to bottled gas.
Do not exceed Maximum primary pressure rating.

CAUTION:

REGULATOR PRESSURE ADJUSTMENT – The working range of knob adjustment is designed to permit outlet pressures within their full range. Pressure adjustment beyond this range is also possible because the knob is not a limiting device. This is a common characteristic of most industrial regulators, and limiting devices may be obtained only by special design. For best performance, regulated pressure should always be set by increasing the pressure up to the desired setting.

Parker Hannifin Corporation
Pneumatic Division
Richland, Michigan
www.parker.com/pneumatics

Tel: +45 63 12 83 00 | Email: ps@hymatik.com | www.hymatik.com | Hvidkaervej 27a, DK-5250 Odense SV, Denmark

R45 Regulators – Miniature

- Lightweight plastic body
- Unbalanced poppet standard
- Non-rising, push-to-lock adjusting knob
- Compact, 3.43 inch (87.1 mm) high by 2.06 inch (52.3 mm) wide
- Lightweight
- Diaphragm operated
- 1/4", 3/8" ports (NPT, BSPP)

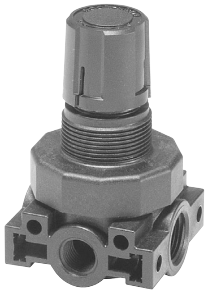

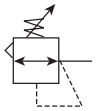

Port Size	Description	Part Number
1/4"	Relieving, 0-125 Reduced Pressure, without Gauge	**R45-02C**
3/8"	Relieving, 0-125 Reduced Pressure, without Gauge	**R45-03C**

NOTE: 1.250 Dia. (31.8 mm) hole required for panel mounting.

Operating information

Supply pressure (max):	Inlet 150 psig (10.0 bar)
Operating temperature:	40°F to 125°F (4°C to 52°C)
Gauge ports (2):	1/4 inch (can be used for full flow)
Weight:	0.38 lb (0.17 kg)

Ordering Information:

R45 – 02 C ☐

Type	
Buna Elastomers	R45

Port Size	
1/4 inch	02
3/8 inch	03

Pressure Range	
A	0 to 25 psig (0 to 2 bar)
B	0 to 60 psig (0 to 4 bar)
C	0 to 125 psig (0 to 8 bar)

Relief	
Blank	Relieving
P	Panel Mount Nut

☐ Most popular.

Tel: +45 63 12 83 00 | Email: ps@hymatik.com | www.hymatik.com | Hvidkaervej 27a, DK-5250 Odense SV, Denmark

Material Specifications

Adjusting screw	Steel
Body	Acetal
Bonnet and seat	Acetal
Diaphragm	Buna N
Seals	Buna N
Springs	Stainless steel
Valve Poppet	Buna N

Repair and Service Kits

Panel mount nut, plastic	**R05X51**
Panel mount nut, aluminum	**R05X51-A**
Mounting bracket and nut	**SA161X57**
Relieving	**RKR45Y**
Non-Relieving	**RKR45KY**
0-25 psig spring	**SPR-46**
0-60 psig spring	**SPR-47**
0-125 psig spring	**SPR-48**

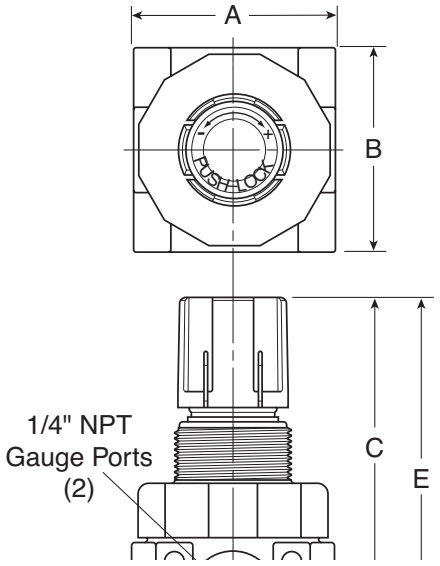

Flow Charts

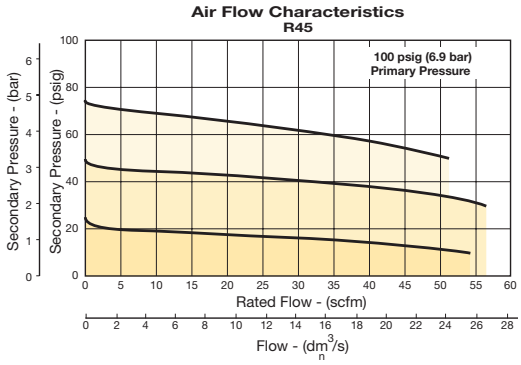

⚠ WARNING

Product rupture can cause serious injury.
Do not connect regulator to bottled gas.
Do not exceed Maximum primary pressure rating.

CAUTION:

REGULATOR PRESSURE ADJUSTMENT – The working range of knob adjustment is designed to permit outlet pressures within their full range. Pressure adjustment beyond this range is also possible because the knob is not a limiting device. This is a common characteristic of most industrial regulators, and limiting devices may be obtained only by special design. For best performance, regulated pressure should always be set by increasing the pressure up to the desired setting.

Tel: +45 63 12 83 00 | Email: ps@hymatik.com | www.hymatik.com | Hvidkaervej 27a, DK-5250 Odense SV, Denmark

15R Regulators – Economy

- Solid control piston with resilient seat for service-free operation
- Non-rising "locking" adjusting knob
- Compact, 3.30 inch (84 mm) high by 2.12 inch (54 mm) wide
- Easily serviced
- 1/4", 3/8" ports (NPT)

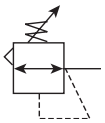



Port Size	Description	Part Number
1/4"	Without Gauge	**15R113FB**
1/4"	With Gauge	**15R118FB**
3/8"	Without Gauge	**15R213FB**
3/8"	With Gauge	**15R218FB**

NOTE: 1.218 Dia. (31 mm) hole required for panel mounting.

Operating information

Supply pressure (max):		0 to 250 psig (0 to 17.2 bar)
Secondary pressure ranges		
Standard		2 to 125 psig (0 to 8.6 bar)
Medium		1 to 60 psig (0 to 4.1 bar)
Medium		1 to 30 psig (0 to 1.7 bar)
Low		1 to 15 psig (0 to 1 bar)
Operating temperature:		32°F to 125°F (0°C to 52°C)
Low temperature		-4°F to 125°F (-20°C to 52°C)
Flow capacity†:		
High flow	1/4"	21 scfm (9.9 dm^3/s, ANR)
	3/8"	28 scfm (13.2 dm^3/s, ANR)
Gauge ports (2):		1/4 inch (can be used at full flow)
Weight:		0.5 lb (0.23 kg)

† scfm = Standard cubic feet per minute at 100 psig inlet, 90 psig no flow secondary setting and 10 psig pressure drop.

Ordering Information:

15R | **1** | **13** | **F** | **B**

Port Size	
1/4 inch	1
3/8 inch	2

Pressure Range	
Without Gauge	
15 psig	12
30 psig	10
60 psig	11
125 psig	13
With Gauge	
15 psig	17
30 psig	15
60 psig	16
125 psig	18

Relief	
F	Relieving
G	Non-Relieving
H	Low Temp Relieving
J	Low Temp Non-Relieving

Engineering Level	
B	Current

☐ Most popular.

Material Specifications

Adjusting nut	Brass
Adjusting stem & spring	Steel
Body	Zinc
Bonnet, seat, piston & valve poppet	Plastic
Seals	Nitrile

Repair and Service Kits

Body Service Kit – Unbalanced	**PS424BP**
Bonnet Assembly Kit	**L01369**
30 psig, 1/8" NPT (0 to 2.1 bar) gauge	**K4515N18030**
60 psig, 1/8" NPT (0 to 4.1 bar) gauge	**K4515N18060**
160 psig, 1/8" NPT (0 to 11.0 bar) gauge	**K4515N18160**
60 psig, 1/4" NPT (0 to 4.1 bar) gauge	**K4520N14060**
160 psig, 1/4" NPT (0 to 11.0 bar) gauge	**K4520N14160**
Mounting bracket kit* (Includes panel mount nut)	**PS417BP**
Panel mount nuts*, plastic	**P78652**
Panel mount nuts*, metal	**P01531**
Poppet / piston kit, unbalanced, non-relieving	**PS428P**
Poppet / piston kit, unbalanced, relieving	**PS426P**
Seal, unbalanced	**PS454B**
1-15 psig spring (yellow)	**P01176**
1-30 psig spring (black)	**P01175**
1-60 psig spring (white)	**P01174**
2-125 psig spring (gold)	**P01173**

* Tighten panel mount nut 2.8 to 3.4 Nm (25 to 30 in-lbs) of torque.

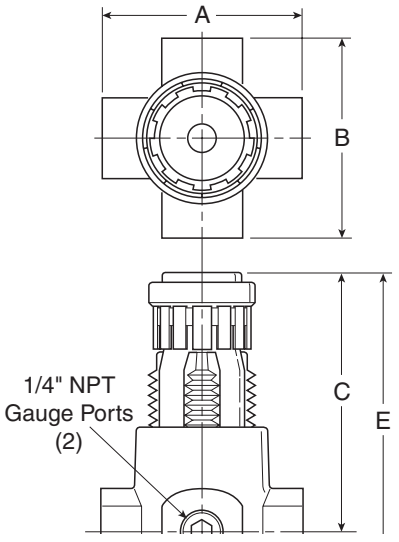

Flow Charts

1/4" Regulator

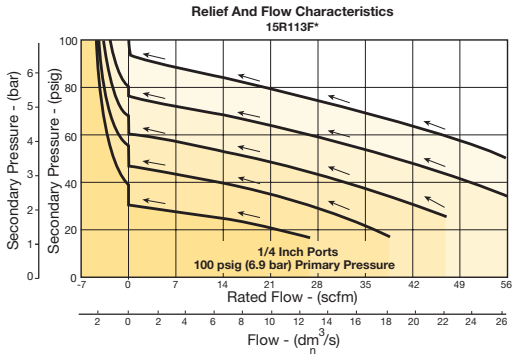

3/8" Regulator

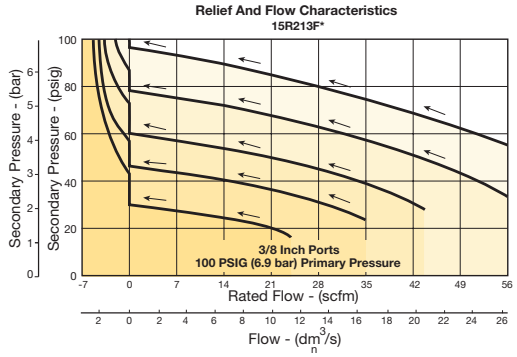

⚠ WARNING

Product rupture can cause serious injury.
Do not connect regulator to bottled gas.
Do not exceed Maximum primary pressure rating.

CAUTION:

REGULATOR PRESSURE ADJUSTMENT – The working range of knob adjustment is designed to permit outlet pressures within their full range. Pressure adjustment beyond this range is also possible because the knob is not a limiting device. This is a common characteristic of most industrial regulators, and limiting devices may be obtained only by special design. For best performance, regulated pressure should always be set by increasing the pressure up to the desired setting.

Parker Hannifin Corporation
Pneumatic Division
Richland, Michigan
www.parker.com/pneumatics

27R Regulators – Semi-Precision

- Fine adjustment sensitivity
- Good repeatability and minimal pressure drop
- High flow capacity
- Two 1/4" gauge ports
- Brass Poppet for long life
- Modular with 05 Series FRL
- Non-rising, removable knob
- Multiple porting options
- 1/4", 3/8" ports (NPT, BSPP, BSPT)



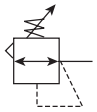

Operating information

Bleed rate:	0.033 scfm (0.016 dm^3/s, ANR)
Effect of supply variation:	0.5 psig (0.04 bar) for 25 psig (1.7 bar) change P^1
Relief capacity:	0.5 scfm (0.24 dm^3/s, ANR) @ 5 psig (0.4 bar) increase P^2
Flow capacity†:	28 scfm (13.2 dm^3/s, ANR) @ 100 psig (6.9 bar) P^1 and 20 psig (1.4 bar) P^2
Inlet pressure (max):	250 psig (17.2 bar)
Temperature rating:	32°F to 175°F (0°C to 80°C)
Relief flow:	5.0 scfm (2.4 dm^3/s, ANR)
Repeatability:	± .5 psig (±0.034 bar)
Response:	510 ms The valve will open to full flow and fill a volume of 100 in^3
Gauge ports (2):	1/4 inch
Weight:	1.0 lb (0.45 kg)

† scfm = Standard cubic feet per minute at 150 psig inlet, 90 psig no flow secondary setting and 5 psig pressure drop.

Ordering Information:

Port Size	Description	Part Number
1/4"	1-15 psi w/out Gauge, Relieving	**27R112AD**
1/4"	0-60 psi w/out Gauge, Relieving	**27R114AD**
1/4"	2-125 psi w/out Gauge, Relieving	**27R113AD**

NOTE: 1.53 Dia. (39 mm) hole required for panel mounting. Max panel thickness 1/4"

☐ Most popular.

For inventory, lead times, and kit lookup, visit www.pdnplu.com

Parker Hannifin Corporation
Pneumatic Division
Richland, Michigan
www.parker.com/pneumatics

Tel: +45 63 12 83 00 | Email: ps@hymatik.com | www.hymatik.com | Hvidkaervej 27a, DK-5250 Odense SV, Denmark

Material Specifications

Poppet	Brass
Bonnet	Plastic
Body	Zinc
Collar, knob	Plastic
Diaphragm	Nitrile
Bottom Cap	Plastic
Seals	Nitrile
Springs – poppet & control	Steel

Repair and Service Kits

Bonnet assembly kit	**PS910P**
Control knob	**P0442001**
1-1/2" dial face 30 psig (0 to 2.1 bar), gauge	**K4515N14030**
1-1/2" dial face 60 psig (0 to 4.1 bar), gauge	**K4515N14060**
1-1/2" dial face 160 psig (0 to 11.0 bar), gauge	**K4515N14160**
1-1/2" dial face 300 psig (0 to 20.7 bar), gauge	**K4515N14300**
2" dial face 60 psig (0 to 4.1 bar), gauge	**K4520N14060**
2" dial face 160 psig (0 to 11.0 bar), gauge	**K4520N14160**
2" dial face 300 psig (0 to 20.7 bar), gauge	**K4520N14300**
Mounting bracket kit	**PS963P**
Panel mount nut, metal	**PS964P**
Service kit	**PS907P**
1-30 psig spring	**P04427**
1-15 psig spring	**P04428**
0-60 psig spring	**P04426**
2-125 psig spring	**P04425**

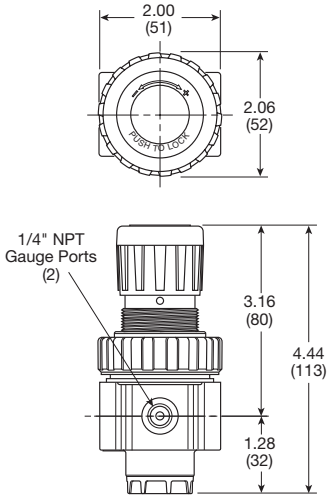

Flow Charts

1/4" Regulator 30 psig spring

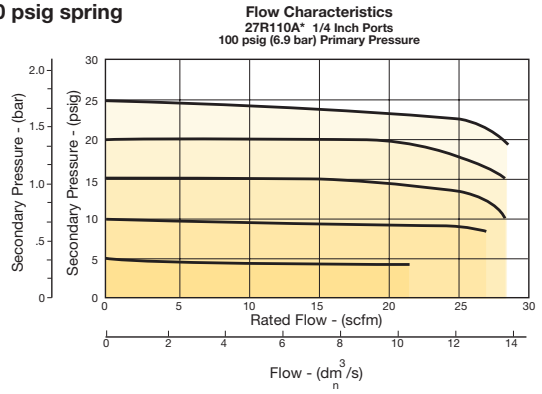

1/4" Regulator 60 psig spring

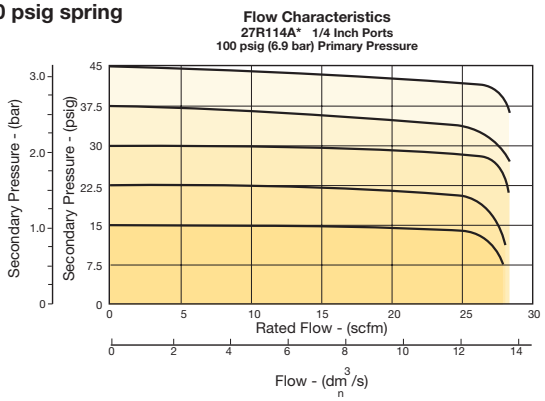

1/4" Regulator 125 psig spring

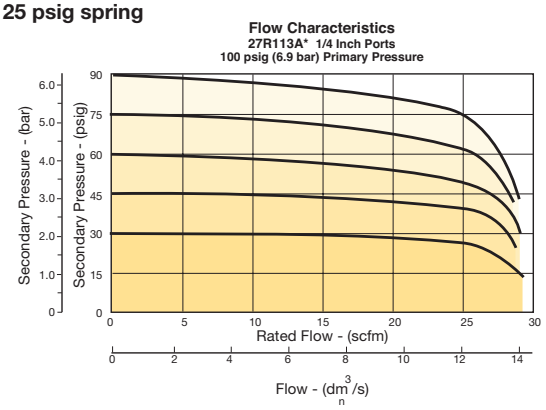

⚠ WARNING

Product rupture can cause serious injury.
Do not connect regulator to bottled gas.
Do not exceed Maximum primary pressure rating.

CAUTION:

REGULATOR PRESSURE ADJUSTMENT – The working range of knob adjustment is designed to permit outlet pressures within their full range. Pressure adjustment beyond this range is also possible because the knob is not a limiting device. This is a common characteristic of most industrial regulators, and limiting devices may be obtained only by special design. For best performance, regulated pressure should always be set by increasing the pressure up to the desired setting.

For inventory, lead times, and kit lookup, visit www.pdnplu.com

Parker Hannifin Corporation
Pneumatic Division
Richland, Michigan
www.parker.com/pneumatics

P31 Regulators – Mini

- Integral 1/4" ports (NPT, BSPP & BSPT)
- Robust but lightweight aluminum construction
- Secondary pressure ranges
- Secondary aspiration plus balanced poppet provides quick response and accurate pressure regulation.
- Relieving & non-relieving types
- Non-rising knob



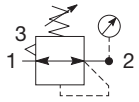

Self relieving regulator with gauge

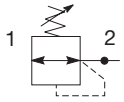

Non-relieving regulator

Operating information

Flow capacity*:	1/4	68 scfm (32 dm³/s, ANR)
Operating temperature†:		-4°F to 150°F (-20°C to 65.5°C)
Supply pressure (max):		300 psig (20 bar)
Adjusting range pressure:		30 psig (0-2 bar) 60 psig (0-4 bar) 125 psig (0-8 bar) 232 psig (0-16 bar)
Gauge port (2 each)**		1/8 BSPP, BSPT, NPT
Weight:		0.37 lb (0.17 kg)

* Inlet pressure 145 psig (10 bar). Secondary pressure 91.3 psig (6.3 bar).
** Non-gauge option only.
† Units with square gauges: 5°F to 150°F (-15°C to 65.5°C)

Port Size	Description (Relieving)	Gauge	Part Number
1/4"	125 psig (8 bar)	None	**P31RB92BNNP**
1/4"	125 psig (8 bar)	Square	**P31RB92BN5P**

Ordering Information:

P31RB 9 2 B N 5 P

Basic Series

Global Modular Mini Regulator	P31RB

Thread type

BSPP	1
BSPT	2
NPT	9

Port size

1/4	2

Relief

Relieving	B
Non-Relieving	N
Reverse Flow-Relieving	R

Adjustment

N	Non-Rising Knob

Adjustment Range

With Square Gauge		With Round Gauge	
psig	bar		
1 = 30*	V = 2*	Z	30 psig; 2 bar; 0.2 MPa
3 = 60	S = 4	M	60 psig; 4 bar; 0.4 MPa
5 = 125	T = 8	G	125 psig; 8 bar; 0.8 MPa
		J	232 psig; 16 bar; 1.6 MPa
		Without Gauge	
		Y	30 psig; 2 bar; 0.2 MPa
		L	60 psig; 4 bar; 0.4 MPa
		N	125 psig; 8 bar; 0.8 MPa
		H	232 psig; 16 bar; 1.6 MPa

* Regulator comes with gauge respective to the adjustment range selected.

Mounting

P	Plastic Panel Mount Nut

☐ Most popular.

For inventory, lead times, and kit lookup, visit www.pdnplu.com

Parker Hannifin Corporation
Pneumatic Division
Richland, Michigan
www.parker.com/pneumatics

Tel: +45 63 12 83 00 | Email: ps@hymatik.com | www.hymatik.com | Hvidkaervej 27a, DK-5250 Odense SV, Denmark

Material Specifications

Body	Aluminum
Adjustment knob	Acetal
Bonnet	PBT
Diaphragm assembly	Brass / Nitrile
Valve assembly	Brass / Nitrile
Springs	Steel
Seals	Nitrile
Panel nut	Acetal

Repair and Service Kits

Diaphagm repair kit - relieving	**P31KB00RB**
Diaphagm repair kit - non-relieving	**P31KB00RC**
Panel mount nut - aluminum	**P31KA00MM**
Panel mount nut - plastic	**P31KA00MP**
Angle bracket (attaches via panel nut)	**P31KB00MR**
C-bracket (fits to body)	**P31KA00MW**
T-bracket with body connector	**P31KA00MT**
Body connector	**P31KA00CB**

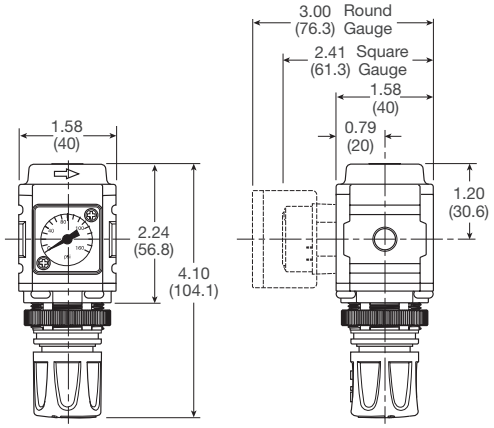

Inches (mm)

NOTE: 1.20 in. (30mm) hole required for panel nut mounting.

Flow Charts

1/4 Regulator

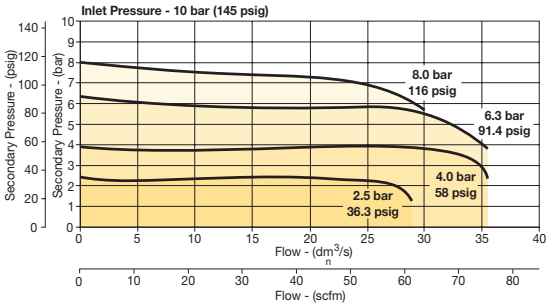

⚠ WARNING

Product rupture can cause serious injury.
Do not connect regulator to bottled gas.
Do not exceed Maximum primary pressure rating.

CAUTION:

REGULATOR PRESSURE ADJUSTMENT – The working range of knob adjustment is designed to permit outlet pressures within their full range. Pressure adjustment beyond this range is also possible because the knob is not a limiting device. This is a common characteristic of most industrial regulators, and limiting devices may be obtained only by special design. For best performance, regulated pressure should always be set by increasing the pressure up to the desired setting.

Gauges

Square flush mount gauge	0-4 bar	**K4511SCR04B**
	0-11 bar	**K4511SCR11B**
	0-60 psig	**K4511SCR060**
	0-160 psig	**K4511SCR160**
Square with adapter kit	0-4 bar	**P6G-PR10040**
	0-11 bar	**P6G-PR10110**
	0-60 psig	**P6G-PR90060**
	0-160 psig	**P6G-PR90160**
1.00" Round 1/8" center back mount	0-60 psig / 0-4 bar	**K4510N18060**
	0-160 psig / 0-11 bar	**K4510N18160**
40mm Round 1/8" center back mount (Not for use with common port regulators)	0-30 psig / 0-2 bar	**K4515N18030**
	0-60 psig / 0-4 bar	**K4515N18060**
	0-160 psig / 0-11 bar	**K4515N18160**

For best performance, regulated pressure should always be set by increasing the pressure up to the desired setting.

P31 Common P1 Regulators – Mini

- Manifold style regulator with line pressure on both sides
- Pressure output is at front or rear
- Inlet port 1/4" (NPT, BSPP & BSPT)
- Working port 1/8"
- Robust construction
- Secondary pressure ranges
- Secondary aspiration plus balanced poppet provides quick response and accurate pressure regulation
- Relieving & non-relieving types
- Non-rising knob

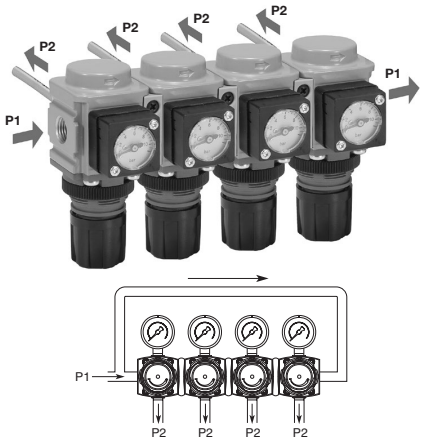

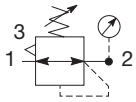

Self relieving regulator with gauge

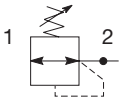

Non-relieving regulator

Port Size	Description (Relieving)	Gauge	Part Number
1/4"	125 psig (8 bar)	None	**P31HB92BNNP**
1/4"	125 psig (8 bar)	Square	**P31HB92BN5P**

Operating information

Flow capacity*: 1/4	42 scfm (20 dm³/s, ANR)
Operating temperature:	-4°F to 150°F (-20°C to 65.5°C)
Supply pressure (max):	300 psig (20 bar)
Adjusting range pressure:	30 psig (0-2 bar) 60 psig (0-4 bar) 125 psig (0-8 bar) 232 psig (0-16 bar)
P1 port size (inlet/outlet)	1/4 NPT, BSPP, BSPT
P2 regulated ports (2 ea.)	1/8 NPT, BSPP, BSPT
Weight:	0.66 lb (0.30 kg)

* Inlet pressure 145 psig (10 bar). Secondary pressure 91.3 psig (6.3 bar).

Ordering Information:

P31HB 9 2 B N 5 P

Basic Series	
Global Modular Mini Common Regulator	P31HB

Thread type	
BSPP	1
BSPT	2
NPT	9

Port size †	
1/4	2

† Working port 1/8".

Relief	
Relieving	B
Non-Relieving	N
Reverse Flow-Relieving	R

Adjustment	
N	Non-Rising Knob

Mounting	
P	Plastic Panel Mount Nut

Adjustment Range			
With Square Gauge			With Round Gauge
psig		bar	
1 = 30*		V = 2*	Z 30 psig; 2 bar; 0.2 MPa
3 = 60		S = 4	M 60 psig; 4 bar; 0.4 MPa
5 = 125		T = 8	G 125 psig; 8 bar; 0.8 MPa
			J 232 psig; 16 bar; 1.6 MPa
			Without Gauge
			Y 30 psig; 2 bar; 0.2 MPa
			L 60 psig; 4 bar; 0.4 MPa
			N 125 psig; 8 bar; 0.8 MPa
			H 232 psig; 16 bar; 1.6 MPa

* Regulator comes with gauge respective to the adjustment range selected.

☐ Most popular.

For inventory, lead times, and kit lookup, visit www.pdnplu.com

Parker Hannifin Corporation
Pneumatic Division
Richland, Michigan
www.parker.com/pneumatics

Tel: +45 63 12 83 00 | Email: ps@hymatik.com | www.hymatik.com | Hvidkaervej 27a, DK-5250 Odense SV, Denmark

Materials of Construction

Body	Aluminum
Adjustment knob	Acetal
Bonnet	Glass-filled PBT
Diaphragm assembly	Brass / Nitrile
Valve assembly	Brass / Nitrile

Repair and Service Kits

Diaphagm repair kit - relieving	**P31KB00RB**
Diaphagm repair kit - non-relieving	**P31KB00RC**
Panel mount nut - aluminum	**P31KA00MM**
Panel mount nut - plastic	**P31KA00MP**
Angle bracket (attaches via panel nut)	**P31KB00MR**
T-bracket with body connector	**P31KA00MT**
Body connector	**P31KA00CB**

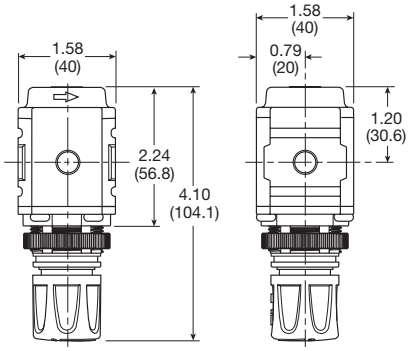

Inches (mm)

NOTE: 1.20 in. (30mm) hole required for panel nut mounting.

Flow Charts

1/4 Common Regulator

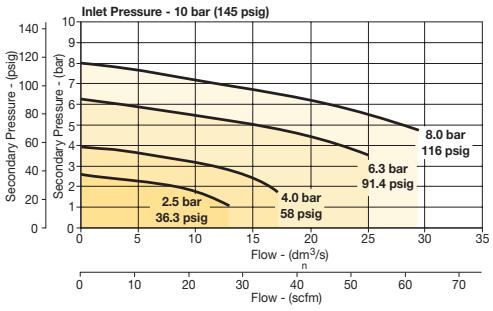

⚠ WARNING

Product rupture can cause serious injury.
Do not connect regulator to bottled gas.
Do not exceed Maximum primary pressure rating.

CAUTION:

REGULATOR PRESSURE ADJUSTMENT – The working range of knob adjustment is designed to permit outlet pressures within their full range. Pressure adjustment beyond this range is also possible because the knob is not a limiting device. This is a common characteristic of most industrial regulators, and limiting devices may be obtained only by special design. For best performance, regulated pressure should always be set by increasing the pressure up to the desired setting.

Gauges

Square with adapter kit	0-4 bar	**P6G-PR10040**
	0-11 bar	**P6G-PR10110**
	0-60 psig	**P6G-PR90060**
	0-160 psig	**P6G-PR90160**
1.00" round 1/8" center back mount	0-60 psig / 0-4 bar	**K4510N18060**
	0-160 psig / 0-11 bar	**K4510N18160**

For best performance, regulated pressure should always be set by increasing the pressure up to the desired setting.

Tel: +45 63 12 83 00 | Email: ps@hymatik.com | www.hymatik.com | Hvidkaervej 27a, DK-5250 Odense SV, Denmark

05R Regulators – Economy

- Secondary aspiration plus balanced poppet provides quick response and accurate pressure regulation.
- Rolling diaphragm for extended life.
- Removable non-rising knob for panel mounting and tamper resistance.
- Easily serviced.
- Reverse Flow.
- 1/4", 3/8" ports (NPT, BSPP)



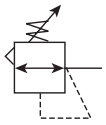

Port Size	Description	Part Number
1/4"	Without Gauge	**05R113A***
1/4"	With 160 Psi Gauge	**05R118A***
3/8"	Without Gauge	**05R213A***
3/8"	With 160 Psi Gauge	**05R218A***

NOTE: 1.53 Dia. (39 mm) hole required for panel mounting.

Operating information

Supply pressure (max):		0 to 300 psig (0 to 20.7 bar)
For secondary pressure ranges see charts next page.		
Operating temperature:		32°F to 175°F (0°C to 80°C)
Low temperature		-4°F to 125°F (-20°C to 52°C)
Flow capacity†:		
High flow	1/4"	30 scfm (14.2 dm³/s, ANR)
	3/8"	40 scfm (18.9 dm³/s, ANR)
Gauge ports (2):		1/4 inch
Weight:		1.1 lb (0.49 kg)

† scfm = Standard cubic feet per minute at 100 psig inlet, 90 psig no flow secondary setting and 10 psig pressure drop.

Ordering Information:

05R **1** **13** **A** **D** **[ ]**

Port Size	
1/4 inch	1
3/8 inch	2

Pressure Range	
Without Gauge	
60 psig	11
125 psig	13
200 psig	14
With Gauge*	
60 psig	16
125 psig	18
200 psig	19

* Includes 1-1/2" dial face gauge.

Relief	
A	Relieving

Engineering Level	
D	Current

Port Type	
Blank	NPT

☐ Most popular.

Tel: +45 63 12 83 00 | Email: ps@hymatik.com | www.hymatik.com | Hvidkaervej 27a, DK-5250 Odense SV, Denmark

Material Specifications

Adjusting stem	Brass
Bonnet	Plastic
Body	Zinc
Collar, Knob	Plastic
Diaphragm	Nitrile
Poppet & cap	Plastic
Seals	Nitrile
Springs – poppet & control	Steel

Repair and Service Kits

Bonnet assembly kit **PS915P**	
Control knob	**P04420**
1-1/2" dial face 30 psig (0 to 2.1 bar), gauge	**K4515N14030**
1-1/2" dial face 60 psig (0 to 4.1 bar), gauge	**K4515N14060**
1-1/2" dial face 160 psig (0 to 11.0 bar), gauge	**K4515N14160**
1-1/2" dial face 300 psig (0 to 20.7 bar), gauge	**K4515N14300**
2" dial face 60 psig (0 to 4.1 bar), gauge	**K4520N14060**
2" dial face 160 psig (0 to 11.0 bar), gauge	**K4520N14160**
2" dial face 300 psig (0 to 20.7 bar), gauge	**K4520N14300**
Mounting bracket kit	**PS963P**
Panel mount nut – metal	**PS964P**
1-30 psig spring	**P04427**
1-60 psig spring	**P04426**
2-125 psig spring	**P04425**
2-200 psig spring	**P02934**
Relieving service kit	**PS908P**

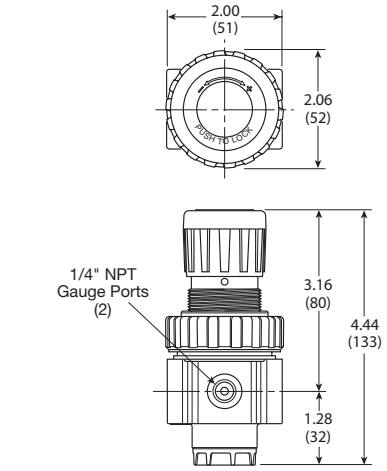

Inches (mm)

Flow Charts

1/4" Regulator

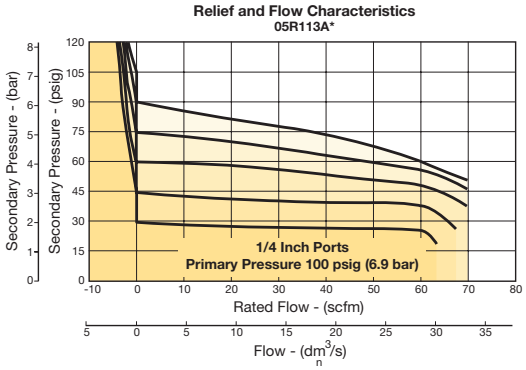

3/8" Regulator

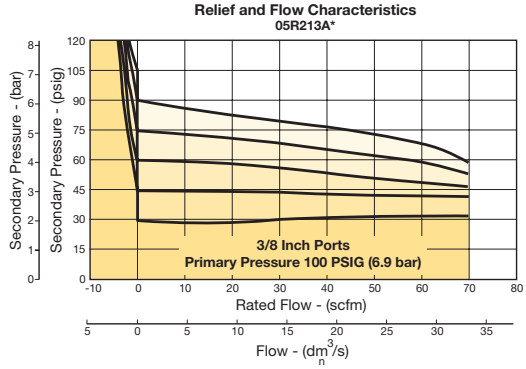

⚠ WARNING

Product rupture can cause serious injury.
Do not connect regulator to bottled gas.
Do not exceed Maximum primary pressure rating.

CAUTION:

REGULATOR PRESSURE ADJUSTMENT – The working range of knob adjustment is designed to permit outlet pressures within their full range. Pressure adjustment beyond this range is also possible because the knob is not a limiting device. This is a common characteristic of most industrial regulators, and limiting devices may be obtained only by special design. For best performance, regulated pressure should always be set by increasing the pressure up to the desired setting.

06R Regulators – Compact

- Secondary aspiration plus balanced poppet provides quick response and accurate pressure regulation
- Rolling diaphragm for extended life
- Two high flow 1/4" gauge ports can be used as additional outlets
- Easily serviced
- Removable non-rising knob for panel mounting and tamper resistance
- 1/4", 3/8", 1/2" ports (NPT, BSPP)



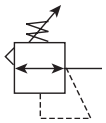

Port Size	Description	Part Number
1/4"	Without Gauge	**06R113AC**
1/4"	With 160 Psi Gauge	**06R118AC**
3/8"	Without Gauge	**06R213AC**
3/8"	With 160 Psi Gauge	**06R218AC**
1/2"	Without Gauge	**06R313AC**
1/2"	With 160 Psi Gauge	**06R318AC**

NOTE: 2.0 Dia. (51 mm) hole required for panel mounting.

Operating information

Supply pressure (max):		250 psig (17.2 bar)
Secondary pressure ranges:		
Standard		2 to 125 psig (0 to 8.6 bar)
Low		1 to 60 psig (0 to 4.1 bar)
High		5 to 250 psig (0.4 to 17.2 bar)
Operating temperature:		32°F to 175°F (0°C to 80°C)
Low temperature		-4°F to 125°F (-20°C to 52°C)
Flow capacity†:		
High flow	1/4"	53 scfm (25 dm³/s, ANR)
	3/8"	60 scfm (28.3 dm³/s, ANR)
	1/2"	75 scfm (35.4 dm³/s, ANR)
Gauge ports (2):		1/4 inch (can be used as additional full flow 1/4 inch outlet ports)
Weight:		1.6 lb (0.7 kg)

† scfm = Standard cubic feet per minute at 100 psig inlet, 90 psig no flow secondary setting and 10 psig pressure drop.

Ordering Information:

06R | **1** | **13** | **A** | **C** | ☐ | ☐ | ☐

Port Size	
1/4 inch	1
3/8 inch	2
1/2 inch	3

Pressure Range	
Without Gauge	
60 psig	11
125 psig	13
250 psig	15
With Gauge*	
60 psig	16
125 psig	18
250 psig	21

* Includes 1-1/2" dial face gauge.

Relief	
Relieving	A
Non-Relieving	L

Spring Type by Preset / Limited Pressure:
For Preset / Limited Pressure 26 to 50 use 60 psi spring
For Preset / Limited Pressure 51 to 90 use 125 psi spring

Engineering Level	
Current	C

Port Type	
Blank	NPT
1*	BSPP

* 1/4 & 3/8 inch meet ISO 1179-1 Standard.

Options	
Blank	No Option
L†	Preset Non-Adjustable
P†	Preset Adjustable
R	Reverse Flow

† Inlet Pressure is 100 psig. For other pressures, contact factory.

Preset / Pressure Limited	
Blank	None
XXX*	Preset Pressure

* Available preset / pressure limited range, 10 to 90 psig in 5 psig increments. For higher pressures, contact factory.
(Example: 065 = 65 psig)

☐ Most popular.

For inventory, lead times, and kit lookup, visit www.pdnplu.com

Parker Hannifin Corporation
Pneumatic Division
Richland, Michigan
www.parker.com/pneumatics

Tel: +45 63 12 83 00 | Email: ps@hymatik.com | www.hymatik.com | Hvidkaervej 27a, DK-5250 Odense SV, Denmark

Material Specifications

Adjusting stem	Steel
Body	Zinc
Bonnet, piston stem, valve poppet & cap	Plastic
Collar, knob	Plastic
Diaphragm	Nitrile
Seals	Nitrile
Spring, poppet	Stainless
Spring, control	Steel

Repair and Service Kits

Bonnet assembly kit	**PS715P**
Control knob	**P04069B**
2" dial face 60 psig (0 to 4.1 bar), gauge	**K4520N14060**
2" dial face 160 psig (0 to 11.0 bar), gauge	**K4520N14160**
2" dial face 300 psig (0 to 20.7 bar), gauge	**K4520N14300**
1-3/4" digital round face 160 psig (0 to 11.0 bar) gauge	**K4517N14160D**
Mounting bracket kit (includes panel mount nut)	**PS707P**
Panel mount nut, plastic	**P04082**
Panel mount nut, metal	**P04079B**
Reverse flow service conversion kit, relieving	**PS708RP**
Relieving (includes poppet)	**PS708P**
Non-relieving (includes poppet)	**PS709P**
1-30 psig spring	**P01698**
1-60 psig spring	**P04062**
2-125 psig spring	**P04063**
5-250 psig spring	**P04064**
Tamperproof kit	**PS737P**

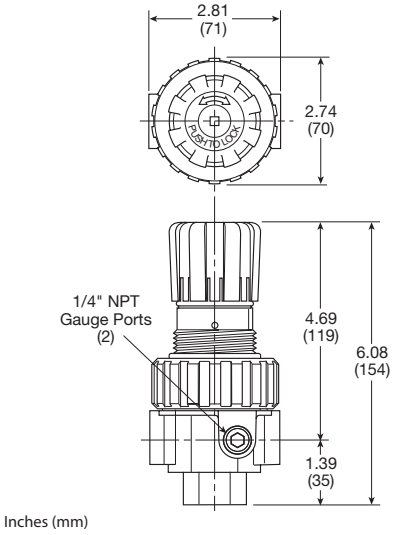

Inches (mm)

Flow Charts

06R 1/4" Regulator

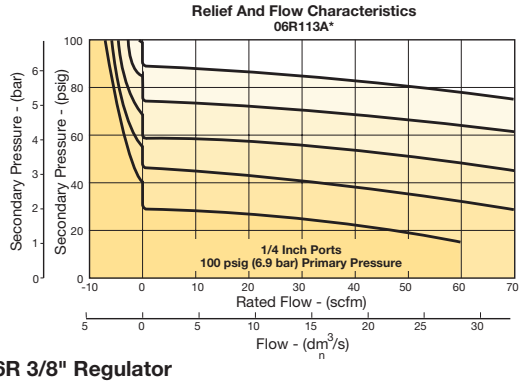

06R 3/8" Regulator

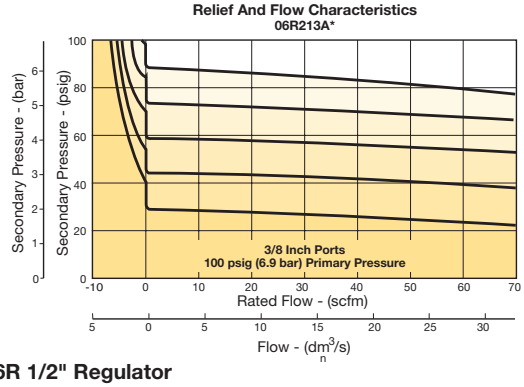

06R 1/2" Regulator

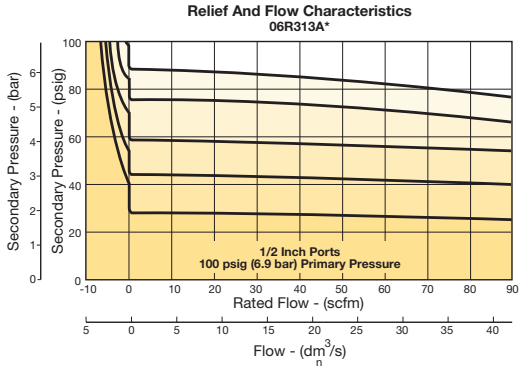

⚠ WARNING

Product rupture can cause serious injury.
Do not connect regulator to bottled gas.
Do not exceed Maximum primary pressure rating.

CAUTION:

REGULATOR PRESSURE ADJUSTMENT – The working range of knob adjustment is designed to permit outlet pressures within their full range. Pressure adjustment beyond this range is also possible because the knob is not a limiting device. This is a common characteristic of most industrial regulators, and limiting devices may be obtained only by special design. For best performance, regulated pressure should always be set by increasing the pressure up to the desired setting.

Tel: +45 63 12 83 00 | Email: ps@hymatik.com | www.hymatik.com | Hvidkaervej 27a, DK-5250 Odense SV, Denmark

P32 Regulators – Compact

- Integral 1/4", 3/8" or 1/2" ports (NPT, BSPP & BSPT)
- Robust but lightweight aluminum construction
- Secondary pressure ranges
- Secondary aspiration plus balanced poppet provides quick response and accurate pressure regulation
- Relieving & non-relieving types
- Non-rising knob
- Available T-handle



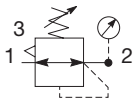

Self relieving regulator with gauge

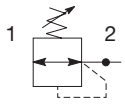

Non-relieving regulator

Port Size	Description (Relieving)	Gauge	Part Number
1/4"	125 psig (8 bar)	None	**P32RB92BNNP**
1/4"	125 psig (8 bar)	Round	**P32RB92BNGP**
3/8"	125 psig (8 bar)	None	**P32RB93BNNP**
3/8"	125 psig (8 bar)	Round	**P32RB93BNGP**
1/2"	125 psig (8 bar)	None	**P32RB94BNNP**
1/2"	125 psig (8 bar)	Round	**P32RB94BNGP**

Operating information

Flow capacity*:	
1/4	148 scfm (70 dm^3/s, ANR)
3/8, 1/2	165 scfm (78 dm^3/s, ANR)
Operating temperature:	-13°F to 150°F (-25°C to 65.5°C)
Supply pressure (max):	300 psig (20 bar)
Adjusting range pressure:	30 psig (0-2 bar) 60 psig (0-4 bar) 125 psig (0-8 bar) 250 psig (0-17 bar)
Gauge port (2 each)	1/4 NPT, BSPP, BSPT
Weight:	0.90 lb (0.41 kg)

* Inlet pressure 145 psig (10 bar). Secondary pressure 91.3 psig (6.3 bar).

Ordering Information:

P32RB 9 2 B N G P

Basic Series

Global Modular Compact Regulator	P32RB

Thread type

BSPP	1
BSPT	2
NPT	9

Port Size

1/4	2
3/8	3
1/2	4

Relief

Relieving	B
Non-Relieving	N

Adjustment

N	Non-Rising Knob
T	T-Handle

Mounting

P	Plastic Panel Mount Nut

Adjustment Range

With Square Gauge		With Round Gauge	
psig	bar		
1 = 30*	V = 2*	Z	30 psig; 2 bar; 0.2 MPa
3 = 60	S = 4	M	60 psig; 4 bar; 0.4 MPa
5 = 125	T = 8	G	125 psig; 8 bar; 0.8 MPa
		J	250 psig; 17 bar; 1.7 MPa
		Without Gauge	
		Y	30 psig; 2 bar; 0.2 MPa
		L	60 psig; 4 bar; 0.4 MPa
		N	125 psig; 8 bar; 0.8 MPa
		H	250 psig; 17 bar; 1.7 MPa

* Regulator comes with gauge respective to the adjustment range selected.

☐ Most popular.

Tel: +45 63 12 83 00 | Email: ps@hymatik.com | www.hymatik.com | Hvidkaervej 27a, DK-5250 Odense SV, Denmark

Material Specifications

Body	Aluminum
Adjustment knob	Acetal
Bonnet	Glass-filled nylon
Diaphragm assembly	Nitrile / Zinc
Valve assembly	Brass / Nitrile
Springs	Steel, stainless steel
Seals	Nitrile
Panel nut	Acetal

Repair and Service Kits

Diaphagm repair kit - relieving	**P32KB00RB**
Diaphagm repair kit - non-relieving	**P32KB00RC**
Panel mount nut - aluminum	**P32KA00MM**
Panel mount nut - plastic	**P32KA00MP**
Angle bracket (attaches via panel nut)	**P32KB00MR**
T-bracket with body connector	**P32KA00MT**
T-bracket	**P32KA00MB**
Body connector	**P32KA00CB**

⚠ WARNING

Product rupture can cause serious injury.
Do not connect regulator to bottled gas.
Do not exceed Maximum primary pressure rating.

CAUTION:

REGULATOR PRESSURE ADJUSTMENT – The working range of knob adjustment is designed to permit outlet pressures within their full range. Pressure adjustment beyond this range is also possible because the knob is not a limiting device. This is a common characteristic of most industrial regulators, and limiting devices may be obtained only by special design. For best performance, regulated pressure should always be set by increasing the pressure up to the desired setting.

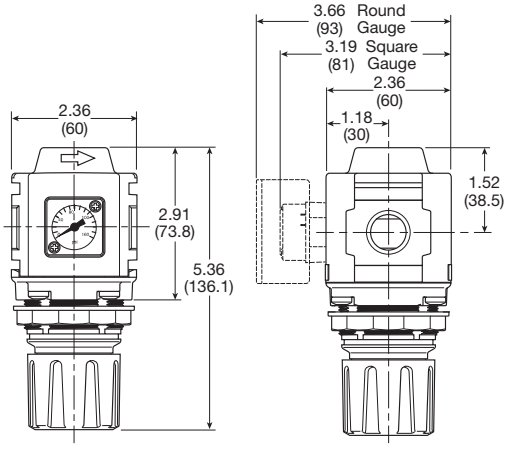

Inches (mm)

NOTE: 1.90 in. (48mm) hole required for panel nut mounting.

Flow Charts

1/4 Regulator

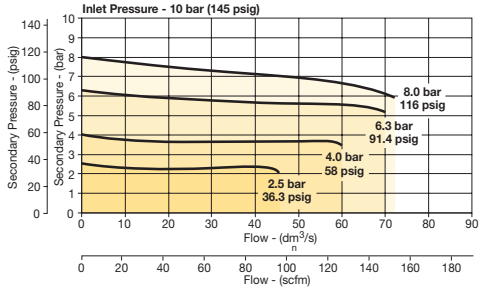

3/8 Regulator

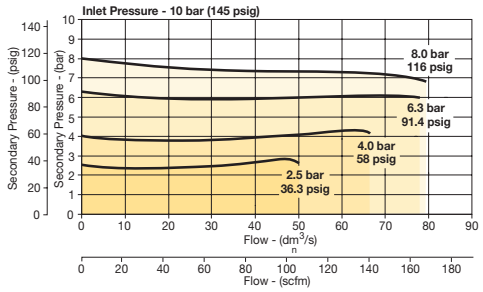

1/2 Regulator

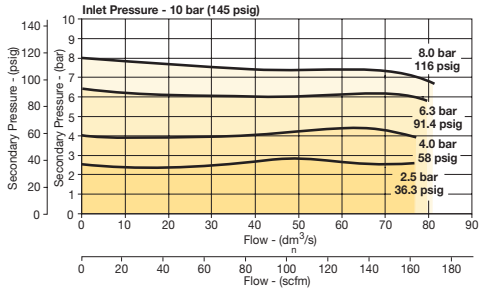

Gauges

Square flush mount gauge	0-4 bar	**K4511SCR04B**
	0-11 bar	**K4511SCR11B**
	0-60 psig	**K4511SCR060**
	0-160 psig	**K4511SCR160**
Square with adapter kit	0-4 bar	**P6G-PR10040**
	0-11 bar	**P6G-PR10110**
	0-60 psig	**P6G-PR90060**
	0-160 psig	**P6G-PR90160**
50mm (2") round 1/4" center back mount	0-30 psig / 0-2 bar	**K4520N14030**
	0-60 psig / 0-4 bar	**K4520N14060**
	0-160 psig / 0-11 bar	**K4520N14160**
	0-300 psig / 0-20 bar	**K4520N14300**

For best performance, regulated pressure should always be set by increasing the pressure up to the desired setting.

For inventory, lead times, and kit lookup, visit www.pdnplu.com

Parker Hannifin Corporation
Pneumatic Division
Richland, Michigan
www.parker.com/pneumatics

Tel: +45 63 12 83 00 | Email: ps@hymatik.com | www.hymatik.com | Hvidkaervej 27a, DK-5250 Odense SV, Denmark

P32 Common - P1 Regulator – Compact

- Manifold style regulator with line pressure on both sides.
- Pressure output is at front or rear.
- Inlet ports 1/4", 3/8" or 1/2" (NPT, BSPP & BSPT)
- Working port 1/4"
- Robust construction
- Secondary pressure ranges
- Secondary aspiration plus balanced poppet provides quick response and accurate pressure regulation
- Relieving & non-relieving types
- Non-rising knob

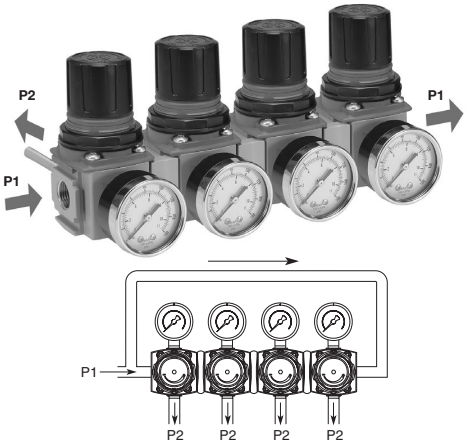

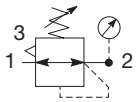

Self relieving regulator with gauge

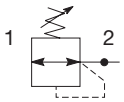

Non-relieving regulator

Port Size	Description (Relieving)	Gauge	Part Number
1/4"	125 psig (8 bar)	None	**P32HB92BNNP**
3/8"	125 psig (8 bar)	None	**P32HB93BNNP**
1/2"	125 psig (8 bar)	None	**P32HB94BNNP**

Operating information

Flow capacity*: 1/4, 3/8, 1/2	30 dm^3/s (64 scfm)
Operating temperature:	-25°C to 65.5°C (-13°F to 150°F)
Supply pressure (max):	300 psig (20 bar)
Adjusting range pressure:	0 to 30 psig (0 to 2 bar) 0 to 60 psig (0 to 4 bar) 0 to 125 psig (0 to 8 bar) 0 to 232 psig (0 to 16 bar)
Gauge port (2 each):	1/4 NPT, BSPP, BSPT
Weight:	0.50 lb (1.10 kg)

* Inlet pressure 145 psig (10 bar). Secondary pressure 91.3 psig (6.3 bar).

Ordering Information:

P32HB 9 2 B N N P

Basic Series

Global Modular Compact Regulator	P32HB

Thread Type

BSPP	1
BSPT	2
NPT	9

Port Size †

1/4	2
3/8	3
1/2	4

† Working port 1/4".

Relief

Relieving	B
Non-Relieving	N

Adjustment

N	Non-Rising Knob
T	T-Handle

Adjustment Range

With Square Gauge		With Round Gauge	
psig	bar		
1 = 30*	V = 2*	Z	30 psig; 2 bar; 0.2 MPa
3 = 60	S = 4	M	60 psig; 4 bar; 0.4 MPa
5 = 125	T = 8	G	125 psig; 8 bar; 0.8 MPa
		J	250 psig; 17 bar; 1.7 MPa
		Without Gauge	
		Y	30 psig; 2 bar; 0.2 MPa
		L	60 psig; 4 bar; 0.4 MPa
		N	125 psig; 8 bar; 0.8 MPa
		H	250 psig; 17 bar; 1.7 MPa

* Regulator comes with gauge respective to the adjustment range selected.

Mounting

P	Plastic Panel Mount Nut

☐ Most popular.

For inventory, lead times, and kit lookup, visit www.pdnplu.com

Parker Hannifin Corporation
Pneumatic Division
Richland, Michigan
www.parker.com/pneumatics

Material Specifications

Body	Aluminum
Adjustment knob	Acetal
Bonnet	Glass-filled nylon
Diaphragm assembly	Nitrile / zinc
Valve assembly	Brass / nitrile
Springs	Steel, stainless steel
Seals	Nitrile
Panel nut	Acetal

Repair and Service Kits

Diaphagm repair kit - relieving	**P32KB00RB**
Diaphagm repair kit - non-relieving	**P32KB00RC**
Panel mount nut - aluminum	**P32KA00MM**
Panel mount nut - plastic	**P32KA00MP**
Angle bracket (attaches via panel nut)	**P32KB00MR**
T-bracket with body connector	**P32KA00MT**
T-bracket	**P32KA00MB**
Body connector	**P32KA00CB**

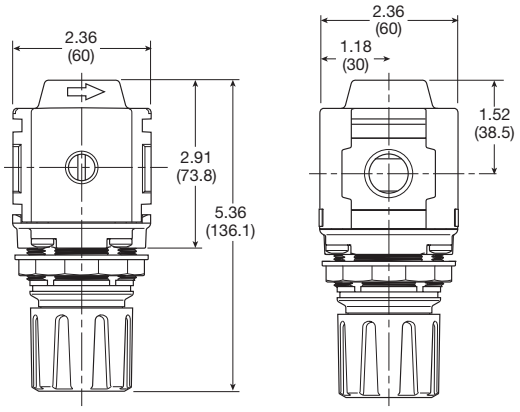

Inches (mm)

NOTE: 1.90 in. (48mm) hole required for panel nut mounting.

Flow Charts

P32 Common Port Regulator

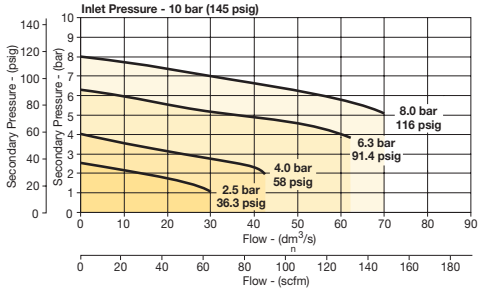

⚠ WARNING

Product rupture can cause serious injury.
Do not connect regulator to bottled gas.
Do not exceed Maximum primary pressure rating.

CAUTION:

REGULATOR PRESSURE ADJUSTMENT – The working range of knob adjustment is designed to permit outlet pressures within their full range. Pressure adjustment beyond this range is also possible because the knob is not a limiting device. This is a common characteristic of most industrial regulators, and limiting devices may be obtained only by special design. For best performance, regulated pressure should always be set by increasing the pressure up to the desired setting.

Gauges

Square flush mount gauge	0-4 bar	**K4511SCR04B**
	0-11 bar	**K4511SCR11B**
	0-60 psig	**K4511SCR060**
	0-160 psig	**K4511SCR160**
Square with adapter kit	0-4 bar	**P6G-PR10040**
	0-11 bar	**P6G-PR10110**
	0-60 psig	**P6G-PR90060**
	0-160 psig	**P6G-PR90160**
50mm (2") round 1/4" center back mount	0-30 psig / 0-2 bar	**K4520N14030**
	0-60 psig / 0-4 bar	**K4520N14060**
	0-160 psig / 0-11 bar	**K4520N14160**
	0-300 psig / 0-20 bar	**K4520N14300**

For best performance, regulated pressure should always be set by increasing the pressure up to the desired setting.

Tel: +45 63 12 83 00 | Email: ps@hymatik.com | www.hymatik.com | Hvidkaervej 27a, DK-5250 Odense SV, Denmark

07R Regulators – Standard

- Secondary aspiration plus balanced poppet provides quick response and accurate pressure regulation
- Rolling diaphragm for extended life
- Two high flow 1/4" gauge ports can be used as additional outlets
- Easily serviced
- Removable non-rising knob for panel mounting and tamper resistance
- 1/2", 3/4" ports (NPT, BSPP)



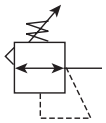

Port Size	Description	Part Number
1/2"	Without Gauge	**07R313AC**
1/2"	With 160 Psi Gauge	**07R318AC**
3/4"	Without Gauge	**07R413AC**
3/4"	With 160 Psi Gauge	**07R418AC**

NOTE: 2.0 Dia. (51 mm) hole required for panel mounting.

Operating information

Supply pressure (max):		250 psig (17.2 bar)
Secondary pressure ranges		
Standard		2 to 125 psig (0 to 8.6 bar)
Low		1 to 60 psig (0 to 4.1 bar)
High		5 to 250 psig (0.4 to 17.2 bar)
Operating temperature:		32°F to 175°F (0°C to 80°C)
Low temperature		-4°F to 125°F (-20°C to 52°C)
Flow capacity†:		
High flow	1/2"	90 scfm (42.5 dm³/s, ANR)
	3/4"	90 scfm (42.5 dm³/s, ANR)
Gauge ports (2):		1/4 inch (can be used as additional full flow 1/4 inch outlet ports)
Weight:		2.5 lb (1.1 kg)

† scfm = Standard cubic feet per minute at 100 psig inlet, 90 psig no flow secondary setting and 10 psig pressure drop.

Ordering Information:

07R | **3** | **13** | **A** | **C** | ☐ | ☐ | ☐

Port Size

1/2 inch	3
3/4 inch	4

Pressure Range

Without Gauge	
60 psig	11
125 psig	13
250 psig	15
With Gauge*	
60 psig	16
125 psig	18
250 psig	21

* Includes 1-1/2" dial face gauge.

Relief

Relieving	A
Non-Relieving	L

Spring Type by Preset / Limited Pressure:
For Preset / Limited Pressure 26 to 50 use 60 psi spring
For Preset / Limited Pressure 51 to 90 use 125 psi spring

Engineering Level

Current	C

Port Type

Blank	NPT
1*	BSPP

* 1/4 & 3/8 inch meet ISO 1179-1 Standard.

Options

Blank	No Option
L†	Preset Non-Adjustable
P†	Preset Adjustable
R	Reverse Flow

† Inlet Pressure is 100 psig. For other pressures, contact factory.

Preset / Pressure Limited

Blank	None
XXX*	Preset Pressure

* Available preset / pressure limited range, 10 to 90 psig in 5 psig increments. For higher pressures, contact factory.
(Example: 065 = 65 psig)

☐ Most popular.

For inventory, lead times, and kit lookup, visit www.pdnplu.com

Parker Hannifin Corporation
Pneumatic Division
Richland, Michigan
www.parker.com/pneumatics

Tel: +45 63 12 83 00 | Email: ps@hymatik.com | www.hymatik.com | Hvidkaervej 27a, DK-5250 Odense SV, Denmark

Material Specifications

Adjusting stem	Steel
Body	Zinc
Bonnet, piston stem, valve poppet & cap	Plastic
Collar, knob	Plastic
Diaphragm	Nitrile
Seals	Nitrile
Spring, poppet	Stainless
Spring, control	Steel

Repair and Service Kits

Bonnet assembly kit	**PS715P**
Control knob	**P04069B**
2" dial face 60 psig (0 to 4.1 bar), gauge	**K4520N14060**
2" dial face 160 psig (0 to 11.0 bar), gauge	**K4520N14160**
2" dial face 300 psig (0 to 20.7 bar), gauge	**K4520N14300**
1-3/4" digital round face 160 psig (0 to 11.0 bar), gauge	**K4517N14160D**
Mounting bracket kit (includes panel mount nut)	**PS807P**
Panel mount nut, plastic	**P04082**
Panel Mount nut, metal	**P04079B**
Reverse flow service conversion kit, relieving	**PS808RP**
Relieving (includes poppet)	**PS808P**
Non-relieving (includes poppet)	**PS809P**
1-30 psig spring	**P01698**
1-60 psig spring	**P04062**
2-125 psig spring	**P04063**
5-250 psig spring	**P04064**
Tamperproof kit	**PS737P**

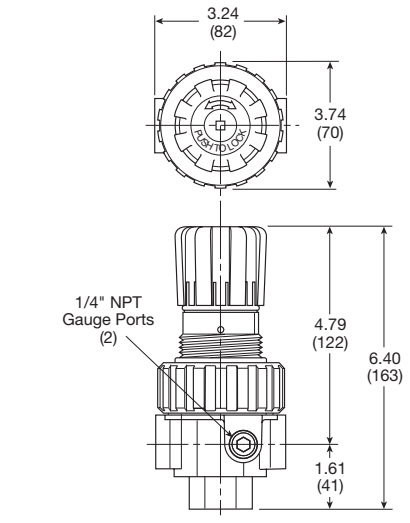

Inches (mm)

Flow Charts

1/2" Regulator

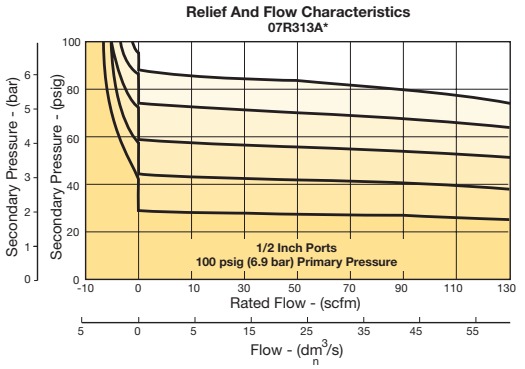

3/4" Regulator

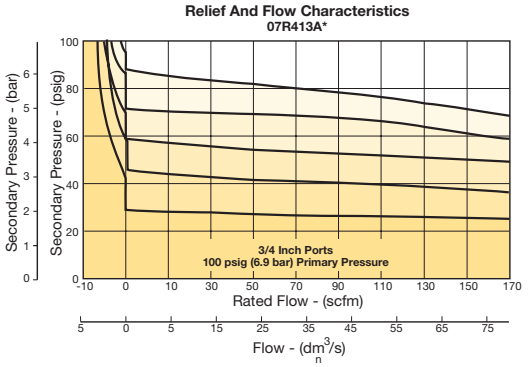

⚠ WARNING

Product rupture can cause serious injury.
Do not connect regulator to bottled gas.
Do not exceed Maximum primary pressure rating.

CAUTION:

REGULATOR PRESSURE ADJUSTMENT – The working range of knob adjustment is designed to permit outlet pressures within their full range. Pressure adjustment beyond this range is also possible because the knob is not a limiting device. This is a common characteristic of most industrial regulators, and limiting devices may be obtained only by special design. For best performance, regulated pressure should always be set by increasing the pressure up to the desired setting.

P33 Regulators – Standard

- Integral 1/2" or 3/4" ports (NPT, BSPP & BSPT)
- Robust but lightweight aluminum construction
- Secondary pressure ranges
- Secondary aspiration plus balanced poppet provides quick response and accurate pressure regulation
- Relieving & non-relieving types
- Non-rising knob



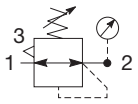

Self relieving regulator with gauge

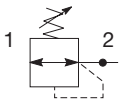

Non-relieving regulator

Port Size	Description (Relieving)	Gauge	Part Number
1/2"	125 psig (8 bar)	None	**P33RA94BNNP**
1/2"	125 psig (8 bar)	Round	**P33RA94BNGP**
3/4"	125 psig (8 bar)	None	**P33RA96BNNP**
3/4"	125 psig (8 bar)	Round	**P33RA96BNGP**

Operating information

Flow capacity*:	
1/2, 3/4	233 scfm (110 dm³/s, ANR)
Operating temperature:	-13°F to 150°F (-25°C to 65.5°C)
Supply pressure (max):	300 psig (20 bar)
Adjusting range pressure:	0 to 30 psig (0 to 2 bar) 0 to 60 psig (0 to 4 bar) 0 to 125 psig (0 to 8 bar) 0 to 250 psig (0 to 17 bar)
Gauge port (2 each):	1/4 NPT, BSPP, BSPT
Weight:	1.61 lb (0.62 kg)

* Inlet pressure 145 psig (10 bar). Secondary pressure 91.3 psig (6.3 bar).

Ordering Information:

P33RA 9 6 B N G P

Basic Series
Global Modular Standard Regulator — P33RA

Thread Type
BSPP 1
BSPT 2
NPT 9

Port Size
1/2 4
3/4 6

Relief
Relieving B
Non-Relieving N
Reverse Flow-Relieving R

Adjustment
Non-Rising Knob N

Mounting
P Plastic Panel Mount Nut

Adjustment Range

	With Round Gauge
Z	30 psig; 2 bar; 0.2 MPa
M	60 psig; 4 bar; 0.4 MPa
G	125 psig; 8 bar; 0.8 MPa
J	250 psig; 17 bar; 1.7 MPa
	Without Gauge
Y	30 psig; 2 bar; 0.2 MPa
L	60 psig; 4 bar; 0.4 MPa
N	125 psig; 8 bar; 0.8 MPa
H	250 psig; 17 bar; 1.7 MPa

☐ Most popular.

Tel: +45 63 12 83 00 | Email: ps@hymatik.com | www.hymatik.com | Hvidkaervej 27a, DK-5250 Odense SV, Denmark

Material Specifications

Body	Aluminum
Adjustment knob	Acetal
Body cap	ABS
Bonnet	Glass-filled nylon
Diaphragm assembly	Nitrile / zinc
Valve assembly	Brass / nitrile
Springs	Steel, stainless steel
Seals	Nitrile
Panel nut	Acetal

Repair and Service Kits

Diaphagm repair kit - relieving	**P33KA00RB**
Diaphagm repair kit - non-relieving	**P33KA00RC**
Panel mount nut - aluminum	**P33KA00MM**
Panel mount nut - plastic	**P33KA00MP**
Angle bracket (attaches via panel nut)	**P33KA00MR**
T-bracket with body connector	**P32KA00MT**
T-bracket	**P32KA00MB**
Body connector	**P32KA00CB**

⚠ WARNING

Product rupture can cause serious injury.
Do not connect regulator to bottled gas.
Do not exceed Maximum primary pressure rating.

CAUTION:

REGULATOR PRESSURE ADJUSTMENT – The working range of knob adjustment is designed to permit outlet pressures within their full range. Pressure adjustment beyond this range is also possible because the knob is not a limiting device. This is a common characteristic of most industrial regulators, and limiting devices may be obtained only by special design. For best performance, regulated pressure should always be set by increasing the pressure up to the desired setting.

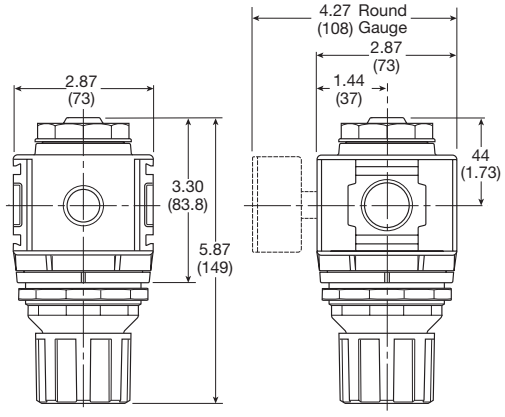

Inches (mm)

NOTE: 2.40 in. (61mm) hole required for panel nut mounting.

Flow Charts

1/2 Regulator

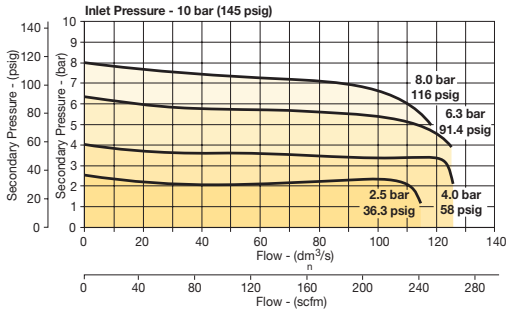

3/4 Regulator

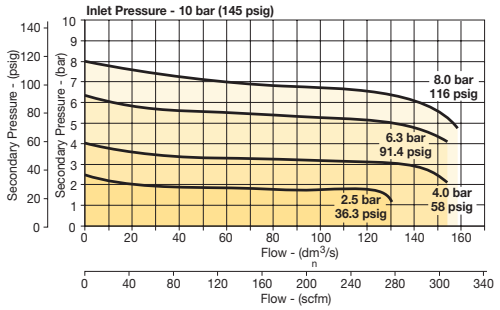

Gauges

50mm (2") round 1/4" center back mount	0-30 psig / 0-2 bar	**K4520N14030**
	0-60 psig / 0-4 bar	**K4520N14060**
	0-160 psig / 0-11 bar	**K4520N14160**
	0-300 psig / 0-20 bar	**K4520N14300**

For best performance, regulated pressure should always be set by increasing the pressure up to the desired setting.

Parker Hannifin Corporation
Pneumatic Division
Richland, Michigan
www.parker.com/pneumatics

P3Y Regulators

- Integral 3/4" or 1" ports (BSPP and NPT)
- Robust but lightweight aluminium construction
- Secondary pressure ranges 12 and 16 bar
- Rolling diaphragm for extended life
- Secondary aspiration plus rolling diaphragm provides quick response and accurate pressure regulation
- Optional tamperproof regulator padlock
- Reverse flow / relieving option
- Low temperature -40°C (-40°F)



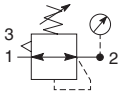

Self relieving regulator with gauge

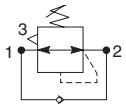

Reverse flow relieving regulator

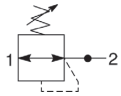

Non-relieving regulator

Port Size	Description	Part Number
3/4"	174 psig relieving	**P3YRA96BNEN**
3/4"	174 psig relieving + pressure gauge	**P3YRA96BNFN**
1"	174 psig relieving	**P3YRA98BNEN**
1"	174 psig relieving + pressure gauge	**P3YRA98BNFN**

Operating information

Supply pressure (max)*:		254 psig (17.5 bar)
Operating temperature:		-40°F to 140°F (-40°C to 60°C)
Flow capacity†:	3/4"	380 scfm (179.3 dm^3/s, ANR)
	1"	550 scfm (259.6 dm^3/s, ANR)
Fluid:		Compressed air
Gauge port (x2)		1/4"
Weight:		2.4 lb (1.08 kg)

† Inlet pressure 145 psig (10 bar) inlet pressure, 91.4 psig (6.3 bar) set pressure and 7.3 psig (0.5 bar) pressure drop.

* Air supply must be dry enough to avoid ice formation at temperatures below 35.6°F (2°C).

Ordering Information

P3YRA **9** **6** **B** **N** **E** **N**

Basic Series	
Regulator	P3YRA

Thread Type*	
BSPP	1
NPT	9

Port Size	
3/4	6
1	8

Relief	
B	Relieving
R	Reverse Flow / Relieving

Lockable	
N	Standard
A†	Lockable

Adjustment Range	
E	0 to 174 psi (0 to 12 bar), No Gauge
H	0 to 232 psi (0 to 16 bar), No Gauge
F	0 to 174 psi (0 to 12 bar), Gauge
J	0 to 232 psi (0 to 16 bar), Gauge

Notes:
* For 1-1/2" ported unit, please order P3YKA*BCP port block kit separately.
† Not field convertible.

☐ Most popular.

For inventory, lead times, and kit lookup, visit www.pdnplu.com

Parker Hannifin Corporation
Pneumatic Division
Richland, Michigan
www.parker.com/pneumatics

Material specifications

Body	Aluminium
Bonnet	Glass filled polyamide
Regulator cover	ABS
Control knob	Glass filled polyamide
Valve	Brass / NBR
Seals	Nitrile NBR
Screws	Steel / zinc plated

Repair and Service Kits

Angle bracket + metal lock ring	**P3YKA00MS**
Panel mounting nut	**P3YKA00MM**
Diaphragm kit (relieving type)	**P3YKA00RR**
Diaphragm kit (non-relieving type)	**P3YKA00RN**
0 to 160 psig (0 to 10 bar), gauge 1/4" port	**K4520N14160**
0 to 300 psig (0 to 20 bar), gauge 1/4" port	**K4520N14300**

⚠ WARNING

Product rupture can cause serious injury.
Do not connect regulator to bottled gas.
Do not exceed Maximum primary pressure rating.

CAUTION:

REGULATOR PRESSURE ADJUSTMENT – The working range of knob adjustment is designed to permit outlet pressures within their full range. Pressure adjustment beyond this range is also possible because the knob is not a limiting device. This is a common characteristic of most industrial regulators, and limiting devices may be obtained only by special design. For best performance, regulated pressure should always be set by increasing the pressure up to the desired setting.

Flow characteristics

(3/4") Regulator

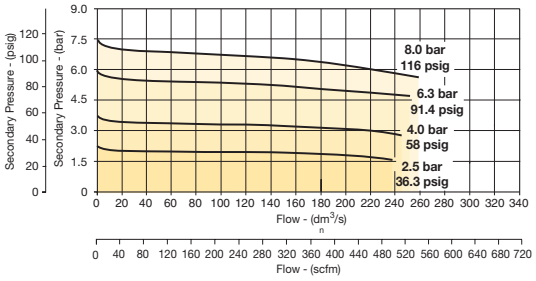

(1") Regulator

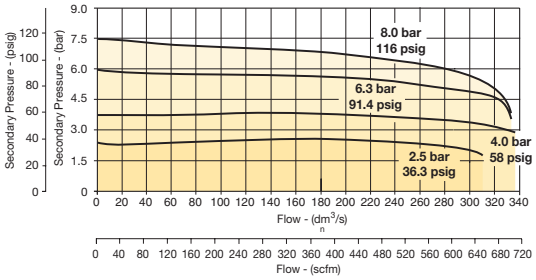

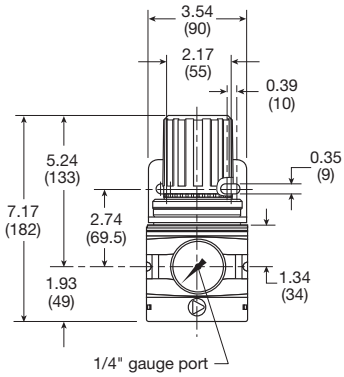

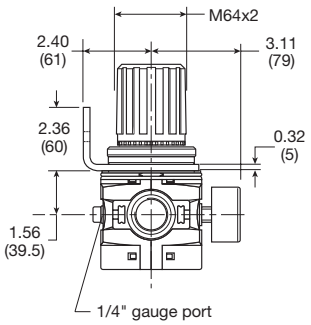

Inches (mm)

For inventory, lead times, and kit lookup, visit www.pdnplu.com

Parker Hannifin Corporation
Pneumatic Division
Richland, Michigan
www.parker.com/pneumatics

Tel: +45 63 12 83 00 | Email: ps@hymatik.com | www.hymatik.com | Hvidkaervej 27a, DK-5250 Odense SV, Denmark

P3NR Regulators – Hi-Flow

- Port blocks (PB) available to provide 1-1/2" port extension to 1" ported bodies
- Self relieving feature plus balanced poppet provides quick response and accurate pressure regulation
- Solid control piston for extended life
- 3/4", 1", 1-1/2" ports (NPT, BSPP)

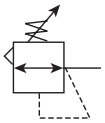



Port Size	Description	Part Number
3/4"	Without Gauge	**P3NRA96BNN**
3/4"	With 160 Psi Gauge	**P3NRA96BNG**
1"	Without Gauge	**P3NRA98BNN**
1"	With 160 Psi Gauge	**P3NRA98BNG**
1-1/2" #	Without Gauge	**P3NRA9PBNN**
1-1/2" #	With 160 Psi Gauge	**P3NRA9PBNG**

1" port body with 1-1/2" port block.

NOTE: 2.0 Dia. (51 mm) hole required for panel mounting.

Operating information

Supply pressure (max):		250 psig (17.2 bar)
Operating temperature:		32°F to 175°F (0°C to 80°C)
Flow capacity†:		
High flow	3/4"	200 scfm (94.4 dm^3/s, ANR)
	1"	300 scfm (141.6 dm^3/s, ANR)
	1-1/2"	300 scfm (141.6 dm^3/s, ANR)
Gauge ports (2):		1/4 inch (can be used as additional full flow 1/4 inch outlet ports)
Weight:	3/4", 1"	4.2 lb (1.9 kg)
	1-1/2" #	5.3 lb (2.4 kg)

† scfm = Standard cubic feet per minute at 100 psig inlet, 90 psig no flow secondary setting and 10 psig pressure drop.

1" port body with 1-1/2 port block

Ordering Information:

P3N R A 9 8 B N N

Engineering Level

Current	A

Port Type

G Thread (BSPP) Female	1*
NPT Female	9

* 3/4 & 1 inch meets ISO 1179-1 standard.

Port Size

3/4" (w/o port blocks)	6
1" (w/o port blocks)	8
1-1/2" Port Blocks (w/ 1" ported body)	P

Relief

B	Relieving

Adjustment

N	Non-Rising Knob

Pressure Gauge

Without Gauge	
N	125 psi (0 to 8 bar)
H	250 psi (0 to 17 bar)
With Gauge	
G	125 psi (0 to 8 bar)
J	250 psi (0 to 17 bar)

Note: BSPP ported units supplied using NPT ported bodies and BSPP port block kits.

☐ Most popular.

Tel: +45 63 12 83 00 | Email: ps@hymatik.com | www.hymatik.com | Hvidkaervej 27a, DK-5250 Odense SV, Denmark

Material Specifications

Adjusting stem	Steel
Body	Aluminum
Bonnet	Aluminum
Knob	Plastic
Piston	Plastic
Poppet assembly	Brass
Seals	Nitrile
Springs, poppet & control	Steel

Repair and Service Kits

Control knob	**P3NKA00PN**
2" dial face 60 psig (0 to 4.1 bar), gauge	**K4520N14060**
2" dial face 160 psig (0 to 11.0 bar), gauge	**K4520N14160**
2" dial face 300 psig (0 to 20.7 bar), gauge	**K4520N14300**
1-3/4" digital round face 160 psig (0 70 11.0 bar), gauge	**K4517N14160D**
Mounting bracket kit*	**P3NKA00MW**
Relieving	**P3NKA00RR**
Non-relieving	**P3NKA00RN**
1-60 psig spring	**C10A1304**
2-125 psig spring	**C10A1308**
5-250 psig spring	**C10A1317**

* If 1-1/2 BSPP E02 fittings are required, use P3NKA0BMW.

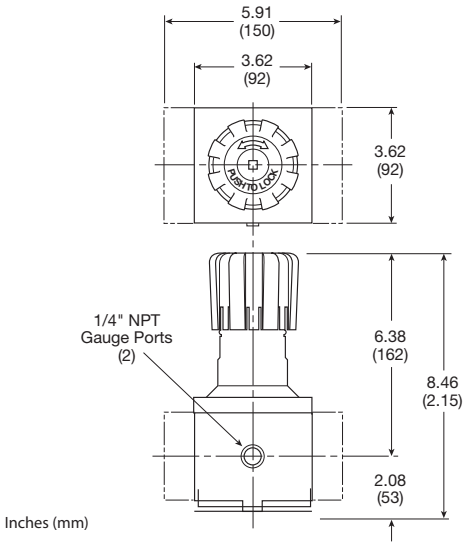

Flow Charts

3/4" Regulator

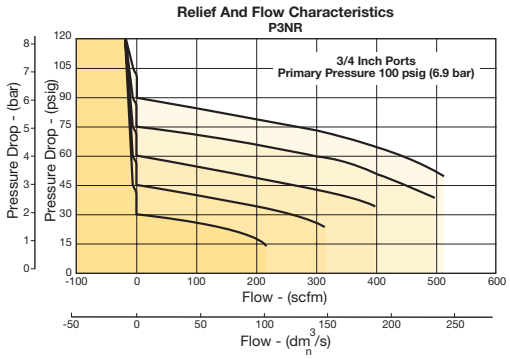

1" & 1-1/2" Regulator

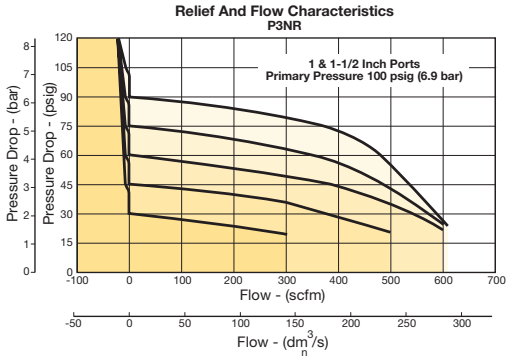

⚠ WARNING

Product rupture can cause serious injury.
Do not connect regulator to bottled gas.
Do not exceed Maximum primary pressure rating.

CAUTION:

REGULATOR PRESSURE ADJUSTMENT – The working range of knob adjustment is designed to permit outlet pressures within their full range. Pressure adjustment beyond this range is also possible because the knob is not a limiting device. This is a common characteristic of most industrial regulators, and limiting devices may be obtained only by special design. For best performance, regulated pressure should always be set by increasing the pressure up to the desired setting.

Tel: +45 63 12 83 00 | Email: ps@hymatik.com | www.hymatik.com | Hvidkaervej 27a, DK-5250 Odense SV, Denmark

R119 Regulators – Standard

- High flow performance featuring rugged design for the most demanding applications
- Ideal for those installations calling for constant pressure with wide variation in flow
- Diaphragm operated design with balanced poppet design for quick and accurate regulation
- Secondary aspiration plus balanced poppet provides quick response and accurate pressure regulation
- Heavy duty tee handle adjustment
- Reverse flow version available
- Panel mount version available
- 1/4", 3/8", 1/2" ports (NPT, BSPP)



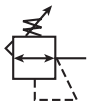

Port Size	Description (0-125 psig reduced pressure)	Part Number
1/4"	Without Gauge, Relieving, NPT	**R119-02C**
1/4"	With Gauge, Relieving, NPT	**R119-02CG**
3/8"	Without Gauge, Relieving, NPT	**R119-03C**
3/8"	With Gauge, Relieving, NPT	**R119-03CG**
1/2"	Without Gauge, Relieving, NPT	**R119-04C**
1/2"	With Gauge, Relieving, NPT	**R119-04CG**

Operating information

Supply pressure (max):		300 psig (0 to 20.7 bar)
Reduced pressure range:		2 to 125 psig (0.15 to 8.5 bar)
Operating temperature:		40°F to 125°F (4.4°C to 52°C)
Flow capacity†:		
High flow	1/4"	100 scfm (47.2 dm^3/s, ANR)
	3/8"	110 scfm (51.9 dm^3/s, ANR)
	1/2"	150 scfm (70.8 dm^3/s, ANR)
Gauge ports (2):		1/4 inch
Weight:	1/4"	1.8 lb (0.82 kg)
	3/8"	1.8 lb (0.82 kg)
	1/2"	3.2 lb (1.45 kg)

† scfm = Standard cubic feet per minute at 100 psig inlet, 75 psig no flow secondary setting and 20 psig pressure drop.

Ordering Information:

R119 – 02 C [ ] /**

Port Threads

NPT	–
G BSPP	G

Port Size

1/4 inch	02
3/8 inch	03
1/2 inch	04

Reduced Pressure Range

0-25 psig	A
0-60 psig	B
0-125 psig	C
0-250 psig	D

Options

Blank	None
G	Gauge
K†	Non-Relieving
X64**	Fluorocarbon O-Rings And Diaphragm
X80*	Reverse Flow
X7	Brass Bottom Plug

* Reverse flow for use downstream of control valves.
** Brass bottom plug standard with X64 option.
† Not available with 250 psig spring.

Engineering Level

/**	Will Be Entered at Factory

☐ Most popular.

Parker Hannifin Corporation
Pneumatic Division
Richland, Michigan
www.parker.com/pneumatics

Tel: +45 63 12 83 00 | Email: ps@hymatik.com | www.hymatik.com | Hvidkaervej 27a, DK-5250 Odense SV, Denmark

Material Specifications

Adjusting screw, springs	Steel
Body, spring cage	Zinc
Bottom plug	Nylon
Innervalve	Brass
Seals	Buna N

Repair and Service Kits

2" dial face 60 psig (0 to 4.1 bar), gauge	**K4520N14060**
2" dial face 160 psig (0 to 11.0 bar), gauge	**K4520N14160**
2" dial face 300 psig (0 to 20.7 bar), gauge	**K4520N14300**
1-3/4" digital round face 160 psig (0 to 11.0 bar), gauge	**K4517N14160D**
Mounting bracket, 1/4", 3/8"	**SA15Y57**
Mounting bracket, 1/2"	**18A57**
Panel mount conversion kit, 1/4", 3/8"	**4202**
Panel mount conversion kit, 1/2"	**4204**
Non-relieving diaphragm, valve assembly (1/4", 3/8"; all psig)	**RK118Y**
Relieving diaphragm, valve assembly (1/4", 3/8"; all psig)	**RK119Y**
Non-Relieving diaphragm, valve assembly (1/2"; 25, 60, 125 psig)	**RK118A**
Relieving diaphragm, valve assembly (1/2"; 25, 60, 125 psig)	**RK119A**
Relieving diaphragm, valve assembly (1/2"; 250 psig)	**RK119A250**
Spring cage & T-handle kit (1/4 & 3/8)	**RKC119Y**
Spring cage & insert only kit (1/2)	**SAC18A3/BK**

For fluorocarbon repair kits, add X64 to kit number suffix.

CAUTION:

REGULATOR PRESSURE ADJUSTMENT – The working range of knob adjustment is designed to permit outlet pressures within their full range. Pressure adjustment beyond this range is also possible because the knob is not a limiting device. This is a common characteristic of most industrial regulators, and limiting devices may be obtained only by special design. For best performance, regulated pressure should always be set by increasing the pressure up to the desired setting.

R119-02C, R119-03C

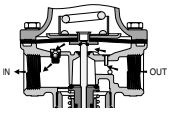

X80 Reverse Flow Option

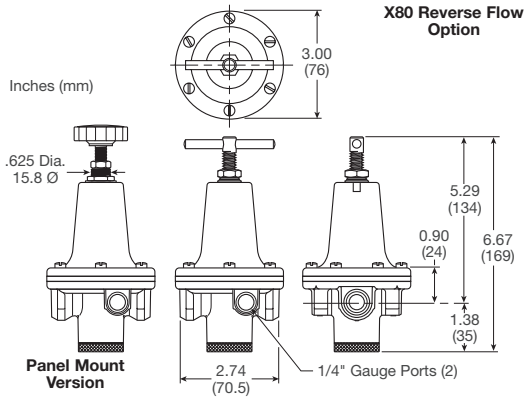

Panel Mount Version

Flow Charts

1/4" Regulator

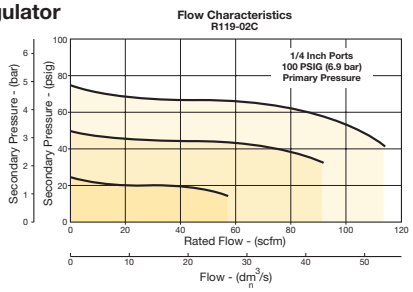

3/8" Regulator

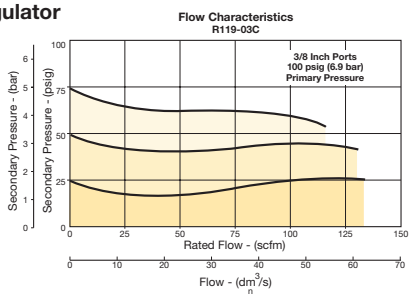

1/2" Regulator

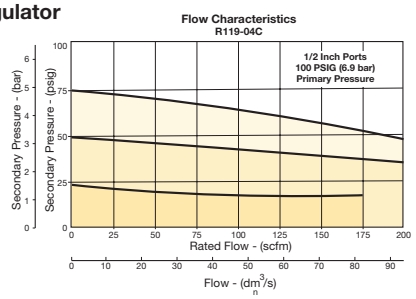

⚠ WARNING

Product rupture can cause serious injury.
Do not connect regulator to bottled gas.
Do not exceed Maximum primary pressure rating.

R119-04C

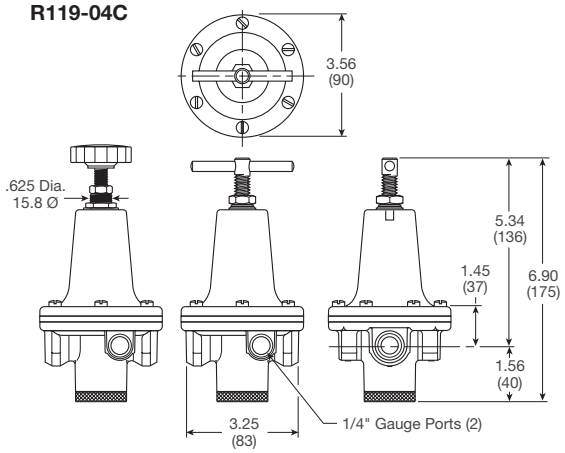

For inventory, lead times, and kit lookup, visit www.pdnplu.com

Parker Hannifin Corporation
Pneumatic Division
Richland, Michigan
www.parker.com/pneumatics

Tel: +45 63 12 83 00 | Email: ps@hymatik.com | www.hymatik.com | Hvidkaervej 27a, DK-5250 Odense SV, Denmark

R119 Regulators – Hi-Flow

- High flow performance featuring rugged design for the most demanding applications
- Ideal for those installations calling for constant pressure with wide variation in flow
- Diaphragm operated design with balanced poppet design for quick and accurate regulation
- Secondary aspiration plus balanced poppet provides quick response and accurate pressure regulation
- Heavy duty tee handle adjustment
- Reverse flow version available
- 3/4", 1", 1-1/2" ports (NPT, BSPP)



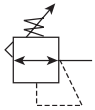

Port Size	Description (0-125 psig reduced pressure)	Part Number
3/4"	Without gauge, relieving, NPT	**R119-06C**
3/4"	With gauge, relieving, NPT	**R119-06CG**
1"	Without gauge, relieving, NPT	**R119-08C**
1"	With gauge, relieving, NPT	**R119-08CG**
1-1/2"	Without gauge, relieving, NPT	**R119-12C**
1-1/2"	With gauge, relieving, NPT	**R119-12CG**

Operating information

Supply pressure (max):		300 psig (0 to 20.7 bar)
Reduced pressure range:		2 to 125 psig (0.15 to 8.5 bar)
Operating temperature:		40°F to 125°F (4.4°C to 52°C)
Flow capacity†:		
High flow	3/4"	300 scfm (141.6 dm^3/s, ANR)
	1"	400 scfm (188.8 dm^3/s, ANR)
	1-1/2"	500 scfm (236 dm^3/s, ANR)
Gauge ports (2):		1/4 inch
Weight:	3/4"	6.2 lb (2.81 kg)
	1"	6.2 lb (2.81 kg)
	1-1/2"	7.2 lb (3.27 kg)

† scfm = Standard cubic feet per minute at 100 psig inlet, 75 psig no flow secondary setting and 20 psig pressure drop.

Ordering Information:

R119 – 06 C [ ] /**

Port Threads

NPT	–
G BSPP	G

Port Size

3/4 inch	06
1 inch	08
1-1/2 inch	12

Reduced Pressure Range

0-125 psig	C
0-250 psig	D

Options

Blank	None
G	Gauge
K	Non-Relieving
X64**	Fluorocarbon O-Rings and Diaphragm
X80*	Reverse Flow

* Reverse flow for use downstream of control valves.
** Brass bottom plug standard with X64 option.

Engineering Level

/**	Will Be Entered at Factory

☐ Most popular.

Tel: +45 63 12 83 00 | Email: ps@hymatik.com | www.hymatik.com | Hvidkaervej 27a, DK-5250 Odense SV, Denmark

Material Specifications

Adjusting screw, springs	Steel
Body, spring cage	Zinc
Bottom plug	Nylon
Innervalve	Brass
Seals	Buna N

Repair and Service Kits

2" dial face 60 psig (0 to 4.1 bar), gauge	**K4520N14060**
2" dial face 160 psig (0 to 11.0 bar), gauge	**K4520N14160**
2" dial face 300 psig (0 to 20.7 bar), gauge	**K4520N14300**
1-3/4" digital round face 160 psig (0 to 11.0 bar), gauge	**K4517N14160D**
Mounting bracket kit	**18B57**
Non-relieving diaphragm, valve assembly (3/4", 1")	**RK118B**
Non-relieving diaphragm, valve assembly (1-1/2")	**RK118D**
Relieving diaphragm, valve assembly (3/4", 1")	**RK119B**
Relieving diaphragm, valve assembly (1-1/2")	**RK119D**

For Fluorocarbon Repair Kits, add X64 to kit number suffix.

⚠ WARNING

Product rupture can cause serious injury.
Do not connect regulator to bottled gas.
Do not exceed Maximum primary pressure rating.

CAUTION:

REGULATOR PRESSURE ADJUSTMENT – The working range of knob adjustment is designed to permit outlet pressures within their full range. Pressure adjustment beyond this range is also possible because the knob is not a limiting device. This is a common characteristic of most industrial regulators, and limiting devices may be obtained only by special design. For best performance, regulated pressure should always be set by increasing the pressure up to the desired setting.

R119-06C, R119-08C

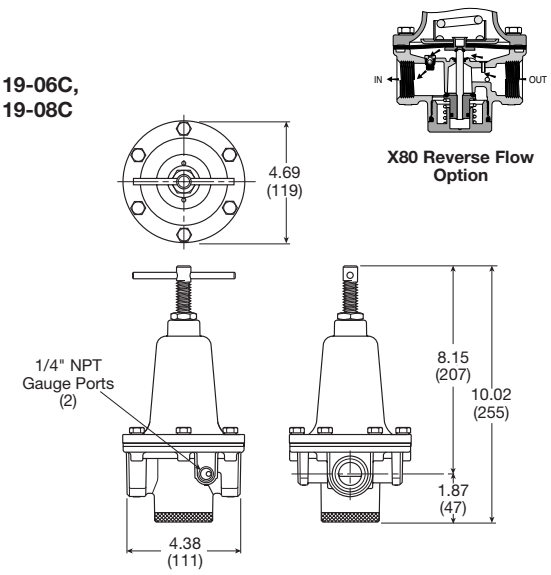

R119-12C

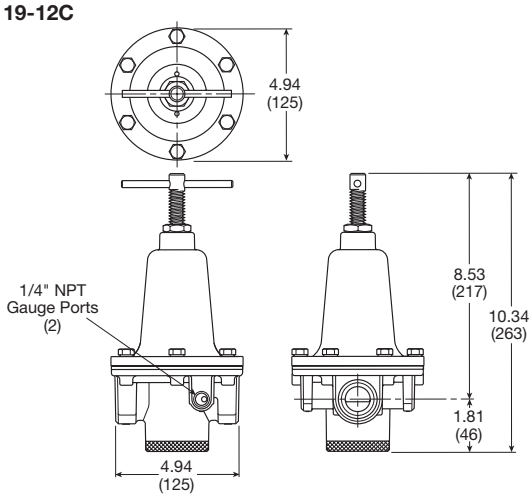

Inches (mm)

Flow Charts

3/4" Regulator

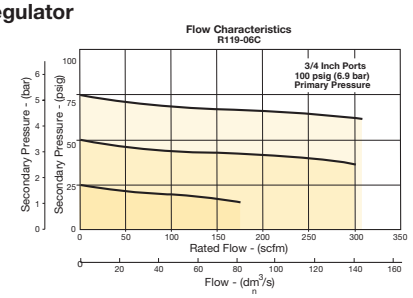

1" Regulator

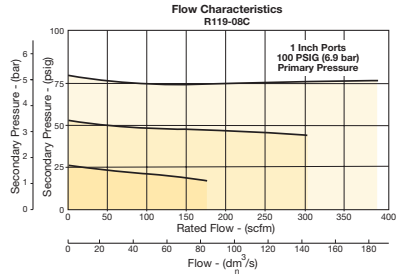

1-1/2" Regulator

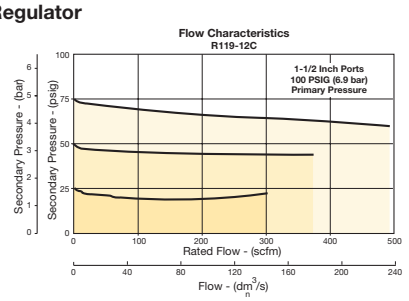

For inventory, lead times, and kit lookup, visit www.pdnplu.com

Parker Hannifin Corporation
Pneumatic Division
Richland, Michigan
www.parker.com/pneumatics

R216 Semi-Precision Regulators

- High flow performance featuring rugged design for the most demanding applications
- Ideal for those installations calling for constant pressure with wide variation in flow
- Diaphragm operated with large surface area and aspirator for quick and precise regulation
- Heavy duty tee handle adjustment
- Panel mount version available
- 1/4", 3/8" ports (NPT BSPP)



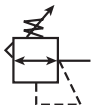

Port Size	Description (Relieving Type)	Part Number
1/4"	Tee Handle, Without Gauge, NPT	**R216-02F**
1/4"	Hand Wheel Knob, Without Gauge, NPT	**R216-02FP**
3/8"	Tee Handle, Without Gauge, NPT	**R216-03F**
3/8"	Hand Wheel Knob, Without Gauge, NPT	**R216-03FP**

Operating information

Supply pressure:	300 psig (20.7 bar)
Reducted pressure range:	0.5 to 20 psig (0.03 to 1.4 bar)
Operating temperature:	40°F to 125°F (4.4°C to 52°C)
Flow capacity†:	40 scfm (19.3 dm^3/s, ANR)
Gauge ports (1):	1/8 inch
Weight:	2.2 lb (100 kg)

† scfm = Standard cubic feet per minute at 100 psig inlet, 75 psig no flow secondary setting and 20 psig pressure drop.

Ordering Information:

R216 – **02** **F** ☐ **/***

Port Threads	
NPT	–
BSPP	G

Pressure Range	
1/4 inch	02
3/8 inch	03

Reduced Pressure Range	
0 to 8 psig (0.6 bar)	E
0 to 20 psig (1.4 bar)	F
0 to 50 psig (3.4 bar)	H

Options	
K	Non-Relieving
P	Panel Mount with Nut

Engineering Level
Will Be Entered at Factory.

☐ Most popular.

For inventory, lead times, and kit lookup, visit www.pdnplu.com

Parker Hannifin Corporation
Pneumatic Division
Richland, Michigan
www.parker.com/pneumatics

Tel: +45 63 12 83 00 | Email: ps@hymatik.com | www.hymatik.com | Hvidkaervej 27a, DK-5250 Odense SV, Denmark

Material Specifications

Body, spring cage	Zinc
Bottom plug	Brass
Seals	Buna N

Repair and Service Kits

Round plastic knob	**118Y51**
Panel mount conversion kit (Spring cage, knob, hardware)	**4206**
Non-relieving diaphragm, valve assembly (1/4", 3/8")	**RK216KY**
Relieving diaphragm, valve assembly (1/4", 3/8")	**RK216Y**

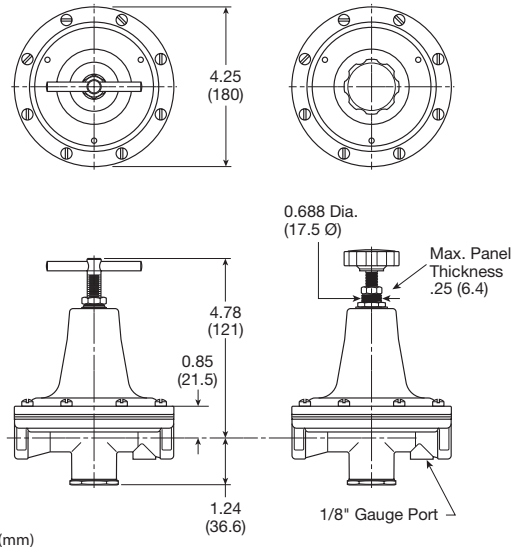

Inches (mm)

Flow Charts

R216 1/4" & 3/8" Regulator

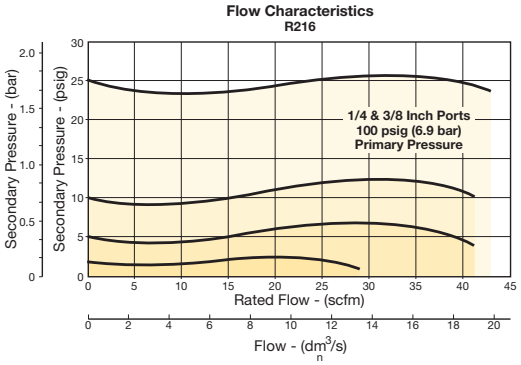

⚠ WARNING

Product rupture can cause serious injury.
Do not connect regulator to bottled gas.
Do not exceed Maximum primary pressure rating.

CAUTION:

REGULATOR PRESSURE ADJUSTMENT – The working range of knob adjustment is designed to permit outlet pressures within their full range. Pressure adjustment beyond this range is also possible because the knob is not a limiting device. This is a common characteristic of most industrial regulators, and limiting devices may be obtained only by special design. For best performance, regulated pressure should always be set by increasing the pressure up to the desired setting.

Tel: +45 63 12 83 00 | Email: ps@hymatik.com | www.hymatik.com | Hvidkaervej 27a, DK-5250 Odense SV, Denmark

09R Regulators – Hi-Flow

- Piston design for reduced downtime
- High flow
- Balanced poppet for quick and accurate regulation.
- Two full flow 1/4" gauge ports which can be used as additional outlets
- Self relieving piston standard
- 2" ports (NPT)

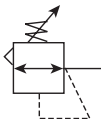



Port Size	Description	Part Number
2"	Without gauge, relieving	**09R813BA**

Operating information

Supply pressure (max):	300 psig (0 to 20.7 bar)
Secondary pressure range:	10 to 125 psig (0.7 to 8.6 bar) 10 to 180 psig (0.7 to 12.4 bar)
Operating temperature:	32°F to 150°F (0°C to 65.6°C)
Flow capacity†: High flow	 1000 scfm (472 dm³/s, ANR)
Gauge ports (2):	1/4 inch (can be used as additional full flow 1/4 inch outlet ports)
Weight:	10.82 lb (53 kg)

† scfm = Standard cubic feet per minute at 100 psig inlet, 90 psig no flow secondary setting and 10 psig pressure drop.

Ordering Information:

09R | **8** | **13** | **B** | **A**

Port Threads	
2 inch	8

Pressure Range	
125 psig	13
180 psig	15

Relief	
B	Relieving
M	Non-Relieving

Engineering Level	
A	Current

☐ Most popular.

Tel: +45 63 12 83 00 | Email: ps@hymatik.com | www.hymatik.com | Hvidkaervej 27a, DK-5250 Odense SV, Denmark

Material Specifications

Adjusting stem & springs	Steel
Body	Zinc Alloy
Bonnet, piston stem, valve poppet & cap	Aluminum
Piston, cap	Plastic
Seals	Nitrile

Repair and Service Kits

Body service kit	**PS603P**
2" dial face 160 psig (0 to 11.0 bar), gauge	**K4520N14160**
2" dial face 300 psig (0 to 20.7 bar), gauge	**K4520N14300**
1-3/4" digital round face 160 psig (0 to 11.0 bar), gauge	**K4517N14160D**
Mounting bracket kit	**PS605P**
Non-relieving	**PS604P**
Relieving	**PS626P**
0 to 125 psig spring	**PS602P**
0 to 180 psig spring	**PS627**

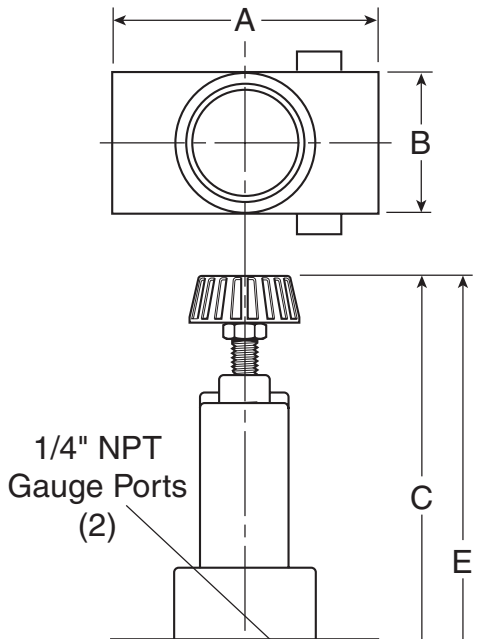

Flow Charts

2" Regulator

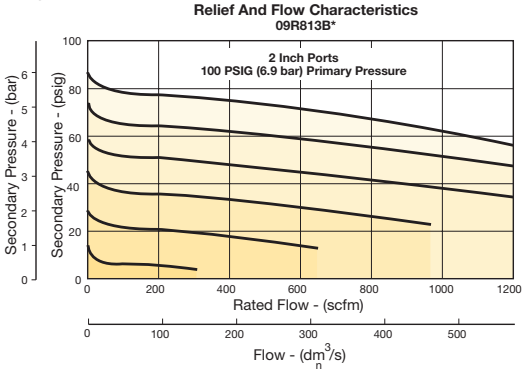

⚠ WARNING

Product rupture can cause serious injury.
Do not connect regulator to bottled gas.
Do not exceed Maximum primary pressure rating.

CAUTION:

REGULATOR PRESSURE ADJUSTMENT – The working range of knob adjustment is designed to permit outlet pressures within their full range. Pressure adjustment beyond this range is also possible because the knob is not a limiting device. This is a common characteristic of most industrial regulators, and limiting devices may be obtained only by special design. For best performance, regulated pressure should always be set by increasing the pressure up to the desired setting.

51R Regulators – Relieving

- Pressure reference indicating dial face
- Non-rising, pressure-adjustment dial
- Self-relieving
- Full pressure adjustment in less than one full turn
- Recommended for pilot-air applications
- Constant bleed, piston operated
- 1/4" port (NPT, BSPP)



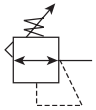

Port Size	Description	Part Number
1/4"	Standard Pressure 5 to 160 psig (0.34 to 11 bar)	**51R126RA**
1/4"	Low Pressure 2 to 40 psig (0.14 to 3 bar)	**51R125RA**

Operating information

Adjusting pressure range:	2 to 40 psig (0 to 2.8 bar) 5 to 160 psig (0 to 11.0 bar)
Bleed Rate:	0.05 scfm (0.02 dm^3/s, ANR)
Operating temperature (max):	32°F to 150°F (0°C to 65.6°C)
Supply pressure (max):	300 psig (20.7)
Flow capacity†:	0.7 scfm (0.3 dm^3/s, ANR)
Weight:	1.3 lb (0.5 kg)

† scfm = Inlet pressure 100 psig (6.9 bar) inlet. Secondary pressure 90 psig (6.2 bar).

Ordering Information:

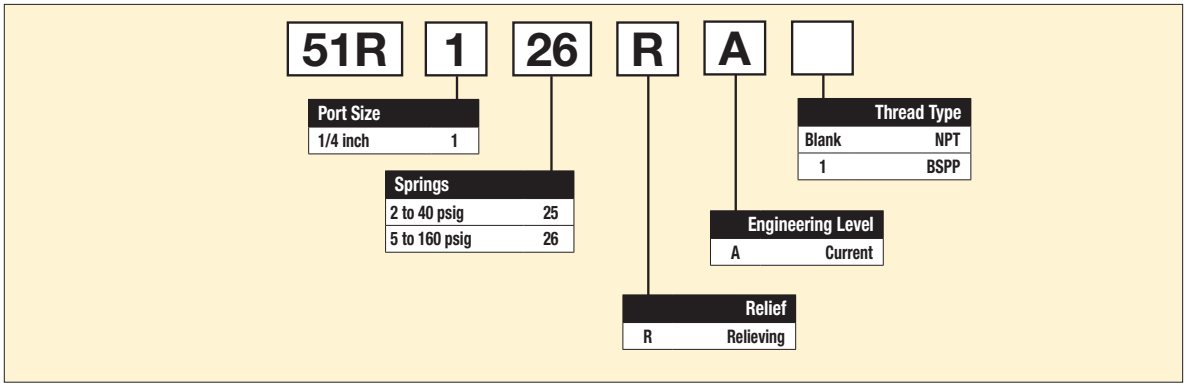

☐ Most popular.

For inventory, lead times, and kit lookup, visit www.pdnplu.com

Parker Hannifin Corporation
Pneumatic Division
Richland, Michigan
www.parker.com/pneumatics

Tel: +45 63 12 83 00 | Email: ps@hymatik.com | www.hymatik.com | Hvidkaervej 27a, DK-5250 Odense SV, Denmark

Material Specifications

Body	Zinc
Bonnet	Zinc / brass
Piston	Acetal
Seals	Nitrile
Springs	Steel
Valve assembly	Brass / nitrile / acetal

Repair and Service Kits

Adjustment dial knob	**RRP-16-024**
O-ring, repair kit	**GRP-95-260**
Piston and bonnet repair kit	**RRP-95-765**
Spring, regulation, belleville washer, 2 to 40 psig (2.8 bar)	**RRP-95-906**
Spring, regulation, belleville washer, 5 to 160 psig (11.0 bar)	**RRP-95-905**
Tamper resistant kit	**RRP-95-585**
Valve, pilot with o-ring and valve spring	**RRP-96-934**

Flow Charts

51R 1/4" Regulator

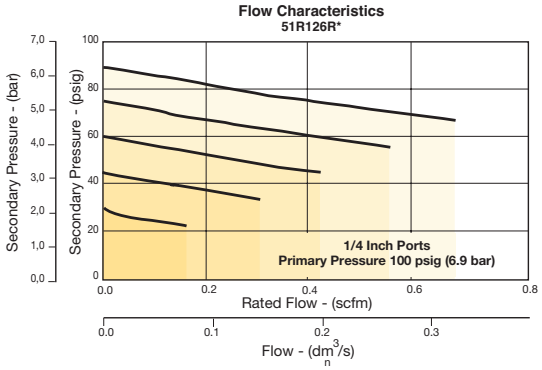

⚠ WARNING

Product rupture can cause serious injury.
Do not connect regulator to bottled gas.
Do not exceed Maximum primary pressure rating.

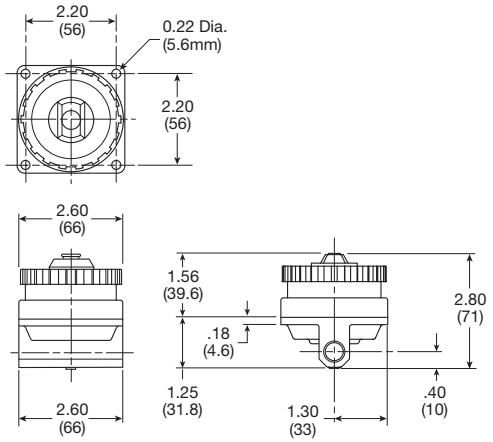

Inches (mm)

For inventory, lead times, and kit lookup, visit www.pdnplu.com

Parker Hannifin Corporation
Pneumatic Division
Richland, Michigan
www.parker.com/pneumatics

Tel: +45 63 12 83 00 | Email: ps@hymatik.com | www.hymatik.com | Hvidkaervej 27a, DK-5250 Odense SV, Denmark

52R Regulators – Relieving

- Balanced poppet design
- Non-rising, pressure-adjusting dial
- High-relief flow (3/16" relief orifice)
- Two 1/4" gauge ports
- Constant bleed, piston operated
- 1/4", 3/8", 1/2", 3/4" ports (NPT, BSPP)

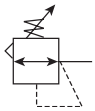



Port Size	Description	Part Number
1/4"	Standard Pressure 5 to 160 psig (0.34 to 11 bar)	**52R126RA**
1/4"	Low Pressure 2 to 40 psig (0.14 to 3 bar)	**52R125RA**
3/8"	Standard Pressure 5 to 160 psig (0.34 to 11 bar)	**52R226RA**
3/8"	Low Pressure 2 to 40 psig (0.14 to 3 bar)	**52R225RA**
1/2"	Standard Pressure 5 to 160 psig (0.34 to 11 bar)	**52R326RA**
1/2"	Low Pressure 2 to 40 psig (0.14 to 3 bar)	**52R325RA**
3/4"	Standard Pressure 5 to 160 psig (0.34 to 11 bar)	**52R426RA**
3/4"	Low Pressure 2 to 40 psig (0.14 to 3 bar)	**52R425RA**

Operating information

Adjusting pressure range:		2 to 40 psig (0 to 2.8 bar) 5 to 160 psig (0 to 11.0 bar)
Bleed Rate:		0.05 scfm (0.02 dm^3/s, ANR)
Operating temperature (max):		32°F to 150°F (0°C to 65.6°C)
Supply pressure (max):		300 psig (20.7)
Flow capacity†:	1/4"	117 scfm (55.2 dm^3/s, ANR)
	3/8"	180 scfm (85 dm^3/s, ANR)
	1/2"	195 scfm (92 dm^3/s, ANR)
	3/4"	220 scfm (103.8 dm^3/s, ANR)
Gauge ports:		Two ports 1/4" (can be used as additional high flow 1/4 inch outlet ports)
Weight:		2.3 lb (1.04 kg)

† scfm = Inlet pressure 100 psig (6.9 bar) inlet. Secondary pressure 90 psig (6.2 bar).

Ordering Information:

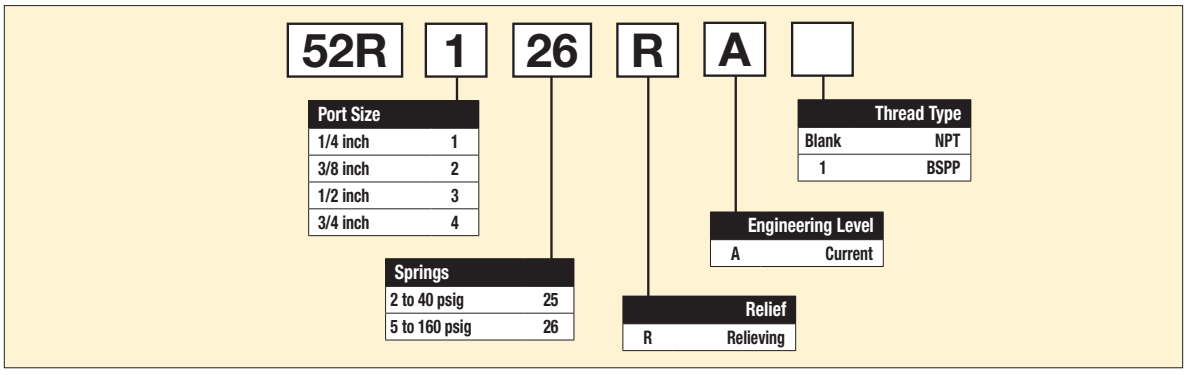

☐ Most popular.

Parker Hannifin Corporation
Pneumatic Division
Richland, Michigan
www.parker.com/pneumatics

Tel: +45 63 12 83 00 | Email: ps@hymatik.com | www.hymatik.com | Hvidkaervej 27a, DK-5250 Odense SV, Denmark

Material specifications

Body	Zinc
Bonnet	Zinc / brass
Piston	Acetal
Seals	Nitrile
Springs	Steel
Valve assembly	Brass / nitrile / acetal

Repair and Service Kits

Adjustment dial knob	**RRP-16-024**
O-ring, repair kit	**GRP-95-260**
Piston bottom and o-ring seal	**RRP-95-192**
Pistons and bonnet repair kit	**RRP-95-766**
Spring, regulation, belleville washer – 2 to 40 psig range	**RRP-95-906**
Spring, regulation, belleville washer – 5 to 160 psig range	**RRP-95-905**
Tamper resistant kit	**RRP-95-585**
Valve, main with U-cup seal & bottom plug	**RRP-95-914**
Valve, main with U-cup seal	**RRP-95-151**
Valve, pilot with o-ring and valve spring	**RRP-96-934**

⚠ WARNING

Product rupture can cause serious injury.
Do not connect regulator to bottled gas.
Do not exceed Maximum primary pressure rating.

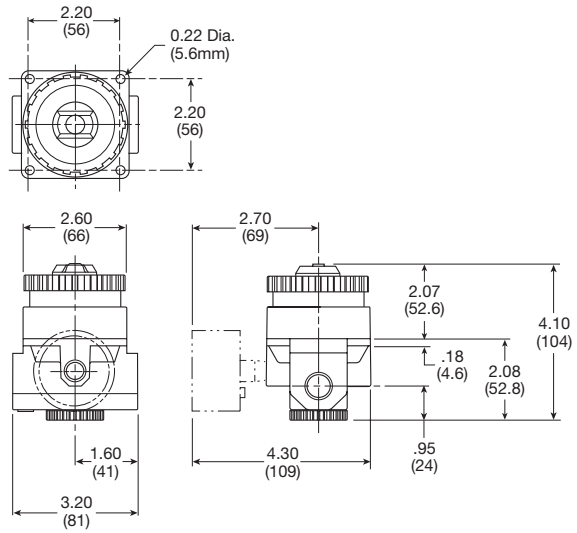

Inches (mm)

Flow Charts

52R 1/4" Regulator

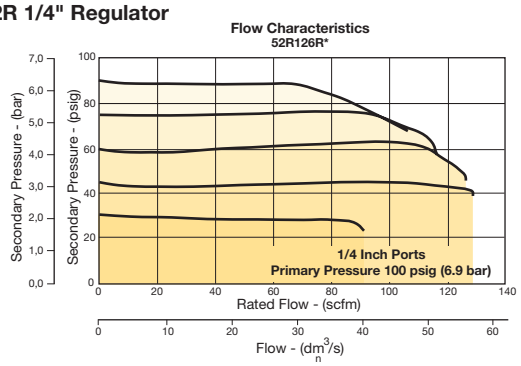

52R 3/8" Regulator

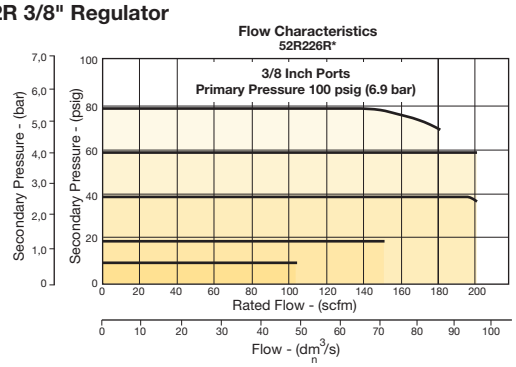

52R 1/2" Regulator

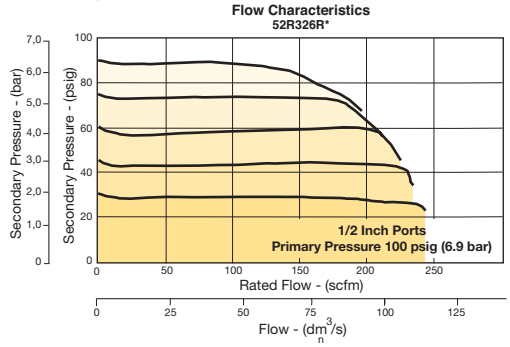

52R 3/4" Regulator

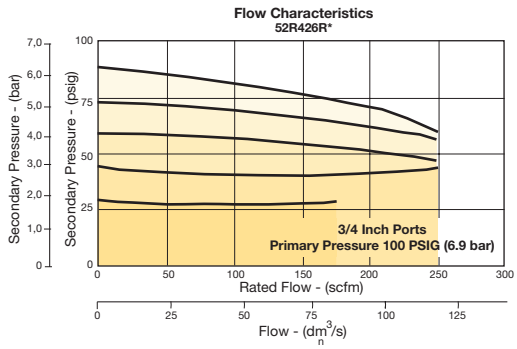

For inventory, lead times, and kit lookup, visit www.pdnplu.com

Parker Hannifin Corporation
Pneumatic Division
Richland, Michigan
www.parker.com/pneumatics

53R Regulators – Relieving

- Balanced poppet design
- Non-rising, pressure-adjusting dial
- High-relief flow (3/16" relief orifice)
- Two 1/4" gauge ports
- Constant bleed, piston operated
- 3/4", 1", 1-1/4" ports (NPT, BSPP)

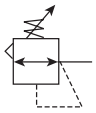



Port Size	Description	Part Number
3/4"	Standard pressure 5 to 160 psig (0.34 to 11 bar)	**53R426RA**
3/4"	Low Pressure 2 to 40 psig (0.14 to 3 bar)	**53R425RA**
1"	Standard pressure 5 to 160 psig (0.34 to 11 bar)	**53R526RA**
1"	Low Pressure 2 to 40 psig (0.14 to 3 bar)	**53R525RA**
1-1/4"	Standard Pressure 5 to 160 psig (0.34 to 11 bar)	**53R626RA**
1-1/4"	Low pressure 2 to 40 psig (0.14 to 3 bar)	**53R625RA**

Operating information

Adjusting pressure range:		2 to 40 psig (0 to 2.8 bar) 5 to 160 psig (0 to 11.0 bar)
Bleed Rate:		0.05 scfm (0.02 dm³/s, ANR)
Operating temperature (max):		32°F to 150°F (0°C to 65.6°C)
Supply pressure (max):		300 psig (20.7)
Flow capacity†:	3/4" 1" 1-1/4"	400 scfm (188.8 dm³/s, ANR) 650 scfm (306.8 dm³/s, ANR) 700 scfm (330.4 dm³/s, ANR)
Gauge ports:		Two ports 1/4" (can be used as additional high flow 1/4 inch outlet ports)
Weight:		2.3 lb (1.04 kg)

† scfm = Inlet pressure 100 psig (6.9 bar) inlet. Secondary pressure 80 psig (5.5 bar).

Ordering Information:

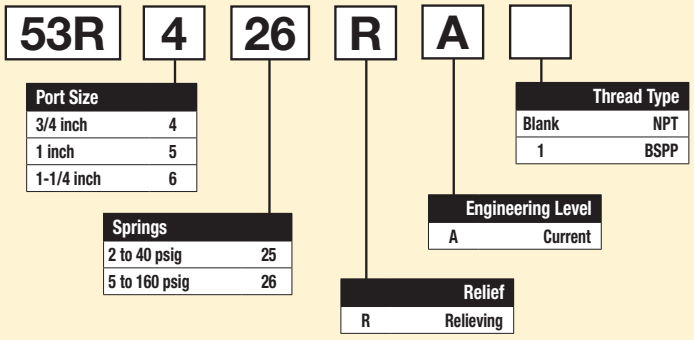

☐ Most popular.

Material Specifications

Body	Zinc
Bonnet	Zinc / brass
Piston	Acetal
Seals	Nitrile
Springs	Steel
Valve assembly	Brass / nitrile / acetal

Repair and Service Kits

Adjustment dial knob	**RRP-16-024**
O-ring, repair kit	**GRP-95-261**
Piston, bottom and o-ring seal	**RRP-95-192**
Pistons and bonnet repair kit	**RRP-95-766**
Spring, regulation, belleville washer – 2 to 40 psig range	**RRP-95-906**
Spring, regulation, belleville washer – 5 to 160 psig range	**RRP-95-905**
Tamper resistant kit	**RRP-95-585**
Valve, main with o-ring seal	**RRP-95-152**
Valve, pilot with o-ring and valve spring	**RRP-96-935**

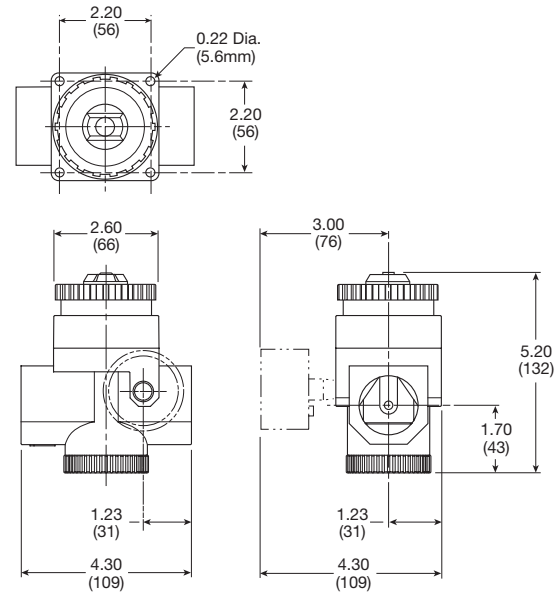

Inches (mm)

Flow Charts

53R 3/4" Regulator

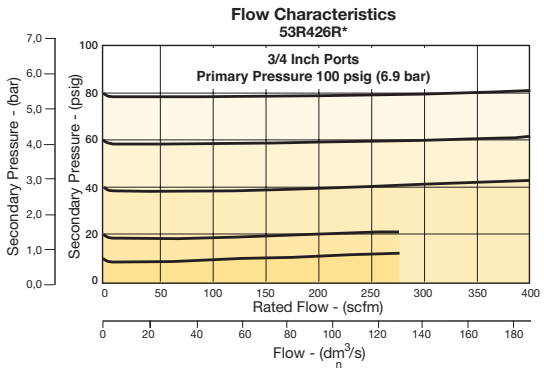

53R 1" Regulator

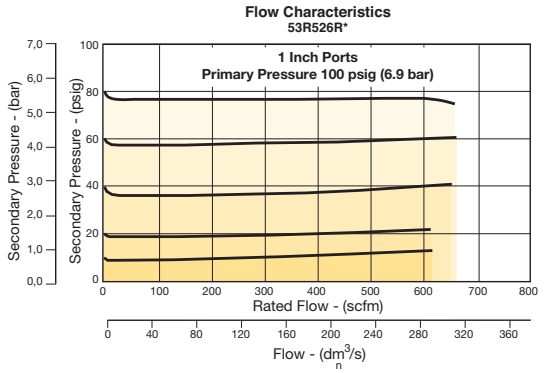

53R 31-14" Regulator

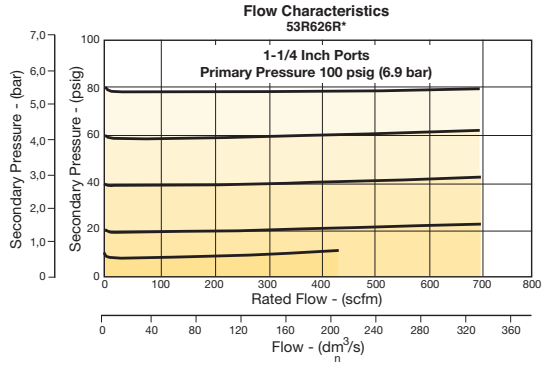

⚠ WARNING

Product rupture can cause serious injury.
Do not connect regulator to bottled gas.
Do not exceed Maximum primary pressure rating.

For inventory, lead times, and kit lookup, visit www.pdnplu.com

Parker Hannifin Corporation
Pneumatic Division
Richland, Michigan
www.parker.com/pneumatics

Tel: +45 63 12 83 00 | Email: ps@hymatik.com | www.hymatik.com | Hvidkaervej 27a, DK-5250 Odense SV, Denmark

54R Regulators – Relieving

- Balanced poppet design
- Non-rising, pressure-adjusting dial
- High-relief flow (3/16" relief orifice)
- Two 1/4" gauge ports
- Constant bleed, piston operated
- 1-1/2", 2" ports (NPT, BSPP)

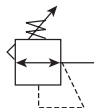



Port Size	Description	Part Number
1-1/2"	Standard Pressure 5 to 160 psig (0.34 to 11 bar)	**54R726RA**
1-1/2"	Low Pressure 2 to 40 psig (0.14 to 3 bar)	**54R725RA**
2"	Standard Pressure 5 to 160 psig (0.34 to 11 bar)	**54R826RA**
2"	Low Pressure 2 to 40 psig (0.14 to 3 bar)	**54R825RA**

Operating information

Adjusting pressure range:		2 to 40 psig (0 to 2.8 bar) 5 to 160 psig (0 to 11.0 bar)
Bleed Rate:		0.05 scfm (0.02 dm^3/s, ANR)
Operating temperature (max):		32°F to 150°F (0°C to 65.6°C)
Supply pressure (max):		300 psig (20.7)
Flow capacity†:	1-1/2" 2"	1,600 scfm (755 dm^3/s, ANR) 1,600 scfm (755 dm^3/s, ANR)
Gauge ports:		Two ports 1/4" (can be used as additional high flow 1/4 inch outlet ports)
Weight:		9 lb (4.1 kg)

† scfm = Inlet pressure 100 psig (6.9 bar) inlet. Secondary pressure 80 psig (5.5 bar).

Ordering Information:

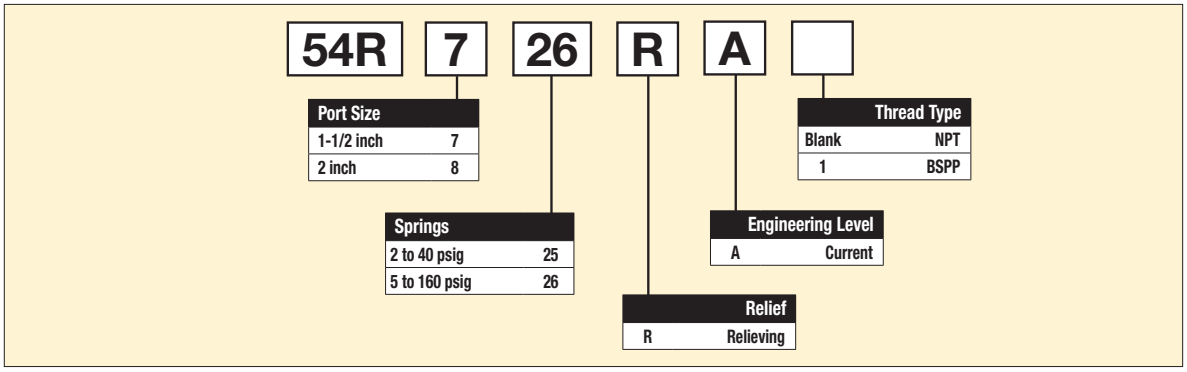

☐ Most popular.

Material Specifications

Body	Zinc
Bonnet	Zinc / brass
Piston	Zinc
Seals	Nitrile
Springs	Steel
Valve assembly	Brass / nitrile / acetal

Repair and Service Kits

Adjustment dial knob	**RRP-16-024**
O-ring, repair kit	**GRP-95-262**
Piston, bottom and o-ring seal	**RRP-95-192**
Pistons and bonnet repair kit	**RRP-95-766**
Spring, regulation, belleville washer – 2 to 40 psig range	**RRP-95-906**
Spring, regulation, belleville washer – 5 to 160 psig range	**RRP-95-905**
Spring, main valve	**RRP-95-024**
Tamper resistant kit	**RRP-95-585**
Valve, main with o-ring seal	**RRP-95-153**
Valve, pilot with o-ring and valve spring	**RRP-96-935**

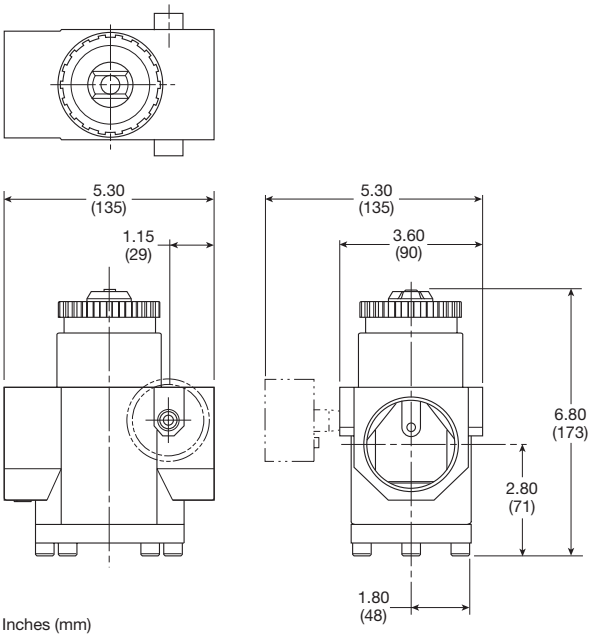

Inches (mm)

Flow Charts

54R 1-1/2" Regulator

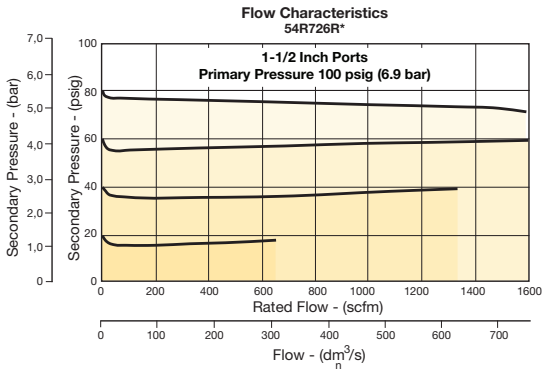

54R 2" Regulator

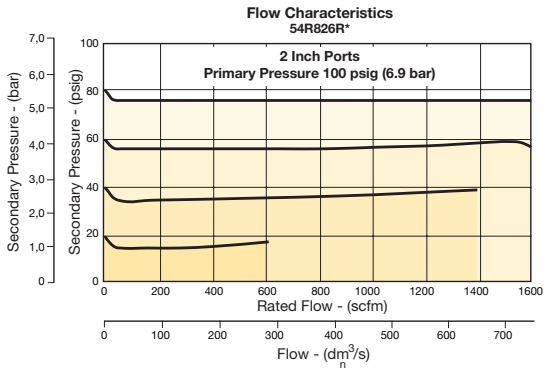

⚠ WARNING

Product rupture can cause serious injury.
Do not connect regulator to bottled gas.
Do not exceed Maximum primary pressure rating.

For inventory, lead times, and kit lookup, visit www.pdnplu.com

Parker Hannifin Corporation
Pneumatic Division
Richland, Michigan
www.parker.com/pneumatics

Tel: +45 63 12 83 00 | Email: ps@hymatik.com | www.hymatik.com | Hvidkaervej 27a, DK-5250 Odense SV, Denmark

11R Pilot Controlled Regulator – Compact

- Balanced poppet provides quick response and accurate pressure regulation
- Pilot controlled regulators can be mounted "out of reach" with pilot regulator installed in a convenient location
- Solid control piston for extended life
- Two full flow 1/4" gauge ports can be used as additional outlets
- Pilot port 1/4 Inch
- 1/4", 3/8", 1/2" ports (NPT, BSPP)



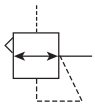

Port Size	Description	Part Number
1/4"	Without Gauge	**11R115PC**
1/4"	With 160 psi Gauge	**11R121PC**
3/8"	Without Gauge	**11R215PC**
3/8"	With 160 psi Gauge	**11R221PC**
1/2"	Without Gauge	**11R315PC**
1/2"	With 160 psi Gauge	**11R321PC**

NOTE: 2.0 Dia. (51 mm) hole required for panel mounting.

Operating information

Supply pressure (max):		0 to 250 psig (0 to 17.2 bar)
Operating temperature:		32°F to 175°F (0°C to 80°C)
Flow capacity†:		
High flow	1/4"	85 scfm (40 dm³/s, ANR)
	3/8"	95 scfm (44.8 dm³/s, ANR)
	1/2"	95 scfm (44.8 dm³/s, ANR)
Gauge ports (2):		1/4 inch (can be used as additional full flow 1/4 inch outlet ports)
Weight:		1.3 lb (0.53 kg)

† scfm = Standard cubic feet per minute at 100 psig inlet, 90 psig no flow secondary setting and 10 psig pressure drop.

Ordering Information:

11R	2	15	P	C	

Port Threads

1/4 inch	1
3/8 inch	2
1/2 inch	3

Relief / Gauge Options

Without gauge	
Non-relieving piston	14
Relieving piston	15
With gauge *	
Non-relieving piston	19
Relieving piston	21

* Includes 2" dial face gauge 0 to 300 psig.

Adjustment

P	Pilot Operated

Engineering Level

C	Current

Port Type

Blank	NPT
1	BSPP

☐ Most popular.

Material Specifications

Body & pilot cap	Zinc
Piston, valve poppet, & collar	Plastic
Seals	Nitrile
Springs	Steel

Repair and Service Kits

Seat Insert kit	**PS713P**
2" dial face 60 psig (0 to 4.1 bar), gauge	**K4520N14060**
2" dial face 160 psig (0 to 11.0 bar), gauge	**K4520N14160**
2" dial face 300 psig (0 to 20.7 bar), gauge	**K4520N14300**
1-3/4" digital round face 160 psig (0 to 11.0 bar), gauge	**K4517N14160D**
Mounting bracket kit (includes panel mount nut)	**PS707P**
Panel mount nut, plastic	**P04082**
Panel mount nut, metal	**P04079B**
Pilot conversion kit – relieving	**PS745P**
Non-Relieving	**PS747P**
Relieving	**PS749P**

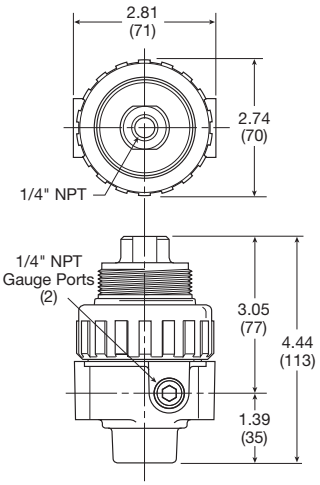

Inches (mm)

Flow Charts

1/2" Regulator

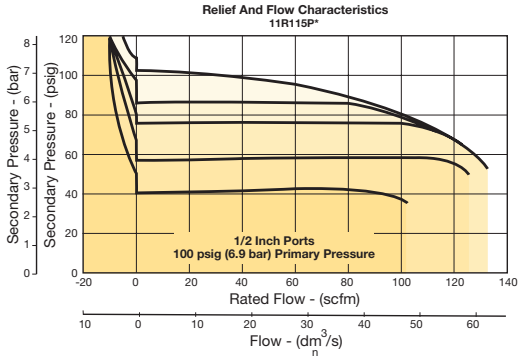

3/8" Regulator

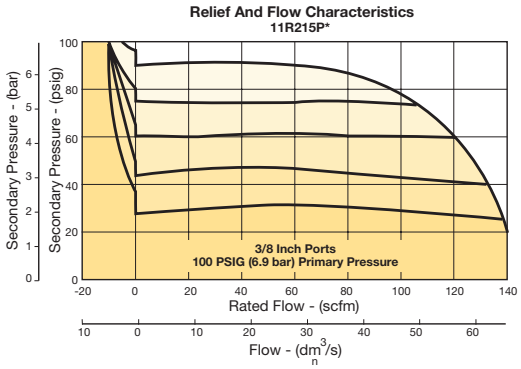

⚠ WARNING

Product rupture can cause serious injury.
Do not connect regulator to bottled gas.
Do not exceed Maximum primary pressure rating.

For inventory, lead times, and kit lookup, visit www.pdnplu.com

Parker Hannifin Corporation
Pneumatic Division
Richland, Michigan
www.parker.com/pneumatics

12R Pilot Controlled Regulator – Standard

- Balanced poppet provides quick response and accurate pressure regulation
- Pilot controlled regulators can be mounted “out of reach” with pilot regulator installed in a convenient location
- Solid control piston for extended life
- Two full flow 1/4" gauge ports can be used as additional outlets
- Pilot port 1/4 Inch
- 1/2", 3/4" ports (NPT, BSPP, BSPT)



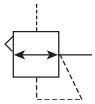

Port Size	Description	Part Number
1/2"	Without Gauge	**12R315PB**
1/2"	With 160 psi Gauge	**12R321PB**
3/4"	Without Gauge	**12R415PB**
3/4"	With 160 psi Gauge	**12R421PB**

NOTE: 2.0 Dia. (51 mm) hole required for panel mounting.

Operating information

Supply pressure (max):		0 to 250 psig (0 to 17.2 bar)
Operating temperature:		32°F to 175°F (0°C to 80°C)
Flow capacity†:		
High flow	1/2"	140 scfm (66 dm^3/s, ANR)
	3/4"	140 scfm (66 dm^3/s, ANR)
Gauge ports (2):		1/4 inch (can be used as additional full flow 1/4 inch outlet ports)
Weight:		2.0 lb (0.91 kg)

† scfm = Standard cubic feet per minute at 100 psig inlet, 90 psig no flow secondary setting and 10 psig pressure drop.

Ordering Information:

12R | **3** | **15** | **P** | **B** | ☐

Port Threads

1/2 inch	3
3/4 inch	4

Relief / Gauge Options

Without Gauge	
Non-Relieving Piston	14
Relieving Piston	15
With Gauge *	
Non-Relieving Piston	19
Relieving Piston	21

* Includes 2" dial face gauge 0 to 300 psig.

Adjustment

P	Pilot Operated

Engineering Level

B	Current

Port Type

Blank	NPT
1	BSPP
2	BSPT

☐ Most popular.

Tel: +45 63 12 83 00 | Email: ps@hymatik.com | www.hymatik.com | Hvidkaervej 27a, DK-5250 Odense SV, Denmark

Material Specifications

Body & pilot cap	Zinc
Piston, valve poppet, & collar	Plastic
Seals	Nitrile
Springs	Steel

Repair and Service Kits

Seat insert kit	**PS813P**
2" dial face 60 psig (0 to 4.1 bar)	**K4520N14060**
2" dial face 160 psig (0 to 11.0 bar)	**K4520N14160**
2" dial face 300 psig (0 to 20.7 bar)	**K4520N14300**
1-3/4" digital round face 160 psig (0 to 11.0 bar) **K4517N14160D**	
Mounting bracket kit (includes panel mount nut)	**PS807P**
Panel mount nut, plastic	**P04082**
Panel mount nut, metal	**P04079B**
Pilot conversion kit – relieving	**PS745P**
Non-relieving	**PS847P**
Relieving	**PS849P**

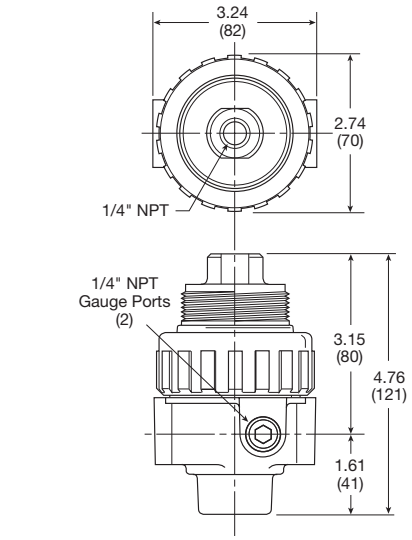

Inches (mm)

Flow Charts

1/2 and 3/4" Regulator

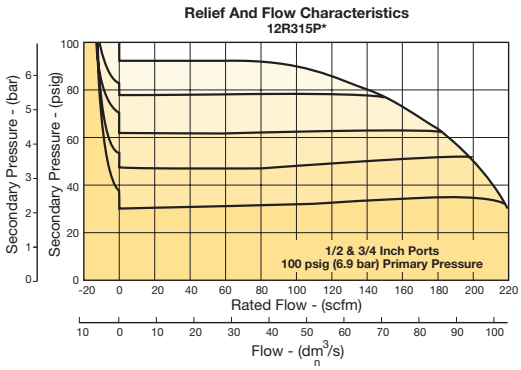

⚠ WARNING

Product rupture can cause serious injury.
Do not connect regulator to bottled gas.
Do not exceed Maximum primary pressure rating.

Parker Hannifin Corporation
Pneumatic Division
Richland, Michigan
www.parker.com/pneumatics

Tel: +45 63 12 83 00 | Email: ps@hymatik.com | www.hymatik.com | Hvidkaervej 27a, DK-5250 Odense SV, Denmark

P3NR Pilot Controlled Regulator - Hi-Flow

- Port blocks (PB) available to provide 1-1/2" port extension to 1" ported bodies
- Self relieving feature plus balanced poppet provides quick response and accurate pressure regulation
- Solid control piston for extended life
- 3/4", 1" 1-1/2" ports (NPT, BSPP)

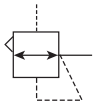



Port Size	Description	Part Number
3/4"	Without Gauge	**P3NRA96BPP**
1"	Without Gauge	**P3NRA98BPP**
1-1/2"#	Without Gauge	**P3NRA9PBPP**

1" port body with 1-1/2" port block.

Operating information

Supply pressure (max):		250 psig (17.2 bar)
Operating temperature:		32°F to 175°F (0°C to 80°C)
Flow capacity†:		
High flow	3/4"	300 scfm (141.6 dm³/s, ANR)
	1"	300 scfm (141.6 dm³/s, ANR)
	1-1/2"	350 scfm (165.2 dm³/s, ANR)
Gauge ports (2):		1/4 inch
Weight:	3/4", 1"	3.3 lb (1.5 kg)
	1-1/2" #	4.4 lb (2.0 kg)

† scfm = Standard cubic feet per minute at 100 psig inlet, 90 psig no flow secondary setting and 10 psig pressure drop.

1" port body with 1-1/2 port block

Ordering Information:

P3N	R	A	9	8	B	P	P

Engineering Level
Current A

Port Type
G Thread (BSPP) Female 1*
NPT Female 9
* 3/4 & 1 inch meets ISO 1179-1 standard.

Port Size
3/4" (w/o port blocks) 6
1" (w/o port blocks) 8
1-1/2" Port Blocks (w/ 1" ported body) P

Relief
B Relieving

Adjustment
P Pilot Operated

Pressure Gauge
P Pilot Operator, Without Gauge

Note: BSPP ported units supplied using NPT ported bodies and BSPP port block kits.

☐ Most popular.

For inventory, lead times, and kit lookup, visit www.pdnplu.com

Parker Hannifin Corporation
Pneumatic Division
Richland, Michigan
www.parker.com/pneumatics

Tel: +45 63 12 83 00 | Email: ps@hymatik.com | www.hymatik.com | Hvidkaervej 27a, DK-5250 Odense SV, Denmark

Material Specifications

Adjusting stem	Steel
Body	Aluminum
Bonnet	Aluminum
Piston	Plastic
Poppet assembly	Brass
Seals	Nitrile
Springs – poppet	Steel

Repair and Service Kits

2" dial face 60 psig (0 to 4.1 bar), gauge	**K4520N14060**
2" dial face 160 psig (0 to 11.0 bar), gauge	**K4520N14160**
2" dial face 300 psig (0 to 20.7 bar), gauge	**K4520N14300**
1-3/4" digital round face 160 psig (0 70 11.0 bar), gauge	**K4517N14160D**
Mounting bracket kit*	**P3NKA00MW**
Relieving	**P3NKA00PD**

* If 1-1/2 BSPP E02 fittings are required, use P3NKA0BMW.

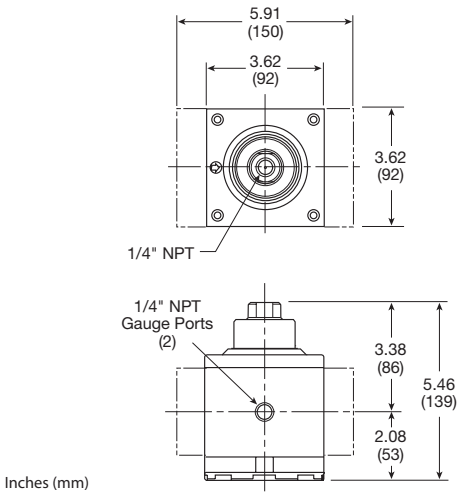

Inches (mm)

Flow Charts

3/4" Regulator

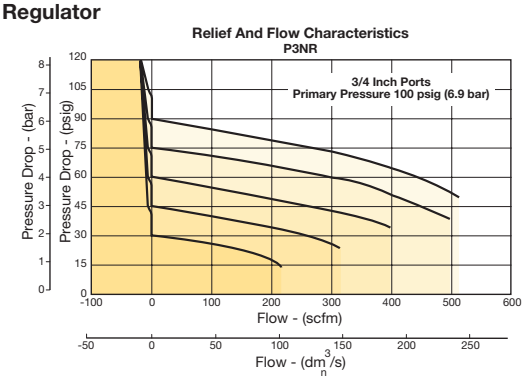

1" & 1-1/2" Regulator

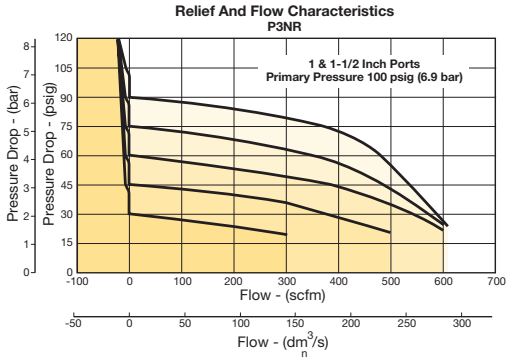

⚠ WARNING

Product rupture can cause serious injury.
Do not connect regulator to bottled gas.
Do not exceed Maximum primary pressure rating.

Parker Hannifin Corporation
Pneumatic Division
Richland, Michigan
www.parker.com/pneumatics

Tel: +45 63 12 83 00 | Email: ps@hymatik.com | www.hymatik.com | Hvidkaervej 27a, DK-5250 Odense SV, Denmark

R119 – Pilot Operated Regulators

- Adapted for control by a remote or distant small pilot regulator. Ideal for maximum capacity requirements in applications where units are not readily accessible
- High flow performance featuring rugged design for the most demanding applications
- Ideal for those installations calling for constant pressure with wide variation in flow
- Diaphragm operated design with balanced poppet and constant bleed pilot for quick and accurate regulation.
- Secondary aspiration plus balanced poppet provides quick response and accurate pressure regulation
- Reverse flow available
- 1/4", 3/8", 1/2" ports (NPT, BSPP)



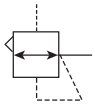

Port Size	Description (0-125 psig reduced pressure)	Part Number
1/4"	Without Gauge, Relieving, NPT	**R119-02J/M2**
3/8"	Without Gauge, Relieving, NPT	**R119-03J/M2**
1/2"	Without Gauge, Relieving, NPT	**R119-04J/M2**

Operating information

Supply pressure (max):		300 psig (0 to 20.7 bar)
Air consumption:		Constant bleed from air pilot chamber: approx. 0.17 scfm (10 scfh)
Operating temperature:		40°F to 125°F (4.4°C to 52°C)
Pilot pressure:		1/4", 3/8" thread - 1/8" 1/2" thread - 1/4"
Reduced pressure range:		Adjustable to within 5 to 7 psig (0.34 to 0.48 bar) of supply pressure
Flow capacity†:		
High flow	1/4"	100 scfm (47.2 dm^3/s, ANR)
	3/8"	110 scfm (51.9 dm^3/s, ANR)
	1/2"	150 scfm (70.8 dm^3/s, ANR)
Gauge ports (2):		1/4 inch
Weight:	1/4"	1.6 lb (0.73 kg)
	3/8"	1.6 lb (0.73 kg)
	1/2"	2.6 lb (1.18 kg)

† scfm = Standard cubic feet per minute at 100 psig inlet, 75 psig no flow secondary setting and 20 psig pressure drop.

Ordering Information:

R119 – 02 J [ ] /**

Port Threads	
NPT	–
BSPP	G

Port Size	
1/4 inch	02
3/8 inch	03
1/2 inch	04

Reduced Pressure Range	
Air Pilot Operated	J

Engineering Level	
/**	Will Be Entered at Factory

Options	
Blank	None
K	Non-Relieving
X64*	Fluorocarbon O-Rings and Diaphragm
X71	Non-Bleed (for use with electronic controllers)
X7	Brass Bottom Plug

* Brass bottom plug standard with X64 option.

☐ Most popular.

Tel: +45 63 12 83 00 | Email: ps@hymatik.com | www.hymatik.com | Hvidkaervej 27a, DK-5250 Odense SV, Denmark

Material Specifications

Body, ring, top plate	Zinc
Bottom plug	Nylon
Innervalve	Brass
Seals	Buna N

Repair and Service Kits

2" dial face 60 psig (0 to 4.1 bar), gauge	**K4520N14060**
2" dial face 160 psig (0 to 11.0 bar), gauge	**K4520N14160**
2" dial face 300 psig (0 to 20.7 bar), gauge	**K4520N14300**
1-3/4" digital round face 160 psig (0 to 11.0 bar), gauge	**K4517N14160D**
Non-relieving diaphragm, valve assembly (1/2")	**RK118X20A**
Non-relieving diaphragm, valve assembly (1/4", 3/8")	**RK118X20Y**
Relieving diaphragm, valve assembly (1/2")	**RK119X20A**
Relieving diaphragm, valve assembly (1/4", 3/8")	**RK119X20Y**

For fluorocarbon repair kits, add X64 to kit number suffix.
For non-bleed pilot repair kits, add X71 to kit number suffix.

R119-02J, R119-03J

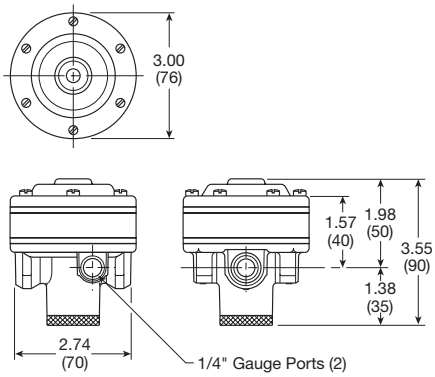

R119-04J

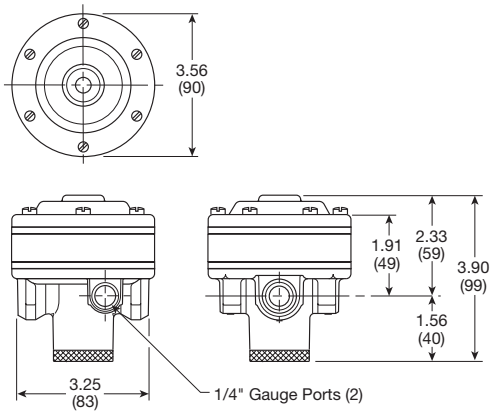

Inches (mm)

Flow Charts

1/4" Regulator

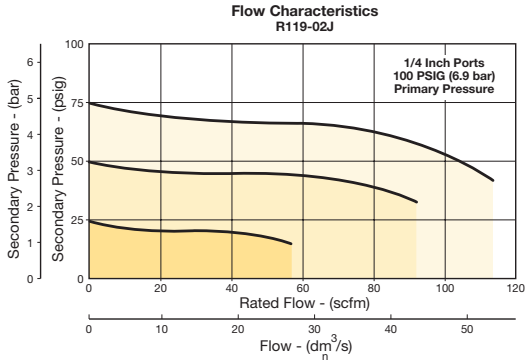

3/8" Regulator

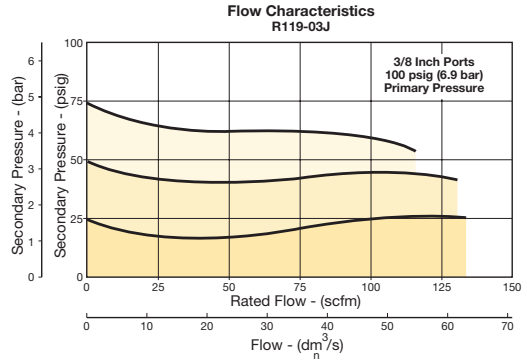

1/2" Regulator

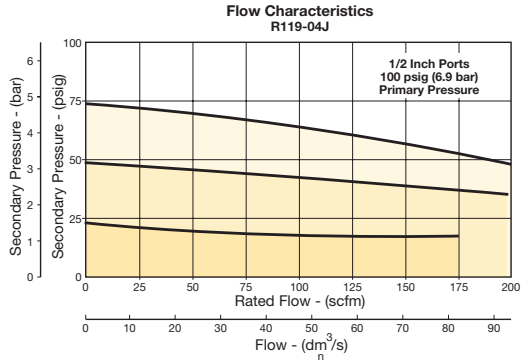

⚠ WARNING

Product rupture can cause serious injury.
Do not connect regulator to bottled gas.
Do not exceed Maximum primary pressure rating.

For inventory, lead times, and kit lookup, visit www.pdnplu.com

Parker Hannifin Corporation
Pneumatic Division
Richland, Michigan
www.parker.com/pneumatics

Tel: +45 63 12 83 00 | Email: ps@hymatik.com | www.hymatik.com | Hvidkaervej 27a, DK-5250 Odense SV, Denmark

R119 Pilot Operated Regulators - Hi-Flow

- Adapted for control by a remote or distant small pilot regulator. Ideal for maximum capacity requirements in applications where units are not readily accessible
- High flow performance featuring rugged design for the most demanding applications
- Ideal for those installations calling for constant pressure with wide variation in flow
- Diaphragm operated design with balanced poppet and constant bleed pilot for quick and accurate regulation
- Secondary aspiration plus balanced poppet provides quick response and accurate pressure regulation
- Reverse flow version available
- 3/4", 1", 1-1/2" ports (NPT, BSPP)



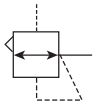

Port Size	Description (0-125 psig reduced pressure)	Part Number
3/4"	Without gauge, relieving, NPT	**R119-06J/M2**
1"	Without gauge, relieving, NPT	**R119-08J/M2**
1-1/2"	Without gauge, relieving, NPT	**R119-12J/M2**

Operating information

Supply pressure (max):		300 psig (0 to 20.7 bar)
Air consumption:		Constant bleed from air pilot chamber: approx. 0.17 scfm (10 scfh)
Operating temperature:		40°F to 125°F (4.4°C to 52°C)
Reduced pressure range:		Adjustable to within 5 to 7 psig (0.34 to 0.48 bar) of supply pressure
Flow capacity†:		
High flow	3/4"	300 scfm (141.6 dm³/s, ANR)
	1"	300 scfm (141.6 dm³/s, ANR)
	1-1/2"	500 scfm (236 dm³/s, ANR)
Gauge ports (2):		1/4 inch
Weight:	3/4"	5.2 lb (2.36 kg)
	1"	5.2 lb (2.36 kg)
	1-1/2"	5.6 lb (2.54 kg)

† scfm = Standard cubic feet per minute at 100 psig inlet, 75 psig no flow secondary setting and 20 psig pressure drop.

Ordering Information:

R119 – 06 J [ ] /**

Port Threads	
NPT	–
BSPP	G

Port Size	
3/4 inch	06
1 inch	08
1-1/2 inch	12

Reduced Pressure Range	
Air Pilot Operated	J

Engineering Level	
/**	Will Be Entered at Factory

Options	
Blank	None
K	Non-Relieving
X64*	Fluorocarbon O-Rings and Diaphragm
X71	Non-Bleed (for use with electronic controllers)
X80	Reverse Flow

* Brass bottom plug standard with X64 option.

☐ Most popular.

Parker Hannifin Corporation
Pneumatic Division
Richland, Michigan
www.parker.com/pneumatics

Tel: +45 63 12 83 00 | Email: ps@hymatik.com | www.hymatik.com | Hvidkaervej 27a, DK-5250 Odense SV, Denmark

Material Specifications

Body, ring, top plate	Zinc
Bottom plug, innervalve	Brass
Seals	Buna N

Repair and Service Kits

2" dial face 60 psig (0 to 4.1 bar), gauge	**K4520N14060**
2" dial face 160 psig (0 to 11.0 bar), gauge	**K4520N14160**
2" dial face 300 psig (0 to 20.7 bar), gauge	**K4520N14300**
1-3/4" digital round face 160 psig (0 to 11.0 bar), gauge	**K4517N14160D**
Non-relieving diaphragm, valve assembly (3/4", 1")	**RK118X20B**
Non-relieving diaphragm, valve assembly (1-1/4", 1-1/2")	**RK118X20D**
Relieving diaphragm, valve assembly (3/4", 1")	**RK119X20B**
Relieving diaphragm, valve assembly (1-1/4", 1-1/2")	**RK119X20D**

For Fluorocarbon Repair Kits, add X64 to Kit Number suffix.

R119-06J, R119-08J

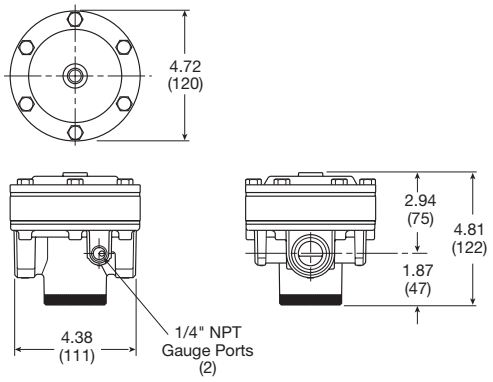

R119-12J

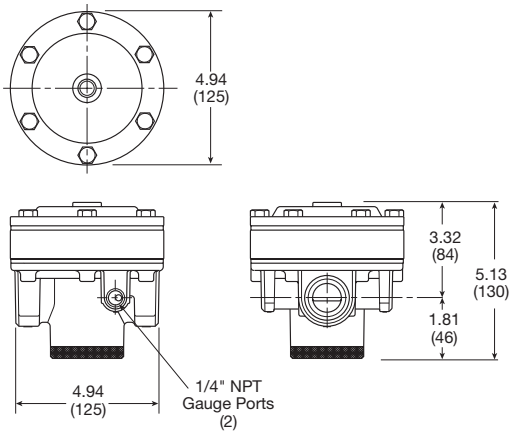

Inches (mm)

Flow Charts

3/4" Regulator

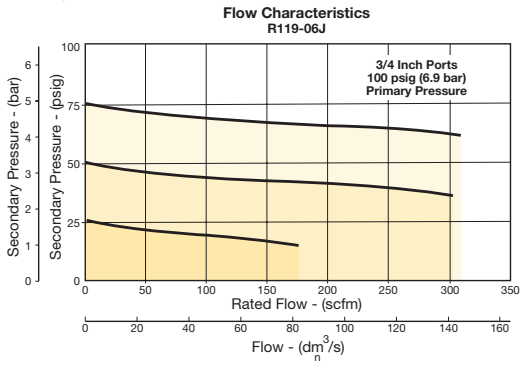

1" Regulator

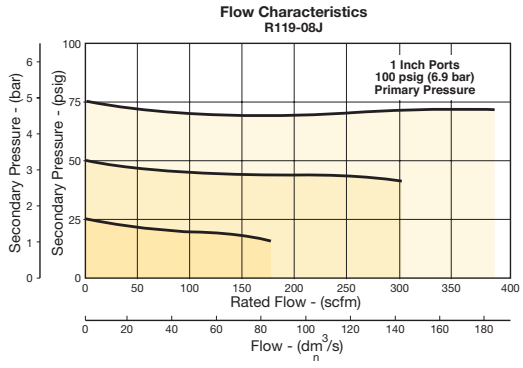

1-1/2" Regulator

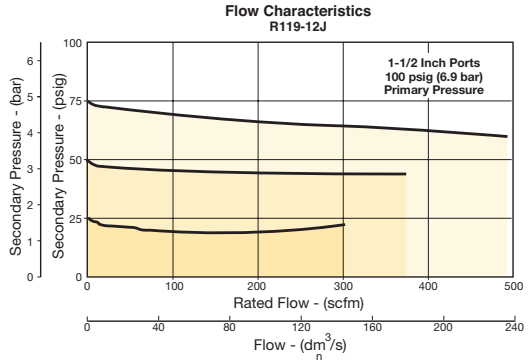

⚠ WARNING

Product rupture can cause serious injury.
Do not connect regulator to bottled gas.
Do not exceed Maximum primary pressure rating.

For inventory, lead times, and kit lookup, visit www.pdnplu.com

Parker Hannifin Corporation
Pneumatic Division
Richland, Michigan
www.parker.com/pneumatics

Tel: +45 63 12 83 00 | Email: ps@hymatik.com | www.hymatik.com | Hvidkaervej 27a, DK-5250 Odense SV, Denmark

R119 Pilot Operated Regulators - Hi-Flow

- Adapted for control by a remote or distant small pilot regulator. Ideal for maximum capacity requirements in applications where units are not readily accessible
- High flow performance featuring rugged design for the most demanding applications
- Ideal for those installations calling for constant pressure with wide variation in flow
- Piston operated design with balanced poppet and dual constant bleed for quick and accurate regulation
- 2", 2-1/2" ports (NPT, BSPP)



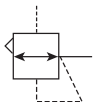

Port Size	Description (0-125 psig reduced pressure)	Part Number
2"	Without Gauge, Relieving, NPT	**R119-16J**
2-1/2"	Without Gauge, Relieving, NPT	**R119-20J**

Operating information

Supply pressure (max):		300 psig (0 to 20.7 bar)
Air consumption:		
Constant bleed from		Air pilot chamber: approx. 0.17 scfm (10 scfh)
		Reduced pressure: approx. 0.17 scfm (10 scfh)
Operating temperature:		40°F to 120°F (4.4°C to 48.9°C)
Reduced pressure range:		Adjustable to within 5 to 7 psig (0.34 to 0.48 bar) of supply pressure
Flow capacity†:		
High flow	2"	1800 scfm (850 dm^3/s, ANR)
	2-1/2"	1800 scfm (850 dm^3/s, ANR)
Gauge ports (2):		
Can be used for full flow		1/4 inch
High pressure outlet for pilot		1/4 inch
Weight:		15 lb (6.8 kg)

† scfm = Standard cubic feet per minute at 100 psig inlet, 75 psig no flow secondary setting and 20 psig pressure drop.

Ordering Information:

R119 – 16 J

Port Threads	
NPT	–
BSPP	G

Port Size	
2 inch	16
2-1/2 inch	20

Reduced Pressure Range	
J	Air Pilot Operated

NOTE: Non-relieving not available.

☐ Most popular.

Tel: +45 63 12 83 00 | Email: ps@hymatik.com | www.hymatik.com | Hvidkaervej 27a, DK-5250 Odense SV, Denmark

Material Specifications

Body, piston	Aluminum
Seals	Buna N
Innervalve	Brass & stainless

Repair and Service Kits

2" dial face 60 psig (0 to 4.1 bar), gauge	**K4520N14060**
2" dial face 160 psig (0 to 11.0 bar), gauge	**K4520N14160**
2" dial face 300 psig (0 to 20.7 bar), gauge	**K4520N14300**
1-3/4" digital round face 160 psig (0 to 11.0 bar), gauge	**K4517N14160D**
Piston type regulation (2", 2-1/2")	**RK119G**

R119-16J, R119-20J

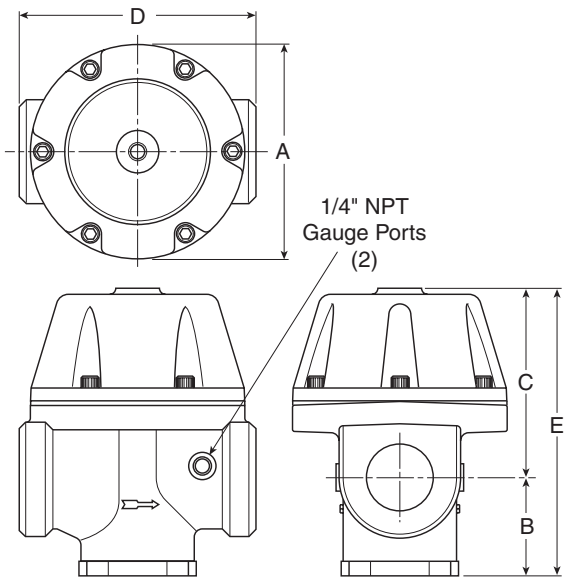

Flow Charts

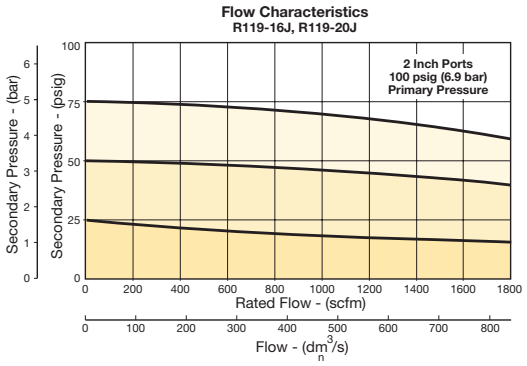

⚠ WARNING

Product rupture can cause serious injury.
Do not connect regulator to bottled gas.
Do not exceed Maximum primary pressure rating.

Tel: +45 63 12 83 00 | Email: ps@hymatik.com | www.hymatik.com | Hvidkaervej 27a, DK-5250 Odense SV, Denmark

P3Y Pilot Operated Regulator

- Integral 3/4" or 1" ports (BSPP & NPT)
- Pilot controlled regulators can be mounted "out of reach" with pilot regulator installed in a convenient location
- Constant pilot bleed control for accurate pressure control
- Balanced poppet provides quick response
- High flow



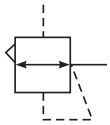

Port Size	Description	Part Number
3/4"	Pilot Operated Regulator	**P3YRA96BPPN**
1"	Pilot Operated Regulator	**P3YRA98BPPN**

Operating information

Supply pressure (max):		254 psig (17.5 bar)
Operating temperature:		-40°F to 140°F (-40°C to 60°C)
Flow capacity†:	3/4"	550 scfm (259.6 dm^3/s, ANR)
	1"	550 scfm (259.6 dm^3/s, ANR)
Fluid:		Compressed air
Weight:		2.6 lb (1.2 kg)

† Inlet pressure 145 psig (10 bar) inlet pressure, 91.4 psig (6.3 bar) set pressure and 7.3 psig (0.5 bar) pressure drop.

Ordering Information

P3YRA **9** **6** **BPPN**

Basic Series	
Pilot Operated Regulator	P3YRA

Thread Type*	
BSPP	1
NPT	9

Port Size	
3/4	6
1	8

*** Note:** For 1-1/2" ported unit, please order P3YKA*BCP port block kit separately.

☐ Most popular.

Tel: +45 63 12 83 00 | Email: ps@hymatik.com | www.hymatik.com | Hvidkaervej 27a, DK-5250 Odense SV, Denmark

Material specifications

Body	Aluminium
Body cover	ABS
Valve	Brass / NBR composite
Pilot valve booster	Aluminum
Seals	Nitrile NBR
Screws	Zinc plated steel

⚠ WARNING

Product rupture can cause serious injury.
Do not connect regulator to bottled gas.
Do not exceed Maximum primary pressure rating.

Flow characteristics

3/4" and 1" Pilot Regulator

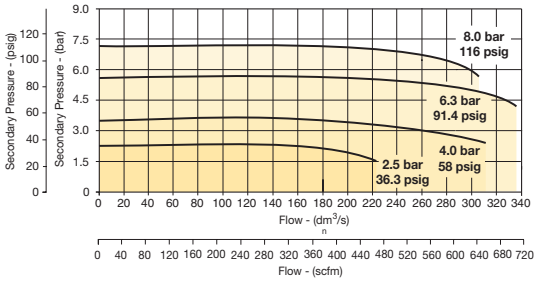

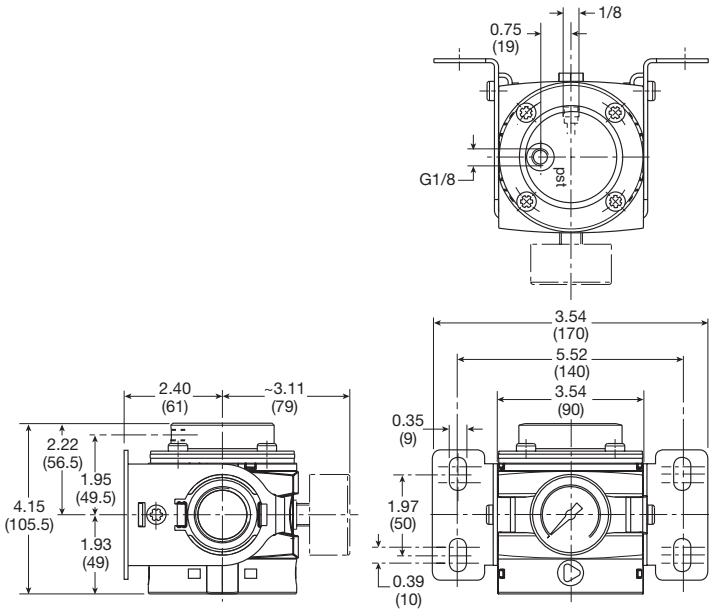

Inches (mm)

For inventory, lead times, and kit lookup, visit www.pdnplu.com

Parker Hannifin Corporation
Pneumatic Division
Richland, Michigan
www.parker.com/pneumatics

Tel: +45 63 12 83 00 | Email: ps@hymatik.com | www.hymatik.com | Hvidkaervej 27a, DK-5250 Odense SV, Denmark

P31P & P32P Proportional Regulators

- Very fast response times
- Accurate output pressure
- Parameter settings
- Selectable I/O parameters
- Quick, full flow exhaust
- LED display indicates output pressure
- No air consumption in steady state
- Multiple mounting options
- Protection to IP65



P31P Series
Bottom exhaust



P32P Series
Bottom exhaust

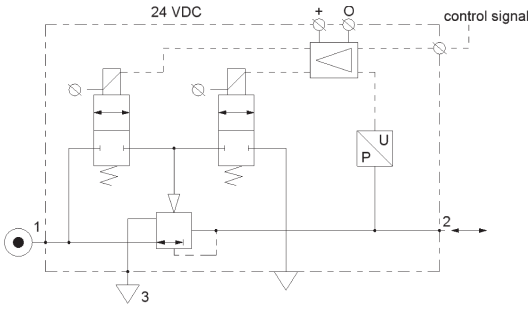

Port Size	Description	Part Number
1/4"	145 psig (0-10 bar), NC 0-10V	**P31PA92AD2VD1A**
1/2"	145 psig (0-10 bar), NC 0-10V	**P32PA92AD2VD1A**

Operating information

Flow capacity*:	P31P	40 scfm (19 dm³/s, ANR)
	P32P	120 scfm (57 dm³/s, ANR)
Temperature range:		32°F to 122°F (0°C to 50°C)
Supply pressure (max):		
2 bar unit		36.3 psig (2.5 bar)
10 bar unit		152 psig (10.5 bar)
Operating pressure (min):		P2 pressure + 7.3 psig (0.5 bar)
Working medium:		Compressed air or inert gasses, filtered to 40µ
Pressure range:		0 to 30 psig (0 to 2 bar) 0 to 145 psig (0 to 10 bar)
Weight:	P31P	0.64 lb (0.291 kg)
	P32P	1.42 lb (0.645 kg)

* Inlet pressure 91.3 psig (6.3 bar), inlet pressure and 4.9 psig (0.34 bar) pressure drop.

Ordering Information:

P31PA 9 2 A D 2 V D 1 A

Body Size

Global Modular Mini (1/4")	P31PA
Global Modular Compact (1/2")	P32PA

Thread Type

BSPP	1
BSPT	2
NPT	9

Port Size

Global Modular Mini (1/4")	2
Global Modular Compact (1/2")	4

Version

Bottom Ported Exhaust (NC)	A
Bottom Ported Forced Exhaust (NO)†	E

† When the supply voltage is lost the unit will automatically exhaust the regulated pressure to 0 bar (atmospheric pressure)

Pressure Range

Z	0 - 29 psig (0 - 2 bar)
D	0 - 145 psig (0 - 10 bar)

Power Supply

2	24 Volts

Control Signal

V	0-10V‡

‡ Factory setting is 0-10 V control signal. 4-20 mA control signal available via parameter 4 on keypad.

Input Connector

1	M12 (4-pin)

Output Signal

D	Digital, PNP
P	PNP or 0-10V
N	NPN or 0-10V
M	4-20mA Fixed

D) Digital PNP output only, no analog output selectable
P) Digital PNP and analogue 0-10V outputs selectable, by means of parameter 6. (Factory default 0-10V)
N) Digital NPN and analog 0-10 V outputs selectable by means of parameter 6. Factory default 0-10V)
M) Analog 4-20mA output only.
Note: On all analog outputs the F.S. value can be adjusted by means of parameter 8.

☐ Most popular.

Parker Hannifin Corporation
Pneumatic Division
Richland, Michigan
www.parker.com/pneumatics

Tel: +45 63 12 83 00 | Email: ps@hymatik.com | www.hymatik.com | Hvidkaervej 27a, DK-5250 Odense SV, Denmark

Technical Information

Accuracy
+/- 1.0% of F.S.*

* Full scale (F.S.) - For 2 bar (29 psig) versions this will be 2 bar (29 psig), for the 10 bar (145 psig) version full scale will be 10 bar (145 psig).

Air consumption
No consumption in stable regulated situation.

Display
The regulator is provided with a digital display, indicating the output pressure, either in bar or psig.

The factory setting is as indicated on the label, can be changed through to software at all times (parameter 14)

Supply voltage
24 VDC +/- 10%

Power consumption
Max. 1.1W with unloaded signal outputs

Control signals
The electronic pressure regulator can be externally controlled through an analogue control signal of either 0-10V or 4-20mA. (parameter 4).

Output signals
As soon as the output pressure is within the signal band a signal is given of 24VDC, PNP Ri = 1 kOhm
Outside the signal band this connection is 0V.

Connections
(In case of output signal (Option D)
Central M12 connector 4-pole
The electrical connections are as follows:

Pin No.		Function	Color
1	24 V	Supply	Brown
2	0 to 10 V	Control Signal Ri = 100k Ω	White
	4 to 20mA	Control Signal Ri = 500 Ω	
3	0 V (GND)	Supply & Set Point Ground	Blue
4	24 V	Alarm Output Signal	Black

Flow Charts

P31P Regulator 1/4" Ports

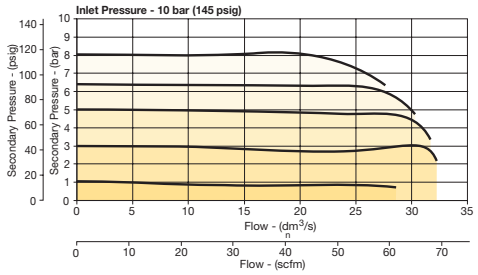

P32P Regulator 1/2" Ports

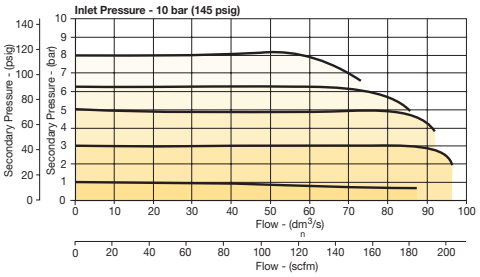

Degree of protection: IP65

EU conformity
CE: standard
EMC: according to directive 89/336/EEC
This pressure regulator is in accordance with:

EN 61000-6-1:2001 **EN 61000-6-2:2001**
EN 61000-6-3:2001 **EN 61000-6-4:2001**

Mounting position
Preferably vertical, with the cable gland on top.

Materials: P31P & P32P

Magnet core	Steel
Solenoid valve poppet	FPM
Solenoid valve housing	Techno polymer
Regulator body (P31P & P32P versions)	Aluminum
Regulator top housing	Nylon
Valve head	Brass & NBR
Remaining seals	NBR

Tel: +45 63 12 83 00 | Email: ps@hymatik.com | www.hymatik.com | Hvidkaervej 27a, DK-5250 Odense SV, Denmark

How to change parameters – How to Videos available at www.parker.com/pneu/propreg

Pressing the Accept key "acc" for more than 3 seconds, will activate parameter change mode. The user can then select the parameters by pressing up or down key (display will show Pxx). When parameter number is correct, pressing accept again will enter parameter number (display will show parameter value).

Pressing the up or down key will change the parameter itself (display will flash indicating parameter editing mode). Pressing the accept key will accept the new parameter value (all digits will flash whilst being accepted).

After releasing all keys, the next parameter number will be presented on the display (you may step to the next parameter). When no key is pressed, after 3 seconds the display will show the actual output pressure.

When the unit is initially powered up allow approximately 10 seconds for the unit to "boot-up" before changing parameter settings.

Only parameter numbers 0, 4, 6, 8, 9, 14, 18, 19, 20, 12, 13 and 21 are accessible to edit. All other parameters are fixed.

Manual mode:
When keys DOWN and UP are pressed during startup, (connecting to the 24V power supply) manual mode is activated. This means that the user is able to in/decrease the output pressure of the regulator, by pressing the UP or DOWN key. During this action the display will blink, indicating that the manual mode is activated. After powering up again, the unit will revert back to normal mode.

Back to Factory Setting

After start up. (Power is on)
Entering this value in parameter 0 will store the calibrated factory data into the working parameters.
(Default calibration data is used)

Parameter Number 0 – Reset Back to Factory Settings

Step	1	2	3	4	5	
Press	acc 3-6 seconds	▼ or ▲	acc	▼ or ▲	acc	
Until Display Reads	Pxx	P00	000. Flashing Decimal	003. Flashing Decimal	003 Flashing	P01
Description	Accesses changeable parameters.	Accesses parameter no. 0.	Displays current parameter value.	Edits parameter. 3 = standard factory settings. If other than 3, use Up or Down Arrow and accept 3	Accepts and saves new parameter setting.	Sequences to next parameter.

Set Control Signal

The unit is factory set for 0-10 V control signal. If 4-20 mA control signal is required, change parameter 4.

Parameter Number 4 – Set Control Signal in Volts or Milliamps

Step	1	2	3	4	5	
Press	acc 3-6 seconds	▼ or ▲	acc	▼ or ▲	acc	
Until Display Reads	Pxx	P04	001. Flashing Decimal	000. Flashing Decimal	000 Flashing	P05
Description	Accesses changeable parameters.	Accesses parameter no. 4.	Displays current parameter value. 1 = V 0 = mA	Edits parameter.	Accepts and saves new parameter setting.	Sequences to next parameter.

How to Videos at www.parker.com/pneu/propreg

For inventory, lead times, and kit lookup, visit www.pdnplu.com

Parker Hannifin Corporation
Pneumatic Division
Richland, Michigan
www.parker.com/pneumatics

Tel: +45 63 12 83 00 | Email: ps@hymatik.com | www.hymatik.com | Hvidkaervej 27a, DK-5250 Odense SV, Denmark

Set Output Signal

Parameter 6 is used to set the type of output signal to your PLC.
This parameter is used as follows:

Output Signal option "0" = Digital Output – PNP
- Factory set at "0" Non Adjustable

Output Signal option "P" = Digital PNP or Analog 1-10V
- Factory set at "1" for Analog Signal
- Convert to Digital PNP by changing parameter to "0" setting

Output Signal option "N" = Digital NPN or Analog 1-10V
- Factory set at "1" Analog Signal
- Convert to Digital NPN by changing parameter to "0"

Output Signal option "M" = Analog 4-20 mA
- Factory set at "2" Non Adjustable

Parameter Number 6 – Set Output Signal

Step	1	2	3	4	5	
Press	acc 3-6 seconds	▼ or ▲	acc	▼ or ▲	acc	
Until Display Reads	Pxx	P06	001. Flashing Decimal	###. Flashing Decimal (Value 0, 1 or 2)	###. Flashing	P07
Description	Accesses changeable parameters.	Accesses parameter no. 6.	Displays current parameter value. 1 = m factory default for P3H with analog options	Edits parameter. 0 = digital (NPN or PNP) 1 = analog 0..10V 2 = analog 4..20 mA	Accepts and saves new parameter setting.	Sequences to next parameter.

Adjust Span Analog Output Signal

Set value is a % of Full Analog range. As an example for a 0-10V output signal, the original factory setting of 100% will give you an adjustment of 0-10V. If you reset Parameter 8 to 50%, the new output range would be 0-5V or 50% of the full range.

In the event that the output signal is to low, in a certain application, you can adjust it by increasing Parameter 8 to a maximum value of 130% of scale.

Note that all values are nominal and that an actual measurement may be required to ensure signal strength.

Parameter Number 8 – Adjust Span Analog Output Signal

Step	1	2	3	4	5	
Press	acc 3-6 seconds	▼ or ▲	acc	▼ or ▲	acc	
Until Display Reads	Pxx	P08	100. Flashing Decimal (For 2 bar versions value = 92)	###. Flashing Decimal (Value between 0 and 130)	###. Flashing	P09
Description	Accesses changeable parameters.	Accesses parameter no. 8.	Displays current parameter value.	Edits parameter.	Accepts and saves new parameter setting and implements the new analog signal span.	Sequences to next parameter.

How to Videos at www.parker.com/pneu/propreg

For inventory, lead times, and kit lookup, visit www.pdnplu.com

Parker Hannifin Corporation
Pneumatic Division
Richland, Michigan
www.parker.com/pneumatics

Adjust Digital Display

If necessary, adjustments can be made to the digital display when using an external pressure sensor.

Parameter Number 9 – Adjust Digital Display Value (Pressure Calibration)

Step	1	2	3	4	5	
Press	acc 3-6 seconds	▼ or ▲	acc	▼ or ▲	acc	
Until Display Reads	Pxx	P09	###. Flashing Decimal	###. Flashing Decimal	### Flashing	P 10
Description	Accesses changeable parameters.	Accesses parameter no. 9.	Displays current digital display	Use up or down arrows and accept to adjust the display value if using an external pressure sensor.	Accepts and saves new parameter setting.	Sequences to next parameter.

Set Pressure Scale

Units with NPT port threads are supplied with a factory set psig pressure scale. Use parameter 14 to change scale to bar.

Parameter Number 14 – Set Pressure Scale in psig or bar

Step	1	2	3	4	5	
Press	acc 3-6 seconds	▼ or ▲	acc	▼ or ▲	acc	
Until Display Reads	Pxx	P 14	001. Flashing Decimal	000. Flashing Decimal	000 Flashing	P 15
Description	Accesses changeable parameters.	Accesses parameter no. 14.	Displays current parameter value. 1 = psig 0 = bar 2 = MPa	Edits parameter.	Accepts and saves new parameter setting.	Sequences to next parameter.

How to Videos at www.parker.com/pneu/propreg

For inventory, lead times, and kit lookup, visit www.pdnplu.com

Parker Hannifin Corporation
Pneumatic Division
Richland, Michigan
www.parker.com/pneumatics

Preset Minimum Pressure

If there is a need for a pre-set Minimum pressure, use parameter 18. (Note: preset pressure is affected by % P19.)

Parameter Number 18 – Set Minimum Preset Pressure

Step	1	2	3	4	5	
Press	acc 3-6 seconds	▼ or ▲	acc	▼ or ▲	acc	
Until Display Reads	Pxx	P 18	000. Flashing Decimal	# # #. Flashing Decimal (value between 0 and 200)	# # # Flashing	P 19
Description	Accesses changeable parameters.	Accesses parameter no. 18.	Displays current parameter value. Incremental value is: 2 bar unit: x 2 mbar x % P19 10 bar unit: x 10 mbar x % P19	Edits parameter.	Accepts and saves new parameter setting.	Sequences to next parameter.

Set Pressure Correction

Pressure correction allows the user to set a Maximum pressure as a percentage of secondary pressure F.S.

Example: If F.S. is 10 bar, set parameter 19 to 50 for Maximum preset pressure of 5 bar.

Pressure correction also affects the Minimum preset pressure in parameter 18.

Example: If F.S. is 10 bar and parameter 18 is set to a value of 100 (1 bar), and parameter 19 is set to 50%, then the actual Minimum preset pressure seen is 0.5 bar.

Parameter Number 19 – Set Maximum Preset Pressure

Step	1	2	3	4	5	
Press	acc 3-6 seconds	▼ or ▲	acc	▼ or ▲	acc	
Until Display Reads	Pxx	P 19	100. Flashing Decimal	# # #. Flashing Decimal (value between 0 and 100)	# # # Flashing	P20
Description	Accesses changeable parameters.	Accesses parameter no. 19.	Displays current parameter value. Incremental value is: % of F.S.	Edits parameter.	Accepts and saves new parameter setting.	Sequences to next parameter.

How to Videos at www.parker.com/pneu/propreg

For inventory, lead times, and kit lookup, visit www.pdnplu.com

Parker Hannifin Corporation
Pneumatic Division
Richland, Michigan
www.parker.com/pneumatics

Tel: +45 63 12 83 00 | Email: ps@hymatik.com | www.hymatik.com | Hvidkaervej 27a, DK-5250 Odense SV, Denmark

Behavior Control

The regulation speed of the pressure regulator can be modified by means of one parameter. (P 20)
The value in this parameter has a range from 0-5. A higher value indicates slower regulation speed, but will be more stable.

Parameter Number 20 – Set Behavior Control

Step	1	2	3	4	5	
Press	acc 3-6 seconds	▼ or ▲	acc	▼ or ▲	acc	
Until Display Reads	Pxx	P20	003.	###. Flashing Decimal (value between 0 and 5)	### Flashing	P21
Description	Accesses changeable parameters.	Accesses parameter no. 20.	Displays current parameter value.	Edits parameter 0 = custom set* 1 = fastest (narrow proportional band) 2 = fast 3 = normal 4 = slow 5 = slowest (proportional band is broad)	Accepts and saves new parameter setting.	Sequences to next parameter.

* When the value 0 is entered, you are able to create your own custom settings true parameters 12, 13 and 21.

Fine Settings
Set Proportional Band

Proportional band is used for setting the reaction sensitivity of the regulator. The displayed value is X 10 mbar and has a range between 50 (0.5 bar) and 250 (2.5 bar).

Parameter Number 12 – Set Proportional Band (P20 Must be Set to 0)

Step	1	2	3	4	5	
Press	acc 3-6 seconds	▼ or ▲	acc	▼ or ▲	acc	
Until Display Reads	Pxx	P12	100. Flashing Decimal	###. Flashing Decimal (value between 50 and 250)	### Flashing	P13
Description	Accesses changeable parameters.	Accesses parameter no. 12.	Displays current parameter value. Incremental value is: x 10 mbar	Edits parameter.	Accepts and saves new parameter setting.	Sequences to next parameter.

How to Videos at www.parker.com/pneu/propreg

For inventory, lead times, and kit lookup, visit www.pdnplu.com

Parker Hannifin Corporation
Pneumatic Division
Richland, Michigan
www.parker.com/pneumatics

Tel: +45 63 12 83 00 | Email: ps@hymatik.com | www.hymatik.com | Hvidkaervej 27a, DK-5250 Odense SV, Denmark

Set Deadband

Deadband is the Minimum limit of accuracy at which the regulator is set for normal operation. The displayed value is X 10 mbar and has a range between 4 (40 mbar) and 40 (400 mbar).

Parameter Number 13 – Set Deadband (P20 Must be Set to 0)

Step	1	2	3	4	5	
Press	acc 3-6 seconds	▼ or ▲	acc	▼ or ▲	acc	
Until Display Reads	Pxx	P 13	0 15. Flashing Decimal	# # #. Flashing Decimal (value between 4 and 40)	# # # Flashing	P 14
Description	Accesses changeable parameters.	Accesses parameter no. 13.	Displays current parameter value. Incremental value is x 10 mbar	Edits parameter.	Accepts and saves new parameter setting.	Sequences to next parameter.

Proportional Effect

Parameter Number 21 – Set Proportional Effect (P20 Must be Set to 0)

Step	1	2	3	4	5	
Press	acc 3-6 seconds	▼ or ▲	acc	▼ or ▲	acc	
Until Display Reads	Pxx	P21	0 10. Flashing Decimal	# # #. Flashing Decimal (value between 5 and 100)	# # # Flashing	P22
Description	Accesses changeable parameters.	Accesses parameter no. 21.	Displays current parameter value.	Edits parameter. 5 = fastest regulation 100 = slowest regulation.	Accepts and saves new parameter setting.	Sequences to next parameter.

Parameter Number 39 – Displays Current Software Version

Step	1	2	3
Press	acc 3-6 seconds	▼ or ▲	acc
Until Display Reads	Pxx	P39	# # # Flashing Decimal
Description	Accesses changeable parameters.	Accesses parameter no. 39.	Displays current parameter value. XXX = current software version

How to Videos at www.parker.com/pneu/propreg

For inventory, lead times, and kit lookup, visit www.pdnplu.com

Parker Hannifin Corporation
Pneumatic Division
Richland, Michigan
www.parker.com/pneumatics

P31P

Dimensions inches (mm)

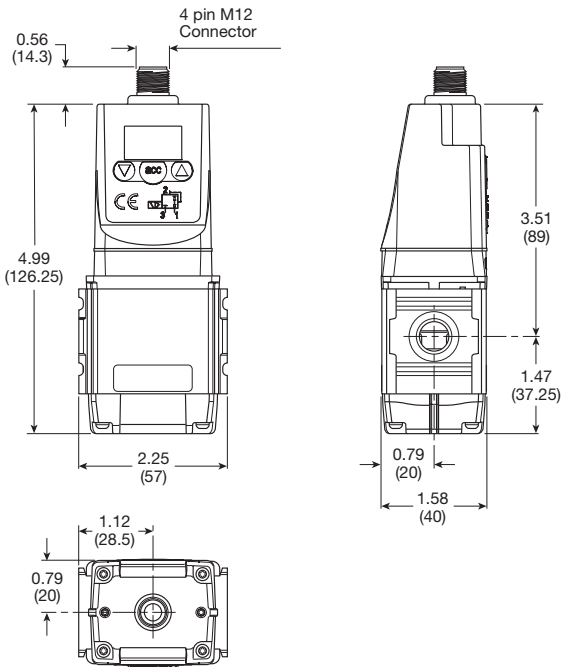

L-Bracket

P3HKA00ML

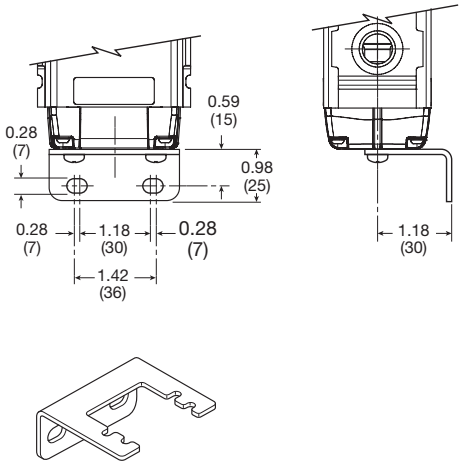

Foot Bracket

P3HKA00MC

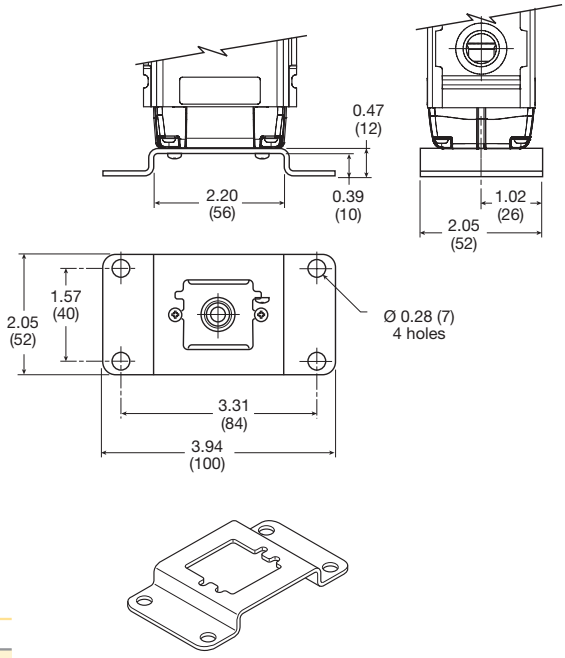

Cables

Description	Part Number
2 mtr. cable with moulded straight M12x1 connector	**CB-M12-4P-2M**

☐ Most popular.

For inventory, lead times, and kit lookup, visit www.pdnplu.com

Parker Hannifin Corporation
Pneumatic Division
Richland, Michigan
www.parker.com/pneumatics

P32P

Dimensions inches (mm)

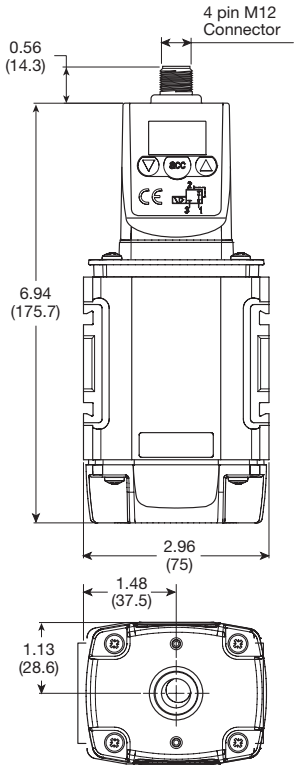

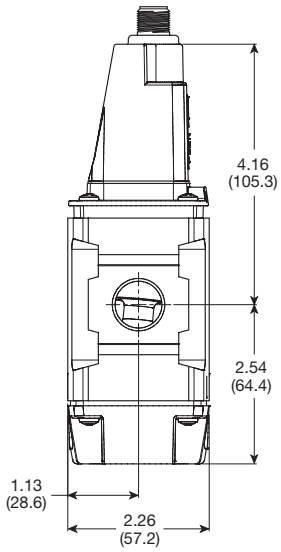

L-Bracket

P3KKA00ML

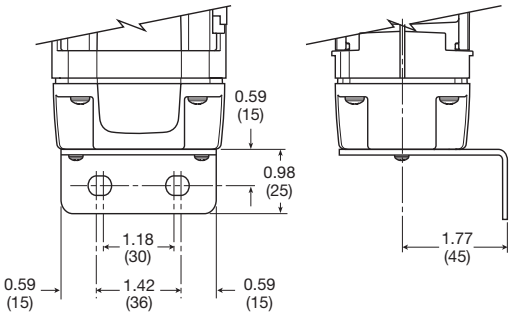

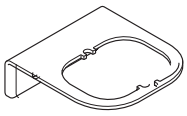

Foot Bracket

P3KKA00MC

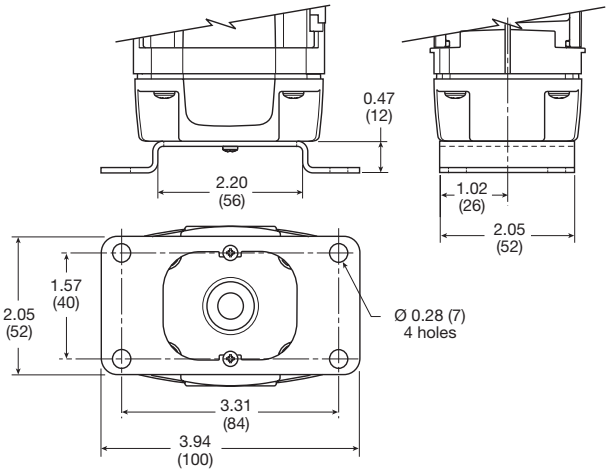

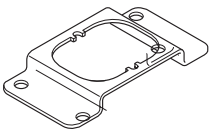

Cables

Description	Part Number
2 mtr. cable with moulded straight M12x1 connector	**CB-M12-4P-2M**

Most popular.

For inventory, lead times, and kit lookup, visit www.pdnplu.com

Parker Hannifin Corporation
Pneumatic Division
Richland, Michigan
www.parker.com/pneumatics

PAR™-15 Programmable Air Regulating Valve

PAR™-15 is a unique 3-Way, programmable, air regulating valve that functions as a precise, high-flow, multi-purpose regulator.

Signals from a computer, programmable controllers or from simple electrical switches, fed to the valve's four solenoids, control the division of a single inlet pressure into any one of fifteen equally spaced output pressures.

The valve's response is instant and repeatable, reducing the need for expensive feedback controls.

It goes far beyond the capabilities of conventional controls by providing a limitless range of application possibilities including cylinder pressure/stroke control, clamping, retracting, approach, flow, and impact.

PAR™-15 eliminates shock absorbers, increases tool life, saves air, and reduces workpiece damage.

- Full flow capacity for direct air device operation.
- Quick, full flow exhaust.
- Instantly repeatable response.
- Air saving design, close crossover, non-constant bleed.
- Wide range of discrete output pressures.
- Normally closed or normally open operators.
- Compatible with computers and programmable controllers with digital solid state relay outputs.
- Meets NEMA 4 standard (6-Pin option only).

Life Expectancy

Normal multi-million cycle life expectancy of these valves is based on the use of properly filtered air at room temperature.



No Enclosure



NEMA 4 Enclosure – 6-Pin Connector

Operating information

Pressure range:	
Inlet (max)	150 psig (1035 kPa)
Output (min)	6 psig (41 kPa)
Temperature range (ambient)†:	32°F to 140°F (0°C to 60°C)
Voltage range:	+10% to –10% of rating
Flow capacity:	
Inlet to outlet	275 scfm (129.8 dm^3/s, ANR)
Outlet to exhaust	225 scfm (106.2 dm^3/s, ANR)
Output response:	20 milliseconds
Weight:	
Without enclosure	6.3 lb (2.9 kg)
With 6-pin & cord	8.0 lb (3.6 kg)

⚠ † **Caution: If it is possible that the ambient temperature may fall below freezing, the media must be moisture free to prevent internal damage or unpredictable behavior.**

Port Size			Solenoid Operated – Normally Closed – Internal Pilot*		
			No Enclosure	NEMA 4 Enclosure - 6-Pin Connector	
Body	Pilot	Voltage/Cycle		Quadrant 2 †	Quadrant 4 †
1/2"	1/8"	24V/60Hz	**W21540172B**	**W21542172B**	**W21544172B**
1/2"	1/8"	12VDC	**W21540175B**	**W21542175B**	**W21544175B**
1/2"	1/8"	24VDC	**W21540179B**	**W21542179B**	**W21544179B**
1/2"	1/8"	110/120V / 50/60Hz	**W21540183B**	**W21542183B**	**W21544183B**

*** Normally open and external pilot options also available.**

† Theoretically Quadrant 1 is defined as the 6-Pin connector on the same face with the inlet port. Looking from the top down and rotating the enclosure clockwise 90° you get Quadrant 2 or 270° for Quadrant 4.

Material Specifications

Body, Bottom and Top Plates	Aluminum
Divider	Aluminum
Piston	Acetal
Poppet	Aluminum
Poppet guide	Aluminum
Poppet seal	Fluorocarbon
Seals	Nitrile
Spring	Stainless steel

☐ Most popular.

Lubrication

Although the valve does not require lubrication for a normal service life, use of SAE 10 mineral base oil is recommended to extend component life. This should be supplied using a 1/2 inch full flow lubricator located upstream of the valve inlet port.

CAUTION:
DO NOT USE SYNTHETIC, RECONSTITUTED, OR OILS WITH AN ALCOHOL CONTENT.

Wiring

Follow all national and local electrical codes.

For inventory, lead times, and kit lookup, visit www.pdnplu.com

Parker Hannifin Corporation
Pneumatic Division
Richland, Michigan
www.parker.com/pneumatics

Tel: +45 63 12 83 00 | Email: ps@hymatik.com | www.hymatik.com | Hvidkaervej 27a, DK-5250 Odense SV, Denmark

Ordering Information:

W21 5 4 2 1 83 L B

Basic Series	
PAR™-15 Version 2.0	W21

Actuation	
Solenoid Operated	5

Port Size / Thread Type	
1/2" NPT	4

Voltage	
72	24V/60 Hz
75	12VDC
79	24VDC
83	120/110V 60/50 Hz

Solenoid Type / Pilot Source	
1	Normally Closed / Internal Pilot
3	Normally Closed / External Pilot
5	Normally Open / Internal Pilot
7	Normally Open / External Pilot

Label / Temp Option	
Blank	Standard Temperatures

Engineering Level	
B	Current

Enclosure / Connector Quadrant			
No Enclosure	0	Nema 4 Enclosure with 6-pin Micro Connector at Quadrant 4, Cord Included	F
Metal Enclosure with 7/8" Conduit Opening at Quadrant 2	1	Nema 4 Enclosure with 6-pin Micro Connector at Quadrant 2, No Cord	G
Nema 4 Enclosure with 6-pin Mini Connector Quadrant 2, Cord Included	2	Nema 4 Enclosure with 6-pin Micro Connector at Quadrant 4, No Cord	H
Metal Enclosure with 7/8" Conduit Opening at Quadrant 4	3	Lighted Enclosure with 6-pin Micro Connector at Quadrant 2, Cord Included	K*
Nema 4 Enclosure with 6-pin Mini Connector Quadrant 4, Cord Included	4	Lighted Enclosure with 6-pin Micro Connector at Quadrant 2, No Cord	L*
Nema 4 Enclosure with 6-pin Mini Connector Quadrant 2, No Cord	5	Lighted Enclosure with 6-pin Mini Connector at Quadrant 4, Cord Included	M*
Nema 4 Enclosure with 6-pin Mini Connector Quadrant 4, No Cord	6	Lighted Enclosure with 6-pin Mini Connector at Quadrant 4, No Cord	N*
Lighted Enclosure with 6-pin Mini Connector at Quadrant 2, Cord Included	B*	Lighted Enclosure with 6-pin Micro Connector at Quadrant 4, Cord Included	P*
Lighted Enclosure with 6-pin Mini Connector at Quadrant 2, No Cord	C*	Lighted Enclosure with 6-pin Micro Connector at Quadrant 4, No Cord	Q*
Nema 4 Enclosure with 6-pin Micro Connector at Quadrant 2, Cord Included	E		

Theoretically, Quadrant 1 is defined as the 6-Pin Connector on the same face with the inlet port. Looking from the top down and rotating the enclosure clockwise 90° you get Quadrant 2 or 270° for Quadrant 4.

* Available in 24VDC and 120VAC Only. Not NEMA 4 rated.

Electropneumatic System

A conventional system is usually composed by several electronic and pneumatic components as shown on the schematic. The cylinder which is moving a load is operated with a pilot valve which receives the instructions from an electropneumatic transducer. The transducer converts electronic signals to pneumatic signals. These electronic signals are usually of an analog type, but controllers/computer microprocessors send digital signals as outputs, therefore, a digital to analog signal converter is required.

The simplified schematic with the PARTM-15 is reduced to fewer components since the PARTM-15 takes the place of the digital to analog converter, the electropneumatic transducer, and the pilot valve. The benefits being fewer components, and less maintenance and downtime.

Conventional

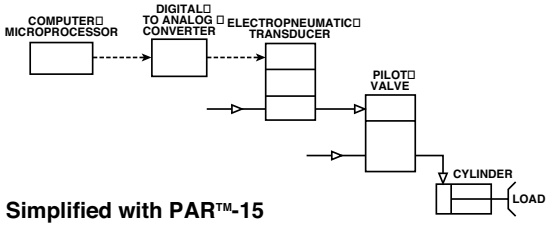

Simplified with PAR™-15

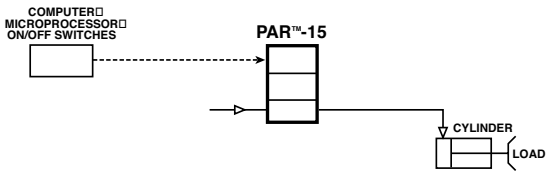

Parker Hannifin Corporation
Pneumatic Division
Richland, Michigan
www.parker.com/pneumatics

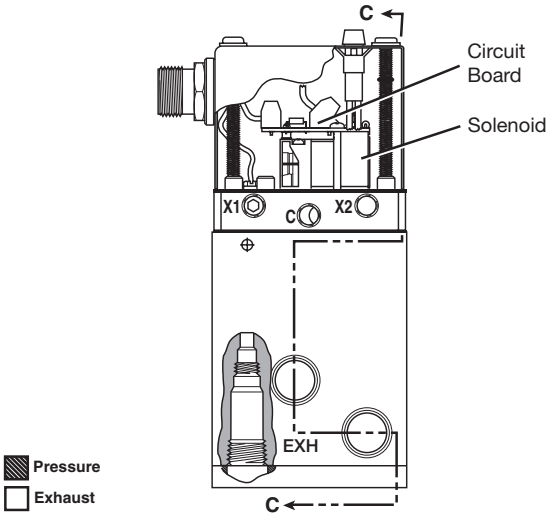

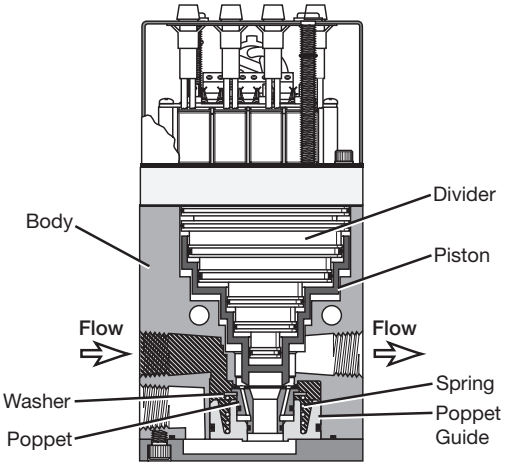

Section C-C

Application

Pneumatic systems operating under multiple pressures, and requiring almost instantaneous pressure changes are good application cases for the PAR™-15. Usually the more pressures needed for a particular operation, the easier it is to justify the valve, since it will take the place of several pneumatic regulators and selector valves.

Among the most common applications are brakes and clutches, painting, printing feeds and tension, robotics, and spot welding.

Other Applications:

- Air Chucks
- Air Cylinder Control
- Air Winches
- Blow Molding Control
- Contact Force Control
- Conveyor Control
- Die Cushioning
- Dynamic Braking
- Fuel Control
- Hopper Control
- Robot Gripper Control
- Valve Positioning
- Variable Clamping
- Variable Pressure Processing
- Torque Control
- Wire Tensioning

Operation

Four solenoids are controlled by on/off signals that selectively divide any input pressure into any one of 15 equally spaced pressures plus zero. See the truth table.

Full flow exhaust permits instant reduction to any lower selected pressure or zero. High relief capacity quickly vents downstream overpressure. The output pressure will begin to change within 20 milliseconds after a change in the electrical input to one or more of the solenoids. However, the time which elapses until the output pressure reaches the new level will depend upon the volume of air, the size of the connection from the PAR™-15 valve and the magnitude of the pressure change.

A small regulator may be used to feed the external pilot port X1 on units with normally closed solenoid operators or X2 on units with normally open solenoid operators. The PAR™-15 valve will then divide this pressure independent of mainline supply pressure so long as the pilot regulator is set to a pressure below the mainline supply pressure. A regulated external supply will eliminate the effects of fluctuating mainline pressures. (NOTE: A regulator placed upstream of the inlet also eliminates the effects of fluctuating pressures).

The PAR™-15 is available with two types of output pressure regulation: increasing output and decreasing output. In the increasing output pressure regulation type, normally closed solenoid operators are used to divide the input pressure into 15 equal steps, ranging from 0 PSIG (all solenoid operators de-energized) to full line pressure (all solenoid operators energized). With the decreasing output pressure regulation type, normally open solenoid operators are used to divide the input pressure into 15 equal steps, but starting with full line pressure (all solenoid operators de-energized) and ending with 0 PSIG (all solenoid operators energized).

Tel: +45 63 12 83 00 | Email: ps@hymatik.com | www.hymatik.com | Hvidkaervej 27a, DK-5250 Odense SV, Denmark

Truth Table

Normally Closed Valves / Solenoids	Normally Open Valves / Solenoids			
Binary Input * 8 4 2 1	Binary Input * 8 4 2 1			
Pin Number † 5 3 2 1	Pin Number † 5 3 2 1	Proportion of Inlet Pressure	PSIG Output@ 75 PSIG Inlet ††	PSIG Output@ 90 PSIG Inlet
0 0 0 0	1 1 1 1	0	0	0
0 0 0 1	1 1 1 0	1/15	5	6
0 0 1 0	1 1 0 1	2/15	10	12
0 0 1 1	1 1 0 0	3/15	15	18
0 1 0 0	1 0 1 1	4/15	20	24
0 1 0 1	1 0 1 0	5/15	25	30
0 1 1 0	1 0 0 1	6/15	30	36
0 1 1 1	1 0 0 0	7/15	35	42
1 0 0 0	0 1 1 1	8/15	40	48
1 0 0 1	0 1 1 0	9/15	45	54
1 0 1 0	0 1 0 1	10/15	50	60
1 0 1 1	0 1 0 0	11/15	55	66
1 1 0 0	0 0 1 1	12/15	60	72
1 1 0 1	0 0 1 0	13/15	65	78
1 1 1 0	0 0 0 1	14/15	70	84
1 1 1 1	0 0 0 0	15/15	75	90

Table above illustrates available output pressures for inlet pressures of 75 PSIG and 90 PSIG. Inlet pressure may be any value between 15 and 150 PSIG. Output pressure increment will be 1/15 of inlet pressure.

* 0 = Voltage "OFF"
1 = Voltage "ON"

† Available only on units with 6-Pin connector.

†† Shaded output pressures shown are theoretical and are below the minimum operating range of the valve and should not be used. Please refer to the Engineering Specifications for minimum output.

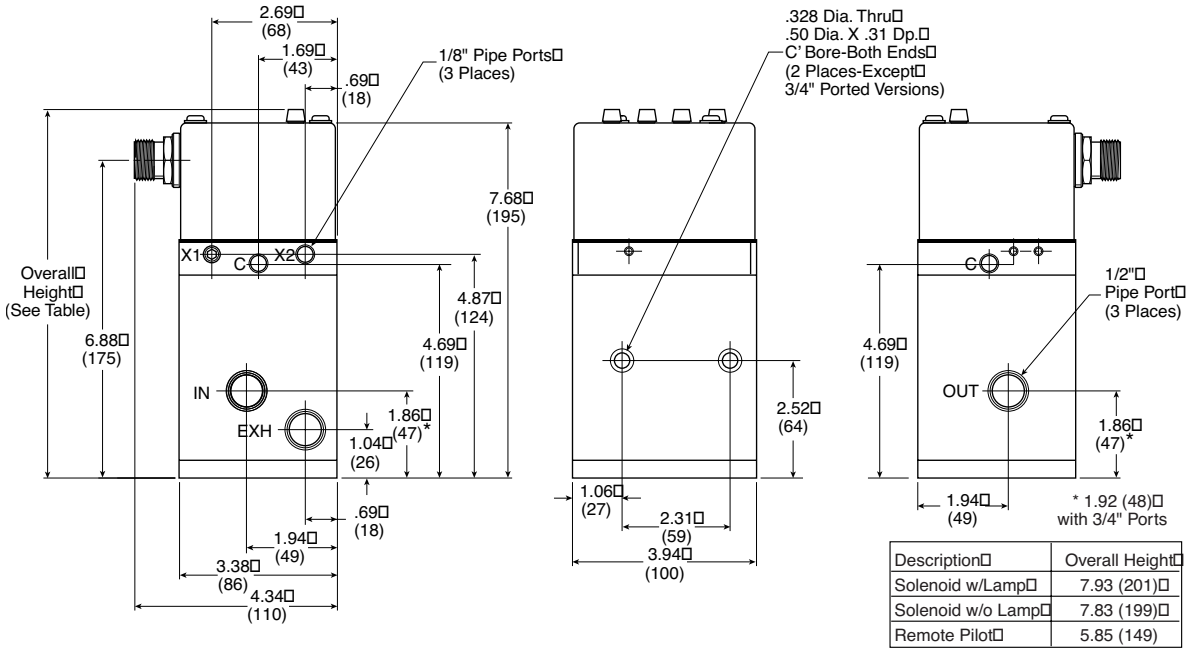

Description	Overall Height
Solenoid w/Lamp	7.93 (201)
Solenoid w/o Lamp	7.83 (199)
Remote Pilot	5.85 (149)

Tel: +45 63 12 83 00 | Email: ps@hymatik.com | www.hymatik.com | Hvidkaervej 27a, DK-5250 Odense SV, Denmark

Narrow Band Control

The PAR™-15 can also be used to provide a narrower band of output pressures with the lowest selected pressure greater than zero.

EXAMPLE:

Assume valve with normally closed solenoids. Customer desires to divide a range from 25 PSIG to 100 PSIG into 15 increments of 5 PSIG each. This is done by applying 100 PSIG to the external pilot supply port X1 and 25 PSIG to the pilot exhaust port X2.

Two 1/8 inch relieving regulators are required. The addition of one 3-Way normally closed solenoid operated valve allows the additional selection of 0 PSIG. These are connected as shown in the diagram. The relieving regulators set the upper and lower band limits. With a normally closed PAR™-15 valve, zero output pressure may be selected by simultaneously de-energizing the 3-Way valve and the PAR™-15 valve solenoids. With a normally open PAR™-15 valve, zero output pressure may be selected by simultaneously de-energizing the 3-Way valve and energizing the PAR™-15 valve solenoids.

Narrow Band Control Diagram

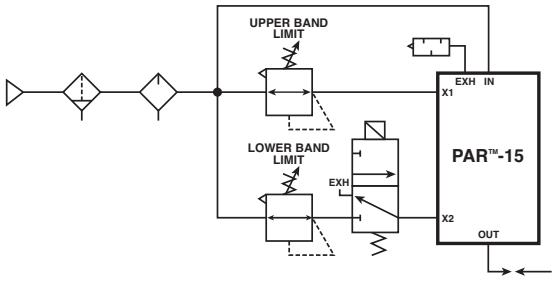

Note: For valves with normally open solenoids, reverse the X1 and X2 connections.

Cascading

Two PAR™-15's can also be used in conjunction to provide 240 steps (versus 15 steps from one valve), therefore more output pressures. See diagram.

Connect the outlet port marked OUT of the valve upstream to the 1/8" port marked C of the valve downstream. A port/pipe reducer(s) must be used to accomplish this task. If desired, a pressure gauge can be installed between these two points. A gauge isolator should be used to protect the gauge from pulsating pressures.

Connect the outlet port marked OUT of the valve downstream to the supply side of the system requiring multiple pressures. If desired, a pressure gauge can be installed downstream of the outlet port. A gauge isolator should be used to protect the gauge from pulsating pressures.

DO NOT PLUG THE 1/8" PORTS MARKED C AND X2 ON THE VALVE UPSTREAM AND X2 ON THE VALVE DOWNSTREAM.

Operation of the valves is the same as mentioned previously under the Operation section. See Cascading Truth Table for the proper input signal to each solenoid, and the resulting proportion of inlet pressure for an output pressure.

A formula can be used to calculate the output pressure of the valve downstream.

$$\text{OUTPUT PRESSURE (PSIG)} = \frac{\text{LINE PRESSURE (PSIG)}}{15} \times \left(\frac{\text{BINARY INPUT UPSTREAM VALVE}}{16} + \text{BINARY INPUT DOWNSTREAM VALVE} \right)$$

Where:

LINE PRESSURE is the supply pressure to both valves and it must be equal.

BINARY INPUT UPSTREAM VALVE is the binary number, a number from 0 to 15 depending on which solenoids are energized (normally closed solenoids) or de-energized (normally open solenoids) on the valve upstream.

BINARY INPUT DOWNSTREAM VALVE is the binary number, a number from 0 to 15 depending on which solenoids are energized (normally closed solenoids) or de-energized (normally open solenoids) on the valve downstream.

EXAMPLE:

Assume the line pressure is 120 PSIG, the valve upstream has inputs 1 & 2 energized, and the valve downstream has inputs 1 & 8 energized. Also, assume normally closed solenoids. What is the output pressure of the valve downstream?

SOLUTION:

BINARY INPUT VALVE UPSTREAM = 1 + 2 = 3

BINARY INPUT VALVE DOWNSTREAM = 1 + 8 = 9

$$\text{OUTPUT PRESSURE} = \frac{120}{15} \times \left(\frac{3}{16} + 9 \right) = 8 \times 9.1875 = 73.5 \text{ PSIG}$$

Cascade Diagram

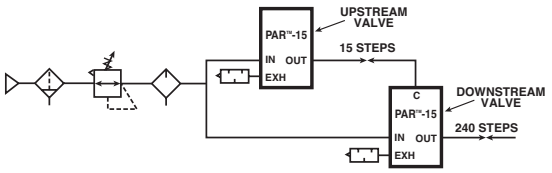

For inventory, lead times, and kit lookup, visit www.pdnplu.com

Parker Hannifin Corporation
Pneumatic Division
Richland, Michigan
www.parker.com/pneumatics

Tel: +45 63 12 83 00 | Email: ps@hymatik.com | www.hymatik.com | Hvidkaervej 27a, DK-5250 Odense SV, Denmark

Truth Table

	Normally Closed Solenoids		Normally Open Solenoids					
	Down-stream Step Valve	Up-stream Valve	Down-stream Valve	Up-stream Valve	Down-stream Valve	Up-stream Valve		
	Binary Input* 8 4 2 1	8 4 2 1	8 4 2 1	8 4 2 1	Proportion	Proportion	PSIG Output @	PSIG Output @
	Pin Number † 5 3 2 1	5 3 2 1	5 3 2 1	5 3 2 1	of Inlet Pressure +	of Inlet Pressure	60 PSIG Inlet ††	120 PSIG Inlet ††
0	0 0 0 0	0 0 0 0	1 1 1 1	1 1 1 1	0	0	0.00	0.00
1	0 0 0 0	0 0 0 1	1 1 1 1	1 1 1 0	0	1/240	0.25	0.50
2	0 0 0 0	0 0 1 0	1 1 1 1	1 1 0 1	0	2/240	0.50	1.00
3	0 0 0 0	0 0 1 1	1 1 1 1	1 1 0 0	0	3/240	0.75	1.50
4	0 0 0 0	0 1 0 0	1 1 1 1	1 0 1 1	0	4/240	1.00	2.00
5	0 0 0 0	0 1 0 1	1 1 1 1	1 0 1 0	0	5/240	1.25	2.50
6	0 0 0 0	0 1 1 0	1 1 1 1	1 0 0 1	0	6/240	1.50	3.00
7	0 0 0 0	0 1 1 1	1 1 1 1	1 0 0 0	0	7/240	1.75	3.50
8	0 0 0 0	1 0 0 0	1 1 1 1	0 1 1 1	0	8/240	2.00	4.00
9	0 0 0 0	1 0 0 1	1 1 1 1	0 1 1 0	0	9/240	2.25	4.50
10	0 0 0 0	1 0 1 0	1 1 1 1	0 1 0 1	0	10/240	2.50	5.00
11	0 0 0 0	1 0 1 1	1 1 1 1	0 1 0 0	0	11/240	2.75	5.50
12	0 0 0 0	1 1 0 0	1 1 1 1	0 0 1 1	0	12/240	3.00	6.00
13	0 0 0 0	1 1 0 1	1 1 1 1	0 0 1 0	0	13/240	3.25	6.50
14	0 0 0 0	1 1 1 0	1 1 1 1	0 0 0 1	0	14/240	3.50	7.00
15	0 0 0 0	1 1 1 1	1 1 1 1	0 0 0 0	0	15/240	3.75	7.50
16	0 0 0 1	0 0 0 0	1 1 1 0	1 1 1 1	1/15	0	4.00	8.00
17	0 0 0 1	0 0 0 1	1 1 1 0	1 1 1 0	1/15	1/240	4.25	8.50
18	0 0 0 1	0 0 1 0	1 1 1 0	1 1 0 1	1/15	2/240	4.50	9.00
19	0 0 0 1	0 0 1 1	1 1 1 0	1 1 0 0	1/15	3/240	4.75	9.50
20	0 0 0 1	0 1 0 0	1 1 1 0	1 0 1 1	1/15	4/240	5.00	10.00
21	0 0 0 1	0 1 0 1	1 1 1 0	1 0 1 0	1/15	5/240	5.25	10.50
22	0 0 0 1	0 1 1 0	1 1 1 0	1 0 0 1	1/15	6/240	5.50	11.00
23	0 0 0 1	0 1 1 1	0 0 1 0	1 1 0 0	1/15	7/240	5.75	11.50
	0 0 0 1	1 0 0 0	0 0 1 0	0 1 1 1	13/15			
212	0 0 0 0	1 1 1 1	0 0 1 0	1 0 1 1	13/15	4/240	53.00	106.00
213	0 0 0 0	0 0 0 0	0 0 1 0	1 0 1 0	13/15	5/240	53.25	106.50
214	0 0 0 0	0 0 0 0	0 0 1 0	1 0 0 1	13/15	6/240	53.50	107.00
215	0 0 0 0	0 0 0 0	0 0 1 0	1 0 0 0	13/15	7/240	53.75	107.50
216	0 0 0 0	0 0 0 0	0 0 1 0	0 1 1 1	13/15	8/240	54.00	108.00
217	0 0 0 0	0 0 0 0	0 0 1 0	0 1 1 0	13/15	9/240	54.25	108.50
218	0 0 0 0	0 0 0 0	1 1 1 1	0 1 0 1	13/15	10/240	54.50	109.00
219	0 0 0 0	0 0 0 0	0 0 0 1	0 1 0 0	0	11/240	54.75	109.50
	1 1 1 0	0 1 0 1	0 0 0 1	1 0 1 1		12/240	55.00	
	1 1 1 0	0 1 1 0	0 0 0 1	1 0 1 0	14/15			
231	1 1 1 0	0 1 1 1	0 0 0 1	1 0 0 1	14/15	7/240	57.75	115.50
232	1 1 1 0	1 0 0 0	0 0 0 1	1 0 0 0	14/15	8/240	58.00	116.00
233	1 1 1 0	1 0 0 1	0 0 0 1	0 1 1 1	14/15	9/240	58.25	116.50
234	1 1 1 0	1 0 1 0	0 0 0 1	0 1 1 0	14/15	10/240	58.50	117.00
235	1 1 1 0	1 0 1 1	0 0 0 1	0 1 0 1	14/15	11/240	58.75	117.50
236	1 1 1 0	1 1 0 0	0 0 0 1	0 1 0 0	14/15	12/240	59.00	118.00
237	1 1 1 0	1 1 0 1	0 0 0 1	0 0 1 0	14/15	13/240	59.25	118.50
238	1 1 1 0	1 1 1 0	0 0 0 1	0 0 0 1	14/15	14/240	59.50	119.00
239	1 1 1 0	1 1 1 1	0 0 0 1	0 0 0 0	14/15	15/240	59.75	119.50
240	1 1 1 1	0 0 0 0	0 0 0 0	1 1 1 1	15/15	0	60.00	120.00

Table above illustrates available output pressures for inlet pressures of 75 PSIG and 90 PSIG. Inlet pressure may be any value between 15 and 150 PSIG. Output Pressure increment will be 1/15 of inlet pressure.

* 0 = Voltage "OFF"
1 = Voltage "ON"

† Available only on units with 6-Pin connector.

†† Shaded output pressures shown are theoretical and are below the minimum operating range of the valve and should not be used. Please refer to the Engineering Specifications for minimum output.

Note: Full table appears in instruction sheet enclosed with the product.

For inventory, lead times, and kit lookup, visit www.pdnplu.com

Parker Hannifin Corporation
Pneumatic Division
Richland, Michigan
www.parker.com/pneumatics

Solenoid Kits & Electrical Data

Class F Solenoids

Voltage / Cycles	Solenoid Type*	Power Consumption (watts)	Holding Current (AMPS)	Part Number
12VDC	NC	1.2W	0.1	**PS2982B45P**
24VDC	NC	1.2W	0.05	**PS2982B49P**
120V/60Hz	NC	1.6VA	0.013	**PS2982B53P**
24V/60Hz	NC	1.6VA	0.066	**PS2982B42P**
24V/60Hz	NO	2.4VA	0.1	**PS3202B42P**
12VDC	NO	1.8W	0.15	**PS3202B45P**
24VDC	NO	1.8W	0.075	**PS3202B49P**
120V/60Hz	NO	2.4VA	0.02	**PS3202B53P**

* NC = Normally Closed
NO = Normally Open

Units with No Enclosure

Connect input and common signals to each one of the solenoids marked with the binary inputs 1, 2, 4 and 8, using the 3-Pin female connector kits shown in the catalog. Follow the installation instructions included with the 3-Pin female connector kits for the proper installation.

If you elect not to use the 3-Pin female connector kits, you may use three female spade connectors per solenoid and connect the wires as shown on the figure.

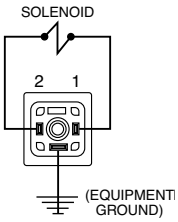

Units with Enclosure and Without 6-Pin Receptacle

Connect input and common signals to the terminal block on the circuit board labelled TB1. Connect each solenoid input (1, 2, 4, & 8) to the respective label on the circuit board. Connect each common to the input labelled C on the circuit board.

Units with Enclosure and 6-Pin Micro Receptacle

These units use the following brand names for 6-Pin micro connectors:

Brand name	Receptacle	Connector w/ 6 foot cord
Brad Harrison	7R6006A19A120	706000D02F060
Joy	5000127-41	5000127-2

Connection is made as shown in the chart below.

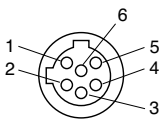

Micro

Pin	Wire color	Function
1	Red-White	Input 1
2	Red	Input 2
3	Green	Equipment Ground
4	Red-Yellow	Common
5	Red-Black	Input 8
6	Red-Blue	Input 4

Units with Enclosure and 6-Pin Mini Connector

These units use either one of the following brand names for 6-Pin mini connectors:

Brand Name	Receptacle	Connector w/ 6 Foot Cord
Brad Harrison	42605	42602
Joy	X8987-2	X8987-4

Connection is made as shown in the chart below.

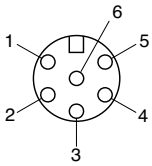

Mini

Pin	Wire color	Function
1	Orange	Input 1
2	Blue	Input 2
3	Black	Input 4
4	White	Common
5	Red	Input 8
6	Green	Equipment Ground

Units with Enclosure, 6-Pin Connector and Indicator Lamps

Each indicator lamp signals when the corresponding solenoid operator is actuated. Lamps that fail to light may need to be replaced or a check made to see if a connection has become loose.

Follow the service kit instructions included with the repair kits for proper installation of replacement lamps.

For units with DC solenoids and indicator lamps red wire is (+) positive white wire is (-) negative.

⚠ **Caution: DC solenoids with indicator lamps are polarity sensitive. Observe polarities indicated above.**

Available Lamps

Description	Part number
Lamp (120/60AC) with spring clip	**K352428B**
Lamp (24VDC) with spring clip	**K352429B**

15mm 3-Pin DIN 43650C

Description	Connector	Connector with 6' (2m) Cord
Unlighted	**PS2932BP**	**PS2932JBP**
Light – 12VAC or DC	**PS294675BP**	**PS2946J75BP***
Light – 24VAC or DC	**PS294679BP**	**PS2946J79BP***
Light – 110/120VAC	**PS294683BP**	**PS2946J83BP***

* LED with surge suppression.

Note: Max ø6.5mm cable size required for connector w/o 6' (2m) cord.

Engineering Data:

Conductors: 2 Poles Plus Ground
Cable Range (Connector Only):
4 to 6mm (0.16 to 0.24 Inch)
Contact Spacing: 8mm

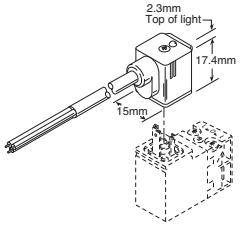

Service Kit

Piston, poppet assembly, all rubber seals and gaskets	**K352413B**

Parker Hannifin Corporation
Pneumatic Division
Richland, Michigan
www.parker.com/pneumatics

Tel: +45 63 12 83 00 | Email: ps@hymatik.com | www.hymatik.com | Hvidkaervej 27a, DK-5250 Odense SV, Denmark

Flow Characteristics

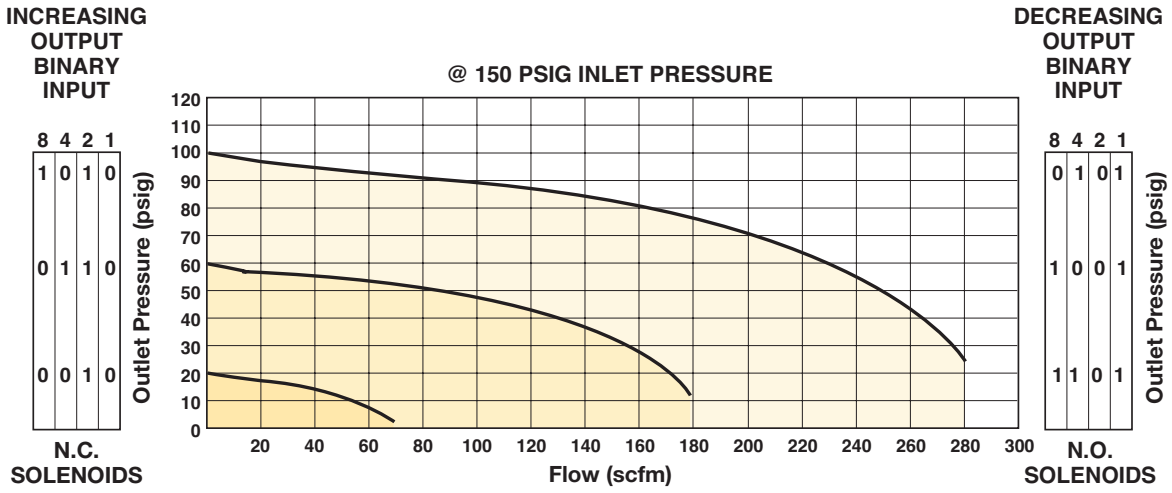

Typical Time Response

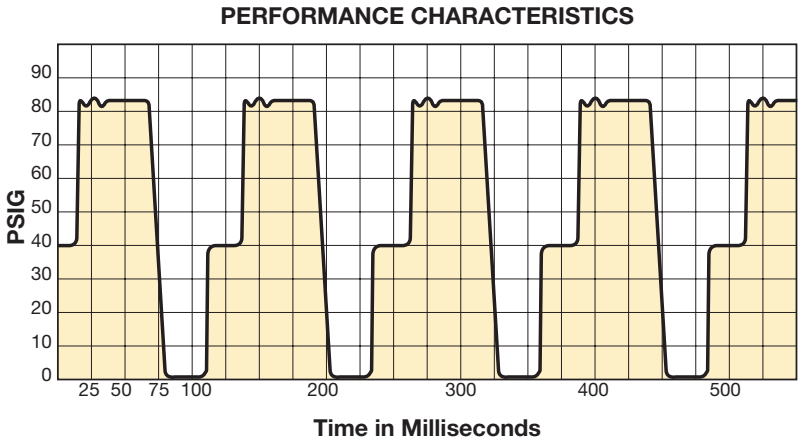

Actual test results show rapid response on a robot welding operation at a major U.S. automotive manufacturer.

NOTE: Although graph illustrates pressure dropping to 0 PSIG at the end of each cycle, the PAR™-15 valve can shift down to intermediate pressure steps, i.e. from 75 PSIG to 45 PSIG, without returning to 0 PSIG first.

Tel: +45 63 12 83 00 | Email: ps@hymatik.com | www.hymatik.com | Hvidkaervej 27a, DK-5250 Odense SV, Denmark

Lucifer® EPP4 1/4", 1/2" & 1/2" HP



Part number	Pipe	Max inlet pressure bar (PSIG)	Pressure range bar (PSIG)	Control signal
P4CN2001C001	1/4 NPT	1 to 12 (15 to 174)	0 to 10 (0 to 145)	0 to 10 V **
P4CN4001C001	1/2 NPT	1 to 12 (15 to 174)	0 to 10 (0 to 145)	0 to 10 V **
P4CG4201D003*†	1/2 BSPP	1 to 21 (15 to 305)	0 to 20 (0 to 290)	0 to 10 V **

Notes: For thread type NPT use **N**, for BSPP use **G**.

* HP (High Pressure).

** 4-20mA available via Calys software.

† Only available in BSPP.

For other configurations not listed please consult factory. (Example: ATEX Series EX: II 3 D/G, O2 compatible, External Pilot, etc.)

Flow Curves

Flow Curve 1/4"

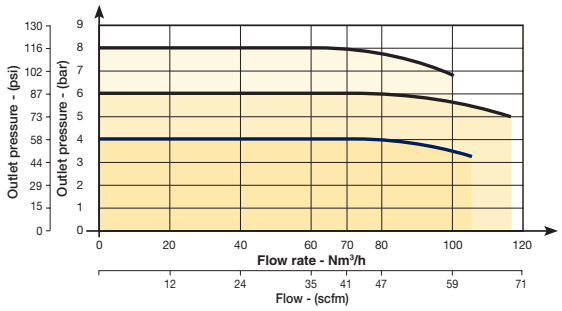

Flow Curve 1/2"

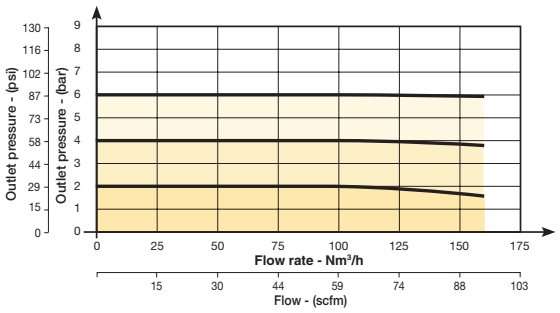

Flow Curve 1/2" HP

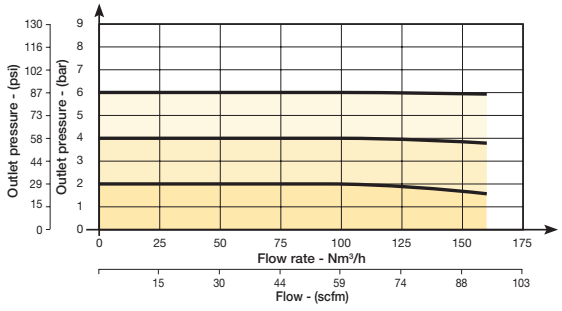

Tel: +45 63 12 83 00 | Email: ps@hymatik.com | www.hymatik.com | Hvidkaervej 27a, DK-5250 Odense SV, Denmark

Lucifer® EPP4 1/4" & 1/2"

Technical Data

	EPP4 1/4"	EPP4 1/2"
Fluids:	**Lubricated or non lubricated air and neutral gases - Recommended filtration: 40 µm or better**	
Temperature range:	Ambient: 0°C to 50°C (32°F to 122°F) Fluid: 0°C to 50°C (32°F to 122°F)	
Inlet pressure range: The inlet pressure must always be at least 1 bar above the regulated pressure.	1 to 12 bar (14.5 to 174 PSIG)	1 to 12 bar (14.5 to 174 PSIG)
Outlet pressure range:	0.05 to 10 bar (.725 to 145 PSIG)	
Hysteresis:	± 50 mbar (.725 PSIG) (factory set up)	
Air consumption at constant control signal:	0	
Supply voltage:	24 V DC ± 15 % (Max. ripple 1 V)	
Power consumption:	Max. 2.8 W with 24 V DC and constant changes of the control signal < 1.5 W without change of control signal	
Control signal:	Analog 0 - 10 V Analog 4 - 20 mA field convertible	
Outlet sensor signal:	Analog 0 - 10 V Standard for 0 - 10 bar; Adjustable Analog 4 - 20 mA Standard for 0 - 10 bar; Adjustable	Digital 0 - 24 V for alarm features: Adjustable pressure error (+/-) Adjustable delay ON Adjustable delay OFF Adjustable logic (+/-)
Max. flow:	70 m^3/h (41 SCFM)	150 m^3/h (88 SCFM)
Indicative response time:	With a volume of 330 cm^3 (20.14 in^3) at the outlet of the regulator	
Filling 2 to 4 bar (29 to 58 PSI): Filling 2 to 8 bar (29 to 116 PSI): Emptying 4 to 2 bar (29 to 116 PSI): Emptying 8 to 2 bar (29 to 116 PSI):	50 msec 100 msec 70 msec 130 msec	60 msec 120 msec 90 msec 190 msec
Safety position:	In case of control signal failure or if it is less than 50 mV, the regulated pressure drops automatically to 0 bar (atmospheric pressure). In case of voltage supply failure, the regulated pressure will be kept constant.	
Electrical connection:	M12 - 8 pin; male connector power supply/control signal M12 - 5 pin; male connector communication	
Life expectancy:	> 50 million changes of control signal steps	
Mounting position:	Indifferent (recommended position: upright; electronic part on top)	
Resistance to vibrations:	30 g in all directions	
Degree of protection:	IP65	
Assembly:	Silicone free	
Electromagnetic compatibility: **In accordance with:**	EN 61000-6-1: 2001 EN 61000-6-2: 2001 EN 61000-6-3: 2001 + A11 2004 edition (01/07/07) EN 61000-6-4: 2001	
Installation and setting instructions:	See Bulletin 408128, 408134 and appendix supplied with the product.	

Note: Parker reserves the right to change specifications without notification.

Lucifer® EPP4 1/2" HP

Technical Data

	EPP4 1/2" HP
Fluids:	Lubricated or non lubricated air and neutral gases - Recommended filtration: 50 µm
Temperature range:	Ambient: 0°C to 50°C (32°F to 122°F) Fluid: 0°C to 50°C (32°F to 122°F)
Inlet pressure range: **The inlet pressure must always be at least 1 bar above the regulated pressure.**	1 to 21 bar (14.5 to 305 PSIG)
Outlet pressure range:	0.05 to 20 bar (.73 to 290 PSIG)
Hysteresis:	≤ 100 mbar (1.45 PSIG) if P inlet ≤ 10 bar (145 PSIG) ≤ 200 mbar (2.90 PSIG) if P inlet > 10 bar (145 PSIG)
Air consumption at constant control signal:	0
Supply voltage:	24V DC ± 15%
Power consumption:	Max. 6 W with 24 V DC and constant changes of the control signal < 2 W without change of control signal
Control signal:	Analog 0 - 10 V Analog 4 - 20 mA field convertible
Outlet sensor signal:	Analog 0 - 10 V Standard for 0 - 10 bar; Adjustable Analog 4 - 20 mA Standard for 0 - 10 bar; Adjustable
Max. flow:	150 m^3/h (88 SCFM)
Indicative response time:	With a volume of 330 cm^3 (20.14 in^3) at the outlet of the regulator
Filling 2 to 8 bar (29 to 116 PSI):	120 msec
Emptying 8 to 2 bar (116 to 29 PSI):	190 msec
Safety position:	In case of control signal failure or if it is less than 50 mV, the regulated pressure drops automatically to 0 bar atmospheric pressure (for pressure ranges from 0-10 bar, 100 mV for pressure range over 10 bar). In case of voltage supply failure, the regulated pressure will be kept constant.
Electrical connection:	M12 - 8 pin; male connector power supply/control signal M12 - 5 pin; male connector communication
Life expectancy:	> 20 Million changes of control signal steps
Mounting position:	Indifferent (recommended position: upright; electronic part on top)
Resistance to vibrations:	30 g in all directions
Degree of protection:	IP65
Assembly:	Silicone free
Electromagnetic compatibility: **In accordance with:**	EN 61000-6-1: 2001 EN 61000-6-2: 2001 EN 61000-6-3: 2001 + A11 2004 edition (01/07/07) EN 61000-6-4: 2001
Installation and setting instructions:	See Bulletin 408193 and appendix supplied with the product.

Note: Parker reserves the right to change specifications without notification.

Tel: +45 63 12 83 00 | Email: ps@hymatik.com | www.hymatik.com | Hvidkaervej 27a, DK-5250 Odense SV, Denmark

Lucifer® EPP4 1/4" & 1/2"

Dimensions EPP4 1/4"



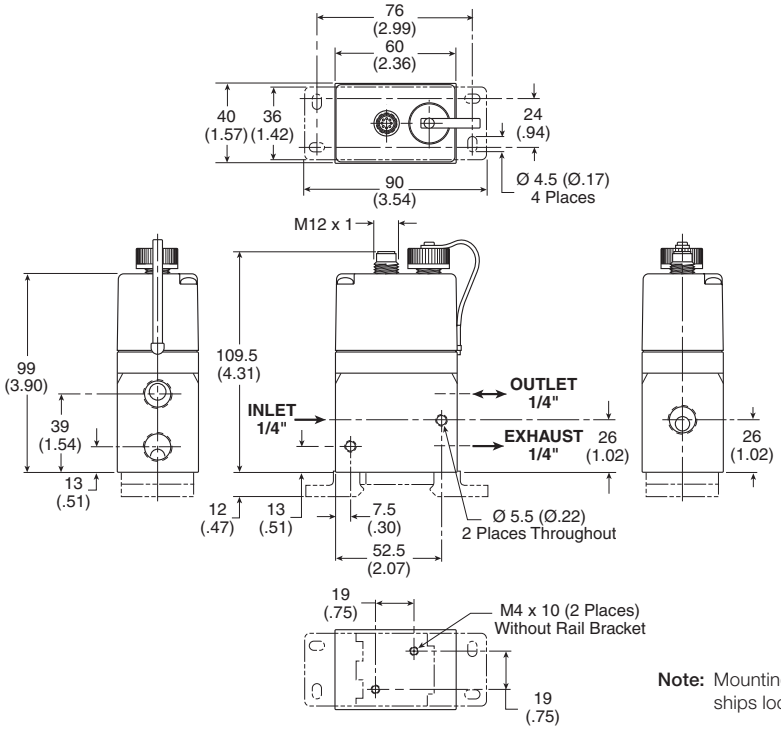

Note: Mounting bracket ships loose.

Dimensions EPP4 1/2"



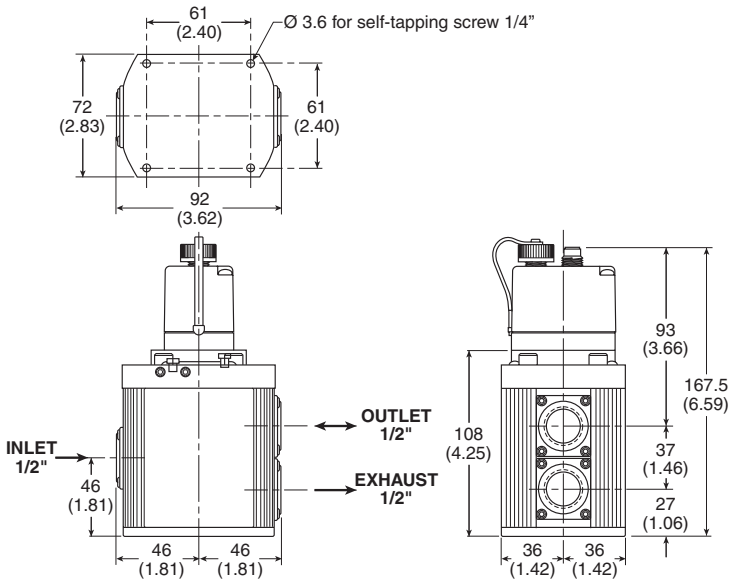

For inventory, lead times, and kit lookup, visit www.pdnplu.com

Parker Hannifin Corporation
Pneumatic Division
Richland, Michigan
www.parker.com/pneumatics

Lucifer® EPP4 1/2" HP

Dimensions EPP4 1/2" HP



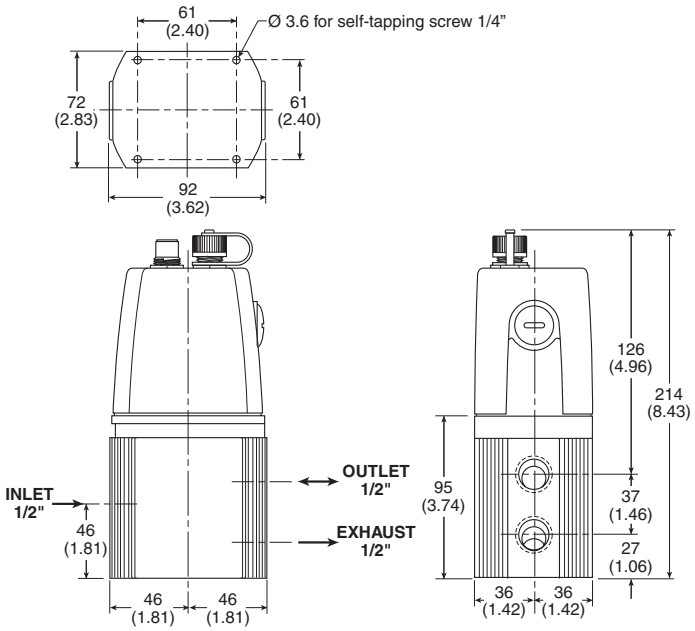

For inventory, lead times, and kit lookup, visit www.pdnplu.com

Parker Hannifin Corporation
Pneumatic Division
Richland, Michigan
www.parker.com/pneumatics

Lucifer® EPP4 Accessories

Mounting Brackets for EPP4 1/4"

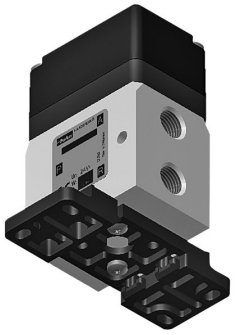





Note: Mounting bracket comes standard with all EPP4 1/4" units, and is shipped loose.

Mounting Brackets for EPP4 1/2"



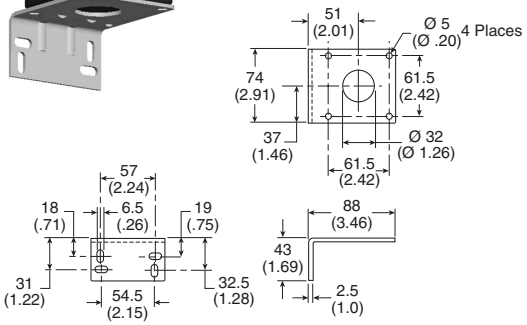

L Bracket

Part Number 491367



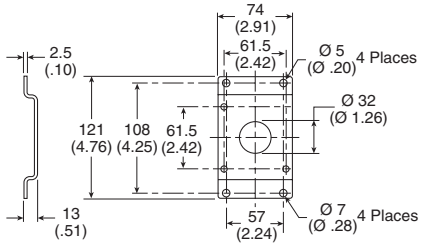

Foot Bracket

Part Number 491366

For inventory, lead times, and kit lookup, visit www.pdnplu.com

Parker Hannifin Corporation
Pneumatic Division
Richland, Michigan
www.parker.com/pneumatics

Tel: +45 63 12 83 00 | Email: ps@hymatik.com | www.hymatik.com | Hvidkaervej 27a, DK-5250 Odense SV, Denmark

Lucifer® EPP4 Accessories

Power Supply / Control Signal and Communication Cables

EPP4 Cable

- 2m cable with molded straight M12-8 pole to flying lead

Part Number RKC8T-2

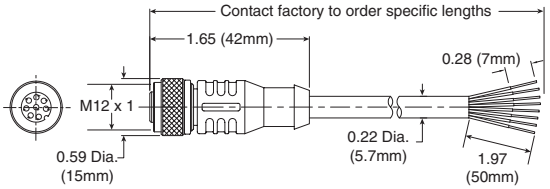

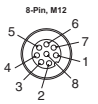



Cable Pin	Color
1	White
2	Brown
3	Green
4	Yellow
5	Grey
6	Pink
7	Blue
8	Red

EPP4 Cable

- 2m cable with molded straight M12-5 pole to USB

Part Number 496449



First M12 / 8 pole connector:
power supply & control signal
Electrical Connection (A)

Second M12 / 5 pole connector:
remote display or PC communication
Electrical Connection (B)



Electrical Connection (A)

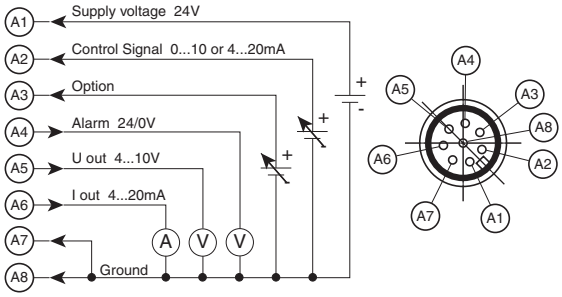

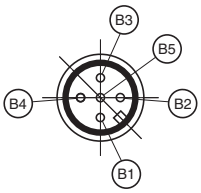

Electrical Connection (B)

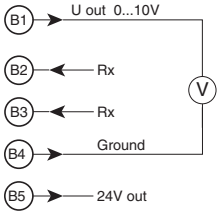

For inventory, lead times, and kit lookup, visit www.pdnplu.com

Parker Hannifin Corporation
Pneumatic Division
Richland, Michigan
www.parker.com/pneumatics

Tel: +45 63 12 83 00 | Email: ps@hymatik.com | www.hymatik.com | Hvidkaervej 27a, DK-5250 Odense SV, Denmark

Lucifer® EPP4 Accessories

calys Software

Calys is developed to configure all the parameters of the EPP4. A specific cable is needed for the communication between the EPP4 and a PC.

To download free Calys software click on

www.parker.com/fcde/support

Calys offers many capabilities:

- Live monitoring (control signal, regulated pressure, supply voltage,…)
- Recording of the main parameters (control signal, regulated pressure, supply voltage,…) in an Excel file
- Free calibration for the inputs and outputs
- Adjustable alarm (positive-negative, pressure limits, delays)
- Configuration files are easy to duplicate
- Complete and interactive help file
- Data in 4 different pressure units
- Menus in 4 languages (English, German, French and Italian)



Specific communication cable with M12, 5-pole to USB connection

Part Number 496449

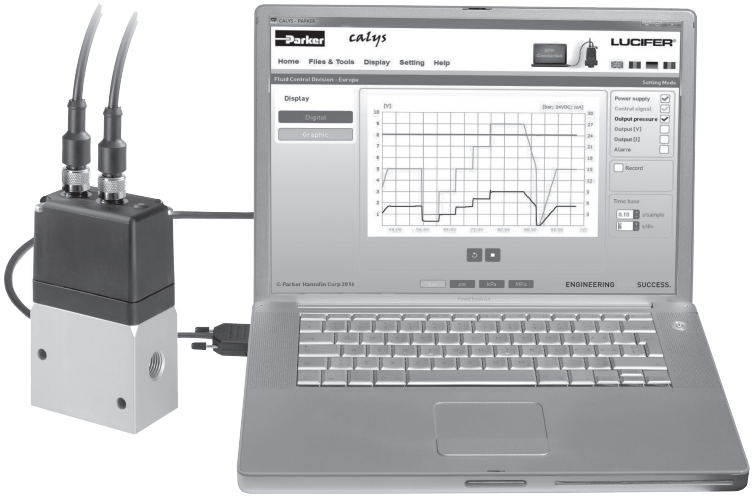

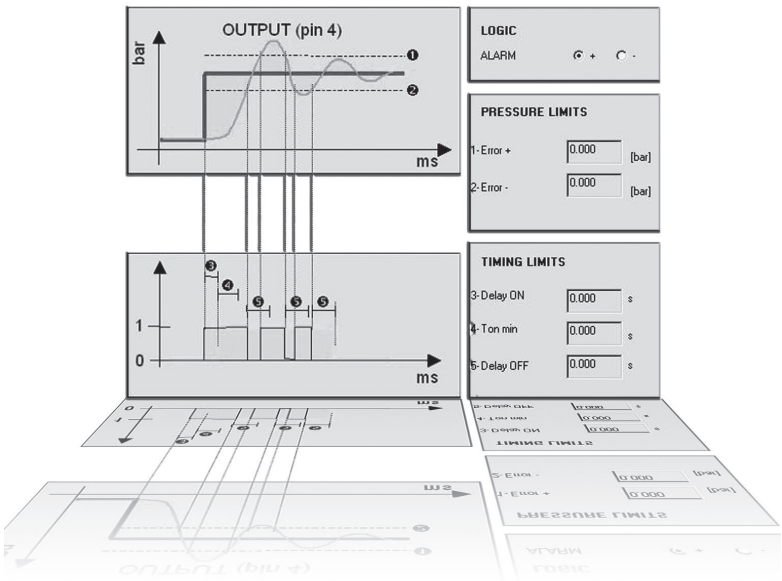

P3RA302 High Precision Regulators

The P3RA302 Regulator is designed for applications that require high capacity and accurate process control in a small package. A poppet valve which is balanced by utilizing a convoluted diaphragm, insures a constant output pressure even during wide supply pressure variations. Stability of regulated pressure is maintained under varying flow conditions through the use of an aspirator tube which adjusts the air supply in accordance with the flow velocity.

- Control sensitivity of .250" (.010 psig) (.64 cm) water column variation allows use in precision applications
- A compensating diaphragm lets the regulator remain unaffected by supply pressure changes
- An aspirator tube compensates downstream pressure droop under flow conditions
- A separate control chamber isolates the diaphragm from the main flow to eliminate hunting and buzzing
- Unit construction lets you service the regulator without removing it from the line
- 1/4" port (NPT)



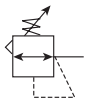

Port Size	Description	Part Number
1/4"	0.5 to 30 psig	**P3RA30232**
1/4"	1 to 60 psig	**P3RA30242**
1/4"	2 to 100 psig	**P3RA30252**

Operating information

Supply pressure:	250 psig (17.2 bar), (1700 kPa) max
Ambient temperature:	-40°F to 200°F (-40°C to 93°C)
Sensitivity:	.250" (.010 psig) (.64 cm) water column
Flow capacity:	40 scfm (68 m^3/HR) @ 100 psig (7.0 bar), (700 kPa) supply and 20 psig (1.5 bar), (150 kPa) setpoint
Exhaust capacity:	2.0 scfm (3.4 m3/HR) where downstream pressure is 5 psig (.35 bar), (35 kPa) above 20 psig (1.5 bar), (150 kPa) setpoint
Supply pressure effect:	Less than 0.2 psig, (.014 bar), (.14 kPa) for 100 psig, (7.0 bar), (700 kPa) change in supply pressure
Hazardous locations:	Acceptable for use in zones 1 and 2 for gas atmosphere: Groups IIA and IIB and zones 21 and 22 for dust atmospheres

Ordering Information:

P3RA302 | **4** | **2** | ☐

Springs	
0.5 to 30 psig	3
1 to 60 psig	4
2 to 100 psig	5

Pipe Size	
1/4 inch	2

Options	
Blank	No Options
H	BSPP
N	Non-Relieving

Note: Other Spring Ranges, Port Sizes, and Options Available. Please Consult Factory

☐ Most popular.

Parker Hannifin Corporation
Pneumatic Division
Richland, Michigan
www.parker.com/pneumatics

Tel: +45 63 12 83 00 | Email: ps@hymatik.com | www.hymatik.com | Hvidkaervej 27a, DK-5250 Odense SV, Denmark

Material Specifications

Body and housing	Aluminum
Diaphragms	Nitrile on dacron
Trim	Brass

Repair and Service Kits

Nitrile, standard - 1/2 to 30, 1 to 60, & 2 to 100 psig	**PS16116-13**
Nitrile, non-relieving - 1/2 to 30, 1 to 60, & 2 to 100 psig	**PS16116-14**
Tamper Resistant Kit	**PS12163**
Mounting Bracket Kit	**PS21667-1**

Mounting bracket

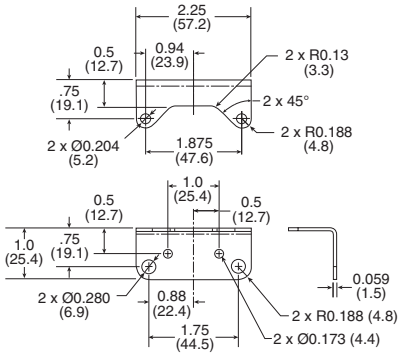

⚠ WARNING

Product rupture can cause serious injury.
Do not connect regulator to bottled gas.
Do not exceed Maximum primary pressure rating.

CAUTION:

REGULATOR PRESSURE ADJUSTMENT – The working range of knob adjustment is designed to permit outlet pressures within their full range. Pressure adjustment beyond this range is also possible because the knob is not a limiting device. This is a common characteristic of most industrial regulators, and limiting devices may be obtained only by special design. For best performance, regulated pressure should always be set by increasing the pressure up to the desired setting.

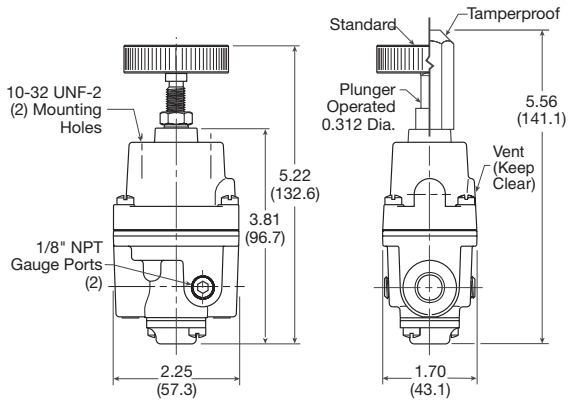

Inches (mm)

Flow Charts

P3RA302 1/4" Regulator

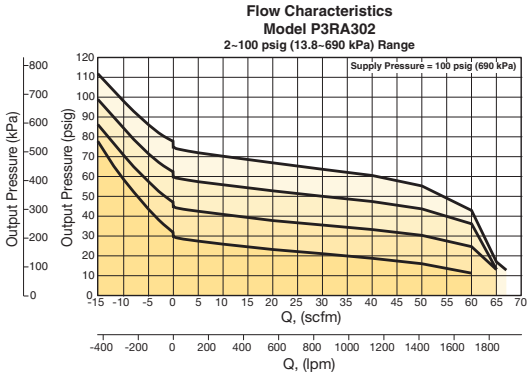

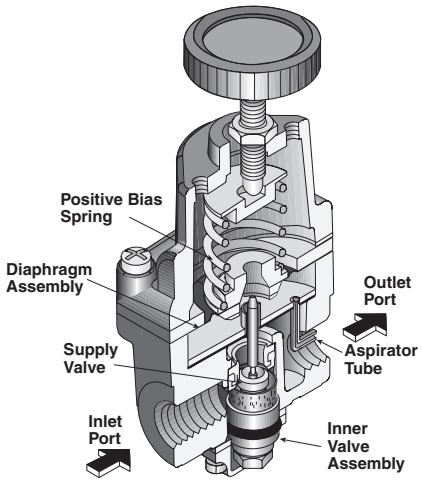

Operating Principles

The P3RA302 Regulator uses the force balance principal to control the movement of the valve assembly which in turn controls the output pressure. When the regulator is adjusted for a specific set point, the downward force of the Positive Bias Spring causes the Diaphragm Assembly to move downward. The Supply Valve opens and allows air to pass to the Outlet Port. As the set point is reached, the downward force exerted by the Positive Bias spring is balanced by the upward force of the downstream pressure acting on the bottom of the Diaphragm Assembly. The resultant force moves the supply Valve upward to reduce the flow of air to the Outlet Port.

Outlet pressure is maintained as a result of balance between forces acting on the top and bottom of the Diaphragm Assembly.

For inventory, lead times, and kit lookup, visit www.pdnplu.com

Parker Hannifin Corporation
Pneumatic Division
Richland, Michigan
www.parker.com/pneumatics

Tel: +45 63 12 83 00 | Email: ps@hymatik.com | www.hymatik.com | Hvidkaervej 27a, DK-5250 Odense SV, Denmark

P3RA102 High Precision Regulators

The P3RA102 Regulator is designed for applications that require high capacity and accurate process control. A poppet valve which is balanced by utilizing a rolling diaphragm, insures a constant output pressure even during wide supply pressure variations. Stability of regulated pressure is maintained under varying flow conditions through the use of an aspirator tube which adjusts the air supply in accordance with the flow velocity.

- Control sensitivity of .125" (.005 psig) (.32 cm) water column allows use in precision processes
- Pressure balanced supply valve prevents supply pressure changes from affecting the setpoint
- Optional check valve permits dumping of downstream pressure when supply is opened to atmosphere
- Separate control chamber isolates the diaphragm from the main flow to eliminate hunting and buzzing
- An aspirator tube compensates downstream pressure droop under flow conditions



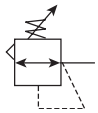

Port Size	Description	Part Number
1/4"	0.5 to 30 psig	**P3RA10232**
1/4"	1 to 60 psig	**P3RA10242**
1/4"	2 to 150 psig	**P3RA10262**

Operating information

Supply pressure:	500 psig (35 bar), (3500 kPa) max
Ambient temperature:	-40°F to 200°F (-40°C to 93°C)
Sensitivity:	.125" (.005 psig) (.32 cm) water column
Flow capacity:	40 scfm (68 m^3/HR) @ 100 psig (7.0 bar), (700 kPa) supply and 20 psig (1.5 bar), (150 kPa) setpoint
Exhaust capacity:	5.5 scfm (9.35 m3/HR) where downstream pressure is 5 psig, (.35 bar), (35 kPa) above 20 psig (1.5 bar), (150 kPa) setpoint
Supply pressure effect:	Less than 0.1 psig (.007 bar), (.7 kPa) for 100 psig, (7.0 bar), (700 kPa) change in supply pressure
Hazardous locations:	Acceptable for use in zones 1 and 2 for gas atmosphere: Groups IIA and IIB and zones 21 and 22 for dust atmospheres

Ordering Information:

P3RA102 | **6** | **2** | ☐

Springs	
0.5 to 30 psig	3
1 to 60 psig	4
2 to 150 psig	6

Pipe Size	
1/4 inch	2

Options	
Blank	No Options
H	BSPP
N	Non-Relieving

Note: Other spring ranges, port sizes, and options available. Please consult factory

☐ Most popular.

Tel: +45 63 12 83 00 | Email: ps@hymatik.com | www.hymatik.com | Hvidkaervej 27a, DK-5250 Odense SV, Denmark

Material Specifications

Body and housing	Aluminum
Diaphragms	Buna N on dacron (standard unit only)
Trim	zinc plated steel, brass

Repair and Service Kits

0 to 200 psig, relieving	**PS12125-1**
0 to 200 psig, non-relieving	**PS12125-4**
Tamper resistant kit	**PS12165**
Mounting bracket kit, zinc plated steel	**PS09921**

Mounting bracket

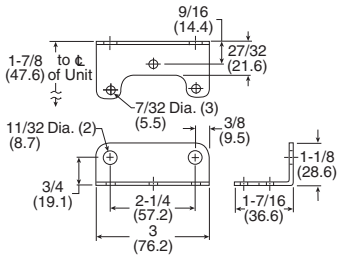

⚠ WARNING

Product rupture can cause serious injury.
Do not connect regulator to bottled gas.
Do not exceed Maximum primary pressure rating.

CAUTION:

REGULATOR PRESSURE ADJUSTMENT – The working range of knob adjustment is designed to permit outlet pressures within their full range. Pressure adjustment beyond this range is also possible because the knob is not a limiting device. This is a common characteristic of most industrial regulators, and limiting devices may be obtained only by special design. For best performance, regulated pressure should always be set by increasing the pressure up to the desired setting.

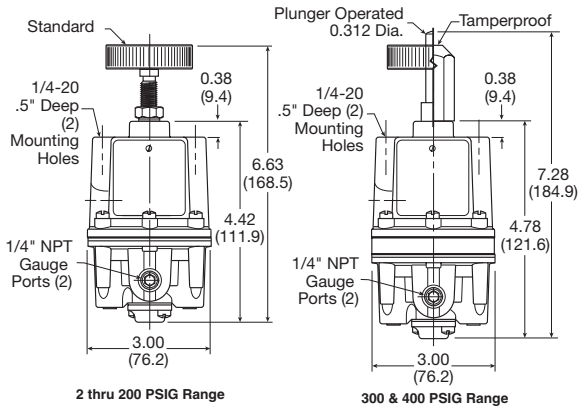

Inches (mm)

Flow Charts

P3RA102 1/4" Regulator

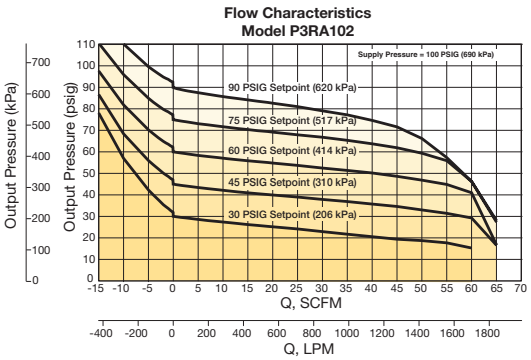

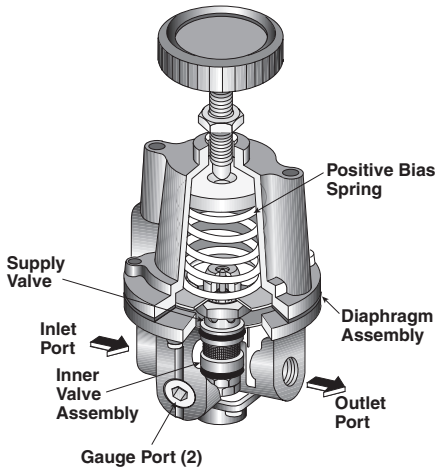

Operating Principles

The P3RA102 Series regulator use the force balance principal to control the movement of the Valve Assembly that controls the output pressure. When the regulator is adjusted for a specific set point, the downward force of the Positive Bias Spring moves the Diaphragm Assembly downward. The Supply Valve opens and allows air to pass to the Outlet Port. As the set point is reached, the downward force exerted by the Positive Bias Spring is balanced by the force of the downstream pressure that acts on the Diaphragm Assembly. The resultant force moves the Supply Valve upward to reduce the flow of air to the Outlet Port.

Outlet pressure is maintained as a result of balance between forces acting on the top and bottom of the Diaphragm Assembly.

For inventory, lead times, and kit lookup, visit www.pdnplu.com

Parker Hannifin Corporation
Pneumatic Division
Richland, Michigan
www.parker.com/pneumatics

Tel: +45 63 12 83 00 | Email: ps@hymatik.com | www.hymatik.com | Hvidkaervej 27a, DK-5250 Odense SV, Denmark

P3RA102BP High Precision Relief Valves

The P3RA102BP is a high capacity relief valve that relieves excess pressure in a pneumatic system.

The P3RA102BP provides greater accuracy than standard relief valves over a narrow pressure range. The P3RA102BP is an excellent choice for a wide range of precision applications.

- Control sensitivity of .125" (.005 psig) (.32 cm) water column allows use in precision applications
- A separate control chamber and Aspirator Tube isolate the diaphragm from the main flow to eliminate hunting and buzzing
- Unit construction lets you service without removing it from the line
- Mounting bracket is available



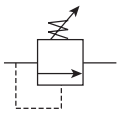

Port Size	Description	Part Number
1/4"	0.5 to 30 psig	**P3RA10232BP**
1/4"	1 to 60 psig	**P3RA10242BP**
1/4"	2 to 150 psig	**P3RA10262BP**

Operating information

Setpoint range 2 to 200 psig (0.15 to 14 bar) (15 to 1400 kPa) 300 to 400 psig (21 to 28 bar) (2100 to 2800 kPa)	System pressure (maximum) 300 psig (20.7 bar), (2100 kPa) max 500 psig (35 bar), (3500 kPa) max
Ambient temperature:	-40°F to 200°F (-40°C to 93°C)
Sensitivity:	.125" (.005 psig) (.32 cm) water column
Flow capacity:	40 scfm (68 m3/HR) @ 100 psig, (7.0 bar), (700 kPa) system pressure

Ordering Information:

P3RA102 | **6** | **2** | ☐ | ☐

Springs	
0.5 to 30 psig	3
1 to 60 psig	4
2 to 150 psig	6

Pipe Size	
1/4 inch	2

Options	
BP	Back Pressure

Options	
Blank	No Options
H	BSPP

Note: Other spring ranges, port sizes, and options available. Please consult factory

☐ Most popular.

Parker Hannifin Corporation
Pneumatic Division
Richland, Michigan
www.parker.com/pneumatics

Tel: +45 63 12 83 00 | Email: ps@hymatik.com | www.hymatik.com | Hvidkaervej 27a, DK-5250 Odense SV, Denmark

Material Specifications

Body and housing	Aluminum
Trim	Zinc plated steel, brass
Nozzle	Nitrile on dacron

Repair and Service Kits

0 to 200 psig, standard	**PS12127-1**
Tamper resistant kit	**PS12165**
Mounting bracket kit, zinc plated steel	**PS09921**

Mounting bracket

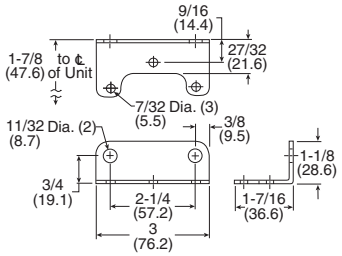

⚠ WARNING

Product rupture can cause serious injury.
Do not connect regulator to bottled gas.
Do not exceed Maximum primary pressure rating.

CAUTION:

REGULATOR PRESSURE ADJUSTMENT – The working range of knob adjustment is designed to permit outlet pressures within their full range. Pressure adjustment beyond this range is also possible because the knob is not a limiting device. This is a common characteristic of most industrial regulators, and limiting devices may be obtained only by special design. For best performance, regulated pressure should always be set by increasing the pressure up to the desired setting.

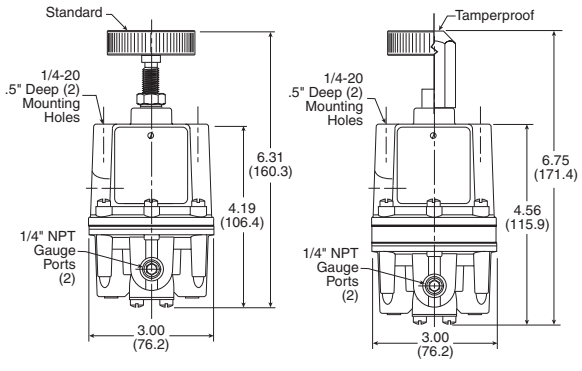

2 thru 200 PSIG Range **300 & 400 PSIG Range**

Flow Charts

P3RA102BP 1/4" Regulator

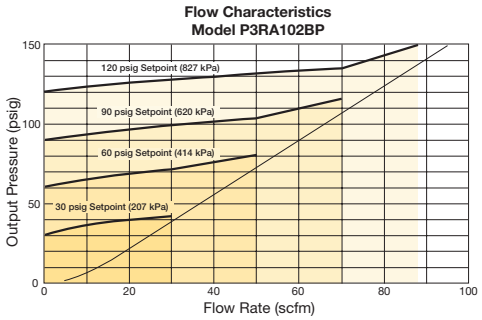

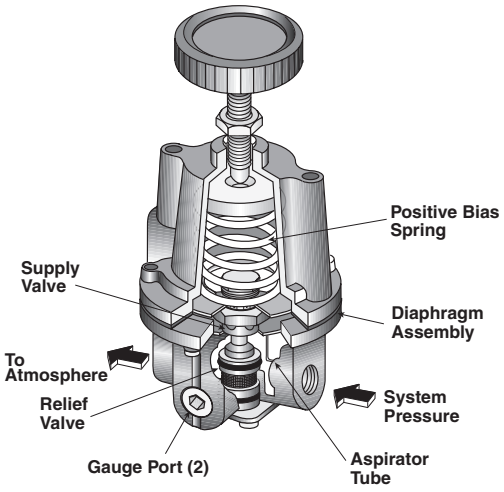

Operating Principles

The P3RA102BP Regulator uses the force balance principle to open the Relief Valve and vent system pressure when the set point is exceeded.

Downstream pressure is transmitted through the Aspirator Tube to the bottom of the Diaphragm Assembly. When you adjust the range screw for a specific set point, the Positive Bias Spring compresses and exerts a force on the top of the Diaphragm Assembly. As long as the pressure acting on the bottom of the Diaphragm Assembly produces a force less than the spring force acting on the top of the Diaphragm Assembly, the Relief Valve remains closed. When system pressure increases, the force on the bottom of the Diaphragm Assembly increases until it reaches the set point. When system pressure increases beyond the set point, the assembly moves upward, lifting the Relief Valve from its seat and vents the downstream air.

If downstream pressure decreases below the set point, the assembly moves downward closing the Relief Valve.

For inventory, lead times, and kit lookup, visit www.pdnplu.com

Parker Hannifin Corporation
Pneumatic Division
Richland, Michigan
www.parker.com/pneumatics

Tel: +45 63 12 83 00 | Email: ps@hymatik.com | www.hymatik.com | Hvidkaervej 27a, DK-5250 Odense SV, Denmark

P3RA171 High Precision Vacuum Regulator

The P3RA171 is a high accuracy vacuum regulator that provides uniform vacuum regulation independent of vacuum supply changes and flow demand.

This unit has a diaphragm assembly with three springs to provide a more balanced loading of the diaphragm.

- Control sensitivity of .125" (.005 PSIG) (.32 cm) water column allows use in precision applications
- Balanced supply valve minimizes effects of vacuum variation
- Aspirator tube compensates for downstream pressure droop under flow conditions
- Separate control chamber isolates the diaphragm from the main flow to eliminate hunting and buzzing
- Construction allows servicing without removing from the line



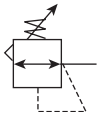

Port Size	Description	Part Number
1/4"	0 to 30 Hg	**P3RA17132NNKN**

Operating information

Vacuum supply:	29.92 Hg (760 torr) max
Ambient temperature:	-40°F to 200°F (-40°C to 93°C)
Sensitivity:	.125" (.005 psig) (.32 cm) water column
Flow capacity:	3 scfm @ 650 torr supply, 250 torr setpoint
Vacuum supply effect:	Less than 1 torr for 100 torr (.04 Hg for 3.94 Hg) change in vacuum supply

Ordering Information:

P3RA171 | 3 | 2 | N | N | K | N

Springs
0 to 30 Hg — 3

Pipe Size
1/4 inch — 2

Thread Type
NPT — N

Options
N — Nitrile

Options
K — Knob Assembly

Options
N — Non-Relieving

Note: Other spring ranges, port sizes, and options available. Please consult factory

☐ Most popular.

Tel: +45 63 12 83 00 | Email: ps@hymatik.com | www.hymatik.com | Hvidkaervej 27a, DK-5250 Odense SV, Denmark

Material Specifications

Body and housing	Aluminum
Trim	Zinc plated steel, brass
Elastomers	Nitrile

Repair and Service Kits

Service kits – (includes diaphragm assy, valve assy, seat assy & gasket) 0-30" Hg, nitrile, non-relieving	**PS20966-9**
Tamper resistant kit	**PS20967-1**
Mounting bracket	**PS09921**

Mounting bracket

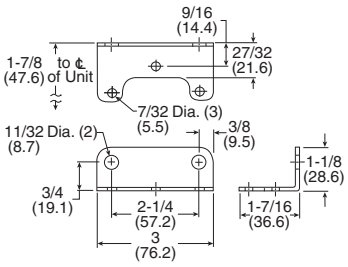

⚠ WARNING

Product rupture can cause serious injury.
Do not connect regulator to bottled gas.
Do not exceed Maximum primary pressure rating.

CAUTION:

REGULATOR PRESSURE ADJUSTMENT – The working range of knob adjustment is designed to permit outlet pressures within their full range. Pressure adjustment beyond this range is also possible because the knob is not a limiting device. This is a common characteristic of most industrial regulators, and limiting devices may be obtained only by special design. For best performance, regulated pressure should always be set by increasing the pressure up to the desired setting.

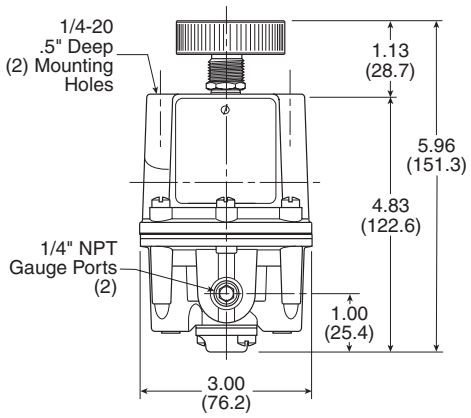

Flow Charts

P3RA171 1/4" Regulator

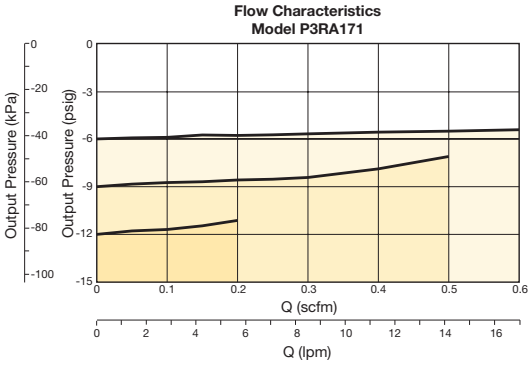

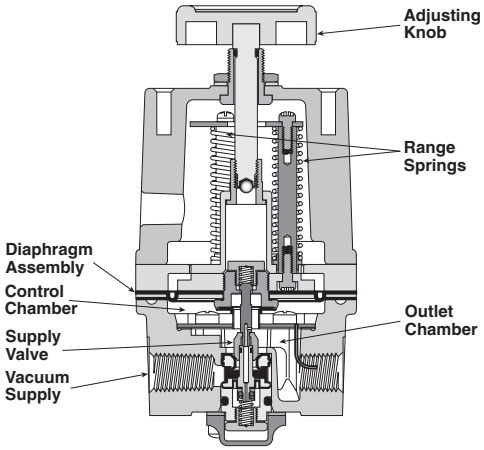

Operating Principles

The Model P3RA171 Series vacuum regulator uses the force balance principle to control the movement of the Valve Assembly that controls output vacuum.

When the regulator is adjusted for a specific set point, the upward force of the Range Springs moves the Diaphragm Assembly upward. The Supply Valve opens and allows air to pass to the inlet port. As the set point is reached, the upward force exerted by the Range Springs is balanced by the force of the vacuum that pulls downward on the Diaphragm Assembly. The resultant force moves the Supply Valve downward to reduce the flow of air to the inlet port. Outlet vacuum is maintained as a result of balance between forces acting on the top and bottom of the Diaphragm Assembly.

For inventory, lead times, and kit lookup, visit www.pdnplu.com

Parker Hannifin Corporation
Pneumatic Division
Richland, Michigan
www.parker.com/pneumatics

Tel: +45 63 12 83 00 | Email: ps@hymatik.com | www.hymatik.com | Hvidkaervej 27a, DK-5250 Odense SV, Denmark

P3EA632 Precision Filter / Regulators

- The no-brass construction is well suited to harsh environments
- Internal and external epoxy finish for superior corrosion resistance
- Non-bleed design to reduce consumption
- Integral relief valve
- A gauge port provides convenient pressure gauge mounting
- The standard 5-micron filter minimizes internal contamination
- The filter dripwell contains a drain plug to easily drain trapped liquids
- Standard tapped exhaust
- Soft relief seat minimizes air loss



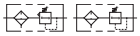

Port Size	Description	Part Number
1/4"	1 to 60 psig	**P3EA63242NS**
1/4"	2 to 120 psig	**P3EA63252NS**

Operating information

Supply pressure:	250 psig (17.2 bar), (1700 kPa) max
Temperature range:	-40°F to 160°F (-40°C to 71°C)
Sensitivity:	1.0" (.036 psig) (2.54 cm) water column
Flow capacity:	25 scfm (42.5 m^3/HR) @ 100 psig (7 bar), (700 kPa) supply and 20 psig (1.5 bar), (150 kPa) setpoint
Exhaust capacity:	0.8 scfm (1.36 m^3/HR) where downstream pressure is 5 psig, (.35 bar) (35 kPa) above 20 psig (1.5 bar), (150 kPa) setpoint (0.8 SCFM for 120 # unit)
Consumption:	Undetectable
Supply pressure effect:	Less than 1.25 psig (.09 bar), (9 kPa) change for 100 psig (7.0 bar), (700 kPa) change in supply pressure (1.90 psig for 120 # unit)

Ordering Information:

P3EA632 | **5** | **2** | **N** | **S** | ☐

Springs	
0 to 60 psig	4
2 to 120 psig	5

Pipe Size	
1/4 inch	2

Thread Type	
NPT	N
BSPP	U

Adjustment	
S	Screw (std)
K	Knob
T	Tamperproof

Options	
Blank	None

Note: Other spring ranges, port sizes, and options available. Please consult factory

☐ Most popular.

For inventory, lead times, and kit lookup, visit www.pdnplu.com

Parker Hannifin Corporation
Pneumatic Division
Richland, Michigan
www.parker.com/pneumatics

Tel: +45 63 12 83 00 | Email: ps@hymatik.com | www.hymatik.com | Hvidkaervej 27a, DK-5250 Odense SV, Denmark

Material Specifications

Body and housing	Epoxy coated Aluminum
Trim	Stainless steel, nickel plated steel
Elastomers	Nitrile

Repair and Service Kits

1 to 60, 2 to 120 psig	**PS19968-NR**
Tamper resistant kit	**PS12165**

⚠ WARNING

Product rupture can cause serious injury.
Do not connect regulator to bottled gas.
Do not exceed Maximum primary pressure rating.

CAUTION:

REGULATOR PRESSURE ADJUSTMENT – The working range of knob adjustment is designed to permit outlet pressures within their full range. Pressure adjustment beyond this range is also possible because the knob is not a limiting device. This is a common characteristic of most industrial regulators, and limiting devices may be obtained only by special design. For best performance, regulated pressure should always be set by increasing the pressure up to the desired setting.

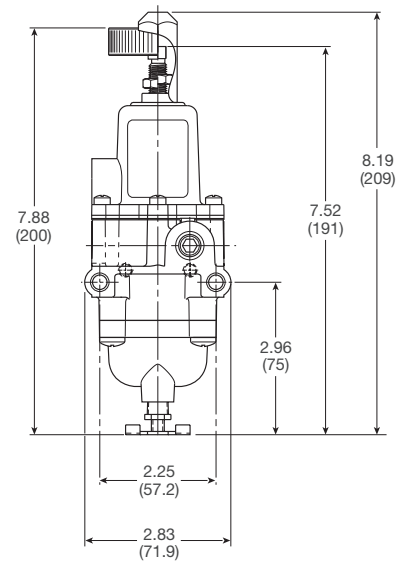

Inches (mm)

Flow Charts

P3EA632 1/4" Filter / Regulator

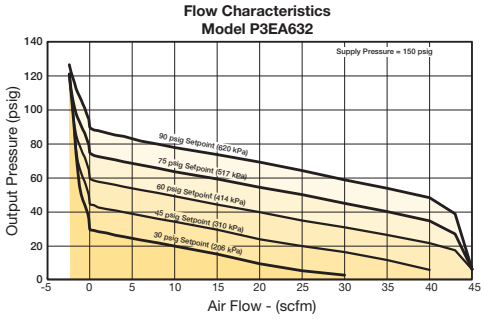

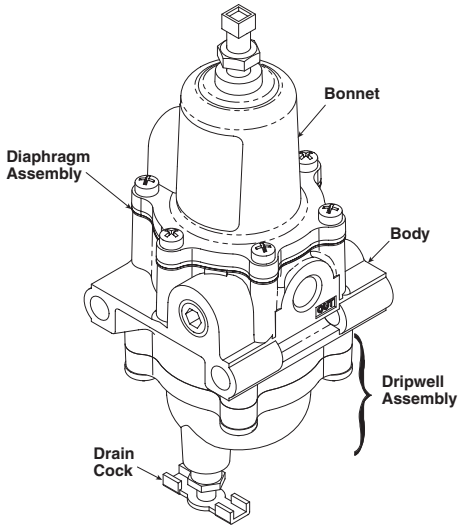

Operating Principles

When you turn the Adjustment Screw to a specific setpoint, the Spring exerts a downward force against the top of the Diaphragm Assembly. This downward force opens the Supply Valve. Output pressure flows through the Outlet Port and the passage to the Control Chamber where it creates an upward force on the bottom of the Diaphragm Assembly.

When the setpoint is reached, the force of the Spring that acts on the top of the Diaphragm Assembly balances with the force of output pressure that acts on the bottom of the Diaphragm Assembly and closes the Supply Valve.

When the output pressure increases above the setpoint, the Diaphragm Assembly moves upward to close the Supply Valve and open the Exhaust Valve. Output pressure flows through the Exhaust Valve and out of the Exhaust Vent on the side of the unit until it reaches the setpoint.

Tel: +45 63 12 83 00 | Email: ps@hymatik.com | www.hymatik.com | Hvidkaervej 27a, DK-5250 Odense SV, Denmark

P3BA208 Precision Pneumatic Input Signal Amplifier

- The P3BA208 uses a pneumatic input signal to accurately control output pressure based on a predetermined ratio
- A balanced supply valve minimizes the effects of supply pressure variation
- An aspirator tube compensates downstream pressure droop under flowing conditions
- A separate control chamber isolates the diaphragm from the main flow to eliminate hunting and buzzing
- Unit construction allows servicing without removal
- Mounting bracket available



Port Size	Description	Part Number
1/4"	1:1 pilot ratio	**P3BA20812**
1/4"	1:2 pilot ratio	**P3BA20822**
1/4"	1:3 pilot ratio	**P3BA20823**

Operating information

Signal : Output	1:1	1:2	1:3
Output pressure, maximum:	150 psig (10 bar)	150 psig (10 bar)	150 psig (10 bar)
Supply pressure, maximum:	250 psig (17 bar)	250 psig (17 bar)	250 psig (17 bar)
Flow capacity – 100 psig (7 bar), supply 20 psig, (1.5 bar) output	45 scfm (76.5 m^3/HR)	45 scfm (76.5 m^3/HR)	45 scfm (76.5 m^3/HR)
Exhaust capacity – Downstream pressure 5 psig (0.35 bar) above 20 psig (1.5 bar) setpoint	11 scfm (18.7 m^3/HR)	11 scfm (18.7 m^3/HR)	11 scfm (18.7 m^3/HR)
Sensitivity, water column:	0.250" (0.64 cm)	0.500" (1.27 cm)	0.750" (1.9 cm)
Ratio accuracy – % of 100 psig (7 bar) output span % of output span with 100 psig (7 bar) input span	1.0 —	1.0 —	1.0 —
Supply pressure effect – for change of 100 psig (7 bar)	0.10 psig (.007 bar)	0.20 psig (.014 bar)	0.30 psig (.021 bar)
Ambient temperature:	-40°F to 200°F (-40°C to 93°C)	-40°F to 200°F (-40°C to 93°C)	-40°F to 200°F (-40°C to 93°C)

Ordering Information:

P3BA208 **1** **2** ☐

Pilot Ratio	
1:1	1
1:2	2
1:3	3

Pipe Size	
1/4 inch	2

Options	
Blank	No Options
E	Tapped Exhaust
H	BSPP
I	By-Pass Valve

Note: Other spring ranges, port sizes, and options available. Please consult factory

☐ Most popular.

For inventory, lead times, and kit lookup, visit www.pdnplu.com

Parker Hannifin Corporation
Pneumatic Division
Richland, Michigan
www.parker.com/pneumatics

Tel: +45 63 12 83 00 | Email: ps@hymatik.com | www.hymatik.com | Hvidkaervej 27a, DK-5250 Odense SV, Denmark

Material Specifications

Body and housing	Aluminum
Diaphragm	Nitrile on dacron fabric
Trim	Zinc plated steel, brass

Repair and Service Kits

Mounting bracket	**PS09921**
1:1 Ratio	**PS19513-11**
1:1 Ratio w/ by-pass valve	**PS19513-11I**
1:2 Ratio	**PS19513-12**
1:3 Ratio	**PS19513-13**

Mounting bracket

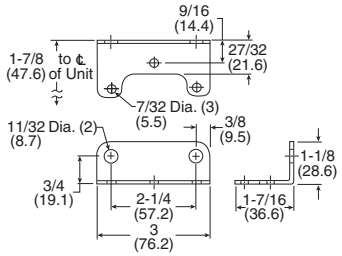

⚠ WARNING

Product rupture can cause serious injury.
Do not connect regulator to bottled gas.
Do not exceed Maximum primary pressure rating.

CAUTION:

REGULATOR PRESSURE ADJUSTMENT – The working range of knob adjustment is designed to permit outlet pressures within their full range. Pressure adjustment beyond this range is also possible because the knob is not a limiting device. This is a common characteristic of most industrial regulators, and limiting devices may be obtained only by special design. For best performance, regulated pressure should always be set by increasing the pressure up to the desired setting.

Flow Charts

P3RA102BP 1/4" Input Signal Amplifier

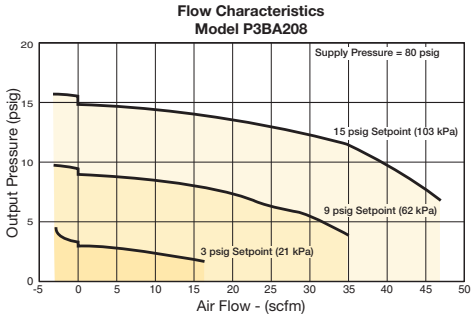

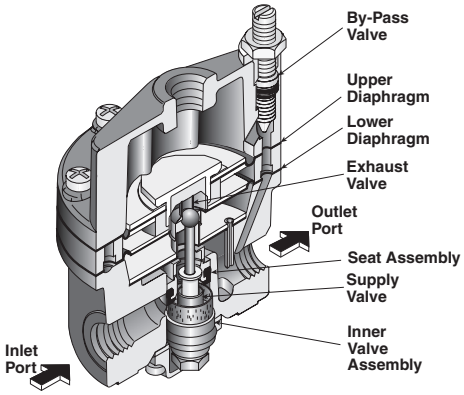

Operating Principles

The P3BA208 Input Signal Amplifier is a pneumatic device capable of high flow and exhaust capacity. This device uses a force balance system to control the movement of the supply and exhaust valves.

At set point, the force due to signal pressure that acts on the top of the Upper Diaphragm balances with the force due to output pressure acting on the bottom of the Lower Diaphragm.

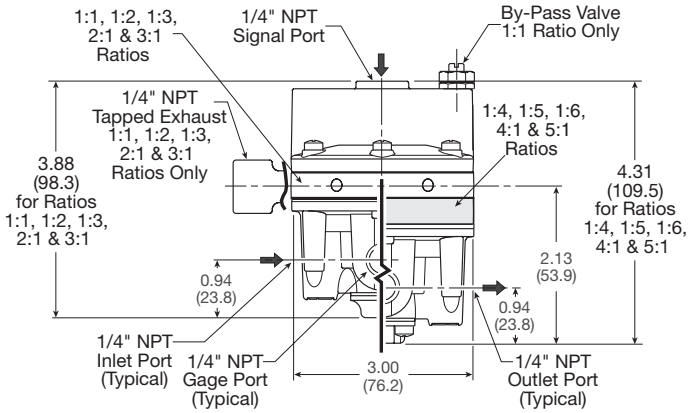

For inventory, lead times, and kit lookup, visit www.pdnplu.com

Parker Hannifin Corporation
Pneumatic Division
Richland, Michigan
www.parker.com/pneumatics

P3BA45 Precision Pneumatic Input Signal Amplifier

- Five signal to output ratios meet most control element requirements.
- Control sensitivity of water column allows use in precision applications.
- Large Supply and Exhaust Valves provide high forward and exhaust flows.
- Soft Supply and Exhaust Valve seats minimize air consumption.
- A balanced Supply Valve minimizes the effect of supply pressure variation.
- An Aspirator Tube compensates downstream pressure droop under flow conditions.
- A separate Control Chamber isolates the diaphragm from the main flow to eliminate hunting and buzzing.
- Unit construction lets you service the P3BA45 without removing it from the line.



Port Size	Description	Part Number
1/2"	1:1 pilot ratio	**P3BA4514A**
3/4"	1:1 pilot ratio	**P3BA4516A**

Operating information

Signal : Output	1:1	1:2	1:3
Output pressure, maximum:	150 psig (10 bar)	150 psig (10 bar)	150 psig (10 bar)
Supply pressure, maximum:	250 psig (17 bar)	250 psig (17 bar)	250 psig (17 bar)
Flow capacity – 100 psig (7 bar), supply 20 psig (1.5 bar) output	150 scfm (255 m^3/HR)	150 scfm (255 m^3/HR)	150 scfm (255 m^3/HR)
Exhaust capacity – Downstream pressure 5 psig (.35 bar) above 20 psig (1.5 bar) setpoint	40 scfm (62.5 m^3/HR)	40 scfm (62.5 m^3/HR)	40 scfm (62.5 m^3/HR)
Sensitivity, water column:	1.0" (2.54 cm)	2.0" (5.08 cm)	3.0" (7.62 cm)
Ratio Accuracy – % of 100 psig (7 bar) output span	3.0	3.0	3.0
% of output span with 100 psig (7 bar) input span	—	—	—
Supply pressure effect – for change of 100 psig (7 bar)	0.10 psig (0.007 bar)	0.20 psig (0.014 bar)	0.30 psig (0.021 bar)
Ambient temperature:	-40°F to 200°F (-40°C to 93°C)	-40°F to 200°F (-40°C to 93°C)	-40°F to 200°F (-40°C to 93°C)
Hazardous locations:	Acceptable for use in zones 1 and 2 for gas atmospheres; Groups IIA and IIB and zones 21 and 22 for dust atmospheres.		

Ordering Information:

P3BA45 **1** **4** **A** ☐

Pilot Ratio	
1:1	1
1:2	2
1:3	3

Pipe Size	
1/2 inch	4
3/4 inch	6

Type	
A	45 Series

Options	
Blank	No Options
E	Tapped Exhaust
H	BSPP
I	By-Pass Valve

Note: Other spring ranges, port sizes, and options available. Please consult factory

☐ Most popular.

For inventory, lead times, and kit lookup, visit www.pdnplu.com

Parker Hannifin Corporation
Pneumatic Division
Richland, Michigan
www.parker.com/pneumatics

Tel: +45 63 12 83 00 | Email: ps@hymatik.com | www.hymatik.com | Hvidkaervej 27a, DK-5250 Odense SV, Denmark

Precision Pneumatic Input Signal Amplifier

Material Specifications

Body and housing	Aluminum
Diaphragm	Nitrile on dacron fabric
Trim	Zinc plated steel, brass

Repair and Service Kits

1:1 ratio	**PS19549-1**
1:1 ratio w/ tapped exhaust	**PS19549-1E**
1:3 ratio	**PS19549-3**
1:2 ratio	**PS19549-2**
1:1 w/ tapped exhaust, I option	**PS19549-20E**

⚠ WARNING

Product rupture can cause serious injury.
Do not connect regulator to bottled gas.
Do not exceed Maximum primary pressure rating.

CAUTION:

REGULATOR PRESSURE ADJUSTMENT – The working range of knob adjustment is designed to permit outlet pressures within their full range. Pressure adjustment beyond this range is also possible because the knob is not a limiting device. This is a common characteristic of most industrial regulators, and limiting devices may be obtained only by special design. For best performance, regulated pressure should always be set by increasing the pressure up to the desired setting.

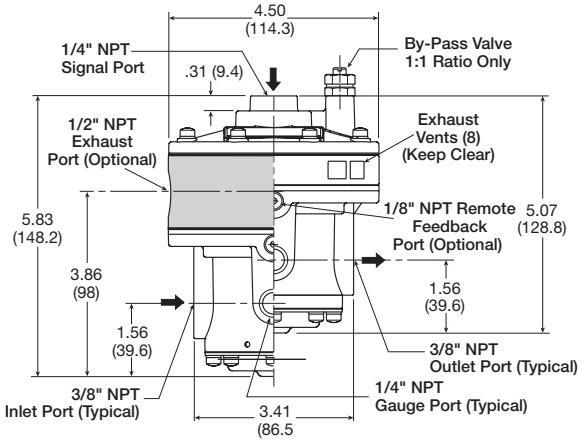

Inches (mm)

Flow Charts

P3BA45 1/2" & 3/4" Input Signal Amplifier

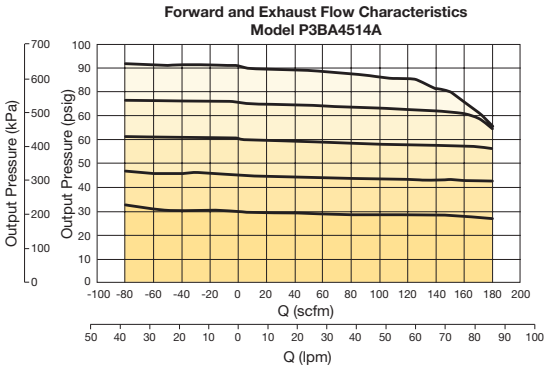

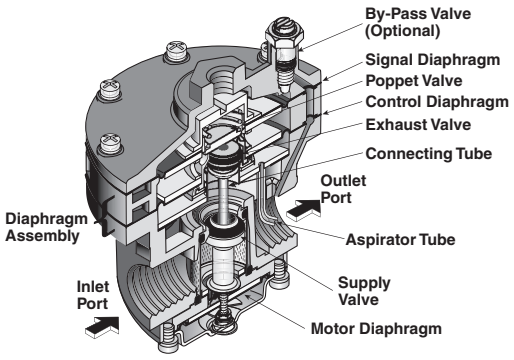

Operating Principles

When signal pressure on the top of the Signal Diaphragm creates a downward force on the Diaphragm Assembly, the Supply Valve opens. Output pressure flows through the Outlet Port and the Aspirator Tube to the Control Chamber to create an upward force on the bottom of the Control Diaphragm. When the setpoint is reached, the force of the signal pressure that acts on the top of the Signal Diaphragm balances with the force of the output pressure that acts on the bottom of the Control Diaphragm to close the Supply Valve.

When the output pressure increases above the signal pressure, the Diaphragm Assembly moves upward to close the Supply Valve and open the Exhaust Valve. Because the Poppet Valve is closed, pressure flows down the Connecting Tube to the bottom of the Motor Diaphragm. This pressure keeps the Supply Valve tightly closed while in the exhaust mode. The Poppet Valve opens and excess output pressure exhausts through the vent in the side of the unit until it reaches the setpoint.

Parker Hannifin Corporation
Pneumatic Division
Richland, Michigan
www.parker.com/pneumatics

Tel: +45 63 12 83 00 | Email: ps@hymatik.com | www.hymatik.com | Hvidkaervej 27a, DK-5250 Odense SV, Denmark

20R Regulators – Miniature Water

- Rugged brass body for water service
- Unbalanced poppet standard
- Diaphragm operated for fast response
- Non-rising adjusting knob
- Compact, 3.06 inch (77.79mm) high by 1.56 inch (36.69mm) wide.
- High Flow: 1.25 GPM
- 1/8:, 1/4" ports (NPT, BSPP)



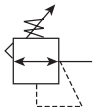

Port Size	Description	Part Number
1/8"	Without gauge	**20R013GC**
1/4"	Without gauge	**20R113GC**

NOTE: 1.25 Dia. (31.8 mm) hole required for panel mounting.

Operating information

Supply pressure (max):	0 to 300 psig (0 to 20.7 bar)
Secondary pressure ranges	
Standard	2 to 125 psig (0 to 8.6 bar)
Medium	1 to 60 psig (0 to 4.1 bar)
Medium	1 to 25 psig (0 to 1.7 bar)
Operating temperature:	32°F to 125°F (0°C to 52°C)
High flow:	1.25 GPM
Gauge ports (2):	1/8 inch
Weight:	0.5 lb (0.23 kg)

Ordering Information:

20R | **1** | **13** | **G** | **C** | ☐

Port Size	
1/8 inch	0
1/4 inch	1

Pressure Range	
25 psig	11
125 psig	13
60 psig	61

Relief	
F	Relieving
G	Non-Relieving

Engineering Level	
C	Current

Port Type	
Blank	NPT
1	BSPP

☐ Most popular.

Tel: +45 63 12 83 00 | Email: ps@hymatik.com | www.hymatik.com | Hvidkaervej 27a, DK-5250 Odense SV, Denmark

Material Specifications

Adjusting nut & stem	Steel
Body, valve poppet, bottom plug, diaphragm button	Brass
Bonnet, knob	Plastic
Seals, diaphragm	Buna N
Springs	Steel

Repair and Service Kits

Bonnet kit	**PCKR364Y**
Bonnet tamperproof kit	**PCKR364T**
Panel mount nut, aluminum	**R05X51-A**
Panel mount nut, plastic	**R05X51-P**
Mounting bracket kit	**SA161X57**
Relieving	**PRKR164Y**
Non-Relieveing	**PRKR163Y**

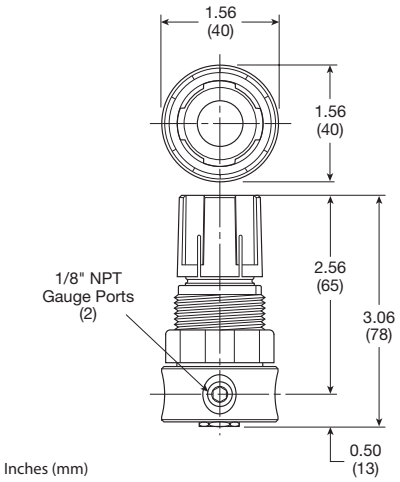

Flow Charts

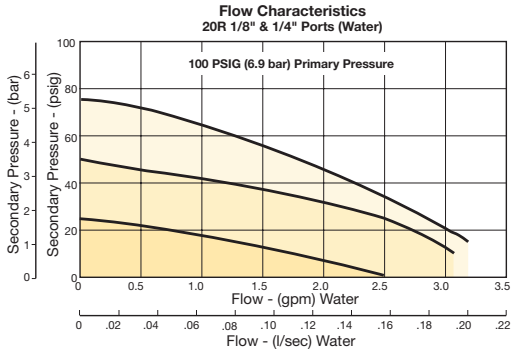

⚠ WARNING

Product rupture can cause serious injury.
Do not connect regulator to bottled gas.
Do not exceed Maximum primary pressure rating.

CAUTION:

REGULATOR PRESSURE ADJUSTMENT – The working range of knob adjustment is designed to permit outlet pressures within their full range. Pressure adjustment beyond this range is also possible because the knob is not a limiting device. This is a common characteristic of most industrial regulators, and limiting devices may be obtained only by special design. For best performance, regulated pressure should always be set by increasing the pressure up to the desired setting.

Tel: +45 63 12 83 00 | Email: ps@hymatik.com | www.hymatik.com | Hvidkaervej 27a, DK-5250 Odense SV, Denmark

R24 Regulators – Miniature Water

Water service

- Constructed with a combination of N.S.F. and F.D.A. compliant materials
- Lightweight plastic body
- Unbalanced poppet standard
- Non-rising, push-to-lock adjusting knob
- Compact, 3.10 Inch (79mm) high by 1.60 Inch (41mm) wide
- Lightweight
- Diaphragm operated
- 1/8", 1/4" ports (NPT)



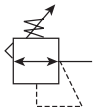

Port Size	Description	Part Number
1/8"	Non-Relieving, 0-125 Reduced Pressure, Without Gauge	**R24-01CK**
1/4"	Non-Relieving, 0-125 Reduced Pressure, Without Gauge	**R24-02CK**

NOTE: 1.250 Dia. (31.8 mm) hole required for panel mounting.

Operating information

Supply pressure (max):	Inlet 150 psig (10.0 bar)
Operating temperature:	40°F to 125°F (4°C to 52°C)
Gauge ports (2):	1/8 inch (can be used for full flow)
Weight:	0.25 lb (0.11 kg)

Ordering Information:

R24 – 02 C K

Type	
EPDM Elastomers	R25

Port Size	
1/8 inch	01
1/4 inch	02

Pressure Range	
A	0 to 25 psig (0 to 2 bar)
B	0 to 60 psig (0 to 4 bar)
C	0 to 125 psig (0 to 8 bar)

Relief	
K	Non-Relieving
P	Panel Mount Nut

☐ Most popular.

Tel: +45 63 12 83 00 | Email: ps@hymatik.com | www.hymatik.com | Hvidkaervej 27a, DK-5250 Odense SV, Denmark

Material Specifications

Adjusting screw	Steel
Body	Acetal
Bonnet and seat	Acetal
Diaphragm	EPDM
Seals	EPDM
Springs	Stainless steel
Valve poppet	EPDM

Repair and Service Kits

Panel mount nut, plastic	**R05X51-P**
Mounting bracket and nut	**SA161X57**
Relieving (EPDM)	**RKR24Y**
Non-Relieving (EPDM)	**RKR24KY**
0-25 psig spring	**SPR-375-1**
0-60 psig spring	**SPR-376**
0-125 psig spring	**SPR-377**
Tamperproof kit	**CKR364T**

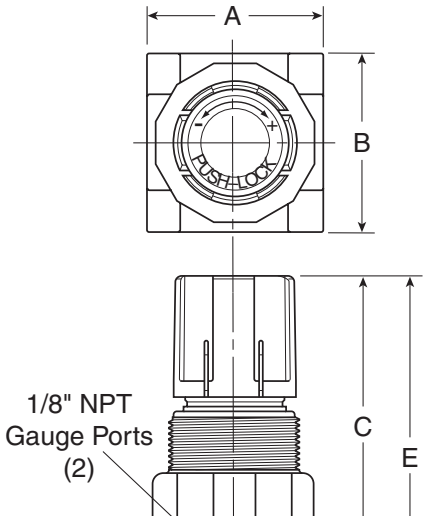

Flow Charts

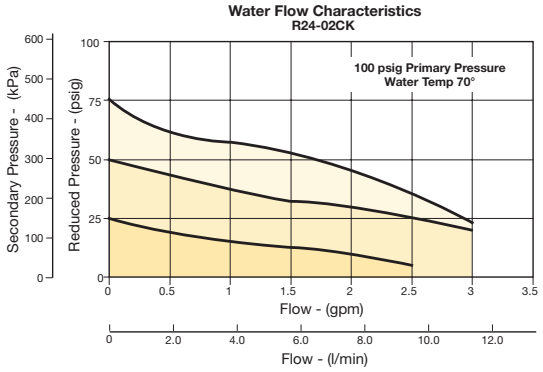

⚠ WARNING

Product rupture can cause serious injury.
Do not connect regulator to bottled gas.
Do not exceed Maximum primary pressure rating.

CAUTION:

REGULATOR PRESSURE ADJUSTMENT – The working range of knob adjustment is designed to permit outlet pressures within their full range. Pressure adjustment beyond this range is also possible because the knob is not a limiting device. This is a common characteristic of most industrial regulators, and limiting devices may be obtained only by special design. For best performance, regulated pressure should always be set by increasing the pressure up to the desired setting.

Tel: +45 63 12 83 00 | Email: ps@hymatik.com | www.hymatik.com | Hvidkaervej 27a, DK-5250 Odense SV, Denmark

R46 Regulators – Miniature Water

Water service

- Constructed with a combination of N.S.F. and F.D.A. compliant materials
- Lightweight plastic body
- Unbalanced poppet standard
- Non-rising, push-to-lock adjusting knob
- Compact, 3.43 inch (87.1mm) high by 2.06 inch (52.3mm) wide
- Lightweight
- Diaphragm operated
- 1/4", 3/8" ports (NPT)

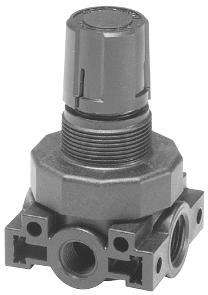

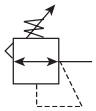

Port Size	Description	Part Number
1/4"	Non-Relieving, 0-125 Reduced Pressure, Without Gauge	**R46-02CK**
3/8"	Non-Elieving, 0-125 Reduced Pressure, Without Gauge	**R46-03CK**

NOTE: 1.250 Dia. (31.8 mm) hole required for panel mounting.

Operating information

Supply pressure (max):	Inlet 150 psig (10.0 bar)
Operating temperature:	40°F to 125°F (4°C to 52°C)
Gauge ports (2):	1/4 inch (can be used for full flow)
Weight:	0.38 lb (0.17 kg)

Ordering Information:

R46 – 02 C ☐

Type	
EPDM Elastomers	R46

Port Size	
1/4 inch	02
3/8 inch	03

Pressure Range	
A	0 to 25 psig (0 to 2 bar)
B	0 to 60 psig (0 to 4 bar)
C	0 to 125 psig (0 to 8 bar)

Relief	
K	Non-Relieving
P	Panel Mount Nut

☐ Most popular.

Material Specifications

Adjusting screw	Steel
Body	Acetal
Bonnet and seat	Acetal
Diaphragm	EPDM
Seals	EPDM
Springs	Stainless steel
Valve Poppet	EPDM

Repair and Service Kits

Panel mount nut, plastic	**R05X51-P**
Mounting bracket and nut	**SA161X57**
Relieving	**RKR45Y**
Non-Relieving	**RKR45KY**
0-25 psig spring	**SPR-46**
0-60 psig spring	**SPR-47**
0-125 psig spring	**SPR-48**

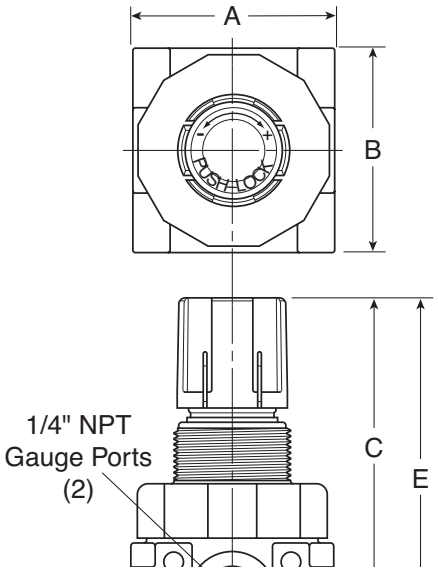

Flow Charts

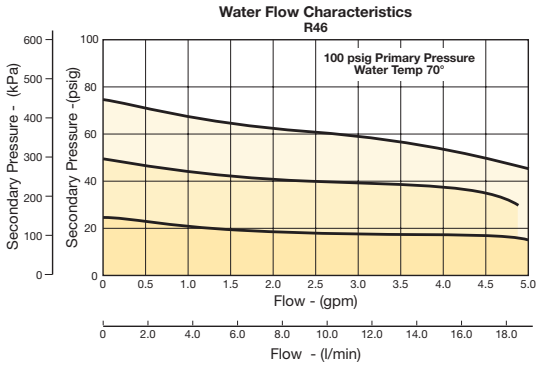

⚠ WARNING

Product rupture can cause serious injury.
Do not connect regulator to bottled gas.
Do not exceed Maximum primary pressure rating.

CAUTION:

REGULATOR PRESSURE ADJUSTMENT – The working range of knob adjustment is designed to permit outlet pressures within their full range. Pressure adjustment beyond this range is also possible because the knob is not a limiting device. This is a common characteristic of most industrial regulators, and limiting devices may be obtained only by special design. For best performance, regulated pressure should always be set by increasing the pressure up to the desired setting.

Tel: +45 63 12 83 00 | Email: ps@hymatik.com | www.hymatik.com | Hvidkaervej 27a, DK-5250 Odense SV, Denmark

Parker Hannifin Corporation
Pneumatic Division
Richland, Michigan
www.parker.com/pneumatics

Tel: +45 63 12 83 00 | Email: ps@hymatik.com | www.hymatik.com | Hvidkaervej 27a, DK-5250 Odense SV, Denmark





Air Preparation Products
Bulk Liquid Separators

P3TF L2-L5

Parker Hannifin Corporation
Pneumatic Division
Richland, Michigan
www.parker.com/pneumatics

Tel: +45 63 12 83 00 | Email: ps@hymatik.com | www.hymatik.com | Hvidkaervej 27a, DK-5250 Odense SV, Denmark

P3TF Bulk Liquid Separators

- Tested in accordance with ISO 8573.9
- High liquid removal efficiencies at all flow conditions
- Low pressure losses for low operational costs
- Suitable for variable flow compressors
- Low maintenance
- External surface epoxy painted for maximum corrosion resistance
- 1/4" to 3" ports (NPT, BSPP)



Applications

- Bulk liquid removal at any point in a compressed air system
- Protection of refrigeration and heatless regenerative desiccant dryers
- Liquid removal from compressor Inter-coolers / after-coolers
- Liquid separation within refrigeration dryers
- Pre-filtration

Pipe Size	Part Number (NPT)
1/4"	**P3TFA92WAAN**
3/8"	**P3TFA93WBAN**
1/2"	**P3TFA94WCAN**
3/4"	**P3TFA96WDAN**
1"	**P3TFA98WEAN**
1-1/2"	**P3TFA9BWGAN**
2"	**P3TFA9CWHAN**
3"	**P3TFA9EWKAN**

Pressure differential at rated flow ... 1.0 psid (0.07 bar)
Stated flows are for operation at 102 psig (7 bar) with reference to 68°F (20°C), 1 bar (a), 0% relative water vapor pressure.

Operating information

Operating pressure (max):		232 psig (16 bar)
Operating temperature:		35°F to 176°F (1.5°C to 80°C)
Pressure differential at rated flow:		1.0 psid (0.07 bar)
Flow:	1/4"	21 scfm (10 L/s)
	3/8", 1/2"	85 scfm (40 L/s)
	3/4", 1"	233 scfm (110 L/s)
	1-1/2", 2"	742 scfm (350 L/s)
	3"	1695 scfm (800 L/s)
Weight:	1/4"	1.3 lb (0.6 kg)
	3/8", 1/2"	2.4 lb (1.1 kg)
	3/4", 1"	4.8 lb (2.2 kg)
	1-1/2", 2"	11.2 lb (5.1 kg)
	3"	22.0 lb (10.0 kg)

Ordering Information:

P3TF **A** **9** **2WA** **A** **N**

Engineering Level	
Current	A

Thread Type	
BSPP	2
NPT	9

Port Size	
2WA	1/4"
3WB	3/8"
4WC	1/2"
6WD	3/4"
8WE	1"
BWG	1-1/2"
CWH	2"
EWK	3"

Drains Type	
A*	Auto Internal Float

* Models are supplied with auto drain as standard.

☐ Most popular.

Tel: +45 63 12 83 00 | Email: ps@hymatik.com | www.hymatik.com | Hvidkaervej 27a, DK-5250 Odense SV, Denmark

Inlet air pressure correction

psi	15	29	44	58	73	87	100	116	131	145	160	174	189	203	218	232
bar	1	2	3	4	5	6	7	8	9	10	11	12	13	14	15	16
Factor	4.00	2.63	2.00	1.59	1.33	1.14	1.00	0.94	0.89	0.85	0.82	0.79	0.76	0.73	0.71	0.68

Material Specifications

Automatic float drain	Plastic
Housing / bowl	Aluminum
Seals	Fluorocarbon

Repair and Service Kits

Drain kit	**EFI**

Flow

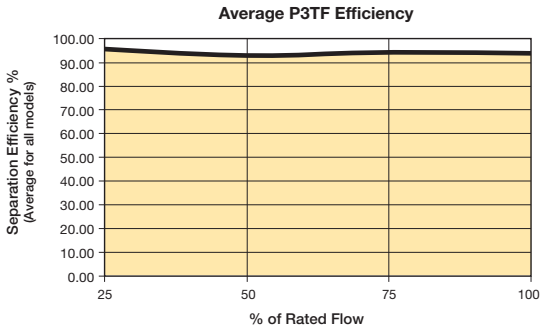

Operation

- Air enters the bulk liquid separator inlet and turns into the separator module.
- The inlet of the separator module contains a set of fixed vanes which the air must pass through.
- The vanes force the air to spin inside the vessel.
- The spinning air is then forced to change direction as it passes the impeller.
- A vortex is created which, due to the design of the separator module, narrows and intensifies as it reaches the lower part of the separator module.
- Bulk liquid is removed from the airstream due to:
  - directional changes of the airstream
  - velocity changes
  - centrifugal action of the vortex
- As the vortex reaches the bottom of the module, air is forced through the center of the vortex.
- Aerospace turning vanes, located in the outlet of the separator module, turn an inefficient corner into a number of more efficient corners.
- Turning vanes reduce turbulence, minimizing pressure loss and cost of ownership.
- The number of vanes required is dependent upon the conduit diameter.

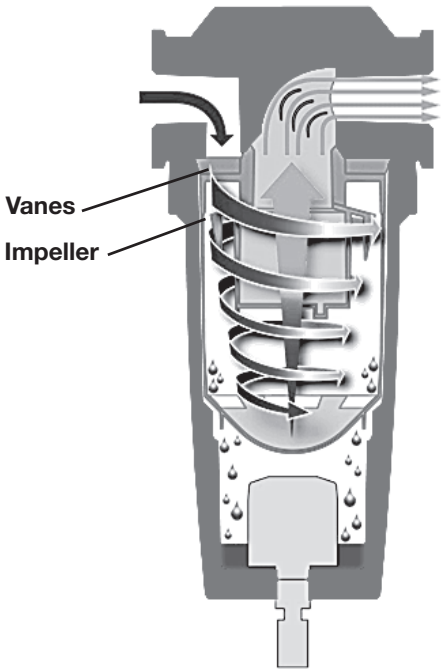

Tel: +45 63 12 83 00 | Email: ps@hymatik.com | www.hymatik.com | Hvidkaervej 27a, DK-5250 Odense SV, Denmark

P3TF (Bulk Liquid Separator)

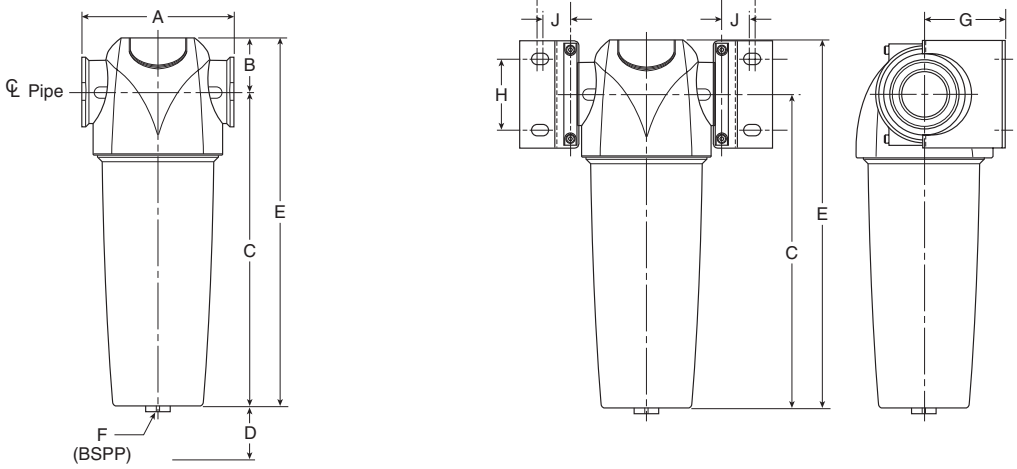

Dimensions

Part Number	Pipe size	A	B	C	D	E	BSPP F	G	H	J	K	Wall Mounting Bracket Kit
P3TFA92WAAN	1/4"	3.00 (76)	1.12 (28.5)	6.02 (153)	1.58 (40)	7.15 (181.5)	1/2	2.05 (50)	1.18 (30)	0.71 (18)	0.96 (24.5)	**P3TKA00MWA**
P3TFA93WBAN	3/8"	3.83 (97.5)	1.34 (34)	7.91 (201)	1.97 (50)	9.25 (235)	1/2	2.36 (60)	1.57 (40)	0.81 (20.5)	1.00 (25.5)	**P3TKA00MWB**
P3TFA94WCAN	1/2"	3.83 (97.5)	1.34 (34)	7.91 (201)	1.97 (50)	9.25 (235)	1/2	2.36 (60)	1.57 (40)	0.81 (20.5)	1.00 (25.5)	**P3TKA00MWB**
P3TFA96WDAN	3/4"	5.07 (129)	1.67 (42.5)	9.20 (232.5)	2.76 (70)	10.80 (275)	1/2	2.68 (68)	2.36 (60)	0.91 (23)	1.10 (28)	**P3TKA00MWD**
P3TFA98WEAN	1	5.07 (129)	1.67 (42.5)	12.68 (322)	2.76 (70)	14.35 (364.5)	1/2	2.68 (68)	2.36 (60)	0.91 (23)	1.10 (28)	**P3TKA00MWD**
P3TFA9BWGAN	1-1/2"	6.70 (170)	1.97 (50)	18.68 (474.5)	3.94 (100)	20.64 (524.5)	1/2	3.62 (92)	3.31 (84)	1.26 (32)	1.54 (39)	**P3TKA00MWF**
P3TFA9CWHAN	2"	6.70 (170)	1.97 (50)	18.68 (474.5)	3.94 (100)	20.64 (524.5)	1/2	3.62 (92)	3.31 (84)	1.26 (32)	1.54 (39)	**P3TKA00MWF**
P3TFA9EWKAN	3"	8.07 (205)	2.36 (60)	30.39 (772)	4.72 (120)	32.76 (832)	1/2	5.31 (135)	3.94 (100)	1.40 (35.5)	1.67 (42.5)	**P3TKA00MWJ**

Inches (mm)

Wall Mounting Bracket Kit
Mounting brackets provide additional support to filters installed in flexible piping systems or OEM equipment.



For inventory, lead times, and kit lookup, visit www.pdnplu.com

Parker Hannifin Corporation
Pneumatic Division
Richland, Michigan
www.parker.com/pneumatics

Tel: +45 63 12 83 00 | Email: ps@hymatik.com | www.hymatik.com | Hvidkaervej 27a, DK-5250 Odense SV, Denmark

P3TF Bulk Liquid Separators

- Designed in accordance with ASME and CRN
- High liquid removal efficiencies at all flow conditions
- Suitable for variable flow compressors
- Works with all types of compressor and compressor condensate
- External surface epoxy painted for maximum corrosion resistance
- 4" & 6" flange*
- Auto float drain standard, shipped loose



P3TF Series

Port Size	Part Number
4" Flange	**P3TFAFFW2AN**
6" Flange	**P3TFAFGW3AN**

* 150# Flange

Operating information

Operating Pressure:		15 to 232 psi (1 to 232 bar)
Operating Temperature:		35°F to 140°F (1.5°C to 60°C)
Flow capacity†:	4"	2100 scfm (991.1 dm^3/s, ANR)
	6"	3780 scfm (1783.9 dm^3/s, ANR)
Weight:	4"	180 lb (81.6 kg)
	6"	257 lb (116.6 kg)

† Stated flows at 100 psi (7 bar), 68°F (20°C), 0% relative water vapor pressure.

Material specifications

Baffle	Plated steel
Body	Steel
Deflector	Plated steel
Seals	Fluorocarbon
Stud	Plated steel

Repair and Service Kits

Auto float drain kit - 1/2" NPT	**HDF-120-NPT-A**

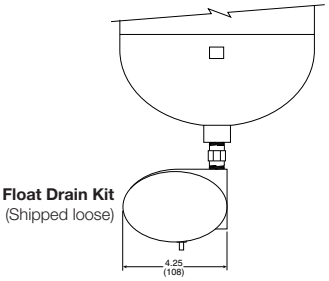

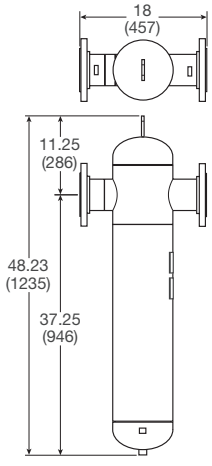

P3TFAFFW2AN

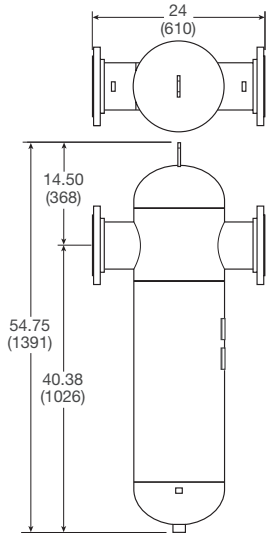

P3TFAFGW3AN

☐ Most popular.

For inventory, lead times, and kit lookup, visit www.pdnplu.com

Parker Hannifin Corporation
Pneumatic Division
Richland, Michigan
www.parker.com/pneumatics

Parker Hannifin Corporation
Pneumatic Division
Richland, Michigan
www.parker.com/pneumatics

Tel: +45 63 12 83 00 | Email: ps@hymatik.com | www.hymatik.com | Hvidkaervej 27a, DK-5250 Odense SV, Denmark







Air Preparation Products
Dryer Series

SPE / DRD Refrigeration	M2-M5
DD Disposable	M6
DD Inline Desiccant	M7-M8
TW Heatless Desiccant	M9-M12

Parker Hannifin Corporation
Pneumatic Division
Richland, Michigan
www.parker.com/pneumatics

Tel: +45 63 12 83 00 | Email: ps@hymatik.com | www.hymatik.com | Hvidkaervej 27a, DK-5250 Odense SV, Denmark

SPE / DRD Refrigeration Dryer Series





SPE010 - SPE0250

- "Plug & Play" design for easy installation and operation
- Small space saving design
- High reliability, easy to use and maintain
- All models equipped standard with a digital controller
  - controls integral timed drain
  - various warning and alarms
  - on/off indicator
- Drain has access from both sides
- Non cycling dryer

DRD325 - DRD2400

- Optimum dewpoint levels for highest system performance
- Advanced patented design solutions
- High reliability, easy to use and maintain
- Unique 4-in-1 SmartPack heat exchanger
- Integral drain
- Extremely low pressure drop design
- SmartControl energy saving function (cycling dryer)
- Excellent dewpoint performances
- Advanced compliant scroll compressor

Capacity SCFM @ 100 psig (m^3/min @ 6.9 bar)	Primary Voltage	Part Number	Pipe Size (NPT) ‡	Recommended Filtration		
				Bulk Separator	Pre-Filter (5µ particulate)*†	Post-Filter (.01µ coalescing w DPI)
10 (17)	115V/1 ph / 60 Hz	**SPE010-A11516016TIU**	1/2"	**P3TFA94WCAN**	**P32FB94QSAN ***	**P32FB94DSAN**
15 (26)	115V/1 ph / 60 Hz	**SPE015-A11516016TIU**	1/2"	**P3TFA94WCAN**	**P32FB94QSAN ***	**P32FB94DSAN**
25 (43)	115V/1 ph / 60 Hz	**SPE025-A11516016TIU**	1/2"	**P3TFA94WCAN**	**P32FB94QSAN ***	**P32FB94DSAN**
35 (60)	115V/1 ph / 60 Hz	**SPE035-A11516016TIU**	3/4"	**P3TFA96WDAN**	**P33FA96QSAN ***	**P33FA96DSAN**
50 (85)	115V/1 ph / 60 Hz	**SPE050-A11516016TIU**	3/4"	**P3TFA96WDAN**	**P33FA96QSAN ***	**P33FA96DSAN**
75 (127)	115V/1 ph / 60 Hz	**SPE075-A11516016TIU**	1"	**P3TFA98WEAN**	**P3YFA98ESAN**	**P3YFA98DSAN**
100 (170)	115V/1 ph / 60 Hz	**SPE0100-A11516016TIU**	1"	**P3TFA98WEAN**	**P3YFA98ESAN**	**P3YFA98DSAN**
125 (212)	115V/1 ph / 60 Hz	**SPE0125-A11516016TIU**	1"	**P3TFA98WEAN**	**P3YFA98ESAN**	**P3YFA98DSAN**
150 (255)	115V/1 ph / 60 Hz	**SPE0150-A11516016TIU**	1-1/2"	**P3TFA9BWGAN**	**P3NFA9PGSA †**	**P3NFA9PDSA**
175 (297)	115V/1 ph / 60 Hz	**SPE0175-A11516016TIU**	1-1/2"	**P3TFA9BWGAN**	**35F77BAP**	**35F77EAP**
175 (297)	230 V/1 ph / 60 Hz	**SPE0175-A23016016TIU**	1-1/2"	**P3TFA9BWGAN**	**35F77BAP**	**35F77EAP**
200 (340)	230 V/1 ph / 60 Hz	**SPE0200-A23016014TIU**	1-1/2"	**P3TFA9BWGAN**	**35F77BAP**	**35F77EAP**
250 (425)	230 V/1 ph / 60 Hz	**SPE0250-A23016014TIU**	1-1/2"	**P3TFA9BWGAN**	**35F77BAP**	**35F77EAP**
325 (552)	230V/3ph/60Hz & 460V/3ph/60Hz	**DRD325-A23036014EI** DRD325-A46036014EI	2" NPT-F	**P3TFA9CWHAN**	**35F87BAP**	**35F87EAP**
400 (680)	230V/3ph/60Hz & 460V/3ph/60Hz	**DRD400-A23036014EI** DRD400-A46036014EI	2" NPT-F	**P3TFA9CWHAN**	**35F87BAP**	**35F87EAP**
500 (849)	230V/3ph/60Hz & 460V/3ph/60Hz	**DRD500-A23036014EI** DRD500-A46036014EI	2" NPT-F	**P3TFA9CWHAN**	**35F87BAP**	**35F87EAP**
700 (1189)	230V/3ph/60Hz & 460V/3ph/60Hz	**DRD700-A23036014EI** DRD700-A46036014EI	3" NPT-M	**P3TFA9EWKAN**	**43FN7BAP**	**43FN7EAP**
800 (1359)	230V/3ph/60Hz & 460V/3ph/60Hz	**DRD800-A23036014EI** DRD800-A46036014EI	3" NPT-M	**P3TFA9EWKAN**	**43FN7BAP**	**43FN7EAP**
1000 (1700)	460V/3ph/60Hz	**DRD1000-A46036014EI**	3" NPT-M	**P3TFA9EWKAN**	**43FN7BAP**	**43FN7EAP**
1200 (2039)	460V/3ph/60Hz	**DRD1200-A46036014EI**	3" NPT-M	**P3TFA9EWKAN**	**43FN7BAP**	**43FN7EAP**
1600 (2718)	460V/3ph/60Hz	**DRD1600-A46036014EI**	4" Flg.	**P3TFAFFW2AN**	**P3TFAFFQ2AN***	**P3TFAFFD2AN**
2000 (3400)	460V/3ph/60Hz	**DRD2000-A46036014EI**	6" Flg.	**P3TFAFGW3AN**	**P3TFAFGQ3AN***	**P3TFAFGD3AN**
2400 (4078)	460V/3ph/60Hz	**DRD2400-A46036014EI**	6" Flg.	**P3TFAFGW3AN**	**P3TFAFGQ3AN***	**P3TFAFGD3AN**

‡ SPE010-025 are 1/2" NPT compatible. SPE035-0250 are manufactured with BSPP-F ports, but come standard with BSP to NPT adapter.
* 1µ coalescing
† 40 micron

☐ Most popular.

Parker Hannifin Corporation
Pneumatic Division
Richland, Michigan
www.parker.com/pneumatics

Tel: +45 63 12 83 00 | Email: ps@hymatik.com | www.hymatik.com | Hvidkaervej 27a, DK-5250 Odense SV, Denmark

The importance of compressed air as a provider of energy for modern industrial processes is widely known. What is often overlooked however is the need to provide quality treatment for this air.

In fact, the air entering the system contains condensate which, when cooled, will turn into liquid water, causing extensive damage not only to the compressed air network, but also to the finished product.

DRD refrigeration dryers actively remove this condensate to achieve extremely dry compressed air.

Our SmartPack heat exchanger offers minimal pressure drops and class leading performance, and significantly increases the efficiency of the whole compressed air treatment process. The innovative SmartControl function automatically and continuously adjusts dryer operation to the effective working conditions, minimizing operating costs and maximizing performances.

Compressed air purification equipment must deliver uncompromising performance and reliability while providing the right balance of air quality with the lowest cost of operation. Many manufacturers offer products for the filtration and purification of contaminated compressed air, which are often selected only upon their initial purchase cost, with little or no regard for the air quality they provide, the cost of operation throughout their life or their environmental impact. When purchasing purification equipment, delivered air quality, the overall cost of ownership and the equipment's environmental impact must always be considered.



Smart technology: the benefits

SmartPack heat exchanger provides less than 2 PSI pressure drop

The SmartPack (patent pending) heat exchanger features an extremely robust, all-in-one aluminum design, with no interconnecting tubing.

The geometry of the heat exchanger has been designed in order to optimize its performances. In particular, large volumes allow low air velocity through the heat exchanger section, resulting in high exchange efficiency and low pressure drops. Pressure drops are further improved thanks to the absence of interconnecting pipes through the different sections of the heat exchanger and to a straight forward path of the compressed air flow with smooth and minimum changes of flow directions.

Smart BMS interface

- Simple BMS interface includes:
- RS485 serial card provides direct communication to Modbus. Requires no gateway or A.N.I.
- Provides visualization of dewpoint, alarm conditions and service indication
- Provides remote control of the dryer including on/off and alarm reset (depending on actual alarm)

SmartDrain - Dual mode zero air loss drain

The drainage chamber is integrated into the heat exchanger while the valve mechanism is fitted in an easily accessible drain niche. The SmartDrain continuously adjusts itself to the actual working conditions, ensuring zero air loss and a notable reduction in system power consumption.

An innovative control system continuously monitors for fault situations. If a fault does occur, an alarm is signaled and the drain switches to conventional timed solenoid drain operation. The dual mode circuitry ensures maximum reliability.

Smart control with SmartSave cycling

The multifunction SmartControl provides a versatile platform for user interface and SmartSave Cycling (if enabled). The innovative SmartSave (patent pending)

Cycling Control continuously monitors the demand placed on the dryer. At conditions of low demand the refrigerant compressor is cycled off to save energy. A sophisticated algorithm continuously adapts the operation of the dryer for optimum energy efficiency while minimizing the dewpoint spikes common to traditional thermal mass dryers.

Compliant scroll compressors

These units feature Compliant Scroll compressors, offering energy savings of 20 -30% when compared with piston compressors. The ability to tolerate liquid returns coupled with 50% less moving parts render them nearly indestructible and highly reliable. Low vibration levels increase overall refrigeration circuit

Tel: +45 63 12 83 00 | Email: ps@hymatik.com | www.hymatik.com | Hvidkaervej 27a, DK-5250 Odense SV, Denmark

Operating information

Dryer Models	Dewpoint	Operating pressure		Operating temperature		Ambient maximum	Electrical supply	Thread	Noise level bB(A)	Refrigerant type
		Min	Max	Min	Max					
SPE010 - SPE050	ISO 8573-1 Class 5	29 psig (2 bar)	232 psig (16 bar)	41°F (5°C)	149°F (65°C)	122°F (50°C)	115V 1ph 60 Hz	NPT	<75	R134a
SPE075 - SPE0175										
SPE0200 - SPE0250			203 psig (14 bar)				230 1ph 60 Hz			

Controller Functions

Dryer Models	Power on indication	Visual fault indication	Compressed air temperature	Dryer service indicator	Fault relay power loss
SPE010-0250	X	X	X	X	X

Quality Assurance / IP Rating / Pressure Vessel Approvals

Development/Manufacture ISO 9001 / ISO 14001
Ingress Protection Rating IP22 Indoor Use Only

Product Selection and Correction Factors

Capacities are based upon: Ambient temperature - 100°F (38°C); inlet temperature - 100°F (38°C); and working pressure - 100 psig (7 bar g)

Minimum Drying Capacity = System flow x CFIT x CFATx CFMIP

NOTE: Flowrate, temperatures, and pressure MUST be provided by customer.

Example: 50 scfm flowrate Inlet temperature - 100°F (38°C) = 1.0
Max ambient temperature - 110°F (43°C) = 1.08
Min inlet pressure - 80°F (27°C) = 1.09

50 (1.0) + 1.08 + 1.09 = 59, therefore, a larger 75 scfm dryer is required

	SPE010 - SPE0250											DRD325 - DRD2400						
CFIT - Correction factor minimum inlet temperature																		
°F	90	95	100	110	120	130	140	149				90	100	110	120	130	140	
°C	32	35	38	43	49	54	60	65				32	38	43	49	54	60	
Factor	0.74	0.82	1.00	1.33	1.76	2.38	2.60	2.67				1.22	1.00	0.82	0.68	0.56	0.46	
CFAT - Correction factor maximum ambient temperature																		
°F	60	70	80	90	95	100	110	120	122			70	80	90	100	110	120	122
°C	16	21	27	32	35	38	43	49	50			21	27	32	38	43	49	50
Factor	0.93	0.93	0.93	0.93	0.96	1.00	1.08	1.16	1.18			1.22	1.15	1.05	1.00	0.94	0.79	0.71
CFMIP - Correction factor minimum inlet pressure																		
psig	45	60	80	100	125	145	150	160	175	200	232	60	80	100	125	150	174	203
bar	3	4	6	7	9	10	10	11	12	14	16	3	6	7	9	10	12	14
Factor	1.40	1.17	1.09	1.00	0.88	0.83	0.82	0.81	0.79	0.75	0.71	0.83	0.93	1.00	1.07	1.12	1.15	1.18

Dimensions	Part Number	A width	B height	C depth	Weight (kg)
SPE010-SPE0250	**SPE010-A11516016TIU**	11.8 (300)	20.5 (520)	15.7 (400)	53 (24)
	SPE015-A11516016TIU	11.8 (300)	20.5 (520)	15.7 (400)	53 (24)
	SPE025-A11516016TIU	11.8 (300)	20.5 (520)	15.7 (400)	55 (25)
	SPE035-A11516016TIU	13.0 (330)	22.8 (580)	21.7 (550)	77 (35)
	SPE050-A11516016TIU	13.0 (330)	22.8 (580)	21.7 (550)	79 (36)
	SPE075-A11516016TIU	15.7 (400)	25.6 (650)	24.8 (630)	101 (46)
	SPE0100-A11516016TIU	15.7 (400)	25.6 (650)	24.8 (630)	101 (46)
	SPE0125-A11516016TIU	15.7 (400)	25.6 (650)	24.8 (630)	104 (47)
	SPE0150-A11516016TIU	15.7 (400)	25.6 (650)	24.8 (630)	117 (53)
	SPE0175-A11516016TIU	15.7 (400)	25.6 (650)	24.8 (630)	121 (55)
	SPE0175-A23016016TIU	15.7 (400)	25.6 (650)	24.8 (630)	121 (55)
	SPE0200-A23016014TIU	17.7 (450)	33.1 (840)	30.7 (780)	176 (80)
	SPE0250-A23016014TIU	17.7 (450)	33.1 (840)	30.7 (780)	176 (80)

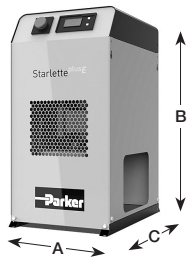

Inches (mm)

☐ Most popular.

For inventory, lead times, and kit lookup, visit www.pdnplu.com

Parker Hannifin Corporation
Pneumatic Division
Richland, Michigan
www.parker.com/pneumatics

Dimensions	Part Number	A width	B height	C depth	Weight (kg)
DRD325-DRD2400	**DRD325-A23036014EI**	28.0 (711)	42.0 (1067)	41.0 (1041)	320 (145)
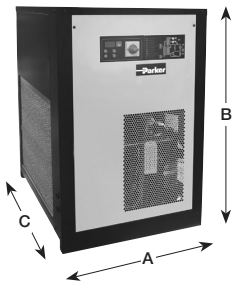	**DRD400-A23036014EI**	28.0 (711)	42.0 (1067)	41.0 (1041)	320 (145)
	DRD500-A23036014EI	28.0 (711)	42.0 (1067)	41.0 (1041)	342 (155)
	DRD700-A23036014EI	32.0 (813)	52.0 (1321)	46.0 (1168)	529 (240)
	DRD800-A23036014EI	32.0 (813)	52.0 (1321)	46.0 (1168)	529 (240)
	DRD1000-A46036014EI	32.0 (813)	52.0 (1321)	46.0 (1168)	551 (250)
	DRD1200-A46036014EI	40.0 (1016)	67.0 (1702)	43.0 (1092)	816 (370)
	DRD1600-4A6036014EI	40.0 (1016)	68.0 (1727)	71.0 (1803)	1279 (580)
	DRD2000-A46036014EI	40.0 (1016)	68.0 (1727)	71.0 (1803)	1477 (670)
Inches (mm)	**DRD2400-A46036014EI**	40.0 (1016)	68.0 (1727)	71.0 (1803)	1521 (690)

Most popular.

Parker Hannifin Corporation
Pneumatic Division
Richland, Michigan
www.parker.com/pneumatics

Tel: +45 63 12 83 00 | Email: ps@hymatik.com | www.hymatik.com | Hvidkaervej 27a, DK-5250 Odense SV, Denmark

DD10 Mini Disposable Dryer

Mini disposable inline desiccant dryer – DD10

Used at the point-of-use, this disposable, mini inline desiccant dryer removes all traces of water vapor, oil vapor and dirt. It is often used directly upstream of blow guns or spray guns as final protection for critical parts blow off and paint spraying. Install in either direction; it functions in both directions.

A 40 micron, porous bronze element removes fine dirt particles, an oil removing media removes oil vapor, and desiccant beads adsorb water vapor. The see-through housing shows desiccant color change from the original orange to a green color in the desiccant beads, which indicates that the dryer needs to be replaced.

Features

- Polycarbonate material allows clear desiccant visibility
- Disposable
- Used for parts blow off
- Protection for paint guns
- Non-toxic desiccant standard
- 1/4" port (NPT)

Non-metalic material is highly resistant to chemicals.

See through housing shows color change when dryer needs replacement.

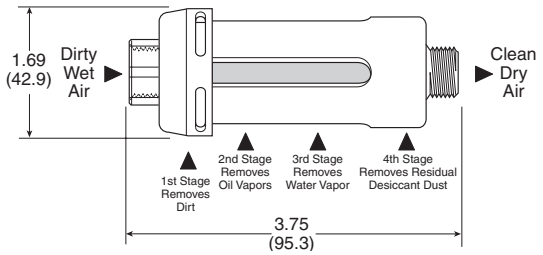



DD10-02

Operating information

Operating temperature: Maximum	32°F to 130°F (0°C to 54°C) 130°F (54°C)
Flow capacity:	15 scfm (7.1 dm^3/s, ANR)
Pressure rating (max.):	125 psig (8.6 bar)
Weight:	2.8 oz (79.4 g)

Installation

The DD10 is equipped with a 1/4" NPT (F) and (M) ports and can be installed in either direction. When installing the filter/dryer hand tighten to a leak proof seal. Do not use any mechanical means to hold the filter/dryer and do not over torque the threads.

Operation

1. The unique feature of the filter/dryer design allows you to visually see when it is time to install a new DD10 by observing the color change from the original orange color to a complete green color in the desiccant beads.
2. Do not attempt to clean the filter/dryer as the use of solvents, ketones, etc., will adversely affect the plastic housing.
3. Keep the hose free of snags. Extra tension on the filter/dryer assembly could break the unit at the connecting ports. To clear stuck hoses, grasp hose below the filter/dryer.

Parker Hannifin Corporation
Pneumatic Division
Richland, Michigan
www.parker.com/pneumatics

Tel: +45 63 12 83 00 | Email: ps@hymatik.com | www.hymatik.com | Hvidkaervej 27a, DK-5250 Odense SV, Denmark

DD Inline Desiccant Dryers

- Inline desiccant dryers are a convenient and cost effective means of ensuring your sensitive intermittent pneumatic applications are never exposed to damaging moisture
- Compact size for point-of-use applications
- Drying efficiency down to -40°F pressure dew point
- Easily and quickly serviced
- Sight glass in bowl to monitor desiccant
- Built-in particulate after filter prevents downstream dust
- No electricity needed
- Low pressure drop
- No purge air lost as with other dryer types
- Check valve required on inlet
- Desiccant must be ordered separately



Inline Desiccant Dryers

	Part Number scfm / desiccant Capacity [1]		
Port Size	15 scfm / 2.5 lb.	30 scfm / 5 lbs.	60 scfm / 10 lbs.
1/4 [2]	**DD15-02**		
3/8 [2]	**DD15-03**		
1/2 [2]	**DD15-04**	**DD30-04**	**DD60-04**
3/4	**DD15-06**	**DD30-06**	**DD60-06**
1		**DD30-08**	**DD60-08**

Notes:
1. Desiccant must be ordered separately.
2. These units supplied with reducer bushings.

Operating information

Optimum working temperature:	Below 100°F
Operating temperature:	32°F to 180°F (0°C to 82°C)
Operating pressure (max.):	0 to 300 psig (21 bar)
Filter element rating:	
DD15, DD30	90 micron
DD60	40 micron
Desiccant capacity:	
DD15	2.5 lb. (1.1 kg)
DD30	5 lb. (2.3 kg)
DD60	10 lb. (4.5 kg)
Weight:	
DD15 (add 2.5 lb for weight full)	8 lb. (3.6 kg)
DD30 (add 5 lb for weight full)	13 lb. (5.9 kg)
DD60 (add 10 lb for weight full)	20 lb. (9.1 kg)

Installation tips

- Always place a moisture separator / particulate filter to remove bulk moisture and a coalescing filter to remove oil upstream of desiccant dryer. Desiccant coated with oil will not adsorb water vapor.
- Automatic drains should be used in prefilters
- A spring ball check valve should be installed at the dryer inlet to maximize the life of the desiccant.

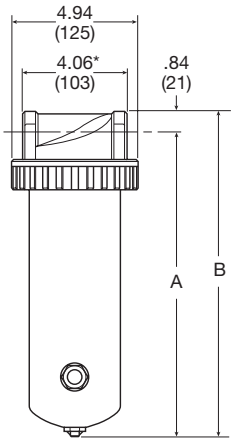

	A	B
DD15	12.69 (322)	13.5 (343)
DD30	22.44 (570)	23.25 (591)
DD60	29.44 (748)	30.25 (768)

* Dimension does not include reducer bushings for 1/4", 3/8", 1/2" versions.

Inches (mm)

Most popular.

For inventory, lead times, and kit lookup, visit www.pdnplu.com

Parker Hannifin Corporation
Pneumatic Division
Richland, Michigan
www.parker.com/pneumatics

Tel: +45 63 12 83 00 | Email: ps@hymatik.com | www.hymatik.com | Hvidkaervej 27a, DK-5250 Odense SV, Denmark

As the wet compressed air enters through the inlet, the air travels down through the bed of desiccant which adsorb the water vapor and aerosols. The silica gel desiccant beads will reduce the humidity down to a -40°F pressure dew point. After the moisture has been removed, the dry air passes through a sintered bronze filter element (eliminating dust downstream), up the tube and out the outlet port.

As the desiccant becomes saturated with moisture, the dew point will begin to rise. This is evident when the orange silica gel desiccant beads in the sight glass change to green, indicating the need for desiccant replacement. Simply remove the flange and bowl and replace with new desiccant or regenerate saturated desiccant by heating to 275°F.

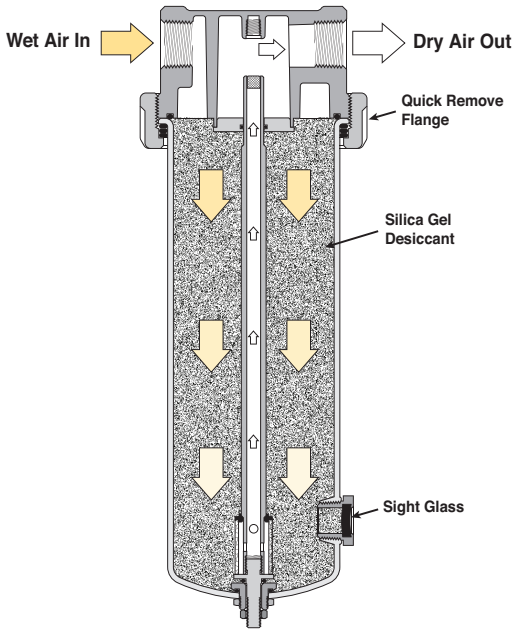

Material specifications

Bowl, DD15	Aluminum
Bowl, DD30	Aluminum
Bowl, DD60	Steel
Flow tube	CPVC
Filter element	Sintered bronze
Head & flange ring	Zinc
Other hardware	Brass
Seals	Buna-N
Sight glass	Glass & steel

Repair and Service Kits

Desiccant - 100% Indicating silica gel, DD15	**DRP-14-447/003**
Desiccant - 100% Indicating silica gel, DD30	**DRP-14-447/006**
Desiccant - 100% Indicating silica gel, DD60	**DRP-14-447/012**
Mounting brackets (pair of pipe mounted brackets), 1 inch pipe size	**SA200CW57**
Flow tube repair kit (tube, filter element(s), adaptor), DD15	**RKDD15-02-06**
Flow tube repair kit (tube, filter element(s), adaptor), DD30	**RKDD30-03-08**
Flow tube repair kit (tube, filter element(s), adaptor), DD60	**RKDD60-03-08**
Mounting brackets (DD15 & DD30 only) – 1 inch pipe size (pair of pipe mounted brackets)	**SA200CW57**
1/4 inch NPT, spring check valve for inlet (250 psig max.)	**003393001**
3/8 inch NPT, spring check valve for inlet (250 psig max.)	**003393002**
1/2 inch NPT, spring check valve for inlet (250 psig max.)	**003393003**
3/4 inch NPT, spring check valve for inlet (250 psig max.)	**003393004**

Tel: +45 63 12 83 00 | Email: ps@hymatik.com | www.hymatik.com | Hvidkaervej 27a, DK-5250 Odense SV, Denmark

TW Heatless Desiccant Air Dryer

Parker TW Series Heatless Desiccant Air Dryers remove water vapor from compressed air through a process known as pressure swing adsorption. Pressure dewpoints of -40°F (-40°C) standard are attained by directing the flow of saturated compressed air over a bed of desiccant.



Features

Allen-Bradley® PLC
- Two year dryer warranty (parts and labor)
- 4 line display
- NEMA 4X enclosure
- Selectable cycles

Switching Valves
- Five year switching valve warranty from manufacturer's defects (see warranty policy)

Factory Installed Filtration
- Single point connection for system integrity
- Differential pressure gauges for element condition
- Filter drains

Regulated Purge
- Factory set
- Optimum purge regardless of operating pressure
- Repressurization circuit

Operating information

Inlet or ambient air temperature:	50°F to 120°F (10°C to 49°C) maximum
Operating pressure:	80 psig (5.5 bar) minimum
Working pressure:	150 psig (10.5 bar) maximum
Pressure drop at rated flow:	less than 5 PSI (0.34 bar)
Primary voltage:	120V/1ph/60Hz

Heatless Desiccant Air Dryers, Filtration comes with Dryer unit as standard.

Part Number	Capacity SCFM @ 100 psig	Approximate Purge scfm	Dryer Air Port in/out (NPT)	Pre-Filter	After-Filter
TW41BN14NNN	40	6	1/2"	AAP015CFNI	AOP015CNFI
TW56BN14NNN	55	8	3/4"	AAP020DFNI	AOP020DNFI
TW76BN14NNN	75	11	3/4"	AAP025DNFI	AOP025DNMI
TW101BN14NNN	100	15	1"	AAP025ENFI	AOP025ENMI
TW131BN14NNN	130	20	1"	AAP025ENFI	AOP025ENMI
TW201BN14NNN	200	30	1-1/2"	AAP030GNFI	AOP030GNMI
TW251BN14NNN	250	38	1/1/2"	AAP035GNFI	AOP035GNMI
TW301BN14NNN	300	45	1-1/2"	AAP035GNFI	AOP035GNMI
TW401BN14NNN	400	60	2"	AAP040HNFI	AOP040HNMI
TW501BN14NNN	500	75	2"	AAP045INFI	AOP045INMI
TW601BN14NNN	600	90	2"	AAP045INFI	AOP045INMI
TW801BN14NNN	800	120	2"	AAP050INFI	AOP050INMI

Tel: +45 63 12 83 00 | Email: ps@hymatik.com | www.hymatik.com | Hvidkaervej 27a, DK-5250 Odense SV, Denmark

LED Din Connectors

- Easy to maintain and service
- Valve(s) may be serviced without opening electrical enclosure
- No hard wiring required
- Visual indication of valve activation
- Valve labeling



Additional Features

- Separate tower pressure gauges
- OSHA approved mufflers with safety relief
- ASME/CRN vessels (TW101 and larger)
- Desiccant fill and drain ports
- Safety relief valves
- Stainless steel diffuser screens
- CycleLoc® demand control
- Control air line filter
- ETL listed (UL/CSA standards)
- LED din connector(s) all solenoid valves
- 120 VAC power (other options available - consult factory)
- Power cord with basic controller
- Power din connector with advanced controller
- Power On/Off switch with advanced controller
- Steel base TW1001 and larger

Options

- PowerLoc Energy Demand Control (TW41 - TW801) optional
- All NEMA classifications
- Control air tubing - stainless steel
- Low ambient package (-20°F to +40°F air temperature)
- Instrumentation
- Locally mounted pressure and temperature gauges at inlet and outlet
- Pneumatic controls
- ASME B31.3 piping
- Corrosion allowance
- High pressure applications: 200 psig design & 250 psig design adders are available

System Integrity

Parker TW Series Heatless Desiccant Air Dryers remove water vapor from compressed air through a process known as Pressure Swing Adsorption. Pressure dewpoints ranging from -40°F (-40°C) are attained by directing the flow of saturated compressed air over a bed of desiccant.

The most commonly used desiccant is activated alumina, a spherical shaped, hygroscopic material, selected for its consistent size, shape and extreme surface to mass ratio. This physically tough and chemically inert material is contained in two separate but identical pressure vessels commonly referred to as “dual” or “twin” towers.

As the saturated compressed air flows up through the “on-line” tower, its moisture content adheres to the surface of the desiccant. The dry compressed air is then discharged from the chamber into the distribution system.

An Allen-Bradley® PLC controller automatically cycles the flow of compressed air between the towers while the “on-line” tower is drying, the “off-line” tower is regenerating. Regeneration, sometimes referred to as purging, is the process by which moisture accumulated during the “on-line” cycle is stripped away during the “off-line” cycle. As dry low pressure purge air flows gently through the regenerating bed, it attracts the moisture that had accumulated on the surface of the desiccant during the drying cycle and exhausts it to the atmosphere.

To protect the desiccant bed from excess liquid, all Parker TW Series Heatless Air Dryers are designed to work with the natural pull of gravity. By directing the saturated air into the bottom of the “on-line” tower and flowing up through the bed, liquid condensate caused by system upset, is kept away from the desiccant and remains at the bottom of the tower where it can be easily exhausted during the regeneration cycle. Counter flow purging ensures optimum performance by keeping the driest desiccant at the discharge end of the dryer.

Heatless dryers in general are the most reliable and least expensive of all desiccant type dryers. Parker Airtek TW Series Heatless Desiccant Air Dryers are more energy efficient than competitors thanks to standard features such as: variable cycle control, CycleLoc® and regulated purge flow.

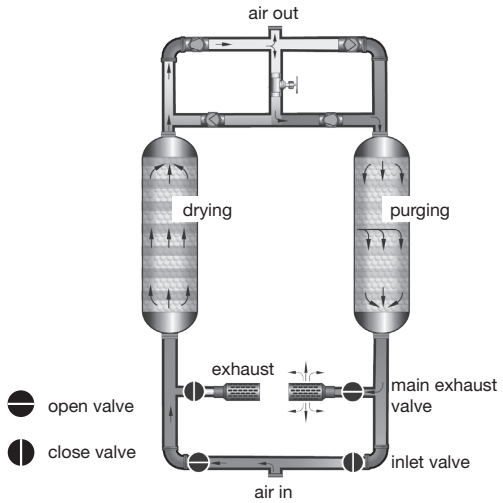

For inventory, lead times, and kit lookup, visit www.pdnplu.com

Parker Hannifin Corporation
Pneumatic Division
Richland, Michigan
www.parker.com/pneumatics

Tel: +45 63 12 83 00 | Email: ps@hymatik.com | www.hymatik.com | Hvidkaervej 27a, DK-5250 Odense SV, Denmark

Basic Controller



(Standard on Models TW41 - TW801)

- Allen-Bradley® PLC
- Nema 4X enclosure
- LCD user interface
- Four line digital display features:
  - Tower drying indication
  - Tower regenerating indication
  - Run status
  - Time remaining in cycle
- Selectable cycle settings
- Programmable drain timer (drain on, time and test)
- Compressor demand via external dry contact (CycleLoc®)
- Power ON/OFF switch
- Step-through regeneration for maintenance
- Cycle counter
- Hours of operation

Advanced Controller



(Optional on Models TW41-801)

- Allen-Bradley® PLC
- Powerloc® Energy Demand System
  - Energy savings percentage
  - Hours in power save
- Nema 4X enclosure
- 3.5" LCD user interface
- Dew point sensor input (-148°F to 68°F)
- Optional 4-20 mA output for remotely monitoring dew point
- Tower pressure sensors
- Inlet pressure and temperature sensors
- Compressor demand via external dry contact (CycleLoc®)
- Modbus/TCP communications via standard ethernet port
- Modbus RTU communications via optional RS232/485 port (Using external gateway device)
- SD card slot for accessing historical data and alarm information
- Selectable cycle settings
- Programmable drain timer (drain on, time and test)
- User selectable alarms with common alarm relay
  - High inlet temperature
  - Low inlet pressure
  - Tower failed to blow down (switch failure)
  - Tower failed to pressurize
  - High dew point
  - Sensor failure for all sensors
  - Switch failure
  - Inlet filter pressure
- Filter maintenance timer & alarm
- Clogged muffler maintenance and alarm
- Power ON/OFF switch
- Alarm log stores most recent alarms
- Flashes green when in energy savings mode
- Flashes red when an alarm is present
- Dry contact for common alarm

PowerLoc® Energy Management System



(Optional on Models TW41-801)**

Energy savings of up to 80% can be achieved with the proven PowerLoc® energy management system.

Regeneration requirements are dependent on flow, pressure and temperature. The PowerLoc® system allows the cost of drying compressed air to be matched exactly to your plant conditions.

PowerLoc® controls the drying cycle by continuously reacting to the loading under which the dryer is operating and minimizes the energy input required.

As dryers rarely operate at full rated capacity all of the time (eg. during shift work and periods of low demand), this energy management system can provide considerable savings.

The Advanced Controller is designed to accomodate Parker Airtek's PowerLoc Energy Management System. Flashes green when in energy saving mode.

High Performance Components



Poppet Valve

TW41 - TW801

- Stainless steel body
- Stainless steel internals
- PTFE seal
- Air activated, spring return
- Visual position indicator on exhaust valves
- ANSI Class VI shutoff
- Long service life
- Repair kits available
- 5 year valve warranty

Filter Package Schematic

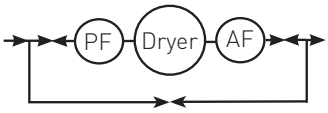

Package "B"

(Standard TW41 - TW801)

Includes dryer with factory installed pre-filter and after-filter with system bypass

For inventory, lead times, and kit lookup, visit www.pdnplu.com

Parker Hannifin Corporation
Pneumatic Division
Richland, Michigan
www.parker.com/pneumatics

Tel: +45 63 12 83 00 | Email: ps@hymatik.com | www.hymatik.com | Hvidkaervej 27a, DK-5250 Odense SV, Denmark

Flow correction factors

Capacities are based upon:

- Maximum inlet air or ambient air temperature 120°F (49°C)
- Maximum working pressure: 150 psig (10.5 bar g) standard units for high maximum working pressure are available
- Minimum operating pressure: 80 psig (5.5 bar g)

Correction Factors

To obtain drying capacity at new conditions: (nominal capacity) x C1 x C2

Temperature Correction Factor

Maximum inlet temperature (C1)	°F	90	95	100	105	110	115	120
	°C	32	35	38	41	43	46	49
	CF	1.17	1.15	1.00	0.87	0.76	0.66	0.58

Pressure Correction Factor

Minimum inlet pressure (C2)	psi g	80	90	100	110	120	130
	bar g	5.5	6.2	6.9	7.6	8.3	9.0
	CF	0.83	0.91	1.00	1.09	1.17	1.26

Flows are at 100 psig inlet pressure, 100°F inlet temperature, and 100°F ambient temperature.
Weight includes desiccant dryer with basic controller FLA 2 amps, advanced controller FLA 3 amps.

Heatless Desiccant Air Dryers

TW Series

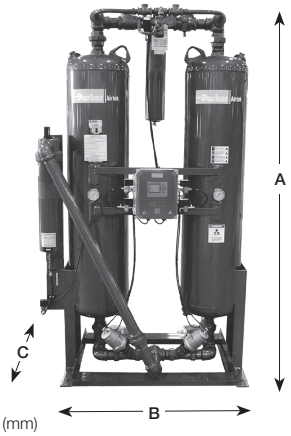

Inch (mm)

Part Number	A (length)	B (width)	C (depth)	Weight lbs. (kg)
TW41BN14NNN	49 (1245)	21 (533)	25 (635)	190 (86)
TW56BN14NNN	65 (1651)	22 (559)	31 (787)	230 (104)
TW76BN14NNN	80 (2032)	34 (864)	29 (737)	384 (174)
TW101BN14NNN	79 (2007)	36 (914)	30 (762)	468 (212)
TW131BN14NNN	79 (2007)	36 (914)	30 (762)	496 (225)
TW201BN14NNN	81 (2057)	42 (1067)	34 (864)	692 (314)
TW251BN14NNN	81 (2057)	45 (1143)	36 (914)	776 (352)
TW301BN14NNN	81 (2057)	45 (1143)	36 (914)	796 (361)
TW401BN14NNN	83 (2108)	48 (1219)	41 (1041)	1626 (738)
TW501BN14NNN	83 (2108)	51 (1295)	43 (1092)	1735 (787)
TW601BN14NNN	84 (2134)	50 (1270)	44 (1118)	1740 (789)
TW801BN14NNN	88 (2235)	56 (1422)	45 (1143)	2120 (962)

Repair and Service Kits

Dryer Model	Pre-Filter	Pre-Filter Element	After-Filter	After-Filter Element
TW41	**AAP015CFNI**	**P015AA**	**AOP015CNFI**	**P015AO**
TW56	**AAP020DFNI**	**P020AA**	**AOP020DNFI**	**P020AO**
TW76	**AAP025DNFI**	**P025AA**	**AOP025DNMI**	**P025AO**
TW101	**AAP025ENFI**	**P025AA**	**AOP025ENMI**	**P025AO**
TW131	**AAP025ENFI**	**P025AA**	**AOP025ENMI**	**P025AO**
TW201	**AAP030GNFI**	**P030AA**	**AOP030GNMI**	**P030AO**
TW251	**AAP035GNFI**	**P035AA**	**AOP035GNMI**	**P035AO**
TW301	**AAP035GNFI**	**P035AA**	**AOP035GNMI**	**P035AO**
TW401	**AAP040HNFI**	**P040AA**	**AOP040HNMI**	**P040AO**
TW501	**AAP045INFI**	**P045AA**	**AOP045INMI**	**P045AO**
TW601	**AAP045INFI**	**P045AA**	**AOP045INMI**	**P045AO**
TW801	**AAP050INFI**	**P050AA**	**AOP050INMI**	**P050AO**

Parker Hannifin Corporation
Pneumatic Division
Richland, Michigan
www.parker.com/pneumatics

Tel: +45 63 12 83 00 | Email: ps@hymatik.com | www.hymatik.com | Hvidkaervej 27a, DK-5250 Odense SV, Denmark



Air Preparation Products
Airline Accessories

Drains	N2-N4
Lockout Valves	N5-N11
AirGuard Protection System	N12-N13
Mufflers	N14-N19

Tel: +45 63 12 83 00 | Email: ps@hymatik.com | www.hymatik.com | Hvidkaervej 27a, DK-5250 Odense SV, Denmark

Automatic Electrical Drain Valve – WDV3-G

The WDV3 Electrical Drain is designed to remove condensate from compressors, compressed air dryers and receivers up to any size, type or manufacturer.



Benefits

- Does not air-lock during operation
- Compressed air systems up to any size
- The direct acting valve is serviceable
- Suitable for all types of compressors
- Test (micro-switch) feature
- High time cycle accuracy
- Large (4.5mm) valve orifice

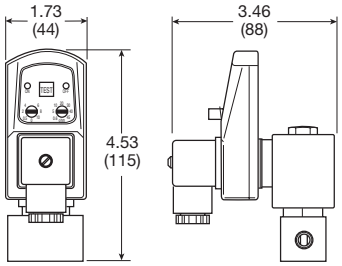

Operating information

Operating pressure:	230 psig (16 bar)
Ambient operating temperature:	34°F to 130°F (1.1°C to 54°C)
Voltages:	115VAC, 230/50-60Hz, 24VDC
Coil insulation:	Class H, 340°F (171.1°C)
Current rating:	4mA maximum
Timer –	
Open time	.5 to 10 sec., adjustable
Cycle time	.5 to 45 min., adjustable

Material specifications

Valve body	Brass / stainless steel
Enclosure (IP65 / NEMA 4)	ABS plastic
Internal parts	Brass / stainless steel
Valve seals	FPM (Fluorocarbon)

Automatic Electrical Drain Valve

Port Size	Primary Voltage	Weight (kg)	Model Number
1/4	120VAC	1.8 (0.8 kg)	**WDV3-G12BL**
1/4	230VAC	1.8 (0.8 kg)	**WDV3-G22BL**
3/8	120VAC	1.8 (0.8 kg)	**WDV3-G13BL**
3/8	230VAC	1.8 (0.8 kg)	**WDV3-G23BL**
1/2	120VAC	1.8 (0.8 kg)	**WDV3-G14BL**
1/2	230VAC	1.8 (0.8 kg)	**WDV3-G24BL**
1/2	24VDC	1.8 (0.8 kg)	**WDV3-G34BL**

Tel: +45 63 12 83 00 | Email: ps@hymatik.com | www.hymatik.com | Hvidkaervej 27a, DK-5250 Odense SV, Denmark

ED Zero Air Loss Condensate Drains

Zero air loss condensate drains are designed for economical removal of unwanted water, oil emulsions, and other liquids. These drains will only open when liquid is present and will not allow any compressed air to escape from the system.



Operating information

Maximum pressure:	232 psig (16 bar)
Ambient operating temperature:	35°F to 140°F (1.6°C to 60°C)
Voltages optional – NPT BSPP ports	115/50-60Hz, standard 230/50-60Hz & 24VDC

Zero Air Loss Condensate Drains

Port Size (NPT)	Compressor Aftercooler (scfm)*	Capacity Refrigeration Dryer (scfm)**	Filter (scfm)	Drain Capacity per Day (gal/liter)	Model Number	Service Kit
1 @ 3/8 (in), 1 @ 3/8 (out)	—	—	424	6 (22.7)	**ED3002N115-K**	**SKED3000N115**
1 @ 1/2 (in), 1 @ 3/8 (out)	141	282	1,413	13 (49.2)	**ED3004N115-K**	**SKED3000N115**
2 @ 1/2 (in), 1 @ 3/8 (out)	247	494	2,472	23 (87.1)	**ED3007N115-K**	**SKED3000N115**
2 @ 1/2 (in), 1 @ 3/8 (out)	1,059	2,119	10,594	100 (378.5)	**ED3030N115-K**	**SKED3000N115**
2 @ 1/2 (in), 1 @ 3/8 (out)	3,532	7,063	35,315	330 (1,249.2)	**ED3100N115-K**	**SKED3000N115**

* Based on 100 PSI working pressure, air compressor inlet at 77°F (25°C) at 60% RH, air discharge temperature of 95°F (35°C) following the aftercooler, pressure dewpoint of 37°F (2.8°C) after the refrigerated dryer.

** Condensate from aftercooler or refrigerated dryer to be drained upstream – only for residual oil content or small quantities of condensate.

Note: A 6 ft. line cord will be included with each drain.

Where Are Condensate Drains Used?

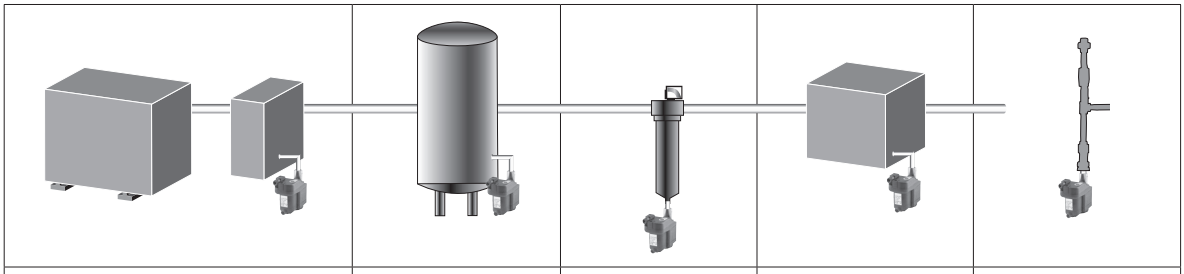

Compressor with Aftercooler	Receiver Tank	Filter	Air Dryer	Drip Leg
Removes the condensate that is collected after the air cools in the aftercooler	Removes the condensate that is collected when the air cools inside of the receiver tank	Removes the condensate that is collected in the filter bowl	Removes the condensate that is collected in the air dryer	Point-of-use applications: removes the condensate from compressed air pipes in a plant

Dimensions

ED3002N115-K

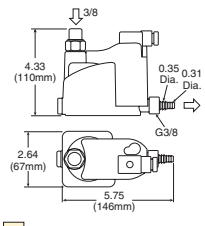

ED3004N115-K

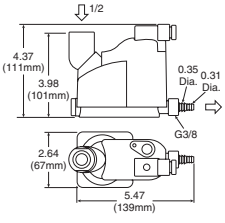

ED3007N115-K

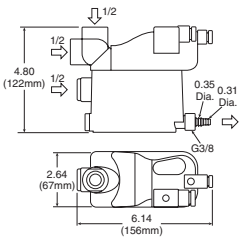

ED3030N115-K

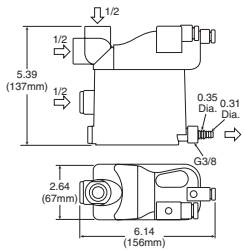

ED3100N115-K

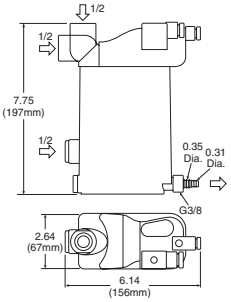

Most popular.

For inventory, lead times, and kit lookup, visit www.pdnplu.com

Parker Hannifin Corporation
Pneumatic Division
Richland, Michigan
www.parker.com/pneumatics

Tel: +45 63 12 83 00 | Email: ps@hymatik.com | www.hymatik.com | Hvidkaervej 27a, DK-5250 Odense SV, Denmark

Drain cocks are manufactured in external seats. Hand tightening provides a metal - to - metal seal.

Drain Cock Nomenclature

Example:

DC 604 - 2

- Drain Cock
- External Seat
- 1/8" Pipe Thread



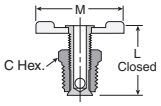

External Seal - Drain Cock DC604

Temperature Range: -25° to 250°F

Part Number	Pipe Thread	C Hex	L	M
DC604-2*	1/8	7/16	.85	1.25
DC604-4	1/4	9/16	1.00	1.38
DC604-6*	3/8	11/16	1.22	1.68

*When assembled handle wings are down facing



Operating information

Operating pressure:	150 psig (150 bar)
Temperature ranges:	
Internal seal	-65°F to 250°F (-53.9°C to 12.1°C)
External seal	-25°F to 250°F (-31.7°C to 12.1°C)
Operating fluid:	Air, water, gas and certain other fluids

Note: Lubricant may not be compatible with some fluids, contact factory for special fluid requirements.

Tel: +45 63 12 83 00 | Email: ps@hymatik.com | www.hymatik.com | Hvidkaervej 27a, DK-5250 Odense SV, Denmark

LV / LVSS Series

Lockout valves are installed in pneumatic drop legs, or individual pneumatic control lines. In accordance with OSHA procedures, lockout valves are used during maintenance and service procedures of pneumatically (air) operated equipment.

- Used for compliance with OSHA 29 CFR part 1910
- 1/4" to 2" pipe sizes. NPT or BSPP
- Yellow cast aluminum body with red handle or stainless steel (NACE MR0175 / ISO 15156)
- Inline or surface mountable
- Built in port for pressure verification to meet ANSI B11 and PMMI B155 requirements
- Fluorocarbon slipper seals for easy shifting, even after long periods of inactivity



Material specifications

Description	LV	LVSS
Body:	Cast aluminum alloy	Stainless steel
Handle:	Plastic	Stainless steel
Spool:	Aluminum	Stainless steel
Seals:	Carboxylated nitrile	Fluorocarbon
Detent spring:	Stainless steel	Stainless steel
Grease:	Magnalube G †	Magnalube G †

† Trademark Magnalube

Operating information

Operating pressure:	LV	LVSS
Compact	15 to 145 PSIG	–
Standard	15 to 300 PSIG	15 to 300 PSIG
High flow	15 to 300 PSIG	–
Operating temperature:	40°F to 175°F	30°F to 175°F

Operating media: Clean, dry, compressed air (5 micron)

Compact

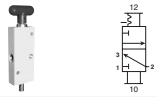

Port in/out	Port Exhaust	SCFM in/out	SCFM Exhaust	Wt (lb)	Part Number *
1/4	3/8	41.8	40.7	0.9	**LV2N3B**
3/8	3/8	60.7	60.7	0.9	**LV3N3B**

Standard

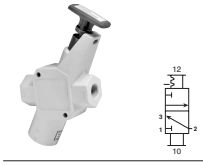

Port in/out	Port Exhaust	SCFM in/out	SCFM Exhaust	Wt (lb)	Part Number *
3/8	3/4	107.7	81.1	2.0	**LV3N6B**
1/2	3/4	161.4	90.9	2.0	**LV4N6B**
3/4	3/4	187.7	93.2	2.0	**LV6N6B**
3/4	1-1/4	297.7	204	3.2	**LV6NAB**
1	1-1/4	375	216	3.2	**LV8NAB**
1-1/4	1-1/4	436.4	221	3.2	**LVANAB**

High Flow

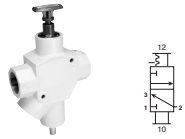

Port in/out	Port Exhaust	SCFM in/out	SCFM Exhaust	Wt (lb)	Part Number *
1-1/2	2	761.4	1156	8.2	**LVBNCB**
2	2	918.2	1186	8.2	**LVCNCB**

Stainless Steel

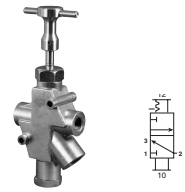

Port in/out	Port Exhaust	SCFM in/out	SCFM Exhaust	Wt (lb)	Part Number *
1/4	1/4	48.6	47.2	3.8	**LV2N2BSS**
3/8	1/2	131.6	142	6.0	**LV3N4BSS**
1/2	1/2	131.6	142	6.0	**LV4N4BSS**
3/4	1	325	386	13	**LV6N8BSS**
1	1	325	386	13	**LV8N8BSS**
1-1/2	2	889	1023	35	**LVBNCBSS**
2	2	889	1023	35	**LVCNCBSS**

NOTE: Exhaust flow rates calculated using inlet pressure 100 psig (6.7 bar), pressure drop 5 psi (0.34 bar), air temp 68°F (20°C), and 36% relative humidity.

* For BSPP ports, change 4th digit from "N" to "B"

☐ Most popular.

For inventory, lead times, and kit lookup, visit www.pdnplu.com

Parker Hannifin Corporation
Pneumatic Division
Richland, Michigan
www.parker.com/pneumatics

EZ Series

The EZ series meets all the same standards as the LV series with the added feature of a soft start when opened. There are still 2 detented positions for the handle (push close, pull to open), but when pulled open, an adjustable needle valve controls the rate of pressure build-up. This can protect equipment during start up after maintenance. The EZ is distinguishable from the LV series by the blue dot on the label.

Features

- Combines lockout and soft-start functions in a single unit
- Used in systems for compliance with OSHA standard 29 CFR part 1910
- 3/8 Inch to 1-1/4 inch pipe sizes
- Cv's from 3.7 to 13.7
- 3/4 and 1-1/4 inch: exhaust ports available
- Exhaust port threaded for installation of silencer or line for remote exhausting
- Inline or surface mountable
- Yellow cast aluminum body with red handle. Blue dot on body indicates EZ Series valve
- Fluorocarbon slipper seals for easy shifting, even after long periods of inactivity



3/4" Exhaust Shown

Operating information

Operating pressure:
Standard 15 to 300 PSIG
Operating temperature: 40°F to 175°F
Operating media: Clean, dry, compressed air (5 micron)

Material specifications

Description	
Body:	Cast aluminum alloy
Handle:	Plastic
Spool:	Aluminum
Seals:	Carboxylated nitrile
Detent spring:	Stainless steel
Grease:	Magnalube G †

† **Trademark Magnalube**

EZ Series



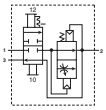

Port in/out	Port Exhaust	SCFM in/out	SCFM Exhaust	Wt (lb)	Part Number *
3/8	3/4	136.4	181	2.1	**EZ03NB6**
1/2	3/4	161.4	189	2.1	**EZ04NB6**
3/4	3/4	181.9	216	2.1	**EZ06NB6**
3/4	1-1/4	272.7	248	3.2	**EZ06NBA**
1	1-1/4	311.4	273	3.2	**EZ08NBA**
1-1/4	1-1/4	368.2	291	3.2	**EZ0ANBA**

NOTE: Exhaust flow rates calculated using inlet pressure 100 psig (6.7 bar), pressure drop 5 psi (0.34 bar), air temp 68°F (20°C), and 36% relative humidity.
* For BSPP ports, change 5th digit from "N" to "B"

☐ Most popular.

Tel: +45 63 12 83 00 | Email: ps@hymatik.com | www.hymatik.com | Hvidkaervej 27a, DK-5250 Odense SV, Denmark

Applications

Lockout valves are installed in pneumatic drop legs, or individual pneumatic control lines (see Figure 1). In accordance with OSHA procedures, EZ valves are used during maintenance and service procedures of pneumatically (air) operated equipment. Prior to servicing, the red handle is pressed inward, blocking pressure and relieving all downstream air pressure. A padlock is installed through the locking hasp, preventing accidental actuation during the maintenance procedure. Following maintenance, the padlock is removed and the red handle is pulled outward, gradually returning air pressure to the system. (For complete Lockout / Tagout procedures, consult OSHA Standard 29 CFR Part 1910 in U.S. Federal Register/Vol. 54 No. 169, Friday, September 1, 1989 / Page 36644.)

Mounting

Valves can be inline mounted or surface mounted using the two mounting holes provided in the valve body. Mount valves in plain view with the handle oriented for accessibility.

Placement of Lockout Device

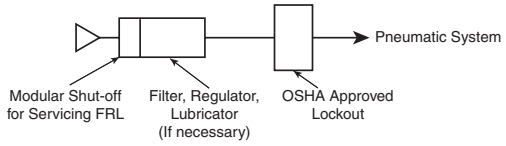

Figure 1.

LV / LVSS Operation

Normal Machine Operation – Valve Open

With the handle pulled outward. Inlet Port 1 is open to outlet Port 2. Exhaust Port 3 is blocked.

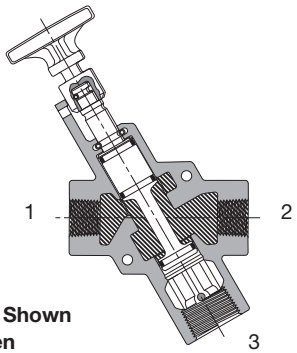

LV Series Shown Open

Lockout Operation – Valve Closed

With the handle pushed inward. Inlet Port 1 is blocked. Outlet Port 2 is open to Exhaust Port 3.

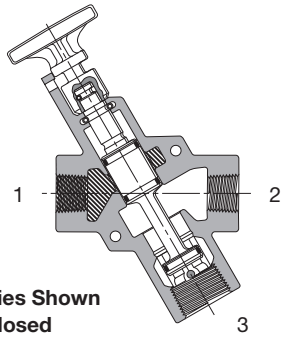

LV Series Shown Closed

EZ Operation

Normal Machine Operation – Valve Open

When the red handle is pulled outward, the adjustable needle valve (accessed through the top of the handle) setting determines the rate of pressure buildup. When downstream pressure reaches the full flow described in the specifications below, Inlet Port 1 is open to outlet Port 2. Exhaust Port 3 is blocked.

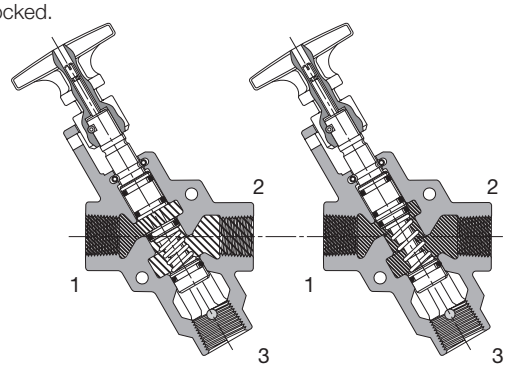

Open Pressure Building Up **Open Full Flow**

Lockout Operation – Valve Closed

When the red handle is pushed inward, the Inlet Port 1 is blocked. Downstream air is exhausted through Exhaust Port 3.

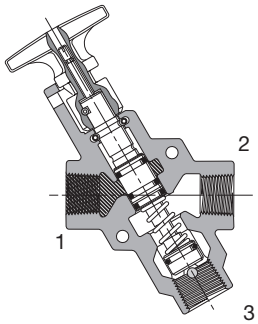

Closed

For inventory, lead times, and kit lookup, visit www.pdnplu.com

Parker Hannifin Corporation
Pneumatic Division
Richland, Michigan
www.parker.com/pneumatics

Tel: +45 63 12 83 00 | Email: ps@hymatik.com | www.hymatik.com | Hvidkaervej 27a, DK-5250 Odense SV, Denmark

Corrosion resistant mufflers for harsh environments



Port Size	Construction	Threads	Dimensions In. (Mm) Width	Length	Part Number
1/4	Stainless steel	Male. NPT	0.56 (14.2)	1.75 (44.5)	**5500A2004**
1/2	Stainless steel	Male, NPT	0.87 (22.1)	2.75 (69.7)	**5500A4004**
1	Stainless steel	Male, NPT	1.31 (33.3)	3.87 (98.3)	**5500B6004**
2	Nickel plated	Male, NPT	2.37 (60.2)	5.50 (139.7)	**5500A9004***

* Nickel plated

High Flow Silencers



Part Number *	ES25MC	ES37MC	ES50MC	ES75MC	ES100MC	ES125MC	ES150MC	ES200MC
Pipe size	1/4	3/8	1/2	3/4	1	1-1/4	1-1/2	2
Flow (scfm)	129	219	549	893	1013	1486	1580	1580
Hex In. (mm)	0.63 (16)	1.00 (25)	1.00 (25)	1.62 (41)	1.62 (41)	—	—	2.99 (76)
Length In. (mm)	1.85 (47)	3.31 (84)	3.31 (84)	4.56 (116)	4.56 (116)	5.69 (145)	5.69 (145)	7.68 (195)

* NPT ports standard, for BSPT ports, add a "B" after the "S"

Pop-up Pressure Indicator



Brass – Part # **988A30** – Can be used on all LV or EZ series to provide visual verification of line exhaust



Stainless – Part# **1155H30** – Can be used on SS LV series to provide visual verification of line exhaust

Pressure Switch



- Part # **PPS1-2C3-RHM** (DIN 9.4mm connector)
- Part # **PPS1-2C3-RWL** (18" leads)
- Signal verification of line exhaust
- Field adjustable set point

Tel: +45 63 12 83 00 | Email: ps@hymatik.com | www.hymatik.com | Hvidkaervej 27a, DK-5250 Odense SV, Denmark

LZ Series, Exhaust Port - Compact, Standard, High Flow

Compact

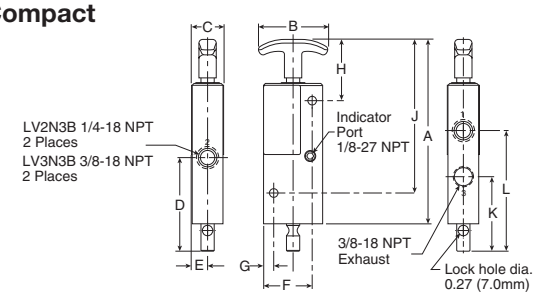

Compact LV Series, 3/8" Exhaust Port Dimensions

A	B	C	D	E	F
6.50 (165)	2.25 (57)	1.05 (27)	3.04 (77)	.51 (13)	1.58 (40)

G	H	J	K	L
.33 (8)	1.99 (51)	4.99 (127)	2.42 (62)	3.92 (100)

Inches (mm)

Standard

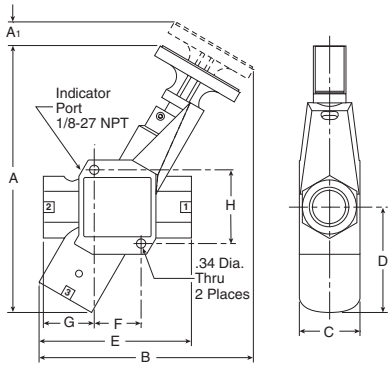

Compact LV Series, 3/4" Exhaust Port Dimensions

A	A1	B	C	D	E
8.32 (211)	0.64 (16)	6.60 (168)	2.00 (51)	3.06 (78)	4.24 (108)

F	G	H
1.32 (111)	1.56 (40)	2.21 (56)

Inches (mm)

Compact LV Series, 1-1/4" Exhaust Port Dimensions

A	A1	B	C	D	E
9.91 (252)	0.85 (22)	7.95 (202)	2.25 (57)	3.91 (99)	5.65 (144)

F	G	H
1.74 (44)	1.89 (48)	2.74 (70)

Inches (mm)

High Flow

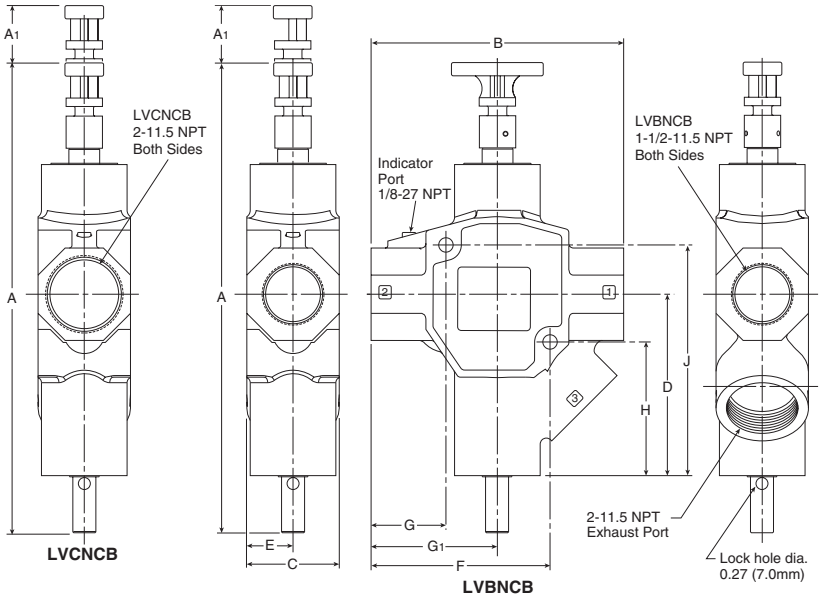

High Flow LV Series, 2" Exhaust Port Dimensions

A	A1	B
14.82 (376)	1.87 (47)	8.20 (208)

C	D	E	F	G	G1
3.00 (76)	5.89 (150)	1.50 (38)	5.81 (148)	2.43 (62)	4.10 (104)

H	J
4.34 (110)	7.49 (190)

Inches (mm)

Tel: +45 63 12 83 00 | Email: ps@hymatik.com | www.hymatik.com | Hvidkaervej 27a, DK-5250 Odense SV, Denmark

LZ Series, Exhaust Port - Compact, Standard, High Flow

Stainless Steel

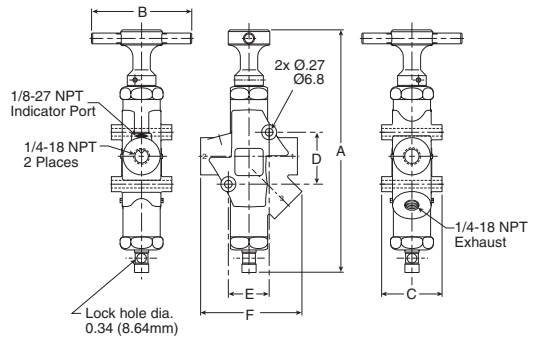

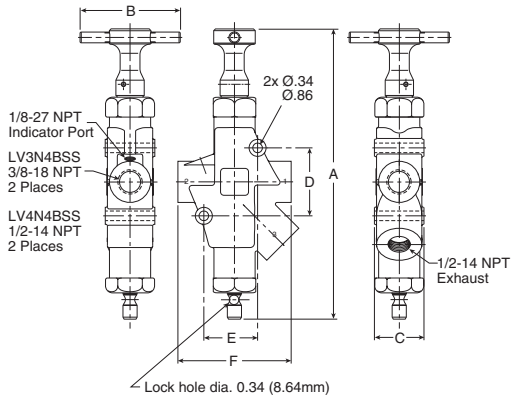

Stainless Steel LV Series, 1/4" Exhaust Port Dimensions

A	B	C	D	E	F
8.47 (215)	3.50 (89)	2.11 (54)	1.81 (46)	1.43 (36)	3.54 (90)

Inches (mm)

Stainless Steel LV Series, 1/2" Exhaust Port Dimensions

A	B	C	D	E	F
10.24 (260)	3.50 (89)	1.75 (45)	2.40 (61)	190 (48)	4.00 (102)

Inches (mm)

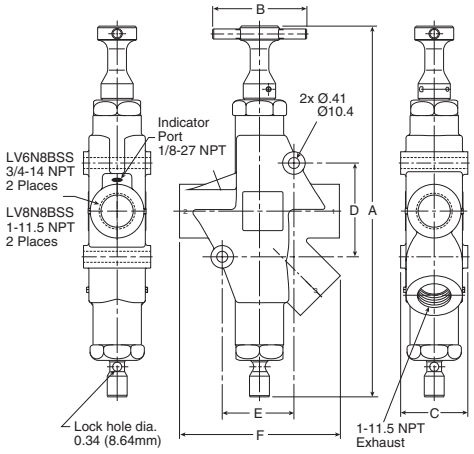

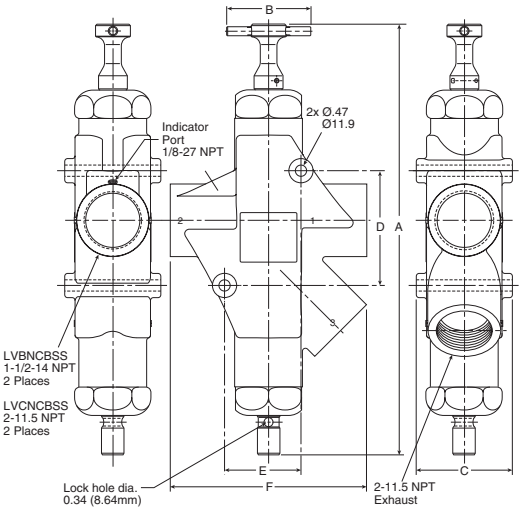

Stainless Steel LV Series, 1" Exhaust Port Dimensions

A	B	C	D	E	F
13.80 (351)	3.50 (89)	2.50 (64)	3.49 (89)	2.67 (68)	5.99 (152)

Inches (mm)

Stainless Steel LV Series, 2" Exhaust Port Dimensions

A	B	C	D	E	F
17.92 (455)	3.50 (89)	4.00 (102)	4.77 (121)	3.18 (81)	8.16 (207)

Inches (mm)

For inventory, lead times, and kit lookup, visit www.pdnplu.com

Parker Hannifin Corporation
Pneumatic Division
Richland, Michigan
www.parker.com/pneumatics

Tel: +45 63 12 83 00 | Email: ps@hymatik.com | www.hymatik.com | Hvidkaervej 27a, DK-5250 Odense SV, Denmark

EZ Series, Exhaust Port - Standard Flow

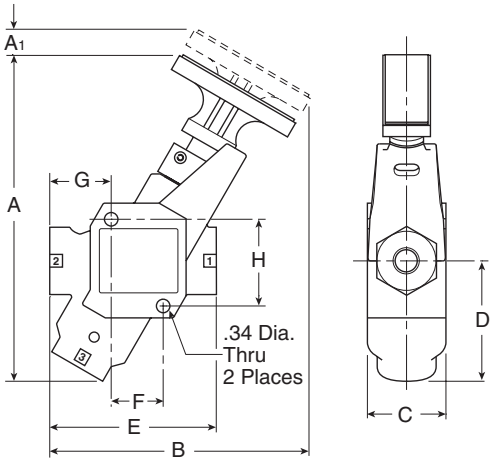

EZ 3/4" Exhaust Port Dimensions

A	A1	B	C	D
8.32 (211)	0.64 (16)	6.60 (168)	2.00 (51)	3.06 (78)

E	F	G	H
4.24 (108)	1.32 (111)	1.56 (40)	2.21 (56)

Inches (mm)

EZ 1-1/4" Exhaust Port Dimensions

A	A1	B	C	D
9.91 (252)	0.85 (22)	7.95 (202)	2.25 (57)	3.91 (99)

E	F	G	H
5.65 (144)	1.74 (44)	1.89 (48)	2.74 (70)

Inches (mm)

Parker Hannifin Corporation
Pneumatic Division
Richland, Michigan
www.parker.com/pneumatics

Tel: +45 63 12 83 00 | Email: ps@hymatik.com | www.hymatik.com | Hvidkaervej 27a, DK-5250 Odense SV, Denmark

AirGuard Protection System





Product Features:

- **Maintenance Friendly**
  Repair possible while plant is still operating
- **Economic**
  Competitive pricing
- **Complies with EU Standard**
  EN 983 - § 5.3.4.3.2
- **Reliable and Tamperproof**
  No adjustment necessary
- **Complies with ISO Standard**
  4414 - § 5.4.5.11.1
- **Complies with MSHA Regulation**
  30CFR 56.13021, 57.13021 and 57.1730
- **Lightweight**
  Compact size
- Compatible with all Pneumatic Systems
- Can be used as a Flow Blocker
- **TUV Approval**
  No. 01-02-0145
- **EU Registered Utility**
  Model No. 0025 73 525
- **Complies with OSHA Regulation Standard**
  29CFR 1926.302 (Partial)

Protect your most important assets: your employees and their equipment!

The AirGuard offers simple but efficient protection of a broken compressed-air hose. The air supply is immediately shut off by the AirGuard, should the volume of air exceed a set value. This “value” is factory preset and is set to allow normal air consumption when using air tools.

Should the air consumption exceeds the set value, e.g. the air line is severed, then the internal piston instantly shuts off the main flow. An integral bleed hole allows some air to flow though. This enables the line pressure to automatically reset the AirGuard once the main line break is repaired.

Function:

(P) is the inlet. Air passes the piston (1) and continues through the seat (3). The air flow, passing the piston, is slowed down by means of length wise grooves on the outer side of the piston. If the flow is too high, the air cannot pass the piston quickly enough, and the piston is forced against the spring (2) and towards the seat. The maximum flow is shown in the graph. If the value indicated is exceeded e.g. if the hose suddenly breaks - the air supply is automatically shut of. An integral bleed hole allows some air to flow though. This enables the line pressure to automatically reset the AirGuard once the main line break is repaired.

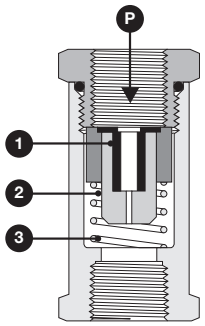

For inventory, lead times, and kit lookup, visit www.pdnplu.com

Parker Hannifin Corporation
Pneumatic Division
Richland, Michigan
www.parker.com/pneumatics

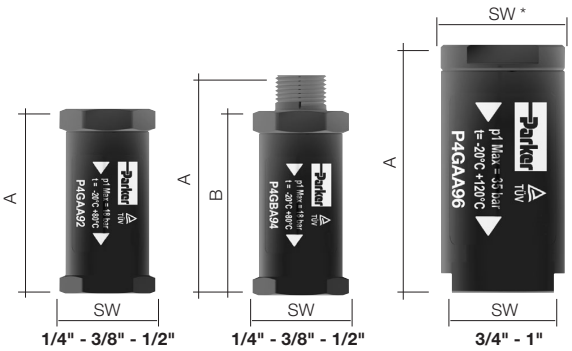

Weight and Dimensions metric (imperial)

Thread Connection	Dimensions inch (mm) A	B	SW	Weight oz. (g)	Max. Inlet Pressure	Temp. Range	Material	P1 Inlet Thread	P2 Outlet Thread	Part Number NPT
1/4"	1.89 (48)	-	.87 (22)	1.06 (30)	255 psig (18 bar)	-4°F to 176°F (-20°C to 80°C)	Housing: Aluminum Piston: Polyacetal	Female	Female	**P4GAA92**
1/4"	2.28 (58)	49 (1.93)	.87 (22)	1.27 (36)				Male	Female	**P4GBA92**
3/8"	2.32 (59)	-	1.10 (28)	2.05 (58)				Female	Female	**P4GAA93**
3/8"	2.80 (71)	59 (2.32)	1.10 (28)	2.19 (62)				Male	Female	**P4GBA93**
1/2"	2.56 (65)	-	1.22 (31)	2.75 (78)				Female	Female	**P4GAA94**
1/2"	3.15 (80)	65 (2.56)	1.22 (31)	3.00 (85)				Male	Female	**P4GBA94**
3/4"	2.99 (76)	-	1.18/1.42* (30/36*)	3.77 (107)		-4°F to 248°F (-20°C to 120°C)	Housing: Aluminum Piston: Aluminum	Female	Female	**P4GAA96**
1"	3.94 (100)	-	1.61/1.97* (41/50*)	10.58 (300)	500 psig (35 bar)			Female	Female	**P4GAA98**

How to Select the Optimal Size of an AirGuard

Information based on an inlet pressure of 7 bar (100 psig)

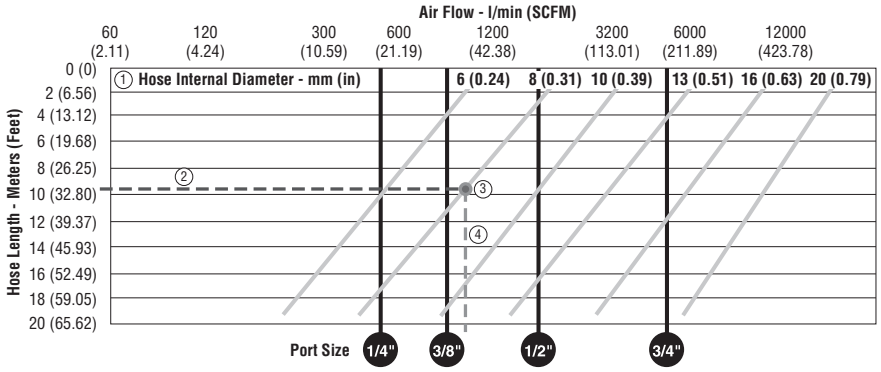

a. Determine the internal diameter of the hose, tube or pipe being used ① (see specification Hose-internal Diameter, diagonal line).
b. Determine the length of the hose, tube or pipe ② (Hose length in meters).
c. Define the intersection of point a and b, and mark a vertical line downwards. ③ - ④ In the example chart (dot ③) and the dashed line (④).
d. The next vertical black line, left of the intersection line (④) tells the correct AirGuard size (in inches).
e. Important: Every flow value to the right of the respective vertical line (black) would activate the AirGuard in case of a bursting hose, pipe or tube. All AirGuard sizes right of the intersection line (④) are too big and will not close up.
f. Example: Which air fuse should be used for a hose, pipe or tube bearing 8 mm inner diameter and 10 meters of length - follow the 10 meter line (②) to the intersection point (dot ③). Now the next left black line marks the correct size.
g. Result: The correct size in our example is the AirGuard 3/8"

Tel: +45 63 12 83 00 | Email: ps@hymatik.com | www.hymatik.com | Hvidkaervej 27a, DK-5250 Odense SV, Denmark

EM Series – Sintered Bronze Muffler / Filters

Muffler / filters effectively reduce air exhaust noises to an industry accepted level with minimum flow restriction. They protect valves, impact wrenches, screw drivers and other air tools by preventing dirt and other foreign matter from entering the system. Non-corrosive. Can be cleaned with many common solvents.





EM Series

Pipe Thread	Overall Length	Hex Size	Part Number
M5	.75	5/16"	**EMM5**
1/8"	1.00	7/16"	**EM12**
1/4"	1.32	9/16"	**EM25**
3/8"	1.54	11/16"	**EM37**
1/2"	1.85	7/8"	**EM50**
3/4"	2.29	1-1/6"	**EM75**
1"	2.91	1-5/16"	**EM100**
1-1/4"	3.25	1-11/16"	**EM125**
1-1/2"	3.69	2"	**EM150**

Operating information

Operating pressure: 250 psig (Air)
Cracking pressure 1 to 2 psig

Operating temperature:* 0°F to 300°F

* Ambient temperatures below freezing require moisture-free air. Ambient temperatures below freezing and above 180° require lubricants especially selected for suitability at these temperatures. Pneumatic valves should be used with filtered and lubricated air.

Muffler / Flow Controls

Muffler / flow controls provide an acceptable exhaust noise level and effectively meter exhaust. Installed in valve exhaust ports, they control cylinder piston speeds throughout a wide range. The adjusting screw cannot be accidently blown out, can be locked to maintain setting. Brass and bronze construction. Clean with commonly used solvents.



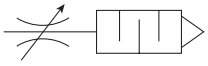

Muffler / Flow Controls

Pipe Thread	Overall Length	Hex Size	Part Number
1/8"	1.15	9/16"	**045020002**
1/4"	1.42	1/2"	**045040004**
3/8"	1.49	11/16"	**045060060**
1/2"	1.77	7/8"	**045080080**
3/4"	1.98	1-1/16"	**045120012**
1"	2.15	1-5/16"	**045160016**

Operating information

Operating pressure: 250 psig (Air)
Cracking pressure 1 to 2 psig

Operating temperature:* 0°F to 300°F

* Ambient temperatures below freezing require moisture-free air. Ambient temperatures below freezing and above 180° require lubricants especially selected for suitability at these temperatures. Pneumatic valves should be used with filtered and lubricated air.

☐ Most popular.

Tel: +45 63 12 83 00 | Email: ps@hymatik.com | www.hymatik.com | Hvidkaervej 27a, DK-5250 Odense SV, Denmark

Breather Vents

These low silhouette versions of the muffler / filter are useful where space is a problem and / or to prevent contamination. Use for vacuum relief or pressure equalization in gear boxes, oil tanks, reservoirs, etc. Non-corrosive.





NOTE: Breather vents should not be used as exhaust mufflers.

Breather Vent

Pipe Thread	Overall Length	Hex Size	Part Number
1/8"	0.44	7/16"	**047020002**
1/4"	0.63	9/16"	**047040004**
3/8"	0.75	11/16"	**047060006**
1/2"	0.88	7/8"	**047080008**
3/4"	1.00	1-1/6"	**047120012**
1"	1.31	1-5/16"	**047160016**
1-1/4"	1.41	1-11/16"	**047200020**
1-1/2"	1.50	2"	**047240024**

Operating information

Operating pressure: 150 psig (Air) max.

Operating temperature:* 0°F to 300°F

* Ambient temperatures below freezing require moisture-free air. Ambient temperatures below freezing and above 180° require lubricants especially selected for suitability at these temperatures. Pneumatic valves should be used with filtered and lubricated air.

ES Series – Silencer

The silencer is designed to give superior performance in noise control with a minimum effect on air efficiency. "Trimline" design allows location in the tightest places without extra plumbing and fittings. Fits directly into the exhaust port of more than 90% of present commercial valves. Slotted body permits rapid discharge of air without undesirable back pressure. Unique nylon screen element resists dirt buildup or clogging.





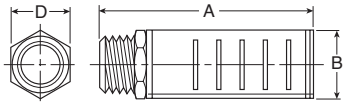

Operating information

Operating pressure: 250 psig (Air) max.

Operating temperature:* 0°F to 300°F

* Ambient temperatures below freezing require moisture-free air. Ambient temperatures below freezing and above 180° require lubricants especially selected for suitability at these temperatures. Pneumatic valves should be used with filtered and lubricated air.

ES Series – Silencer

Pipe Thread	Flow scfm @ 100 psig inlet	Dimensions A	B	D	Part Numbers NPTF	BSPT (R)
1/8"	115	1.85	0.81	0.63	**ES12MC**	**ESB12MC**
1/4"	129	1.85	0.81	0.63	**ES25MC**	**ESB25MC**
3/8"	219	3.31	1.26	1.00	**ES37MC**	**ESB37MC**
1/2"	549	3.31	1.26	1.00	**ES50MC**	**ESB50MC**
3/4"	893	4.56	2.01	1.62	**ES75MC**	**ESB75MC**
1"	1,013	4.56	2.01	1.62	**ES100MC**	**ESB100MC**
1-1/4"	1,486	5.69	2.88	—	**ES125MC**	**ESB125MC**
1-1/2"	1,580	5.69	2.88	—	**ES150MC**	**ESB150MC**

☐ Most popular.

For inventory, lead times, and kit lookup, visit www.pdnplu.com

Parker Hannifin Corporation
Pneumatic Division
Richland, Michigan
www.parker.com/pneumatics

Tel: +45 63 12 83 00 | Email: ps@hymatik.com | www.hymatik.com | Hvidkaervej 27a, DK-5250 Odense SV, Denmark

Stainless Steel Mufflers

Corrosion resistant mufflers for harsh environments

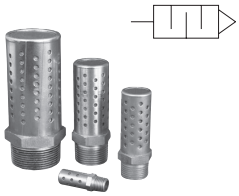

Port Size	Construction	Threads	Dimensions In. (mm) Width	Length	Part Number
1/4	Stainless steel	Male. NPT	0.56 (14.2)	1.75 (44.5)	**5500A2004**
1/2	Stainless steel	Male, NPT	0.87 (22.1)	2.75 (69.7)	**5500A4004**
1	Stainless steel	Male, NPT	1.31 (33.3)	3.87 (98.3)	**5500A6004**
2	Nickel plated	Male, NPT	2.37 (60.2)	5.50 (139.7)	**5500A9004***

* Nickel plated

Parker Hannifin Corporation
Pneumatic Division
Richland, Michigan
www.parker.com/pneumatics

Tel: +45 63 12 83 00 | Email: ps@hymatik.com | www.hymatik.com | Hvidkaervej 27a, DK-5250 Odense SV, Denmark

ASN Air Line Silencer, Plastic

- Compact
- Lightweight
- Easy to Install
- Excellent Noise Reduction
- Protects Components from Contamination
- NPT and BSPT Threads Available

The plastic silencer is designed to give excellent noise reduction with a minimum effect on air efficiency. The "Trimline" design allows for locating the silencer in the tightest places without extra plumbing or fittings. Fits directly into the exhaust port of most commercial valves. Open surface area of element allows for rapid discharge of air without undesirable back pressure.

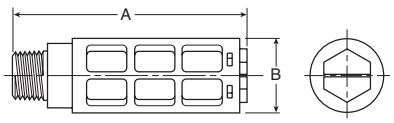



Operating information

Operating pressure:	0 to 150 psig (0 to 10 bar, 0 to 1034 kPa)
Operating temperature:	14°F to 140°F (-10°C to 60°C)

Material Specifications

Body	Acetal (Plastic)
Element	Polyethylene

ASN Air Line Silencer, Plastic

Thread Size	A (mm)	B (mm)	Maximum Flow (scfm) 100 psig inlet	Sound Pressure Level (dBA) 20 psig inlet	Sound Pressure Level (dBA) 100 psig inlet	Part Number NPT	Part Number BSPT
M5	0.43 (11)	0.32 (8)	15	69	79	**AS-5**	
1/8"	1.57 (40)	0.63 (16)	51	69	81	**ASN-6**	**AS-6**
1/4"	2.56 (65)	0.83 (21)	124	67	84	**ASN-8**	**AS-8**
3/8"	3.35 (85)	0.98 (25)	247	83	98	**ASN-10**	**AS-10**
1/2"	3.74 (95)	1.18 (30)	370	69	96	**ASN-15**	**AS-15**

☐ Most popular.

Tel: +45 63 12 83 00 | Email: ps@hymatik.com | www.hymatik.com | Hvidkaervej 27a, DK-5250 Odense SV, Denmark

P6M G Thread Air Line Silencer, Plastic

- All Plastic Ultra Light Weight Versions
- High Noise Level Reduction
- Low Back Pressure Generation

The plastic silencer is designed to give excellent noise reduction with a minimum effect on air efficiency. The "Trimline" design allows for locating the silencer in the tightest places without extra plumbing or fittings. Fits directly into the exhaust port of most commercial valves. Open surface area of element allows for rapid discharge of air without undesirable back pressure.

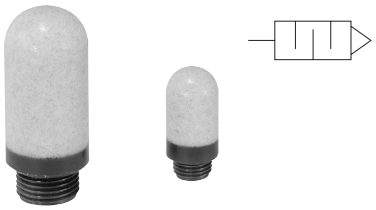

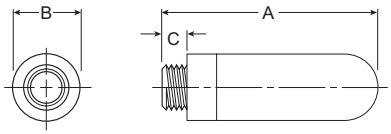

Operating information

Operating pressure:	0 to 246 psig (0 to 17 bar, 0 to 1700 kPa)
Operating temperature:	
Plastic	14°F to 176°F (-10°C to 80°C)
Metal	14°F to 165°F (-10°C to 74°C)
Efficiency	92%

P6M G Thread, Air Line Silencer, Plastic

Port Thread	A	Diameter B	C	Weight (grams)	Part Number
M5	0.91 (23)	0.26 (6,5)	0.16 (4)	0.01	**P6M-PAC5**
G1/8	1.14 (29)	0.55 (14)	0.24 (6)	0.02	**P6M-PAB1**
G1/4	1.34 (34)	0.67 (17)	0.24 (6)	0.04	**P6M-PAB2**
G3/8	2.36 (60)	0.98 (25)	0.35 (9)	0.06	**P6M-PAB3**
G1/2	2.52 (64)	0.98 (25)	0.43 (11)	0.10	**P6M-PAB4**
G3/4	5.51 (140)	1.50 (38)	0.55 (14)	0.50	**P6M-PAB6**
G1	6.30 (160)	1.89 (48)	0.79 (20)	0.62	**P6M-PAB8**

☐ Most popular.

Tel: +45 63 12 83 00 | Email: ps@hymatik.com | www.hymatik.com | Hvidkaervej 27a, DK-5250 Odense SV, Denmark

ECS Reclassifier, Air Line Muffler

The ECS (Muffler-Reclassifier) eliminates unwanted oil mist and reduces exhaust noise from pneumatic valves, cylinders and air motors.

- 99.97% Oil Removal Efficiencies
- 25 dBA Noise Attenuation
- 1/2" NPT and 1" NPT
- Disposable Units
- Continuous or Plugged Drain Option
- Metal Retained Construction
- Fast Exhaust Time

Improve Overall Plant Environment

Exhaust oil mist and noise pollution have a direct impact on worker productivity.

Oil aerosol mist from lubricators and compressors is pervasive and enters the industrial plant environment through the exhaust ports of valves, cylinders and air motors. This rapidly expanding exhaust also produces sudden and excessive noise.

The ECS (Muffler-Reclassifier) is 99.97% efficient at removing the oil aerosols. The ECS also acts as a silencer to lower the dBA levels below O.S.H.A. requirements.

The result is a cleaner, quieter environment which equates to greater work productivity and safety.

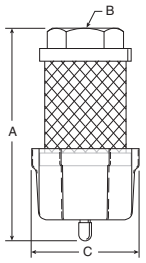

ECS Reclassifier, Air Line Muffler

Thread Size	A	B	C	Part Number
1/2	5.30 (135mm)	1/2" NPT	2.57 (65mm)	**ECS3**
1	7.30 (185mm)	1" NPT	2.57 (65mm)	**ECS5**

Performance Characteristics

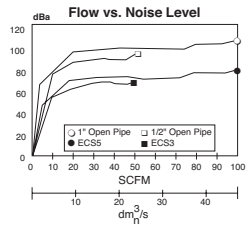

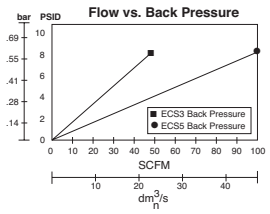

☐ Most popular.



Operating information

Maximum line pressure:	100 psig (6.8 bar)
Maximum operating temperature:	125°F (52°C)

Operation

Compressor oils and lubricating oils are exhausted from valves, cylinders and air motors into the ECS. Oil aerosols are "coalesced" into larger droplets and gravity pulls them into the attached drain sump. The sump can then be drained manually or by using a 1/4" ID plastic tube drain. The air flowing into the ECS is also muffled or silenced as it enters the inside of the ECS and passes through the filter media into the atmosphere.

Proven Technology

The ECS units are constructed from the same materials that go into our oil removal coalescing filter elements.

The seamless design insures media uniformity and strength. This proven technology provides high coalescing efficiency with low pressure drop.

The filter media is supported by cylindrical perforated steel retainers both inside and out. These retainers, fully plated for excellent corrosion resistance, give the ECS units high rupture strength in either flow direction. These filters can also be used as high efficiency inlet or bypass filters for vacuum pumps, or breather elements to protect the air above critical process liquids.

ECS3 / ECS5

The ECS solves two problems inherent in compressed air exhaust from valves, cylinders and air motors - oil mist removal and noise abatement.

The ECS will improve your industrial plant environment, thereby improving worker productivity.

For inventory, lead times, and kit lookup, visit www.pdnplu.com

Parker Hannifin Corporation
Pneumatic Division
Richland, Michigan
www.parker.com/pneumatics

Tel: +45 63 12 83 00 | Email: ps@hymatik.com | www.hymatik.com | Hvidkaervej 27a, DK-5250 Odense SV, Denmark

For inventory, lead times, and kit lookup, visit www.pdnplu.com

Parker Hannifin Corporation
Pneumatic Division
Richland, Michigan
www.parker.com/pneumatics

Tel: +45 63 12 83 00 | Email: ps@hymatik.com | www.hymatik.com | Hvidkaervej 27a, DK-5250 Odense SV, Denmark

Part Number Index, Safety Guide, Offer of Sale

Part Number Index O2-O13

Safety Guide O14-O15

Offer of Sale O16

Parker Hannifin Corporation
Pneumatic Division
Richland, Michigan
www.parker.com/pneumatics

Tel: +45 63 12 83 00 | Email: ps@hymatik.com | www.hymatik.com | Hvidkaervej 27a, DK-5250 Odense SV, Denmark

Model No.	Section / Page No.
02F1BA	J2
02FA06A	J8
02FA10A	J8
02FA22A	J8
02L1B	J38
02L2B	J38
02LFB	J38
04L00GB	D10, J42
04L03GB	D10, J42
04L10GB	D10, J42
04L13GB	D10, J42
05E12A13A	J36
05E12A13AB	E25
05E1PA13A	J36
05E22A13A	J36
05E22A13AB	E25
05E2PA13A	J36
05F12AA	E2
05F22AA	E2
05R113A	K20
05R113AD	E15
05R114AD	E15
05R118A	K20
05R213A	K20
05R213AD	E15
05R214AD	E15
05R218A	K20
060AA	H14
060AO	H14
06E12A13AC	E27
06E12A18AC	E27
06E12B18AC	E27
06E13A13AC	E27
06E13A13TC	E27
06E13A18AC	E27
06E14A13AC	E27
06E14A18AC	E27
06E16A13AC	E27
06E16A18AC	E27
06E17B13AC1	E28
06E22A13AC	E27
06E22A18AC	E27
06E22B13AC	E27
06E23A18AC	E28
06E24A13AC	E28
06E24A18AC	E28
06E26A13AC	E28
06E26A18AC	E28
06E28A13AC	E28
06E32A13AC	E28
06E32A18AC	E28
06E32B13AC	E28
06E32B18AC	E28
06E34A13AC	E28
06E34A18AC	E28
06E34B18AC	E28
06E36A13AC	E28
06E36A18AC	E28
06E36B13AC	E28
06E37A18AC	E28
06E38A13AC	E28
06E38A18AC	E28
06F12AC	E4
06F12BC	E4
06F13AC	E4
06F14AC	E4
06F16AC	E4
06F16BC	E4
06F17AC	E4
06F17BC	E4
06F18AC	E4
06F18BC	E4
06F22AC	E4
06F22AC1	E5
06F22BC	E4
06F24BC	E5
06F26AC	E5
06F26BC	E5
06F27BC	E5
06F28BC	E5
06F32AC	E5
06F32BC	E5
06F32BC1	E5
06F33AC	E5
06F34AC	E5
06F34BC	E5
06F34BC1	E5
06F36AC	E5
06F36BC	E5
06F38AC	E5
06F38BC	E5
06G22A13A2BC	E45
06G24A13A4BC	E45
06G32A18A2BC	E45
06L12BE	E41
06L14BE	E41
06L22BE	E41
06L24BE	E41
06L32BE	E41
06L32BE1	E41
06L34BE	E41
06R113AC	E17, K22
06R115AC	E17
06R118AC	E17, K22
06R213AC	E17
06R213AC	K22
06R215AC	E17
06R218AC	E17, K22
06R313AC	E17, K22
06R315AC	E17
06R318AC	E17, K22
07A32A13A2BD	E45
07A33A18A4BD	E45
07A42A13A2BD	E45
07A42A18A2BD	E45
07A46B18A2BD	E45
07B32A13A2BD	E47
07B32A18A2BDW	E47
07B33A21A3BD	E47
07B43A18A4BDW	E47
07E32A13AC	E30
07E32A18AC	E30
07E32B13AC	E30
07E32B18AC	E30
07E34A13AC	E30
07E34A15AC	E30
07E34A18AC	E30
07E34B13AC	E30
07E34B18AC	E30
07E36A13AC	E30
07E36A18AC	E30
07E36B13AC	E30
07E36B18AC	E30
07E37A13AC	E30
07E37B13AC	E31
07E38A13AC	E31
07E38A18AC	E31
07E38A21AC	E31
07E38B18AC	E31
07E42A13AC	E31
07E42A18AC	E31
07E42B13AC	E31
07E43A13AC	E31
07E44A13AC	E31

Tel: +45 63 12 83 00 | Email: ps@hymatik.com | www.hymatik.com | Hvidkaervej 27a, DK-5250 Odense SV, Denmark

Model No.	Section / Page No.
07E44A18AC	E31
07E44B15AC	E31
07E44B18AC	E31
07E44B21AC	E31
07E46A13AC	E31
07E46A18AC	E31
07E47A13AC	E31
07E48A13AC	E31
07F32AC	E7
07F32BC	E7
07F33AC	E7
07F34AC	E7
07F34BC	E7
07F36AC	E7
07F36BC	E7
07F37AC	E7
07F38AC	E7
07F38BC	E7
07F42AC	E7
07F42BC	E7
07F44AC	E7
07F44BC	E7
07F46AC	E7
07F46BC	E7
07F47AC	E7
07F48AC	E7
07L32BE	E43
07L32BE1	E43
07L34BE	E43
07L34FE	E43
07L3NBE	E43
07L42BE	E43
07L44BE	E43
07R313AC	E19, K26
07R313AC1	E19
07R315AC	E19
07R318AC	E19, K26
07R321AC	E19
07R413AC	E19, K26
07R415AC	E19
07R418AC	E19, K26
07R418AC1	E19
09L84BA	H32
09L8PBA	H32
09R813BA	H26, K40
1/4 FF-SS	F3, F7, F11, F15
10F01ED	D4, J12
10F03ED	D4, J12
10F05ED	D4, J12
10F07ED	D4, J12
10F11ED	D4, J12
10F13ED	D4, J12
10F15ED	D4, J12
10F17ED	D4, J12
1155H30	N8
118Y51	K39
11F12EC	E11
11F13ECN	E11
11F13HCN	E11
11F14EC	E11
11F16EC	E11
11F18EC	E11
11F22EC	E11
11F26EC	E11
11F27EC	E11
11F28EC	E11
11F32EC	E11
11F34EC	E11
11F36EC	E11
11F37EC	E11
11R115PC	E21, K50
11R121PC	K50
11R215PC	E21, K50
11R221PC	K50
11R315PC	E21, K50
11R321PC	K50
1227A30-001	B71
1232H30-001	B71
12E33E13AA	E33
12E33E18AA	E33
12E37E13AA	E33
12E37E18AA	E33
12E43E18AA	E33
12F32EC	E13
12F32ECN	E13
12F32HC	E13
12F32HCN	E13
12F34EC	E13
12F34ECN	E13
12F36EC	E13
12F36ECN	E13
12F38EC	E13
12F38HC	E13
12F42EC	E13
12F46EC	E13
12F47HC	E13
12F48EC	E13
12R215PB	E23, K52
12R321PB	K52
12R415PB	E23, K52
12R421PB	K52
14A01B13F0GF	D12
14A11B13F0GF	D12
14E01B13FC	D8, J34
14E03B13FC	D8, J34
14E05B13FC	D8, J34
14E07B13FC	D8, J34
14E11B13FC	D8, J34
14E13B13FC	D8, J34
14E15B13FC	D8, J34
14E17B13FC	D8, J34
14F01BB	D2, J6
14F03BB	D2, J6
14F05BB	D2, J6
14F07BB	D2, J6
14F11BB	D2, J6
14F13BB	D2, J6
14F15BB	D2, J6
14F17BB	D2, J6
14G01B13F0GD	D12
14G11B13F0GD	D12
14R013FC	D6, J18, K2
14R018FC	D6, J18, K2
14R113FC	D6, J18, K2
14R118FC	D6, J18, K2
1527B7916-001	B71
15F12EA	E9, J14
15F1PEA	J14
15F22EA	E9, J14
15F2PEA	J14
15L22NA	E35
15R113FB	J28, K12
15R118FB	J28, K12
15R213FB	J28, K12
15R218FB	J28, K12
161X57-SS	F11, F15
16G32A18A2BC	E45
16L12BE	E37
16L14BE	E37
16L22BE	E37
16L24BE	E37
16L32BE	E37
16L34BE	E37
17B32A18A2BD	E47

Tel: +45 63 12 83 00 | Email: ps@hymatik.com | www.hymatik.com | Hvidkaervej 27a, DK-5250 Odense SV, Denmark

Model No.	Section / Page No.
17B42A18A2BD	E47
17G33A13A4BD	E45
17H44B21A4BD	E47
17L32BE	E39
17L34BE	E39
17L36BE	E39
17L42BE	E39
17L44BE	E39
17L46BE	E39
1834C05-001	B71
18A57	H17, K35
18B57	H19, K37
20R013GC	K104
20R113GC	K104
3393001	M8
3393002	M8
3393003	M8
3393004	M8
35F77BAP	H8, M2
35F77EAP	H10, M2
35F77HAP	H10
35F87BAP	H8, M2
35F87EAP	H10, M2
35F87HAP	H10
4202	H17, K35
4204	H17, K35
4206	K39
43FN7BAP	H8, M2
43FN7EAP	H10, M2
43FN7HAP	H10
45020002	N14
45040004	N14
45060060	N14
45080080	N14
45120012	N14
45160016	N14
47020002	N15
47040004	N15
47060006	N15
47080008	N15
47120012	N15
47160016	N15
47200020	N15
47240024	N15
491366	K87
491367	K87
496449	K88, K89
51R125RA	K42
51R126RA	K42
52R125RA	K44
52R126RA	K44
52R225RA	K44
52R226RA	K44
52R325RA	K44
52R326RA	K44
52R425RA	K44
52R426RA	K44
53R425RA	K46
53R426RA	K46
53R525RA	K46
53R526RA	K46
53R625RA	K46
53R626RA	K46
54R725RA	K48
54R726RA	K48
54R825RA	K48
54R826RA	K48
5500A2004	N8, N16
5500A4004	N8, N16
5500A5013	B71
5500A6004	N16
5500A9004	N8, N16
5500B6004	N8
606Y72	H29, H31
616A28-SS	F5, F9, F13, F17, F19
988A30	N8
A	
AS-10	N17
AS-15	N17
AS-5	N17
AS-6	N17
AS-8	N17
ASN-10	N17
ASN-15	N17
ASN-6	N17
ASN-8	N17
B	
B344-01AGC	J32
B344-01DGC	J32
B344-02AGC	J32
B344-02DGC	J32
BK504SY	J33
BK504Y	J33
BK505SY	J33
BK505Y	J33
BK603B	H3, H5, H7, H13, H29, H31
BK603C	H13
BK605WB	H3, H5, H7
BK606X30B	H29, H31
BK609WB	H29, H31
C	
C10A1304	G7, G11, K33
C10A1308	G7, G11, K33
C10A1317	G7, G11, K33
C11A33	G3, G5, G11, G13
C628-06FRLEJCE	H34
C628-06FRLWJCW	H34
C628-08FRLEJCE	H34
C628-08FRLWJCW	H34
C628-12FRLEJCE	H34
C628-12FRLWJCW	H34
CB-M12-4P-2M	B40, B41, K72, K73
CKR10YSS	F13, F17
CKR11YSS	F13, F17
CKR354YSS	F11, F15
CKR364T	K107
CKR364Y-1SS	F11, F15
D	
DC604-2	N4
DC604-4	N4
DC604-6	N4
DD15-02	M7
DD15-03	M7
DD15-04	M7
DD15-06	M7
DD30-04	M7
DD30-06	M7
DD30-08	M7
DD60-04	M7
DD60-06	M7
DD60-08	M7
DP2-02-001	H9, H11
DP276-P	H13
DP3-01-000	H9
DPG-Kit	H14
DRD1000-A46036014EI	M2, M5
DRD1200-A46036014EI	M2, M5
DRD1600-4A6036014EI	M5
DRD1600-A46036014EI	M2
DRD2000-A46036014EI	M2, M5

Model No.	Section / Page No.
DRD2400-A46036014EI	M2, M5
DRD325-A23036014EI	M2, M5
DRD325-A46036014EI	M2
DRD400-A23036014EI	M2, M5
DRD400-A46036014EI	M2
DRD500-A23036014EI	M2, M5
DRD500-A46036014EI	M2
DRD700-A23036014EI	M2, M5
DRD700-A46036014EI	M2
DRD800-A23036014EI	M2, M5
DRD800-A46036014EI	M2
DRP-14-447/003	M8
DRP-14-447/006	M8
DRP-14-447/012	M8
DTK606	H29, H31
E	
ECS3	N19
ECS5	N19
ED3002N115-K	N3
ED3004N115-K	N3
ED3007N115-K	N3
ED3030N115-K	N3
ED3100N115-K	N3
EFI	L3
EK504VY	F3, F15
EK504Y	F3, F15
EK55G	F5
EK55J	F5
EK602B	H3, H5
EK602G	H7
EK602VB	H3, H5
EKF10VY	F17
EKF10Y	F17
EKF501H	F7
EKF71	F9
EM100	N14
EM12	N14
EM125	N14
EM150	N14
EM25	N14
EM37	N14
EM50	N14
EM75	N14
EMM5	N14
ES100MC	N8, N15
ES125MC	N8, N15
ES12MC	N15
ES150MC	N8, N15
ES200MC	N8
ES25MC	N8, N15
ES37MC	N8, N15
ES50MC	N8, N15
ES75MC	N8, N15
ESB100MC	N15
ESB125MC	N15
ESB12MC	N15
ESB150MC	N15
ESB25MC	N15
ESB37MC	N15
ESB50MC	N15
ESB75MC	N15
EZ03NB6	N6
EZ04NB6	N6
EZ06NB6	N6
EZ06NBA	N6
EZ08NBA	N6
EZ0ANBA	N6
F	
F442001	B51, B53, B55, C17, C27, D11, E36, E38, E40, E42, E44, G13, H29, H31, H33, J41, J43
F442002	B51, B53, B55, C17, C27, D11, E36, E38, E40, E42, E44, G13, H29, H31, H33, J41, J43
F442003	B51, B53, B55, C17, D11 E36, E38, E40, E42, E44, G13 H29, H31, H33, J41, J43
F442005	B51, B53, B55, C17, D11 E36, E38, E40, E42, E44, G13 H29, H31, H33, J41, J43
F602-06EJ	H2
F602-06EJR	H2
F602-06WJ	H2
F602-06WJR	H2
F602-08EJ	H2
F602-08EJR	H2
F602-08WJ	H2
F602-08WJR	H2
F602-12EJ	H4
F602-12EJR	H4
F602-12WJ	H4
F602-12WJR	H4
F602-16EJ	H6
F602-16EJR	H6
F602-16WJ	H6
F602-16WJR	H6
F701-06E3P	H12
F701-06E7P	H12
F701-06L3P	H12
F701-06L7P	H12
F701-08E3P	H12
F701-08E7P	H12
F701-08L3P	H12
F701-08L7P	H12
F701-C3-0773	H13
F701-C3-0774	H13
F701-C7-0773	H13
F701-C7-0774	H13
FRP-95-505	H9
FRP-95-508	H9
FRP-96-729	J33
G	
GRP-95-022	H9, H11
GRP-95-111	J23, J33, K7
GRP-95-260	K43, K45
GRP-95-261	K47
GRP-95-262	K49
GRP-95-392	H9, H11
GRP-95-393	H9, H11
GRP-95-981	H9, H11
GRP-96-717	J23, J33, K7
GRP-96-718	J23, J33, K7
GRP-96-725	J23, J33, K7
GRP-96-726	J23, J33, K7
H	
HDF-120-NPT-A	H14, L5
K	
K352413B	K80
K352428B	K80
K352429B	K80
K4510N18060	B21, B23, B82, J17, K17, K19
K4510N18160	B21, B23, B82, J17, K17, K19
K4511SCR04B	B21, B25, B27, B29, B43, B82, J17, J31, K17, K23, K25
K4511SCR060	B21, B25, B27, B29, B43, B82, J17, J31, K17, K23, K25
K4511SCR11B	B21, B25, B27, B29, B43, B82, J17, J31, K17, K23, K25
K4511SCR160	B21, B25, B27, B29, B43, B71, B82, J17, J31, K17, K23, K25

Tel: +45 63 12 83 00 | Email: ps@hymatik.com | www.hymatik.com | Hvidkaervej 27a, DK-5250 Odense SV, Denmark

Model No.	Section / Page No.
K4515N14030	E16, E26, J37, K15, K21
K4515N14060	E16, E26, J37, K15, K21
K4515N14160	E16, E26, J37, K15, K21
K4515N14160SS	F11, F15
K4515N14300	E16, E26, J37, K15, K21
K4515N18030	B21, B82, D7, D9, J17, J19, J21, J29, J35, K3, K5, K13, K17
K4515N18060	B21, B82, D7, D9, J17, J19, J21, J23, J29, J33, J35, K3, K5, K7, K13, K17
K4515N18160	B21, B82, D7, D9, J17, J19, J21, J23, J29, J33, J35, K3, K5, K7, K13, K17
K4517N14160D	E18, E20, E22, E24, E29, E32, E34, G7, G9, G11, H17, H19, H21, H23, H25, H27, K23, K27, K33, K35, K37, K41, K51, K53, K55, K57, K59, K61
K4520N14030	B25, B27, B29, B31, B45, B47, B49, B82, K23, K25, K29
K4520N14060	B25, B27, B29, B31, B45, B47, B49, B82, D7, E16, E18, E20, E22, E24, E26, E29, E32, E34, G7, G9, G11, H17, H19, H21, H23, H25, J19, J29, J37, K3, K13, K15, K21, K23, K23, K25, K27, K29, K33, K35, K37, K51, K53, K55, K57, K59, K61
K4520N14160	B25, B27, B29, B31, B45, B47, B49, B82, C9, C27, D7, E16, E18, E20, E22, E24, E26, E29, E32, E34, G7, G9, G11, H17, H19, H21, H23, H25, H27, J19, J29, J37, K3, K13, K15, K21, K23, K23, K25, K27, K29, K31, K33, K35, K37, K41, K51, K53, K55, K57, K59, K61
K4520N14160SS	F13, F17
K4520N14300	B25, B27, B29, B31, B45, B47, B49, B82, C9, C27, E16, E18, E20, E22, E24, E26, E29, E32, E34, G7, G9, G11, H17, H19, H21, H23, H25, H27, J37, K15, K21, K23, K23, K25, K27, K29, K31, K33, K35, K37, K41, K51, K53, K55, K57, K59, K61

L

L01369	D7, J19, J29, K3, K13
L606-06E	H28
L606-06G	H28
L606-06W	H28
L606-08E	H28
L606-08G	H28
L606-08W	H28
L606-12E	H30
L606-12G	H30
L606-12W	H30
L606C14	H29, H31
LV2N2BSS	N5
LV2N3B	N5
LV3N3B	N5
LV3N4BSS	N5
LV3N6B	N5
LV4N4BSS	N5
LV4N6B	N5
LV6N6B	N5
LV6N8BSS	N5
LV6NAB	N5
LV8N8BSS	N5
LV8NAB	N5
LVANAB	N5
LVBNCB	N5
LVBNCBSS	N5
LVCNCB	N5
LVCNCBSS	N5

M

MSP-95-502	H11
MSP-95-876	H11
MTP-95-502	H11
MTP-95-562	H11

P

P01173	D7, D9, J19, J21, J29, J35, K3, K5, K13
P01174	D7, D9, J19, J21, J29, J35, K3, K5, K13
P01175	D7, D9, J19, J21, J29, J35, K3, K5, K13
P01176	D7, D9, J19, J21, J29, J35, K3, K5, K13
P01265	D7, D9, J19, J35, K3
P01531	D7, J19, J29, K3, K13
P01698	E18, E20, E29, E32, E34, K23, K27
P02934	E16, E26, J37, K21
P04062	E18, E20, E29, E32, E34, K23, K27
P04063	E18, E20, E29, E32, E34, K23, K27
P04064	E18, E20, E29, E32, E34, K23, K27
P04069B	E18, E20, E29, E32, E34, K23, K27
P04079B	E18, E20, E22, E24, K23, K27, K51, K53
P04082	E18, E20, E22, E24, E29, E32, K23, K27, K51, K53
P04121	E36, E38, E40, E42, E44, G13
P04420	E16, K21
P0442001	K15
P04425	E16, E26, J37, K15, K21
P04426	E16, E26, J37, K15, K21
P04427	E16, E26, J37, K15, K21
P04428	K15
P11912	E38, E40, E42, E44
P2FC6449	B83, C25
P2FCA449	B83, C25
P2FCA453	B83, C25
P2FCB449	B83, C25
P2FCB453	B83, C25
P2FP23N4A	B83, C25
P2FP23N4B	B83, C25
P31CA92GEBN5LNW	B56
P31CA92GEMN5LNW	B56
P31CB92GEBN5LNW	B56
P31CB92GEMN5LNW	B56
P31DA92PPN	B60
P31DA92SGNC1FN	B60
P31DA92SGNC2CN	B60
P31EB92EGBBN5P	B42, J30
P31EB92EGMBN5P	B42, J30
P31EB92EMBBN5P	B42, J30
P31EB92EMMBN5P	B42, J30
P31FB92DGBN	B14, J10
P31FB92DGMN	B14, J10
P31FB92DMBN	B14, J10
P31FB92DMMN	B14, J10
P31FB92EGBN	B8, J4
P31FB92EGMN	B8, J4
P31FB92EMBN	B8, J4
P31FB92EMMN	B8, J4
P31HB92BN5P	B22, K18
P31HB92BNNP	B22, K18
P31KA00CB	B9, B15, B21, B23, B43, B51, B77, J5, J11, J17, J31, J41, K17, K19
P31KA00CY	B82
P31KA00ES9	B15, B80, J11
P31KA00ESA	B15, B80, J11
P31KA00ESC	B15, B80, J11
P31KA00ESE	B9, B43, B80, J5, J31
P31KA00MM	B21, B23, B43, B80, J17, J31, K17, K19
P31KA00MP	B21, B23, B43, B80, J17, J31, K17, K19
P31KA00MT	B9, B15, B21, B23, B43, B51, B77, J5, J11, J17, J31, J41, K17, K19
P31KA00MW	B9, B15, B21, B43, B51,

Tel: +45 63 12 83 00 | Email: ps@hymatik.com | www.hymatik.com | Hvidkaervej 27a, DK-5250 Odense SV, Denmark

Model No.	Section / Page No.
	B77, J5, J11, J17, J31, J41, K17
P31KA00PL	B51, B80, J41
P31KA11CN	B77
P31KA11CP	B77
P31KA12CN	B77
P31KA12CP	B77
P31KA13CN	B77
P31KA13CP	B77
P31KA21CN	B77
P31KA21CP	B77
P31KA22CN	B77
P31KA22CP	B77
P31KA23CN	B77
P31KA23CP	B77
P31KA91CN	B77
P31KA91CP	B77
P31KA92CN	B77
P31KA92CP	B77
P31KA93CN	B77
P31KA93CP	B77
P31KB00AL	B82
P31KB00AT	B82, J23, K7
P31KB00BGB	B9, B15, B43, B81, J5, J11, J31
P31KB00BGM	B9, B15, B43, B81, J5, J11, J31
P31KB00BGN	B51, B80, J41
P31KB00BMB	B9, B15, B43, B81, J5, J11, J31
P31KB00BMM	B9, B15, B81, J5, J11
P31KB00BMN	B51, B81, J41
P31KB00MR	B21, B23, B43, B77, J17, J31, K17, K19
P31KB00PR	B82
P31KB00PS	B82
P31KB00PT	B82
P31KB00PV	B82
P31KB00RB	B21, B23, B43, B81, J17, J31, K17, K19
P31KB00RC	B21, B23, B43, B81, J17, J31, K17, K19
P31KB00RQ	B15, B80, J11
P31LB92LGNN	B50, J40
P31LB92LMNN	B50, J40
P31MA92022N	B75
P31PA92AD2VD1A	B32, K64
P31QA92GEBN5LNW	B56
P31QA92GEMN5LNW	B56
P31QB92GEBN5LNW	B56
P31QB92GEMN5LNW	B56
P31RB92BN5P	B20, J16, K16
P31RB92BNNP	B20, J16, K16
P31SA92PPN	B62
P31SA92SGNC1FN	B62
P31SA92SGNC2CN	B62
P31SA92Y0N	B62
P31TA92PPN	B64
P31TA92SGNC1FN	B64
P31TA92SGNC2CN	B64
P31VB92LBNN	B74
P32CA92GEANGLNW	B57
P32CA92GEMNGLNW	B57
P32CA93GEANGLNW	B57
P32CA93GEMNGLNW	B57
P32CA94GEANGLNW	B57
P32CA94GEMNGLNW	B57
P32CB92GEANGLNW	B57
P32CB92GEMNGLNW	B57
P32CB93GEANGLNW	B57
P32CB93GEMNGLNW	B57
P32CB94GEANGLNW	B57
P32CB94GEMNGLNW	B57
P32DA94PPN	B60
P32DA94SCNA2CN	B60
P32DA94SCNA3GN	B60
P32EB92EGABNGP	B44
P32EB92EGAPNGP	B46
P32EB92EGMBNGP	B44
P32EB92EGMPNGP	B46
P32EB92ESABNGP	B44
P32EB92ESAPNGP	B46
P32EB92ESMBNGP	B44
P32EB92ESMPNGP	B46
P32EB93EGABNGP	B44
P32EB93EGAPNGP	B46
P32EB93EGMBNGP	B44
P32EB93EGMPNGP	B46
P32EB93ESABNGP	B44
P32EB93ESAPNGP	B46
P32EB93ESMBNGP	B44
P32EB93ESMPNGP	B46
P32EB94EGABNGP	B44
P32EB94EGAPNGP	B46
P32EB94EGMBNGP	B44
P32EB94EGMPNGP	B46
P32EB94ESABNGP	B44
P32EB94ESAPNGP	B46
P32EB94ESMBNGP	B44
P32EB94ESMPNGP	B46
P32FB92DGAN	B16
P32FB92DGMN	B16
P32FB92DSAN	B16
P32FB92DSMN	B16
P32FB92EGAN	B10
P32FB92EGMN	B10
P32FB92ESAN	B10
P32FB92ESMN	B10
P32FB93DGAN	B16
P32FB93DGMN	B16
P32FB93DSAN	B16
P32FB93DSMN	B16
P32FB93EGAN	B10
P32FB93EGMN	B10
P32FB93ESAN	B10
P32FB93ESMN	B10
P32FB94DGAN	B16
P32FB94DGMN	B16
P32FB94DSAN	B16, M2
P32FB94DSMN	B16
P32FB94EGAN	B10
P32FB94EGMN	B10
P32FB94ESAN	B10, M2
P32FB94ESMN	B10
P32HB92BNNP	B28, K24
P32HB93BNNP	B28, K24
P32HB94BNNP	B28, K24
P32KA00CB	B11, B13, B17, B19, B25, B27, B29, B31, B45, B47, B49, B53, B55, B71, B78, B79, K23, K25, K29
P32KA00CY	B82
P32KA00DA	B11, B13, B17, B19, B45, B47, B49, B80
P32KA00ES9	B17, B80
P32KA00ESA	B17, B80
P32KA00ESC	B17, B80
P32KA00ESE	B11, B45, B47, B80
P32KA00MB	B11, B13, B17, B19, B25, B27, B29, B31, B45, B47, B49, B53, B55, B63, B65, B71, B78, B79, K23, K25, K29
P32KA00ML	B11, B17, B53, B63, B65, B78
P32KA00MM	B25, B27, B29, B45, B47, B80, K23, K25
P32KA00MP	B25, B27, B29, B45, B47, B80, K23, K25
P32KA00MT	B11, B17, B19, B25, B27, B29, B31, B45, B47, B49, B53, B55, B63,

Tel: +45 63 12 83 00 | Email: ps@hymatik.com | www.hymatik.com | Hvidkaervej 27a, DK-5250 Odense SV, Denmark

Model No.	Section / Page No.
	B65, B71, B78, B79, K23, K25, K29
P32KA00PG	B51, B53, B55, J41
P32KA00PH	B80
P32KA00PL	B53, B55, B80
P32KA00RQ	B17, B19, B80
P32KA12CP	B78, B79
P32KA13CP	B78, B79
P32KA14CP	B71, B78, B79
P32KA16CP	B71, B78, B79
P32KA22CP	B78, B79
P32KA23CP	B78, B79
P32KA24CP	B71, B78, B79
P32KA26CP	B71, B78, B79
P32KA92CP	B78, B79
P32KA93CP	B78, B79
P32KA94CP	B71, B78, B79
P32KA96CP	B71, B78, B79
P32KB00AL	B82
P32KB00AT	B82
P32KB00BGA	B81
P32KB00BGM	B11, B17, B45, B47, B81
P32KB00BGN	B53, B80
P32KB00BMA	B81
P32KB00BMM	B81
P32KB00BMN	B53, B81
P32KB00BSA	B81
P32KB00BSM	B11, B17, B45, B47, B81
P32KB00BSN	B53, B81
P32KB00MR	B25, B27, B29, B45, B47, B78, K23, K25
P32KB00PR	B82
P32KB00PS	B82
P32KB00PT	B82
P32KB00PV	B82
P32KB00RB	B25, B27, B29, B45, B47, B81, K23, K25
P32KB00RC	B25, B27, B29, B45, B47, B81, K23, K25
P32LB92LGNN	B52
P32LB92LSNN	B52
P32LB93LGNN	B52
P32LB93LSNN	B52
P32LB94LGNN	B52
P32LB94LSNN	B52
P32MA94024N	B75
P32PA92AD2VD1A	B32, K64
P32QA92GEANGLNW	B57
P32QA92GEMNGLNW	B57
P32QA93GEANGLNW	B57
P32QA93GEMNGLNW	B57
P32QA94GEANGLNW	B57
P32QA94GEMNGLNW	B57
P32QB92GEANGLNW	B57
P32QB92GEMNGLNW	B57
P32QB93GEANGLNW	B57
P32QB93GEMNGLNW	B57
P32QB94GEANGLNW	B57
P32QB94GEMNGLNW	B57
P32RB92BNGP	B24, K22
P32RB92BNNP	B24, K22
P32RB92PNGP	B26
P32RB92PNNP	B26
P32RB93BNGP	B24, K22
P32RB93BNNP	B24, K22
P32RB93PNGP	B26
P32RB93PNNP	B26
P32RB94BNGP	B24, K22
P32RB94BNNP	B24, K22
P32RB94PNGP	B26
P32RB94PNNP	B26
P32SA94PPN	B62
P32SA94SCNA2CN	B62
P32SA94SCNA3GN	B62
P32SA94Y0N	B62
P32TA94PPN	B64
P32TA94SCNA2CN	B64
P32TA94SCNA3GN	B64
P32VB93LBNN	B74
P32VB94LBNN	B74
P33CA94GEANGLNW	B58
P33CA94GEMNGLNW	B58
P33CA96GEANGLNW	B58
P33CA96GEMNGLNW	B58
P33CB94GEANGLNW	B58
P33CB94GEMNGLNW	B58
P33CB96GEANGLNW	B58
P33CB96GEMNGLNW	B58
P33EA94EGABNGP	B48
P33EA94EGMBNGP	B48
P33EA94ESABNGP	B48
P33EA94ESMBNGP	B48
P33EA96EGABNGP	B48
P33EA96EGMBNGP	B48
P33EA96ESABNGP	B48
P33EA96ESMBNGP	B48
P33FA94DGAN	B18
P33FA94DGMN	B18
P33FA94DSAN	B18
P33FA94DSMN	B18
P33FA94EGAN	B12
P33FA94EGMN	B12
P33FA94ESAN	B12
P33FA94ESMN	B12
P33FA96DGAN	B18
P33FA96DGMN	B18
P33FA96DSAN	B18, M2
P33FA96DSMN	B18
P33FA96EGAN	B12
P33FA96EGMN	B12
P33FA96ESAN	B12, M2
P33FA96ESMN	B12
P33KA00BGA	B81
P33KA00BGM	B13, B19, B49, B81
P33KA00BGN	B55, B80
P33KA00BMA	B81
P33KA00BMM	B81
P33KA00BMN	B55, B81
P33KA00BSA	B81
P33KA00BSM	B13, B19, B49, B81
P33KA00BSN	B55, B81
P33KA00ES9	B19, B80
P33KA00ESA	B19, B80
P33KA00ESC	B19, B80
P33KA00ESE	B13, B49, B80
P33KA00ML	B13, B19, B55, B79
P33KA00MM	B31, B49, B80, K29
P33KA00MP	B31, B49, B80, K29
P33KA00MR	B31, B49, B79, K29
P33KA00MT	B13
P33KA00PR	B82
P33KA00PS	B82
P33KA00PT	B82
P33KA00PV	B82
P33KA00RB	B31, B49, B81, K29
P33KA00RC	B31, B49, B81 ,K29
P33LA94LGNN	B54
P33LA94LSNN	B54
P33LA96LGNN	B54
P33LA96LSNN	B54
P33MA96024N	B75
P33QA94GEANGLNW	B58
P33QA94GEMNGLNW	B58
P33QA96GEANGLNW	B58
P33QA96GEMNGLNW	B58
P33QB94GEANGLNW	B58

Model No.	Section / Page No.
P33QB94GEMNGLNW	B58
P33QB96GEANGLNW	B58
P33QB96GEMNGLNW	B58
P33RA94BNGP	B30, K28
P33RA94BNNP	B30, K28
P33RA96BNGP	B30, K28
P33RA96BNNP	B30, K28
P33TA96RG4F2CN	B70
P33TA96RG4G2CN	B70
P33VB94LBNN	B74
P33VB96LBNN	B74
P3A-RN91YNN	J20
P3A-RN91YNN	K4
P3BA20812	K100, K102
P3BA20822	K100, K102
P3BA20823	K100
P3EA63242NS	K98
P3EA63252NS	K98
P3HKA00MC	B40, B61, K72
P3HKA00ML	B40, B61, K72
P3KKA00MC	B41, K73
P3KKA00ML	B41, K73
P3NCA96SGMNNLNA	G14
P3NCA98SGMNNLNA	G14
P3NCA9PSGMNNLNA	G14
P3NCB96SGMNNLNA	G14
P3NCB98SGMNNLNA	G14
P3NCB9PSGMNNLNA	G14
P3NEA96GSABNN	G10
P3NEA96GSMBNN	G10
P3NEA98GSABNN	G10
P3NEA98GSMBNN	G10
P3NEA9PGSABNN	G10
P3NEA9PGSMBNN	G10
P3NFA96DSA	G4
P3NFA96DSM	G4
P3NFA96GSA	G2
P3NFA96GSM	G2
P3NFA98DSA	G4
P3NFA98DSM	G4
P3NFA98GSA	G2
P3NFA98GSM	G2
P3NFA9PDSA	G4, M2
P3NFA9PDSM	G4
P3NFA9PGSA	G2 ,M2
P3NFA9PGSM	G2
P3NKA00BSA	G3, G5, G11
P3NKA00BSM	G3, G5, G11, G13
P3NKA00BSN	G13
P3NKA00ESA	G3, G11
P3NKA00ESCB	G5
P3NKA00ESE	G3, G11
P3NKA00ESG	G3, G11
P3NKA00MW	E51, G3, G5, G7, G9, G11, G13, G15, K33, K55
P3NKA00PD	G9, K55
P3NKA00PE	G3, G5, G11, G13
P3NKA00PK	G13
P3NKA00PL	G13
P3NKA00PM	G15
P3NKA00PN	G7, G11, K33
P3NKA00RL	G13
P3NKA00RN	G7, G11, K33
P3NKA00RR	G7, G11, K33
P3NKB16CL	G15
P3NKB16CP	G15
P3NKB18CL	G15
P3NKB18CP	G15
P3NKB1BCL	G15
P3NKB1BCP	G15
P3NKB96CL	G15
P3NKB96CP	G15
P3NKB98CL	G15
P3NKB98CP	G15
P3NKB9BCL	G15
P3NKB9BCP	G15
P3NLA96LSN	G12
P3NLA98LSN	G12
P3NLA9PLSN	G12
P3NRA96BNG	G6, K32
P3NRA96BNN	G6, K32
P3NRA96BPP	G8, K54
P3NRA98BNG	G6, K32
P3NRA98BNN	G6, K32
P3NRA98BPP	G8, K54
P3NRA9PBNG	G6, K32
P3NRA9PBNN	G6, K32
P3NRA9PBPP	G8, K54
P3RA10232	K92
P3RA10232BP	K94
P3RA10242	K92
P3RA10242BP	K94
P3RA10262	K92
P3RA10262BP	K94
P3RA17132NNKN	K96
P3RA30232	K90
P3RA30242	K90
P3RA30252	K90
P3TFA92WAAN	L2, L4
P3TFA93WBAN	L2, L4
P3TFA94WCAN	L2, L4, M2
P3TFA96WDAN	L2, L4, M2
P3TFA98WEAN	L2, L4, M2
P3TFA9BWGAN	L2, L4, M2
P3TFA9CWHAN	L2, L4, M2
P3TFA9EWKAN	L2, L4, M2
P3TFAFFD2AN	H14, M2
P3TFAFFQ2AN	H14, M2
P3TFAFFW2AN	L5, M2
P3TFAFGD3AN	H14, M2
P3TFAFGQ3AN	H14, M2
P3TFAFGW3AN	L5, M2
P3TKA00MWA	L4
P3TKA00MWB	L4
P3TKA00MWD	L4
P3TKA00MWF	L4
P3TKA00MWJ	L4
P3XKA00AS	C15, C27
P3YCA96SEANFLNF	C18
P3YCA96SECNFLNF	C18
P3YCA98SEANFLNF	C18
P3YCA98SECNFLNF	C18
P3YCB96SEANFLNF	C18
P3YCB96SECNFLNF	C18
P3YCB98SEANFLNF	C18
P3YCB98SECNFLNF	C18
P3YEA96ESABNEN	C14
P3YEA96ESABNFN	C14
P3YEA96ESCBNEN	C14
P3YEA96ESCBNFN	C14
P3YEA98ESABNEN	C14
P3YEA98ESABNFN	C14
P3YEA98ESCBNEN	C14
P3YEA98ESCBNFN	C14
P3YFA96DSAN	C6
P3YFA96DSCN	C6
P3YFA96ESAN	C4
P3YFA96ESCN	C4
P3YFA98DSAN	C6, M2
P3YFA98DSCN	C6
P3YFA98ESAN	C4, M2
P3YFA98ESCN	C4
P3YKA00BSA	C5, C7, C15, C27
P3YKA00BSC	C5, C7, C15, C27

Tel: +45 63 12 83 00 | Email: ps@hymatik.com | www.hymatik.com | Hvidkaervej 27a, DK-5250 Odense SV, Denmark

Model No.	Section / Page No.
P3YKA00BSN	C17, C27
P3YKA00CB	C27
P3YKA00CW	C27
P3YKA00ESA	C7, C27
P3YKA00ESC	C7, C27
P3YKA00ESE	C5, C15, C27
P3YKA00ESG	C5
P3YKA00MM	C9, C15, C27, K31
P3YKA00MS	C9, C15, C27, K31
P3YKA00PL	C17, C27
P3YKA00RN	C9, C15, C27, K31
P3YKA00RQ	C7, C27
P3YKA00RR	C9, C15, C27, K31
P3YKA08CY	C27
P3YLA96LSNN	C16
P3YLA98LSNN	C16
P3YMA1V0N	C24
P3YMA9V0N	C24
P3YPA96BD2VA2A	C12
P3YPA98BD2VA2A	C12
P3YRA96BNEN	C8, K30
P3YRA96BNFN	C8, K30
P3YRA96BPPN	C10, K62
P3YRA98BNEN	C8, K30
P3YRA98BNFN	C8, K30
P3YRA98BPPN	C10, K62
P3YSA96Y0N	C22
P3YSA98Y0N	C22
P3YTA96PPN	C20
P3YTA96SCNA2CN	C20
P3YTA98PPN	C20
P3YTA98SCNA2CN	C20
P4CG4201D003	K82
P4CN2001C001	K82
P4CN4001C001	K82
P4GAA92	N13
P4GAA93	N13
P4GAA94	N13
P4GAA96	N13
P4GAA98	N13
P4GBA92	N13
P4GBA93	N13
P4GBA94	N13
P6G-PR10040	B21, B23, B25, B27, B29, B82, J17, K17, K19, K23, K25
P6G-PR10110	B21, B23, B25, B27, B29, B82, J17, K17, K19, K23, K25
P6G-PR90060	B21, B23, B25, B27, B29, B82, J17, K17, K19, K23, K25
P6G-PR90160	B21, B23, B25, B27, B29, B82, J17, K17, K19, K23, K25
P6M-PAB1	N18
P6M-PAB2	N18
P6M-PAB3	N18
P6M-PAB4	N18
P6M-PAB6	N18
P6M-PAB8	N18
P6M-PAC5	N18
P78652	D7, D9, J19, J21, J29, J35, K3, K5, K13
PB11-04WJCRSS	F16
PB11-04WJCSS	F16
PB12-04WJCRSS	F16
PB12-04WJCSS	F16
PB548-02DHCSS	F14
PB558-02DHCSS	F14
PCKR364T	K105
PCKR364Y	K105
PF10-04WJRSS	F4
PF10-04WJSS	F4
PF11-04WJRSS	F8
PF11-04WJSS	F8
PF501-02DHRSS	F6
PF501-02DHSS	F6
PF504-02DHRSS	F2
PF504-02DHSS	F2
PL10-04DSS	F18
PL10-04WSS	F18
PPS1-2C3-RHM	N8
PPS1-2C3-RWL	N8
PR10-04CSS	F12
PR11-04CSS	F12
PR354-02CSS	F10
PR364-02CSS	F10
PRKR163Y	K105
PRKR164Y	K105
PS09921	K93, K95, K97, K101
PS12125-1	K93
PS12125-4	K93
PS12127-1	K95
PS12163	K91
PS12165	K93, K95, K99
PS16116-13	K91
PS16116-14	K91
PS19513-11	K101
PS19513-11I	K101
PS19513-12	K101
PS19513-13	K101
PS19549-1	K103
PS19549-1E	K103
PS19549-2	K103
PS19549-20E	K103
PS19549-3	K103
PS19968-NR	K99
PS2028BP	B84, C26
PS2028JBP	B84
PS2028JCP	B84, C26
PS203279BP	B84, C26
PS203283BP	B84, C26
PS2032J79CP	B84, C26
PS2032J83CP	B84, C26
PS20966-9	K97
PS20967-1	K97
PS21667-1	K91
PS2429BP	B84, C26
PS2429JBP	B84, C26
PS243079BP	B84, C26
PS243083BP	B84, C26
PS2430J79BP	B84, C26
PS2430J83BP	B84, C26
PS2932BP	B84, K80
PS2932JBP	B84, E10, E12, E14, J15, K80
PS294675BP	K80
PS294679BP	B84, C26, K80
PS294683BP	B84, C26, K80
PS2946J75BP	K80
PS2946J79BP	B84, C26, K80
PS2946J83BP	B84, C26, K80
PS2982B42P	K80
PS2982B45P	K80
PS2982B49P	B83, K80
PS2982B53P	B83, K80
PS3202B42P	K80
PS3202B45P	K80
PS3202B49P	K80
PS3202B53P	K80
PS401P	D3, D9, J7, J35
PS403P	D3, D9, J7, J35
PS404P	D3, D5, D9, J7, J13, J35
PS407P	D3, J7
PS408BP	D3, D5, D9, J7, J13, J35
PS417BP	D3, D5, D7, D9, D13, E51, J7, J13, J19, J21, J29, J35, K3, K5, K13
PS419	D11, D13, E51, J43

Tel: +45 63 12 83 00 | Email: ps@hymatik.com | www.hymatik.com | Hvidkaervej 27a, DK-5250 Odense SV, Denmark

Model No.	Section / Page No.
PS420P	D11, J43
PS421P	D11, J43
PS424BP	J29, K13
PS426P	D7, D9, J19, J21, J29, J35, K3, K5, K13
PS428P	D7, D9, J19, J21, J29, J35, K3, K5, K13
PS434	J39
PS435	J39
PS436	J3
PS446P	D5, J13
PS447BP	D3, D5, D9, D11, J7, J13, J35, J43
PS451BP	D3, D5, D9, J7, J13, J35
PS452P	D3, D9, J7, J35
PS454B	J29, K13
PS456P	D5, J13
PS506P	E6, E8, E12, E14, E29, E32, E34, G3, G5, G11
PS512P	E3, E6, E8, E10, E12, E14, E26, E29, E32, E34, E36, E38, E40, E42, E44, G3, G5, G11, G13
PS512P	J15, J37
PS602P	H27, K41
PS603P	H27, K41
PS604P	H27, K41
PS605P	H27, K41
PS607P	H33
PS610P	H33
PS612P	H33
PS613P	H33
PS626P	H27, K41
PS627	H27, K41
PS701P	E6, E29
PS702P	E6, E29
PS705P	E6, E12, E29, E38, E42
PS707P	E18, E22, E29, E51
PS707P	K23, K51
PS708P	E18
PS708P	K23
PS708RP	E18
PS708RP	K23
PS709P	E18
PS709P	K23
PS710P	E29
PS711P	E29
PS713P	E22, E29, K51
PS715P	E18, E20, E29, E32, E34, K23, K27
PS716P	E38, E40, E42, E44
PS717P	E38, E42
PS718P	E42, E44
PS719P	E38, E42
PS720P	E42
PS722P	E6, E12, E29
PS723P	E6, E12, E29
PS724P	E12
PS726P	E6, E12, E29
PS728P	E38
PS729P	E38, E42
PS730P	E12
PS731P	E6, E29
PS732P	E6, E12, E29
PS734P	E6, E12, E29
PS735P	E6, E12, E29
PS737P	E18, E20, E29, E32, E34, K23, K27
PS738P	E42, E44
PS739P	E38, E40
PS740N	E38, E40, E42, E44, F19, G13
PS740P	E36, E38, E40, E42, E44, G13
PS741P	E42, E44
PS742P	E38, E40
PS743P	E6, E12, E38, E42, E51
PS745P	E22, E24, K51, K53
PS746P	E38, E42
PS747P	E22, K51
PS748P	E38, E40
PS749P	E22, K51
PS750P	E50
PS751P	E50
PS752P	E50
PS755P	E49
PS756P	E49
PS757P	E49
PS764	E10, J15
PS765P	E50
PS766P	E50
PS767P	E50
PS781P	E10, E12, E14, G3, G5, J15
PS801P	E8, E32
PS802P	E8, E32
PS805P	E8, E14, E32, E40, E44
PS807P	E20, E24, E32, E34, E51, K27, K53
PS808P	E20, K27
PS808RP	E20, K27
PS809P	E20, K27
PS810P	E32
PS811P	E32
PS813P	E24, E32, K53
PS817P	E40, E44
PS819P	E40, E44
PS820P	E40, E44
PS822P	E8, E14, E32
PS823P	E8, E14, E32
PS824P	E14
PS826P	E8, E14, E32, E34
PS829P	E40, E44
PS830P	E14
PS831P	E8, E32
PS832P	E8, E14, E32
PS834P	E8, E14, E32, E34
PS835P	E8, E14, E32
PS843P	E8, E14, E40, E44, E51
PS846P	E40, E44
PS847P	E24, K53
PS849P	E24, K53
PS850P	E50
PS851P	E50
PS852P	E50
PS853P	E50
PS854P	E49
PS856P	E49
PS857P	E49
PS860P	E50
PS865P	E50
PS866P	E50
PS867P	E50
PS884P	E34
PS885P	E34
PS886P	E34
PS901P	E3, E26, J37
PS902P	E26, J37
PS905P	E3, E10, E26, E36, J15, J37
PS907P	K15
PS908P	E16, E26, J37, K21
PS910P	K15
PS914P	E3, E6, E8, E10, E12, E14, E26, E36, J15, J37
PS915P	E16, E26, J37, K21
PS924P	E10, J15
PS931P	E3, E26, J37
PS932P	E3, E10, E26, J15, J37
PS943P	E3, E10, E36, E51, J15
PS946P	E36
PS948P	E36

Tel: +45 63 12 83 00 | Email: ps@hymatik.com | www.hymatik.com | Hvidkaervej 27a, DK-5250 Odense SV, Denmark

Model No.	Section / Page No.
PS954P	E49
PS955P	E49
PS963P	E16, E26, E51, J37, K15, K21
PS964P	E16, E26, J37, K15, K21
PS995P	E3, E10, E26, J15, J37
PS998P	E3, E10, E26, J15, J37

R

R05X51	J27, K11
R05X51-A	J23, J25, J27, J33, K7, K9, K11, K105
R05X51-P	F11, F15, J23, J25, J33, K7, K9, K105, K107, K109
R05X51-SS	F11, F15
R10X51-P	F13, F17
R10X51-SS	F13, F17
R10Y57-SS	F13, F17
R119-02C	H16, K34
R119-02CG	H16, K34
R119-02J	H20
R119-02J/M2	K56
R119-03C	H16, K34
R119-03CG	H16, K34
R119-03J	H20
R119-03J/M2	K56
R119-04C	H16, K34
R119-04CG	H16, K34
R119-04J	H20
R119-04J/M2	K56
R119-06C	H18, K36, K37
R119-06CG	H18, K36
R119-06J	H22
R119-06J/M2	K58
R119-08C	H18, K36, K37
R119-08CG	H18, K36
R119-08J	H22, K58
R119-12C	H18, K36, K37
R119-12CG	H18, K36
R119-12J	H22
R119-12J/M2	K58
R119-16J	H24, K60
R119-20J	H24, K60
R216-02F	K38
R216-02FP	K38
R216-03F	K38
R216-03FP	K38
R24-01CK	K106
R24-02CK	K106
R25-01C	J24, K8
R25-02C	J24, K8
R342-0MA	J22, K6
R342-0MB	J22, K6
R342-0MC	J22, K6
R344-01A	J22, K6
R344-01AG	J22, K6
R344-01B	J22, K6
R344-01BG	J22, K6
R344-01C	J22, K6
R344-01CG	J22, K6
R344-02A	J22, K6
R344-02AG	J22, K6
R344-02B	J22, K6
R344-02BG	J22, K6
R344-02C	J22, K6
R344-02CG	J22, K6
R45-02C	J26, K10
R45-03C	J26, K10
R46-02CK	K108
R46-03CK	K108
RK118A	H17, K35
RK118B	H19, K37
RK118D	H19, K37
RK118X20A	H21, K57
RK118X20B	H23, K59
RK118X20D	H23, K59
RK118X20Y	H21, K57
RK118Y	H17, K35
RK119A	H17, K35
RK119A250	H17, K35
RK119B	H19, K37
RK119D	H19 ,K37
RK119G	H25, K61
RK119X20A	H21, K57
RK119X20B	H23, K59
RK119X20D	H23, K59
RK119X20Y	H21, K57
RK119Y	H17, K35
RK216KY	K39
RK216Y	K39
RK504SY	J33
RK504SY-SS	F3, F7, F15
RK548YSS	F15
RK549YSS	F15
RK602B	H3
RK602C	H5, H7
RK602D	H3, H5, H7
RK602MD	H3, H5, H7
RK606SY	H29, H31
RK606Y	H29, H31
RK701P	H13
RKB605WB	H3, H5, H7, H29, H31
RKB606X30B	H29, H31
RKC 4.5T-2/S1587	B71, C13
RKC119Y	H17, K35
RKC8T-2	K88
RKDD15-02-06	M8
RKDD30-03-08	M8
RKDD60-03-08	M8
RKL10SS	F19
RKR10KYSS	F13, F17
RKR10YSS	F13, F17
RKR24KY	K107
RKR24Y	K107
RKR25KY	J25, K9
RKR25Y	J25, K9
RKR364KYSS	F11
RKR364YSS	F11
RKR45KY	J27, K11, K109
RKR45Y	J27, K11, K109
RRP-16-005-000	J33
RRP-16-024	K43, K45, K47, K49
RRP-95-024	K49
RRP-95-151	K45
RRP-95-152	K47
RRP-95-153	K49
RRP-95-192	K45, K47, K49
RRP-95-585	K43, K45, K47, K49
RRP-95-765	K43
RRP-95-766	K45, K47, K49
RRP-95-905	K43, K45, K47, K49
RRP-95-906	K43, K45, K47, K49
RRP-95-914	K45
RRP-96-934	K43, K45
RRP-96-935	K47, K49
RSC 4.5T-2/S1587	B71

S

SA10MDSS	F5, F9, F17
SA15Y57	H17, K35
SA161X57	J23, J25, J27, J33, K7, K9, K11, K105, K107, K109
SA200AW57	H3, H13, H29
SA200CW57	H3, H13, H29, M8
SA600Y7-1	H3, H5, H7, H13

Tel: +45 63 12 83 00 | Email: ps@hymatik.com | www.hymatik.com | Hvidkaervej 27a, DK-5250 Odense SV, Denmark

Model No.	Section / Page No.
SA600Y7-1SS	F3, F5, F7, F15, F17, F19
SA602A7	H3, H5, H7
SA602D	H3, H5, H7
SA602MD	H3, H5, H7
SA603D	H3, H5, H7
SA702MD	H13
SAC18A3/BK	H17, K35
SAP05481	F3, F5, F7, F15, F17, F19
SKED3000N115	N3
SPE0100-A11516016TIU	M2, M4
SPE010-A11516016TIU	M2, M4
SPE0125-A11516016TIU	M2, M4
SPE0150-A11516016TIU	M2, M4
SPE015-A11516016TIU	M2, M4
SPE0175-A11516016TIU	M2, M4
SPE0175-A23016016TIU	M2, M4
SPE0200-A23016014TIU	M2, M4
SPE0250-A23016014TIU	M2, M4
SPE025-A11516016TIU	M2, M4
SPE035-A11516016TIU	M2, M4
SPE050-A11516016TIU	M2, M4
SPE075-A11516016TIU	M2, M4
SPR-375-1	J25, K9, K107
SPR-375-2-SS	F11, F15
SPR-376	J25, K9, K107
SPR-376-1-SS	F11, F15
SPR-377	J25, K9, K107
SPR-377-1-SS	F11, F15
SPR-388-1-SS	F13, F17
SPR-389-1-SS	F13, F17
SPR-390-1-SS	F13, F17
SPR-46	J27, K11, K109
SPR-47	J27, K11, K109
SPR-48	J27, K11, K109

T

TW101BN14NNN	M9, M12
TW131BN14NNN	M9, M12
TW201BN14NNN	M9, M12
TW251BN14NNN	M9, M12
TW301BN14NNN	M9, M12
TW401BN14NNN	M9, M12
TW41BN14NNN	M9, M12
TW501BN14NNN	M9, M12
TW56BN14NNN	M9, M12
TW601BN14NNN	M9, M12
TW76BN14NNN	M9, M12
TW801BN14NNN	M9, M12
W21540172B	K74
W21540175B	K74
W21540179B	K74
W21540183B	K74
W21542172B	K74
W21542175B	K74
W21542179B	K74
W21542183B	K74
W21544172B	K74
W21544175B	K74
W21544179B	K74
W21544183B	K74
WDV3-G12BL	N2
WDV3-G13BL	N2
WDV3-G14BL	N2
WDV3-G22BL	N2
WDV3-G23BL	N2
WDV3-G24BL	N2
WDV3-G34BL	N2

Tel: +45 63 12 83 00 | Email: ps@hymatik.com | www.hymatik.com | Hvidkaervej 27a, DK-5250 Odense SV, Denmark

Safety Guide For Selecting And Using Pneumatic Division Products And Related Accessories

⚠ WARNING:

FAILURE OR IMPROPER SELECTION OR IMPROPER USE OF PNEUMATIC DIVISION PRODUCTS, ASSEMBLIES OR RELATED ITEMS ("PRODUCTS") CAN CAUSE DEATH, PERSONAL INJURY, AND PROPERTY DAMAGE. POSSIBLE CONSEQUENCES OF FAILURE OR IMPROPER SELECTION OR IMPROPER USE OF THESE PRODUCTS INCLUDE BUT ARE NOT LIMITED TO:

- Unintended or mistimed cycling or motion of machine members or failure to cycle
- Work pieces or component parts being thrown off at high speeds.
- Failure of a device to function properly for example, failure to clamp or unclamp an associated item or device.
- Explosion
- Suddenly moving or falling objects.
- Release of toxic or otherwise injurious liquids or gasses.

Before selecting or using any of these Products, it is important that you read and follow the instructions below.

1. GENERAL INSTRUCTIONS

1.1. Scope: This safety guide is designed to cover general guidelines on the installation, use, and maintenance of Pneumatic Division Valves, FRLs (Filters, Pressure Regulators, and Lubricators), Vacuum products and related accessory components.

1.2. Fail-Safe: Valves, FRLs, Vacuum products and their related components can and do fail without warning for many reasons. Design all systems and equipment in a fail-safe mode, so that failure of associated valves, FRLs or Vacuum products will not endanger persons or property.

1.3 Relevant International Standards: For a good guide to the application of a broad spectrum of pneumatic fluid power devices see: ISO 4414:1998, Pneumatic Fluid Power – General Rules Relating to Systems. See www.iso.org for ordering information.

1.4. Distribution: Provide a copy of this safety guide to each person that is responsible for selection, installation, or use of Valves, FRLs or Vacuum products. Do not select, or use Parker valves, FRLs or vacuum products without thoroughly reading and understanding this safety guide as well as the specific Parker publications for the products considered or selected.

1.5. User Responsibility: Due to the wide variety of operating conditions and applications for valves, FRLs, and vacuum products Parker and its distributors do not represent or warrant that any particular valve, FRL or vacuum product is suitable for any specific end use system. This safety guide does not analyze all technical parameters that must be considered in selecting a product. The user, through its own analysis and testing, is solely responsible for:

- Making the final selection of the appropriate valve, FRL, Vacuum component, or accessory.
- Assuring that all user's performance, endurance, maintenance, safety, and warning requirements are met and that the application presents no health or safety hazards.
- Complying with all existing warning labels and / or providing all appropriate health and safety warnings on the equipment on which the valves, FRLs or Vacuum products are used; and,
- Assuring compliance with all applicable government and industry standards.

1.6. Safety Devices: Safety devices should not be removed, or defeated.

1.7. Warning Labels: Warning labels should not be removed, painted over or otherwise obscured.

1.8. Additional Questions: Call the appropriate Parker technical service department if you have any questions or require any additional information. See the Parker publication for the product being considered or used, or call 1-800-CPARKER, or go to www.parker.com, for telephone numbers of the appropriate technical service department.

2. PRODUCT SELECTION INSTRUCTIONS

2.1. Flow Rate: The flow rate requirements of a system are frequently the primary consideration when designing any pneumatic system. System components need to be able to provide adequate flow and pressure for the desired application.

2.2. Pressure Rating: Never exceed the rated pressure of a product. Consult product labeling, Pneumatic Division catalogs or the instruction sheets supplied for maximum pressure ratings.

2.3. Temperature Rating: Never exceed the temperature rating of a product. Excessive heat can shorten the life expectancy of a product and result in complete product failure.

2.4. Environment: Many environmental conditions can affect the integrity and suitability of a product for a given application. Pneumatic Division products are designed for use in general purpose industrial applications. If these products are to be used in unusual circumstances such as direct sunlight and/or corrosive or caustic environments, such use can shorten the useful life and lead to premature failure of a product.

2.5. Lubrication and Compressor Carryover: Some modern synthetic oils can and will attack nitrile seals. If there is any possibility of synthetic oils or greases migrating into the pneumatic components check for compatibility with the seal materials used. Consult the factory or product literature for materials of construction.

2.6. Polycarbonate Bowls and Sight Glasses: To avoid potential polycarbonate bowl failures:

- Do not locate polycarbonate bowls or sight glasses in areas where they could be subject to direct sunlight, impact blow, or temperatures outside of the rated range.
- Do not expose or clean polycarbonate bowls with detergents, chlorinated hydro-carbons, keytones, esters or certain alcohols.
- Do not use polycarbonate bowls or sight glasses in air systems where compressors are lubricated with fire resistant fluids such as phosphate ester and di-ester lubricants.

Parker Hannifin Corporation
Pneumatic Division
Richland, Michigan
www.parker.com/pneumatics

Tel: +45 63 12 83 00 | Email: ps@hymatik.com | www.hymatik.com | Hvidkaervej 27a, DK-5250 Odense SV, Denmark

2.7. Chemical Compatibility: For more information on plastic component chemical compatibility see Pneumatic Division technical bulletins Tec-3, Tec-4, and Tec-5

2.8. Product Rupture: Product rupture can cause death, serious personal injury, and property damage.
- Do not connect pressure regulators or other Pneumatic Division products to bottled gas cylinders.
- Do not exceed the maximum primary pressure rating of any pressure regulator or any system component.
- Consult product labeling or product literature for pressure rating limitations.

3. PRODUCT ASSEMBLY AND INSTALLATION INSTRUCTIONS

3.1. Component Inspection: Prior to assembly or installation a careful examination of the valves, FRLs or vacuum products must be performed. All components must be checked for correct style, size, and catalog number. DO NOT use any component that displays any signs of nonconformance.

3.2. Installation Instructions: Parker published Installation Instructions must be followed for installation of Parker valves, FRLs and vacuum components. These instructions are provided with every Parker valve or FRL sold, or by calling 1-800-CPARKER, or at www.parker.com.

3.3. Air Supply: The air supply or control medium supplied to Valves, FRLs and Vacuum components must be moisture-free if ambient temperature can drop below freezing

4. VALVE AND FRL MAINTENANCE AND REPLACEMENT INSTRUCTIONS

4.1. Maintenance: Even with proper selection and installation, valve, FRL and vacuum products service life may be significantly reduced without a continuing maintenance program. The severity of the application, risk potential from a component failure, and experience with any known failures in the application or in similar applications should determine the frequency of inspections and the servicing or replacement of Pneumatic Division products so that products are replaced before any failure occurs. A maintenance program must be established and followed by the user and, at minimum, must include instructions 4.2 through 4.9.

4.2. Installation and Service Instructions: Before attempting to service or replace any worn or damaged parts consult the appropriate Service Bulletin for the valve or FRL in question for the appropriate practices to service the unit in question. These Service and Installation Instructions are provided with every Parker valve and FRL sold, or are available by calling 1-800-CPARKER, or by accessing the Parker web site at www.parker.com.

4.3. Lockout / Tagout Procedures: Be sure to follow all required lockout and tagout procedures when servicing equipment. For more information see: OSHA Standard – 29 CFR, Part 1910.147, Appendix A, The Control of Hazardous Energy – (Lockout / Tagout)

4.4. Visual Inspection: Any of the following conditions requires immediate system shut down and replacement of worn or damaged components:
- Air leakage: Look and listen to see if there are any signs of visual damage to any of the components in the system. Leakage is an indication of worn or damaged components.
- Damaged or degraded components: Look to see if there are any visible signs of wear or component degradation.
- Kinked, crushed, or damaged hoses. Kinked hoses can result in restricted air flow and lead to unpredictable system behavior.
- Any observed improper system or component function: Immediately shut down the system and correct malfunction.
- Excessive dirt build-up: Dirt and clutter can mask potentially hazardous situations.

Caution: Leak detection solutions should be rinsed off after use.

4.5. Routine Maintenance Issues:
- Remove excessive dirt, grime and clutter from work areas.
- Make sure all required guards and shields are in place.

4.6. Functional Test: Before initiating automatic operation, operate the system manually to make sure all required functions operate properly and safely.

4.7. Service or Replacement Intervals: It is the user's responsibility to establish appropriate service intervals. Valves, FRLs and vacuum products contain components that age, harden, wear, and otherwise deteriorate over time. Environmental conditions can significantly accelerate this process. Valves, FRLs and vacuum components need to be serviced or replaced on routine intervals. Service intervals need to be established based on:
- Previous performance experiences.
- Government and / or industrial standards.
- When failures could result in unacceptable down time, equipment damage or personal injury risk.

4.8. Servicing or Replacing of any Worn or Damaged Parts: To avoid unpredictable system behavior that can cause death, personal injury and property damage:
- Follow all government, state and local safety and servicing practices prior to service including but not limited to all OSHA Lockout Tagout procedures (OSHA Standard – 29 CFR, Part 1910.147, Appendix A, The Control of Hazardous Energy – Lockout / Tagout).
- Disconnect electrical supply (when necessary) before installation, servicing, or conversion.
- Disconnect air supply and depressurize all air lines connected to system and Pneumatic Division products before installation, service, or conversion.
- Installation, servicing, and / or conversion of these products must be performed by knowledgeable personnel who understand how pneumatic products are to be applied.
- After installation, servicing, or conversions air and electrical supplies (when necessary) should be connected and the product tested for proper function and leakage. If audible leakage is present, or if the product does not operate properly, do not put product or system into use.
- Warnings and specifications on the product should not be covered or painted over. If masking is not possible, contact your local representative for replacement labels.

4.9. Putting Serviced System Back into Operation: Follow the guidelines above and all relevant Installation and Maintenance Instructions supplied with the valve FRL or vacuum component to insure proper function of the system.

Tel: +45 63 12 83 00 | Email: ps@hymatik.com | www.hymatik.com | Hvidkaervej 27a, DK-5250 Odense SV, Denmark

PARKER-HANNIFIN CORPORATION
OFFER OF SALE

1. Definitions. As used herein, the following terms have the meanings indicated.

Buyer:	means any customer receiving a Quote for Products.
Goods:	means any tangible part, system or component to be supplied by Seller.
Products:	means the Goods, Services and/or Software as described in a Quote.
Quote:	means the offer or proposal made by Seller to Buyer for the supply of Products.
Seller:	means Parker-Hannifin Corporation, including all divisions and businesses thereof.
Services:	means any services to be provided by Seller.
Software:	means any software related to the Goods, whether embedded or separately downloaded.
Terms:	means the terms and conditions of this Offer of Sale.

2. Terms. All sales of Products by Seller are expressly conditioned upon, and will be governed by the acceptance of, these Terms. These Terms are incorporated into any Quote provided by Seller to Buyer. Buyer's order for any Products whether communicated to Seller verbally, in writing, by electronic data interface or other electronic commerce, shall constitute acceptance of these Terms. Seller objects to any contrary or additional terms or conditions of Buyer. Reference in Seller's order acknowledgement to Buyer's purchase order or purchase order number shall in no way constitute an acceptance of any of Buyer's terms or conditions of purchase. No modification to these Terms will be binding on Seller unless agreed to in writing and signed by an authorized representative of Seller.

3. Price; Payment. The Products set forth in the Quote are offered for sale at the prices indicated in the Quote. Unless otherwise specifically stated in the Quote, prices are valid for thirty (30) days and do not include any sales, use, or other taxes or duties. Seller reserves the right to modify prices at any time to adjust for any raw material price fluctuations. Unless otherwise specified by Seller, all prices are F.C.A. Seller's facility (INCOTERMS 2020). All sales are contingent upon credit approval and full payment for all purchases is due thirty (30) days from the date of invoice (or such date as may be specified in the Quote). Unpaid invoices beyond the specified payment date incur interest at the rate of 1.5% per month or the maximum allowable rate under applicable law.

4. Shipment; Delivery; Title and Risk of Loss. All delivery dates are approximate, and Seller is not responsible for damages resulting from any delay. Regardless of the manner of shipment, delivery occurs and title and risk of loss or damage pass to Buyer, upon placement of the Products with the carrier at Seller's facility. Unless otherwise agreed prior to shipment and for domestic delivery locations only, Seller will select and arrange, at Buyer's sole expense, the carrier and means of delivery. When Seller selects and arranges the carrier and means of delivery, freight and insurance costs for shipment to the designated delivery location will be prepaid by Seller and added as a separate line item to the invoice. Buyer shall be responsible for any additional shipping charges incurred by Seller due to Buyer's acts or omissions. Buyer shall not return or repackage any Products without the prior written authorization from Seller, and any return shall be at the sole cost and expense of Buyer.

5. Warranty. The warranty for the Products is as follows: (i) Goods are warranted against defects in material or workmanship for a period of twelve (12) months from the date of delivery or 2,000 hours of use, whichever occurs first; (ii) Services shall be performed in accordance with generally accepted practices and using the degree of care and skill that is ordinarily exercised and customary in the field to which the Services pertain and are warranted for a period of six (6) months from the date of completion of the Services; and (iii) Software is only warranted to perform in accordance with applicable specifications provided by Seller to Buyer for ninety (90) days from the date of delivery or, when downloaded by a Buyer or end-user, from the date of the initial download. All prices are based upon the exclusive limited warranty stated above, and upon the following disclaimer: **EXEMPTION CLAUSE; DISCLAIMER OF WARRANTY, CONDITIONS, REPRESENTATIONS: THIS WARRANTY IS THE SOLE AND ENTIRE WARRANTY, CONDITION, AND REPRESENTATION, PERTAINING TO PRODUCTS. SELLER DISCLAIMS ALL OTHER WARRANTIES, CONDITIONS, AND REPRESENTATIONS, WHETHER STATUTORY, EXPRESS OR IMPLIED, INCLUDING BUT NOT LIMITED TO THOSE RELATING TO DESIGN, NONINFRINGEMENT, MERCHANTABILITY, AND FITNESS FOR A PARTICULAR PURPOSE. SELLER DOES NOT WARRANT THAT THE SOFTWARE IS ERROR-FREE OR FAULT-TOLERANT, OR THAT BUYER'S USE THEREOF WILL BE SECURE OR UNINTERRUPTED. UNLESS OTHERWISE AUTHORIZED IN WRITING BY SELLER, THE SOFTWARE SHALL NOT BE USED IN CONNECTION WITH HAZARDOUS OR HIGH RISK ACTIVITIES OR ENVIRONMENTS. EXCEPT AS EXPRESSLY STATED HEREIN, ALL PRODUCTS ARE PROVIDED "AS IS".**

6. Claims; Commencement of Actions. Buyer shall promptly inspect all Products upon receipt. No claims for shortages will be allowed unless reported to Seller within ten (10) days of delivery. Buyer shall notify Seller of any alleged breach of warranty within thirty (30) days after the date the non-conformance is or should have been discovered by Buyer. Any claim or action against Seller based upon breach of contract or any other theory, including tort, negligence, or otherwise must be commenced within twelve (12) months from the date of the alleged breach or other alleged event, without regard to the date of discovery.

7. LIMITATION OF LIABILITY. IN THE EVENT OF A BREACH OF WARRANTY, SELLER WILL, AT ITS OPTION, REPAIR OR REPLACE THE NON-CONFORMING PRODUCT, RE-PERFORM THE SERVICES, OR REFUND THE PURCHASE PRICE PAID WITHIN A REASONABLE PERIOD OF TIME. **IN NO EVENT IS SELLER LIABLE FOR**

ANY SPECIAL, INDIRECT, INCIDENTAL OR CONSEQUENTIAL DAMAGES INCLUDING ANY LOSS OF REVENUE OR PROFITS, WHETHER BASED IN CONTRACT, TORT OR OTHER LEGAL THEORY. IN NO EVENT SHALL SELLER'S LIABILITY UNDER ANY CLAIM MADE BY BUYER EXCEED THE PURCHASE PRICE PAID FOR THE PRODUCTS.

8. Confidential Information. Buyer acknowledges and agrees that any technical, commercial, or other confidential information of Seller, including, without limitation, pricing, technical drawings or prints and/or part lists, which has been or will be disclosed, delivered or made available, whether directly or indirectly, to Buyer ("Confidential Information"), has been and will be received in confidence and will remain the property of Seller. Buyer further agrees that it will not use Seller's Confidential Information for any purpose other than for the benefit of Seller.

9. Loss to Buyer's Property. Any tools, patterns, materials, equipment or information furnished by Buyer or which are or become Buyer's property ("Buyer's Property"), will be considered obsolete and may be destroyed by Seller after two (2) consecutive years have elapsed without Buyer ordering the Products manufactured using Buyer's Property. Furthermore, Seller shall not be responsible for any loss or damage to Buyer's Property while it is in Seller's possession or control.

10. Special Tooling. "Special Tooling" includes but is not limited to tools, jigs, fixtures and associated manufacturing equipment acquired or necessary to manufacture Goods. Seller may impose a tooling charge for any Special Tooling. Such Special Tooling shall be and remain Seller's property notwithstanding payment of any charges by Buyer. In no event will Buyer acquire any interest in the Special Tooling, even if such Special Tooling has been specially converted or adapted for manufacture of Goods for Buyer and notwithstanding any charges paid by Buyer. Unless otherwise agreed, Seller has the right to alter, discard or otherwise dispose of any Special Tooling or other property owned by Seller in its sole discretion at any time.

11. Security Interest. To secure payment of all sums due from Buyer, Seller retains a security interest in all Products delivered to Buyer and, Buyer's acceptance of these Terms is deemed to be a Security Agreement under the Uniform Commercial Code. Buyer authorizes Seller as its attorney to execute and file on Buyer's behalf all documents Seller deems necessary to perfect Seller's security interest.

12. User Responsibility. Buyer, through its own analysis and testing, is solely responsible for making the final selection of the Products and assuring that all performance, endurance, maintenance, safety and warning requirements of the application of the Products are met. Buyer must analyze all aspects of the application and follow applicable industry standards, specifications, and any technical information provided with the Quote or the Products, such as Seller's instructions, guides and specifications. If Seller provides options of or for Products based upon data or specifications provided by Buyer, Buyer is responsible for determining that such data and specifications are suitable and sufficient for all applications and reasonably foreseeable uses of the Products. In the event Buyer is not the end-user of the Products, Buyer will ensure such end-user complies with this paragraph.

13. Use of Products, Indemnity by Buyer. Buyer shall comply with all instructions, guides and specifications provided by Seller with the Quote or the Products. **Unauthorized Uses**. If Buyer uses or resells the Products in any way prohibited by Seller's instructions, guides or specifications, or Buyer otherwise fails to comply with Seller's instructions, guides and specifications, Buyer acknowledges that any such use, resale, or non-compliance is at Buyer's sole risk. Further, Buyer shall indemnify, defend, and hold Seller harmless from any losses, claims, liabilities, damages, lawsuits, judgments and costs (including attorney fees and defense costs), whether for personal injury, property damage, intellectual property infringement or any other claim, arising out of or in connection with: (a) improper selection, design, specification, application, or any misuse of Products; (b) any act or omission, negligent or otherwise, of Buyer; (c) Seller's use of patterns, tools, equipment, plans, drawings, designs, specifications or other information or things furnished by Buyer; (d) damage to the Products from an external cause, repair or attempted repair by anyone other than Seller, failure to follow instructions, guides and specifications provided by Seller, use with goods not provided by Seller, or opening, modifying, deconstructing, tampering with or repackaging the Products; or (e) Buyer's failure to comply with these Terms. Seller shall not indemnify Buyer under any circumstance except as otherwise provided in these Terms.

14. Cancellations and Changes. Buyer may not cancel or modify, including but not limited to movement of delivery dates for the Products, any order for any reason except with Seller's written consent and upon terms that will indemnify, defend and hold Seller harmless against all direct, incidental and consequential loss or damage and any additional expense. Seller, at any time, may change features, specifications, designs and availability of Products.

15. Limitation on Assignment. Buyer may not assign its rights or obligations without the prior written consent of Seller.

16. Force Majeure. Seller is not liable for delay or failure to perform any of its obligations by reason of events or circumstances beyond its reasonable control. Such circumstances include without limitation: accidents, labor disputes or stoppages, government acts or orders, acts of nature, pandemics, epidemics, other widespread illness, or public health emergency, delays or failures in delivery from carriers or suppliers, shortages of materials, war (whether declared or not) or the serious threat of same, riots, rebellions, acts of terrorism, fire or any reason whether similar to the foregoing or otherwise. Seller will resume performance as soon as practicable after the event of force majeure has been removed. All delivery dates affected by force majeure shall be tolled for the duration of such force majeure and rescheduled for mutually agreed dates as soon as practicable after the force majeure condition ceases to exist. Force majeure shall not include financial distress, insolvency, bankruptcy, or other similar conditions affecting one of the parties, affiliates and/or sub-contractors.

17. Waiver and Severability. Failure to enforce any provision of these Terms will not invalidate that provision; nor will any such failure prejudice either party's right to enforce that provision in the future. Invalidation of any provision of these Terms shall not invalidate any other provision herein and, the remaining provisions will remain in full force and effect.

18. Termination. Seller may terminate any agreement governed by or arising from these Terms for any reason and at any time by giving Buyer thirty (30) days prior written notice. Seller may immediately terminate, in writing, if Buyer: (a) breaches any provision of these Terms, (b) becomes or is deemed insolvent, (c) appoints or has appointed a trustee, receiver or custodian for all or any part of Buyer's property, (d) files a petition for relief in bankruptcy on its own behalf, or one is filed against Buyer by a third party, (e) makes an assignment for the benefit of creditors; or (f) dissolves its business or liquidates all or a majority of its assets.

19. Ownership of Software. Seller retains ownership of all Software supplied to Buyer hereunder. In no event shall Buyer obtain any greater right in and to the Software than a right in the nature of a license limited to the use thereof and subject to compliance with any other terms provided with the Software.

20. Indemnity for Infringement of Intellectual Property Rights. Seller is not liable for infringement of any patents, trademarks, copyrights, trade dress, trade secrets or similar rights ("Intellectual Property Rights") except as provided in this Section. Seller will defend at its expense and will pay the cost of any settlement or damages awarded in an action brought against Buyer based on a third party claim that one or more of the Products sold hereunder infringes the Intellectual Property Rights of a third party in the country of delivery of the Products by Seller to Buyer. Seller's obligation to defend and indemnify Buyer is contingent on Buyer notifying Seller within ten (10) days after Buyer becomes aware of any such claim, and Seller having sole control over the defense of the claim including all negotiations for settlement or compromise. If one or more Products sold hereunder is subject to such a claim, Seller may, at its sole expense and option, procure for Buyer the right to continue using the Products, replace or modify the Products so as to render them non-infringing, or offer to accept return of the Products and refund the purchase price less a reasonable allowance for depreciation. Seller has no obligation or liability for any claim of infringement: (i) arising from information provided by Buyer; or (ii) directed to any Products provided hereunder for which the designs are specified in whole or part by Buyer; or (iii) resulting from the modification, combination or use in a system of any Products provided hereunder. The foregoing provisions of this Section constitute Seller's sole and exclusive liability and Buyer's sole and exclusive remedy for claims of infringement of Intellectual Property Rights.

21. Governing Law. These Terms and the sale and delivery of all Products are deemed to have taken place in, and shall be governed and construed in accordance with, the laws of the State of Ohio, as applicable to contracts executed and wholly performed therein and without regard to conflicts of laws principles. Buyer irrevocably agrees and consents to the exclusive jurisdiction and venue of the courts of Cuyahoga County, Ohio with respect to any dispute, controversy or claim arising out of or relating to the sale and delivery of the Products.

22. Entire Agreement. These Terms, along with the terms set forth in the main body of any Quote, forms the entire agreement between the Buyer and Seller and constitutes the final, complete and exclusive expression of the terms of sale and purchase. In the event of a conflict between any term set forth in the main body of a Quote and these Terms, the terms set forth in the main body of the Quote shall prevail. All prior or contemporaneous written or oral agreements or negotiations with respect to the subject matter shall have no effect. These Terms may not be modified unless in writing and signed by an authorized representative of Seller.

23. Compliance with Laws. Buyer agrees to comply with all applicable laws, regulations, and industry and professional standards, including those of the United States of America, and the country or countries in which Buyer may operate, including without limitation the U.S. Foreign Corrupt Practices Act ("FCPA"), the U.S. Anti-Kickback Act ("Anti-Kickback Act"), U.S. and E.U. export control and sanctions laws ("Export Laws"), the U.S. Food Drug and Cosmetic Act ("FDCA"), and the rules and regulations promulgated by the U.S. Food and Drug Administration ("FDA"), each as currently amended. Buyer agrees to indemnify, defend, and hold harmless Seller from the consequences of any violation of such laws, regulations and standards by Buyer, its employees or agents. Buyer acknowledges that it is familiar with all applicable provisions of the FCPA, the Anti-Kickback Act, Export Laws, the FDCA and the FDA and certifies that Buyer will adhere to the requirements thereof and not take any action that would make Seller violate such requirements. Buyer represents and agrees that Buyer will not make any payment or give anything of value, directly or indirectly, to any governmental official, foreign political party or official thereof, candidate for foreign political office, or commercial entity or person, for any improper purpose, including the purpose of influencing such person to purchase Products or otherwise benefit the business of Seller. Buyer further represents and agrees that it will not receive, use, service, transfer or ship any Products from Seller in a manner or for a purpose that violates Export Laws or would cause Seller to be in violation of Export Laws. Buyer agrees to promptly and reliably provide Seller all requested information or documents, including end-user statements and other written assurances, concerning Buyer's ongoing compliance with Export Laws.

08/20

Tel: +45 63 12 83 00 | Email: ps@hymatik.com | www.hymatik.com | Hvidkaervej 27a, DK-5250 Odense SV, Denmark

Catalog 0700P-8 02/2021

Parker Hannifin Corporation
Pneumatic Division
8676 E. M89
Richland, MI 49083 USA
Tel: 269 629 5000
Applications Engineering: pdnapps@parker.com
Customer Support: pdncustsvc@parker.com
Web site: www.parker.com/pneumatics