hymatik

Index

Parker Pneumatic

"T", "GG", & "SS" Series

Air Control Valves

3-Way, 3-Port, 2-Position
4-Way, 4-Port, 2-Position
4-Way, 5-Port, 2 & 3-Position

Catalog 0620-E/USA
May 2005

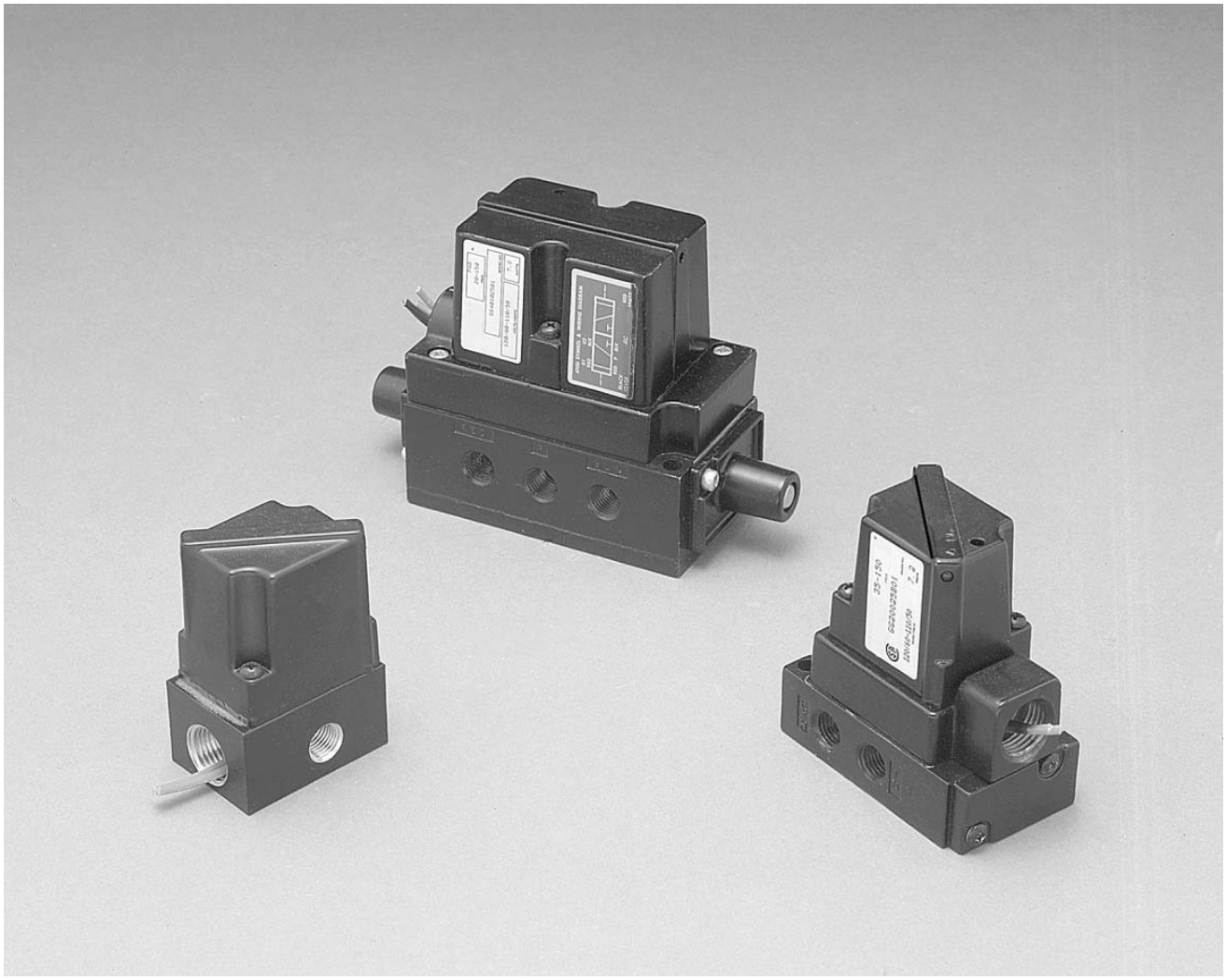

Tel: +45 63 12 83 00 | Email: ps@hymatik.com | www.hymatik.com | Hvidkaervej 27a, DK-5250 Odense SV, Denmark

⚠ WARNING

FAILURE OR IMPROPER SELECTION OR IMPROPER USE OF THE PRODUCTS AND/OR SYSTEMS DESCRIBED HEREIN OR RELATED ITEMS CAN CAUSE DEATH, PERSONAL INJURY AND PROPERTY DAMAGE.

This document and other information from Parker Hannifin Corporation, its subsidiaries and authorized distributors provide product and/or system options for further investigation by users having technical expertise. It is important that you analyze all aspects of your application including consequences of any failure, and review the information concerning the product or system in the current product catalog. Due to the variety of operating conditions and applications for these products or systems, the user, through its own analysis and testing, is solely responsible for making the final selection of the products and systems and assuring that all performance, safety and warning requirements of the application are met.

The products described herein, including without limitation, product features, specifications, designs, availability and pricing, are subject to change by Parker Hannifin Corporation and its subsidiaries at any time without notice.

Offer of Sale

The items described in this document are hereby offered for sale by Parker Hannifin Corporation, its subsidiaries or its authorized distributors. This offer and its acceptance are governed by the provisions stated on the separate page of this document entitled “Offer of Sale”.

© Copyright 2004, Parker Hannifin Corporation. All Rights Reserved

Parker Pneumatic

Parker Hannifin Corporation
Pneumatic Division North America
Richland, Michigan
www.parker.com/pneumatic

"T" Series
- Features, Model Number Index 2
- Model Selection, Dimensions 3
- Cross Reference Information 4

"GG" Series
- Basic Valve Features 5
- Single Solenoid 6
- Historical Model Number Index 6
- Model Selection 7
- Cross Reference Information 8

"SS" Series
- Basic Valve Features 9
- Historical Model Number Index 10
- Single & Double Solenoid 2-Position 11
- Double Solenoid 3-Position 12

Historical "SS" Series
- Single & Double Air Operated 2-Position 13

Historical Dimensions
- 2-Position (SS1200 / SS1400) 14

Manifold
- "SSX" & "SSW 15
- "SSA" 16

Technical Information 17

Dimensions
- 2-Position 18
- 3-Position 18

Service Kits / Part Identification 19-23

Cross Reference Information
- "SS" Series 24-30

Offer of Sale 31

Tel: +45 63 12 83 00 | Email: ps@hymatik.com | www.hymatik.com | Hvidkaervej 27a, DK-5250 Odense SV, Denmark

Description

The T Series Valve is a 2-Position, 2 and 3-Way, single solenoid, direct operated, spring returned, 1/4" side ported valve.

It may be used as normally closed or normally open, also as a selector valve.

Operation

Valve will operate mounted in any position. See mounting dimensions and port locations.

Selection table shows typical piping connections and maximum pressure differentials for each model number. "Maximum Pressure Differential" is the maximum allowable difference between pressures recorded at any two working ports of the valve. The highest pressure that may be connected to any port is 150 PSI.

For 2-Way operation, plugs must be screwed in and sealed bubble tight for valve to work properly.

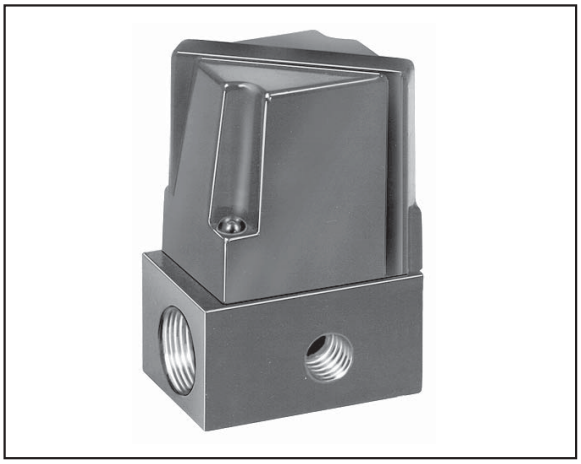

Specifications

- Operating pressure, vacuum to 150 PSI (1035 kPa).
- Operating temperature, 0°F to 140°F (–18°C to 71°C).
- Class B solenoid, dual rated 120V/60Hz., 110V/50Hz., continuous duty 120V/60Hz., 7.2 watts, .26 amp inrush, .14 amp holding. Other voltages available.
- **U.L.** and **CSA** listed.

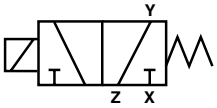

Model Number Index

Basic Series	Operator	Port Size	Lower Orifice Size	Spring	Top Orifice Size	Coil Option	Modification
T	200	25	H	2	F	01	M16

Operator

200	Standard
210	Manual Override

Basic Series

T	Not Lighted
TL	Lighted

Port Size

25	1/4" NPT

Lower Orifice Size

D	1/16"
H	1/8"

Spring

1	0.5 lb.
2	1.5 lb.

Top Orifice Size

F	3/32"

Coil Option

Suffix	Voltage / Hertz
01	120 / 60
02	240 / 60
15	48 VDC
20	24 / 60
21	12 VDC
22	24 VDC
23	125 VDC
34	150 / 60
58	250 VDC
59	120 / 50
63	240 / 50

Modification

M16	72" Leads
M25	72" Leads & Top Seat w/o Shading Coil

Note: Shaded options have been discontinued. Refer to back of Catalog for Cross Reference Information.

Model Selection Information

Service	Maximum Pressure† Differential	Minimum Orifice Dia. Between Ports		C_V Capacity Coefficient For Flow Between Ports				Piping Connections			Valve Model Number
		X & Y	Y & Z	X ⟶ Y	Y ⟶ Z	Z ⟶ Y	Y ⟶ X	Port X	Port Y	Port Z	Standard
2-Way Normally	150 50	1/16" 1/8"	– –	0.09 0.22	– –	– –	– –	Inlet Inlet	Outlet Outlet	Plugged‡ Plugged‡	T20025D2F01 T20025H2F01
2-Way Normally Open	150	–	3/32"	–	0.16	–	–	Plugged‡	Inlet	Outlet	T20025H2F01
3-Way Normally Closed	150 50	1/16" 1/8"	3/32" 3/32"	0.09 0.22	0.16 0.14	– –	– –	Inlet Inlet	Outlet Outlet	Exhaust Exhaust	T20025D2F01 T20025H2F01

† "Maximum Pressure Differential" is the maximum allowable difference between pressures recorded at any two working ports of the valve. The highest pressure that may be connected to any port is 150 PSI.

‡ Plugs must be screwed in and sealed bubble tight for valve to work properly at maximum rated pressure differential.

Model numbers shown are for 120V/60Hz. coil. See Coil Selection Chart for other options.

Solenoid Coil Identification and Specification

Part No.	60 HzAC	50 HzAC	DC
P4615401	120V	110V	–
P4615402	240V	220V	–
P4615421	–	–	12V
P4615422	–	–	24V

Solenoid Service Kits

D1F/H1F PS5398

Consists of: No's 1 thru 8

D2F/H2F PS5399

Consists of: No's 1 thru 8

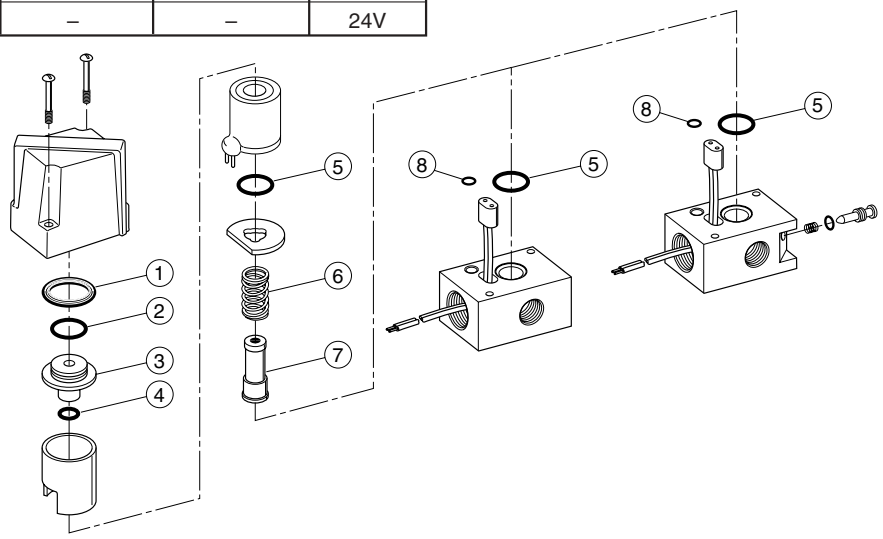

Dimensions – T200

	A	B	C	D	E	F	G	H
inches	1.59	3.31	2.25	.88	.88	.09	.50	.50
mm	40	84	51	22	22	2.4	14	13

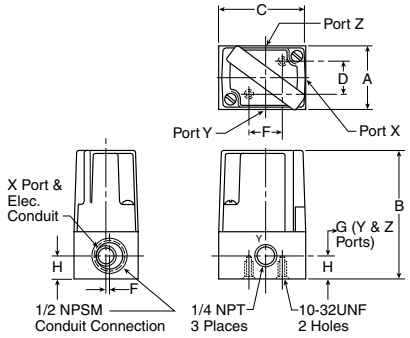

Parker Hannifin Corporation
Pneumatic Division North America
Richland, Michigan
www.parker.com/pneumatic

Tel: +45 63 12 83 00 | Email: ps@hymatik.com | www.hymatik.com | Hvidkaervej 27a, DK-5250 Odense SV, Denmark

Cross Reference

Discontinued T Valve Number	Suggested T Valve Replacement or Kit	Suggested Functional Replacement - Cyclone Series 2-Way NC	2-Way NO	3-Way NC	3-Way NO	Notes
T20025D1F01	Coil P4615401 & PS5398 Kit	741140115B				
T20025D1F21	Coil P4615421 & PS5398 Kit	741140122B				
T20025D1F22	Coil P4615422 & PS5398 Kit	741140123B				
T20025D2F01M16	T20025D2F01 18" Leads	741140115B		744130115B		1
T20025D2F15	Coil P4615415 & PS5399 Kit	NO CROSS REFERENCE VOLTAGE IS 48 VDC				4
T20025D2F20	Coil P4615422 & PS5399 Kit	741140113B		744130113B		
T20025D2F21M25	T20025D2F21					
T20025H1F01	Coil P4615401 & PS5398 Kit	741140115B	740120115B		742110115B	
T20025H1F02	Coil P4615402 & PS5398 Kit	741140116B	740120116B		742110116B	
T20025H1F15	Coil P4615415 & PS5398 Kit	NO CROSS REFERENCE VOLTAGE IS 48 VDC				4
T20025H1F20	Coil P4615420 & PS5398 Kit	741140113B	740120113B		742110113B	
T20025H1F21	Coil P4615421 & PS5398 Kit	741140122B	740120122B		742110122B	
T20025H1F22	Coil P4615422 & PS5398 Kit	741140123B	740120123B		742110123B	
T20025H1F23	Coil P4615423 & PS5398 Kit	NO CROSS REFERENCE VOLTAGE IS 125 VDC				4
T21025D1F01	Coil P4615401 & PS5398 Kit	741140115B				2
T21025D2F01	T20025D2F01 no override	741140115B		744130115B		2
T21025D2F02	T20025D2F02 no override	741140116B		744130116B		2
T21025D2F15	Coil P4615415 & PS5399 Kit	NO CROSS REFERENCE VOLTAGE IS 48 VDC				4
T21025D2F20	Coil P4615420 & PS5399 Kit	741140113B		744130113B		2
T21025D2F21	T20025D2F21 no override	741140122B		744130122B		2
T21025D2F22	T20025D2F22 no override	741140123B		744130123B		2
T21025D2F23	Coil P4615423 & PS5398 Kit	NO CROSS REFERENCE VOLTAGE IS 125 VDC				4
T21025H1F01	Coil P4615401 & PS5398 Kit	741140115B	740120115B		742110115B	2
T21025H1F02	Coil P4615402 & PS5398 Kit	741140116B	740120116B		742110116B	2
T21025H1F22M16	Coil P4615422 & PS5398 Kit	741140123B	740120123B		742110123B	1, 2
T21025H2F01	T20025H2F01 no override	741140115B	740120115B	744130115B		
T21025H2F02	T20025H2F02 no override	741140116B	740120116B	744130116B		
T21025H2F22	T20025H2F22 no override	741140123B	740120123B	744130123B		
TL20025D2F01	T20025D2F01 no light	741140115B		744130115B		3
TL20025H1F01M16	Coil P4615401 & PS5398 Kit	741140115B	740120115B		742110115B	1, 3
TL21025D2F01	T20025D2F01 no light/override	741140115B		744130115B		2, 3
TL21025D2F01M16	T20025D2F01 no light/override 18"	741140115B		741130115B		1, 2, 3

Notes

1. The M16 Modification is 72" leads. The valve selected has 19" leads.
2. The T210 valve has a Non-Locking Manual Override. The valve selected has no Override.
3. The TL valve had an Indicator Light. The valve selected has No Light.
4. Use Repair Kits to Service Valve.

Tel: +45 63 12 83 00 | Email: ps@hymatik.com | www.hymatik.com | Hvidkaervej 27a, DK-5250 Odense SV, Denmark

- Low power consumption, continuous duty coil. Molded nylon coil protects windings from moisture and corrosion.
- Single piece spool with molded Buna N seals. Provides millions of trouble free cycles.
- Easy to maintain – spool can be removed from valve without disturbing any plumbing or wiring.
- Large internal air passages provide high air flow capacities.
- Compact inline, for easy mounting.
- Porting, 1/4 inch.
- Single solenoid, spring return.
- C_V = .9.
- 35 to 150 PSIG (242 to 1035 kPa) operating pressure standard.
- Operating temperature range: 0°F to 140°F (-18°C to 71°C) ambient.

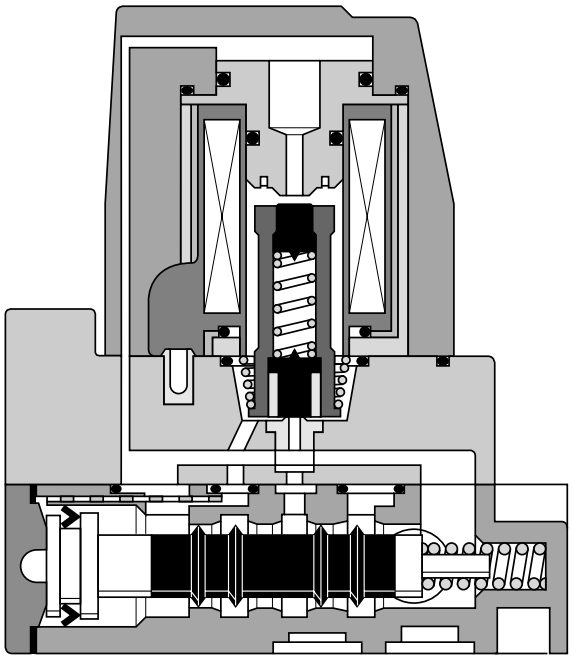

Single Solenoid Pilot GG-200B

Tel: +45 63 12 83 00 | Email: ps@hymatik.com | www.hymatik.com | Hvidkaervej 27a, DK-5250 Odense SV, Denmark

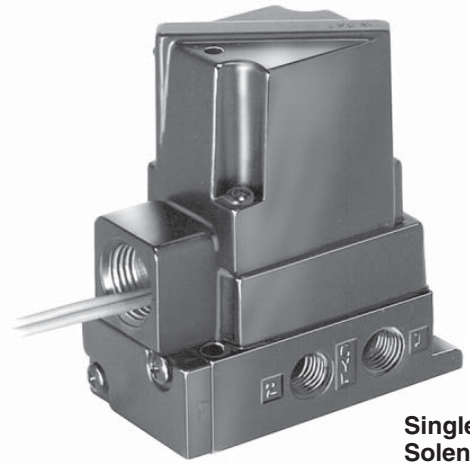

Single Solenoid

Application

These valves are used to operate double acting cylinders. They may also be used as 2-Way or 3-Way valves by plugging ports. Valves are actuated by a maintained electrical contact.

Mounting

These valves are designed for inline mounting.

Operation

De-energized – P to 02 - 01 to E.

Energized/Pressurized – P to 01 - 02 to E.

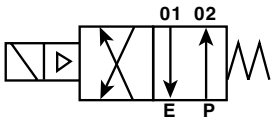

Model Selection Information

Port Size	Valve	Model Number
1/4" NPTF	Solenoid	**GG20025B01**

Historical Model Number Index

Basic Series	Indicator Light	Valve Function	Porting	Port Size	Engineering Level	Voltage	Modification
GG	–	20	0	25	B	01	–

Indicator Light

Blank	w/o Indicator Light
L	With Indicator Light (Voltage Suffix 01 & 02 Only)

Valve Function

20	Single Solenoid Operated with Conduit Connection

Porting

0	Side 1/4" NPT
2	Bottom "O" ring

Port Size

25	1/4 inch

Engineering Level

B	Current

Voltage / Frequency

Suffix	60Hz.	50Hz.	DC
01	120V	110V	—
02	240V	220V	—
15	—	—	48V
20	24V	22V	—
21	—	—	12V
22	—	—	24V
23	—	—	125V
58	—	—	250V
59	—	120V	—

Voltage Range +10/-15% Nominal

Modification

Blank	No Modification
M01	Non-Locking Manual Override with 72 inch Leads
M02	Non-Locking Manual Override
M03	Locking Manual Override with 72 inch Leads
M04	Knob Type Non-Locking Manual Override
M05	Knob Type Locking Manual Override
M06	Knob Type Locking Manual Override with 72 inch Leads
M13	Locking Manual Override
M16	72 inch Leads

Note: Shaded options have been discontinued. Refer to back of Catalog for Cross Reference Information.

Parker Pneumatic

Parker Hannifin Corporation
Pneumatic Division North America
Richland, Michigan
www.parker.com/pneumatic

Tel: +45 63 12 83 00 | Email: ps@hymatik.com | www.hymatik.com | Hvidkaervej 27a, DK-5250 Odense SV, Denmark

Inline – Side Ports 1/4" NPT

GG-200 Single Solenoid Pilot Maintained Contact 2-Position, 4-Way, 4-Ported.

Dimensions:

	inches	mm
A	3.44	87
B	3.88	99
C	.99	25
D	.50	13
E	2.75	70
F	.88	22
G	1.00	25
H	1.95	50
J	.28	7
K	1.44	37
L	3.50	89
M	1.60	41
N	.19	5
P	.70	17
Q Dia.	.28	7

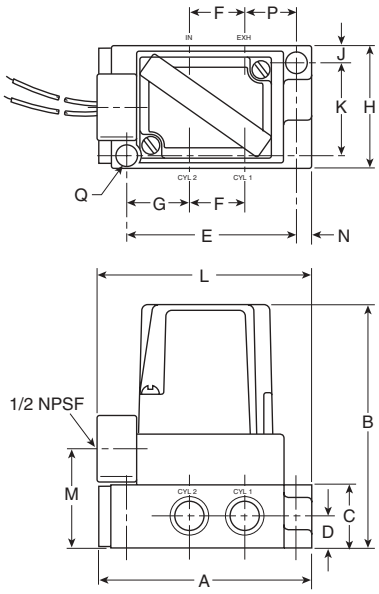

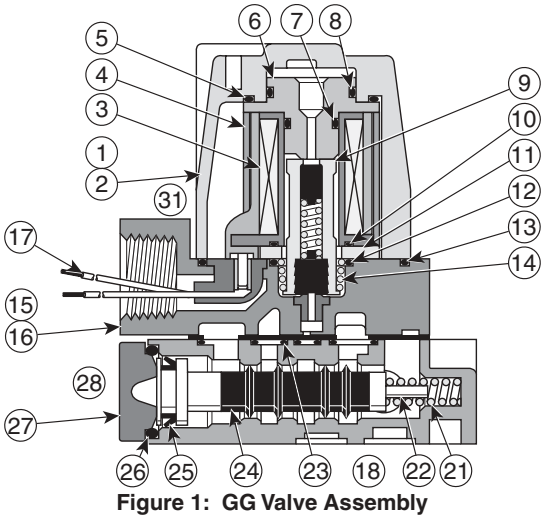

Figure 1: GG Valve Assembly

Service Kits Available

Valve Body Service Kit:
(consists of items # 21, 22, 24, 25, 26, & 28) PS5386

Solenoid Service Kit:
(consists of items # 5, 6, 7, 8, 9, 10, 13, & 14) PS5387

Note: Two kits are required to service a double solenoid valve.

Manual Override Kits:
Flush Style - Non-Locking PL78668
Knob Style - Locking PL78671

Parts Identification List

Item #	Description
1	Solenoid Assembly
2	Solenoid Cover with captive mounting screws
3	Solenoid Coil
4	Flux Sleeve
5	Compression Gasket
6	Top Seat
7	Small O-ring for top seat
8	Large O-ring for top seat
9	Solenoid Plunger Assembly
10	O-ring for coil
11	Flux Plate
12	O-ring for flux plate
13	Molded Gasket for solenoid cover to conduit adapter
14	Spring for plunger
15	Conduit Adapter Assembly
16	Conduit Body
17	Electrical Leads
18	Mounting Screws - conduit body to valve body (not shown)
19	Valve Body Assembly
20	Valve Body
21	Return Spring
22	Spring Guide Pin
23	Molded Gasket for valve body to conduit body
24	Stem Assembly
25	Lip Seal
26	Molded Gasket for end cap to valve body
27	End Cover
28	Mounting Screws - end cap to valve body (not shown)
29	Solenoid Coil With Indicator Lamp
30	Solenoid Cover With Lens Assembly
31	Cover Mounting Screws (not shown)

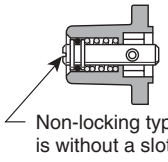

Figure 2:
Flush Style Manual Override

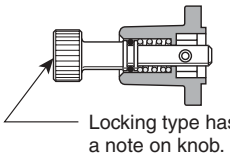

Figure 3:
Knob Style Manual Override

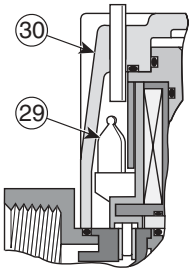

Figure 4:
Indicator Lamp

Parker Hannifin Corporation
Pneumatic Division North America
Richland, Michigan
www.parker.com/pneumatic

Tel: +45 63 12 83 00 | Email: ps@hymatik.com | www.hymatik.com | Hvidkaervej 27a, DK-5250 Odense SV, Denmark

Cross Reference

Obsolete GG Valve	Suggested Replacement	Notes	Alternate GG Valve	Notes
GG20025B01M01	F3E12BGB23A		GG20025B01M02	3
GG20025B01M03	F3E12BHB23A		GG20025B01M13	3
GG20025B01M04	F3E12BJA23A		GG20025B01M02	4
GG20025B01M06	F3E12BGB23A		GG20025B01M05	3
GG20025B01M16	F3E12BGB23A		GG20025B01	3
GG20025B02M01	F3E12BGB87A		GG20025B02M02	3
GG20025B02M03	F3E12BHB87A		GG20025B02M05	3, 5
GG20025B15	NO CROSS VOLTAGE 48VDC	2	N/A	2
GG20025B20	F3E12BGA12A		N/A	2
GG20025B22M01	F3E12BGB19A		GG20025B22M02	3
GG20025B22M04	F3E12BJA19A		GG20025B22M02	4
GG20025B22M16	F3E12BGB19A		GG20025B22	3
GG20025B23	NO CROSS VOLTAGE 125VDC	2	N/A	2
GG20225B01	F3E52BGA23A	1	N/A	2
GG20225B01M01	F3E52BGB23A	1	N/A	2
GG20225B01M02	F3E52BGA23A	1	N/A	2
GG20225B01M03	F3E52BHB23A	1	N/A	2
GG20225B01M05	F3E52BKA23A	1	N/A	2
GG20225B01M06	F3E52BKB23A	1	N/A	2
GG20225B01M16	F3E52BGB23A	1	N/A	2
GG20225B02M05	F3E52BKA87A	1	N/A	2
GG20225B02M05	F3E52BKA87A	1	N/A	2
GG20225B21	F3E52BGA15A	1	N/A	2
GG20225B22	F3E52BGA19A	1	N/A	2
GG20225B22M01	F3E52BGB19A	1	N/A	2
GG20225B22M04	F3E52BJA19A	1	N/A	2
GG20225B22M04	F3E52BJA19A	1	N/A	2
GGL20025B01	F3E12BGA23A		GG20025B01	6
GGL20025B01M01	F3E12BGB12A		GG20025B01M02	3, 6
GGL20025B01M02	F3E12BGA23A		GG20025B01M02	6
GGL20025B01M05	F3E12BJA23A		GG20025B01M05	6
GGL20025B01M13	F3E12BKA23A		GG20025B01M05	6
GGL20025B02	F3E12BGA87A		GG20025B02	6
GGL20225B01M02	F3E52BGA23A	1	N/A	2
GGL20225B01M06	F3E52BKB23A	1	N/A	2

Notes

1. The GG202 Valve is a Bottom Ported Valve for Manifold Mounting. Review of Application is Required. The F3 Valve Selected is a Valve Attached to a Manifold Base.
2. Use Repair Kits to Service the Valve.
3. The GG Valve selected has 18" Leads instead of 72" Leads.
4. Flush type override instead of Knob type.
5. Knob type override instead of Flush type.
6. The same without lights

Parker Hannifin Corporation
Pneumatic Division North America
Richland, Michigan
www.parker.com/pneumatic

Tel: +45 63 12 83 00 | Email: ps@hymatik.com | www.hymatik.com | Hvidkaervej 27a, DK-5250 Odense SV, Denmark

- A Shur-Shift Chamber, with internal pilot supply, delivers positive shifting even during line fluctuations.
- Molded comb-o-seals gives you all the advantages of multiple o-ring sealing with a single gasket.
- The encapsulated Class B coil is a low wattage, quick disconnect type, available in a range of AC and DC voltages.
- Packed spool construction means reduced wear and increased life.
- Inline models are field convertible from single pressure to dual pressure.
- Two mounting styles are available to choose from: Inline base (SS Series) or manifold (SSX or SSW Series), the Add-A-Fold system.

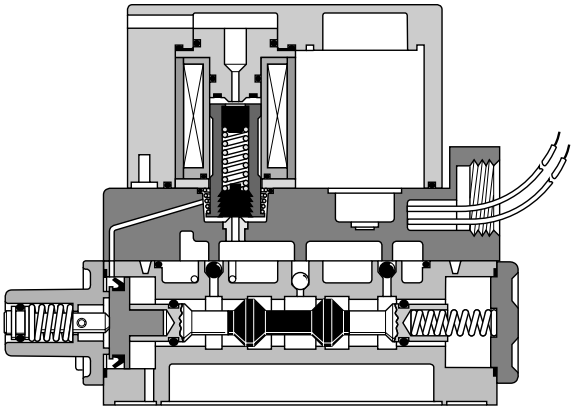

SS2010 Single Solenoid

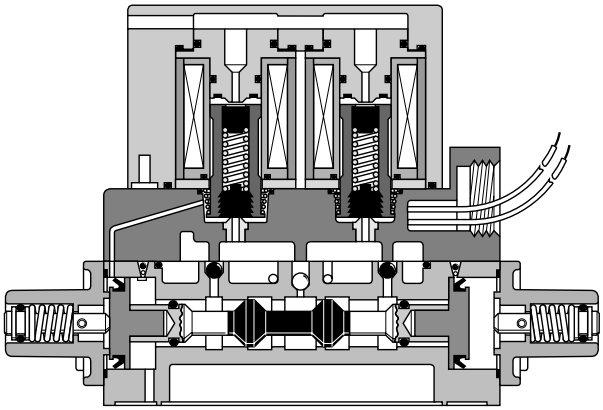

SS4010 Double Solenoid

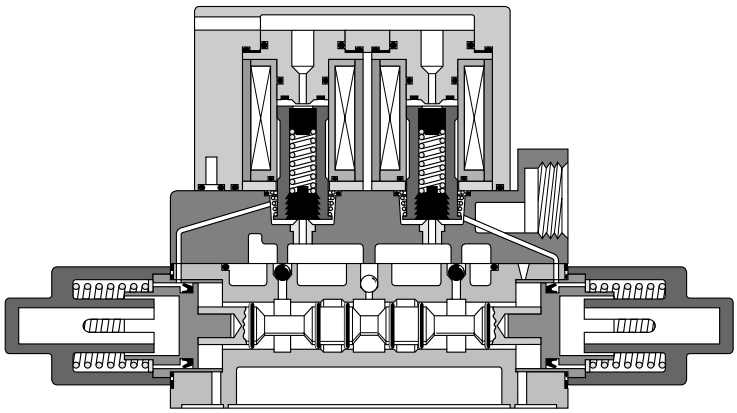

SS5010 Double Solenoid

Tel: +45 63 12 83 00 | Email: ps@hymatik.com | www.hymatik.com | Hvidkaervej 27a, DK-5250 Odense SV, Denmark

Basic Series	Indicator Light	Valve Operator	Options	Functions	Port Size	Voltage / Frequency	Modification
SS	L	20	0	0	37	01	M1

Indicator Light

L	Light Required
Blank	No Light

Basic Series

SS	Inline Valve; Side Ports or .34 Dia. Bottom Ports (O-Ring Gaskets); #0, 2, 3, 6 Functions Only; Electrical Leads in Conduit Port
SSA	Valve Only (No Base); .34 Dia. Bottom Ports Only (O-Ring Gaskets); 2-Position - #2 Function Only; 3-Position - #2, 5, 8 Functions Only
SSX	Manifold Valve; End Ports (Cylinder Only); Common Exhaust (Manifolded); #1 & 2 Functions Only; Electrical Leads in Base
SSW	Manifold Valve; End Ports (Cylinder and Exhaust); Individual Exhaust Ports; #1 & 2 Functions Only; Electrical Leads in Base

Options

0	No Manual Overrides
1	Non-Locking Manual Overrides, Flush Type
2†	Locking Manual Overrides, Flush Type - Screwdriver Slot
3*	72" Electrical Leads, No Overrides
4*	72" Electrical Leads, Non-Locking Overrides - Flush Type
5*	72" Electrical Leads with Locking Overrides, Flush Type - Screwdriver Slot
6*	72" Electrical Leads with Non-Locking Overrides, Knob Type
7	Non-Locking Manual Overrides, Knob Type (2-Position Only)
8	Locking Manual Overrides, Knob Type (2-Position Only)
9*	72" Electrical Leads, Locking Manual Overrides, Knob Type (2-Position Only)

* Not available in SSA Series valves.

† Not Available with 3-Position "50" & "60".

Port Size

25	1/4" NPT - SS Series Only
37	3/8" NPT - SS, SSA, SSX, & SSW
50	1/2" NPT - SS Series Only

Voltage / Frequency Class "B" Solenoid

Suffix	60Hz.	50Hz.	DC
01	120V	110V	—
02	240V	220V	—
15	—	—	48V
20	24V	22V	—
21	—	—	12V
22	—	—	24V
23	—	—	125V
34	150V	—	—
54	10V	—	—
57	—	—	185V
58	—	—	250V
59	—	120V	—

Valve Operator

12	Single Air Pilot, Spring Return, 2-Position
14	Double Air Pilot, Detented, 2-Position
15	Double Air Pilot, Spring Centered, All Ports Blocked, 3-Position
16	Double Air Pilot, Spring Centered, Cylinder Ports Open to Red and Black, 3-Position
20	Single Solenoid, Spring Return, 2-Position
40	Double Solenoid, Detented, 2-Position
50	Double Solenoid, Spring Centered, All Ports Blocked, 3-Position
60	Double Solenoid, Spring Centered, Cylinder Ports Open to Red and Black, 3-Position

Functions

Single Pressure (Standard)

0	Side Ports - SS Series Only
1	1/4" Bottom Port "P" (SSX & SSW Only)
2	SS, SSA: .34 Dia. Bottom Ports (O-Ring Gaskets); SSX, SSW: End Ports Only

Dual Pressure (SS & SSA Only)

3	Red Port Highest Pressure; Side Porting - SS Series Only
5	Red Port Highest Pressure SSA Series Only
6	Black Port Highest Pressure; Side Porting - SS Series Only
8	Black Port Highest Pressure SSA Series Only

Modification

Blank	No Modification (3-Position Only)
M1	Bottom Ported, External Supply and Electrical Connection to Plug-in Manifold
M2	Manual Override at Conduit End Only - 4000 Series Only
M4	Manual Override Opposite Conduit End Only - 4000 Series Only
M5	Remote Pilot Supply to Conduit Vacuum and Low Pressure Service

Note: Shaded options have been discontinued. Refer to back of Catalog for Cross Reference Information.

Tel: +45 63 12 83 00 | Email: ps@hymatik.com | www.hymatik.com | Hvidkaervej 27a, DK-5250 Odense SV, Denmark

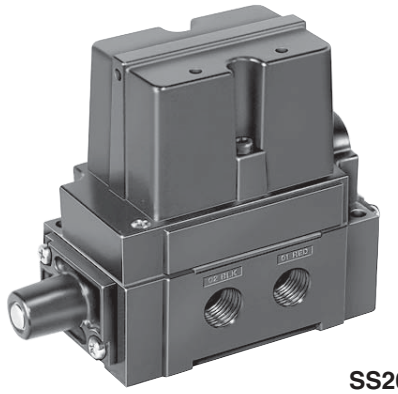

SS2010

Application

This inline mounted valve is used to operate a double acting cylinder. It is a 4-Way, 2-Position, 5-Ported, single solenoid pilot operated, maintained contact, air and spring return, and can be serviced without disturbing piping or wiring. Recessed non-locking manual override is standard, locking overrides available. They also may be used for 2-Way, 3-Way, and dual pressure service.

Operation

Single Pressure At Inlet Port "P":
Solenoid de-energized (at rest). Inlet pressure port "P", connected to outlet cylinder port, "02-BLK". Outlet cylinder port "01-RED" connected to exhaust port "RED".

Solenoid energized (actuated). Inlet pressure port "P", connected to outlet cylinder port "01-RED". Outlet cylinder port "02-BLK" connected to exhaust port "BLK".

Dual Pressure At Ports "RED" And "BLK":
May be used for dual pressure with pressure at ports "RED" and "BLK" with higher pressure at "RED" port. Exhaust at "P" port. (See maintenance bulletin for conversion instruction.)

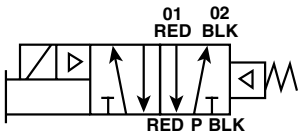

Model Selection Chart

For single pressure applications with internal pilot supply, 120V/60Hz.

Port Size	Valve/Inline Mounted	Model Number
3/8" NPT	Side Ported	**SS20103701**
1/2" NPT	Side Ported	**SS20105001**

Port Size	Valve/Add-A-Fold Base	Model Number
	Valve Assembly, Less Base	**SSA20123701**

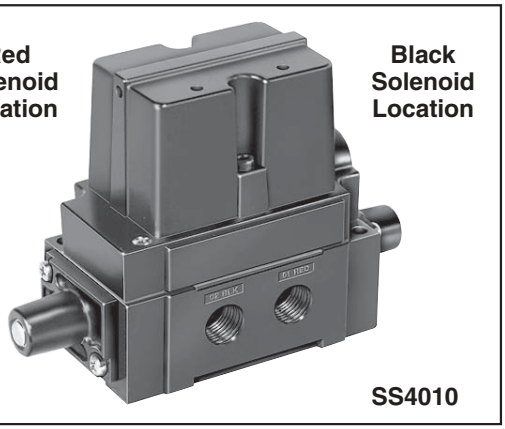

SS4010

Application

This inline mounted valve is used to operate a double acting cylinder. It is a 4-Way, 2-Position, 5-Ported, double solenoid pilot operated, momentary contact, with detents, and can be serviced without disturbing piping or wiring. Recessed non-locking manual override is standard, locking overrides available. They also may be used for 2-Way, 3-Way, and dual pressure service.

Operation

Single Pressure At Inlet Port "P":
Black solenoid last energized. Inlet pressure port "P", connected to outlet cylinder port, "02-BLK". Outlet cylinder port "01-RED" connected to exhaust port "RED".

Red solenoid last energized. Inlet pressure port "P", connected to outlet cylinder port "01-RED". Outlet cylinder port "02-BLK" connected to exhaust port "BLK".

Dual Pressure At Ports "RED" And "BLK":
May be used for dual pressure with pressure at ports "RED" and "BLK" with higher pressure at "RED" port. Exhaust at "P" port. (See maintenance bulletin for conversion instruction.)

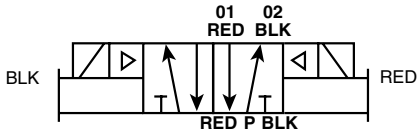

Model Selection Chart

For single pressure applications with internal pilot supply, 120V/60Hz.

Port Size	Valve/Inline Mounted	Model Number
3/8" NPT	Side Ported	**SS40103701**
1/2" NPT	Side Ported	**SS40105001**

Port Size	Valve/Add-A-Fold Base	Model Number
	Valve Assembly, Less Base	**SSA40123701**

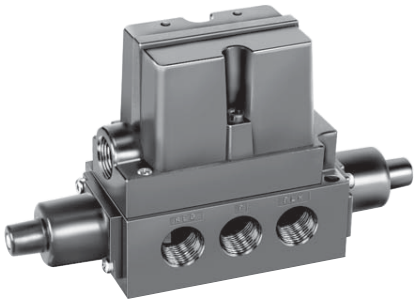

SS5010 / SS6010

Application

This inline mounted valve is used to operate a double acting cylinder. It is a 4-Way, 3-Position, 5-Ported, double solenoid pilot operated, maintained contact, spring centered, and can be serviced without disturbing piping or wiring. Recessed non-locking manual override is standard, locking overrides available. They also may be used for 2-Way, 3-Way, and dual pressure service.

Operation

SS5000 Series: All ports blocked in center position.

SS6000 Series: Pressure port "P" blocked in center position. Cylinder ports "01-RED" and "02-BLK" open to exhaust ports "RED" and "BLK".

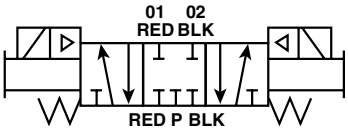

SS5000 Series

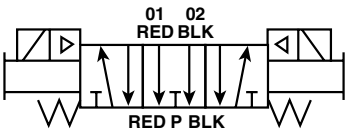

SS6000 Series

Model Selection Chart – SS5000 Series

For single pressure applications with internal pilot supply, 120V/60Hz.

Port Size	Valve/Inline Mounted	Model Number
3/8" NPT	Side Ported	**SS50103701**
1/2" NPT	Side Ported	**SS50105001**

Port Size	Valve/Add-A-Fold Base	Model Number
	Valve Assembly, Less Base	**SSA50123701**

Model Selection Chart – SS6000 Series

For single pressure applications with internal pilot supply, 120V/60Hz.

Port Size	Valve/Inline Mounted	Model Number
3/8" NPT	Side Ported	**SS60103701**
1/2" NPT	Side Ported	**SS60105001**

Tel: +45 63 12 83 00 | Email: ps@hymatik.com | www.hymatik.com | Hvidkaervej 27a, DK-5250 Odense SV, Denmark



SS1210

Application

This inline mounted valve is used to operate a double acting cylinder. It is a 4-Way, 2-Position, 5-Ported, single remote air operated, maintained signal air and spring return, and can be serviced without disturbing piping or wiring. Recessed non-locking manual override is standard, locking overrides available. They also may be used for 2-Way, 3-Way, and dual pressure service.

Operation

Single Pressure At Inlet Port "P":
Remote pressure to port "X1" must be equal to or greaterthan pressure at supply port. At rest, inlet pressure port "P", connected to outlet cylinder port, "02-BLK". Outlet cylinder port "01-RED" connected to exhaust port "RED".

When remote pressure is applied to port "X1" (actuated), inlet pressure port "P" connected to outlet cylinder port "01-RED". Outlet cylinder port "02-BLK" connected to exhaust port "BLK".

Dual Pressure At Ports "RED" And "BLK":
May be used for dual pressure with pressure at ports "RED" and "BLK" with higher pressure at "RED" port. Exhaust at "P" port. (See maintenance bulletin for conversion instruction.)



Model Selection Chart

For single pressure application.

Port Size	Valve/Inline Mounted	Model Number
1/4" NPT	Side Ported	**SS121025**
3/8" NPT	Side Ported	**SS121037**
1/2" NPT	Side Ported	**SS121050**

Port Size	Valve/Add-A-Fold Base	Model Number
	Valve Assembly, Less Base	**SSA121237**
3/8" End Ports	Valve W/Add-A-Fold, 2-End Ports, Common Exhaust	**SSX121237**
3/8" End Ports	Valve W/Add-A-Fold, 4-End Ports, Separate Exhaust	**SSW121237**

SS1410

Application

This inline mounted valve is used to operate a double acting cylinder. It is a 4-Way, 2-Position, 5-Ported, double air pilot operated, momentary signal, with detents and can be serviced without disturbing piping or wiring. Recessed non-locking manual override is standard, locking overrides available. They also may be used for 2-Way, 3-Way, dual pressure service.

Operation

Single Pressure At Inlet Port "P":
Remote pressure at "X2" port, inlet pressure port "P", connected to outlet cylinder port, "02-BLK". Outlet cylinder "01-RED" connected to exhaust port "RED".

Remote pressure at "X1" port, inlet pressure port "P", connected to outlet cylinder port "RED". Outlet cylinder port "02-BLK" connected to exhaust port "BLK".

Dual Pressure At Ports "RED" And "BLK":
May be used for dual pressure with pressure at ports "RED" and "BLK" with higher pressure at "RED" port. Exhaust at "P" port. (See maintenance bulletin for conversion instruction.)

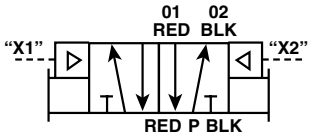

Model Selection Chart

For single pressure application.

Port Size	Valve/Inline Mounted	Model Number
1/4" NPT	Side Ported	**SS141025**
3/8" NPT	Side Ported	**SS141037**
1/2" NPT	Side Ported	**SS141050**

Port Size	Valve/Add-A-Fold Base	Model Number
	Valve Assembly, Less Base	**SSA141237**
3/8" End Ports	Valve W/Add-A-Fold, 2-End Ports, Common Exhaust	**SSX141237**
3/8" End Ports	Valve W/Add-A-Fold, 4-End Ports, Separate Exhaust	**SSW141237**

DISCONTINUED
11/30/2003

Parker Pneumatic

Parker Hannifin Corporation
Pneumatic Division North America
Richland, Michigan
www.parker.com/pneumatic

hymatik
Index
Tel: +45 63 12 83 00 | Email: ps@hymatik.com | www.hymatik.com | Hvidkaervej 27a, DK-5250 Odense SV, Denmark

SS1200 / SS1400
Single & Double Air Operated Valves

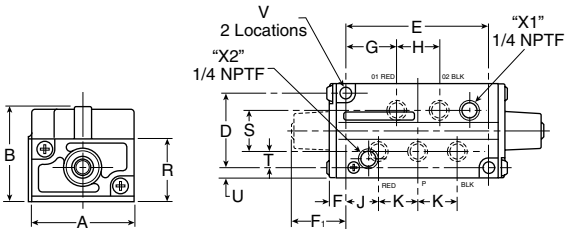

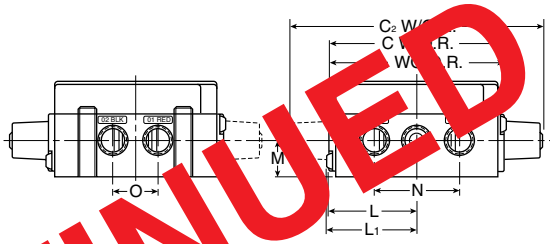

DISCONTINUED
11/30/2003

Dimensions:

	inches	mm
A	2.66	65
B	2.75	68
C	5.80	147
C_1	4.96	126
C_2	6.68	170
D	2.00	51
E	3.88	98
F	.53	13
F_1	1.39	35
G*	1.35	34
H*	1.19	30
J*	.88	22
K*	1.06	27
L	2.47	63

	inches	mm
L_1	2.55	65
M	.91	23
N 1/4"	2.00	51
N 3/8"	2.13	54
N 1/2"	2.25	57
O 1/4"	1.06	27
O 3/8"	1.19	30
O 1/2"	1.31	33
R	1.69	43
S	1.19	30
T	.41	10
U	.25	6
V	.28	7

* Dimensions are for valves with bottom ports (SSA).

Parker Hannifin Corporation
Pneumatic Division North America
Richland, Michigan
www.parker.com/pneumatic

Tel: +45 63 12 83 00 | Email: ps@hymatik.com | www.hymatik.com | Hvidkaervej 27a, DK-5250 Odense SV, Denmark

Application

The Parker SA Add-A-Fold system permits assembly of many valves and their Add-A-Fold bases into one manifold system. Each Add-A-Fold assembly requires only one supply connection. Supply and exhaust connections are made by bolting the desired valve to its Add-A-Fold base section. Outlet connections are made to each Add-A-Fold station.

Electrical connections are made to separate valves through a common junction box at one end of the manifold.

Each Add-A-Fold base will accept any SSA Series Valve and gasket:

- Single Solenoid
- Double Solenoid
- Single Air Operated
- Double Air Operated

Features

- Greatly reduces installation costs.
- Reduces piping, wiring and risk of leaks.
- Saves space.
- Creates custom valving arrangements with standard components.
- Improves appearance of pneumatic machines.
- Built-in electrical junction box.

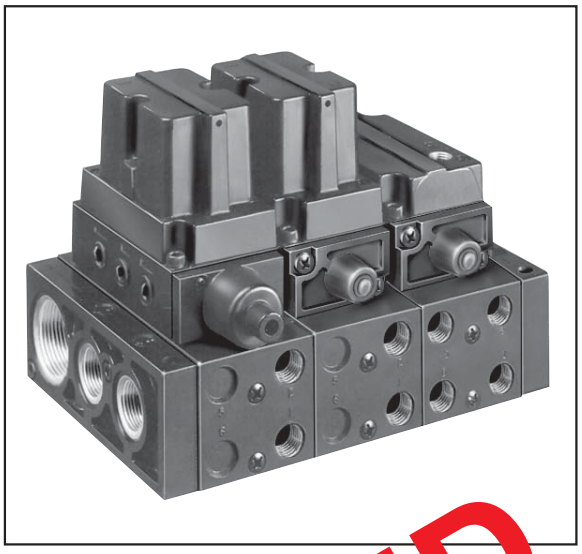

Note: When valves are ordered separately on manifold bases, all necessary assembly and interface hardware is included. Side plate kits must be ordered separately.

Add-A-Fold Side Plate Kit

Each Add-A-Fold Side Plate Kit contains a right and left side plate, (3) o-ring seals, (2) socket head cap screws, (2) lockwashers, and (2) couplings.

PL3509C Side Plate Kit
(2) Side plates, (3) O-rings, Cap screws, couplings & washers

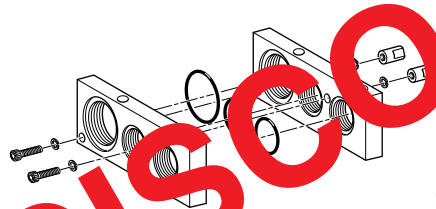

Conversion Kit PL3380

To convert SA 1110 common exhaust base to separate exhaust SA1140 base.

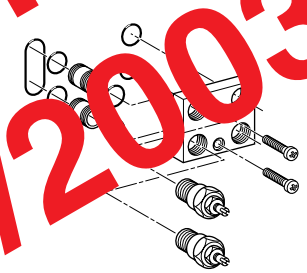

Add-A-Fold Base Kit

Each Add-A-Fold Base Kit contains a manifold base, (3) base to base o-rings, (2) base connecting tie rods.

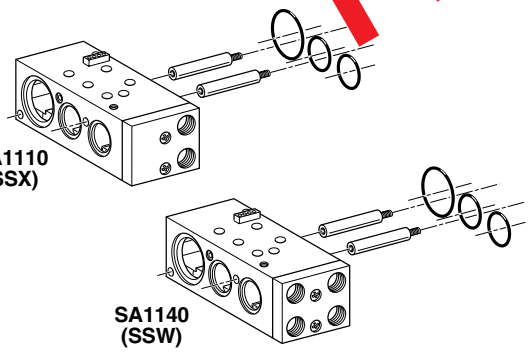

PL3539B Intermediate Plate Kit

(1) Side plate
(3) O-rings
(2) Long tie rods
(cad plated)

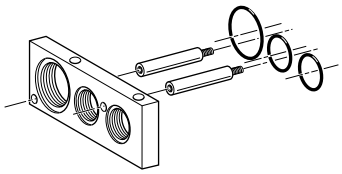

Required for manifold consisting of six (6) or more valves.

DISCONTINUED
11/30/2003

Both the SA1110 and SA1140 Add-A-Fold bases are available with bottom porting on the pressure port, enabling you to bring separate pressures into individual stations. This is accomplished by regulating pressure into the isolated base.

This feature now enables the SS Manifold to be worked at individual pressures.

Ordering Information For All SSA Series Valves	
	Example
1/4" Bottom ported regulated pressure with common exhaust (SA1150)	**SSX20113701**
1/4" Bottom ported regulated pressure with separate exhaust (SA1160)	**SSW20113701**
SA1150 base, same as SA1110 except 1/4" pressure port in bottom of base.	
SA1160 base, same as SA1140 except 1/4" pressure port in bottom of base.	
PS5403—Isolator Plate.	

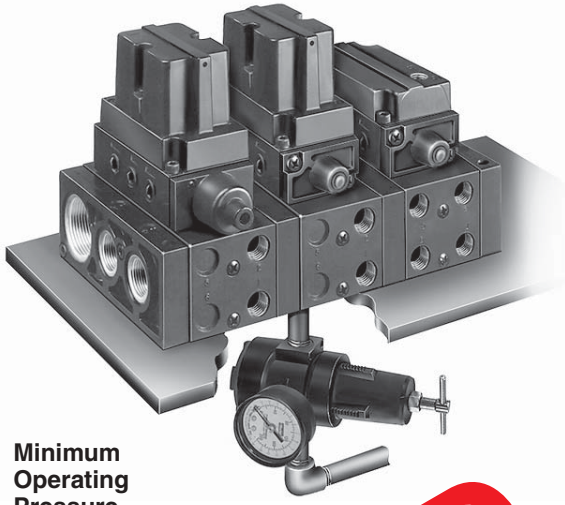

Minimum Operating Pressure 25 PSIG

DISCONTINUED
11/30/2003

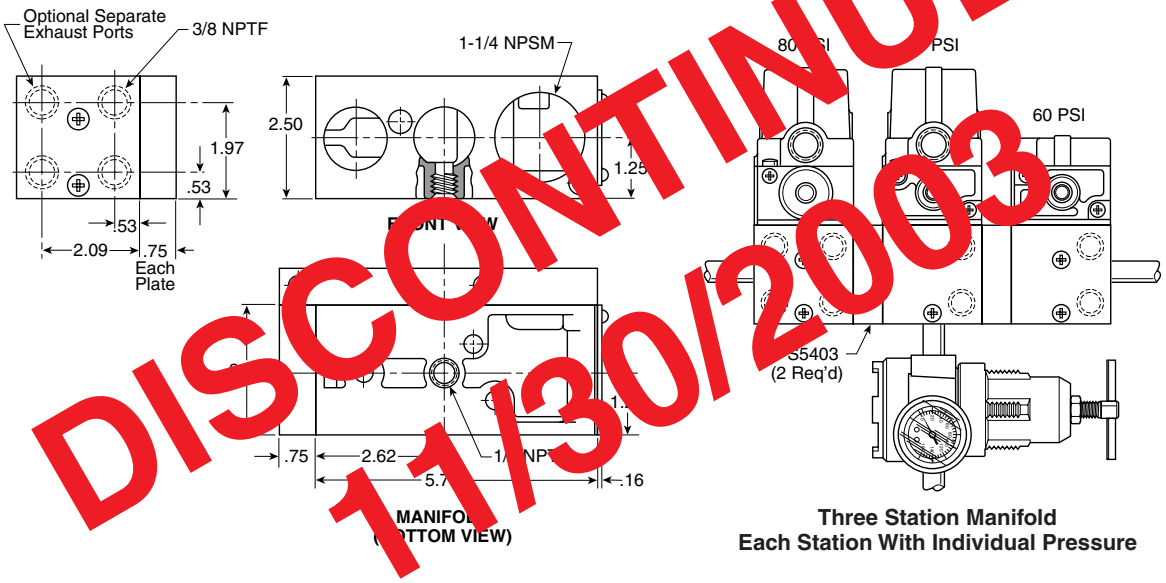

Three Station Manifold Each Station With Individual Pressure

SS Series Override Conversion Kits

Convert valves without overrides or change style of overrides with the kits below.

Series SS1200, 1400, 2000, 4000

PL5167B Non-locking manual override

PL5168B Locking manual override

PL5153B Non-locking manual override, knob type

PL5155B Locking manual override, knob type

Series SS1500, 1600, 5000, 6000

PL5185 Locking manual override

PL5178 Non-locking manual override

Parker Hannifin Corporation
Pneumatic Division North America
Richland, Michigan
www.parker.com/pneumatic

Tel: +45 63 12 83 00 | Email: ps@hymatik.com | www.hymatik.com | Hvidkaervej 27a, DK-5250 Odense SV, Denmark

Operating Pressure

2-Position Single & Double Solenoid Valves:

20 to 150 PSIG (138 to 1035 kPa). Can be modified for use on low pressure or vacuum operation for inline valves only.

3-Position Double Solenoid Valves:

35 to 150 PSIG (242 to 1035 kPa). Can be modified for use on low pressure or vacuum operation for inline valves only.

Temperature

Ambient	Minimum	Maximum
Continuous Duty	0°F (-18°C)	140°F +60°C).
Intermittent Duty	0°F (-18°C)	140°F +60°C).

Electrical Data: 120V/60Hz - 110V/50Hz

7.2 Watts	.26 Amp Inrush	.14 Amp Holding

Class B (130°C) Coil.

Lubrication

For maximum service life use clean, lubricated air. F442P oil is specially formulated to promote maximum valve life.

2-Position Single Solenoid

Average Fill Time: (Seconds)*

Valve Port Size	12 Cu. In. Test Chamber		100 Cu. In. Test Chamber	
	Fill	Exhaust	Fill	Exhaust
3/8"	.064	.092	.024	.427
1/2"	.049	.045	.185	.345

* With 100 PSI supply, time required to fill from 0-90 PSI and exhaust from 100 PSI to 10 PSI is measured from instant of energizing, or de-energizing 120V/60Hz solenoid. Times shown are average.

2-Position Double Solenoid

Average Fill Time: (Seconds)*

Valve Port Size	12 Cu. In. Test Chamber		100 Cu. In. Test Chamber	
	Fill	Exhaust	Fill	Exhaust
3/8"	.049	.091	.233	.437
1/2"	.026	.052	.172	.307

* With 100 PSI supply, time required to fill from 0-90 PSI and exhaust from 100 PSI to 10 PSI is measured from instant of energizing, or de-energizing 120V/60Hz solenoid. Times shown are average.

3-Position Double Solenoid

Average Fill Time: (Seconds)*

Valve Port Size	12 Cu. In. Test Chamber		100 Cu. In. Test Chamber	
	Fill	Exhaust	Fill	Exhaust
3/8"	.051	.089	.247	.428
1/2"	.038	.058	.176	.322

* With 100 PSI supply, time required to fill from 0-90 PSI and exhaust from 100 PSI to 10 PSI is measured from instant of energizing, or de-energizing 120V/60Hz solenoid. Times shown are average.

Coil Selection

Voltage Range +10/-15% of Nominal

Class B	60Hz.	50Hz.	DC
01	120VAC	110VAC	—
22	—	—	24VDC

Flow Rating (C_V)

Flow Path	Valve Port Size			
	2-Position		3-Position	
	3/8"	1/2"	3/8"	1/2"
P⟶02-BLK	1.9	2.2	1.7	2.2
P⟶01-RED	1.7	2.1	1.6	2.1
02-BLK⟶BLK	1.6	1.9	1.6	1.9
01-RED⟶RED	1.4	2.2	1.4	2.0
Avg.	1.7	2.1	1.6	2.0

Parker Pneumatic

Parker Hannifin Corporation
Pneumatic Division North America
Richland, Michigan
www.parker.com/pneumatic

Tel: +45 63 12 83 00 | Email: ps@hymatik.com | www.hymatik.com | Hvidkaervej 27a, DK-5250 Odense SV, Denmark

SS2000/SS4000
Single & Double Solenoid Valves

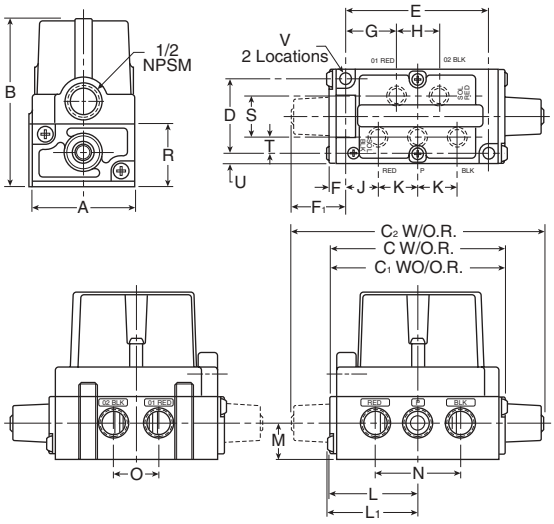

SS5000/SS6000
Double Solenoid Valve

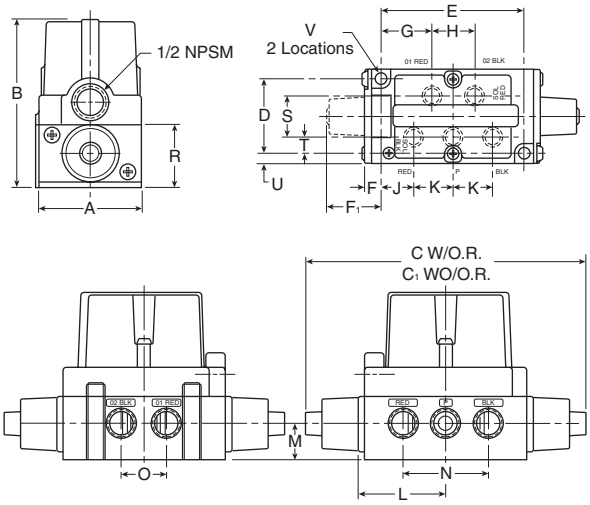

Dimensions:

	inches	mm
A	2.56	65
B	4.63	118
C	5.80	147
C_1	4.96	126
C_2	6.69	170
D	2.00	51
E	3.88	98
F	.53	13
F_1	1.39	35
G*	1.35	34
H*	1.19	30
J*	.88	22
K*	1.06	27
L	2.47	63

	inches	mm
L_1	2.55	65
M	.91	23
N 1/4"	2.00	51
N 3/8"	2.13	54
N 1/2"	2.25	57
O 1/4"	1.06	27
O 3/8"	1.19	30
O 1/2"	1.31	33
R	1.69	43
S	1.19	30
T	.41	10
U	.25	6
V	.28	7

***** Dimensions are for valves with bottom ports (SSA).

Dimensions:

	inches	mm
A	2.56	65
B	4.63	118
C	8.20	208
C_1	8.20	208
D	2.00	51
E	3.88	98
F	2.16	55
G*	1.35	34
H*	1.19	30
J*	.88	22
K*	1.06	27
L	2.55	65

	inches	mm
M	.91	23
N 1/4"	2.00	51
N 3/8"	2.13	54
N 1/2"	2.25	57
O 1/4"	1.06	27
O 3/8"	1.19	30
O 1/2"	1.31	33
R	1.69	43
S	1.19	30
T	.41	10
U	.25	6
V	.28	7

***** Dimensions are for valves with bottom ports (SSA).

Tel: +45 63 12 83 00 | Email: ps@hymatik.com | www.hymatik.com | Hvidkaervej 27a, DK-5250 Odense SV, Denmark

Service Kits and Parts Available

Valve Body Service Kit:	
(consists of items # 3, 7, 8, 9, 11, & 12)	PS5396
Manual Override Kits:	
Flush Style - Non-Locking Type	PL5178
Flush Style - Locking Type	PL5185

Part Identification List

V-250D

Item #	Description
1	External Pilot Cover
2	Screw - body/cover
3	Molded Gasket - valve body to cover
4	Valve Body Assembly
5	Valve Body
6	End Cap
7	Return Spring
8	Seal - cover
9	Lipseal
10	Sleeve
11	Stem
12	O-ring - sleeve
13	Piston
14	Washer
15	Screw - valve body to end cap (not shown)

Flush Style Manual Overrides

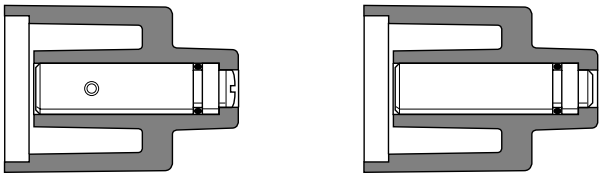

Locking Type **Non-Locking Type**

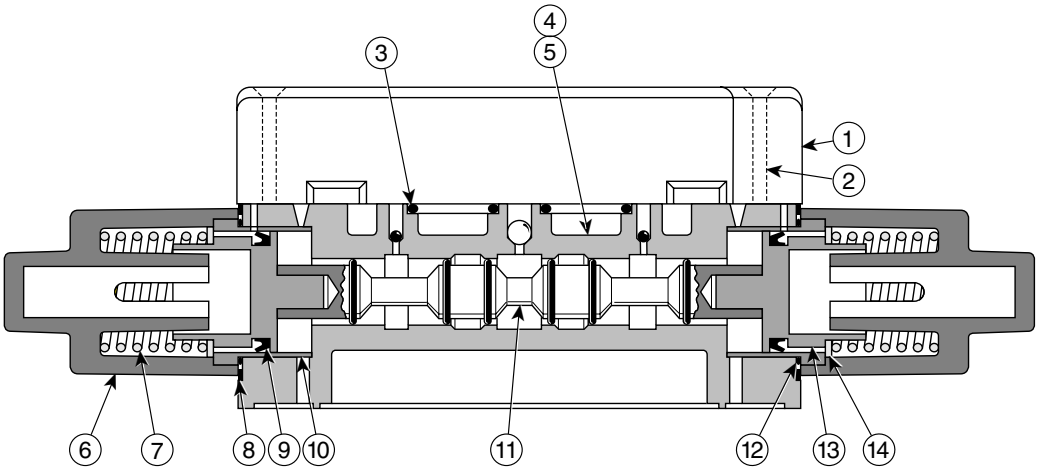

Parker Hannifin Corporation
Pneumatic Division North America
Richland, Michigan
www.parker.com/pneumatic

Tel: +45 63 12 83 00 | Email: ps@hymatik.com | www.hymatik.com | Hvidkaervej 27a, DK-5250 Odense SV, Denmark

Field Conversion from Dual Exhaust to Dual Pressure

Remove the external pilot cover from the base. Determine which port will receive the highest pressure, and then remove the ball directly above that port. Reposition the rubber ball into the center "P" port.

⚠ **CAUTION:**

Before attaching the external pilot cover, make sure that the molded gasket is positioned properly in its gasket track.

Service Kits and Parts Available

SS1200 Series Valve Body Service Kit:
(consists of items # 2, 3, 5, 8, 9, 11, & 12) PS5394

SS1400 Series Valve Body Service Kit:
(consists of items # 3, 5, 8, 9, 11, 12, 16, & 17) PS5395

Manual Override Kits:
Flush Style - Non-Locking PL5167B
Flush Style - Locking PL5168B

Part Identification List

V-251D

Item #	Description
1	Valve Body
2	Return Spring
3	Stem Assembly
4	Piston
5	Lip Seal
6	Mounting Screws - end cap to valve body
7	End Cap Assembly with override
8	Seal for end cap
9	Molded Gasket for valve body to cover
10	Plug - 3/16" Dia. Rubber Ball
11	Polyurethane Check Ball - 1/8" Dia.
12	Wire Clip
13	External Pilot Cover
14	Mounting Screw - cover to valve body
15	End Cap - return spring end
16	Detent Wire
17	Rubber Ball
18	Non-Locking Override
19	Locking Override

Flush Style Manual Override

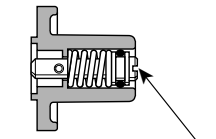

Locking type has a slot; Non-locking type is without slot.

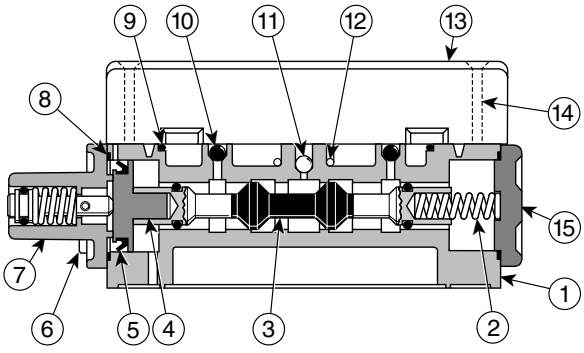

SS1200

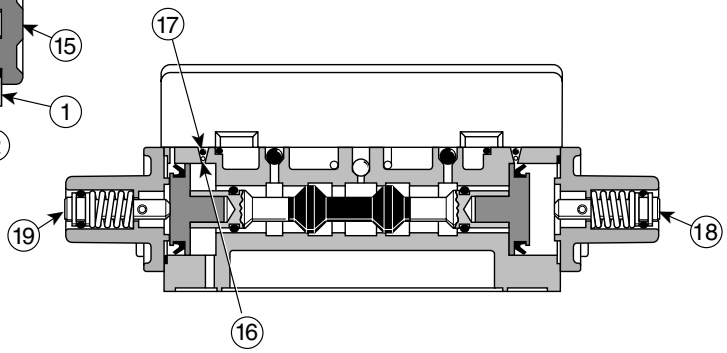

Parker Hannifin Corporation
Pneumatic Division North America
Richland, Michigan
www.parker.com/pneumatic

Tel: +45 63 12 83 00 | Email: ps@hymatik.com | www.hymatik.com | Hvidkaervej 27a, DK-5250 Odense SV, Denmark

Field Conversion from Dual Exhaust to Dual Pressure

Valve operation (& model number) is determined by the location of the 1/8" dia. polyurethane check ball and the two 3/16" dia. rubber plugs. Remove the conduit adapter from the base. Determine which port will receive the highest pressure, and then remove the rubber plug directly above that port and replace it with the polyurethane check ball. Reposition the rubber plug into the center "P" port.

⚠ **CAUTION:** Before attaching the conduit adapter, make sure that the molded gasket is positioned properly in its gasket track.

Service Kits and Parts Available

Valve Body Service Kit:
(consists of items # 21, 22, 25, 26, 27, 28, & 31) PS5394

Solenoid Service Kit:
(consists of items # 5, 6, 7, 8, 10, 12, 13, & 14) PS5397

Manual Override Kits:
Flush Style - Non-Locking PL5167B
Flush Style - Locking PL5168B

Part Identification List

V-253C

Item #	Description
1	Solenoid Assembly
2	Solenoid Cover with captive mounting screws
3	Solenoid Coil
4	Flux Sleeve
5	Compression Gasket
6	Top Seat
7	Small O-ring for top seat
8	Large O-ring for top seat
9	Solenoid Plunger
10	O-ring for coil
11	Flux Plate
12	O-ring for flux plate
13	Seal for solenoid cover to conduit adapter
14	Spring for plunger
15	Conduit Adapter Assembly
16	Conduit Body
17	Leads
18	Mounting Screws (#10-24x1) - conduit body to valve body (not shown)
19	Valve Body Assembly
20	Valve Body
21	Molded Gasket for valve body to conduit body
22	Seal for end cap
23	End Cap - return spring end
24	End Cap Assembly with override - piston end
25	Return Spring
26	Wire Clip
27	Polyurethane Check Ball - 1/8" Dia.
28	Stem Assembly
29	Plug - 3/16" Dia. Rubber Ball
30	Piston
31	Lip Seal
32	Mounting Screws - end cap to valve body

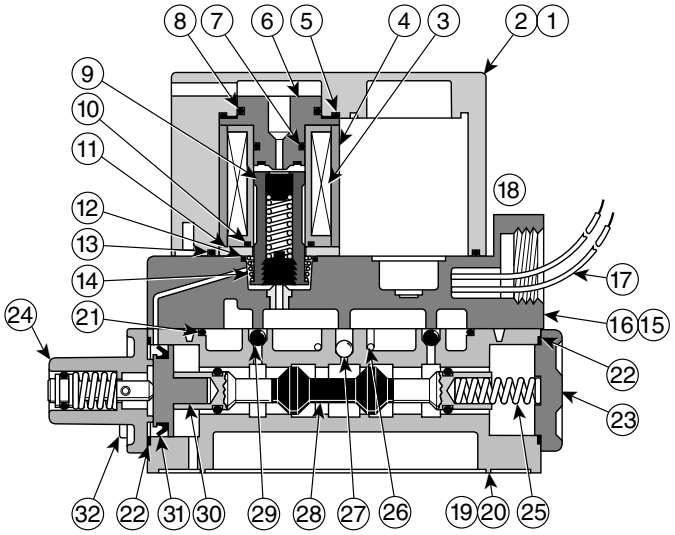

Flush Style Manual Override

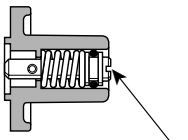

Locking type has a slot;
Non-locking type is without slot.

Parker Hannifin Corporation
Pneumatic Division North America
Richland, Michigan
www.parker.com/pneumatic

Tel: +45 63 12 83 00 | Email: ps@hymatik.com | www.hymatik.com | Hvidkaervej 27a, DK-5250 Odense SV, Denmark

Field Conversion from Dual Exhaust to Dual Pressure

Valve operation (& model number) is determined by the location of the 1/8" dia. polyurethane check ball and the two 3/16" dia. rubber plugs. Remove the conduit adapter from the base. Determine which port will receive the highest pressure, and then remove the rubber plug directly above that port and replace it with the polyurethane check ball. Reposition the rubber plug into the center "P" port.

⚠ **CAUTION:** Before attaching the conduit adapter, make sure that the molded gasket is positioned properly in its gasket track.

Service Kits and Parts Available

Valve Body Service Kit:
(consists of items # 21, 22, 25, 26, 27, 30, 32, & 33) PS5395

Solenoid Service Kit:
(consists of items # 5, 6, 7, 8, 9, 10, 12, 13, & 14) PS5397

Note: Two kits are required to service a double solenoid valve.

Manual Override Kits:
Flush Style - Non-Locking PL5167B
Flush Style - Locking PL5168B

Part Identification List

V-255D

Item #	Description
1	Solenoid Assembly
2	Solenoid Cover with captive mounting screws
3	Solenoid Coil
4	Flux Sleeve
5	Compression Gasket
6	Top Seat
7	Small O-ring for top seat
8	Large O-ring for top seat
9	Solenoid Plunger
10	O-ring for coil
11	Flux Plate
12	O-ring for flux plate
13	Seal for solenoid cover to conduit adapter
14	Spring for plunger
15	Conduit Adapter Assembly
16	Conduit Body
17	Leads
18	Mounting Screws (#10-24x1) - conduit body to valve body (not shown)
19	Valve Body Assembly
20	Valve Body
21	Molded Gasket for valve body to conduit body
22	Seal for end cap
23	Locking Override
24	End Cap Assembly with non-locking override
25	Wire Clip
26	Polyurethane Check Ball - 1/8" Dia.
27	Stem Assembly
28	Plug - 3/16" Dia. Rubber Ball
29	Piston
30	Lip Seal
31	Mounting Screws - end cap to valve body
32	Detent Wire
33	Rubber Ball

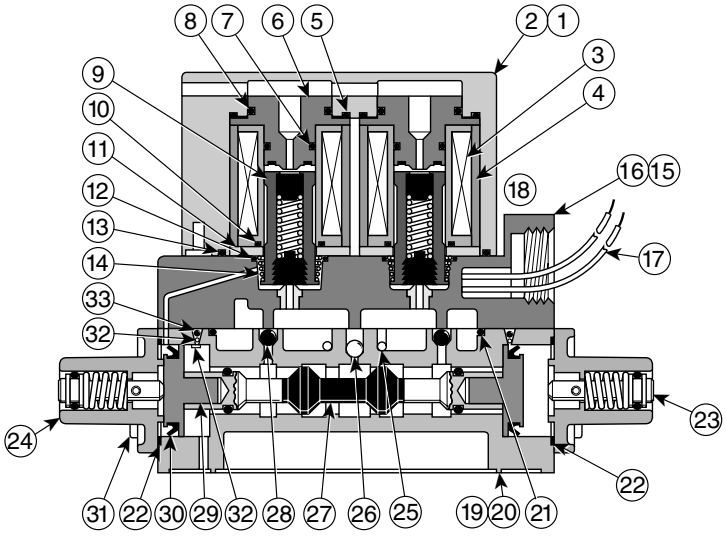

Flush Style Manual Override

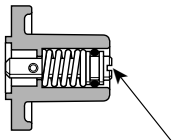

Locking type has a slot;
Non-locking type is without slot.

hymatik
Index
Tel: +45 63 12 83 00 | Email: ps@hymatik.com | www.hymatik.com | Hvidkaervej 27a, DK-5250 Odense SV, Denmark

Service Kits Available

Valve Body Service Kit:
(consists of items #
21, 23, 24, 25, 27, 28, 29, & 31) PS5396

Solenoid Service Kit:
(consists of items #
5, 6, 7, 8, 9, 10, 12, 13, & 14) PS5397

Note: Two kits are required to service a double solenoid valve.

Manual Override Kits:
Flush Style - Non-Locking PL5178
Flush Style - Locking PL5185

Parts Identification List

V-256CP

Item #	Description
1	Solenoid Assembly
2	Solenoid Cover with captive mounting screws
3	Solenoid Coil
4	Flux Sleeve
5	Compression Gasket
6	Top Seat
7	Small O-ring for top seat
8	Large O-ring for top seat
9	Solenoid Plunger Assembly
10	O-ring for coil
11	Flux Plate
12	O-ring for flux plate
13	Seal for solenoid cover to conduit adapter
14	Spring for plunger assembly
15	Conduit Adapter Assembly
16	Conduit Body
17	Electrical Leads
18	Mounting Screws (#10-24x1) - conduit body to valve body (not shown)
19	Valve Body & End Cap Assemblies
20	Valve Body
21	Molded Gasket for valve body to conduit body
22	End Cover
23	Return Spring
24	Seal for end cap to body
25	Lip Seal
26	Sleeve
27	Wire Clip
28	Polyurethane Check Ball - 1/8" Diameter
29	Stem Assembly
30	Plug - 3/16" Diameter Rubber Ball
31	O-ring - sleeve to body
32	Piston
33	Washer
34	Mounting Screws - end cap to valve body (not shown)

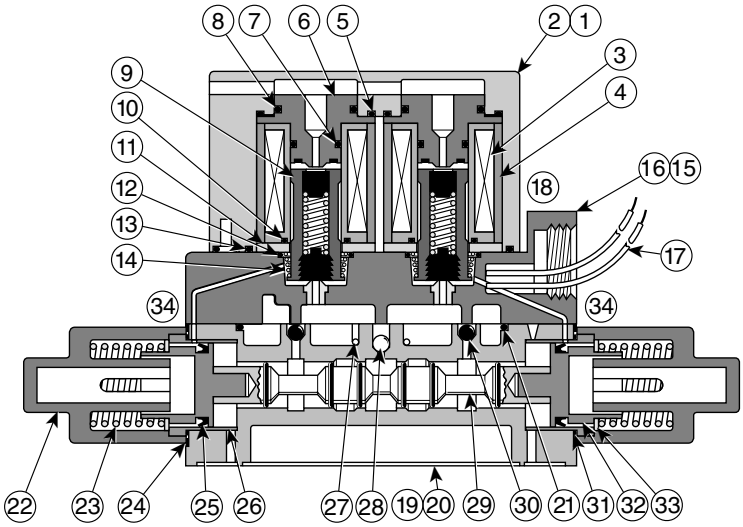

Figure 1: SS Valve Assembly

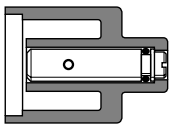

Figure 2: Flush Style Manual Override; Locking

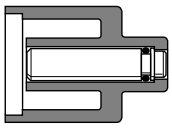

Figure 3: Flush Style Manual Override; Non-Locking

Parker Pneumatic

Parker Hannifin Corporation
Pneumatic Division North America
Richland, Michigan
www.parker.com/pneumatic

Tel: +45 63 12 83 00 | Email: ps@hymatik.com | www.hymatik.com | Hvidkaervej 27a, DK-5250 Odense SV, Denmark

Cross Reference

Obsolete SS Valve	Suggested Replacement	Notes	Alternate SS Valve	Notes
SS120037	F5F15000XXA			
SS120050	B7F3000XXA			
SS121025	F5F13000XXA			
SS121037	F5F15000XXA			
SS121050	B7F3000XXA			
SS122050	B7F3000XXA			
SS140025	F5413000XXA			
SS140037	F5415000XXA			
SS140050	B743000XXA			
SS140237	F5465000XXA	3		
SS141025	F5413000XXA			
SS141037	F5415000XXA			
SS141050	B743000XXA			
SS147025	F5413000XXA			
SS151025	F5813000XXA			
SS151037	F5815000XXA			
SS151050	B783000XXA			
SS161025	F5913000XXA			
SS161050	B793000XXA			
SS20002501	F5E13BGA23A		SS20103701 & Bush to 1/4"	12
SS20002522	F5E13BGA19A		SS20103722 & Bush to 1/4"	12
SS20003701	F5E15BGA23A		SS20103701	12
SS20003701M5	F5E15LGA23A			
SS20003720	F5E15BGA12A			
SS20003722	F5E15BGA19A		SS20103722	12
SS20005001	B7E3ADH53A		SS20105001	12
SS20005001SP1	NO CROSS	7		
SS20005021	B7E3ADH45A			
SS20005022	B7E3ADH49A		SS20105022	12
SS20023701	F5E65BGA23A	3	SS20123701	
SS20023702	F5E65BGA87A	3		
SS20102501	F5E13BGA23A		SS20103701 & Bush to 1/4"	
SS20102501M5	F5E13LGA23A			
SS20102502	F5E13BGA87A			
SS20102520	F5E13BGA12A			
SS20102522	F5E13BGA19A		SS20103722 & Bush to 1/4"	

Notes

1. This SS valve is modified for dual pressure application with highest pressure at the "Red" port. The F5 valve requires External Pilot and connect the high pressure to the #5 Port.
2. This SS valve is modified for dual pressure application with highest pressures at the "Black" port. The F5 valve requires External Pilot and connect the highest pressure to the #3 port.
3. This valve is attached to a Manifold Assembly. No direct replacement is available. Review application of valve configuration. Recommended F5 valve listed includes Manifold Base.
4. The M1 Modification was a Special External Pilot Drilling to the body for attaching the valve to a Manifold made by the BW Rogers Company for Firestone and Goodyear tire manufacturing industry. Review of application required for suitable replacement.
5. The M2 Modification was Non-Locking Manual Override on the Conduit End of valve only. SS4000 Series. The F5 or SS valve selected had Non-Locking Manual Overrides on both ends of the valve.
6. The M4 Modification was Non-Locking Manual Override opposite the Conduit End of the valve. SS4000 Series. The F5 or SS valve selected has Non-Locking Manual Overrides on both ends of the valve.
7. Use Repair Kits to Service Valve.
8. Field convert SS valve to Dual Pressure.
9. Selected SS valve has 18" Leads instead of 72" Leads.
10. Selected SS valve has Flush Type Non-Locking Manual Override instead of Knob Type Non-Locking Manual Override.
11. Selected SS valve has Flush Type Locking Manual Override instead of Knob Type Locking Manual Override.
12. Selected SS valve has Flush Type Non-Locking Manual Override instead of No Override.
13. Selected SS valve has No Indicator Light.

Parker Hannifin Corporation
Pneumatic Division North America
Richland, Michigan
www.parker.com/pneumatic

Tel: +45 63 12 83 00 | Email: ps@hymatik.com | www.hymatik.com | Hvidkaervej 27a, DK-5250 Odense SV, Denmark

Cross Reference

Obsolete SS Valve	Suggested Replacement	Notes	Alternate SS Valve	Notes
SS20102523	NO CROSS VOLTAGE 125VDC	7		
S20103701M5	F5E15LGA23A			
S20103702	F5E15BGA87A			
SS20103723	NO CROSS VOLTAGE 125VDC	7		
SS20105002	B7E3ADH57A			
SS20105021	B7E3ADH45A			
SS20105023	NO CROSS VOLTAGE 125VDC	7		
SS20105058	NO CROSS VOLTAGE 250VDC	7		
SS20123701M1B		4		
SS20133701	F5E15LGA23A	1	SS20103701	8
SS20163701	F5E15LGA23A	2	SS20103701	8
SS20202501	F5E13BHA23A		SS20203701 & Bush to 1/4"	
SS20202502	F5E13BHA87A			
SS20203702	F5E15BHA87A			
SS20203720	F5E15BHA12A			
SS20205021	B7E3ACH45A			
SS20302501	F5E13BGB23A		SS20103701 & Bush to 1/4"	9
SS20303701	F5E15BGB23A		SS20103701	9
SS20303702	F5E15BGB87A			
SS20362515	NO CROSS VOLTAGE IS 48VDC	7		
SS20402501	F5E13BGB23A		SS20103701 & Bush to 1/4"	9
SS20402523	NO CROSS VOLTAGE 125VDC	7		
SS20402559	NO CROSS VOLTAGE 120/50 VAC	7		
SS20403701	F5E15BGB23A		SS20103701	9
SS20403723	NO CROSS VOLTAGE 125VDC	7		
SS20405001	B7E3ADR53A		SS20105001	9
SS20423722	F5E65BGB23A	3	SS20103722	9
SS20503702	F5E15BHB87A			
SS20505001	B7E3ACR53A		SS20205001	9
SS20603701	F5E15BJB23A		SS20103701	9, 10
SS20703701	F5E15BJA23A		SS20103701	10
SS20705001	B7E3ADH53A		SS20105001	10
SS20802501	F5E13AKA23A		SS20203701 & Bush to 1/4"	11
SS20802522	F5E13AKA19A		SS20203722 & Bush to 1/4"	11
SS20803701	F5E15AKA23A		SS20203701	11
SS20805001	B7E3ACH53A		SS20205001	11

Notes

1. This SS valve is modified for dual pressure application with highest pressure at the "Red" port. The F5 valve requires External Pilot and connect the high pressure to the #5 Port.
2. This SS valve is modified for dual pressure application with highest pressures at the "Black" port. The F5 valve requires External Pilot and connect the highest pressure to the #3 port.
3. This valve is attached to a Manifold Assembly. No direct replacement is available. Review application of valve configuration. Recommended F5 valve listed includes Manifold Base.
4. The M1 Modification was a Special External Pilot Drilling to the body for attaching the valve to a Manifold made by the BW Rogers Company for Firestone and Goodyear tire manufacturing industry. Review of application required for suitable replacement.
5. The M2 Modification was Non-Locking Manual Override on the Conduit End of valve only. SS4000 Series. The F5 or SS valve selected had Non-Locking Manual Overrides on both ends of the valve.
6. The M4 Modification was Non-Locking Manual Override opposite the Conduit End of the valve. SS4000 Series. The F5 or SS valve selected has Non-Locking Manual Overrides on both ends of the valve.
7. Use Repair Kits to Service Valve.
8. Field convert SS valve to Dual Pressure.
9. Selected SS valve has 18" Leads instead of 72" Leads.
10. Selected SS valve has Flush Type Non-Locking Manual Override instead of Knob Type Non-Locking Manual Override.
11. Selected SS valve has Flush Type Locking Manual Override instead of Knob Type Locking Manual Override.
12. Selected SS valve has Flush Type Non-Locking Manual Override instead of No Override.
13. Selected SS valve has No Indicator Light.

Tel: +45 63 12 83 00 | Email: ps@hymatik.com | www.hymatik.com | Hvidkaervej 27a, DK-5250 Odense SV, Denmark

Cross Reference

Obsolete SS Valve	Suggested Replacement	Notes	Alternate SS Valve	Notes
SS20805021	B7E3ACH45A			
SS20903701M5	F5E15LKB23A			
SS20905001	B7E3ACR53A		SS20205001	9, 11
SS40002501	F5213BGA23A		SS40103701 & Bush to 1/4"	12
SS40002502	F5213BGA87A			
SS40002522	F5213BGA19A		SS40103722 & Bush to 1/4"	12
SS40002523	NO CROSS VOLTAGE 125VDC	7		
SS40003701	F5215BGA23A		SS40103701	12
SS40003702	F5215BGA87A			
SS40003722	F5215BGA19A		SS40103722	12
SS40003723	NO CROSS VOLTAGE 125VDC	7		
SS40005001	B723ADH53A		SS40105001	12
SS40005023	NO CROSS VOLTAGE 125VDC	7		
SS40023701	F5265BGA23A	3	SS40123701	12
SS40023702	F5265BGA87A	3		
SS40102501	F5213BGA23A		SS40103701 & Bush to 1/4"	
SS40102501M2	F5215BGA23A	5	SS40103701 & Bush to 1/4"	5
SS40102501M5	F5213LGA23A			
SS40102502	F5213BGA87A			
SS40102521	F5213BGA15A			
SS40102522	F5213BGA19A		SS40103722 & Bush to 1/4"	
SS40102523	NO CROSS VOLTAGE 125VDC	7		
SS40102523M2	NO CROSS VOLTAGE 125VDC	7		
SS40103701M5	F5215LGA23A			
SS40103702	F5215BGA87A			
SS40103720	F5215BGA12A			
SS40103723	NO CROSS VOLTAGE 125VDC	7		
SS40105002	B723ADH57A			
SS40105023	NO CROSS VOLTAGE 125VDC	7		
SS40123701M1B		4		
SS40132501	F5213LGA23A	1	SS40103701 & Bush to 1/4"	8
SS40135001	B723KDH53A	1	SS40105001	8
SS40202501	F5213BHA23A			
SS40202523	NO CROSS VOLTAGE 125VDC	7		
SS40223701M1B		4		
SS40223722M1B		4		

Notes

1. This SS valve is modified for dual pressure application with highest pressure at the "Red" port. The F5 valve requires External Pilot and connect the high pressure to the #5 Port.
2. This SS valve is modified for dual pressure application with highest pressures at the "Black" port. The F5 valve requires External Pilot and connect the highest pressure to the #3 port.
3. This valve is attached to a Manifold Assembly. No direct replacement is available. Review application of valve configuration. Recommended F5 valve listed includes Manifold Base.
4. The M1 Modification was a Special External Pilot Drilling to the body for attaching the valve to a Manifold made by the BW Rogers Company for Firestone and Goodyear tire manufacturing industry. Review of application required for suitable replacement.
5. The M2 Modification was Non-Locking Manual Override on the Conduit End of valve only. SS4000 Series. The F5 or SS valve selected had Non-Locking Manual Overrides on both ends of the valve.
6. The M4 Modification was Non-Locking Manual Override opposite the Conduit End of the valve. SS4000 Series. The F5 or SS valve selected has Non-Locking Manual Overrides on both ends of the valve.
7. Use Repair Kits to Service Valve.
8. Field convert SS valve to Dual Pressure.
9. Selected SS valve has 18" Leads instead of 72" Leads.
10. Selected SS valve has Flush Type Non-Locking Manual Override instead of Knob Type Non-Locking Manual Override.
11. Selected SS valve has Flush Type Locking Manual Override instead of Knob Type Locking Manual Override.
12. Selected SS valve has Flush Type Non-Locking Manual Override instead of No Override.
13. Selected SS valve has No Indicator Light.

Tel: +45 63 12 83 00 | Email: ps@hymatik.com | www.hymatik.com | Hvidkaervej 27a, DK-5250 Odense SV, Denmark

Cross Reference

Obsolete SS Valve	Suggested Replacement	Notes	Alternate SS Valve	Notes
SS40302501	F5213BGB23A		SS40103701 & Bush to 1/4"	12
SS40302515	NO CROSS VOLTAGE IS 48VDC	7		
SS40302559	NO CROSS VOLTAGE IS 120V/50HZ	7		
SS40303701	F5215BGB23A		SS40103701	9, 12
SS40303758	NO CROSS VOLTAGE IS 250VDC	7		
SS40362515	NO CROSS VOLTAGE IS 48VDC	7		
SS40402501	F5213BGB23A		SS40103701 & Bush to 1/4"	9
SS40402501M2	F5213BGA23A	5	SS40103701 & Bush to 1/4"	5
SS40402501M4	F5213BGA23A	6	SS40103701 & Bush to 1/4"	6
SS40402522M4	F5213BGA19A	6	SS40103722 & Bush to 1/4"	6
SS40402523	NO CROSS VOLTAGE 125VDC	7		
SS40402523M2	NO CROSS VOLTAGE 125VDC	7		
SS40402523M4	NO CROSS VOLTAGE 125VDC	7		
SS40402559M4	NO CROSS VOLTAGE 120/50 VAC	7		
SS40403701	F5215BGB23A		SS40103701	9
SS40403701M2	F5215BGA23A	5	SS40103701	5, 9
SS40403722	F5215BGB19A		SS40103701	9
SS40403723	NO CROSS VOLTAGE 125VDC	7		
SS40403758	NO CROSS VOLTAGE 250VDC	7		
SS40405001	B723ADR53A		SS40105001	9
SS40405001M2	B723BDA53A	5	SS40105001	5, 9
SS40423759	NO CROSS VOLTAGE IS 120V/50HZ	7		
SS40423759M2	NO CROSS VOLTAGE IS 120V/50HZ	7		
SS40603701	F5215BJB23A		SS40103701	9, 10
SS40703701	F5215BJA23A		SS40103701	10
SS40705001	B723ADH53A		SS40105001	10
SS40705002	B723ADH57A			
SS40805001	B723ACH53A		SS40205001	11
SS50002501	F5513BGA23A		SS50103701 & Bush to 1/4"	12
SS50003701	F5515BGA23A		SS50103701	12
SS50003702	F5515BGA87A			
SS50005001	B753BDH53A		SS50105001	12
SS50023702	F5565BGA87A	3		
SS50023722	F5565BGA19A	3	SS50123722	12
SS50102501	F5513BGA23A		SS50103701 & Bush to 1/4"	
SS50102522	F5513BGA19A		SS50103722 & Bush to 1/4"	

Notes

1. This SS valve is modified for dual pressure application with highest pressure at the "Red" port. The F5 valve requires External Pilot and connect the high pressure to the #5 Port.
2. This SS valve is modified for dual pressure application with highest pressures at the "Black" port. The F5 valve requires External Pilot and connect the highest pressure to the #3 port.
3. This valve is attached to a Manifold Assembly. No direct replacement is available. Review application of valve configuration. Recommended F5 valve listed includes Manifold Base.
4. The M1 Modification was a Special External Pilot Drilling to the body for attaching the valve to a Manifold made by the BW Rogers Company for Firestone and Goodyear tire manufacturing industry. Review of application required for suitable replacement.
5. The M2 Modification was Non-Locking Manual Override on the Conduit End of valve only. SS4000 Series. The F5 or SS valve selected had Non-Locking Manual Overrides on both ends of the valve.
6. The M4 Modification was Non-Locking Manual Override opposite the Conduit End of the valve. SS4000 Series. The F5 or SS valve selected has Non-Locking Manual Overrides on both ends of the valve.
7. Use Repair Kits to Service Valve.
8. Field convert SS valve to Dual Pressure.
9. Selected SS valve has 18" Leads instead of 72" Leads.
10. Selected SS valve has Flush Type Non-Locking Manual Override instead of Knob Type Non-Locking Manual Override.
11. Selected SS valve has Flush Type Locking Manual Override instead of Knob Type Locking Manual Override.
12. Selected SS valve has Flush Type Non-Locking Manual Override instead of No Override.
13. Selected SS valve has No Indicator Light.

Tel: +45 63 12 83 00 | Email: ps@hymatik.com | www.hymatik.com | Hvidkaervej 27a, DK-5250 Odense SV, Denmark

Cross Reference

Obsolete SS Valve	Suggested Replacement	Notes	Alternate SS Valve	Notes
SS50103701M5	F5515LGA23A			
SS50103702	F5515BGA87A			
SS50103721	F5515BGA15A			
SS50105001M5	B753KDH53A			
SS50105002	B753BDH57A			
SS50105021	B753BDH45A			
SS50105023	NO CROSS VOLTAGE 125VDC	7		
SS50105058	NO CROSS VOLTAGE 250VDC	7		
SS50123702M1B		4		
SS50133701	F5513LGA23A	1	SS50103701	8
SS50202501	F5513BHA23A		SS50203701 & Bush to 1/4"	
SS50403701	F5515BGB23A		SS50103701	9
SS50405001	B753ADR53A		SS50105001	9
SS50502501	F5513BHB23A		SS50203701 & Bush to 1/4"	9
SS50505001	B753ACR53A		SS50205001	9
SS60002501	F5613BGA23A		SS60103701 & Bush to 1/4"	12
SS60002501M5	F5613LGA23A			
SS60002522	F5613BGA19A		SS60103722 & Bush to 1/4"	
SS60003701	F5615BGA23A		SS60103701	12
SS60005001	B763ADH53A		SS60105001	12
SS60005022	B763ADH49A		SS60105001	12
SS60032501	F5613LGA23A	1	SS60103701 & Bush to 1/4"	8
SS60102501	F5613BGA23A		SS60103701 & Bush to 1/4"	
SS60102521	F5613BGA15A			
SS60102522	F5613BGA19A		SS60103722 & Bush to 1/4"	
SS60103701M5	F5613LGA23A			
SS60103702	F5615BGA87A			
SS60105023	NO CROSS VOLTAGE 125VDC	7		
SS60123701	F5665BGA23A	3		
SS60135001	B763KDH53A	1	SS60105001	8
SS60405001	B763ADR53A		SS60105001	9
SS60405023	NO CROSS VOLTAGE 125VDC	7		
SSA120237	F5F65000XXA	3		
SSA141237	F5465000XXA	3		
SSA20023701	F5E65BGA23A	3	SSA20123701	12
SSA20023759	NO CROSS VOLTAGE IS 120V/50HZ	7		

Notes

1. This SS valve is modified for dual pressure application with highest pressure at the "Red" port. The F5 valve requires External Pilot and connect the high pressure to the #5 Port.
2. This SS valve is modified for dual pressure application with highest pressures at the "Black" port. The F5 valve requires External Pilot and connect the highest pressure to the #3 port.
3. This valve is attached to a Manifold Assembly. No direct replacement is available. Review application of valve configuration. Recommended F5 valve listed includes Manifold Base.
4. The M1 Modification was a Special External Pilot Drilling to the body for attaching the valve to a Manifold made by the BW Rogers Company for Firestone and Goodyear tire manufacturing industry. Review of application required for suitable replacement.
5. The M2 Modification was Non-Locking Manual Override on the Conduit End of valve only. SS4000 Series. The F5 or SS valve selected had Non-Locking Manual Overrides on both ends of the valve.
6. The M4 Modification was Non-Locking Manual Override opposite the Conduit End of the valve. SS4000 Series. The F5 or SS valve selected has Non-Locking Manual Overrides on both ends of the valve.
7. Use Repair Kits to Service Valve.
8. Field convert SS valve to Dual Pressure.
9. Selected SS valve has 18" Leads instead of 72" Leads.
10. Selected SS valve has Flush Type Non-Locking Manual Override instead of Knob Type Non-Locking Manual Override.
11. Selected SS valve has Flush Type Locking Manual Override instead of Knob Type Locking Manual Override.
12. Selected SS valve has Flush Type Non-Locking Manual Override instead of No Override.
13. Selected SS valve has No Indicator Light.

Tel: +45 63 12 83 00 | Email: ps@hymatik.com | www.hymatik.com | Hvidkaervej 27a, DK-5250 Odense SV, Denmark

Cross Reference

Obsolete SS Valve	Suggested Replacement	Notes	Alternate SS Valve	Notes
SSA20123701M1B		4		
SSA20123702	F5E65BGA87A	3		
SSA20123721	F5E65BGA15A	3		
SSA20223701M1B		4		
SSA20823701	F5E65BKA23A	3	SSA20223701	11
SSA40023701	F5265BGA23A	3	SSA40123701	12
SSA40023702	F5265BGA87A	3		
SSA40023759	NO CROSS VOLTAGE IS 120V/50HZ	7		
SSA40123701M1B		4		
SSA40123701M2	F5265BGA23A	3, 5	SSA40123701	5
SSA40123702	F5265BGA87A	3		
SSA40153701	F5265BKB23A	3	SSA40123701	8
SSA40223702	F5265BHA87A	3		
SSA40823701	F5265BKA23A	3	SSA40223701	11
SSA50023701	F5565BGA23A	3	SSA50123701	12
SSA50123702	F5565BGA87A	3		
SSA60123701	F5665BGA23A	3		
SSA60123701M1B		4		
SSA60123702	F5665BGA23A	3		
SSA60123722	F5665BGA19A	3		
SSA60223701	F5665BHA23A	3		
SSA60223702	F5665BHA87A	3		
SSA60233701	F5665LHA23A	1, 3		
SSL20102501	F5E13BGA23A		SS20103701 & Bush to 1/4"	13
SSL20103701	F5E15BGA23A		SS20103701	13
SSL20105001	B7E3ADH53A		SS20105001	13
SSL20105002	B7E3ADH57A			
SSL20203701	F5E15BHA23A		SS20203701	13
SSL20205001	B7E3ACH53A		SS20205001	13
SSL20803701	F5E15BKA23A		SS20203701	11, 13
SSL40102501	F5213BGA23A		SS40103701 & Bush to 1/4"	13
SSL40103701	F5215BGA23A		SS40103701	13
SSL40105001	B723BDH53A		SS40105001	13
SSL40133701	F5215LGA23A		SS40103701	8, 13
SSL40802501	F5215LKA23A	NOTE	SS40203701 & Bush to 1/4"	11, 13
SSL50103701	F5515BGA23A		SS50103701	13

Notes

1. This SS valve is modified for dual pressure application with highest pressure at the "Red" port. The F5 valve requires External Pilot and connect the high pressure to the #5 Port.
2. This SS valve is modified for dual pressure application with highest pressures at the "Black" port. The F5 valve requires External Pilot and connect the highest pressure to the #3 port.
3. This valve is attached to a Manifold Assembly. No direct replacement is available. Review application of valve configuration. Recommended F5 valve listed includes Manifold Base.
4. The M1 Modification was a Special External Pilot Drilling to the body for attaching the valve to a Manifold made by the BW Rogers Company for Firestone and Goodyear tire manufacturing industry. Review of application required for suitable replacement.
5. The M2 Modification was Non-Locking Manual Override on the Conduit End of valve only. SS4000 Series. The F5 or SS valve selected had Non-Locking Manual Overrides on both ends of the valve.
6. The M4 Modification was Non-Locking Manual Override opposite the Conduit End of the valve. SS4000 Series. The F5 or SS valve selected has Non-Locking Manual Overrides on both ends of the valve.
7. Use Repair Kits to Service Valve.
8. Field convert SS valve to Dual Pressure.
9. Selected SS valve has 18" Leads instead of 72" Leads.
10. Selected SS valve has Flush Type Non-Locking Manual Override instead of Knob Type Non-Locking Manual Override.
11. Selected SS valve has Flush Type Locking Manual Override instead of Knob Type Locking Manual Override.
12. Selected SS valve has Flush Type Non-Locking Manual Override instead of No Override.
13. Selected SS valve has No Indicator Light.

hymatik
Index
Tel: +45 63 12 83 00 | Email: ps@hymatik.com | www.hymatik.com | Hvidkaervej 27a, DK-5250 Odense SV, Denmark

Cross Reference

Obsolete SS Valve	Suggested Replacement	Notes	Alternate SS Valve	Notes
SSL50105001	B753ADH53A		SS50105001	13
SSL50205001	B753ACH53A		SS50205001	13
SSL60102501	F5613BGA23A		SS60103701 & Bush to 1/4"	13
SSL60103701	F5615BGA23A		SS60103701	13
SSL60103702	F6515BGA87A			
SSL60205001	B763ACH53A		SS60205001	13
SSWL20123701	F5265BGA23A	3		
SSWL50123701	F5565BGA23A	3		
SSW121237	F5F65000XXA	3		
SSW20123701	F5E65BGA23A	3		
SSW20123722	F5E65BGA19A	3		
SSW20223701	F5E65BHA23A	3		
SSW40123701	F5265BGA23A	3		
SSW40123722	F5265BGA19A	3		
SSW50123701	F5565BGA23A	3		
SSW60123701	F5665BGA23A	3		
SSXL20123701	F5E65BGA23A	3		
SSXL20223701	F5E65BHA23A	3		
SSXL20823701	F5E65BKA23A	3		
SSXL40123701	F5265BGA23A	3		
SSXL60123701	F5665BGA23A	3		
SSX141237	F5465000XXA	3		
SSX20123701	F5E65BGA23A	3		
SSX20123702	F5E65BGA87A	3		
SSX20123722	F5E65BGA19A	3		
SSX20223701	F5E65BHA23A	3		
SSX40123701	F5265BGA23A	3		
SSX40123702	F5265BGA87A	3		
SSX50123701	F5565BGA23A	3		
SSX50123702	F5565BGA87A	3		
SSX50123720	F5565BGA12A	3		
SSX50123722	F5565BGA19A	3		
SSX60123701	F5665BGA23A	3		

Notes

1. This SS valve is modified for dual pressure application with highest pressure at the "Red" port. The F5 valve requires External Pilot and connect the high pressure to the #5 Port.
2. This SS valve is modified for dual pressure application with highest pressures at the "Black" port. The F5 valve requires External Pilot and connect the highest pressure to the #3 port.
3. This valve is attached to a Manifold Assembly. No direct replacement is available. Review application of valve configuration. Recommended F5 valve listed includes Manifold Base.
4. The M1 Modification was a Special External Pilot Drilling to the body for attaching the valve to a Manifold made by the BW Rogers Company for Firestone and Goodyear tire manufacturing industry. Review of application required for suitable replacement.
5. The M2 Modification was Non-Locking Manual Override on the Conduit End of valve only. SS4000 Series. The F5 or SS valve selected had Non-Locking Manual Overrides on both ends of the valve.
6. The M4 Modification was Non-Locking Manual Override opposite the Conduit End of the valve. SS4000 Series. The F5 or SS valve selected has Non-Locking Manual Overrides on both ends of the valve.
7. Use Repair Kits to Service Valve.
8. Field convert SS valve to Dual Pressure.
9. Selected SS valve has 18" Leads instead of 72" Leads.
10. Selected SS valve has Flush Type Non-Locking Manual Override instead of Knob Type Non-Locking Manual Override.
11. Selected SS valve has Flush Type Locking Manual Override instead of Knob Type Locking Manual Override.
12. Selected SS valve has Flush Type Non-Locking Manual Override instead of No Override.
13. Selected SS valve has No Indicator Light.

Tel: +45 63 12 83 00 | Email: ps@hymatik.com | www.hymatik.com | Hvidkaervej 27a, DK-5250 Odense SV, Denmark

Offer Of Sale

The items described in this document and other documents or descriptions provided by Parker Hannifin Corporation, its subsidiaries and its authorized distributors, are hereby offered for sale at prices to be established by Parker Hannifin Corporation, its subsidiaries and its authorized distributors. This offer and its acceptance by any customer ("Buyer") shall be governed by all of the following Terms and Conditions. Buyer's order for any such item, when communicated to Parker Hannifin Corporation, its subsidiaries or an authorized distributor ("Seller") verbally or in writing, shall constitute acceptance of this offer.

1. Terms and Conditions of Sale: All descriptions, quotations, proposals, offers, acknowledgments, acceptances and sales of Seller's products are subject to and shall be governed exclusively by the terms and conditions stated herein. Buyer's acceptance of any offer to sell is limited to these terms and conditions. Any terms or conditions in addition to, or inconsistent with those stated herein, proposed by Buyer in any acceptance of an offer by Seller, are hereby objected to. No such additional, different or inconsistent terms and conditions shall become part of the contract between Buyer and Seller unless expressly accepted in writing by Seller. Seller's acceptance of any offer to purchase by Buyer is expressly conditional upon Buyer's assent to all the terms and conditions stated herein, including any terms in addition to, or inconsistent with those contained in Buyer's offer. Acceptance of Seller's products shall in all events constitute such assent.

2. Payment: Payment shall be made by Buyer net 30 days from the date of delivery of the items purchased hereunder. Amounts not timely paid shall bear interest at the maximum rate permitted by law for each month or portion thereof that the Buyer is late in making payment. Any claims by Buyer for omissions or shortages in a shipment shall be waived unless Seller receives notice thereof within 30 days after Buyer's receipt of the shipment.

3. Delivery: Unless otherwise provided on the face hereof, delivery shall be made F.O.B. Seller's plant. Regardless of the method of delivery, however, risk of loss shall pass to Buyer upon Seller's delivery to a carrier. Any delivery dates shown are approximate only and Seller shall have no liability for any delays in delivery.

4. Warranty: Seller warrants that the items sold hereunder shall be free from defects in material or workmanship for a period of 18 months from date of shipment from Parker Hannifin Corporation. THIS WARRANTY COMPRISES THE SOLE AND ENTIRE WARRANTY PERTAINING TO ITEMS PROVIDED HEREUNDER. SELLER MAKES NO OTHER WARRANTY, GUARANTEE, OR REPRESENTATION OF ANY KIND WHATSOEVER. ALL OTHER WARRANTIES, INCLUDING BUT NOT LIMITED TO, MERCHANTABILITY AND FITNESS FOR PURPOSE, WHETHER EXPRESS, IMPLIED, OR ARISING BY OPERATION OF LAW, TRADE USAGE, OR COURSE OF DEALING ARE HEREBY DISCLAIMED.

NOTWITHSTANDING THE FOREGOING, THERE ARE NO WARRANTIES WHATSOEVER ON ITEMS BUILT OR ACQUIRED WHOLLY OR PARTIALLY, TO BUYER'S DESIGN OR SPECIFICATIONS.

5. Limitation of Remedy: SELLER'S LIABILITY ARISING FROM OR IN ANY WAY CONNECTED WITH THE ITEMS SOLD OR THIS CONTRACT SHALL BE LIMITED EXCLUSIVELY TO REPAIR OR REPLACEMENT OF THE ITEMS SOLD OR REFUND OF THE PURCHASE PRICE PAID BY BUYER, AT SELLER'S SOLE OPTION. IN NO EVENT SHALL SELLER BE LIABLE FOR ANY INCIDENTAL, CONSEQUENTIAL OR SPECIAL DAMAGES OF ANY KIND OR NATURE WHATSOEVER, INCLUDING BUT NOT LIMITED TO LOST PROFITS ARISING FROM OR IN ANY WAY CONNECTED WITH THIS AGREEMENT OR ITEMS SOLD HEREUNDER, WHETHER ALLEGED TO ARISE FROM BREACH OF CONTRACT, EXPRESS OR IMPLIED WARRANTY, OR IN TORT, INCLUDING WITHOUT LIMITATION, NEGLIGENCE, FAILURE TO WARN OR STRICT LIABILITY.

6. Changes, Reschedules and Cancellations: Buyer may request to modify the designs or specifications for the items sold hereunder as well as the quantities and delivery dates thereof, or may request to cancel all or part of this order, however, no such requested modification or cancellation shall become part of the contract between Buyer and Seller unless accepted by Seller in a written amendment to this Agreement. Acceptance of any such requested modification or cancellation shall be at Seller's discretion, and shall be upon such terms and conditions as Seller may require.

7. Special Tooling: A tooling charge may be imposed for any special tooling, including without limitations, dies, fixtures, molds and patterns, acquired to manufacture items sold pursuant to this contract. Such special tooling shall be and remain Seller's property notwithstanding payment of any charges by Buyer. In no event will Buyer acquire any interest in apparatus belonging to Seller which is utilized in the manufacture of the items sold hereunder, even if such apparatus has been specially converted or adapted for such manufacture and notwithstanding any charges paid by Buyer. Unless otherwise agreed, Seller shall have the right to alter, discard or otherwise dispose of any special tooling or other property in its sole discretion at any time.

8. Buyer's Property: Any designs, tools, patterns, materials, drawings, confidential information or equipment furnished by Buyer, or any other items which become Buyer's property, may be considered obsolete and may be destroyed by Seller after two (2) consecutive years have elapsed without Buyer placing an order for the items which are manufactured using such property. Seller shall not be responsible for any loss or damage to such property while it is in Seller's possession or control.

9. Taxes: Unless otherwise indicated on the face hereof, all prices and charges are exclusive of excise, sales, use, property, occupational or like taxes which may be imposed by any taxing authority upon the manufacture, sale or delivery of the items sold hereunder. If any such taxes must be paid by Seller or if Seller is liable for the collection of such tax, the amount thereof shall be in addition to the amounts for the items sold. Buyer agrees to pay all such taxes or to reimburse Seller therefore upon receipt of its invoice. If Buyer claims exemption from any sales, use or other tax imposed by any taxing authority, Buyer shall save Seller harmless from and against any such tax, together with any interest or penalties thereon which may be assessed if the items are held to be taxable.

10. Indemnity For Infringement of Intellectual Property Rights: Seller shall have no liability for infringement of any patents, trademarks, copyrights, trade dress, trade secrets or similar rights except as provided in this Part 10. Seller will defend and indemnify Buyer against allegations of infringement of U.S. patents, U.S. trademarks, copyrights, trade dress and trade secrets (hereinafter "Intellectual Property Rights"). Seller will defend at its expense and will pay the cost of any settlement or damages awarded in an action brought against Buyer based on an allegation that an item sold pursuant to this contract infringes the Intellectual Property Rights of a third party. Seller's obligation to defend and indemnify Buyer is contingent on Buyer notifying Seller within ten (10) days after Buyer becomes aware of such allegations of infringement, and Seller having sole control over the defense of any allegations or actions including all negotiations for settlement or compromise. If an item sold hereunder is subject to a claim that it infringes the Intellectual Property Rights of a third party, Seller may, at its sole expense and option, procure for Buyer the right to continue using said item, replace or modify said item so as to make it noninfringing, or offer to accept return of said item and return the purchase price less a reasonable allowance for depreciation. Notwithstanding the foregoing, Seller shall have no liability for claims of infringement based on information provided by Buyer, or directed to items delivered hereunder for which the designs are specified in whole or part by Buyer, or infringements resulting from the modification, combination or use in a system of any item sold hereunder. The foregoing provisions of this Part 10 shall constitute Seller's sole and exclusive liability and Buyer's sole and exclusive remedy for infringement of Intellectual Property Rights.

If a claim is based on information provided by Buyer or if the design for an item delivered hereunder is specified in whole or in part by Buyer, Buyer shall defend and indemnify Seller for all costs, expenses or judgements resulting from any claim that such item infringes any patent, trademark, copyright, trade dress, trade secret or any similar right.

11. Force Majeure: Seller does not assume the risk of and shall not be liable for delay or failure to perform any of Seller's obligations by reason of circumstances beyond the reasonable control of Seller (hereinafter "Events of Force Majeure"). Events of Force Majeure shall include without limitation, accidents, acts of God, strikes or labor disputes, acts, laws, rules or regulations of any government or government agency, fires, floods, delays or failures in delivery of carriers or suppliers, shortages of materials and any other cause beyond Seller's control.

12. Entire Agreement/Governing Law: The terms and conditions set forth herein, together with any amendments, modifications and any different terms or conditions expressly accepted by Seller in writing, shall constitute the entire Agreement concerning the items sold, and there are no oral or other representations or agreements which pertain thereto. This Agreement shall be governed in all respects by the law of the State of Ohio. No actions arising out of sale of the items sold hereunder or this Agreement may be brought by either party more than two (2) years after the cause of action accrues.

Parker Hannifin Corporation
Pneumatic Division North America
Richland, Michigan
www.parker.com/pneumatic

Tel: +45 63 12 83 00 | Email: ps@hymatik.com | www.hymatik.com | Hvidkaervej 27a, DK-5250 Odense SV, Denmark

Parker Hannifin Corporation
Pneumatic Division
8676 E. M89
P.O. Box 901
Richland, MI 49083 USA
Tel: (269) 629-5000
Fax: (269) 629-5385

Customer/Technical Service
Tel: (269) 629-5575
Fax: (269) 629-5385
Website: www.parker.com/pneumatic
E-mail: PDNMKTG@parker.com

Catalog 0620-E/USA 4/04 IGS Printed in U.S.A.