



aerospace
climate control
electromechanical
filtration
fluid & gas handling
hydraulics
pneumatics
process control
sealing & shielding



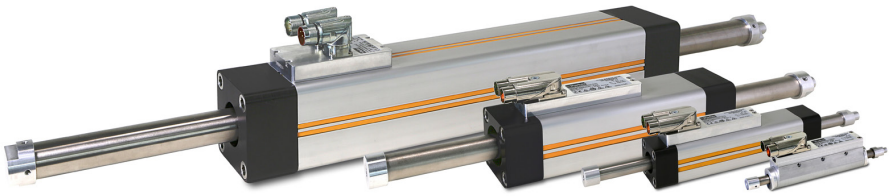

ETT - Electric Tubular Motor

Linear Handling and Pick & Place Applications

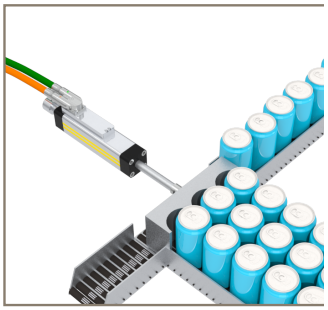

Parker

ENGINEERING YOUR SUCCESS.

WARNING — USER RESPONSIBILITY

FAILURE OR IMPROPER SELECTION OR IMPROPER USE OF THE PRODUCTS DESCRIBED HEREIN OR RELATED ITEMS CAN CAUSE DEATH, PERSONAL INJURY AND PROPERTY DAMAGE.

- This document and other information from Parker-Hannifin Corporation, its subsidiaries and authorized distributors provide product or system options for further investigation by users having technical expertise.
- The user, through its own analysis and testing, is solely responsible for making the final selection of the system and components and assuring that all performance, endurance, maintenance, safety and warning requirements of the application are met. The user must analyze all aspects of the application, follow applicable industry standards, and follow the information concerning the product in the current product catalog and in any other materials provided from Parker or its subsidiaries or authorized distributors.
- To the extent that Parker or its subsidiaries or authorized distributors provide component or system options based upon data or specifications provided by the user, the user is responsible for determining that such data and specifications are suitable and sufficient for all applications and reasonably foreseeable uses of the components or systems.

Table of Contents

Electric Tubular Motor - ETT

Overview 5

Technical Characteristics 7
- Technical Data 7
- Standards and Conformance 11
- Dimensions 12
- ETT - Length of Rod / Table of Stroke 12

Accessories and Options 16
- Mounting Methods 16
- Cylinder Rod Version 18
- ETT with Slide Guide System 20

Feedback 22
- Internal Position Sensor-Analogue Sin/Cos 22
- Internal Position Sensor-Incremental TTL 22
- Internal Position Sensor-BISS-C 22
- External Linear Encoders 22

Cables and connectors 23
- Layout and Connectors ETT025 - ETT050 24
- Layout and Connectors ETT080 24

Application Examples 25

Step by Step Selection Process 26

ETT Range Sizing 27

Servo Drives Products 29

Order Code 30
- ETT Electric Tubular Motor (Complete Unit) 30
- ETT Electric Tubular Motor (Rod only) 31
- ETT Electric Tubular Motor (Coil only) 32
- ETT Motor and Signal Cable 33

Tel: +45 63 12 83 00 | Email: ps@hymatik.com | www.hymatik.com | Hvidkaervej 27a, DK-5250 Odense SV, Denmark

Parker Hannifin

The global leader in motion and control technologies

Global Product Design

Parker Hannifin has more than 40 years experience in the design and manufacturing of drives, controls, motors and mechanical products. With dedicated global product development teams, Parker draws on industry-leading technological leadership and experience from engineering teams in Europe, North America and Asia.

Local Application Expertise

Parker has local engineering resources committed to adapting and applying our current products and technologies to best fit our customers' needs.

Manufacturing to Meet Our Customers' Needs

Parker is committed to meeting the increasing service demands that our customers require to succeed in the global industrial market. Parker's manufacturing teams seek continuous improvement through the implementation of lean manufacturing methods throughout the process. We measure ourselves on meeting our customers' expectations of quality and delivery, not just our own. In order to meet these expectations, Parker operates and continues to invest in our manufacturing facilities in Europe, North America and Asia.

Electromechanical Worldwide Manufacturing Locations

Europe
Littlehampton, United Kingdom
Dijon, France
Offenburg, Germany
Filderstadt, Germany
Milan, Italy

Asia
Wuxi, China
Jangan, Korea
Chennai, India

North America
Rohnert Park, California
Irwin, Pennsylvania
Charlotte, North Carolina
New Ulm, Minnesota



Offenburg, Germany

Local Manufacturing and Support in Europe

Parker provides sales assistance and local technical support through a network of dedicated sales teams and authorized technical distributors throughout Europe.

For contact information, please refer to the Sales Offices on the back cover of this document or visit www.parker.com



Milan, Italy



Littlehampton, UK



Filderstadt, Germany



Dijon, France

Electric Tubular Motor - ETT

Overview

Description

ETT is a direct thrust linear motor actuator, ideally suited to all kinds of linear handling and pick & place applications. It is a cost-effective and energy-efficient alternative to pneumatic cylinders in applications that demand greater flexibility and control.
The ETT's linear motion is directly generated without the need for mechanical transmission elements like ball screws, toothed belts and gearboxes. The tubular motor has two main components; the rod (shaft) and the stator with integrated feedback (body). The shaft is made of a stainless steel tube with built in neodymium magnets, which thanks to their high performance, are able to deliver impressive thrust values up to 2083 N. The main body comprises the stator winding, the feedback electronics and high performance bearings. A major benefit of the ETT design is that long and/or heavy duty cycles are possible without the need for additional cooling. The IP67 protection class allows the ETT tubular motor to be used in harsh environmental conditions.



Technical Characteristics - Overview

Motor type	Linear tubular servo motor
Rod	AISI304 (stainless steel)
Rated force	8...295 N
Peak force	56...2083 N
Speed range	up to 8 m/s
Acceleration range	up to 350 m/s^2
Mounting	Screw fixed
Shaft end	Front male thread, Rear cap end Other options available
Cooling	Natural ventilation
Protection level (IEC60034-5)	IP67
Feedback sensor	Analog Hall 1Vpp (SinCos 90°) Other feedback on request
Thermal protection	KTY PTC or PT1000 as option
Marking	CE
Voltage supply	230 VAC (all sizes) 400 VAC (only ETT80)
Temperature class	Class F
Connections	Connectors Flying leads as option
Bi-directional accuracy	0.5 mm

Features

- **Ultra dynamic linear motion and position control capabilities**
- **Ideally suited for pneumatic substitution where greater position control capabilities are required**
- **Four lengths and four sizes meeting the requirements of the pneumatic ISO flange standard (DIN ISO 15552:2005-12) for simplified mechanical integration**
- **Swivelling electrical connectors and extensive accessory options allow flexible mounting**
- **Reduced mechanical complexity delivers high energy efficiency and reduces maintenance**
- **AISI304 stainless steel shaft allows it's use in "clean" environments**
- **High thermal efficiency improves reliability and increases mechanical life**
- **Wide choice of rod end mounting options, including swivel rod eye, increases flexibility**

Target markets

- **Food, Pharmaceutical & Beverage**
- **Packaging Machines**
- **Material Handling**
- **Factory Automation**

Tel: +45 63 12 83 00 | Email: ps@hymatik.com | www.hymatik.com | Hvidkaervej 27a, DK-5250 Odense SV, Denmark

Product Design ETT Tubular Motor

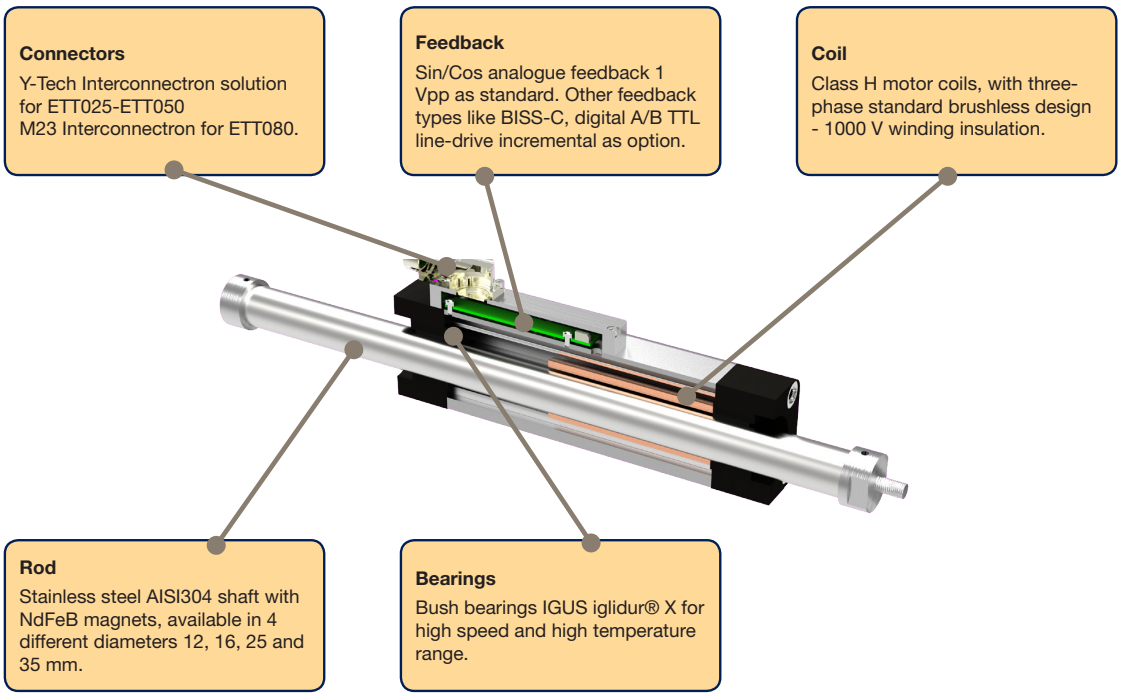

Product Design ETT Tubular Motor with Slide Guide System

For more information please check page 20

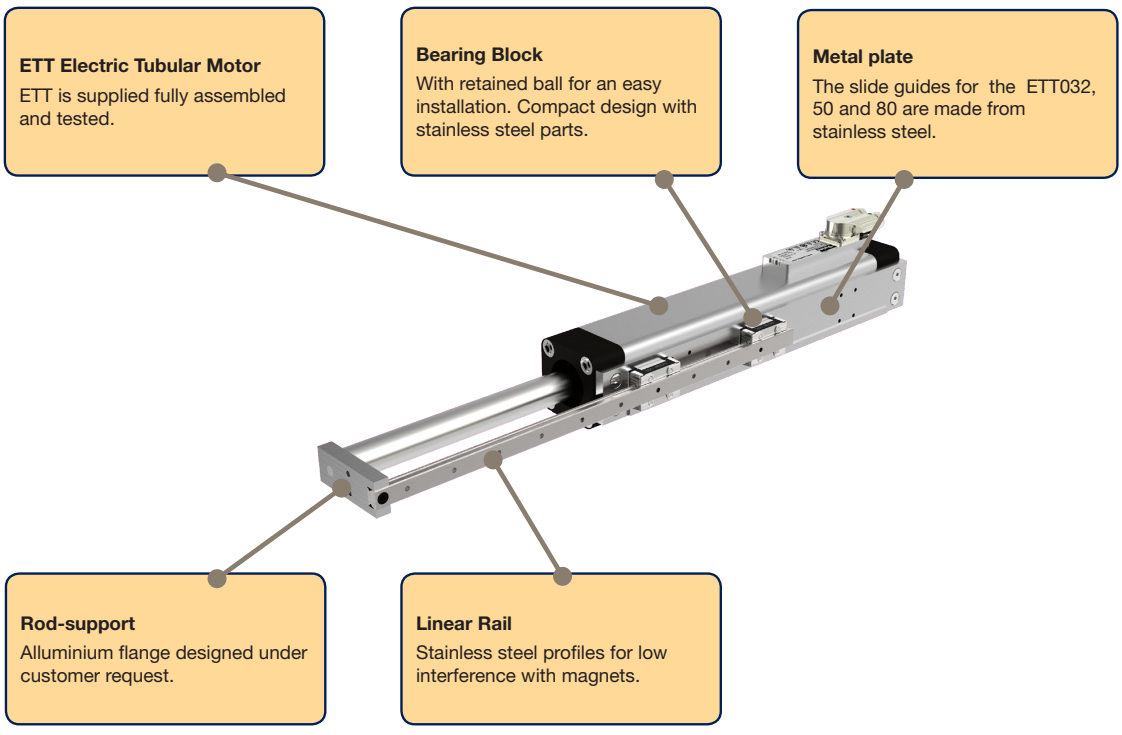

Tel: +45 63 12 83 00 | Email: ps@hymatik.com | www.hymatik.com | Hvidkaervej 27a, DK-5250 Odense SV, Denmark

Technical Characteristics

Technical Data

ETT025

ETT025	Unit	ETT025S1*	ETT025S2	ETT025S3*
Peak force [1) 2) 4)]	[N]	56	80	93
Peak current	[A]	4.8	4.6	4.0
Without heatsink plate				
Continous stall force duty cycle S1 [1)]	[N]	8	11	13
Continous stall current duty cycle S1 [1)]	[A]	0.7	0.7	0.6
Force @ duty cycle S3 5% [1)]	[N]	36	50	59
Current @ duty cycle S3 5% [1)]	[A]	3.0	2.9	2.6
Force constant	[N/A]	11.80	17.37	22.95
Back EMF (ph-ph,rms)	[V_{rms}/(m/s)]	6.81	10.03	13.25
Phase resistance	[ohm]	17.17	25.06	33.89
Phase inductance	[mH]	5.42	7.89	10.46
Power supply (drive side)	VAC		230	
Max DC bus voltage	VDC		325	
Pole pitch			60	
Maximum stroke [5)]	[mm]		360	
Peak acceleration [3)]	[m/s^2]	155	220	254
Position repeatability	[mm]		0.05	
Accuracy	[mm]		0.5	

[1)] Data valid at an ambient temperature of 25 °C; [2)] Based on triangular move over maximum stroke with normal payload
[3)] Based on a 100 mm stroke, without payload; [4)] Considering a duty cycle of S3 2%; [5)] Other value under request
Manufacturing tolerance ±10%; *Duty cycle S1 and S3 compliant to CEI EN60034-1 with max time 5 minutes

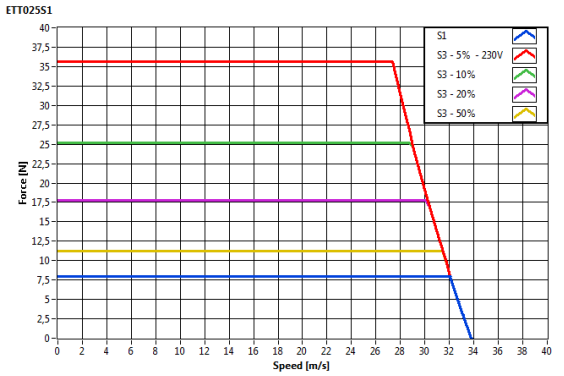

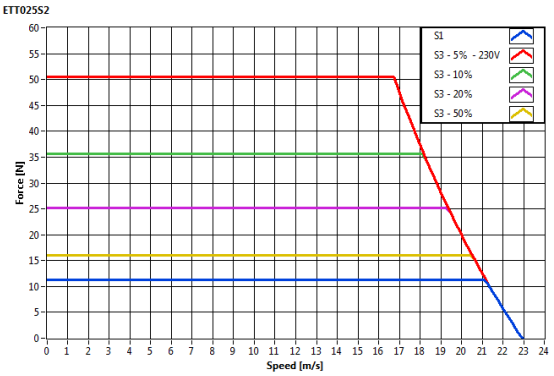

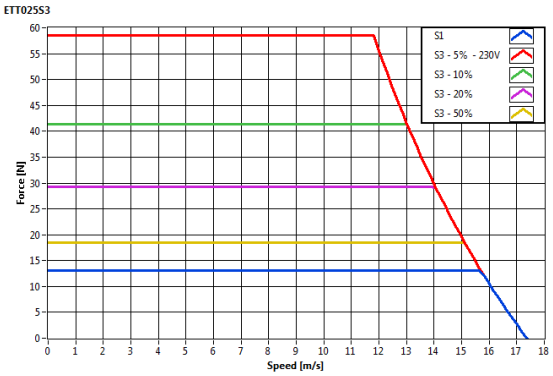

Curves based on rod movement.
Curves based on a theoretical system without load and without stroke limits. Max. duty cycle 5 minutes.
These ratings are valid for Parker Hannifin drives. Other drives might not achieve the same ratings.

Tel: +45 63 12 83 00 | Email: ps@hymatik.com | www.hymatik.com | Hvidkaervej 27a, DK-5250 Odense SV, Denmark

ETT032

ETT032	Unit	ETT032S1*	ETT032S2	ETT032S3*
Peak force [1) 2) 4)]	[N]	95	126	169
Peak current	[A]	4.4	4.0	3.8
Without heatsink plate				
Continous stall force duty cycle S1 [1)]	[N]	13	18	24
Continous stall current duty cycle S1 [1)]	[A]	0.6	0.6	0.5
Force @ duty cycle S3 5% [1)]	[N]	60	80	107
Current @ duty cycle S3 5% [1)]	[A]	2.8	2.5	2.4
Force constant	[N/A]	21.67	31.89	45.05
Back EMF (ph-ph,rms)	[V_{rms}/(m/s)]	12.51	18.41	26.01
Phase resistance	[ohm]	31.46	43.84	58.50
Phase inductance	[mH]	14.57	21.75	28.94
Power supply (drive side)	VAC		230	
Max DC bus voltage	VDC		325	
Pole pitch			60	
Maximum stroke [5)]	[mm]	660	630	600
Peak acceleration [3)]	[m/s^2]	224	258	307
Position repeatability	[mm]		0.05	
Accuracy	[mm]		0.5	

[1)] Data valid at an ambient temperature of 25 °C; [2)] Based on triangular move over maximum stroke with normal payload
[3)] Based on a 100 mm stroke, without payload; [4)] Considering a duty cycle of S3 2%; [5)] Other value under request
Manufacturing tolerance ±10%; *Duty cycle S1 and S3 compliant to CEI EN60034-1 with max time 5 minutes.

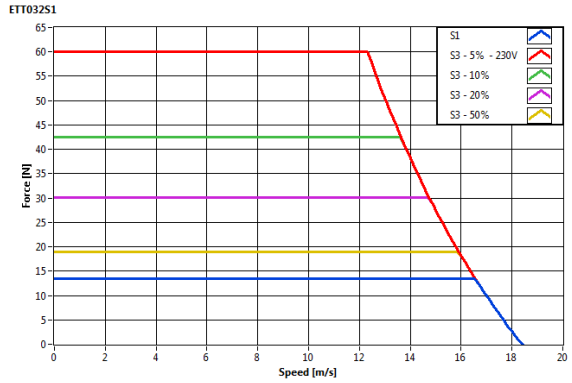

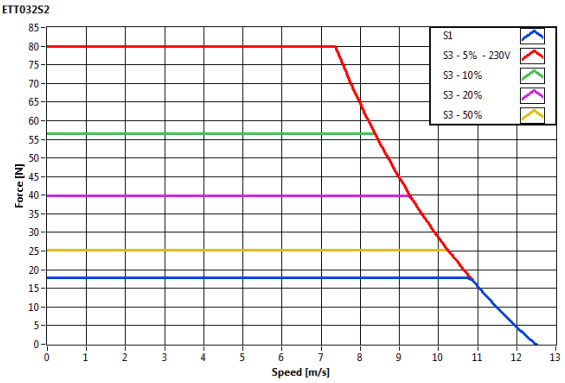

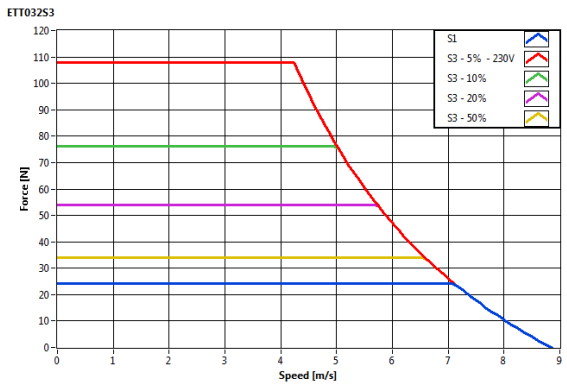

Curves based on rod movement.
Curves based on a theoretical system without load and without stroke limits. Max. duty cycle 5 min.
These ratings are valid for Parker Hannifin drives. Other drives might not achieve the same ratings.

Tel: +45 63 12 83 00 | Email: ps@hymatik.com | www.hymatik.com | Hvidkaervej 27a, DK-5250 Odense SV, Denmark

ETT050

ETT050	Unit	ETT050S1*	ETT050S2	ETT050S3*
Peak force [1) 2) 4)]	[N]	238	361	746
Peak current	[A]	4.7	4.6	7.4
Without heatsink plate				
Continous stall force duty cycle S1 [1)]	[N]	34	51	106
Continous stall current duty cycle S1 [1)]	[A]	0.7	0.7	1.1
Force @ duty cycle S3 5% [1)]	[N]	151	228	472
Current @ duty cycle S3 5% [1)]	[A]	3.0	2.9	4.7
Force constant	[N/A]	50.30	78.55	100.53
Back EMF (ph-ph,rms)	[V_{rms}/(m/s)]	41.07	64.13	82.08
Phase resistance	[ohm]	42.41	62.70	58.04
Phase inductance	[mH]	23.55	34.70	22.70
Power supply (drive side)	VAC		230	
Max DC bus voltage	VDC		325	
Pole pitch			60	
Maximum stroke [5)]	[mm]	720	690	540
Peak acceleration [3)]	[m/s^2]	199	264	337
Position repeatability	[mm]		0.05	
Accuracy	[mm]		0.5	

[1)] Data valid at an ambient temperature of 25 °C; [2)] Based on triangular move over maximum stroke with normal payload
[3)] Based on a 100 mm stroke, without payload; [4)] Considering a duty cycle of S3 2%; [5)] Other value under request
Manufacturing tolerance ±10%; *Duty cycle S1 and S3 compliant to CEI EN60034-1 with max time 5 minutes.

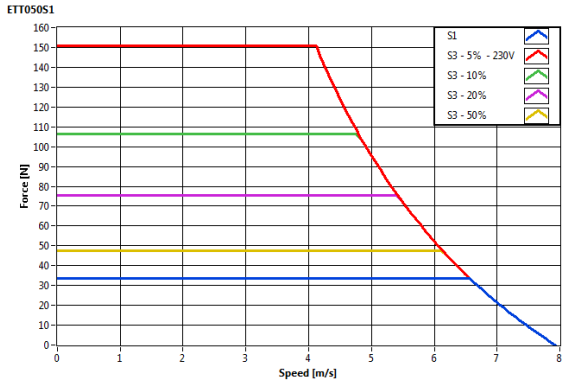

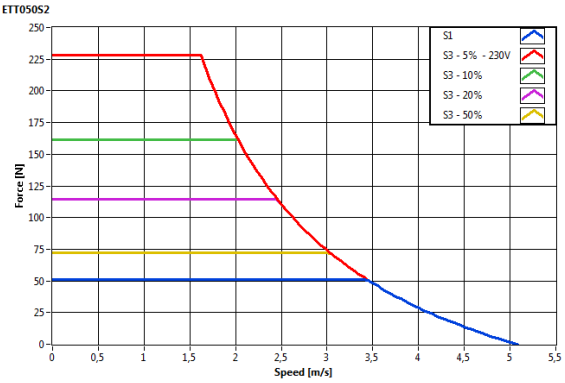

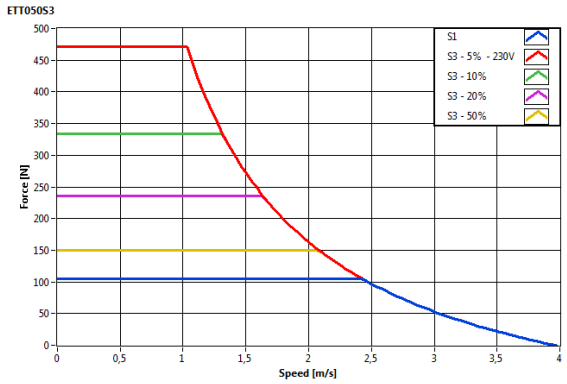

Curves based on rod movement.
Curves based on a theoretical system without load and without stroke limits. Max. duty cycle 5 min.
These ratings are valid for Parker Hannifin drives. Other drives might not achieve the same ratings.

Tel: +45 63 12 83 00 | Email: ps@hymatik.com | www.hymatik.com | Hvidkaervej 27a, DK-5250 Odense SV, Denmark

ETT080

ETT080 Power supply 230-400 VAC	Unit	ETT080S2	ETT080S3*	ETT080S4	ETT080S5
Peak force [1) 2) 4)]	[N]	686	852	1506	2083
Peak current	[A]	12.5	11.7	20.5	29.0
Without heatsink plate					
Continous stall force duty cycle S1 [1)]	[N]	97	120	213	295
Continous stall current duty cycle S1 [1)]	[A]	1.8	1.7	2.9	4.1
Force @ duty cycle S3 5% [1)]	[N]	434	539	952	1318
Current @ duty cycle S3 5% [1)]	[A]	7.9	7.4	13.0	18.3
Force constant	[N/A]	54.80	72.57	73.44	71.88
Back EMF (ph-ph,rms)	[V_{rms}/(m/s)]	31.64	59.26	42.4	41.5
Phase resistance	[ohm]	11.14	14.81	7.65	5.25
Phase inductance	[mH]	12.80	17.06	7.50	5.51
Power supply (drive side)	VAC	230/400			
Max DC bus voltage	VDC	325/566			
Pole pitch		60			
Maximum stroke [5)]	[mm]	736	706	586	460
Peak acceleration [3)]	[m/s^2]	238	264	330	352
Position repeatability	[mm]	0.05			
Accuracy	[mm]	0.5			

[1)] Data valid at an ambient temperature of 25 °C; [2)] Based on triangular move over maximum stroke with normal payload
[3)] Based on a 100 mm stroke, without payload; [4)] Considering a duty cycle of S3 2%; [5)] Other value under request
Manufacturing tolerance ±10%; *Duty cycle S3 compliant to CEI EN60034-1 with max time 5 minutes.

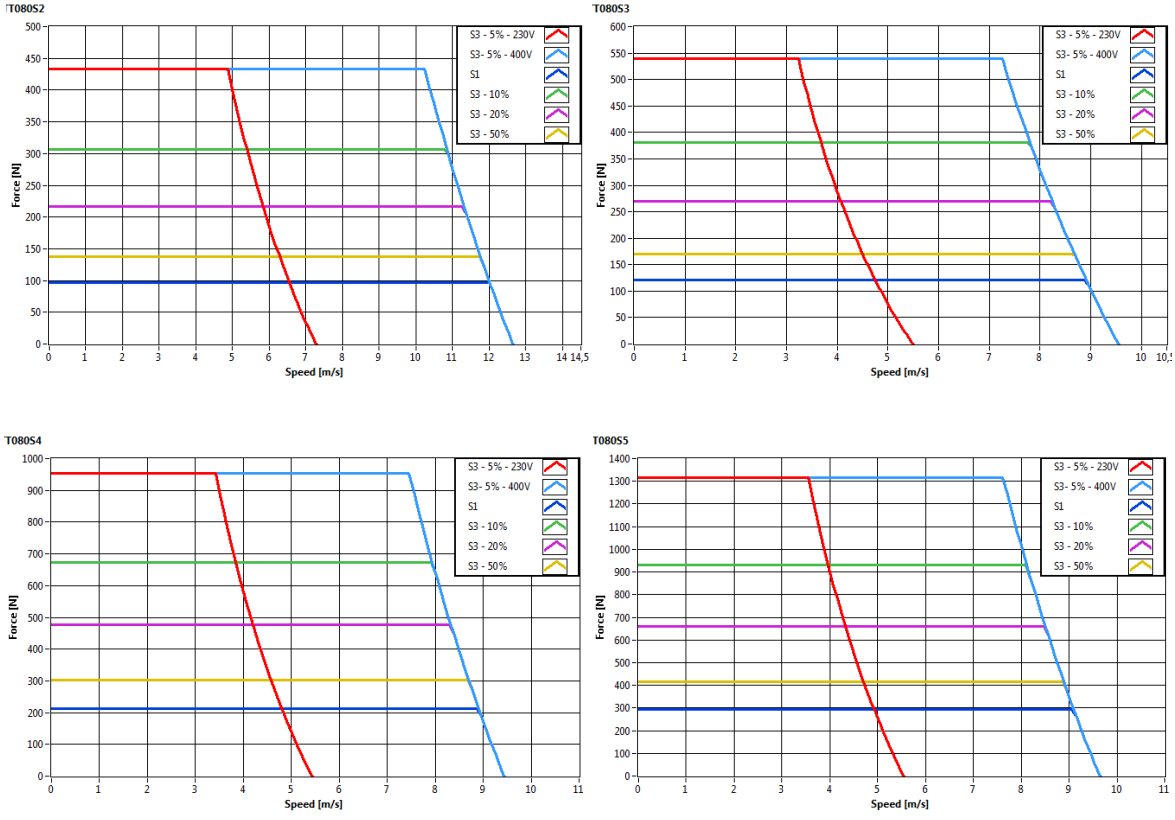

Curves based on road movement.
Curves based on a theoretical system without load and without stroke limits. Max. duty cycle 5 min.
These ratings are valid for Parker Hannifin drives. Other drives might not achieve the same ratings.

Tel: +45 63 12 83 00 | Email: ps@hymatik.com | www.hymatik.com | Hvidkaervej 27a, DK-5250 Odense SV, Denmark

Standards and Conformance

Low Voltage Directive	
	• 2006/95/EC
EMC Directive	
	• 2004/108/EC
Generic standard - Emission standard for industrial enviroments	
	• CEI EN 61000-6-4:2007
Generic standard - Immunity for industrial enviroments	
	• CEI EN 61000-6-2:2006

Marked CE

Tel: +45 63 12 83 00 | Email: ps@hymatik.com | www.hymatik.com | Hvidkaervej 27a, DK-5250 Odense SV, Denmark

Dimensions

ETT025

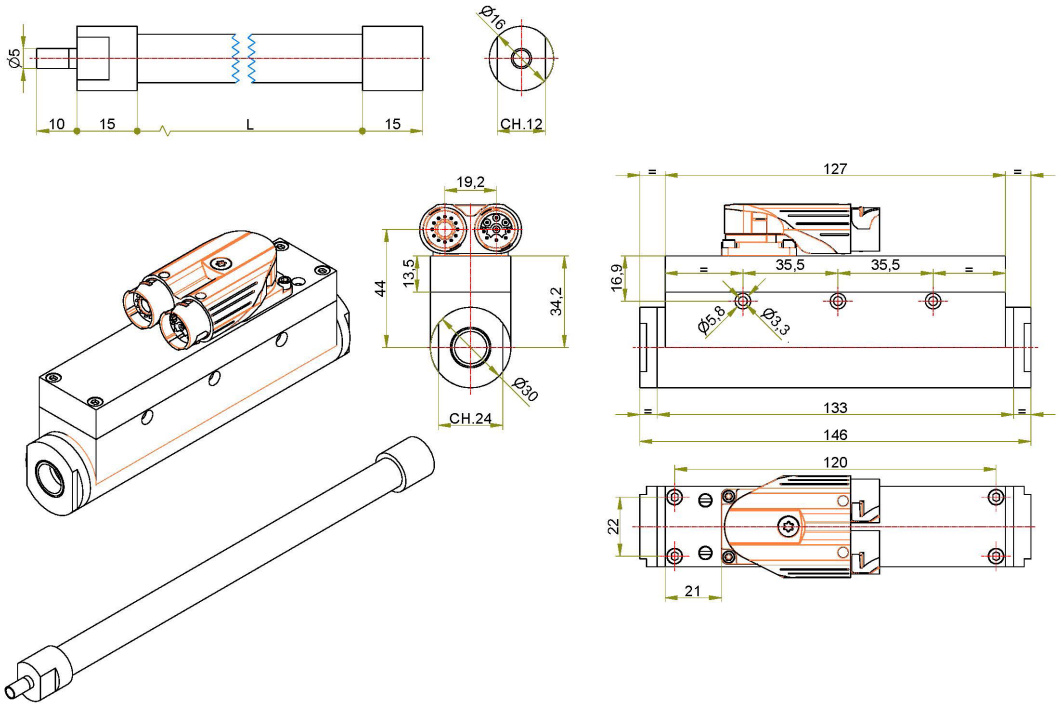

ETT - Length of Rod / Table of Stroke

ETT025

Part Number Codification	Rod "F"		Rod "N"		Rod "M"		Rod "G"		Stroke		
	Length [mm]	Weight [kg]	Length [mm]	Weight [kg]	Length [mm]	Weight [kg]	Length [mm]	Weight [kg]	S1 [mm]	S2 [mm]	S3 [mm]
0205	204	0.216	216	0.216	206	0.216	212	0.217	20	20	20
0215	214	0.23	226	0.23	216	0.23	222	0.231	30	30	30
0245	244	0.271	256	0.271	246	0.271	252	0.272	60	60	60
0275	274	0.311	286	0.311	276	0.311	282	0.312	90	90	90
0305	304	0.352	316	0.352	306	0.352	312	0.353	120	120	120
0335	334	0.393	346	0.393	336	0.393	342	0.394	150	150	150
0365	364	0.434	376	0.434	366	0.434	372	0.435	180	180	180
0395	394	0.475	406	0.475	396	0.475	402	0.476	210	210	210
0425	424	0.515	436	0.515	426	0.515	432	0.516	240	240	240
0455	454	0.556	466	0.556	456	0.556	462	0.557	270	270	270
0485	484	0.597	496	0.597	486	0.597	492	0.598	300	300	300
0515	514	0.638	526	0.638	516	0.638	522	0.639	330	330	330
0545	544	0.679	556	0.679	546	0.679	552	0.68	360	360	360
								Coil weight [kg]	0.5	0.5	0.6

Max rod length allowed 750 mm.

Tel: +45 63 12 83 00 | Email: ps@hymatik.com | www.hymatik.com | Hvidkaervej 27a, DK-5250 Odense SV, Denmark

Dimensions

ETT032

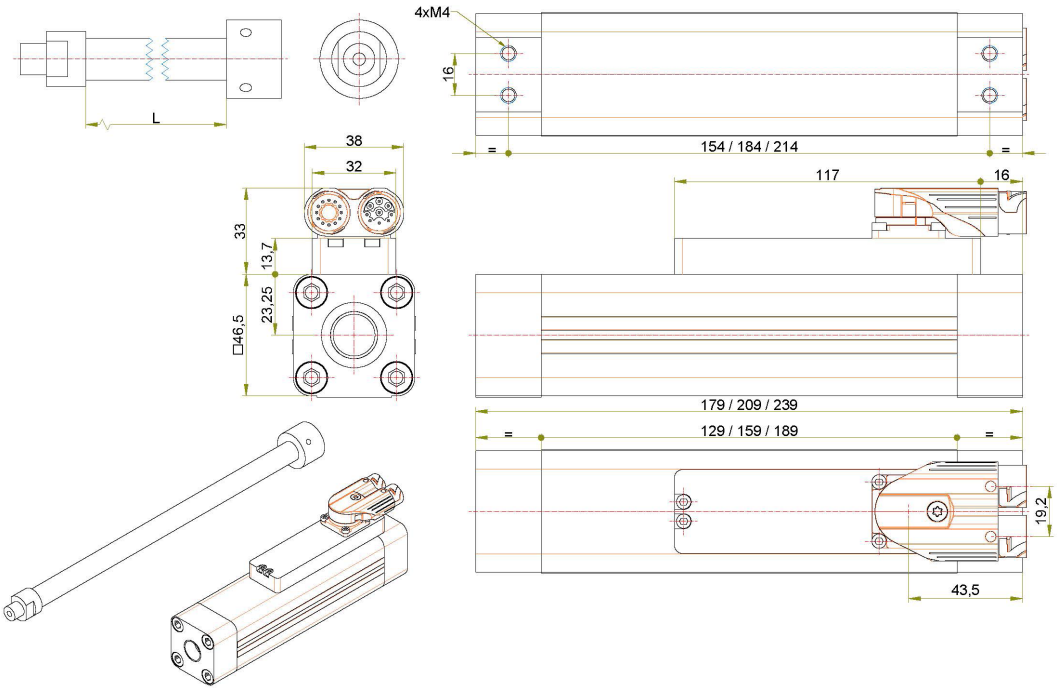

ETT - Length of Rod / Table of Stroke

ETT032

Part Number Codification	Rod "F"		Rod "N"		Rod "M"		Rod "G"		Stroke		
	Length [mm]	Weight [kg]	Length [mm]	Weight [kg]	Length [mm]	Weight [kg]	Length [mm]	Weight [kg]	S1 [mm]	S2 [mm]	S3 [mm]
0221	227	0.185	239	0.184	228	0.184	237	0.186	30		
0251	257	0.227	269	0.226	258	0.226	267	0.228	60	30	
0281	287	0.268	299	0.267	288	0.267	297	0.269	90	60	30
0311	317	0.31	329	0.309	318	0.309	327	0.311	120	90	60
0341	347	0.352	359	0.351	348	0.351	357	0.353	150	120	90
0371	377	0.394	389	0.393	378	0.393	387	0.395	180	150	120
0401	407	0.436	419	0.435	408	0.435	417	0.437	210	180	150
0431	437	0.478	449	0.477	438	0.477	447	0.479	240	210	180
0461	467	0.519	479	0.518	468	0.518	477	0.52	270	240	210
0491	497	0.561	509	0.56	498	0.56	507	0.562	300	270	240
0521	527	0.603	539	0.602	528	0.602	537	0.604	330	300	270
0551	557	0.645	569	0.644	558	0.644	567	0.646	360	330	300
0581	587	0.687	599	0.686	588	0.686	597	0.688	390	360	330
0611	617	0.729	629	0.728	618	0.728	627	0.73	420	390	360
0641	647	0.771	659	0.77	648	0.77	657	0.772	450	420	390
0671	677	0.812	689	0.811	678	0.811	687	0.813	480	450	420
0701	707	0.854	719	0.853	708	0.853	717	0.855	510	480	450
0731	737	0.896	749	0.895	738	0.895	747	0.897	540	510	480
0761	767	0.938	779	0.937	768	0.937	777	0.939	570	540	510
0791	797	0.98	809	0.979	798	0.979	807	0.981	600	570	540
0821	827	1.022	839	1.021	828	1.021	837	1.023	630	600	570
0851	857	1.063	869	1.062	858	1.062	867	1.064	660	630	600
							Coil weight [kg]		0.89	1.01	1.16

Max rod length allowed 1250 mm.

Tel: +45 63 12 83 00 | Email: ps@hymatik.com | www.hymatik.com | Hvidkaervej 27a, DK-5250 Odense SV, Denmark

Dimensions

ETT050

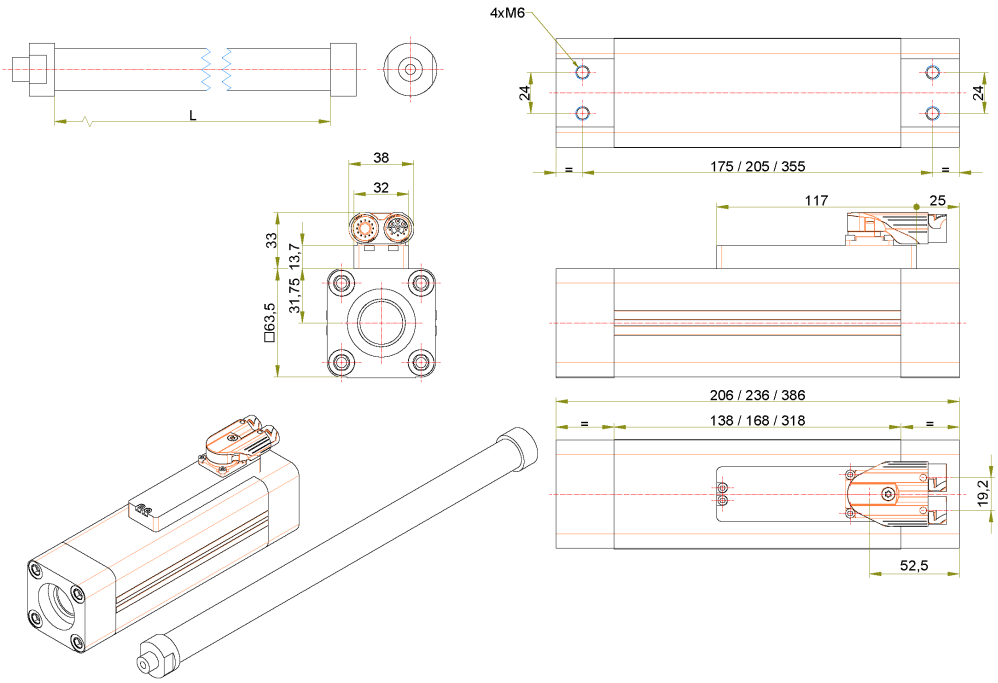

ETT - Length of Rod / Table of Stroke

ETT050

Part Number Codification	Rod "F"		Rod "N"		Rod "M"		Rod "G"		Stroke		
	Length [mm]	Weight [kg]	Length [mm]	Weight [kg]	Length [mm]	Weight [kg]	Length [mm]	Weight [kg]	S1 [mm]	S2 [mm]	S3 [mm]
0254	254	0.759	274	0.758	259	0.758	264	0.76	30		
0284	284	0.866	304	0.865	289	0.865	294	0.867	60	30	
0314	314	0.973	334	0.972	319	0.972	324	0.974	90	60	
0344	344	1.08	364	1.079	349	1.079	354	1.081	120	90	
0374	374	1.187	394	1.186	379	1.186	384	1.188	150	120	
0404	404	1.294	424	1.293	409	1.293	414	1.295	180	150	
0434	434	1.401	454	1.4	439	1.4	444	1.402	210	180	30
0464	464	1.508	484	1.507	469	1.507	474	1.509	240	210	60
0494	494	1.614	514	1.613	499	1.613	504	1.615	270	240	90
0524	524	1.721	544	1.72	529	1.72	534	1.722	300	270	120
0554	554	1.828	574	1.827	559	1.827	564	1.829	330	300	150
0584	584	1.935	604	1.934	589	1.934	594	1.936	360	330	180
0614	614	2.042	634	2.041	619	2.041	624	2.043	390	360	210
0644	644	2.149	664	2.148	649	2.148	654	2.15	420	390	240
0674	674	2.256	694	2.255	679	2.255	684	2.257	450	420	270
0704	704	2.363	724	2.362	709	2.362	714	2.364	480	450	300
0734	734	2.47	754	2.469	739	2.469	744	2.471	510	480	330
0764	764	2.576	784	2.575	769	2.575	774	2.577	540	510	360
0794	794	2.683	814	2.682	799	2.682	804	2.684	570	540	390
0824	824	2.79	844	2.789	829	2.789	834	2.791	600	570	420
0854	854	2.897	874	2.896	859	2.896	864	2.898	630	600	450
0884	884	3.004	904	3.003	889	3.003	894	3.005	660	630	480
0914	914	3.111	934	3.11	919	3.11	924	3.112	690	660	510
0944	944	3.218	964	3.217	949	3.217	954	3.219	720	690	540
							Coil weight [kg]		1.54	1.765	3.005

Max rod length allowed 1500 mm.

Tel: +45 63 12 83 00 | Email: ps@hymatik.com | www.hymatik.com | Hvidkaervej 27a, DK-5250 Odense SV, Denmark

Dimensions

ETT080

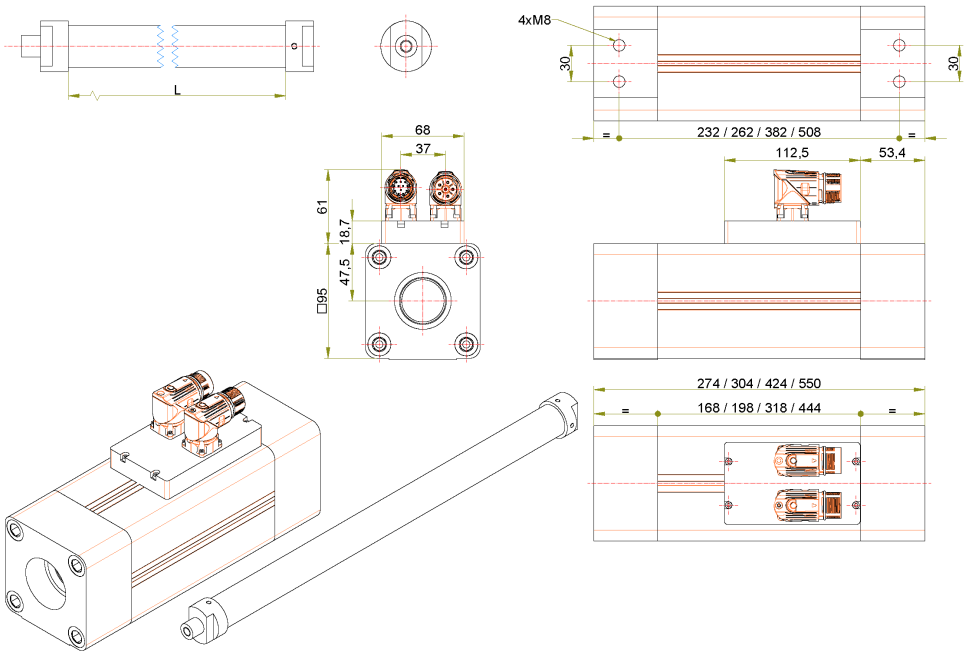

ETT - Length of Rod / Table of Stroke

ETT080

Part Number Codification	Rod "F"		Rod "N"		Rod "M"		Rod "G"		Stroke			
	Length [mm]	Weight [kg]	Length [mm]	Weight [kg]	Length [mm]	Weight [kg]	Length [mm]	Weight [kg]	S2 [mm]	S3 [mm]	S4 [mm]	S5 [mm]
0338	338	1.99	362	1.99	350	2.00	354	2.00	46			
0368	368	2.20	392	2.20	380	2.22	384	2.22	76	46		
0398	398	2.42	422	2.42	410	2.43	414	2.43	106	76		
0428	428	2.63	452	2.63	440	2.64	444	2.64	136	106		
0458	458	2.84	482	2.84	470	2.85	474	2.85	166	136		
0488	488	3.05	512	3.05	500	3.07	504	3.07	196	166	46	
0518	518	3.27	542	3.27	530	3.28	534	3.28	226	196	76	
0548	548	3.48	572	3.48	560	3.49	564	3.49	256	226	106	
0578	578	3.69	602	3.69	590	3.71	594	3.71	286	256	136	
0608	608	3.90	632	3.90	620	3.92	624	3.92	316	286	166	40
0638	638	4.12	662	4.12	650	4.13	654	4.13	346	316	196	70
0668	668	4.33	692	4.33	680	1.34	684	4.34	376	346	226	100
0698	698	4.54	722	4.54	710	4.56	714	4.56	406	376	256	130
0728	728	4.75	752	4.75	740	4.77	744	4.77	436	406	286	160
0758	758	4.97	782	4.97	770	4.98	774	4.98	466	436	316	190
0788	788	5.18	812	5.18	800	5.19	804	5.19	496	466	346	220
0818	818	5.39	842	5.39	830	5.41	834	5.41	526	496	376	250
0848	848	5.60	872	5.60	860	5.62	864	5.62	556	526	406	280
0878	878	5.82	902	5.82	890	5.83	894	5.83	586	556	436	310
0908	908	6.03	932	6.03	920	6.04	924	6.04	616	586	466	340
0938	938	6.24	962	6.24	950	6.26	954	6.26	646	616	496	370
0968	968	6.45	992	6.45	980	6.47	984	6.47	676	646	526	400
0998	998	6.67	1022	6.67	1010	6.68	1014	6.68	706	676	556	430
1028	1028	6.88	1052	6.88	1040	6.89	1044	6.89	736	706	586	460
								Coil weight [kg]	4.4	5	7	9.55

Max rod length allowed 1750 mm

Tel: +45 63 12 83 00 | Email: ps@hymatik.com | www.hymatik.com | Hvidkaervej 27a, DK-5250 Odense SV, Denmark

Accessories and Options

Mounting Methods

Front and Rear Plate

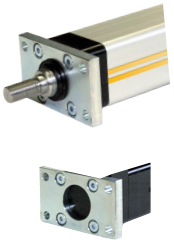

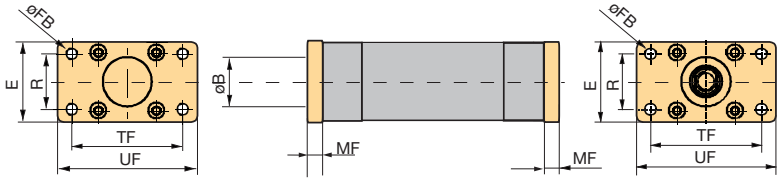

Front and rear plate dimensions

	Order no. (1 piece)	UF	E	TF	ØFB	R	MF	ØB
		[mm]	[mm]	[mm]	[mm]	[mm]	[mm]	[mm]
ETT032	0112.918	80	48	64	7	32	10	30
ETT050	0122.918	110	65	90	9	45	12	40
ETT080	0132.918	150	95	126	12	63	16	60

Spare parts delivery includes screws for mounting.

Please note that front and rear plate as spare parts must be ordered separately.

Mounting Brackets

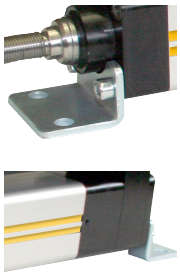

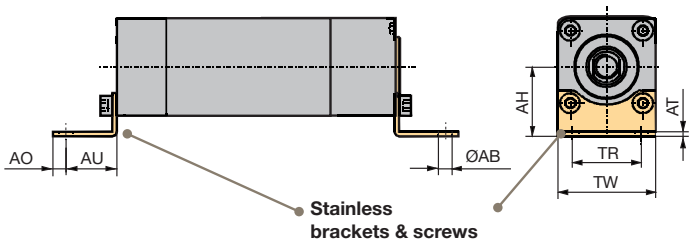

	Order no. Front & Terminal bracket	AH	AT	TR	ØAB (H14)	AO	AU	TW
		[mm]	[mm]	[mm]	[mm]	[mm]	[mm]	[mm]
ETT032	0112.916	32	4	32	7	8	24	46.5
ETT050	0122.916	44	4	45	9	12	32	63.5
ETT080	0132.916	47	6	72	13.5	15	41	95

Spare parts delivery includes screws for mounting.

* For protection classes, we recommend GEOMET® coated screws (thin layer corrosion protection).

Tel: +45 63 12 83 00 | Email: ps@hymatik.com | www.hymatik.com | Hvidkaervej 27a, DK-5250 Odense SV, Denmark

Mounting Flanges

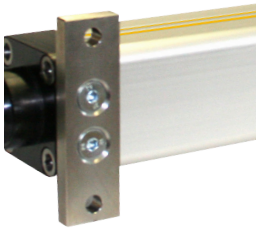

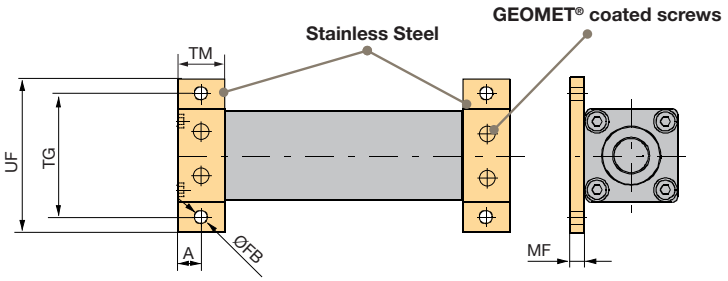

	Order no. (2 piece)	TG	UF	ØFB	TM	MF	A
		[mm]	[mm]	[mm]	[mm]	[mm]	[mm]
ETT032	0112.917E	62	78	6.6	25	8	12.5
ETT050	0122.917E	84	104	9	30	10	15
ETT080	0132.917E	120	144	13.5	40	12	20

Spare parts delivery includes screws for mounting.

* For protection classes, we recommend GEOMET® coated screws (thin layer corrosion protection).

Tel: +45 63 12 83 00 | Email: ps@hymatik.com | www.hymatik.com | Hvidkaervej 27a, DK-5250 Odense SV, Denmark

Cylinder Rod Version

Plastic Swivel Rod Eye



KBRM	-05	-06	-08	-10
	ETT025	ETT032	ETT050	ETT080
d1 E10	5	6	8	10
d2	18	20	24	30
d3	M5	M6	M8	M10
d4	9.0	10.0	13.0	15
d5	12.0	13.0	16.0	19
C1	6.0	7.0	9.0	10.5
B	8	9	12	14
h1	27	30	36	43
l1	10	12	16	20
l2	36	40	48	58
W	SW09	SW11	SW14	SW17
Pitch	30°	29°	25°	25°

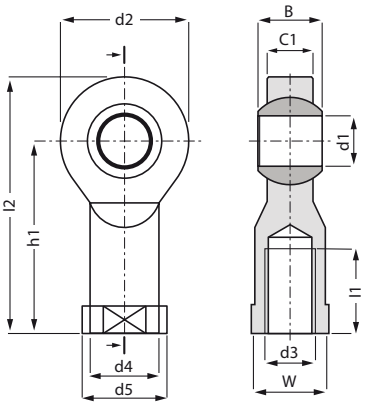

manufactured by igus®

Plastic Rod Clevis



GERM	-05	-06	-08	-10
	ETT025	ETT032	ETT050	ETT080
d1 H9	5	6	8	10
g h11	12	12	16	20
a1 +0.3 / -0.16	12	12	16	20
a2 +0.3 / -0.16	12	12	16	20
b1 B13	6	6	8	10
d2 6H *	M5	M6	M8	M10
d3 +0.3 / -0.3	10.0	10.0	14.0	18.0
l2 +0.5 / -0.5	31.0	31.0	42.0	52.0
h1 +0.3 / -0.3	24.0	24.0	32.0	40.0
l1 +0.2 / -0.2	9.0	9.0	12.0	15.0

* Thread tolerance

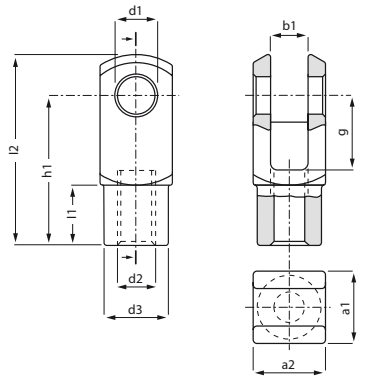

manufactured by igus®

Alignment Coupler

Spring system

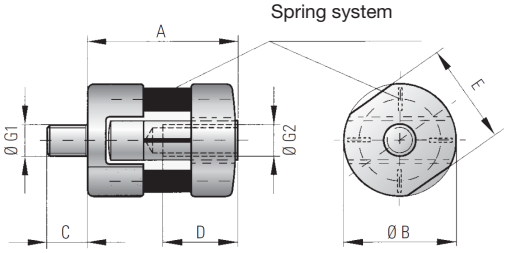



manufactured by R+W®

LK	70	150	300	500
	ETT025	ETT032	ETT050	ETT080
Pressure force [N]	70	150	300	500
A	24	33	41.5	52
B	18	22	30	42
G1/2	M5	M6	M8	M10
G1/2* [Nm]	4	7	18	30
C	6.5	8	10	13
D	10	12	16	20
E	16	20	27	38
Mass [g]	11	23	57	135
Lateral restoring force (max) (N)	10	18	48	96
Lateral mov. (max) [mm]	0.5	0.5	0.5	0.7
Angular mov. (max)	1.5°	1.5°	1.5°	1.5°

* Max. tightening torque thread
All alignment coupler sizes are sized on continuous force of ETT. For other force options, please contact Parker

Sealing Rings

ETT motors can be equipped with sealing rings for protecting the coil from contaminants, spray water or excessive grease loss; thus increasing the motor service life.



Sealing rings of special design	
Material	Thermoplastic polyurethane elastomer
Colour	Green
Temperature range	From - 30 °C to + 100 °C
Hardness	47 ± Shore D
Ageing resistance Light	Very good
Ozone	Good
Media resistance Mineral oils, greases	Yes*
Highly blended/synthetic lubricants	No*
Aggressive	No*

Adding sealing rings will change some ETT requirements:
- rod must be lubricated with grease type RHEOSIL 500F
- speed is limited up to 3 m/s max
- temperature range changes to -30 °C... + 100 °C
- stroke of the rod decreases
- rotating movements are not allowed
- rod needs to be kept clean

*Please contact your nearest sales office

ETT with Slide Guide System

As the system is based on polymer plain bearings, the motor shaft can only sustain limited radial loads; the slide guide system of the ETT motor makes it the ideal solution for applications requiring an anti-rotational device and where lateral force occurs.

Two different configuration layouts are available:

ETT with Slide Guide System

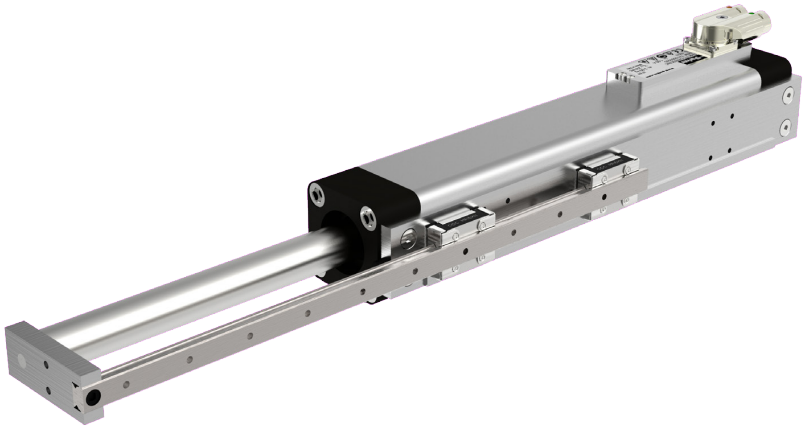

Coil movement for long stroke and heavy load

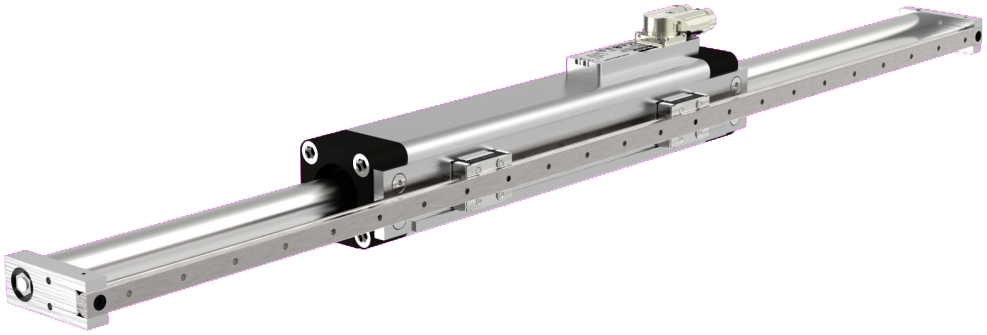

Tel: +45 63 12 83 00 | Email: ps@hymatik.com | www.hymatik.com | Hvidkaervej 27a, DK-5250 Odense SV, Denmark

Both solutions use an external system of block bearing, rail and rod-end designed for a specific application. An external linear feedback can be added on the mechanical system to improve the precision and repeatability of the system.
With coil movement it's recommended to remove the bush bearing, it's mandatory for long stokes.

Structure of the Slide Guide System

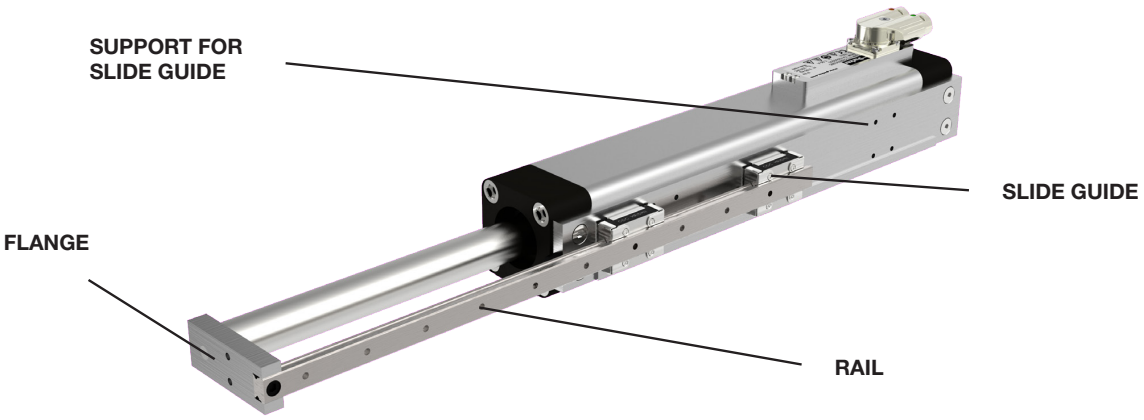

RAIL		
Series	**ETT-LR**	Rail option
Rail type	**1**	Type NB
ETT motor size	**025**	n.a.
	032	Designed for motor size 032 - 9 mm size
	050	Designed for motor size 050 - 15 mm size
	080	Designed for motor size 080 - 20 mm size
Length	**xxx**	*See table of rod length

SLIDE GUIDE		
Series	**ETT-LC**	Slide guide option
Rail type	**1**	Type NB
ETT motor size	**025**	n.a.
	032	Designed for motor size 032 - 9 mm size
	050	Designed for motor size 050 - 15 mm size
	080	Designed for motor size 080 - 20 mm size

FLANGE		
Series	**ETT-LF**	Flange option
Side of flange	**F**	Front flange
	R	Rear flange
ETT motor size	**025**	n.a.
	032	Designed for motor size 032 - 9 mm size
	050	Designed for motor size 050 - 15 mm size
	080	Designed for motor size 080 - 20 mm size

SUPPORT FOR SLIDE GUIDE		
Series	**ETT-LA**	Metal support for slide guide option
ETT motor size	**025**	n.a.
	032	Designed for motor size 032 - 9 mm size
	050	Designed for motor size 050 - 15 mm size
	080	t.b.d.
Length	**S1**	Winding: Serial, Stack Length 1 - not available for size 080
	S2	Winding: Serial, Stack Length 2
	S3	Winding: Serial, Stack Length 3
	S4	Winding: Serial, Stack Length 4 - only size 080
	S5	Winding: Serial, Stack Length 5 - only size 080

The solution can be ordered as a complete system mounted and tested.
The slide guide system structure results in a reduction of ETT performance due to additional moving mass and friction.
ETT with slide guide system is an ideal solution for easy integration into pick and place gantries and general purpose material handling machines.

Tel: +45 63 12 83 00 | Email: ps@hymatik.com | www.hymatik.com | Hvidkaervej 27a, DK-5250 Odense SV, Denmark

Feedback

Internal position sensor-analogue sin/cos

The position sensor outputs analogue, differential sine and cosine signals for providing position feedback. Shown below in the follow table the main features of sin/cos feedback.

	ETT025	ETT032	ETT050	ETT080
Pole pitch [mm]	60	60	60	60
Output current [mA]	50	50	50	50
Supply voltage [VDC]	5 ± 0.25			
Supply current [mA]	40 ± 10%			
Repeatability up to [µm]	± 50			

Internal position sensor-incremental TTL

The incremental position sensor outputs have TTL line drives signals, A and B, /A and /B without track of zero. The resolution is programmable and the default value is 2048 increments.

	ETT025	ETT032	ETT050	ETT080
Pole pitch [mm]	60	60	60	60
Output signals	A, B, /A, /B			
Supply voltage [VDC]	5 ± 0.25			
Supply current [mA]	100 ± 10%			
Repeatability up to [µm]	± 50			
Resolution with 2048 increments [µm]	29.3			
System accuracy [mm]	± 0.5			
Error of linearity	< 1%			
Max resolution	24 bit			

Internal position sensor-BISS-C

The internal feedback allows to have a BISS-C interface option. The electronic board contains an integrated sensor, interpolation electronics and motor parameters as electronic data sheet (EDS).

	ETT025	ETT032	ETT050	ETT080
Pole pitch [mm]	60	60	60	60
Output signals	BISS-C RS485 serial			
Supply voltage [VDC]	5 ± 0.25			
Supply current [mA]	100 ± 10%			
Repeatability up to [µm]	± 50			
Resolution with 2048 increments [µm]	29.3			
System accuracy [mm]	± 0.5			
Error of linearity	< 1%			
Max resolution	8192 increments			

External Linear Encoders

To achieve highest accuracy, the most popular feedback device for linear motor positioning systems is the linear encoder. There are two variants of linear encoders available; magnetic and optical.

MSK500010KE1	Incremental, digital interface, resolution 1 µm • Magnetic encoder • Max. resolution up to 1 µm • Repeat accuracy ±0.01 mm • Status LED display • Works with magnetic band MB500 • Reading distance up to 2 m
LIC 2117	Absolute, EnDat interface, resolution 0.1 µm • Optical encoder • Max. resolution up to 0.1 µm • Repeat accuracy ±15 µm • EnDat2.2 • Reading distance up to 3 m

Tel: +45 63 12 83 00 | Email: ps@hymatik.com | www.hymatik.com | Hvidkaervej 27a, DK-5250 Odense SV, Denmark

Cables and connectors

All cable kits are optimally configured for our servo products line. The characteristics of the cables include: low adhesion, halogen free and flame-retardant according to the requirements DIN VDE 0472. Resistant to oil, grease, coolant and lubricants.

Motor connection power cable

Type	ETT-CAP
Cable design	
Conductor material	Stranded copper
Core structure	(3 + T) x 1.5 mm^2
Core insulation	TEO-Flexene®
Outer sheath	Polyurethane
Colour sheath	Orange RAL2003
Technical data	
Rated voltage	Power: 600/1000 V
Dielectric strength	Power: 4000 V
Insulation resistance	Power: > 2500 MOhm x km
Minimum bending radius	7.5 x diam. unsupported chain 10 x diam. long travel
Max. speed	240 m/min.
Max. acceleration	20 m/sec^2
Cycles	10000000
Opearating temperature	-30 + 80 °C
Outer diameter	8.5 mm



Motor connection signal cable

Type	ETT-CAS
Cable design	
Conductor material	Stranded copper
Core structure	[3x(2x0.14 SK)+2x(0.50 SK)] SK
Core insulation	TPE-E
Outer sheath	Polyurethane
Colour sheath	Green RAL6018
Technical data	
Rated voltage	30 V
Dielectric strength	1500 V
Insulation resistance	> 10 MOhm x km
Minimum bending radius	90 mm
Max. speed	240 m/min.
Max. acceleration	20 m/sec^2
Cycles	≥ 5000000
Opearating temperature	-30 + 80 °C
Outer diameter	8.4 mm



Tel: +45 63 12 83 00 | Email: ps@hymatik.com | www.hymatik.com | Hvidkaervej 27a, DK-5250 Odense SV, Denmark

Layout and Connectors ETT025 - ETT050

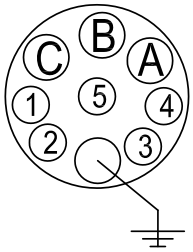

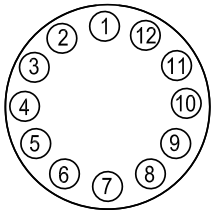

Power connector

Pin	Description
A	U
B	W
C	V
PE	PE
1	n.c.
2	n.c.
3	n.c.
4	n.c.
5	n.c.

Type	
CONMOTYF	Female connector

Feedback connector

Pin	Description
1	COS -
2	COS +
3	n.c.
4	KTY84 -
5	KTY84 +
6	n.c.
7	SIN -
8	SIN +
9	n.c.
10	+5 V
11	n.c.
12	GND - shield

Type	
CONRESYF	Female connector

Layout and Connectors ETT080

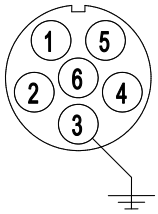

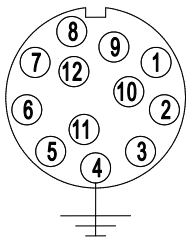

Power connector

Pin	Description
1	U
2	V
3	GND - shield
4	n.c.
5	n.c.
6	W

Type	
CONMOT82F	Female connector

Feedback connector

Pin	Description
1	SIN -
2	SIN +
3	n.c.
4	GND - shield
5	n.c.
6	n.c.
7	EXCT -
8	KTY -
9	KTY +
10	EXCT +
11	COS +
12	COS -

Type	
CONRES82F	Female connector

Tel: +45 63 12 83 00 | Email: ps@hymatik.com | www.hymatik.com | Hvidkaervej 27a, DK-5250 Odense SV, Denmark

Application Examples



Stacking

The ETT manages the stacking of CD's after the printing section. Thanks to the complete and ready to use direct drive solution, no more time is spent in assembling and aligning different elements (gearbox, belts and pulley, motor,etc).

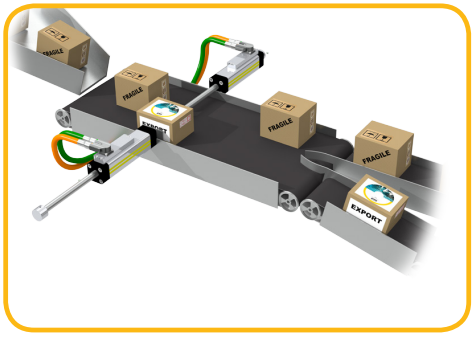

Sorting

A supervision system manages the boxes and moves them onto different conveyors following their layout. Both ETT tubular motors are synchronised and can quickly adapt to the box's dimensions. The quick positioning is the main advantage for system performance.

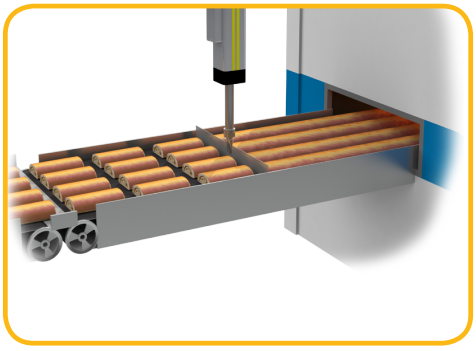

Cutting

Here the ETT function is to cut the material all to the same length. The ETT high force level and synchronization with the conveyor are key benefits in this application. The level of control offered by the ETT means that it is easy to change the format of the material.

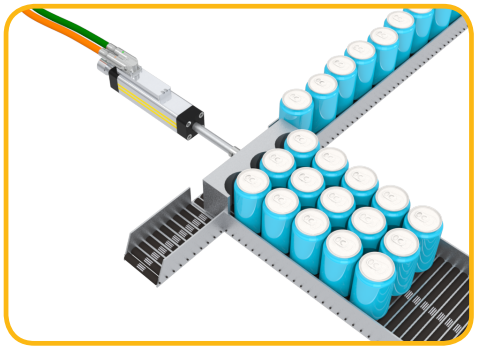

Re-positioning

ETT is used to accurately reposition products on conveyors. The flexible dynamic positioning offered by the electric tubular motor guarantees the perfect alignment for different product formats whilst fewer components improves energy efficiency.

Tel: +45 63 12 83 00 | Email: ps@hymatik.com | www.hymatik.com | Hvidkaervej 27a, DK-5250 Odense SV, Denmark

Step by Step Selection Process

The following sizing steps help to choose the most suitable electric tubular motor.
1. Select an ETT using estimated application data.
2. Calculate the actually required application data following the dimensioning steps described below.
3. If your application's requirements exceed a maximum value, please choose a larger electro cylinder and recheck the maximum values. Perhaps, a smaller tubular motor can also meet the requirements.

Step	Application data	Selection
1	Accuracy, ambient conditions	Check the basic conditions for the use of the ETT in your application.
2	Required space	Check the space available in your application and choose the motor mounting option: rod movement or coil movement
3	Select stroke	Selection of the desired stroke: Determine required stroke from usable stroke and safety travels select the desired stroke from the list of standard strokes or, if the desired stroke is not listed: Define the length of the usable stroke in steps of one mm. Caution! Please respect the minimum and the maximum possible stroke
4	Maximum force required	Determination of the maximum required axial force (traction and thrust force). With evaluation of duty cycle
5	Select position mounting	Check if the ETT orientation is vertical or horizontal
6	Maximum speed	Selection of the maximum speed required for the application
7	Application cycle	Please check the application cycle
8	Permissible thrust force taking the buckling risk into consideration	Check the maximum thrust force depending on the stroke and the mounting variant. Maybe your application can also be realized with a different mounting variant allowing to attain the maximum thrust force
10	Permissible side load	Determine the lateral forces of your application and compare them to the permissible lateral forces (depending on the stroke)
11	Mounting type	Selection of ETT mounting accessories
12	Rod connection	Selection of the rod mounting type

Automated sizing can be done with the help of "ETTsizing" software tool to simplify the process: www.ettsizing.eu

Tel: +45 63 12 83 00 | Email: ps@hymatik.com | www.hymatik.com | Hvidkaervej 27a, DK-5250 Odense SV, Denmark

ETT Range Sizing

In order to simplify the representation, we assumed boundary conditions which must be adhered to without exception in your application, otherwise the product combinations suggested here might not work. In this case, the application must be dimensioned conventionally.
The following graphs show the combination of the maximum cycles per minute and maximum payload for each size of motor with the assumption of: Stroke 90 mm, Triangular profile, Cycle S3 – 5%, Without thrust force.

ETT025

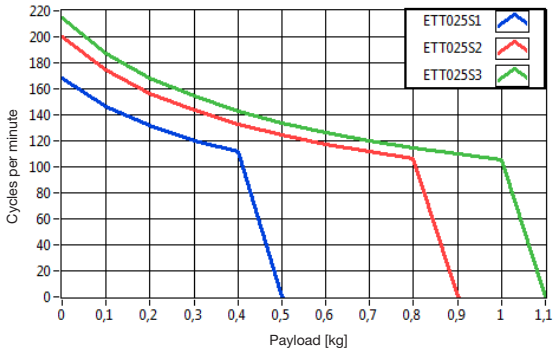

ETT032

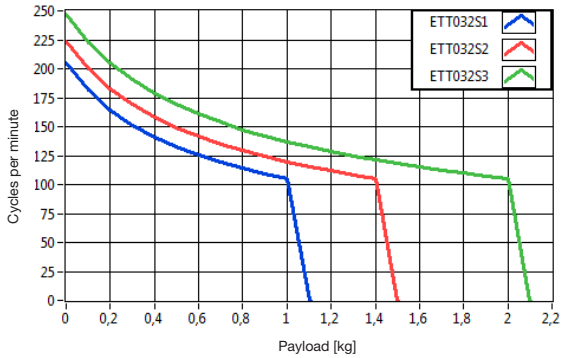

ETT050

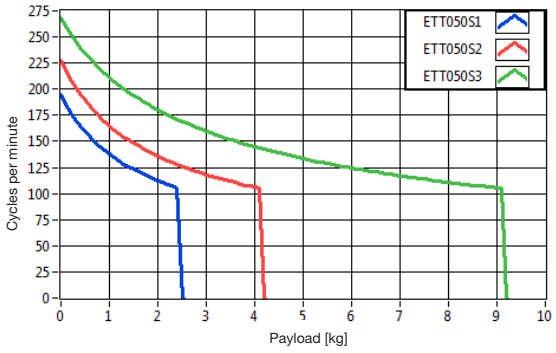

ETT080

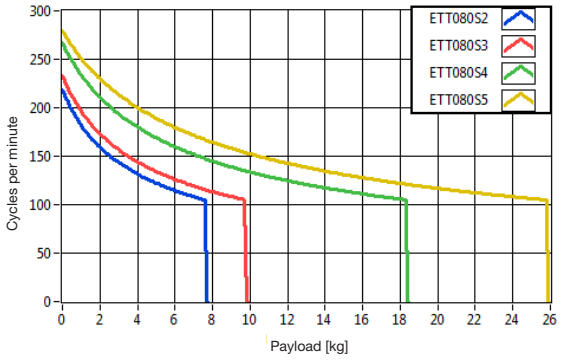

Tel: +45 63 12 83 00 | Email: ps@hymatik.com | www.hymatik.com | Hvidkaervej 27a, DK-5250 Odense SV, Denmark

Common Motion Profile Formulas

Triangular Profile 1/2, 1/2
Accelerate to speed and decelerate back to original speed or zero, rest and repeat the process as needed.

This is very simple and is common in applications such as Pick & Place.

Trapezoidal Profile
Accelerate to constant speed, travel at a costant speed and then decelerate back to original speed or zero. This is common in applications such as scanning inspection. There are two types, the 1/3 Trapezoidal Profile and the Variable Trapezoidal Profile.

Item	Symbol	Unit
Stroke	X	mm
Velocity	V	m/s
Acceleration time	T_a	s
Continuous time	T_b	s
Deceleration time	T_c	s
Settling time	T_s	s
Waiting time	T_w	s

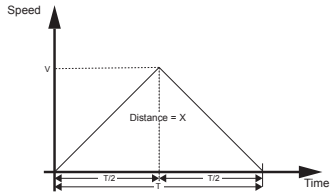

Solve for \ Have	X (m) T (sec)	V (m/sec) T (sec)	A (m/sec²) T (sec)	A (m/sec²) V (m/sec)
Distance X(m)		$X= (1/2) * V * T$	$X= (1/4) * A * T^2$	$X= (V^2/A)$
Velocity V (m/sec)	$V= 2* (X/T)$		$V= (A*T)/2$	$V= \sqrt{(A*X)}$
Acceleration A (m/sec²)	$A= 4* (X/T^2)$	$A= 2 * (V/T)$		$A= V^2/X$

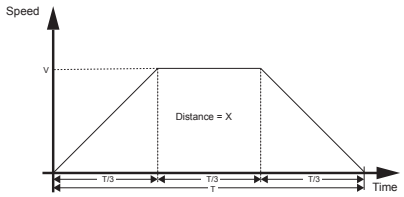

Solve for \ Have	X (m) T (sec)	V (m/sec) T (sec)	A (m/sec²) T (sec)	A (m/sec²) V (m/sec)
Distance X(m)		$X= (2/3) * V * T$	$X= (1/4.5)*A*T^2$	$X= 2 * (V^2/A)$
Velocity V (m/sec)	$V= 1.5 * (X/T)$		$V= (A*T)/3$	$V= \sqrt{(A*X)/2}$
Acceleration A (m/sec²)	$A= 4.5 * (X/T^2)$	$A= 3 * (V/T)$		$A= 2 * (V^2/X)$

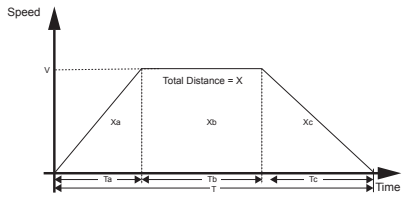

Solve for \ Have	X (m) T (sec)	V (m/sec) T (sec)	A (m/sec²) T (sec)	A (m/sec²) V (m/sec)
Distance X(m)		$X= V * T/2$	$X= (A*T^2)/2$	$X= V^2/(2 * A)$
Velocity V (m/sec)	$V= (2 * X)/T$		$V= A * T$	$V= \sqrt{(2 * A)/X}$
Acceleration A (m/sec²)	$A= (2 * X)/T^2$	$A= V/T$		$A= V^2/(2 * X)$

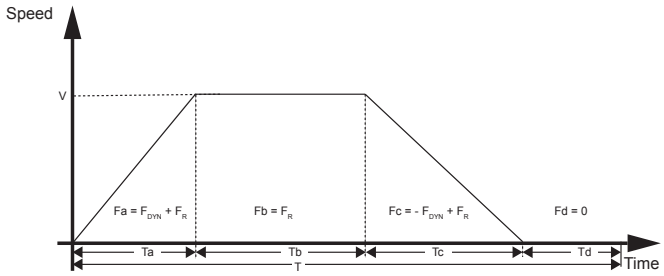

Force Formula	
Dynamic force	$F_{DYN} = m * a$
Friction force	$F_R = \mu * F_N$
Normal force	$F_N = \cos \alpha * F_G$
Gravity force	$F_G = m * g$

Item	Symbol	Unit
Gravity	g	9.81 m/s²
Friction coefficient	μ	
Moving mass	m	kg
Angle of the inclined surface	α	°
Acceleration time	Ta	s
Constant speed time	Tb	s
Deceleration time	Tc	s
Waiting time	Td	s

Peak force $F_{peak} = \max (F_a, F_b, F_c, F_d)$

RMS Force $F_{RMS} = \sqrt{\frac{Fa^2 * Ta + Fb^2 * Tb + Fc^2 * Tc + Fd^2 * Td}{Ta + Tb + Tc + Td}}$

Tel: +45 63 12 83 00 | Email: ps@hymatik.com | www.hymatik.com | Hvidkaervej 27a, DK-5250 Odense SV, Denmark

Servo Drives Products



Compact Servo Drive SLVD-N

SLVD-N is the family of compact digital servo drives for brushless motors. In addition to positioning applications with trapezoidal profile, electrical shaft, electronic cam, spindle orientation, simulator of stepper motor and torque control, it holds a PLC inside able to talk to the most common industrial programming systems, giving a great freedom of use of the inputs and outputs. It also allows the development of additional configurations to the basis features of the drive, such as gains adjustment of the loop in relation to speed or space, torque monitoring used for tools etc.

Model	Continuous current [A]	Peak current [A]	Size
SLVD1N	1.25	2.5	1
SLVD2N	2.5	5	
SLVD5N	5	10	
SLVD7N	7	14	
SLVD10N	10	20	2

Intelligent Servo Drive Compax 3

Compax3 is Parker Hannifin's global servo drive. The drive series includes single and multi axis drives as well as hydraulic controllers. It features a power range from 1 to 109 kVA.
The servo drives are developed and manufactured in Germany. As a global servo drive controller, Compax3 is available all over the world. Service and support sites are located in the vicinity of all major industry locations - worldwide. The “Parker Authorized Distribution Partners” play an important role in this context - well-trained and experienced application and support specialists will provide professional support in any situation.



Device	Current [A]		Supply Voltage	Power [kVA]
Compax3	$I_{cont.}$	I_{peak} (<5 s)		
S025V2	2.5	5.5	1 * 230/240 VAC	1,0
S063V2	6.3	12.6		2,5
S100V2	10	20	3 * 230/240 VAC	4,0
S150V2	15	30		6,0
S015V4	1.5	4.5	3 * 400/480 VAC	1.25
S038V4	3.8	9.0		3.1
S075V4	7.5	15		6.2

Software and Tools

MotionWiz and C3 Servo Manager configuration software are available to configure the SLVD-N and Compax3 system with just a few clicks. The software features an easy and"friendly" interface to speed up installation, optimisation and diagnostics procedures. To simplify configuration, the software shows a typical Windows® environment on the monitor with dialogue windows and toolbars.

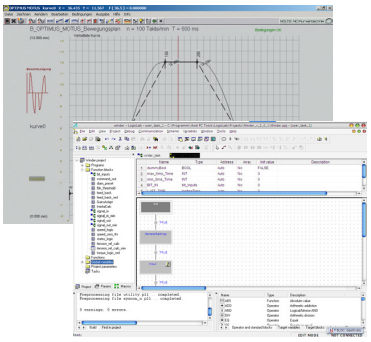

Tel: +45 63 12 83 00 | Email: ps@hymatik.com | www.hymatik.com | Hvidkaervej 27a, DK-5250 Odense SV, Denmark

Order Code

ETT Electric Tubular Motor (Complete Unit)

	1	2	3	4	5	6	7	8	9
Order example	**ETT**	**032**	**S1**	**CS**	**M**	**N**	**....**	**C**	

1	**Type**	
	ETT	Electric Tubular Motor
2	**Size**	
	025	ISO 6432 - Bore 25 mm
	032	ISO 6432 - Bore 32 mm
	050	ISO 6432 - Bore 50 mm
	080	ISO 6432 - Bore 80 mm
3	**Winding**	
	S1	Serial, Stack Length 1
	S2	Serial, Stack Length 2
	S3	Serial, Stack Length 3
	S4	Serial, Stack Length 4
	S5	Serial, Stack Length 5
4	**Connection and Feedback Type**	
	CS	Intercontec Connector (Springtec EEDA101NN00000002000) - Feedback Analogue SinCos 1 Vpp -
	CI	Intercontec Connector (Springtec EEDA101NN00000002000) - Feedback Incremental TTL
	CB	Intercontec Connector (Springtec EEDA101NN00000002000) - Feedback BISS-C
	1S	Flying leads, Length 1 m, rear output - Feedback Analogue SinCos 1 Vpp - Only ETT025
	2S	Flying leads, Length 2.5 m, rear output - Feedback Analogue SinCos 1 Vpp - Only ETT025
	5S	Flying leads, Length 5 m, rear output - Feedback Analogue SinCos 1 Vpp - Only ETT025
5	**Rod End Mounting - Front / Rear**	
	M	Male Thread / Cap End (M5 ETT025, M6 ETT032, M8 ETT050, M10 ETT080)
	F	Female Thread / Cap End (M5 ETT025, M6 ETT032, M8 ETT050, M10 ETT080)
	N	Male Thread / Male Thread (M5 ETT025, M6 ETT032, M8 ETT050, M10 ETT080)
	G	Female Thread / Female Thread (M5 ETT025, M6 ETT032, M8 ETT050, M10 ETT080)
	X	Special (Customized version - Please contact Parker)
6	**Fixed Field**	
	N	Fixed field
7	**Stroke**	
	.....	Stroke length is in mm, four digits.
	.....	Example 30cm=0300. See table pages
	.....	12,13,14,15 - column "Stroke".
8	**Protection Class**	
	C	IP67
9	**Customized Options**	
		Blank for standard motors

Tel: +45 63 12 83 00 | Email: ps@hymatik.com | www.hymatik.com | Hvidkaervej 27a, DK-5250 Odense SV, Denmark

ETT Electric Tubular Motor (Rod only)

	1	2	3	4	5
Order example	**ETT-R**	**032**	**M**	**....**	

1	**Type**	
	ETT-R	Electric Tubular Motor - Rod only
2	**Size**	
	025	ISO 6432 - size 25
	032	ISO 6432 - size 32
	050	ISO 6432 - size 50
	080	ISO 6432 - size 80
3	**Rod End Mounting - Front / Rear**	
	M	Male Thread / Cap End (M5 ETT025, M6 ETT032, M8 ETT050, M10 ETT080)
	F	Female Thread / Cap End (M5 ETT025, M6 ETT032, M8 ETT050, M10 ETT080)
	N	Male Thread / Male Thread (M5 ETT025, M6 ETT032, M8 ETT050, M10 ETT080)
	G	Female Thread / Female Thread (M5 ETT025, M6 ETT032, M8 ETT050, M10 ETT080)
	X	Special (Customized version - Please contact Parker)
4	**Length**	
	.....	Rod length is in mm, four digits. See tables pages 12,13,14,15 - column "Part Number Codification"
5	**Customized Options**	
		Blank for standard motors

Tel: +45 63 12 83 00 | Email: ps@hymatik.com | www.hymatik.com | Hvidkaervej 27a, DK-5250 Odense SV, Denmark

Order Code

ETT Electric Tubular Motor (Coil only)

	1	2	3	4	5	6	7
Order example	**ETT-C**	**032**	**S1**	**CS**	**N**	**C**	

1	**Type**	
	ETT-C	Electric Tubular Motor - Coil only
2	**Size**	
	025	ISO 6432 - Bore 25 mm
	032	ISO 6432 - Bore 32 mm
	050	ISO 6432 - Bore 50 mm
	080	ISO 6432 - Bore 80mm
3	**Winding**	
	S1	Serial, Stack Length 1
	S2	Serial, Stack Length 2
	S3	Serial, Stack Length 3
	S4	Serial, Stack Length 4
	S5	Serial, Stack Length 5
4	**Connection and Feedback Type**	
	CS	Intercontec Connector (Springtec EEDA101NN00000002000) - Feedback Analogue SinCos 1 Vpp -
	CI	Intercontec Connector (Springtec EEDA101NN00000002000) - Feedback Incremental TTL
	CB	Intercontec Connector (Springtec EEDA101NN00000002000) - Feedback BISS-C
	1S	Flying leads, Length 1 m, rear output - Feedback Analogue SinCos 1 Vpp - Only ETT025
	2S	Flying leads, Length 2.5 m, rear output - Feedback Analogue SinCos 1 Vpp - Only ETT025
	5S	Flying leads, Length 5 m, rear output - Feedback Analogue SinCos 1 Vpp - Only ETT025
5	**Fixed Field**	
	N	Fixed Field
6	**Protection Class**	
	C	IP67
7	**Customized Options**	
		Blank for standard motors

Tel: +45 63 12 83 00 | Email: ps@hymatik.com | www.hymatik.com | Hvidkaervej 27a, DK-5250 Odense SV, Denmark

ETT Motor and Signal Cable

	1	2	3	4		5	6		7
Order example	**ETT-CAP**	**X**	**003**	**PM**	**-**	**Y1**	**SL**	**-**	**00**

1	**Cable Type**	
	ETT-CAP	Power cable for ETT
	ETT-CAS	Signal cable for ETT
2	**Fixed Field**	
	X	Fixed field
3	**Cable Length**	
	001	1 m
	003	3 m
	005	5 m
	007	7 m
	010	10 m
	015	15 m
	020	20 m
4	**Application Type**	
	PM	High flex cable
5	**Connector**	
	Y1	Intercontec Y-TECH Connector
	I1	Intercontec M23 Connector
	X	Special Execution
6	**Drive Type**	
	SL	SLVD-N Drive
	C3	Compax3
	63	638 Drive
	IP	IPA Drive
7	**Option**	
	00	No special option
		Special customer drawing

Tel: +45 63 12 83 00 | Email: ps@hymatik.com | www.hymatik.com | Hvidkaervej 27a, DK-5250 Odense SV, Denmark

Tel: +45 63 12 83 00 | Email: ps@hymatik.com | www.hymatik.com | Hvidkaervej 27a, DK-5250 Odense SV, Denmark

Parker's Motion & Control Technologies

At Parker, we're guided by a relentless drive to help our customers become more productive and achieve higher levels of profitability by engineering the best systems for their requirements. It means looking at customer applications from many angles to find new ways to create value. Whatever the motion and control technology need, Parker has the experience, breadth of product and global reach to consistently deliver. No company knows more about motion and control technology than Parker. For further info call 00800 27 27 5374



Aerospace

Key Markets

Aftermarket services
Commercial transports
Engines
General & business aviation
Helicopters
Launch vehicles
Military aircraft
Missiles
Power generation
Regional transports
Unmanned aerial vehicles

Key Products

Control systems & actuation products
Engine systems & components
Fluid conveyance systems & components
Fluid metering, delivery & atomization devices
Fuel systems & components
Fuel tank inerting systems
Hydraulic systems & components
Thermal management
Wheels & brakes



Climate Control

Key Markets

Agriculture
Air conditioning
Construction Machinery
Food & beverage
Industrial machinery
Life sciences
Oil & gas
Precision cooling
Process
Refrigeration
Transportation

Key Products

Accumulators
Advanced actuators
CO_2 controls
Electronic controllers
Filter driers
Hand shut-off valves
Heat exchangers
Hose & fittings
Pressure regulating valves
Refrigerant distributors
Safety relief valves
Smart pumps
Solenoid valves
Thermostatic expansion valves

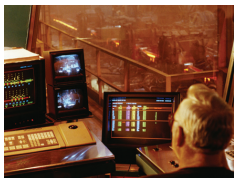

Electromechanical

Key Markets

Aerospace
Factory automation
Life science & medical
Machine tools
Packaging machinery
Paper machinery
Plastics machinery & converting
Primary metals
Semiconductor & electronics
Textile
Wire & cable

Key Products

AC/DC drives & systems
Electric actuators, gantry robots & slides
Electrohydrostatic actuation systems
Electromechanical actuation systems
Human machine interface
Linear motors
Stepper motors, servo motors, drives & controls
Structural extrusions



Filtration

Key Markets

Aerospace
Food & beverage
Industrial plant & equipment
Life sciences
Marine
Mobile equipment
Oil & gas
Power generation & renewable energy
Process
Transportation
Water Purification

Key Products

Analytical gas generators
Compressed air filters & dryers
Engine air, coolant, fuel & oil filtration systems
Fluid condition monitoring systems
Hydraulic & lubrication filters
Hydrogen, nitrogen & zero air generators
Instrumentation filters
Membrane & fiber filters
Microfiltration
Sterile air filtration
Water desalination & purification filters & systems



Fluid & Gas Handling

Key Markets

Aerial lift
Agriculture
Bulk chemical handling
Construction machinery
Food & beverage
Fuel & gas delivery
Industrial machinery
Life sciences
Marine
Mining
Mobile
Oil & gas
Renewable energy
Transportation

Key Products

Check valves
Connectors for low pressure fluid conveyance
Deep sea umbilicals
Diagnostic equipment
Hose couplings
Industrial hose
Mooring systems & power cables
PTFE hose & tubing
Quick couplings
Rubber & thermoplastic hose
Tube fittings & adapters
Tubing & plastic fittings



Hydraulics

Key Markets

Aerial lift
Agriculture
Alternative energy
Construction machinery
Forestry
Industrial machinery
Machine tools
Marine
Material handling
Mining
Oil & gas
Power generation
Refuse vehicles
Renewable energy
Truck hydraulics
Turf equipment

Key Products

Accumulators
Cartridge valves
Electrohydraulic actuators
Human machine interfaces
Hybrid drives
Hydraulic cylinders
Hydraulic motors & pumps
Hydraulic systems
Hydraulic valves & controls
Hydrostatic steering
Integrated hydraulic circuits
Power take-offs
Power units
Rotary actuators
Sensors



Pneumatics

Key Markets

Aerospace
Conveyor & material handling
Factory automation
Life science & medical
Machine tools
Packaging machinery
Transportation & automotive

Key Products

Air preparation
Brass fittings & valves
Manifolds
Pneumatic accessories
Pneumatic actuators & grippers
Pneumatic valves & controls
Quick disconnects
Rotary actuators
Rubber & thermoplastic hose & couplings
Structural extrusions
Thermoplastic tubing & fittings
Vacuum generators, cups & sensors



Process Control

Key Markets

Alternative fuels
Biopharmaceuticals
Chemical & refining
Food & beverage
Marine & shipbuilding
Medical & dental
Microelectronics
Nuclear Power
Offshore oil exploration
Oil & gas
Pharmaceuticals
Power generation
Pulp & paper
Steel
Water/wastewater

Key Products

Analytical Instruments
Analytical sample conditioning products & systems
Chemical injection fittings & valves
Fluoropolymer chemical delivery fittings, valves & pumps
High purity gas delivery fittings, valves, regulators & digital flow controllers
Industrial mass flow meters/controllers
Permanent no-weld tube fittings
Precision industrial regulators & flow controllers
Process control double block & bleeds
Process control fittings, valves, regulators & manifold valves



Sealing & Shielding

Key Markets

Aerospace
Chemical processing
Consumer
Fluid power
General industrial
Information technology
Life sciences
Microelectronics
Military
Oil & gas
Power generation
Renewable energy
Telecommunications
Transportation

Key Products

Dynamic seals
Elastomeric o-rings
Electro-medical instrument design & assembly
EMI shielding
Extruded & precision-cut, fabricated elastomeric seals
High temperature metal seals
Homogeneous & inserted elastomeric shapes
Medical device fabrication & assembly
Metal & plastic retained composite seals
Shielded optical windows
Silicone tubing & extrusions
Thermal management
Vibration dampening

Parker Worldwide

Europe, Middle East, Africa

AE – United Arab Emirates, Dubai
Tel: +971 4 8127100
parker.me@parker.com

AT – Austria, Wiener Neustadt
Tel: +43 (0)2622 23501-0
parker.austria@parker.com

AT – Eastern Europe, Wiener Neustadt
Tel: +43 (0)2622 23501 900
parker.easteurope@parker.com

AZ – Azerbaijan, Baku
Tel: +994 50 2233 458
parker.azerbaijan@parker.com

BE/LU – Belgium, Nivelles
Tel: +32 (0)67 280 900
parker.belgium@parker.com

BG – Bulgaria, Sofia
Tel: +359 2 980 1344
parker.bulgaria@parker.com

BY – Belarus, Minsk
Tel: +48 (0)22 573 24 00
parker.poland@parker.com

CH – Switzerland, Etoy
Tel: +41 (0)21 821 87 00
parker.switzerland@parker.com

CZ – Czech Republic, Klecany
Tel: +420 284 083 111
parker.czechrepublic@parker.com

DE – Germany, Kaarst
Tel: +49 (0)2131 4016 0
parker.germany@parker.com

DK – Denmark, Ballerup
Tel: +45 43 56 04 00
parker.denmark@parker.com

ES – Spain, Madrid
Tel: +34 902 330 001
parker.spain@parker.com

FI – Finland, Vantaa
Tel: +358 (0)20 753 2500
parker.finland@parker.com

FR – France, Contamine s/Arve
Tel: +33 (0)4 50 25 80 25
parker.france@parker.com

GR – Greece, Athens
Tel: +30 210 933 6450
parker.greece@parker.com

HU – Hungary, Budaörs
Tel: +36 23 885 470
parker.hungary@parker.com

IE – Ireland, Dublin
Tel: +353 (0)1 466 6370
parker.ireland@parker.com

IT – Italy, Corsico (MI)
Tel: +39 02 45 19 21
parker.italy@parker.com

KZ – Kazakhstan, Almaty
Tel: +7 7273 561 000
parker.easteurope@parker.com

NL – The Netherlands, Oldenzaal
Tel: +31 (0)541 585 000
parker.nl@parker.com

NO – Norway, Asker
Tel: +47 66 75 34 00
parker.norway@parker.com

PL – Poland, Warsaw
Tel: +48 (0)22 573 24 00
parker.poland@parker.com

PT – Portugal, Leca da Palmeira
Tel: +351 22 999 7360
parker.portugal@parker.com

RO – Romania, Bucharest
Tel: +40 21 252 1382
parker.romania@parker.com

RU – Russia, Moscow
Tel: +7 495 645-2156
parker.russia@parker.com

SE – Sweden, Spånga
Tel: +46 (0)8 59 79 50 00
parker.sweden@parker.com

SK – Slovakia, Banská Bystrica
Tel: +421 484 162 252
parker.slovakia@parker.com

SL – Slovenia, Novo Mesto
Tel: +386 7 337 6650
parker.slovenia@parker.com

TR – Turkey, Istanbul
Tel: +90 216 4997081
parker.turkey@parker.com

UA – Ukraine, Kiev
Tel: +48 (0)22 573 24 00
parker.poland@parker.com

UK – United Kingdom, Warwick
Tel: +44 (0)1926 317 878
parker.uk@parker.com

ZA – South Africa, Kempton Park
Tel: +27 (0)11 961 0700
parker.southafrica@parker.com

North America

CA – Canada, Milton, Ontario
Tel: +1 905 693 3000

US – USA, Cleveland
Tel: +1 216 896 3000

Asia Pacific

AU – Australia, Castle Hill
Tel: +61 (0)2-9634 7777

CN – China, Shanghai
Tel: +86 21 2899 5000

HK – Hong Kong
Tel: +852 2428 8008

IN – India, Mumbai
Tel: +91 22 6513 7081-85

JP – Japan, Tokyo
Tel: +81 (0)3 6408 3901

KR – South Korea, Seoul
Tel: +82 2 559 0400

MY – Malaysia, Shah Alam
Tel: +60 3 7849 0800

NZ – New Zealand, Mt Wellington
Tel: +64 9 574 1744

SG – Singapore
Tel: +65 6887 6300

TH – Thailand, Bangkok
Tel: +662 186 7000

TW – Taiwan, Taipei
Tel: +886 2 2298 8987

South America

AR – Argentina, Buenos Aires
Tel: +54 3327 44 4129

BR – Brazil, Sao Jose dos Campos
Tel: +55 800 727 5374

CL – Chile, Santiago
Tel: +56 2 623 1216

MX – Mexico, Toluca
Tel: +52 72 2275 4200

We reserve the right to make technical changes. The data correspond to the technical state at the time of printing.
© 2015 Parker Hannifin Corporation.
All rights reserved.

192-571001N4 June 2015

EMEA Product Information Centre
Free phone: 00 800 27 27 5374
(from AT, BE, CH, CZ, DE, DK, EE, ES, FI, FR, IE, IL, IS, IT, LU, MT, NL, NO, PL, PT, RU, SE, SK, UK, ZA)

US Product Information Centre
Toll-free number: 1-800-27 27 537

www.parker.com

Your local authorized Parker distributor