hymatik





aerospace
climate control
electromechanical
filtration
fluid & gas handling
hydraulics
pneumatics
process control
sealing & shielding





Condition Monitoring

Products & Custom Solutions



Parker

ENGINEERING YOUR SUCCESS.

Tel: +45 63 12 83 00 | Email: ps@hymatik.com | www.hymatik.com | Hvidkaervej 27a, DK-5250 Odense SV, Denmark

The Parker Hannifin Filtration Group assures:

- Consistent quality
- Technical innovation
- Premier customer service

Parker's technical resources provide the right filtration technologies that conform to your requirements. That's why thousands of manufacturers and equipment users around the world rely on Parker Filtration products and people.

Worldwide Sales and Service

Parker operates sales and service centers in major industrial areas worldwide. Call 1-800-C-PARKER for more information and for a synopsis of our Filtration Technology Textbook.

Hydraulic, Lubrication & Coolant Filtration
High-performance filtration systems for production machinery in industrial, mobile and military/marine.

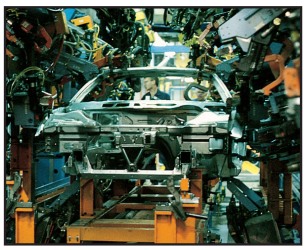

Compressed Air & Gas Filtration
Complete line of compressed air/gas filtration products; coalescing, particulate and adsorption filters in many applications in many industries.

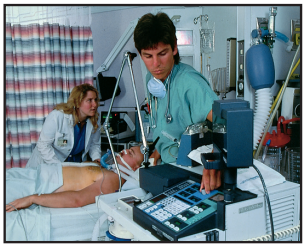

Process & Chemical Fluid Filtration
Liquid filtration systems for beverage, chemical and food processing; cosmetic, paint, water treatment; photo-processing; and micro-chip fabrication.



Fuel Conditioning & Filtration
Parker air, fuel and oil filtration systems provide quality protection for engines operating in any environment, anywhere in the world.



Legal Notifications

WARNING

FAILURE OR IMPROPER SELECTION OR IMPROPER USE OF THE PRODUCTS AND/OR SYSTEMS DESCRIBED HEREIN OR RELATED ITEMS CAN CAUSE DEATH, PERSONAL INJURY AND PROPERTY DAMAGE.

This document and other information from Parker Hannifin Corporation, its subsidiaries and authorized distributors provide product and/or system options for further investigation by users having technical expertise. It is important that you analyze all aspects of your application and review the information concerning the product or system in the current product catalog. Due to the variety of operating conditions and applications for these products or systems, the user, through its own analysis and testing, is solely responsible for making the final selection of the products and systems and assuring that all performance, safety and warning requirements of the application are met.

The products described herein, including without limitation, product features, specifications, designs, availability and pricing, are subject to change by Parker Hannifin Corporation and its subsidiaries at any time without notice.

Offer of Sale

The items described in this document are hereby offered for sale by Parker Hannifin Corporation, its subsidiaries or its authorized distributors. This offer and its acceptance are governed by the provisions stated in the "Offer of Sale".

© Copyright 2014, Parker Hannifin Corporation, All Rights Reserved.

Content

icountLCM20 Contamination Monitor..... 1
icountACM20 Lab Unit..... 6
Universal Bottle Sampler..... 9
icountSBSBottle Sampler.....13
Single Point Sampler..... 19
System 20 Sensors and Monitors.....22
icountPD and icountPDZ..... 27
icountOS.....36
Moisture Sensor Range..... 47
Oilcheck Monitor..... 53
ANALEXfdMplus.....57
DIGI Field Kit 58
Low Range DIGI Water Kit.....59
Heated Viscometer.....60
MHC Bearing Checker.....61
Guide to Contamination Standards.....62
Offer of Sale.....67

Introduction

Parker Hannifin is comprised of eight global groups: Aerospace, Climate & Industrial Controls, Fluid Connectors, Seal, Hydraulics, Filtration, Automation and Instrumentation.

The Filtration Group consists of ten technical sales and service locations: Finite Filter, Hydraulic Filter Division North America, Hydraulic Filter Division Europe (two locations), Process Filter, Racor, Parker Hannifin Brazil and Parker Hannifin Korea.

Customer Support Information

Technical Support You Can Count On
Parker's technical resources assure you of the right filtration technologies, advanced designs, consistent manufacturing and a network of helpful, specialized professionals trained to support your team.

We listen to you; then we design the right filtration solution. Parker holds over 150 patents on innovative filtration products, including filtration membranes, differential pressure indicators, cartridge bypass valves and spin-in elements.

Parker Filtration makes the technological investments needed to assure the highest quality products. Examples are modern clean rooms, sophisticated testing equipment, CAD/CAM engineering, and CNC integrated equipment that is helping us design tomorrow's filtration products today.

Quality Is Top Priority
Parker Filtration has had a total quality management system in place for years, as well as a Director of Corporate Quality for all of Parker. This structure helps us continually meet our customers' expectations for the highest technical standards, reliable supply and responsive service. From the Group President on down, "Quality" at Parker means more than making a product the right way. Quality permeates our whole organization so that every employee thinks about what he or she does and what is expected by our customers.

"Always Available" Customer Service



Parker Filtration distributors provide local stock and technical design help including 24-hour emergency service. They are further supported by our "ever ready" manufacturing teams.

So if you need more technical literature or applications support please call us toll free at 1-800-253-1258 or at our 24 hour corporate help line at **1-800-C-PARKER.**

Parker Hannifin Corporation
Hydraulic Filter Division
16810 Fulton County Road #2
Metamora, OH 43540
Toll Free: (800) 253-1258
Phone: (419) 644-4311
Fax: (419) 644-6205
http://www.parker.com/hydraulicfilter

icountLCM20

Fluid Condition Monitoring
Portable Particle Monitor



Typical Applications

- Construction machinery
- Industrial plant
- Hydraulic equipment & system manufacturers
- Research & testing institutes
- Offshore & power generation
- Marine
- Military equipment applications

icountLCM20 is a proven answer to fluid system contamination monitoring. Multi-standard ISO and NAS cleanliness reporting, data entry, data graphing and integral printing are all standard on this world proven contamination monitor.

Automatic Particle Counters (APC), have been widely used for many years in condition monitoring of hydraulic fluids. However, it is only recently that APCs have become flexible enough to enable the instruments to be taken out of the laboratory and used on-line in order to obtain the most credible form of results.

Unusually, the move from fixed laboratory use, to portable field use has not been at the expense of accuracy or user flexibility, but has actually enabled the instruments to be used over a wider range of applications and situations.

The most common monitoring technique used in APCs is that of light obscuration or light blockage. Here, a focused light source is projected through a moving column of oil, (in which the contaminants being measured are contained), causing an image of the contaminant to be projected on to a photo diode cell, (changing light intensity to an electrical output).

The electrical output of the photo diode cell will vary in accordance with the size of the particles contained in the column of oil; the larger the particle, the bigger the change in the photo diode electrical output.

On-line APCs must be able to test the oil sample at whatever cleanliness it is delivered to the machine. Parker therefore had to develop technology to ensure the on-line APC was able to test a sample without the conventional laboratory technique which requires dilution - a practice that would have been simply impossible with a portable unit.

By careful design and window sizing, 40,000 particles per ml can be achieved without making the instrument susceptible to counter saturation.

Tel: +45 63 12 83 00 | Email: ps@hymatik.com | www.hymatik.com | Hvidkaervej 27a, DK-5250 Odense SV, Denmark

icountLCM20

Features & Benefits

Test time	2 minutes
Particle counts	MTD 4+, 6+, 14+, 21+, 38+ and 70+ microns(c) ACFTD 2+, 5+, 15+, 25+, 50+ and 100+ microns
International codes	ISO 7-22, NAS 0-12
Data retrieval	Memory access gives test search facility
Max. working pressure	6000 psi (420 bar)
Max. flow rate	106 gpm (400 lpm) when used with system 20 Sensors. Higher with single point sampler
Working conditions	LCM will operate with the system working normally
Computer compatibility	Interface via RS232 connection @ 9600 baud rate.

- Special 'diagnostics' are incorporated into the icountLCM microprocessor control to ensure effective testing.
- Routine contamination monitoring of oil systems with icountLCM saves time and saves money.
- Contamination monitoring is now possible during application operation - icountLCM saves on production downtime.
- Data entry allows individual equipment test log details to be recorded.
- Data retrieval of test results from memory via hand set display.
- Automatic test cycle logging of up to 300 tests can be selected via hand set display.
- Totally portable, can be used as easily in the field as in the laboratory.
- Automatic calibration reminder.
- Instant, accurate results achieved with a 2 minute test cycle.
- Data entry allows individual equipment footprint record.
- Data graphing selectable via the integral printer.
- Auto 300-test cycle logging via LCD handset input.
- RS232 to USB computer interface.
- Limit level output to control peripheral equipment such as off-line filtration via internal relay limit switches.
- Auto-testing allows for the conducting of automatic sequencing tests on flushing systems for example.
- Memory access gives search facility.
- Worldwide service and technical support.
- Re-calibration - Annual certification by an approved Parker Service Center.



Tel: +45 63 12 83 00 | Email: ps@hymatik.com | www.hymatik.com | Hvidkaervej 27a, DK-5250 Odense SV, Denmark

icountLCM20

Specifications

Description	LCM20.2022	LCM20.2062
ABS structural foam and injection molded case	•	•
ABS handheld display	•	•
Mechanical composition – Brass, plated steel, stainless steel and aluminium	•	•
Fluorocarbon seals	•	
Perfluoroelastomer seals		•
Nylon hoses (kevlar braided microbore)	•	•
Stainless steel armoured hose ends	•	•
4 ft (1.2m) fluid connection hose	•	•
Rechargeable battery pack	•	•
12Vdc power supply	•	•
Fast blow fuse	•	•
Unique optical scanning system	•	•
Bonded glass optical window enclosed in SS plate	•	•
Micron channels analysis to 5 measured channels and the sixth channel is calculated.	•	•
Analysis range ISO 7 to 22 incl. (NAS 0 to 12)	•	•
32 character dot matrix LCD. Alpha numeric keypad	•	•
Data retrieval	•	•
Calibration - see note below	•	•
Viscosity range 2 to 100 cSt. 500 cSt.with SPS	•	•
Operating temp. 41°F to 176°F (+5°C to +80°C)	•	•
Ambient temp. 41°F to 104°F (+5°C to +40°C)	•	•
2 minute test completion time	•	•
Memory store – 300 test memory	•	•
Battery operated 6 x 1.5 D cells	•	•
Phosphate Ester group compatibility		•
Mineral oil & petroleum based fluid compatibility	•	•
Up to 6000 psi (420 bar)	•	•
Integral 16 column printer	•	•
RS232 to USB computer interface		
Astra board case weight – lb (Kg)	11 (5)	11 (5)
Unit weight – lb (Kg)	17.6 (8)	17.6 (8)
ParSmart software and cable link pack	•	•
Weather protector cover	•	
CE certified	•	•
Auto logging	•	•

The LCM and calibration master sample the same particle distribution suspension.
The LCM is calibrated to the master to meet specification at the measured points.
MTD – instrument calibrated using MTD reference material.
ACFTD – instrument calibrated using ACFTD reference material.
Consult Parker for recalibration.

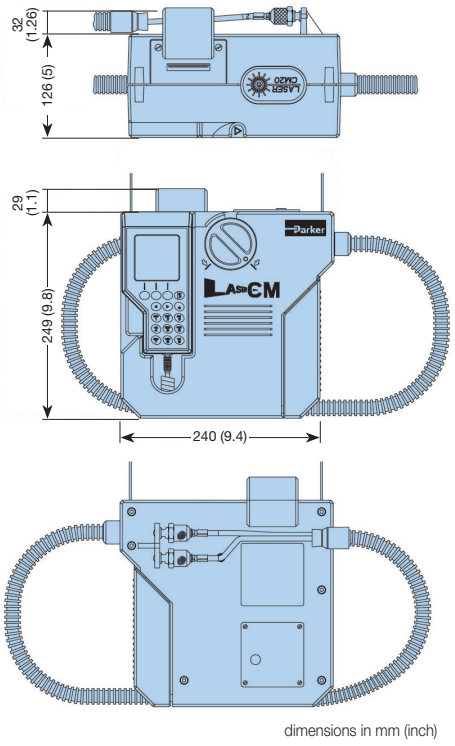

dimensions in mm (inch)

Accessory Kit - icountLCM Classic

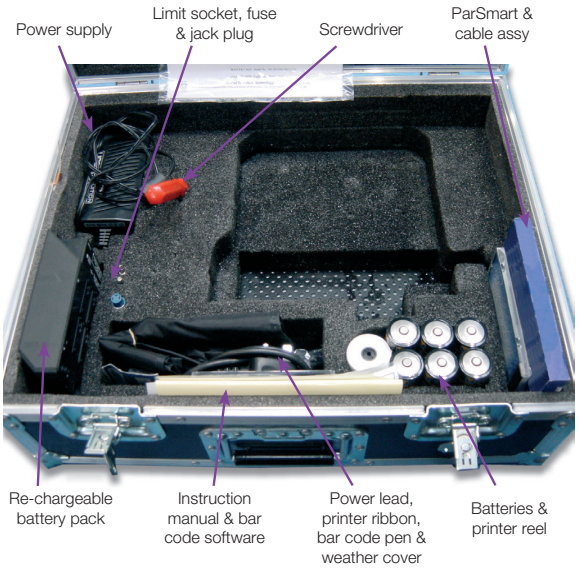

Tel: +45 63 12 83 00 | Email: ps@hymatik.com | www.hymatik.com | Hvidkaervej 27a, DK-5250 Odense SV, Denmark

icountLCM20

icountLCM Proven Core technology

The icountLCM portable particle monitor features microprocessor controlled optical scanning for accurate contaminant measurement with a calibration range from ISO 7 to ISO 22 with no counter saturation.

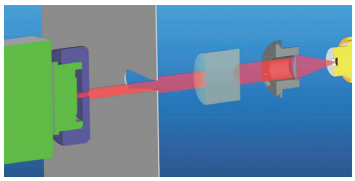

Laser Optical Sensing

How does icountLCM work?

- The particles are measured by a photo diode that converts light intensity to a voltage output which is recorded against time.
- As the particle moves across the window the amount of light lost is proportional to the size of the particle. This reduction in voltage is measured and recorded.
- This reduction in voltage relates directly to the area of the particle measured.
- This value is counted and stored in the icountLCM computer in one of 5 measured channels according to particle size.
- Readouts are displayed on the hand-held LCD in the accepted ISO and NAS standards ready for hard copy printing or RS232 computer download.
- The on-board computer allows storage of up to 300 test results.



A focused light source is projected through a moving column of oil.

Why On-Site Fluid Contamination Monitoring?

- Certification of fluid cleanliness levels.
- Early warning instrument to help prevent catastrophic failure in critical systems.
- Immediate results with laboratory accuracy.
- To comply with customer cleanliness requirements and specifications.
- New equipment warranty compliance.
- New oil cleanliness testing.

Data Download Management

Dedicated software, provides the link between an icountLCM20 and your computer management system.

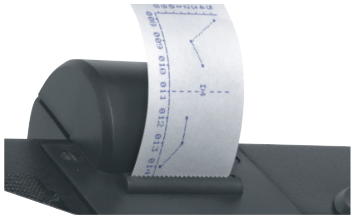

16-column printer for hard copy data. A feature of the icountLCM is the on-board printout data graphing option developed to support predictive maintenance procedures.

icountLCM Test

ON LINE TEST

TEST NUMBER 022

	D M Y
Date	04-03-10
Time	15-52
ISO:	20/15/09

Count / 100ml

>4µ (c)	820721
>6µ (c)	31564
>14µ (c)	314
>21µ (c)	64
>38µ (c)	14
>70µ (c)	0

NOTES

ISO 4406 - 1999

icountLCM Test

ON LINE TEST

TEST NUMBER 022

	D M Y
Date	04-03-10
Time	15-52
NAS CLASS:	7

Count / 100ml

4/6µ (c)	789157
6/14µ (c)	31250
NAS CLASS	7
14/21µ (c)	250
NAS CLASS	3
21/38µ (c)	50
NAS CLASS	3
38/70µ (c)	14
NAS CLASS	4
>70µ (c)	0
NAS CLASS	0

NOTES

Correlation to NAS 1638

Tel: +45 63 12 83 00 | Email: ps@hymatik.com | www.hymatik.com | Hvidkaervej 27a, DK-5250 Odense SV, Denmark

icountLCM20

Ordering Information

Model	Fluid Type		Options	
LCM2020	2	Hydraulic Mineral	1	icountLCM20 (ACFTD calibrated)
	6	Skydrol	2	icountLCM20 (MTD calibrated)

Part Number	Supercedes	Description
ACC6NE015	B84702	Printer roll x 5
ACC6NE014	P.843702	Printer Ribbon
ACC6NE013	B84609	Re-chargeable battery pack
ACC6ND002	P849603	Weather protector cover
ACC6ND000	B84703	USB to RS232 download cable

Tel: +45 63 12 83 00 | Email: ps@hymatik.com | www.hymatik.com | Hvidkaervej 27a, DK-5250 Odense SV, Denmark

icountACM20

Aviation/Diesel Fuel Condition Monitoring Lab Unit
State-of-the-Art Fuel Contamination Monitoring



The icountACM20 Portable Particle Counter was developed from existing technology for monitoring contamination in AVTur and other hydrocarbon fuels, in accordance with Energy Institute (EI) Method IP 564.

In addition, the ACM can also be used to monitor fuels from existing sampling points in locations from refineries, pipelines, distribution terminals, fuel supply storage.

Features and Benefits

- 2 minutes test time
- Optical scanning analysis and measurement of actual particles and inference to water presence
- Primary outputs: 4, 6, 14, 21, 25, 30µ counts per ml
- % Volume distribution, via graphical display on handset and printout
- ISO 7-22 in accordance with ISO 4406-1999
- 32 Character two line dot matrix LCD. Full alphanumeric entry facility on keypad
- Access up to 300 saved test
- The instrument shall be certified as being calibrated with a working standard test dust suspension verified against an ISO 11171 secondary calibrated master APC.
- Re-calibration every 12 months by a dedicated Parker Service Center
- 420 bar Max. Working Pressure
- +5° C to +80° C
- Interface via RS232 (USB serial cable to RS232 option available)
- On-board rear mounted pump for lab sampling
- On-board battery and carry case with wheels (13 kg total weight)
- 12v DC input, 6 “D” cell batteries or rechargeable battery pack
- Integrated 16 column printer for hard copy data
- Complies with all relevant EC declarations of conformity
- Integrated Mounted Pump:
  - Powered directly from ACM20
  - Direct sampling from fuel sample bottles or tank via 3 meter inlet suction tube
  - Incorporated double speed flush and test sequence
  - Managed flow rate/correct volume sample as per IP 564 test method

Applications

- Fuel Testing Laboratories - DEFSTAN 91-91 Issue 6
- Distribution Terminals/Hubs: use on receipt and outbound supply. Also provide checks for filtration performance, tank cleanliness and product quality
- Storage: reduce settling time by monitoring to determine if dispersed contamination are below acceptable levels
- Airport Fuel Farm: monitoring of fuels into storage, through fuel farm, hydrant system and during uplift into wing
- Oil and Gas Platforms: monitor filtration performance, system cleanliness and quality of delivered product



Tel: +45 63 12 83 00 | Email: ps@hymatik.com | www.hymatik.com | Hvidkaervej 27a, DK-5250 Odense SV, Denmark

icountACM20

Specifications

- **Construction:** ABS structural foam and injection moulded case
  Hand-held display - ABS
  Keypad flurosilicone rubber
- **Mechanical Components:** Brass, plated steel, stainless steel and aluminium
- **Seals:** Fluorocarbon
- **Hoses:** Nylon (Kevlar braided microbore). Stainless steel armoured ends
- **Flow Rate:** 25 - 28ml/min (dictated by CMP) 100ml/min with additional flush button
- **Fluid Compatability:** Hydrocarbon Fuel, Mineral Oil. For other fluids consult Parker
- **Fuse:** 1.25 amp fast blow fuse included for overload protection (spare supplied)
- **icountACM20 Technology:** Patented flow cell, light obscuration
- **Coincidence:** 40,000 particles per ml
- **Viscosity Range:** 1 -100 centistokes
- **icountACM20 Weight:** 17.6 lbs.
- **Monitor Carrying Case:** Astra Board case
- **Carrying Case Weight:** 11 lbs.

icountACM20 - Rear View

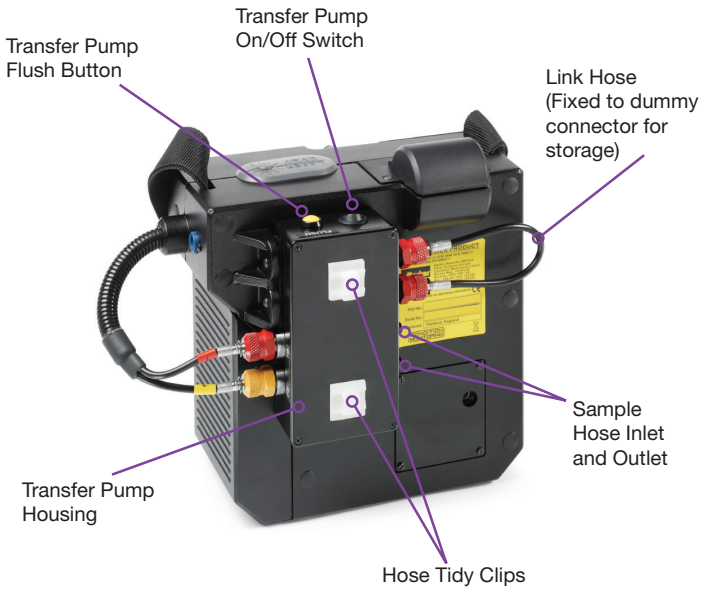

Input Power Socket (note that you will have to remove the plastic dust cap to access the 12Vdc power socket)

A fast blow 1.25A fuse and the RS232 connection are located behind the removable cover plate. The RS232 interface is provided to download all test data stored in the instrument.



Field Monitoring

For use in non-hazardous areas, the icountACM20 is designed for online sampling of hydrocarbon fuels, utilizing existing “quick connect” sampling points such as the Millipore Adaptor.

Tel: +45 63 12 83 00 | Email: ps@hymatik.com | www.hymatik.com | Hvidkaervej 27a, DK-5250 Odense SV, Denmark

icountACM20

Part Number	Description	
ACM202024US ACM202024UK ACM202024EU	icountACM20 Portable Particle Counter with US,UK or EU Plug	
ACC6NE008	UK Power Supply	
ACC6NE009	EUR Power Supply	
ACC6NE010	US Power Supply	
ACC6ND000	1m Process Cable Assembly	
ACC6NE027	2m Process Cable Assembly	
ACC6NE029	Throttle Kit	
ACC6NE015	Printer Paper 5 Rolls	
SERMISC067	500ml Verification Fluid	

Part Number	Description	
ACC6NE023	UK Battery Charger	
ACC6NE024	EUR Battery Charger	
ACC6NE025	US Battery Charger	
ACC6NW003	Waste Bottle	
ACC6NE013	Re-Chargeable Battery Pack Assembly	
ACC6NE006	Downloadable Software	
ACC6NE019	Carrying Case for ACM202024	
ACC6NE028	Carrying Case for ACM202032	
ACC6NW003	Vapor/Waste Bottle	
ACC6NE014	Printer Ribbon	

Tel: +45 63 12 83 00 | Email: ps@hymatik.com | www.hymatik.com | Hvidkaervej 27a, DK-5250 Odense SV, Denmark

Universal Bottle Sampler

Simple and efficient offline oil sampling



Ideal for batch oil sampling

The UBS provides the dynamic link to portable particle counters. The UBS off-line sampler has microprocessor technology to recognize and adjust to the connecting monitor including the icountLCM20.



Product Features

- Simple operation
- Efficient testing procedure
- Clean and contamination free sampling
- Available for both mineral based and aggressive fluids
- Further advances the LCM20's flexibility into laboratory bottle sampling environments
- Can accept various different sized bottles
- Minimal working parts
- Internal auto setting fuse for overload protection
- Simple maintenance procedures

Tel: +45 63 12 83 00 | Email: ps@hymatik.com | www.hymatik.com | Hvidkaervej 27a, DK-5250 Odense SV, Denmark

Universal Bottle Sampler

Specifications

Description	UBS Offline
Viscosity range 2 to 250 cSt	X
Operating temp. 41°F to 176°F (+5°C to +80°C)	X
Test time 2m15s / 4m15s (Flush 2m)	X
12 Vdc power supply	X
Extruded aluminium construction	X
Unit weight - (lb.)	8.82
Mineral oil and petroleum based compatibility	Fluorocarbon seal
Phosphate Ester group compatibility	EPDM seals
CE certified	X
Military approved	X
Manual operation	X
Bottle pack	X
De-gassing chamber	X
Manual	X
Sample tube pack	X
Interface cable to LCM20	X

Installation Details

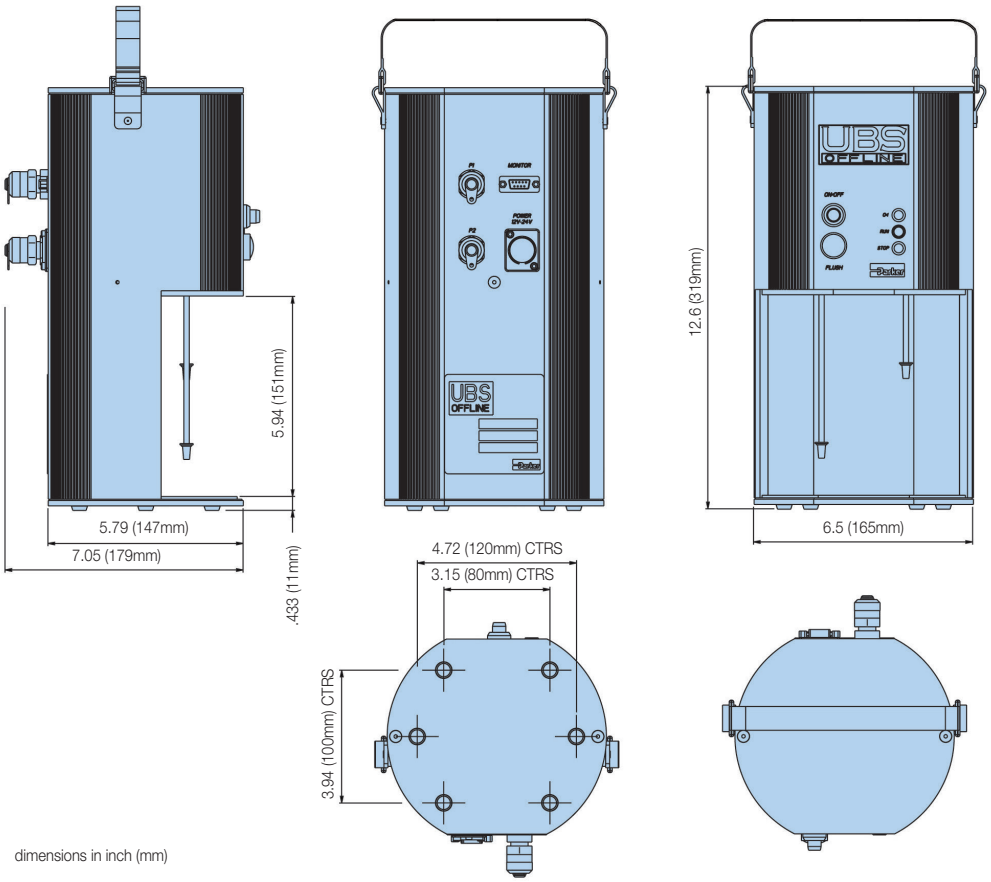

dimensions in inch (mm)

Tel: +45 63 12 83 00 | Email: ps@hymatik.com | www.hymatik.com | Hvidkaervej 27a, DK-5250 Odense SV, Denmark

Universal Bottle Sampler

Simple and Efficient Offline Oil Sampling

System Flow Rate

Samples are best taken from a point in the system where the flow is TURBULENT (Reynolds No. greater than 4000). The turbulent flow creates a mixing action. Where flow is streamline or LAMINAR, larger particulate may tend to settle toward the lower pipe surface and not be sampled.

System Condition Changes

Changes in the system operating condition, flow, temperature, pressure or vibration, can result in previously sedimented contaminant being retrained into the flowing oil. It is also possible that these changes may cause partially contaminated filter elements to shed particulate into the system. Samples should, therefore, be extracted when the system is in a steady state condition and the result less likely to be distorted by contaminant peaks.

There are a number of proprietary sampling valves available which adhere to good theoretical principles. However, they do tend to generate a level of precision and cost which is unnecessary for trend monitoring.

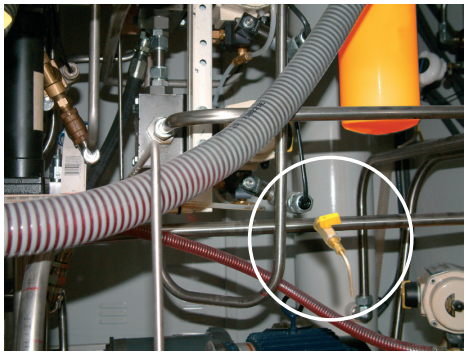

Sampling points should enable extraction of a sample without changing the system's condition. Fine control needle valves are not desirable, as they have a tendency to silt up under some operating conditions, causing the distribution of contaminants in the fluid to be changed. The sampling port should be protected to maintain cleanliness and thoroughly flushed before collecting the sample for analysis. Allow sufficient airspace in the bottle to enable 80% fill.

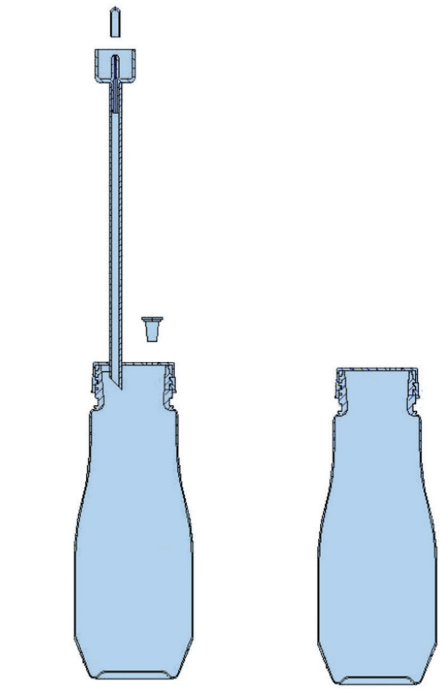

ACC6NW001 x 50 = ACC6NW002

ACC6NK001

Bottle Cleanliness

It is preferable that bottles have sealing screw caps and both parts are cleaned to a suitable level in accordance with ISO3722.

Standard Parker bottles are supplied clean to ISO15/13/10 (NAS Class 4).

The bottle should remain capped until time of sample filling and re-capped immediately afterwards.

Sample Mixing

Sedimentation of contaminant in a sample will occur, the rate of which is dependent upon both fluid and particle characteristics.

Samples should be analysed, without delay, once agitated and de-gassed.

Tel: +45 63 12 83 00 | Email: ps@hymatik.com | www.hymatik.com | Hvidkaervej 27a, DK-5250 Odense SV, Denmark

Universal Bottle Sampler

Ordering Information

Standard products table

Part Number	Description
UBS9002	Universal Bottle Sampler/mineral oil (includes aluminium case and accessories)
UBS9005	Universal Bottle Sampler/aggressive fluid (Includes aluminium case and accessories)

Accessories

Part Number	Supersedes	Description
ACC6NK001	B89907	Sample bottle (2/pack)
ACC6NW001	B89911	Sample bottle with extraction hose (2/pack)
ACC6NW002	B89910	Sample bottle with extraction hose (50/pack x 2)
ACC6NK002	S840054	UBS power supply
ACC6NK003	S890005	UBS degassing chamber and pump
ACC6NK004	B89603	UBS degassing chamber only
ACC6NK005	B89902	Cable and adaptor

Note 1: Part numbers featured with bold highlighted codes will ensure a 'standard' product selection.
Note 2: Alternate displayed part number selection will require you to contact Parker Filtration for availability.

Typical Applications

- Batch sampling
- Aircraft rig certification
- Oil research
- Laboratory testing
- Transfer line monitoring



Tel: +45 63 12 83 00 | Email: ps@hymatik.com | www.hymatik.com | Hvidkaervej 27a, DK-5250 Odense SV, Denmark

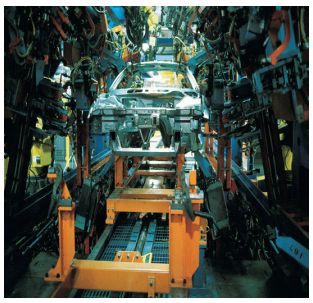

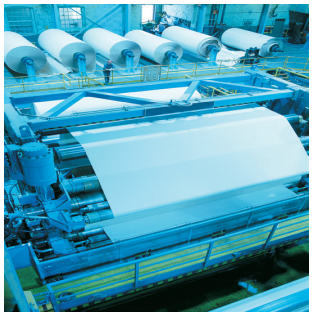

aerospace
climate control
electromechanical
filtration
fluid & gas handling
hydraulics
pneumatics
process control
sealing & shielding





icountBS - Bottle Sampler

The benchtop solution to fluid contamination bottle sampling



Parker

ENGINEERING YOUR SUCCESS.

Tel: +45 63 12 83 00 | Email: ps@hymatik.com | www.hymatik.com | Hvidkaervej 27a, DK-5250 Odense SV, Denmark

The Complete Solution - Industrial Design Combined with State of the Art Technology

The icountBS - Bottle Sampler from Parker, with its innovative industrial design, has been developed for customers looking for state of the art technology, attention to detail and the compactness of a permanent laboratory particle analysis instrument.

Combine this with on-board, laser based, leading edge technology to bring to all industries a truly revolutionary Particle Counter. The innovative icountBS is a product from the next generation of Parker's fluid particle analysis and monitoring solutions.

The IBS features an easy to use interactive touch screen, environmentally controlled pressurized bottle chamber, an internal compressor pump, automated door locking mechanism, sample tube cleaning sleeve that minimizes cross contamination, and an internal printer.

The icountBS benefits from Parkers knowledge and experience of providing fluid analysis equipment to the market for over 15 years.

icountBS - Bottle Sampler Features & Benefits

- Customer programmable number of sample runs/sample bottle averaging and pre-test flush volumes from 10ml min. to 100ml max.
- Input via fluid resistant touch screen display.
- Repeatable and reproducible performance to ISO4406:1999, AS4059 Rev E, and NAS1638 particle count distributions. Other calibration standards are included.
- On-board compressor and 'shop' air capable.
- Design concept allowing for portability. DC and rechargeable battery pack options built in.
- Sample tube self cleaning sleeve minimizing cross contamination.
- 500 test sample memory.
- Data download via USB jump drive or USB to USB included.
- Internal printer.



Tel: +45 63 12 83 00 | Email: ps@hymatik.com | www.hymatik.com | Hvidkaervej 27a, DK-5250 Odense SV, Denmark



Home Screen

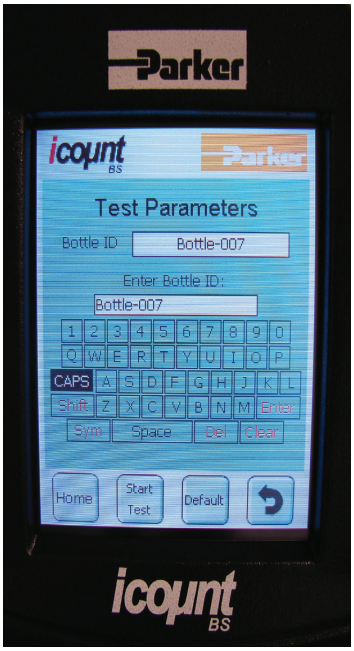

Sample ID Input

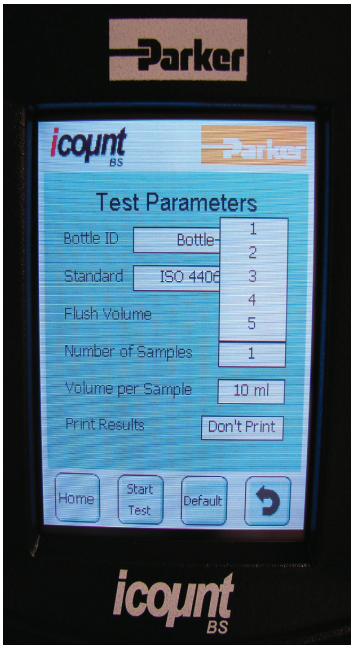

Number of Sample Runs

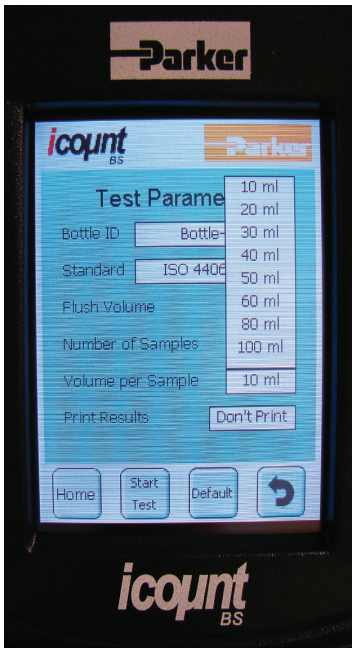

Sample Volume

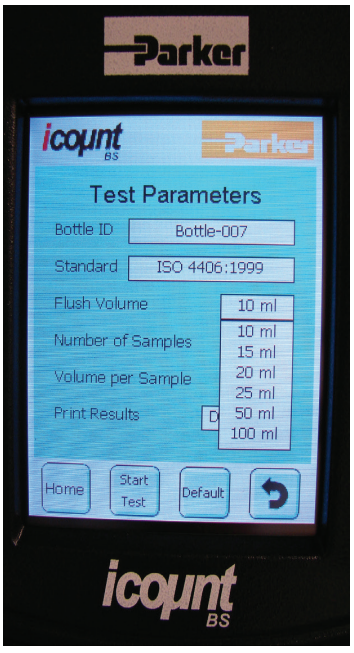

Flush Volume

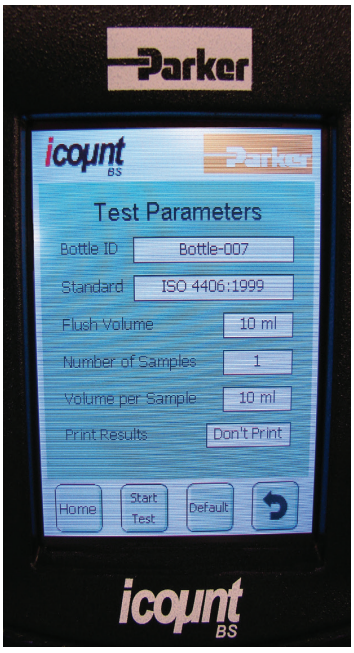

Start Test

Tel: +45 63 12 83 00 | Email: ps@hymatik.com | www.hymatik.com | Hvidkaervej 27a, DK-5250 Odense SV, Denmark

Analyzing the Test Results

Once the automatic oil sample test has been completed, what next?

Solid contaminants in fluid power systems vary in size, shape, form and quantity. The most harmful contaminants are normally between 6 microns and 14 microns. The ISO code is the preferred method of reporting quantity of contaminants.

The ISO code number corresponds to contamination levels relating to three sizes. The first scale number represents the number of particles that are equal to and greater than 4µm (c) per ml of fluid, the second number for particles that are equal to and greater than 6 µm(c) per ml of fluid and the third number for particles that are equal to and greater than 14 µm(c) per ml of fluid.

For example: An ISO code 20/18/14 indicates that there are between 5,000 - 10,000 particles that are equal to and greater than 4µm(c), between 1,300 - 2,500 particles that are equal to and greater than 6µm(c), and between 80 - 160 particles that are equal to and greater than 14µm(c).



Tel: +45 63 12 83 00 | Email: ps@hymatik.com | www.hymatik.com | Hvidkaervej 27a, DK-5250 Odense SV, Denmark

icountBS Product Specification

Principle of Operation	Laser based light obscuration
Dimensions	H=20.9" x W=7.48" (8.27" Door) x D=16.1"
Weight	31 lb. (14kg)
Mechanical Composition	Stainless steel 316, plated mild steel and aluminum
Plastics Composition	Precision polyurethane RIM moldings and ABS plastic
Environmental Operating Temperature (Tested)	41°F to 140°F (+5°C to +60°C)
Operating RH Range	20 - 85% [Tested at 86°F (30°C), no condensation]
Storage Temperature	40°F to 194°F (-40°C to +90°C)
Storage RH Range	10 - 90% (Tested at 30°C, no condensation)
Channel Sizes	MTD - >4µ(c), >6µ(c), >14µ(c), >21µ(c), >38µ(c), >70µ(c), ACFTD - >2µ, >5µ, >15µ, >25µ, >50µ, >100µ
Analysis Range	ISO 7 to 21, NAS 0 to 12
Contamination Standards	MTD - ISO 4406:1999 & NAS 1638 ACFTD - ISO 4406:1987, ISO 4406:1991, NAS 1638, and AS4059 Rev E For further contamination standards consult Parker
Calibration Standard	ISO MTD and ACFTD calibration to traceable ISO Standards. (Contact Parker for further details)
Fluid Management	Maximum single sample = 100ml, Minimum single sample = 10ml
Possible Test Configurations	User selectable from single test up to 5 tests per run (eg. 1 x 100ml up to 5 x 50ml per run)
Pre-Test Flush Volume	Minimum = 10ml, Maximum = 100ml
Viscosity Range	5 to 400 cSt
Fluid Compatibility	Mineral oils, petroleum and hydrocarbon based fluids. For all other fluids, consult factory.
Sample Bottle Size	No specific bottle required. Maximum size = 2.95" (Dia.) x 5.90" (H). Maximum volume = 250ml
Memory Storage	500 tests (capacity warning after 450 tests)
Output Display	Backlight 256 color STN transmissive
Output Display Resolution	320 x 3 (RGB) (H) x 240 (W) dots
Display Active Area	115 (H) x 86 (W) mm
Data Input	Via icon driven resistive touch screen
Printer	Thermal dot-line printing
Printer Paper	Ø50mm - (57mm x 25mm)
Test Certification	Calibration & Certificate of Conformity
Power Supply	DC output - 12V @ 6.60Amps, 80 watts max. AC input - 100 to 240V @ 1.2Amps (50 - 60 Hz)
Battery Power	2 hours (recommended to be fully charged every 3 months)
Battery Stand-By Time	1 month (then 1 hour of operation)
Battery Fuse	6.3 Amps (anti-surge)
Air Pressure Source	50 psi (3.5 bar) internal mini-compressor or 101 psi (7 bar) shop air



Tel: +45 63 12 83 00 | Email: ps@hymatik.com | www.hymatik.com | Hvidkaervej 27a, DK-5250 Odense SV, Denmark

icountBS - Bottle Sampler Ordering Information

Part Number
IBS3000 (offline/online)
IBS3100 (offline only)

Accessories	Part Number	Included
250ml Sample Bottle (2 per pk)	ACC6NW001	* (1 pk)
Sample Bottle Pack (50)	ACC6NW002	(2 pks of 50)
Vapour/Waste Bottle	ACC6NW003	*
Waste Bottle Folder	ACC6NW004	
Printer Paper Reel (x1)	ACC6NW005	*
Transport Case	P893865	*
1m Waste Tube (Clear)	ACC6NW009	*
1m Vapour Hose (Blue)	ACC6NW010	*
USB Memory Stick	ACC6NW011	*
icountBS CD Manual	ACC6NW012	*
Air Connector	P.893318	*

* These items included with IBS unit within a transportation case.

Tel: +45 63 12 83 00 | Email: ps@hymatik.com | www.hymatik.com | Hvidkaervej 27a, DK-5250 Odense SV, Denmark

Single Point Sampler

Online Sampling



The effective link to ensure accurate contamination monitoring

The SPS (Single Point Sampler) is a lightweight, compact and easy to use online sampling unit that connects an icountLCM20 to a single pressure test point in a fluid system. Suitable for use with mineral and biodegradable oils, petroleum based and phosphate ester fluids, the SPS offers fingertip operated control even at high pressures - 6,000 PSI (420 bar) rated maximum pressure.

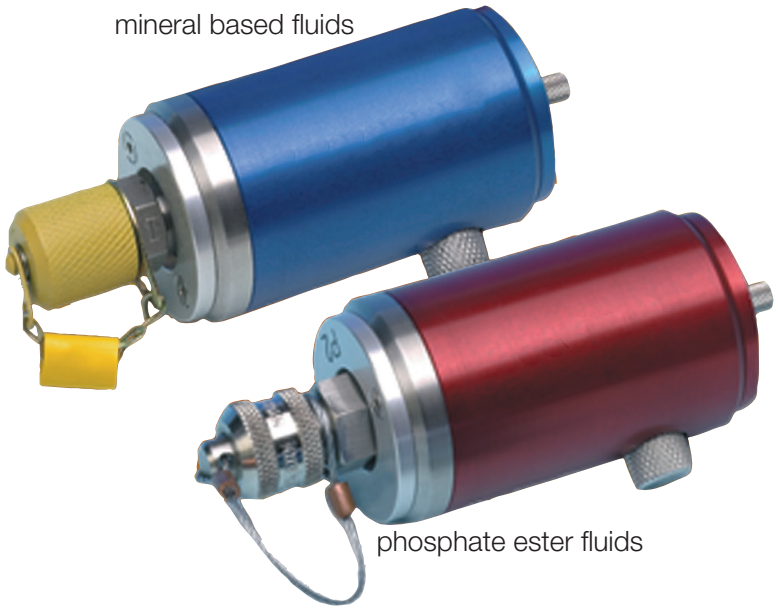

Product Features:

- Lightweight, compact and easy to use online sampling unit.
- Connects an icountLCM20 to a single pressure test point in a fluid system.
- Suitable for use with mineral and biodegradable oils, petroleum based and phosphate ester fluids.
- 6,000 PSI (420 bar) rated maximum pressure

Tel: +45 63 12 83 00 | Email: ps@hymatik.com | www.hymatik.com | Hvidkaervej 27a, DK-5250 Odense SV, Denmark

Single Point Sampler

Features & Benefits

The Single Point Sampler provides a means to connect an icountLCM20 to a single pressure test point and balance the differential pressure across the system, to provide a controlled flow of oil into the icountLCM20 and away into a waste oil receptacle.

- Lightweight, compact and easy to use design
- Fingertip operated control valve even at high pressures
- 6,000 PSI (420 bar) rated
- Facilitates testing from large diameter pipework
- Capability to test up to 500cSt viscosity oils (pressure permitting)
- Pressure compensated flow control mechanism
- Possible to control the valve with the same level of accuracy whether the device is operating at high or low pressure
- Capable of allowing a flow rate in excess of 10ml/min when operating at any viscosity within the product specification
- Suitable for fluid temperatures from +5°C to +80°C (+41°F to +176°F)
- High quality polished finish. (stainless steel/ aircraft grade aluminium)
- Capable of working with an icountLCM20 connected into a system via the standard one metre extension hose kit
- Suitable for use with mineral and biodegradable oils, petroleum based and phosphate ester fluids
- Phosphate ester version utilizes the 5/8" BSF HSP style fitting
- Designed so that it meets the lowest possible level of magnetic permeability
- Supplied with accessories kit
- It will maintain the set flow rate between upper and lower limits within a 100 bar inline pressure change
- Clear product identification to ensure that it is connected correctly (i.e. downstream of the icountLCM20).

Connection Instructions

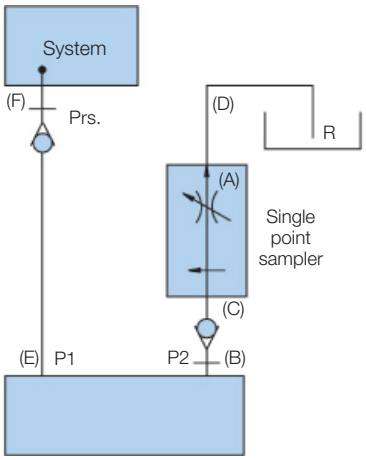

icountLCM20

1. Ensure valve is closed (A).
2. Connect P2 on icountLCM20 to P2 on Single Point Sampler (SPS) (C).
3. Connect drain line on SPS (D).
4. Connect P1 of icountLCM20 to the system (F).
5. The SPS is ready to operate.
6. Open valve (A) slowly until the oil flows continuously from the drain line (D) into a reservoir or receptacle (R).
7. Switch on monitor and begin testing.

icountLCM20 Only

Carry out flow test as shown in the manual. If test is showing below Dt 38.5°F (3.6°C) then carry out test as normal. If, however, test is above Dt 38.5°F (3.6°C) then increase oil flow by turning valve (A) counterclockwise and then carry out flow test. Do this until Dt is below 38.5°F (3.6°C) and carry out test as normal once achieved.

WARNING! Ensure that SPS valve is closed and icountLCM20 is connected to the SPS BEFORE connection to system.

Tel: +45 63 12 83 00 | Email: ps@hymatik.com | www.hymatik.com | Hvidkaervej 27a, DK-5250 Odense SV, Denmark

Single Point Sampler

Specifications

Fluid Compatibility:
Mineral oil and petroleum based fluids
Phosphate ester fluid
For other fluids consult factory

Seals:
Fluorocarbon or Perfluoroelastomer

Maximum Working Pressure:
6,000 PSI (420 bar)

Weight:
500 grams max. (Not including hoses)

Unit Size:
1.77in dia x 4.8in long (45mm dia x 123mm long)

System Connection:
Mineral petroleum fluids - M16 (G1/4" BSP) with cap,
Phosphate ester - 5/8" BSF HSP

Operating Temperature Range:
+41°F to +176°F (+5°C to +80°C)

Storage Temperature Range:
-15°F to +176°F (-26°C to +80°C)

Construction:
Body: Aluminium BS 1470 – pressurized end stainless steel
Finish: Anodized blue - Mineral fluid
Anodized red - Phosphate ester fluid

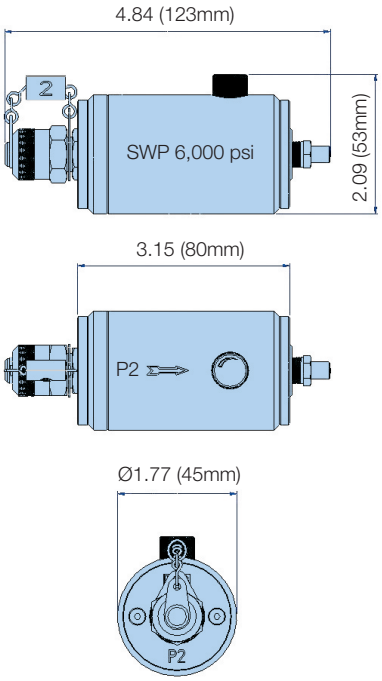

dimensions in inch (mm)

Ordering Information

Standard products table

Part Number	Supersedes	Description
SPS2021	SPS.2021	Single point sampler (mineral fluids)
SPS2061	SPS.2061	Single point sampler (phosphate ester fluids)
ACC6NW003	B84784	Waste bottle (Universal)
ACC6NH001	B84224	Extension hose/coupling (mineral fluids)
ACC6NH002	B84225	Extension hose/coupling (phosphate ester fluids)
ACC6NH003	B84788	Waste hose (mineral fluid)
ACC6NH004	B84787	Waste hose (phosphate ester fluids)

Note 1: Part numbers in bold are 'standard' product selection with all accessories.

Tel: +45 63 12 83 00 | Email: ps@hymatik.com | www.hymatik.com | Hvidkaervej 27a, DK-5250 Odense SV, Denmark

System20

Inline Sensors & Monitors



Effective in-line system sensors and monitors

In-line System20 sensors and hand-held monitors designed to give accurate and instant fluid system readings of flow, pressure and temperature. 3 sizes of inline System20 sensor for pressures up to 6,000 PSI (420 bar), an analog monitor that utilizes 3 day-glow gauges with protective cover. EM20 electronic monitor with full digital display and 300 test memory.



Product Features

- 2 types of System20 sensor are available.
  STI = industrial with reverse flow capability.
  STS = mobile without reverse flow capability.
- 3 sizes of industrial inline System20 sensor for pressures up to 6,000 PSI (420 bar). 2 sizes of Mobile System20 sensor.
- Analog monitor utilizes 3 day-glow gauges with protective cover.
- EM20 electronic monitor with full digital display and 300 test memory.
- For use with all mineral oils, water and oil/water emulsions.

Tel: +45 63 12 83 00 | Email: ps@hymatik.com | www.hymatik.com | Hvidkaervej 27a, DK-5250 Odense SV, Denmark

System20

Features & Benefits

Covering a wide range of flow rates, fluid types and applications, Parker's System 20 sensors are designed to be used with System 20 electronic or analog monitors, icountLCM and the icountPD. Specially developed System20 sensors are available for use with phosphate ester fluids (EPDM Seals).

- System20 monitors, combined with the inline sensor, give the user accurate and instant readings of flow, pressure and temperature without the need for costly system downtime.
- For use with all mineral oils, water and water/oil emulsions.

Analog Monitor (STM)

- Utilizes 3 Day-Glo dial gauges with a protective hinged cover.
- Calibrated up to 100 gpm with dual scale PSI/bar & °F/°C. (USGPM also available)

Electronic Monitor (EM20)

- Gives a full digital display.
- Automatically calibrated for all 3 sizes of sensor.
- Indicates line, differential and rising peak pressure.
- Easily scrolled from metric to US.
- 300 test memory.
- Capable of downloading saved data to download software.



Industrial STI family



2 sizes of System20 Inline Mobile Sensors are available

Typical Applications

- Drilling equipment
- Mining
- Grinding and conveying
- Industrial hydraulics
- Mobile applications

Hydraulic system users need to ensure that lost production is kept to the absolute minimum. To ensure this, predictive maintenance utilizing routine condition monitoring of hydraulic systems is essential.

Tel: +45 63 12 83 00 | Email: ps@hymatik.com | www.hymatik.com | Hvidkaervej 27a, DK-5250 Odense SV, Denmark

System20

Specifications: Sensors



Construction:
Industrial: (STI)
Body: 303 SS
Internal components: SS and Brass
Mobile: (STS)
Body: 303 SS
Internal components: Cast Aluminium and SS

Flow Capacities:
All suitable for use with oil, water and oil/water emulsion
Size 0: 0.5-7 GPM (6-25 l/min)
Size 1: 5-26 GPM (20-100 l/min)
Size 2: 21-100 GPM (80-380 l/min)

Max. Working Pressure:
6,000 PSI (420 bar)

Capability:
Reverse flow (STI only)

Pressure Drop:
At max. rated flow, Δp is 16 psi (1.1 bar), mineral oil fluid at 30 cSt 140 SSU

Ports:
Size 0: SAE-6, G6
Size 1: SAE-12, G12
Size 2: SAE-20, G20

Repeatability:
±1% FSD

Accuracy:
Flow ±2.5% full scale deflection*

Weight:
Size 0: 1.2 lbs. (0.5kg)
Size 1: 8.4 lbs. (3.5kg)
Size 2: 9 lbs. (4.4kg)

Aggressive Fluid Applications:
EPDM internal/external seals

Dimensions inches (mm)

Size		Model	AØ	B	C
Industrial	0	STI	1.18 (30)	3.74 (95)	2.20 (56)
	1	STI	1.61 (41)	5.39 (137)	2.62 (66.5)
	2	STI	2.63 (66.7)	9.11 (231.3)	2.89 (73.5)
Mobile	1	STS	1.61 (41)	4.13 (105)	3.11 (79)
	2	STS	2.36 (60)	6.5 (165)	3.82 (97)

Ordering Information

Standard products table

Part Number	Size	Flow Range (GPM)	Fluid Type	Port	Reverse Flow Capability
S.850001	0	.5-7	Mineral	SAE-6	Yes
STI.1344.100	1	5-26	Mineral	SAE-12	Yes
STI.2344.100	2	21-100	Mineral	SAE-20	Yes
STI.0144.100	0	.5-7	Mineral	G6	Yes
STI.1144.100	1	5-26	Mineral	G12	Yes
STI.2144.100	2	21-100	Mineral	G20	Yes
STI.1348.100	1	5-26	Aggressive	SAE-12	Yes
STI.2348.100	2	21-100	Aggressive	SAE-20	Yes
STS.5117.210	1	5-26	Mineral	SAE-12	No
STS.5217.210	2	21-100	Mineral	SAE-20	No

Note 1: Part numbers featured with bold highlighted codes will ensure a 'standard' product selection.
Note 2: Alternate displayed part number selection will require you to contact Parker Filtration for availability.
Note 3: Mobile Sensors are also available - Contact Parker
Note 4: *Accuracy 5.5% > 25 gpm. (Applies to STI1144100 and STI1148100 only)

Tel: +45 63 12 83 00 | Email: ps@hymatik.com | www.hymatik.com | Hvidkaervej 27a, DK-5250 Odense SV, Denmark

System20

Electronic Monitor Specification

Construction:
A sealed assembly requiring no routine maintenance or adjustment. Body moulded in ABS. Key pad moulded in silicon rubber. The monitor is suitable for use with all mineral oils, water and oil/water emulsions.

Display Details

Flow section:
The analog flow scale has reverse flow and overflow indication and provides a percentage reading of the digital full scale display automatically calibrated for all sizes of System 20 Sensor.

Pressure Section:
Designed to indicate line pressure, differential pressure and rising peak pressure. Connected to a System 20 Sensor it will monitor pressure up to 6,000 PSI (420 bar) with an accuracy of ±1% FSD.

Temperature Section:
Temperature reading between 14°F to 230°F (-10°C and +110°C).

Weight:
3 lbs. (1.4kg)

Data Logging:
Each test logs the following data:
Test number; time & date; sensor size; media tested; flow rate, pressure & temperature.

Data Download:
The System 20 electronic monitor is capable of downloading saved test data to a compatible PC via an RS232 connection using datum.

Batteries:
6 x AA batteries.

Re-calibration:
Annual certification by an approved Parker Service Center.

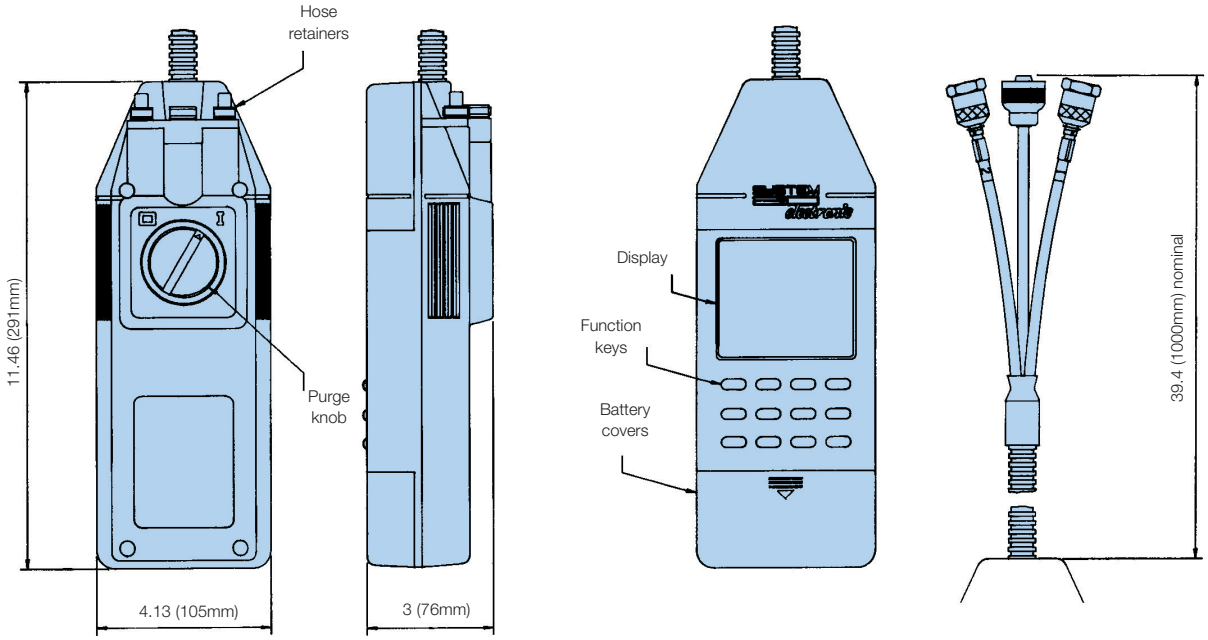

dimensions in inch (mm)

Ordering Information

Standard products table

Part Number	Supersedes	Description
EM209000	EM20.9000	System 20 electronic monitor
ACC6NK000	P653607	Transit case*
ACC6NJ001	B85617	Dongle and cable assembly*

* Not included with monitor.

Tel: +45 63 12 83 00 | Email: ps@hymatik.com | www.hymatik.com | Hvidkaervej 27a, DK-5250 Odense SV, Denmark

System20

Analog Monitor

Construction:
A sealed assembly requiring no routine maintenance or adjustment. Body moulding in ABS. The monitor is suitable for use with all mineral oils, water and oil/water emulsions. The monitor has 3 day-glo dial gauges and features a protective hinged cover.

Display Details

Flow Section:
The flow scale has double scales for size 1 and 2 sensors only. Calibrated up to 26 GPM (100 l/min) and 100 GPM (380 l/min). The flow dial has excess-flow indication.

When the system is in reverse flow or when the high pressure lines to the sensor have been transposed, a 'below zero' indication is given.

Pressure Section:
Dial readings in both bar and psi up to 6,000 PSI (420 bar).

Temperature section:
The temperature dial gives readings between 14°F to 230°F (-10°C and +110°C).

Weight:
3 lbs. (1.4kg)

A viscosity chart is provided for mineral oil applications where monitoring is required at variable viscosities (cSt).

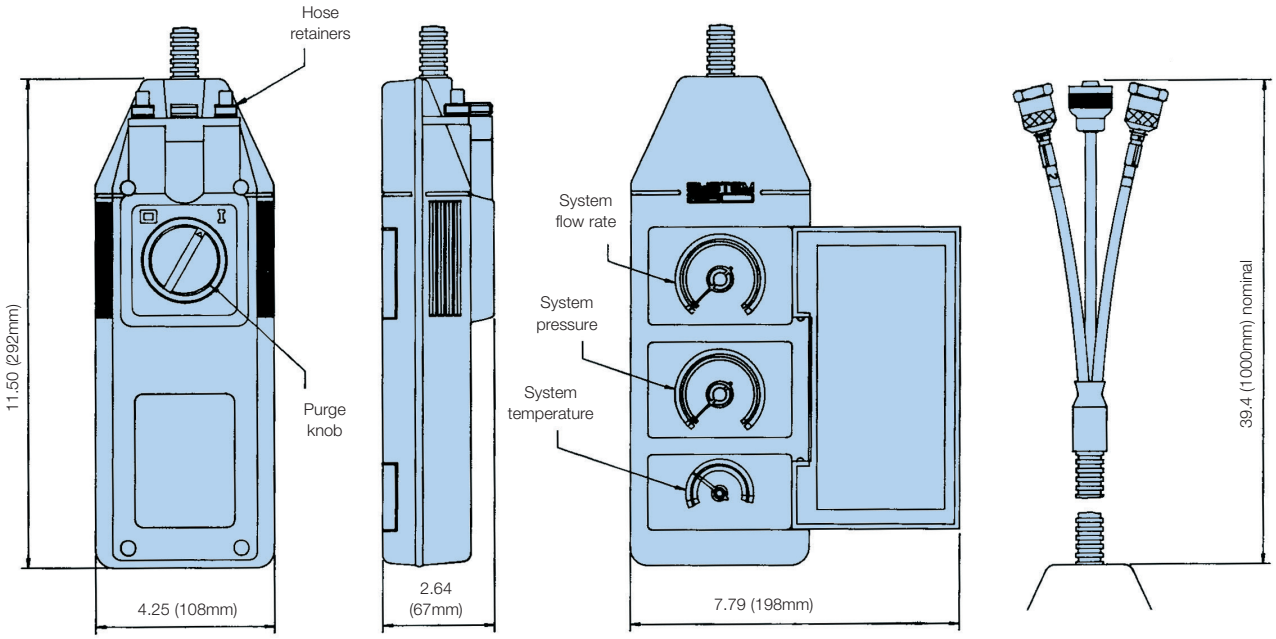

dimensions in inch (mm)

Ordering Information

Standard products table

Part Number	Supersedes	Media Type	Flow Readings	Pressure Readings	Temperature Readings
STM6211110	STM.6211.110	Oil	l/min	Dual scale PSI/bar	Dual scale°F/°C
STM6611110	STM.6611.110	Oil	GPM	Dual scale PSI/bar	Dual scale°F/°C
STM6211120	STM.6211.120	Water	l/min	Dual scale PSI/bar	Dual scale°F/°C
STM6611120	STM.6611.120	Water	GPM	Dual scale PSI/bar	Dual scale°F/°C

Accessories

Product Number	Supersedes	Description
ACC6NJ000	P653607	Transit Case
ACC6NJ002	P653106	Metal sensor protective cap

Tel: +45 63 12 83 00 | Email: ps@hymatik.com | www.hymatik.com | Hvidkaervej 27a, DK-5250 Odense SV, Denmark





aerospace
climate control
electromechanical
filtration
fluid & gas handling
hydraulics
pneumatics
process control
sealing & shielding





icountPD

Online Particle Detector



Parker

ENGINEERING YOUR SUCCESS.

icountPD

The icountPD from Parker represents the most up-to-date technology in solid particle detection.



The design dynamics, attention to detail, and small size of the permanently mounted, on-line particle detector brings a truly innovative product to all industry. The laser based, leading-edge technology is a cost effective market solution to fluid management and contamination control.

3 Versions Available

Standard icountPD is designed for test stand, flushing skids, filter carts and other industrial applications.

icountPDR is designed for mobile equipment or any outside use other than hazardous environment.

icountPDZ is intended for applications that require a Zone II safety such as off-shore platforms or any other hazardous environment.

For Zone I applications the standard icountPD can be used within a NEMA7 enclosure.



icountPDR

Features and benefits of the icountPD include:

- Independent monitoring of system contamination trends.
- Early warning LED or digital display indicators for Low, Medium and High contamination levels.
- Moisture % RH LED indicator (optional).
- Cost effective solution in prolonging fluid life and reducing machine downtime.
- Visual indicators with power and alarm output warnings.
- Continuous performance for dependable analysis.
- Hydraulic, phosphate ester & fuel fluid compatible construction.
- Self diagnostic software.
- Fully integrated PC/PLC integration technology such as:

  RS232 and 0-5 Volt, 4-20mA, and CANBUS J1939.

Typical Applications

Mobile Equipment

- Earth Moving Machinery
- Harvesting
- Forestry
- Agriculture

Power Generation

- Wind Turbines
- Gearboxes
- Lubrication Systems

Industrial Equipment

- Production Plants
- Fluid Transfers
- Pulp & Paper
- Refineries

Maintenance

- Test Rigs
- Flushing Stands



Tel: +45 63 12 83 00 | Email: ps@hymatik.com | www.hymatik.com | Hvidkaervej 27a, DK-5250 Odense SV, Denmark

icountPD/icountPDR/icountPDZ

Diagnostic self check start-up time	5 seconds
Measurement period	5 to 180 seconds
Reporting interval through RS232	0 to 3600 seconds
Digital LED display update time	Every second
Limit relay output	Changes occur +/- 1 ISO code at set limit (Hysteresis ON) or customer set (Hysteresis OFF)
4-20mA output signal	Continuous
Principle of operation	Laser diode optical detection of actual particulates
Reporting codes	ISO 7 – 21, NAS 0 – 12, (AS 00 – 12 contact Parker) Icount will also report less than ISO 7, subject to the statistical uncertainty defined in ISO4406:1999, which is shown in the RS232, reporting results as appropriate e.g “>6”
Calibration	By recognized on-line methods, confirmed by the relevant International Standards Organization procedures
Calibration recommendation	12 months (24 months for icountPDZ)
Performance	+/- 1 ISO Code (dependant on stability of flow)
Reproducibility / Repeatability	Better than 1 ISO Code
Power requirement	Regulated 9 to 40Vdc
Maximum current draw	150mA
Hydraulic connection	icountPD: M16 x 2 hydraulic test points (5/8” BSF for aggressive version) icountPD Z2: Size: 066, Connection: EO 24 cone end
Flow range through the device	40 to 140 ml/min (optimum flow = 60ml/min)
Online flow range via System 20 Inline Sensors	Size 0 = 1.59 to 6.6 gpm - (optimum flow = 3.96 gpm) Size 1 = 6.34 to 26.4 gpm - (optimum flow = 18.5 gpm) Size 2 = 44.9 to 100 gpm - (optimum flow = 66 gpm)
Required differential pressure across Inline Sensors	5.8 psi (0.4 bar) minimum
Viscosity range	10 to 500 cSt, 1 to 500 cSt
Temperature (icountPD and icountPDR) Temperature (icountPDZ)	Operating environment: -4°F to +140°F (-20°C to +60°C) Storage: -40°F to +176°F (-40°C to +80°C) Operating fluid: +32°F to +185°F (0°C to +85°C) Operating environment: -22°F to +140°F (-30°C to +60°C) Storage: -40°F to +176°F (-40°C to +80°C) Operating fluid: +41°F to +176°F (+5°C to +80°C)
Working pressure	30 to 6,000 PSI (2 to 420 bar)
Moisture sensor calibration	±5% RH (over compensated temperature range of +10°C to +80°C)
Operating humidity range	5% RH to 100% RH
Moisture sensor stability	±0.2% RH typical at 50% RH in one year
Certification	IP66 rated (icountPD), IP69K (icountPDZ) EMC/RFI –EN61000-6-2:2001(icountPD, PDR), EN6100-6-2:2005 (icountPDZ) EN61000-6-3:2001(icountPD, PDR), EN61000-6-3:2007 (icountPDZ)
Materials	Stainless Steel case construction (icountPDZ) Stainless Steel hydraulic block (icountPD and icountPDR) Fluorocarbon seals
Dimensions	icountPD: 7.2” x 6.1” x 3.4” (182mm x 155mm x 86mm) icountPDR: 4.52” x 7.01” x 4.53” (114.7mm x 178.8mm x 115mm) icountPDZ: 10.2” x 4.49” x 4.33” (260mm x 114mm x 110mm)
Weight	icountPD: 2.9 lbs. (1.3 kg), icountPDZ: 5.73 lbs. (2.6 kg)
Default Settings	See table on page 39

Tel: +45 63 12 83 00 | Email: ps@hymatik.com | www.hymatik.com | Hvidkaervej 27a, DK-5250 Odense SV, Denmark

icountPD

Dimensions / Installation Details

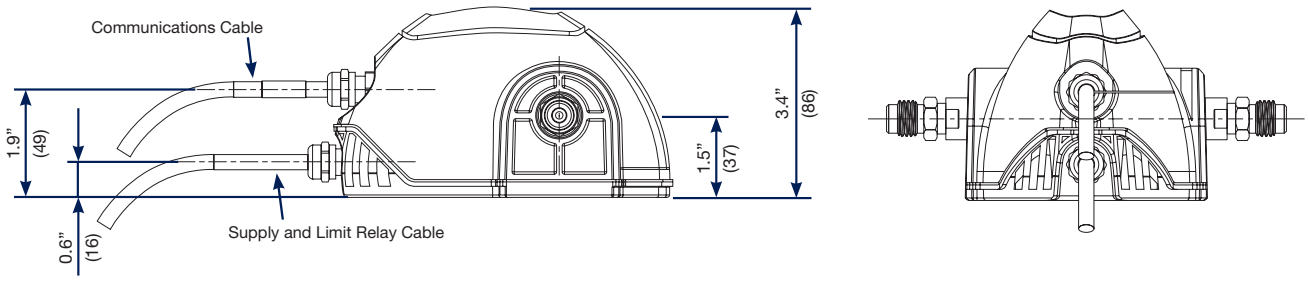

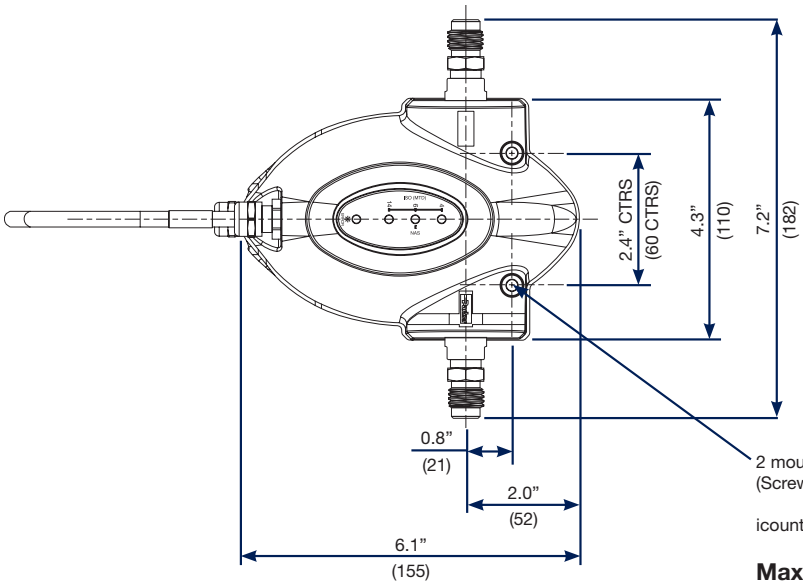

2 mounting locations to suit M5 socket head cap screw. (Screw pack supplied with icountPD)

icountPD flange thickness = 0.4" (10mm)

Maximum Torque 5Nm

dimensions in inch (mm)

***Limit Relay Wiring Instructions**

NORMALLY OPEN
NORMALLY CLOSED
COMMON

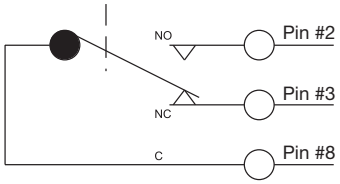

Tel: +45 63 12 83 00 | Email: ps@hymatik.com | www.hymatik.com | Hvidkaervej 27a, DK-5250 Odense SV, Denmark

icountPD

Variable mA Output Settings

The following table can be used to equate the analog output for channels A, B, and C independently.

Example: ISO code 12 is equal to 10mA.



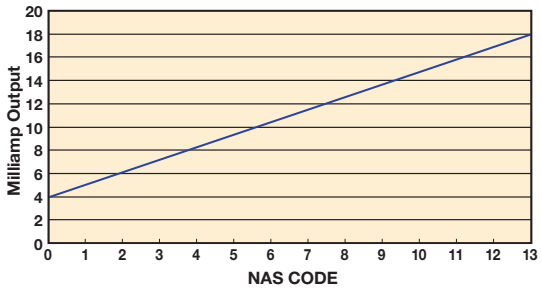

mA	ISO
4.0	0
4.5	1
5.0	2
5.5	3
6.0	4
6.5	5
7.0	6
7.5	7
8.0	8
8.5	9
9.0	10
9.5	11
10.0	12
10.5	13
11.0	14
11.5	15
12.0	16
12.5	17
13.0	18
13.5	19
14.0	20
14.5	21
15.0	**
15.5	**
16.0	**
16.5	**
17.0	**
17.5	**
18.0	**
18.5	**
19.0	OVERRANGE
19.5	OVERRANGE
20.0	ERROR

mA	NAS
4	00
5	0
6	1
7	2
8	3
9	4
10	5
11	6
12	7
13	8
14	9
15	10
16	11
17	12
18	**
19	**
20	ERROR

4-20mA output settings

ISO Setting

mA current = (ISO Code / 2) +4
eg. 10mA = (ISO 12 / 2) +4
or
ISO Code = (mA current - 4) *2
eg. ISO 12 = (10mA -4) *2

NAS Setting

mA current = NAS Code +5
eg. 15mA = NAS 10 +5
or
NAS Code = mA current -5
eg. NAS 10 = 15mA – 5

Variable Voltage Output Settings

The variable voltage output option has the capability of two different voltage ranges: a 0-5Vdc range as standard, and a user-selectable 0-3Vdc range.

The full list of commands on how to change the voltage output is available from Parker.

The following tables can be used to relate the analog output to an ISO or NAS code.

For example, in a 0-5Vdc range, ISO code 16 is equal to an output of 3.5Vdc. In a 0-3Vdc range, ISO code 8 is equal to an output of 1.0Vdc.

Table relating ISO codes to voltage output

ISO	Err	0	1	2	3	4	5	6	7	8	9	10	11
0-5Vdc	<0.2	0.3	0.5	0.7	0.9	1.1	1.3	1.5	1.7	1.9	2.1	2.3	2.5
0-3Vdc	<0.15	0.2	0.3	0.4	0.5	0.6	0.7	0.8	0.9	1.0	1.1	1.2	1.3

ISO	12	13	14	15	16	17	18	19	20	21	22	Err
0-5Vdc	2.7	2.9	3.1	3.3	3.5	3.7	3.9	4.1	4.3	4.5	4.7	>4.8
0-3Vdc	1.4	1.5	1.6	1.7	1.8	1.9	2.0	2.1	2.2	2.3	2.4	>2.45

Table relating NAS codes to voltage output

ISO	Err	00	0	1	2	3	4	5	6	7	8	9	10	11	12	Err
0-5Vdc	<0.4	0.6	0.9	1.2	1.5	1.8	2.1	2.4	2.7	3.0	3.3	3.6	3.9	4.2	4.5	>4.6
0-3Vdc	<0.2	N.S.	0.3	0.5	0.7	0.9	1.1	1.3	1.5	1.7	1.9	2.1	2.3	2.5	2.7	>2.8

Tel: +45 63 12 83 00 | Email: ps@hymatik.com | www.hymatik.com | Hvidkaervej 27a, DK-5250 Odense SV, Denmark

icountPD

Display Parameters (ISO 4406/NAS 1638)

Digital display indication

The digital display will show the actual measured codes, the channel (µ) size and the user definable limits. Visible display of the channel size and user definable limits will alternate.

The moisture sensor reading (%RH) will also be shown – if the moisture sensor option is fitted.

The order of trigger for both of the codes and moisture sensor option is:

- Solid digit(s) = code(s) that are at or below the set point (limit)
- Flashing digit(s) = code(s) that are above the set point (limit)

The display for ISO4406 and NAS1638 are identical. The ISO display is shown below.

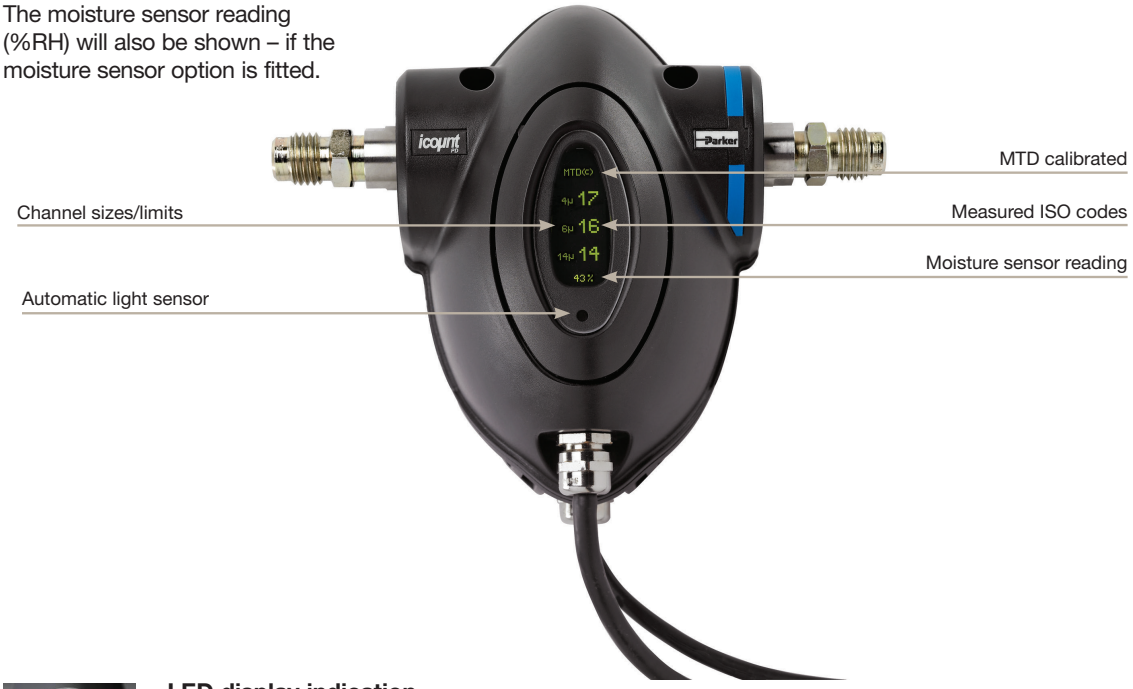



LED display indication

The LED display uses 3 sets of LED for the indication of ISO 4406 and NAS1638 code figures. Individual code lights will trigger based on the customer settings.

The order of trigger will be:

- Solid green = one ISO code, or better, below the set point (limit)
- Blinking green = ISO code at the set point (limit)
- Solid red = one ISO code above the set point (limit)
- Blinking red = two ISO codes, or more, above the set point (limit)

Moisture sensor output settings

The moisture sensor is an option that can be included when specifying the icountPD. The moisture sensor reports on the saturation levels of the fluid passing through the icountPD sensing cell. The output is a linear scale, reporting within the range of 5% saturation to 100% saturation.

Saturation	4-20mA	0-3Vdc	0-5Vdc
5%	4.8	0.15	0.25
25%	8	0.75	1.25
50%	12	1.50	2.50
75%	16	2.25	3.75
100%	20	3.00	5.00

Tel: +45 63 12 83 00 | Email: ps@hymatik.com | www.hymatik.com | Hvidkaervej 27a, DK-5250 Odense SV, Denmark

icountPD

Auxiliary Flow Device

This simple to use flow control device fits on the downstream (outlet) side of the icountPD and is fitted with a differential pressure valve that adjusts the system flow to a range inside the icountPD specifications.

The flow control device will operate correctly between 150 psi (10.3 bar) and 2900 psi (200 bar) and the return back to an open system of 0 psi (0 bar) (DP = 2900 psi, 200 bar).

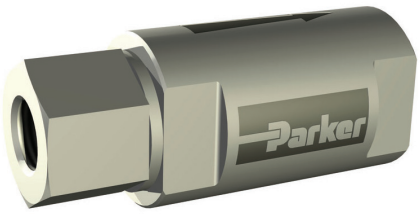

P/N ACC6NN019

Optional Accessories					
Description	Part Number				
	Mineral/Fuel	Phosphate Esters	IPD	IPDR	IPDZ
1 Meter Hose Length	ACC6NN001	ACC6NN002	X		
2 Meter Hose Length	ACC6NN003	ACC6NN004	X		
5 Meter Hose Length	ACC6NN005	ACC6NN006	X		
1/4” BSP Test point	ACC6NN007	ACC6NN008	X		
1/8” BSP Test point	ACC6NN009	ACC6NN010	X		
1/8” NPT Test point	ACC6NN011	ACC6NN012	X		
Single Point Sampler	SPS2021	SPS2061	X	X	X
US Power Supply	ACC6NE010		X	X	X
European Power Supply	ACC6NN013		X	X	X
5 meter, M12, 8-pin plug and socket cable kit*	ACC6NN014	ACC6NN015	X		
Deutsch 12-pin connector kit	ACC6NN016		X	X	
RS232 to USB converter	ACC6NN017		X	X	X
12” long M12 8-way RS232 & power cable kit	ACC6NN018		X		X
External Flow Device	ACC6NN019		X	X	X
M12, 12 way cable	ACC6NN024			X	

* Cable Kit consists of two 5 meter cables to enable all output options (Communications cable and Relay/Power Supply cable).

Tel: +45 63 12 83 00 | Email: ps@hymatik.com | www.hymatik.com | Hvidkaervej 27a, DK-5250 Odense SV, Denmark

icountPDZ

ATEX Approved Online Particle Detector



For use in explosive and hazardous areas

The icountPD Particle Detector from Parker represents the most up to date technology in solid particle contamination analysis. This compact, permanently mounted laser-based ATEX approved particle detector module is designed for use in Zone II areas and is housed in a robust Stainless Steel IP69K approved enclosure that provides a cost effective solution to fluid management and contamination control.



Product Features:

- Independent monitoring of system contamination trends.
- Assembled in an approved and certified Stainless Steel enclosure to comply with ATEX Directive 94/9/EC.
- Can be used in explosive and hazardous areas.
- ATEX Zone II.
- Certified to CE Ex II 3GD,Ex nA IIC T4 Gc,Ex tc IIIC Dc SIRA 09ATEX4340X and IECEx SIR 09.0137X (-30°C<Ta<+60°C).
- Moisture & %RH indicator (optional).
- Warning limit relay outputs for low, medium and high contamination levels.
- Continuous performance for prolonged analysis.
- Self diagnostic software.
- Full PC/PLC integration technology such as:- RS232 and 0-5Volt, 4-20mA, CAN(J1939) (Contact Parker for other options.
- Set up and Data logging support software included.

icountPD

Ordering Information

BOX 1	BOX 2	BOX 3	BOX 4	BOX 5	BOX 6	BOX 7	BOX 8
IPD	1	2	2	2	2	1	30

BOX 1: Basic Assembly

Symbol	Description
IPD	Standard Particle Detector
IPDR	Particle Detector - Robust Construction
IPDZ	Particle Detector - Hazardous (Zone 2)

BOX 2: Fluid Type[1, 2]

Symbol	Description
1	Mineral Oil
2	Phosphate Ester **(iPD, iPDR only)**
3	Aviation Fuel (4 channel) **(iPD, iPDZ only)**

BOX 3: Calibration

Symbol	Description
2	MTD

BOX 4: Display

Symbol	Description
1	None **(iPDR, iPDZ only)**
2	LED **(iPD only)**
3	Digital **(iPD only)**

BOX 5: Limit Relay

Symbol	Description
1	No **(iPDR only)**
2	Yes

BOX 6: Communication[3, 4]

Symbol	Pressure Setting
2	RS232 / 4-20mA
3	RS232 / 0-5V **(iPD, iPDR only)**
5	RS232 / CAN-bus (J1939)

BOX 7: Moisture

Symbol	Description
1	No
2	Yes

BOX 8: Cable Connector[5]

Symbol	Description
10	Deutsch DT Series **(iPD, iPDR only)**
30	M12, 8-pin plug connector **(iPD, iPDZ only)**
40	M12, 12-pin plug connector **(iPDR only)**

Standard Default Settings for all icountPDs	
Comms echo	OFF
Verbose errors	OFF
STI Senors used	OFF
Reporting standards	ISO
Particle limits	19/18/15
Measurement period	60 seconds
Reporting interval	30 seconds
Power-on mode	AUTO
Auto start delay	5 seconds
Date Format	dd/mm/yy
Default if Options Fitted	
Relay hysteresis	ON
Relay operation for particle limits	ON
Relay operation for moisture sensor limits	ON
Digital display orientation	0 degrees
Digital display brightness level	3-mid
0-5V/0-3V output voltage range	0-5V
Moisture sensor limit	70%

Notes:

1. When “3” is selected in Box 2, “1” must be selected in Box 7.
2. Aviation Fuel option can also be used for diesel fluids.
3. For iPD and iPDR units, when “5” is selected in Box 6, “10” must be selected in Box 8.
4. When “3” is selected in Box 2, “3” cannot be selected in Box 4.
5. Contact Parker for additional communication options (RS485, GPRS, LAN, WiFi, Sat, etc.)
6. The required connecting cables are available as a kit. The kit consists of two 5 meter cables (Communications cable and Relay/Power Supply cable) to enable all output options. See Accessory table on page 37 for applicable part number.

Tel: +45 63 12 83 00 | Email: ps@hymatik.com | www.hymatik.com | Hvidkaervej 27a, DK-5250 Odense SV, Denmark





aerospace
climate control
electromechanical
filtration
fluid & gas handling
hydraulics
pneumatics
process control
sealing & shielding





icount Oil Sampler (IOS)

Portable Condition Monitoring for Hydraulic Oil and Fuel Systems



Parker

ENGINEERING YOUR SUCCESS.

Tel: +45 63 12 83 00 | Email: ps@hymatik.com | www.hymatik.com | Hvidkaervej 27a, DK-5250 Odense SV, Denmark

Accurate Condition Monitoring made Quick, Simple and Cost Effective

The icountOS (IOS) is an innovative solution to the challenge of measuring the quality of hydraulic oils and hydrocarbon fuels in many different applications: from renewable energy, marine and offshore, to manufacturing, mobile, agriculture, military and aerospace.

Compact, lightweight and robust, the truly portable IOS makes field analysis simple, quick and easy.

Able to sample directly from a hydraulic reservoir, barrel, vehicle fuel tank or from a high pressure online hydraulic system with the addition of a pressure reducing adaptor; the IOS is undoubtedly the most adaptable contamination service tool available today.

The system is completely self contained, with laser detection particle counter, battery and pump plus memory with web page generator for data download onto any PC or laptop - combined into a single unit.

The IOS uses Parker's proven laser detection technology, which delivers precise, repeatable, reproduceable results, in real time detection of both particulates, down to 4 microns and dissolved water.

Just as importantly, the IOS has been developed to offer a wealth of features, combined with simplicity and ease of use, at a cost that is far lower than competing systems, and which fits within most maintenance budgets.





Powerful and easy to use



Lightweight and portable

Tel: +45 63 12 83 00 | Email: ps@hymatik.com | www.hymatik.com | Hvidkaervej 27a, DK-5250 Odense SV, Denmark

Wherever, Whenever you need to be 100% sure of Oil and Fuel Quality

With its robust carrying case, sealed to IP67, and proven laser and diagnostics technologies, the IOS is the perfect tool for maintenance and plant engineers to use with all fixed and mobile plant and machinery.

IOS technology is proven in many different applications, under the most demanding conditions, and is used by leading companies around the world.



In the construction and mining sector, IOS is ideally suited to service and fluid monitoring of essential equipment and services.



In the defence industry, IOS provides essential condition monitoring support for mission critical front line battle tanks and military vehicles.

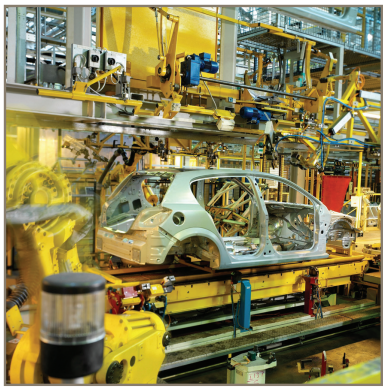

The IOS is the primary diagnostic instrument to help automotive manufacturers develop predictive monitoring programs.



Ease of on-site use, light weight and portability are key IOS features for monitoring fuel quality in military bulk fuel installations in theatre.



Accuracy and speed of use make the IOS ideal for wind turbine engineers, for both rountine maintenance and emergency repairs, flushing and commissioning.



In the aviation sector, the ability to meet strict quality controls makes the IOS the ideal choice for ground handling support companies, ensuring clean and dry fuel deliverance.

Tel: +45 63 12 83 00 | Email: ps@hymatik.com | www.hymatik.com | Hvidkaervej 27a, DK-5250 Odense SV, Denmark

icountOS

How It Works

The IOS quality condition monitor for hydraulic oils and hydrocarbon fuels uses advanced technology to produce extremely repeatable results.

At the heart of the system is a sophisticated laser detector, using a light obscuration flow cell, providing continuous measurement of fluid flow passing through a sample tube.

Measurements are taken every second as standard, although measurement intervals and test period can be defined by the user, with results being reported immediately and updated in real time.

Data is displayed on a built-in OLED digital display and can also be stored for subsequent upload via the embedded icount's web page interface connecting through an RJ45 cable.



Hydraulic Circuit

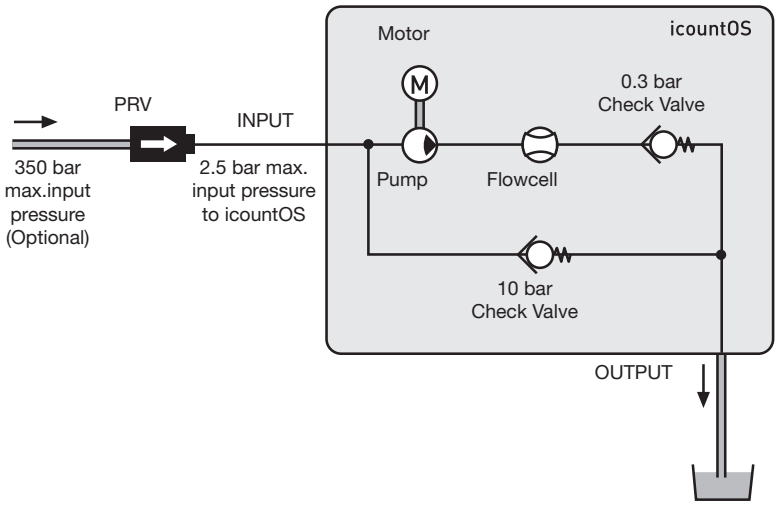

Proven Laser Detection Technology

Parker's experience in developing laser light obscuration or blockage and applying that technology in portable particle counting and detection is what makes Parker's range of contamination analyzers so very special.

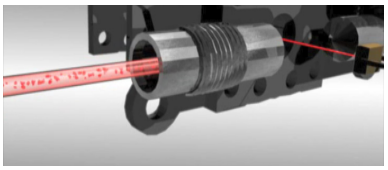

Fig 1. In simple terms a controlled column of contaminated fluid enters the laser optical scanner chamber. This design maintains contamination distribution within the fluid.

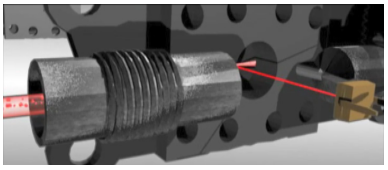

Fig 2. On reaching the photo diode cell, the highly accurate laser light is applied and projected through that oil column. The laser diode projects an image of the sample onto a photo diode cell.



Fig 3. A cast image or shadow created by the contaminant in the oil creates a measurable change in the light intensity.

Tel: +45 63 12 83 00 | Email: ps@hymatik.com | www.hymatik.com | Hvidkaervej 27a, DK-5250 Odense SV, Denmark

icountOS

dimensions are in mm (inches)

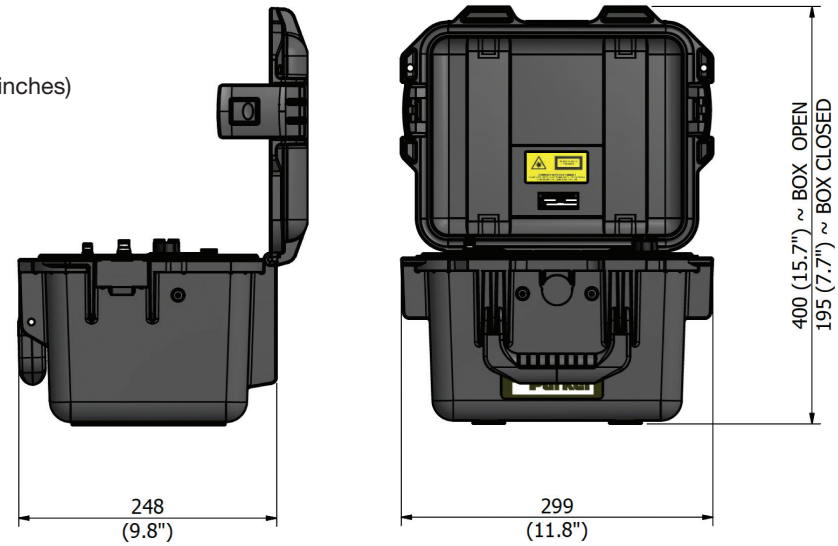

Low Pressure Connection Setup

We recommend that the IOS is positioned in a safe, stable area, as close as possible to the system output and only the hose fittings provided are used.

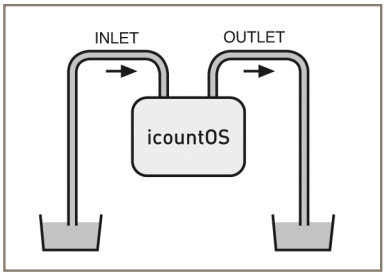

Option 1

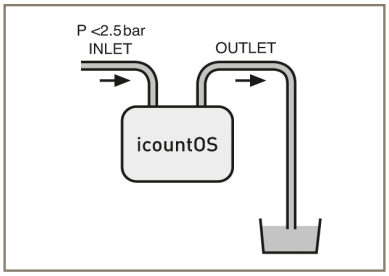

Option 2

High Pressure Connection Setup (Optional equipment needed)

(High pressure is defined for this unit as more than 2.5 bar, with a maximum of 350 bar)
We recommend that the IOS is positioned in a safe, stable area, as close as possible to the system output and only the hose fittings provided are used. For pressure systems (more than 2.5 bar) one high pressure hose assemblies: ACC6NN034, and a Pressure Reducing Valve (PRV) ACC6NN027 are required.

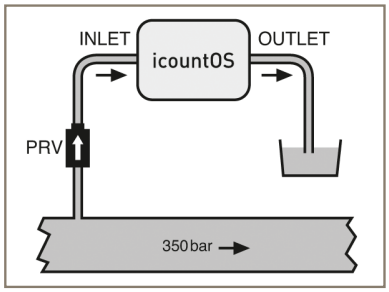

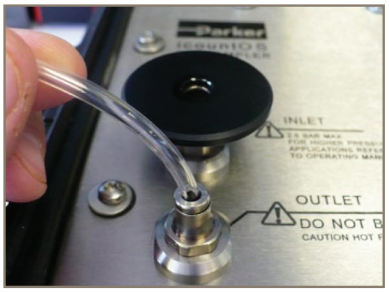

Attach OUTLET (Ø 4mm) hose



To remove the PRV, press down on the removal tool at the same time as lifting PRV off.

Tel: +45 63 12 83 00 | Email: ps@hymatik.com | www.hymatik.com | Hvidkaervej 27a, DK-5250 Odense SV, Denmark

icountOS

Features

Proven Laser Detecton Technology

The IOS uses light obscuration, light blockage technology. A light source is projected through a moving column of oil or fuel. Contaminants in the fluid interrupt the light beam, casting images on a photo diode cell, where the resulting change in light intensity produces a directly proportional change in electrical output.



High Onboard Test Data Storage Capacity

Class leading onboard memory provides storage capacity for up to 250,000 sets of test results. Data is displayed instantly, stored or downloaded to a PC or laptop for analysis via a standard IP68 RJ 45 patch cord connection; a 2m cable is supplied as standard. (File types - text/CSV or XMl)

Tel: +45 63 12 83 00 | Email: ps@hymatik.com | www.hymatik.com | Hvidkaervej 27a, DK-5250 Odense SV, Denmark

Quick Connection

Connecting the IOS is quick and reliable. The fluid connectors are on the front panel, with two secure push fittings: .236” diameter (6mm) inlet and .157” diameter (4mm) outlet/drain. Parker can supply dedicated hoses and fittings for use with most hydraulic and hydrocarbon fluids.

Tough Storm Case

The robust waterproof IP54 (when open) case and fully sealed impact resistant brushed stainless steel front panel provide excellent protection in the most demanding of applications. The combined unit weighs under 12.1 lb (5.5kg), making it an ideal ‘first use’ diagnostic service tool.

Fast Contamination Detection

The IOS provides fast detection of the presence of contaminants, with the results being shown on the front panel mounted, high visibility OLED digital display. This provides easy identification of fluid condition, showing measured codes, the sizes per channel in microns, the user definable limits and moisture sensor readings as a % of relative humidity.

Complies with the Latest Standards

The IOS is designed in accordance with the latest global standards including:

- CE marking
- EC Declaration of Conformity
- Machinery Directive
- EMC EN61000-6-3:2001
- EMC EN61000-6-2:2001
- EN 61010-1:2001

Long Life Remote Operation

The IOS uses a long life regulated 12 Vdc power supply, with an M12, 4 pin connector, plus a rechargeable NiMH detector battery unit for use onsite or in remote locations.

Fluid and Pressure Control

The IOS automatically adjusts flow rates, to an optimum level of 60ml/min. Total flow range is between 40 and 140ml/min, with maximum online operating pressure being 36 psi (2.5Bar). An optional inlet reduction valve is also available for high pressure applications.

Pressure Reducing Valve (PRV)

A pressure compensated PRV device (Parker Hannifin part number ACC6NN027) has been developed to enable testing where flow pressures in the hose exceeds 35 psi (2.5 bar), up to a maximum of 5000 psi (350 bar).





Results are viewed in the OLED digital display window



High Pressure Connection

Manual Connection: Press the Pressure Reducing Valve firmly into the **INLET** port.



Low Pressure Connection

Connect **INLET** .236” Ø (6mm) hose.

Parameter	Value
Working pressure range	0 to 35 psi (2.5 bar)
Working pressure with PRV	35 psi (2.5) to 5000 psi (350 bar)
Working viscosity	1 to 300 cSt

Tel: +45 63 12 83 00 | Email: ps@hymatik.com | www.hymatik.com | Hvidkaervej 27a, DK-5250 Odense SV, Denmark

icountOS

Web Interface

The IOS is a unique product in that it has its own web page generator which means that the stored data can be downloaded or viewed on any PC or laptop.

Utilizing a computer's Internet Explorer utility, simply plug in the supplied network cable, open Explorer and enter the IOS's unique IP/MAC address.

Home Page

Key

1. Product description
2. Key features
3. Register the product at www.parker.com/unlock

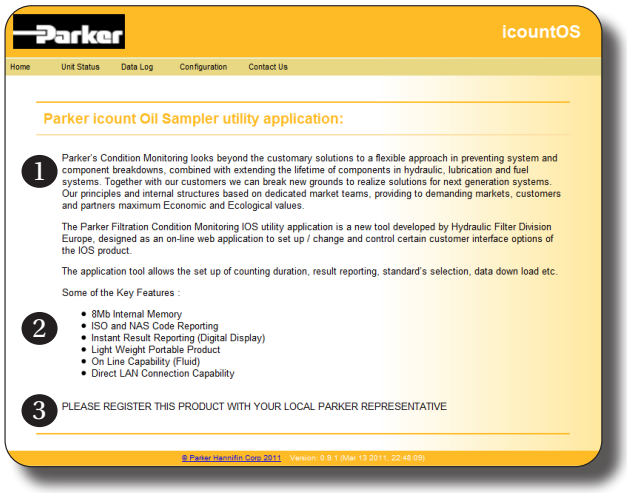

Data Log Page

Key

1. Start and Stop data logging
2. Save data in one of three date formats:
   - TXT format
   - CSV (Comma Separated Variables)
   - XML (eXtended Markup Language)
3. Clear data logging memory
4. List of the five last samples taken
5. Memory usage

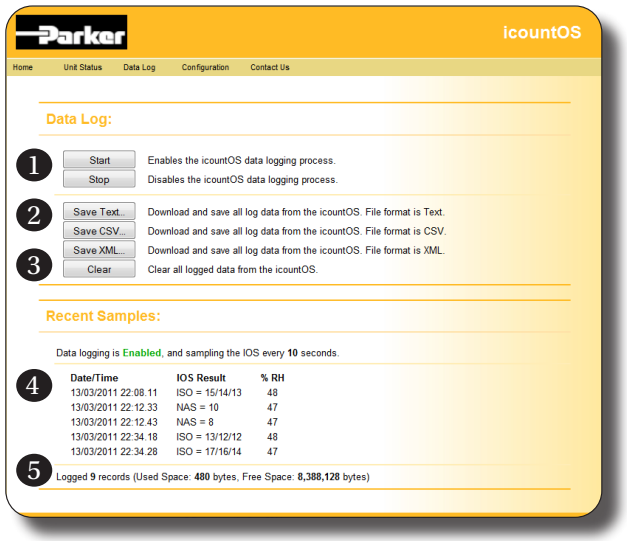

Tel: +45 63 12 83 00 | Email: ps@hymatik.com | www.hymatik.com | Hvidkaervej 27a, DK-5250 Odense SV, Denmark

icountOS
Web Interface

Unit Status Page

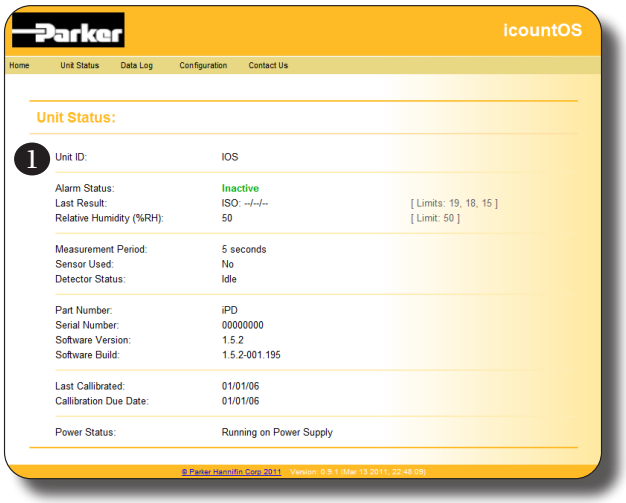

Key

1. The Unit Status page is a list of current values for various parameters for the connected IOS unit.

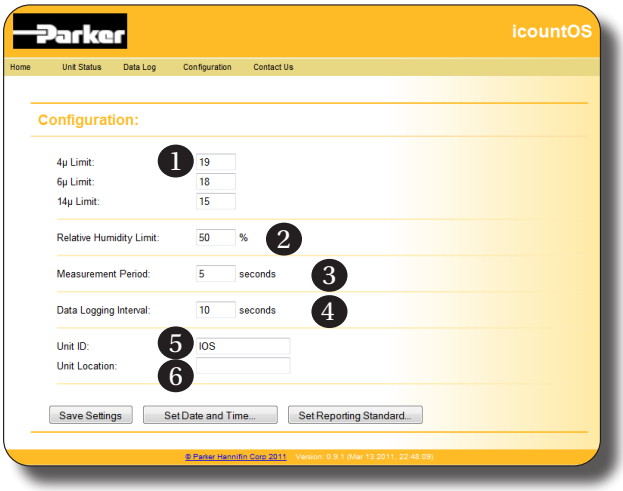

Configuration Page

Key

1. Alarm limit settings for:
   - 4µm channel
   - 6µm channel
   - 14µm channel
2. Alarm limit setting for Relative Humidity
3. Measurement period
4. Data logging interval
5. Unit name
6. Unit location

Configuration: Set Report Standard Page

Key

1. Select either the ISO4406:1999 or NAS1638 standard.
2. Confirm the selected standard.

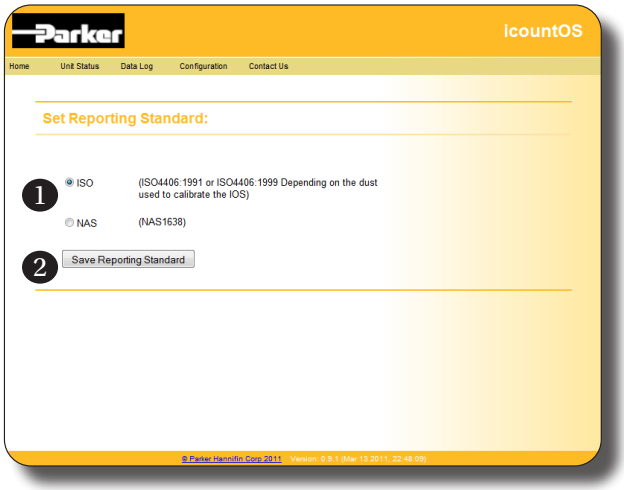

Tel: +45 63 12 83 00 | Email: ps@hymatik.com | www.hymatik.com | Hvidkaervej 27a, DK-5250 Odense SV, Denmark

icountOS

Specifications

Feature	Specification
Product start-up time	10 seconds minimum
Measurement period	Default 30 seconds run time; 15 seconds data logging time
Reporting interval	Onboard data storage every second. Output via RJ45 connection
Principle of operation	Laser diode optical detection of actual particulates
International codes range	Up to ISO 22 (+/- 1 ISO code) NAS 0-12
Calibration	Calibration by recognized online methods confirmed by the relevant ISO procedures. MTD – via a certified primary ISO 11171 automatic particle detector using ISO 11943 principles. Particle distribution reporting to ISO 4406:1999
Recalibration and Servicing	Recommended every 12 months
Working pressure	35-5000 psi (2.5–350 bar) Pressures above 35 psi require the use of a Parker Pressure Reducing Valve (PRV) – ACC6NN027
Working viscosity	1-300 cSt
Flow range through IOS	40–140ml/minute; controlled at 60ml/min by IOS's internal pump
Fluid connection interface	INLET: .236 inch (6mm) push-fit. DRAIN: .157 inch (4mm) push-fit
Ambient storage temperature for unit	–40°C to +80°C; –40°F to +176°F
Operating temperature for unit	–30°C to +80°C; –22°F to +176°F
Operating humidity range	5%RH to 100%RH
Fluid operating temperature (Oil)	+5°C to +80°C; +41°F to +176°F
Fluid operating temperature (Fuel)	–20°C to +70°C; –4°F to +158°F
Moisture sensor	Linear scale within the range 5%RH to 100%RH
Computer compatibility	IP68-rated RJ45 connection that may be connected to a laptop computer's RJ45 LAN port using the 2m cable supplied
Power requirement	Regulated power supply supplied with the unit
Certification	IP54 rating (unit open) IP67 rating (unit closed) EC Declaration of Conformity Machinery Directive EMC EN61000-6-3:2001 EMC EN61000-6-2:2001 EMC EN61010-1:2001 CE Certified

What is included?	
Offline IOS 1210 EUR/UK/US	Online IOS 1220 EUR/UK/US
1x IOS Oil Sampler Unit	1x IOS Oil Sampler Unit
+ 1x Power Supply	+ 1x Power Supply
+ 1x RJ45 LAN Cable	+ 1x RJ45 LAN Cable
+ Low Pressure Hoses	+ 1x Low Pressure Hose
	+ 1x PRV
	+ 1x High Pressure Hose

Tel: +45 63 12 83 00 | Email: ps@hymatik.com | www.hymatik.com | Hvidkaervej 27a, DK-5250 Odense SV, Denmark

icountOS

How To Order

Key	Fluid Type	Calibration	Connection	Options
IOS1220EUR	Mineral	MTD	Online	No options
IOS1210EUR	Mineral	MTD	Offline	No options

Key		Fluid Type		Calibration		Connection		Options	Region
IOS	1	**Mineral**	2	MTD	1	Offline	**0**	**No options**	**UK**
	3	Aviation fuel (4 channels*)			2	**Online**			**EUR**
									USA

*Fluid Type 3: Contact Parker Hannifin

Accessory Part Numbers

Description	Part number
Hose Kit Bag (includes one power pack, RJ45 patch cable and low pressure hose connectors) 	ACC6NN029UK ACC6NN029EUR ACC6NN029US
Pressure Reducing Valve (PRV) 	ACC6NN027 (Standard with IOS 1220)
Power Pack (UK 2m cable) 	ACC6NN040
Power Pack (EUR 2m cable) 	ACC6NN041
Power Pack (US 2m cable) 	ACC6NN042

Description	Part number
RJ45 LAN Connector Cable 	ACC6NN028
Carry Strap 	ACC6NN030 The Carry Strap option MUST be selected at the time of placing the IOS order.
Low Pressure Hoses (4mm and 6mm) 	ACC6NN031
High Pressure Hose Assembly 	ACC6NN034 (Standard with IOS 1220)
Verification Fluid 	SER.MISC.067

Tel: +45 63 12 83 00 | Email: ps@hymatik.com | www.hymatik.com | Hvidkaervej 27a, DK-5250 Odense SV, Denmark

icountMS Range

Moisture Sensors



Fast, reliable and accurate inline detection of moisture in fluids

MS moisture sensors provide fast, reliable and accurate inline detection of moisture in fluids. Technology developed for preventative maintenance programmes. MS200 is the ‘Programmable’ sensor monitoring and reporting relative humidity (RH), moisture content in oils. MS300 ‘Intrinsically safe’ sensor ATEX certified for use in hazardous Zone 0 environments.



Product Features

- MS moisture sensors provide fast, reliable and accurate inline detection of moisture in fluids.
- Technology developed for preventative maintenance programs.
- MS200 ‘Programmable’ sensor monitoring and reporting relative humidity (RH), moisture content in oils. 6,000 PSI (420 bar) MAOP.
- MS300 ‘Intrinsically safe’ sensor ATEX certificated for use in hazardous Zone 0 environments. 6,000 PSI (420 bar) MAOP.
- Temperature Outputs on all versions.

Tel: +45 63 12 83 00 | Email: ps@hymatik.com | www.hymatik.com | Hvidkaervej 27a, DK-5250 Odense SV, Denmark

icountMS Range

Features and Benefits

- Continuous, online moisture indication, for hydraulic and lubricating systems.
- Reporting of % relative humidity of water content, giving the user information on how close to the fluids real saturation point.
- Reliable data on the rate of water absorption.
- Sensing cell technology using a laser trimmed thermoset polymer, for capacitive sensing that is capable of absorbing water molecules due to its micro porous structure.
- Uses a thermistor for temperature compensation correction. Offering total confidence in reporting the %RH relative humidity over the sensors temperature range.
- A purpose designed tee adaptor allows for easy installation into an existing fluid system.
- The MS200 can also be specified with a bench top wand offering the end user greater flexibility.

Typical Applications

- Ground support vehicles
- Pulp and paper plants
- Marine hydraulics
- Power transmission & distribution
- Forestry
- Industrial hydraulics
- Earth moving applications
- Agricultural
- Hazardous Areas (Zone II)
- Simulators



In-Line Moisture Measurement of Hydraulic & Lubricating Fluids.

Parker's Moisture Sensor Range offers fast, reliable and accurate in-line detection of moisture in fluids. The MS transducer type technology has been especially designed with the preventative maintenance programme environment in mind.

The industry accepted sensing cell device will monitor and report Relative Humidity (RH), moisture content in oils. The water content measurement technique offers the end user benefits over the current standard form of water content reporting (PPM).

This allows for real time preventative maintenance to be undertaken and corrective actions to be made. By knowing that the water contamination is still within the oils absorbing range, less than 100%, reclaiming fluid properties before additive damage occurs can initiate calculable cost savings.

Tel: +45 63 12 83 00 | Email: ps@hymatik.com | www.hymatik.com | Hvidkaervej 27a, DK-5250 Odense SV, Denmark

MS200 Moisture Sensor

Specifications

% Saturation Calibration Accuracy:	+3% RH
Temperature Calibration Accuracy:	±1°C
Thermal Stability:	±1% RH (over compensated temperature range +10 to +80°C)
Stability:	±0.2% RH typical at 50% RH in 1 year
Linearity:	±0.5% RH typical
Analog Output Hysteresis:	±0.5% RH Full Scale
Switched Output Hysteresis:	2% RH
Operating Temperature Range:	-40°F to +185°F (-40°C to +85°C)
Operating Humidity Range:	5 to 100% RH (non condensing)
Response Time:	60 sec in slow moving air at 25°C
Maximum Rated Pressure:	6,000 PSI (420 Bar)
Maximum Torque:	22 ft-lbs
Seal Material (depending on MS):	Fluorocarbon, EPDM, Perfluoroelastomer
Material:	Stainless Steel 303
Connector Details:	M12x1, 8 Way, IP67 Connector (IP68 when mated with molded cable)
Maximum Cable Length:	33 ft (10 m) with Voltage Output, 330 ft (100 m) with current output
Output:	SEE ORDERING INFORMATION

Installation Details

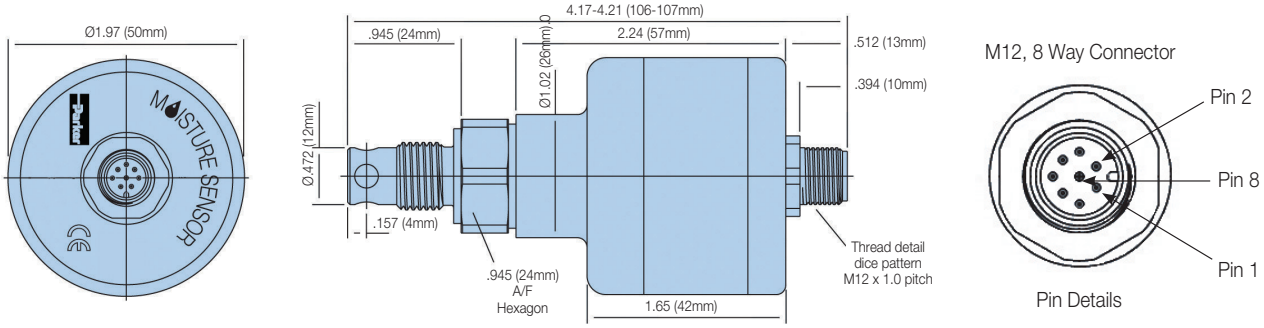

dimensions in inch (mm)

Moisture Sensor Wiring and Pin Designations

Pin	Wire Color	Designation	I/O	Description
1	White	Alarm Switch	Output	Alarm Switch. Constant 5Vdc when in normal operation. Switch to 0Vdc when in alarm condition. Red LED illuminates when Sensor is in an alarm condition.
2	Brown	Analogue	Output	Temperature - Degí Celsius. User Select Output (0-3Vdc, 0-5Vdc, 1-6Vdc and 4-20mA).
3	Green	Alarm Limit	Output	Alarm Limit (0-6V). Output that directly corresponds to the alarm set point.
4	Yellow	Analogue	Output	% Saturation. User Select Output (0-3Vdc, 0-5Vdc, 1-6Vdc and 4-20mA).
5	Grey	Receive	Input	RS232 Communication. 9 pin d shell. 9.3
6	Pink	Send	Output	RS232 Communication. 9 pin d shell. 9.2
7	Blue	Common	Input	Common (0Vdc). 9 pin d shell. 9.5 Ground from power supply.
8	Red	Supply	Input	Supply Voltage (+8 to +30Vdc). Green LED illuminates when power is properly applied.

Tel: +45 63 12 83 00 | Email: ps@hymatik.com | www.hymatik.com | Hvidkaervej 27a, DK-5250 Odense SV, Denmark

MS300 Intrinsically Safe

Specifications

Pressure:
(MAOP): 6,000 PSI (420 bar)

Operating temperature:
Minimum: -40°F (-40°C) - dependent on seal material
Maximum: +185°F (+85°C)

Flow through sensor cell:
Installed in active flowstream

Fluid compatibility:
Mineral oils, petroleum-based and Phosphate ester-Skydrol option available

Viscosity range:
Unlimited

Thread form connections:
See ordering information

Outputs:
4-20mA (current loop)

Calibration accuracy:
+/- 5% RH

Compensated thermal stability:
+/- 1% RH (+ 50°F to +176°F)

Materials:
Stainless steel 303

Sensor size/weight:
4.21in x ø1.97in/0.66 lb (107mm x ø50mm/0.3Kg)

IP ratings:
IP68 (with specified molded cable)

Developed in association with Triteq Ltd.

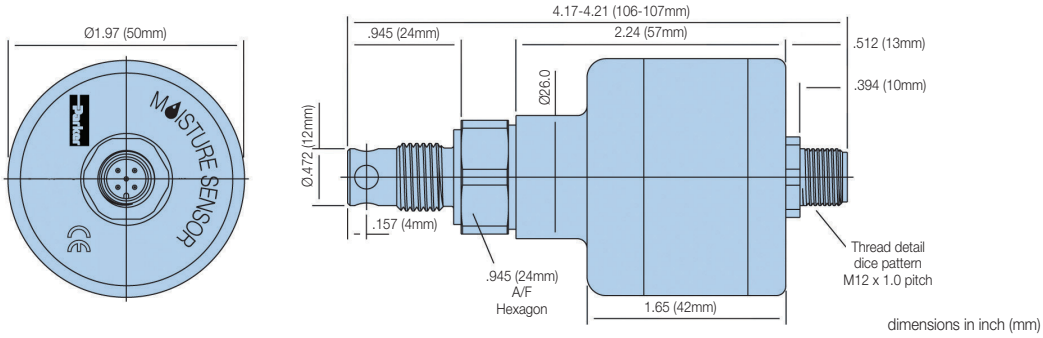

II 1G
Ga Ex ia IIB T4
0518
Sira 07ATEX2255
IECEx SIR 07.0089

Moisture Sensor Connection Diagram

1. Supply (4-20 mA - IN)	- Brown
2. Signal (4-20 mA - OUT)	- White
3. Not Used	- Blue
4. Not Used	- Black
5. Not Used	- Grey

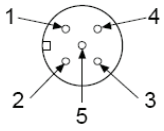

The MS300 has been certified as Intrinsically Safe Electrical Apparatus and offers fast, reliable and accurate in-line detection of moisture in fluids for use in hazardous areas.

ATEX Certification allows the MS300 into areas of a potentially explosive atmosphere, that have previously not been allowed without permits, it is intended for use in Zone 0 hazardous areas requiring the use of category 1G equipment and has been designed for use with galvanic isolators to the specified values stated below:

The electrical parameters: Ui: 28V Ii: 93mA Pi:0.65W Ci: 380nF Li: 0

The following instructions apply to MS300 - 4-20mA Current Loop Moisture Sensor covered by certificate number Sira 07ATEX2255:

1. The equipment may be located where flammable gases of Group I may be present. The equipment is only certified for use in ambient tempera tures in the range -4°F to +104°F (-20°C to +40°C) and should not be used outside this range.

2. The equipment has not been assessed as a safety-related device (as referred to by Directive 94/9/EC Annex II, clause 1.5).

3. Installation of this equipment shall be carried out by suitably trained personnel in accordance with the applicable code of practice.

4. Repair of this equipment shall be carried out by the manufacturer or in accordance with the applicable code of practice (IEC 60079-19).

Tel: +45 63 12 83 00 | Email: ps@hymatik.com | www.hymatik.com | Hvidkaervej 27a, DK-5250 Odense SV, Denmark

Moisture Sensor Displays

Specifications

Bar Graph Indicator (PBG8341A)

Construction:
Housing – nylon 6/6, window – acrylic,
bezel/board supports – ABS,
pins – phosphor bronze

Power supply:
11 – 30 Vdc

Signal input: (By dipswitch configuration)
Off – differential up to 5V
A – single signal (Ref. 0V) up to 5V
B – single signal (Ref. 1V) up to 6V

Cut out size:
45.6mm x 45.6mm

Fixing:
Push fit panel thickness 0.9mm to 3.2mm

Sealing:
Designed to IP50 standard.
(Front face may be silicon sealed after LED configuration)

Scale:
Supplied 0 to 100% in horizontal
Other scales, in volume, consult Parker Hannifin

Scaling factors:
10% to 100% range. Fully adjustable

Lamp intensity:
4mcd each

Front viewing:
Polarized

Weight:
29gms

Alternative Indicator

Description	DDU1001	DDU1002
Power supply	11 - 30 Vdc	110 - 240 Vdc
Accuracy	± 0.1% typical	± 0.1% typical
Sample rate	2.5 per second	2.5 per second
Operating temp (°C)	0 - 50	0 - 50
Storage temp (°C)	-10 to +70	-10 to +70
Display	N3.5 digit LEDA	$3^1/2$ digit LED
Power output (Vdc)	24	24
Weight (kg)	0.30	0.30
Panel cutout (mm)	93x45 ± 0.5	93x45 ±/0.5
Dimensions (mm)	48x96x93	48x96x93

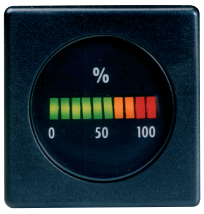

PBG8341A



DDU1001/DDU1002

Product accessories part numbers

Product Number	Supersedes	Description
DDU1001	P.9732PVC-10	Digital display unit 22-55 Vdc
DDU1002	P.9732PVC-05	Digital display unit 110-240 Vdc
PBG8341A	PBG.8341.1A	Bar Graph Indicator (+11 to +30 Vdc)
PAM8342	PAM.8342	Bar Graph alarm module
ACC6NF000	B97200	5 meter M12, 8 pin molded cable (IP68)
ACC6NF001	P973200	M12, 5 pin rewireable connector (IP65)
ACC6NF002	S970410	10 meter extension box
ACC6NE008	S970400	UK 12 volt power supply
ACC6NE009	S970400	European 12 volt power supply
ACC6NE010	S970400	US 12 volt power supply
ACC6NF003	N/A	5 meter M12, 5 pin molded cable (IP68)

Moisture sensor output setting

The Moisture sensor reports on the saturation levels of the fluid passing through the sensing cell. The output is a linear scale, reporting within the range of 5% saturation to 100% saturation.

Saturation	4–20mA	0–3Vdc	0–5Vdc
5%	4.8	0.15	0.25
25%	8	0.75	1.25
50%	12	1.50	2.50
75%	16	2.25	3.75
100%	20	3.00	5.00

Tel: +45 63 12 83 00 | Email: ps@hymatik.com | www.hymatik.com | Hvidkaervej 27a, DK-5250 Odense SV, Denmark

Ordering Information

MS200 - Product Configurator

Key	Model		Fluid Type		Output Options		Thread Forms		Connector		Future Option	
MS	**2**	Programmable	**2**	Mineral	01	0 -3 Vdc	**1**	G 1/4” BSP Bonded Seal	**1**	M12 8 Way	**0**	No
			6	Aggressive	**02**	0 - 5 Vdc	**2**	G 1/4” BSP Integral Seal				
					03	1 - 6 Vdc	**3**	R 1/4” Taper				
					04	4 - 20 mA	**4**	1/4” NPT Taper				
							5	9/16 - 18 UNF 2A Integral Seal				
							6	Hand Held Unit				
							7	G 3/8” BSP Female Swivel Equal T Adaptor				

MS300 - Product Configurator

Key	Model		Fluid Type		Output Options		Thread Forms		Connector		Future Option	
MS	**3**	Programmable	**2**	Mineral	**04**	4 - 20 mA	**1**	G 1/4” BSP Bonded Seal	**1**	5 Way	**0**	No
			6	Aggressive			2	G 1/4” BSP Integral Seal				
							3	R 1/4” Taper				
							4	1/4” NPT Taper				
							5	9/16 - 18 UNF 2A Integral Seal				
							6	G 3/8” BSP Female Swivel Equal Tee				

Tel: +45 63 12 83 00 | Email: ps@hymatik.com | www.hymatik.com | Hvidkaervej 27a, DK-5250 Odense SV, Denmark

Oilcheck

Hand-held Oil Condition Monitor



Portable and battery powered for ‘go-anywhere’ monitoring

Hand-held condition monitor provides a visual comparison between new and used oils

Parker’s Oilcheck is completely portable and battery powered with a numerical display that indicates positive or negative increase in dielectrics. Oilcheck gives an early warning of impending failure and the simplistic hand-held design makes it easy to use.



Product Features

- Oilcheck hand-held condition monitor provides a visual comparison between new and used oils.
- Completely portable and battery powered.
- Numerical display shows positive or negative increase in dielectrics.
- Gives early warning of impending failure.

Tel: +45 63 12 83 00 | Email: ps@hymatik.com | www.hymatik.com | Hvidkaervej 27a, DK-5250 Odense SV, Denmark

Oilcheck

Features & Benefits

- A comparator between new and used oils.
- Oilcheck gives early warning of impending failure.
- Cost effective solution to save money and help improve system reliability.
- Completely portable, battery powered.
- Ideal for reliability, engineers, and maintenance personnel.
- Numerical display to show positive or negative increase in dielectrics.

Using Oilcheck

Following the simple sampling procedure. Parker's Oilcheck will ensure effective and highly repeatable results. Once a clean oil sample has been placed in the 'Sensor Well' and the 'TEST' button has been pressed, the instrument will 'zero' on the sample.

Once cleaned out with a suitable solvent, such as petroleum ether, and replaced by a contaminated sample, a new reading is obtained on the LCD, which can be easily compared against the green/amber/red efficiency scale.

Typical Applications

- Fleet Maintenance Garages
- Construction equipment maintenance
- Plant maintenance

The Oilcheck from Parker detects and measures the dielectric constant of oil, by comparing the measurements obtained from used and unused oils of the same brand.

Used as a regular service monitoring instrument, the Oilcheck will give the user warning of fluid degradation and promote increased system component life.



Tel: +45 63 12 83 00 | Email: ps@hymatik.com | www.hymatik.com | Hvidkaervej 27a, DK-5250 Odense SV, Denmark

Oilcheck

Specifications

Case construction:
ABS

Circuitry:
Microprocessor control

Battery:
1 x 9V alkaline (supplied)

Display:
LCD

Suitable oil types:
Mineral and synthetic based oils

Repeatability:
Better than 5%

Readout:
Green/amber/red grading, Numerical value (0-100%)

Battery lifetime:
>150 hours or 3,000 tests

Dimensions:
9.8” x 3.7” x 1.3” (250mm x 95mm x 34mm)

Weight:
0.4kg

Using Oilcheck



Green/amber/red numerical value



Function buttons

The Oilcheck can remove the need for costly and time consuming laboratory analysis of mineral and synthetic oils used in hydraulics, gear boxes, bearing lubrication systems, and engines. It detects wear debris and any loss of lubricating properties in the oil.

The Oilcheck is able to show changes in the oil condition brought about by the ingress of water content, metallic content, and fuel contamination.

Installation Details

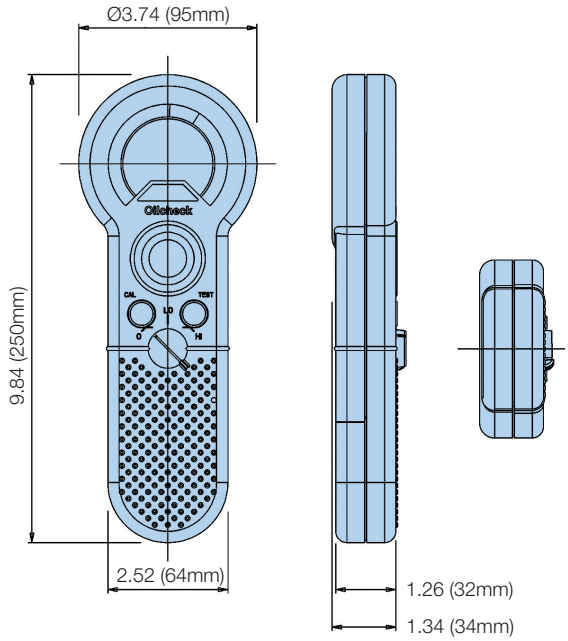

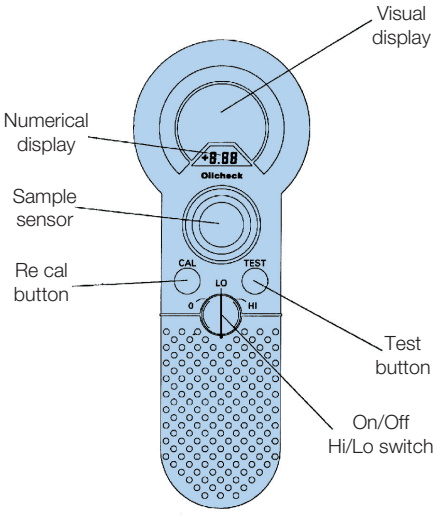

dimensions in inch (mm)

Ordering Information

Standard products table

Product Number	Description
OLK605	Oilcheck kit with numerical readout

Note: Petroleum ether can be used as a between sample cleaner.

Tel: +45 63 12 83 00 | Email: ps@hymatik.com | www.hymatik.com | Hvidkaervej 27a, DK-5250 Odense SV, Denmark





aerospace
climate control
electromechanical
filtration
fluid & gas handling
hydraulics
pneumatics
process control
sealing & shielding





Kittiwake

Condition Monitoring Products



Parker

ENGINEERING YOUR SUCCESS.

Tel: +45 63 12 83 00 | Email: ps@hymatik.com | www.hymatik.com | Hvidkaervej 27a, DK-5250 Odense SV, Denmark

ANALEXfdMplus

The ANALEXfdMplus is a highly accurate ferrous debris monitor designed to measure ferrous wear metal particle contamination in an oil sample.

The ANALEXfdMplus is a highly accurate instrument designed to measure ferrous wear metal particle contamination in an oil sample. The ANALEXfdMplus utilizes a unique sample adaptor system to measure from any of the following sample sources:

- 50ml Bottle
- 10ml Syringe
- 5ml Syringe
- 5ml Test Tube
- 4ml Grease Pots

The ANALEXfdMplus measures ferrous wear debris in oil or grease samples taken from a variety of types of machinery. Suitable for field and laboratory use, the ANALEXfdMplus provides the ability to successfully monitor equipment, preventing costly machinery downtime.

Contained in a fully portable case, it's rugged design is ideal for testing and analyzing oil samples both in the laboratory, or in the field. Supplied with an optical 12 V convertor, it is ideal for use in remote locations where full laboratory analysis is not possible. Samples may be presented for measurement using a variety of sample apertures, offering you full fiexibility of use. Ferrous debris is measured directly from the oil or grease in the sample container, providing a quick, simple, and clean method of analysis.

Data from each test is stored in the internal memory, which may then be transferred to a host PC via a RS232 interface. Data can then be fully analyzed and trends easily monitored by importing into a database.

Data Entry

Data entry is via a simple and intuitive touch pad screen, with full alphanumeric keypad and backlit graphics display, for clear user prompts and easy viewing of results. The following parameters can be recorded:

- Automatic date and time linked to each equipment or sample number.
- Equipment number or identification.
- Sample number or identification.
- Lubricant hours (0 - 999999 hrs).

The results are shown in a tabular display and in graphical format to enable trending by machine or equipment number.



Specifications

Measurement Range (approx. PPM)	50ml Bottle: 0 - 2500ppm 10ml Syringe: 0 - 19000ppm 5ml Syrings: 0 - 34000ppm 5ml Tube: 0 - 28000ppm 4ml Grease Pot: 0 - 8000ppm
Display Resolution	1 ppm
Sample Sources	50ml Sample Bottles, 10ml Syringes, 5ml Syringes & Test Tubes, 4ml Grease Pots
Test Time	< 1 minute to stabilize from power on < 15 seconds per sample
Power	110 - 250 VAC autoselected 50/60 Hz
Fuse Rating	2.5 A 250 VAC HRC A/S T ceramic
Operating Temp. Range	60°F - 104°F (15°C - 40°C)
Weight	9.30 lb (4.22 kg)

Ordering Information

Part Number	Quantity	Description
FGK17144PA	1	Includes calibration and check standards, power adaptor, RS232 connector, sample adaptors, and a range of sample sources.
FGK14946PA	360	50ml Sample Bottles
FGK15005PA	3000	Grease Pots
FGK17074PA	1000	5ml Test Tubes
FGK17075PA	500	10ml Syringes
FGK17076PA	500	5ml Syringes
FGK17725PA	360	50ml Sample Bottles with Grease Thief Starter Pack & Calibration Standards

Tel: +45 63 12 83 00 | Email: ps@hymatik.com | www.hymatik.com | Hvidkaervej 27a, DK-5250 Odense SV, Denmark

DIGI Field Kit

The DIGI Field Test Kit gives fast, accurate results for water in oil, total base number, total acid number, insolubles (soot), and comparitive viscosity.

Total Acid Number (TAN)
Testing for TAN is essential to maintain and protect your equipment, preventing damage in advance.

Both the weak organic and strong inorganic acids present within an oil can be measured with the TAN test. A rise in TAN is indicative of oil oxidation due to time or operating temperature.

- Test kit is supplied with up to fifty tests, enabling monitoring of TAN level trends.
- Simple to use drop test - the result is shown by a color change, providing easy to interpret results, suitable for use by non-technical personnel.

Viscosity
The Viscostick gives a simple "go/no-go" result. Typically it will detect 5-10% distillate fuel dilution of an SAE 30 to 40 engine oil as well as increases in viscosity due to oil contamination.



Insolubles (soot)
Monitor combustion related debris and oxidation products.

High insolubles will cause varnish formation on hot surfaces, sticking of piston rings, and wear of cylinder liner and bearing surfaces. The detergent property of the oil will also decrease, speeding further deterioration.

- Detect insolubles from diesel engine combustion products such as fuel ash, carbon, partially oxidized fuel, oil oxidation products and spent lubricant additive.
- Simple and quick to use, the insolubles tests provide accurate results, helping prevent engine damage.

Reagents, Spares and Consumables
Test kits for individual parameters contain reagents, consumables and full instructions for multiple tests.

- Replacement reagents can be ordered at short notice.
- Kits contain all necessary equipment for instant test results in the field.

Reagents are packed in accordance with IATA/IMDG/IRD Air/Marine/Road Transportation codes and can be delivered to major ports world-wide.

Water in Oil
Maintain and protect your equipment, while eliminating damage caused by water in oil.

- Prevent corrosion, cavitation or failure of your machinery by detecting water in oil, before any damage occurs.
- Minimize instability of additive packages and damaging microbe growth by monitoring your oil.
- Fully portable for use on-board or in the field, test cells are extremely robust, durable and easy to use.

Total Base Number (TBN)
The DIGI TBN Test Kit provides state of the art, digital analysis and gives fast, accurate results for in-depth monitoring of trends.

The TBN Test Kit gives a rapid indication of TBN depletion in lubricants.

- Avoid fouling within the engine and corrosion of engine components by monitoring the Total Base Number (TBN) of lubricating oils.
- Simple, economical monitoring of lubricants.

Specifications

Test	Description
Combined Water in Oil/TBN Cell	0.02-1%, 200-10000 ppm, 0-10%, 0-20%/0-80 TBN
Insolubles	Qualitative
Viscostick	Go/no-go
TAN	0-3 range +/- 0.3

Ordering Information

Part Number	Description
FGK1108PA	DIGI Field Kit
FG24743PA	TAN Drop Test Kit
FGK2002PA	TBN Reagent Pack (50)
FGK1006PA	Insolubles Kit

Tel: +45 63 12 83 00 | Email: ps@hymatik.com | www.hymatik.com | Hvidkaervej 27a, DK-5250 Odense SV, Denmark

Low Range DIGI Water Kit

The DIGI Test Cell provides simple, accurate results for water in oil.

With an easy to read digital display providing instructions and results, a five year (10,000 tests) battery life and built in memory for recording previous test results, the DIGI Cell has become a favored test method world-wide for on-site and on-board testing.





Water in Oil

Maintain and protect your equipment, while eliminating damage caused by water in oil.

- Prevent corrosion, cavitation or failure of your machinery by detecting water in oil, before any damage occurs.
- Minimize instability of additive packages and damaging microbe growth by monitoring your oil.
- Fully portable for use on-board or in the field, test cells are extremely robust, durable and easy to use.

Reagents, Spares and Consumables

Test kits for individual parameters contain reagents, consumables and full instructions for multiple tests.

- Replacement reagents can be ordered at short notice.
- Kits contain all necessary equipment for instant test results in the field.
- Reagents are packed in accordance with IATA/ IMDG/IRD Air/Marine/Road Transportation codes and can be delivered to major ports world-wide.

Specifications

Ranges	200-3000 ppm .02 - 1% 0 - 10%
Test Time	3 Minutes
Battery Life	Five years (10,000 tests)

Ordering Information

Part Number	Description
FGK17032PA	Low Range DIGI Water Kit
FGK2101PA	Water in Oil Reagent Pack (50)

Tel: +45 63 12 83 00 | Email: ps@hymatik.com | www.hymatik.com | Hvidkaervej 27a, DK-5250 Odense SV, Denmark

Heated Viscometer

Make fast on-site maintenance decisions with Parker's Heated Viscometer. Accurate oil viscosity results in minutes.

The Parker Heated Viscometer provides a condition monitoring tool that enables you to make informed operational and maintenance decisions about your critical plant and equipment. Fuel and lubricating oils form a major cost element in the operation of almost all industrial machinery and engines; the quality must be closely monitored to protect the investment. The ability to test on-site, at the point of use, enables engineers and facilities managers to conduct oil analysis quickly and easily. Detecting out-of-spec fuels or lubricants can identify potential problems before equipment damage occurs.

Viscosity is regarded as an oil's most important characteristic. It is the viscosity that gives the oil's resistance to flow and the strength of the oil film between surfaces. Viscosity can increase or decrease as a result of problems such as contamination, fuel dilution, and shear thinning. Measurement of viscosity is extremely important for hydraulic oils, diesel engine oils, gear, and fuel oils.





The heated viscometer measures a specific temperature point and is designed to 'tilt' from side to side in both directions, allowing the internal rolling ball to fall under gravity, enabling the viscosity of the oil to be calculated automatically.

- Monitoring viscosity gives an early warning for potential fluid issues.
- Highly accurate results with two readings are available at 40°C, 50°C or 100°C.
- Test an even greater range of oils, by changing the viscosity index or density.
- Estimate the combustion performance (CCAI) of fuel oil.
- Heavy duty, robust equipment - ideal for long term use with fast and accurate results.

Specifications

Range	Calculated viscosity in cSt at 40°C, 50°C or 100°C, Calculated Carbon Aromaticity Index (CCAI)
Display	8 Digit LED
Keypad	Membrane type with tactile buttons
Power	110 to 240 AC 50/60 Hz

Ordering Information

Part Number	Description
FGK1200PA	Test kit contains Heated Viscometer, power supply and all consumables in a portable robust metal case.
ASK11097	Viscometer End Plug
ASK11098	Viscometer End Cap
BIK10004	Viscometer Ball Strainer
BIK10307	Viscometer Balls

Tel: +45 63 12 83 00 | Email: ps@hymatik.com | www.hymatik.com | Hvidkaervej 27a, DK-5250 Odense SV, Denmark

MHC Bearing Checker

Parker's MHC* Bearing Checker is a new, unique hand-held instrument, providing maintenance engineers with an easy-to-operate, simple to use, and quick method of analyzing bearing condition and lubrication state.

The MHC Bearing Checker monitors high frequency Acoustic Emissions (AE) signals naturally generated by deterioration in rotating machinery. The unique way of detecting and processing these signals provides condition-related information in the easiest possible form. It is a state-of-the-art condition monitoring instrument with extreme sensitivity to developing faults.

How Does it Work?

As the mechanical condition of machinery deteriorates, energy loss processes such as impacts, friction, and crushing generate sound wave activity that spans a broad range of frequencies. By detecting only the high frequency part of this signal with special AE sensors, it is possible to detect miniscule amounts of activity (e.g. a slight rub, a brief impact, or the crushing of a single particle in the lubricant). The patented MHC sensor gives improved repeatability and is remarkably rugged. A magnetic front face allows easy attachment to multiple machines.

Easy to Use and Interpret for Quick Analysis

Simply attach the unit via the magnetic sensor head and within 10 seconds both dB Level and Distress® values will be displayed. dB Level is an indication of the overall noise of the bearing and is dependent on speed. It increases with speed of rotation, but also with degradation of the bearing or inadequate lubrication. Distress® gives an instant indication of the state of the bearing's health. A reading below 10 generally indicates normal operation, higher than 10 is usually indicative of bearing damage or the need for attention. Distress® and dB Level are the fundamental parameters of the pocket-sized MHC Bearing Checker.

The unit is powered by an internal rechargeable battery, offering up to 1000 measurements between charges. Recharging is accomplished through a micro USB port.

Ordering Information

Part Number	Description
FGH11510PA	MHC Bearing Checker

Specifications

Sensor	
Sensing Element	Resonant piezoelectric at 100 kHz
Calibration	Factory set

Signal Measurement	Description	Range	Resolution
Distress® (dst)	Fault indicating parameter	0 to 40	1 unit
dB Level (dB)	Logarithmically scaled mean signal level	10 to 80 dB	1 dB

Features	
Display	LCD, 2 lines by 8 characters
Distress® Display	Numeric or Text ("OK" if <10, "Suspect" if between 10 & 15, "Poor" if > 15)
Reading in progress	Flashing LED indicator (in addition to LCD display message)
Non-Volatile Memory	Shows last taken readings when unit is switched on
Auto Shut-Off	Instrument auto switches off 30 seconds after last button press
Internal Batteries	NiMH rechargeable battery via micro USB port - Typically over 1000 measurements between charges
Operating Temperature	0°C to 65°C
Overall Dimensions	3.86 in (98 mm) x 2.44 in (62 mm) x 1.34 in (34 mm)
Weight	7.94 ounce (225 g)



*MHC - Machinery Health Check

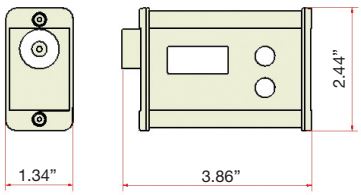

Features and Benefits

- Last Measurement Recall
- Simple One-Handed Operation
- Rechargeable through USB Port
- Ease of Operation

Tel: +45 63 12 83 00 | Email: ps@hymatik.com | www.hymatik.com | Hvidkaervej 27a, DK-5250 Odense SV, Denmark

Guide to Contamination Standards

This guidebook is aimed at engineers, technicians and quality control personnel involved in contamination control. Its purpose is to make available accepted and widely-used cleanliness specification levels for liquid samples.

The tables in this guide allow users of using automatic portable particle counters to see the relationship between raw particle counts at various sizes and the reporting code numbers of various contamination standards.

A NOTE ON THE FIGURES USED

Note that some of the table entries are defined as cumulative counts (e.g. "> 6µm") and others are defined as differential counts (e.g. 6–14µm").

Instances of particle sizes given as "µm" refer to ACFTD (i.e. Air Cleaner Fine Test Dust) distributions. Instances of particle sizes given as "µm(c)" refer to MTD (i.e. ISO Medium Test Dust) distributions.

All standards are in counts per volume, and provide easy methods for converting particle counts into limits that are simple to interpret. By noting the requirements of the standard, particle counts can be accurately converted to contamination levels.

Tel: +45 63 12 83 00 | Email: ps@hymatik.com | www.hymatik.com | Hvidkaervej 27a, DK-5250 Odense SV, Denmark

ISO Cleanliness Code

Hydraulic Fluid Contamination

ISO code number	Number of particles per ml	
	More than	Up to and including
22	20,000	40,000
21	10,000	20,000
20	5,000	10,000
19	2,500	5,000
18	1,300	2,500
17	640	1,300
16	320	640
15	160	320
14	80	160
13	40	80
12	20	40
11	10	20
10	5	10
9	2.5	5
8	1.3	2.5
7	0.64	1.3

Suggested Acceptable Contamination Codes

ISO code numbers	Type of system	Typical components	Sensitivity
23 / 21 / 17	Low pressure systems with large clearances	Ram pumps	Low
20 / 18 / 15	Typical cleanliness of new hydraulic oil straight from the manufacturer. Low pressure heavy industrial systems or applications where long-life is not critical	Flow control valves Cylinders	Average
19 / 17 / 14	General machinery and mobile systems Medium pressure, medium capacity	Gear pumps/motors	Important
18 / 16 / 13	World Wide Fuel Charter cleanliness standard for diesel fuel delivered from the filling station nozzle. High quality reliable systems General machine requirements	Valve and piston pumps/ motors Directional and pressure control valves	Very important
17 / 15 / 12	Highly sophisticated systems and hydrostatic transmissions	Proportional valves	Critical
16 / 14 / 11	Performance servo and high Pressure long-life systems e.g. Aircraft machine tools, etc.	Industrial servovalves	Critical
15 / 13 / 09	Silt sensitive control system with very high reliability Laboratory or aerospace	High performance servovalves	Super critical

NOTE: The three figures of the ISO code numbers represent ISO level contamination grades for particles of >4µm(c), >6µm(c) and >14µm(c) respectively.

Tel: +45 63 12 83 00 | Email: ps@hymatik.com | www.hymatik.com | Hvidkaervej 27a, DK-5250 Odense SV, Denmark

NAS 1638 Table

The NAS 1638 cleanliness standard was developed for aerospace components in the US and is still widely used for industrial and aerospace fluid power applications.

The figures are differential counts, and the NAS class is usually reported as a single figure representing the maximum allowed particle counts (i.e. worst case) for designated particle size ranges.

Size range		5–15 µm	15–25 µm	25–50 µm	50–100 µm	>100 µm
NAS classes (based on maximum contamination limits, particles per 100ml)	00	125	22	4	1	0
	0	250	44	8	2	0
	1	500	89	16	3	1
	2	1,000	178	32	6	1
	3	2,000	356	63	11	2
	4	4,000	712	126	22	4
	5	8,000	1,425	253	45	8
	6	16,000	2,850	506	90	16
	7	32,000	5,700	1,012	180	32
	8	64,000	11,400	2,025	360	64
	9	128,000	22,800	4,050	720	128
	10	256,000	45,600	8,100	1,440	256
	11	512,000	91,000	16,200	2,880	512
	12	1,024,000	182,400	32,400	5,760	1,024

SAE AS4059 rev E Table

Note that this standard is technically identical to ISO 11218.

	Maximum contamination limits (particles per ml)					
MTD	>4µm(c)	>6µm(c)	>14µm(c)	>21µm(c)	>38µm(c)	>70µm(c)
ACFTD	>2µm	>5µm	>15µm	>25µm	>50µm	>100µm
Size code	A	B	C	D	E	F
000	195	76	14	3	1	0
00	390	152	27	5	1	0
0	780	304	54	10	2	0
1	1,560	609	109	20	4	1
2	3,120	1,220	217	39	7	1
3	6,250	2,430	432	76	13	2
4	12,500	4,860	864	152	26	4
5	25,000	9,730	1,730	306	53	8
6	50,000	19,500	3,460	612	106	18
7	100,000	38,900	6,920	1,220	212	32
8	200,000	77,900	13,900	2,450	424	64
9	400,000	156,000	27,700	4,900	848	128
10	800,000	311,000	55,400	9,800	1,700	256
11	160,000	623,000	111,000	19,600	3,390	512
12	320,000	1,250,000	222,000	39,200	6,780	1,024

MTD ISO11171 (Calibration or optical microscope count – particle size based on projected area equivalent diameter)

ACFTD ISO4402 (Calibration or optical microscope count – particle size based on longest dimension)

Tel: +45 63 12 83 00 | Email: ps@hymatik.com | www.hymatik.com | Hvidkaervej 27a, DK-5250 Odense SV, Denmark

GOST 17216-2001 Table

The GOST standard is developed by the Technical Committee of Standardization TK 184 “Ensuring Industrial Cleanliness” introduced by the Government of Russia.

Adopted by the Inter-governmental Committee of Standardization Metrology and Certification (Protocol No. 19 dated 24 May 2001).

Size range		5–10µm	10–25µm	25–50µm	50–100µm	>100µm
Particle contamination level by class (particles per 100ml)	00	8	4	1	0	0
	0	16	8	2	0	0
	1	32	16	3	0	0
	2	63	32	4	1	0
	3	125	63	8	2	0
	4	250	125	12	3	0
	5	500	250	25	4	1
	6	1,000	500	50	6	2
	7	2,000	1,000	100	12	4
	8	4,000	2,000	200	25	6
	9	8,000	4,000	400	50	12
	10	16,000	8,000	800	100	25
	11	31,500	16,000	1,600	200	50
	12	63,000	31,500	3,150	400	100
	13	–	63,000	6,300	800	200
	14	–	125,000	12,500	1,600	400
	15	–	–	25,000	3,150	800
	16	–	–	50,000	6,300	1,600
	17	–	–	–	125,000	3,150

NAV AIR 10-1A-17 Table

The Navy Standard for Hydraulic Fluids used for aircraft hydraulic systems is defined in the Aviation Hydraulics Manual (1989), Table 2-1, Navy Standard for Particulate Cleanliness.

NAVY STANDARD FOR HYDRAULIC FLUIDS – USED FOR AIRCRAFT HYDRAULIC SYSTEMS

Particle Contamination Level by Class							
Particle size in µm	0	1	2	3	4	5	6
	Number of particles per 100ml						
5–10	2,700	4,600	9,700	24,000	32,000	87,000	128,000
10–25	670	1,340	2,680	5,360	10,700	21,400	42,000
25–50	93	210	380	780	1,510	3,150	6,500
50–100	16	28	56	110	225	430	1000
>100	1	3	5	11	21	41	92

Tel: +45 63 12 83 00 | Email: ps@hymatik.com | www.hymatik.com | Hvidkaervej 27a, DK-5250 Odense SV, Denmark

ISO/NAS/SAE Code Comparison Table

The comparisons relate to particle count data only. To conform to any particular standard, reference should be made to the recommended experimental procedure.

ISO/DIS 4406 BS 5540/4 codes	Defense Std. 05/42		NAS 1638	SAE 749
	Table A	Table B		
13 / 11 / 08			2	
14 / 12 / 09			3	0
15 / 13 / 10			4	1
16 / 14 / 09		400F		
16 / 14 / 11			5	2
17 / 15 / 09	400			
17 / 15 / 10		800F		
17 / 15 / 12			6	3
18 / 16 / 10	800			
18 / 16 / 11		1300F		
18 / 16 / 13			7	4
19 / 17 / 11	1300	2000		
19 / 17 / 14			8	5
20 / 18 / 12	2000			
20 / 18 / 13		4400F		
20 / 18 / 15			9	6
21 / 19 / 13	4400	6300F		
21 / 19 / 16			10	
22 / 20 / 13	6300			
22 / 20 / 17			11	
23 / 21 / 14	15,000			
23 / 21 / 18			12	
24 / 22 / 15	21,000			
25 / 23 / 17	100,000			

PPM Conversion Table

Percent contamination vs. PPM (parts per million)	
Percent	**PPM**
100%	1,000,000
10%	100,000
1%	10,000
0.1%	1,000
0.01%	100
0.001%	10

Volume	
1 litre	= 1 000 ml
1 PPM	= 1 µl in 1 litre
Example 1	
400 PPM in 1 litre	= 400 µl
Example 2	
A reading of 250 PPM equates to a quantity of absorbed water in a 400 litre capacity system of 0.1 litre.	

Tel: +45 63 12 83 00 | Email: ps@hymatik.com | www.hymatik.com | Hvidkaervej 27a, DK-5250 Odense SV, Denmark

Offer of Sale

1. Definitions. As used herein, the following terms have the meanings indicated.

Buyer:	means any customer receiving a Quote for Products from Seller.
Goods:	means any tangible part, system or component to be supplied by the Seller.
Products:	means the Goods, Services and/or Software as described in a Quote provided by the Seller.
Quote:	means the offer or proposal made by Seller to Buyer for the supply of Products.
Seller:	means Parker-Hannifin Corporation, including all divisions and businesses thereof.
Services:	means any services to be supplied by the Seller.
Software:	means any software related to the Products, whether embedded or separately downloaded.
Terms:	means the terms and conditions of this Offer of Sale or any newer version of the same as published by Seller electronically at www.parker.com/saleterms.

2. Terms. All sales of Products by Seller are contingent upon, and will be governed by, these Terms and, these Terms are incorporated into any Quote provided by Seller to any Buyer. Buyer's order for any Products whether communicated to Seller verbally, in writing, by electronic date interface or other electronic commerce, shall constitute acceptance of these Terms. Seller objects to any contrary or additional terms or conditions of Buyer. Reference in Seller's order acknowledgement to Buyer's purchase order or purchase order number shall in no way constitute an acceptance of any of Buyer's terms of purchase. No modification to these Terms will be binding on Seller unless agreed to in writing and signed by an authorized representative of Seller.

3. Price; Payment. The Products set forth in Seller's Quote are offered for sale at the prices indicated in Seller's Quote. Unless otherwise specifically stated in Seller's Quote, prices are valid for thirty (30) days and do not include any sales, use, or other taxes or duties. Seller reserves the right to modify prices at any time to adjust for any raw material price fluctuations. Unless otherwise specified by Seller, all prices are F.C.A. Seller's facility (INCOTERMS 2010). All sales are contingent upon credit approval and payment for all purchases is due thirty (30) days from the date of invoice (or such date as may be specified in the Quote). Unpaid invoices beyond the specified payment date incur interest at the rate of 1.5% per month or the maximum allowable rate under applicable law.

4. Shipment; Delivery; Title and Risk of Loss. All delivery dates are approximate. Seller is not responsible for damages resulting from any delay. Regardless of the manner of shipment, delivery occurs and title and risk of loss or damage pass to Buyer, upon placement of the Products with the shipment carrier at Seller's facility. Unless otherwise agreed, Seller may exercise its judgment in choosing the carrier and means of delivery. No deferment of shipment at Buyers' request beyond the respective indicated shipping date will be made except on terms that will indemnify, defend and hold Seller harmless against all loss and additional expense. Buyer shall be responsible for any additional shipping charges incurred by Seller due to Buyer's acts or omissions.

5. Warranty. The warranty related to the Products is as follows: (i) Goods are warranted against defects in material or workmanship for a period of twelve (12) months from the date of delivery or 2,000 hours of use, whichever occurs first; (ii) Services shall be performed in accordance with generally accepted practices and using the degree of care and skill that is ordinarily exercised and customary in the field to which the Services pertain and are warranted for a period of six (6) months from the completion of the Services by Seller; and (iii) Software is only warranted to perform in accordance with applicable specifications provided by Seller to Buyer for ninety (90) days from the date of delivery or, when downloaded by a Buyer or end-user, from the date of the initial download. All prices are based upon the exclusive limited warranty stated above, and upon the following disclaimer: **DISCLAIMER OF WARRANTY: THIS WARRANTY IS THE SOLE AND ENTIRE WARRANTY PERTAINING TO PRODUCTS. SELLER DISCLAIMS ALL OTHER WARRANTIES, EXPRESS AND IMPLIED, INCLUDING DESIGN, NONINFRINGEMENT, MERCHANTABILITY, AND FITNESS FOR A PARTICULAR PURPOSE. SELLER DOES NOT WARRANT THAT THE SOFTWARE IS ERROR-FREE OR FAULT-TOLERANT, OR THAT BUYER'S USE THEREOF WILL BE SECURE OR UNINTERRUPTED. BUYER AGREES AND ACKNOWLEDGES THAT UNLESS OTHERWISE AUTHORIZED IN WRITING BY SELLER THE SOFTWARE SHALL NOT BE USED IN CONNECTION WITH HAZARDOUS OR HIGH RISK ACTIVITIES OR ENVIRONMENTS. EXCEPT AS EXPRESSLY STATED HEREIN, ALL PRODUCTS ARE PROVIDED "AS IS".**

6. Claims; Commencement of Actions. Buyer shall promptly inspect all Products upon receipt. No claims for shortages will be allowed unless reported to the Seller within ten (10) days of delivery. Buyer shall notify Seller of any alleged breach of warranty within thirty (30) days after the date the non-conformance is or should have been discovered by Buyer. Any claim or action against Seller based upon breach of contract or any other theory, including tort, negligence, or otherwise must be commenced within twelve (12) months from the date of the alleged breach or other alleged event, without regard to the date of discovery.

7. LIMITATION OF LIABILITY. IN THE EVENT OF A BREACH OF WARRANTY, SELLER WILL, AT ITS OPTION, REPAIR OR REPLACE THE NON-CONFORMING PRODUCT, RE-PERFORM THE SERVICES, OR REFUND THE PURCHASE PRICE PAID WITHIN A REASONABLE PERIOD OF TIME. **IN NO EVENT IS SELLER LIABLE FOR ANY SPECIAL, INDIRECT, INCIDENTAL OR CONSEQUENTIAL DAMAGES ARISING OUT OF, OR AS THE RESULT OF, THE SALE, DELIVERY, NON-DELIVERY, SERVICING, NON-COMPLETION OF SERVICES, USE, LOSS OF USE OF, OR INABILITY TO USE THE PRODUCTS OR ANY PART THEREOF, LOSS OF DATA, IDENTITY, PRIVACY, OR CONFIDENTIALITY, OR FOR ANY CHARGES OR EXPENSES OF ANY NATURE INCURRED WITHOUT SELLER'S WRITTEN CONSENT, WHETHER BASED IN CONTRACT, TORT OR OTHER LEGAL THEORY. IN NO EVENT SHALL SELLER'S LIABILITY UNDER ANY CLAIM MADE BY BUYER EXCEED THE PURCHASE PRICE PAID FOR THE PRODUCTS.**

8. Loss to Buyer's Property. Any designs, tools, patterns, materials, drawings, confidential information or equipment furnished by Buyer or any other items which are or become Buyer's property, will be considered obsolete and may be destroyed by Seller after two (2) consecutive years have elapsed without Buyer ordering the Products manufactured using such property. Seller shall not be responsible for any loss or damage to such property while it is in Seller's possession or control.

9. Special Tooling. Special Tooling includes but is not limited to tooling, jigs, fixtures and associated manufacturing equipment acquired or necessary to manufacture Products. A tooling charge may be imposed for any Special Tooling. Such Special Tooling shall be and remain Seller's property notwithstanding payment of any charges by Buyer. In no event will Buyer acquire any interest in Special Tooling belonging to Seller that is utilized in the manufacture of the Products, even if such Special Tooling has been specially converted or adapted for such manufacture and notwithstanding any charges paid by Buyer. Unless otherwise agreed, Seller has the right to alter, discard or otherwise dispose of any Special Tooling or other property in its sole discretion at any time.

10. Security Interest. To secure payment of all sums due, Seller retains a security interest in all Products delivered to Buyer and, Buyer's acceptance of these Terms is deemed to be a Security Agreement under the Uniform Commercial Code. Buyer authorizes Seller as its attorney to execute and file on Buyer's behalf all documents Seller deems necessary to perfect its security interest.

11. User Responsibility. The Buyer through its own analysis and testing, is solely responsible for making the final selection of the Products and assuring that all performance, endurance, maintenance, safety and warning requirements of the application of the Products are met. The Buyer must analyze all aspects of the application and follow applicable industry standards, specifications, and other technical information provided with the Product. If Seller provides Product options based upon data or specifications provided by the Buyer, the Buyer is responsible for determining that such data and specifications are suitable and sufficient for all applications and reasonably foreseeable uses of the Products. In the event the Buyer is not the end-user, Buyer will ensure such end-user complies with this paragraph.

12. Use of Products, Indemnity by Buyer. Buyer shall comply with all instructions, guides and specifications provided by Seller with the Products. **Unauthorized Uses.** If Buyer uses or resells the Products for any uses prohibited in Seller's instructions, guides or specifications, or Buyer otherwise fails to comply with Seller's instructions, guides and specifications, Buyer acknowledges that any such use, resale, or non-compliance is at Buyer's sole risk. Buyer shall indemnify, defend, and hold Seller harmless from any losses, claims, liabilities, damages, lawsuits, judgments and costs (including attorney fees and defense costs), whether for personal injury, property damage, intellectual property infringement or any other claim, brought by or incurred by Buyer, Buyer's employees, or any other person, arising out of: (a) improper selection, application, design, specification or other misuse of Products provided by Seller; (b) any act or omission, negligent or otherwise, of Buyer; (c) Seller's use of patterns, tooling, equipment, plans, drawings, designs or specifications or other information or things furnished by Buyer; (d) damage to the Products from an external cause, repair or attempted repair by anyone other than Seller, failure to follow instructions, guides and specifications provided by Seller, use with goods not provided by Seller, or opening, modifying, deconstructing or tampering with the Products for any reason; or (e) Buyer's failure to comply with these Terms. Seller shall not indemnify Buyer under any circumstance except as otherwise provided in these Terms.

13. Cancellations and Changes. Buyer may not cancel or modify any order for any reason, except with Seller's written consent and upon terms that will indemnify, defend and hold Seller harmless against all direct, incidental and consequential loss or damage. Seller, at any time, may change Product features, specifications, designs and availability.

14. Limitation on Assignment. Buyer may not assign its rights or obligations without the prior written consent of Seller.

15. Force Majeure. Seller does not assume the risk and is not liable for delay or failure to perform any of Seller's obligations by reason of events or circumstances beyond its reasonable control ("Events of Force Majeure"). Events of Force Majeure shall include without limitation: accidents, strikes or labor disputes, acts of any government or government agency, acts of nature, delays or failures in delivery from carriers or suppliers, shortages of materials, or any other cause beyond Seller's reasonable control.

16. Waiver and Severability. Failure to enforce any provision of these Terms will not invalidate that provision; nor will any such failure prejudice Seller's right to enforce that provision in the future. Invalidation of any provision of these Terms by legislation or other rule of law shall not invalidate any other provision herein and, the remaining provisions will remain in full force and effect.

17. Termination. Seller may terminate any agreement governed by or arising from these Terms for any reason and at any time by giving Buyer thirty (30) days prior written notice. Seller may immediately terminate, in writing, if Buyer: (a) breaches any provision of these Terms (b) appoints a trustee, receiver or custodian for all or any part of Buyer's property (c) files a petition for relief in bankruptcy on its own behalf, or one if filed by a third party (d) makes an assignment for the benefit of creditors; or (e) dissolves its business or liquidates all or a majority of its assets.

18. Ownership of Software. Seller retains ownership of all Software supplied to Buyer hereunder. In no event shall Buyer obtain any greater right in and to the Software than a right in the nature of a license limited to the use thereof and subject to compliance with any other terms provided with the Software.

19. Indemnity for Infringement of Intellectual Property Rights. Seller is not liable for infringement of any patents, trademarks, copyrights, trade dress, trade secrets or similar rights ("Intellectual Property Rights") except as provided in this Section. Seller will defend at its expense and will pay the cost of any settlement or damages awarded in an action brought against Buyer based on a third party claim that one or more of the Products sold hereunder infringes the Intellectual Property Rights of a third party in the country of delivery of the Products by the Seller to the Buyer. Seller's obligation to defend and indemnify Buyer is contingent on Buyer notifying Seller within ten (10) days after Buyer becomes aware of any such claim, and Seller having sole control over the defense of the claim including all negotiations for settlement or compromise. If one or more Products sold hereunder is subject to such a claim, Seller may, at its sole expense and option, procure for Buyer the right to continue using the Products, replace or modify the Products so as to render them non-infringing, or offer to accept return of the Products and refund the purchase price less a reasonable allowance for depreciation. Seller has no obligation or liability for any claim of infringement: (i) arising from information provided by Buyer; or (ii) directed to any Products provided hereunder for which the designs are specified in whole or part by Buyer; or (iii) resulting from the modification, combination or use in a system of any Products provided hereunder. The foregoing provisions of this Section constitute Seller's sole and exclusive liability and Buyer's sole and exclusive remedy for such claims of infringement of Intellectual Property Rights.

20. Governing Law. These Terms and the sale and delivery of all Products are deemed to have taken place in, and shall be governed and construed in accordance with, the laws of the State of Ohio, as applicable to contracts executed and wholly performed therein and without regard to conflicts of laws principles. Buyer irrevocably agrees and consents to the exclusive jurisdiction and venue of the courts of Cuyahoga County, Ohio with respect to any dispute, controversy or claim arising out of or relating to the sale and delivery of the Products.

21. Entire Agreement. These Terms, along with the terms set forth in the main body of any Quote, forms the entire agreement between the Buyer and Seller and constitutes the final, complete and exclusive expression of the terms of sale. In the event of a conflict between any term set forth in the main body of a Quote and these Terms, the terms set forth in the main body of the Quote shall prevail. All prior or contemporaneous written or oral agreements or negotiations with respect to the subject matter shall have no effect. These Terms may not be modified unless in writing and signed by an authorized representative of Seller.

22. Compliance with Laws. Buyer agrees to comply with all applicable laws, regulations, and industry and professional standards, including those of the United States of America, and the country or countries in which Buyer may operate, including without limitation the U.S. Foreign Corrupt Practices Act ("FCPA"), the U.S. Anti-Kickback Act ("Anti-Kickback Act"), U.S. and E.U. export control and sanctions laws ("Export Laws"), the U.S. Food Drug and Cosmetic Act ("FDCA"), and the rules and regulations promulgated by the U.S. Food and Drug Administration ("FDA"), each as currently amended. Buyer agrees to indemnify, defend, and hold harmless Seller from the consequences of any violation of such laws, regulations and standards by Buyer, its employees or agents. Buyer acknowledges that it is familiar with all applicable provisions of the FCPA, the Anti-Kickback Act, Export Laws, the FDCA and the FDA and certifies that Buyer will adhere to the requirements thereof and not take any action that would make Seller violate such requirements. Buyer represents and agrees that Buyer will not make any payment or give anything of value, directly or indirectly, to any governmental official, foreign political party or official thereof, candidate for foreign political office, or commercial entity or person, for any improper purpose, including the purpose of influencing such person to purchase Products or otherwise benefit the business of Seller. Buyer further represents and agrees that it will not receive, use, service, transfer or ship any Product from Seller in a manner or for a purpose that violates Export Laws or would cause Seller to be in violation of Export Laws.

Tel: +45 63 12 83 00 | Email: ps@hymatik.com | www.hymatik.com | Hvidkaervej 27a, DK-5250 Odense SV, Denmark

Worldwide Filtration Manufacturing Locations

North America

Compressed Air Treatment

Filtration & Separation/Balston
Haverhill, MA
978 858 0505
www.parker.com/balston

Finite Airtek Filtration
Airtek/domnick hunter/Zander
Lancaster, NY
716 686 6400
www.parker.com/faf

Finite Airtek Filtration/Finite
Oxford, MI
248 628 6400
www.parker.com/finitefilter

Engine Filtration & Water Purification

Racor
Modesto, CA
209 521 7860
www.parker.com/racor

Holly Springs, MS
662 252 2656
www.parker.com/racor

Beaufort, SC
843 846 3200
www.parker.com/racor

Racor – Village Marine Tec.
Gardena, CA
310 516 9911
desalination.parker.com

Parker Sea Recovery
Carson, CA
310 637 3400
www.searecovery.com

Hydraulic Filtration

Hydraulic Filter
Metamora, OH
419 644 4311
www.parker.com/hydraulicfilter

Laval, QC Canada
450 629 9594
www.parkerfarr.com

Process Filtration

domnick hunter Process Filtration
Oxnard, CA
805 604 3400
www.parker.com/processfiltration

Madison, WI
608 824 0500
www.scilog.com

Phoenixville, PA
610 933 1600
www.parker.com/processfiltration

Aerospace Filtration

Velcon Filtration
Colorado Springs, CO
719 531 5855
www.velcon.com

Europe

Compressed Air Treatment

domnick hunter Filtration & Separation
Gateshead, England
+44 (0) 191 402 9000
www.parker.com/dhfns

Parker Gas Separations
Etten-Leur, Netherlands
+31 76 508 5300
www.parker.com/dhfns

Hiross Zander
Padova Business Unit
Padova, Italy
+39 049 9712 111
www.parker.com/hzd

Hiross Zander
Essen Business Unit
Essen, Germany
+49 2054 9340
www.parker.com/hzd

Engine Filtration & Water Purification

Racor
Dewsbury, England
+44 (0) 1924 487 000
www.parker.com/rfde

Racor Research & Development
Stuttgart, Germany
+49 (0)711 7071 290-10
www.parker.com/rfde

Hydraulic Filtration

Hydraulic Filter
Arnhem, Holland
+31 26 3760376
www.parker.com/hfde

Urjala Operation
Urjala, Finland
+358 20 753 2500
www.parker.com/hfde

Condition Monitoring Centre
Norfolk, England
+44 (0) 1842 763 299
www.parker.com/hfde

Parker Kittiwake
West Sussex, England
+44 (0) 1903 731 470
www.kittiwake.com

Parker Procal
Peterborough, England
+44 (0) 1733 232 495
www.kittiwake.com

Process Filtration

domnick hunter Process Filtration
Birtley, England
+44 (0) 191 410 5121
www.parker.com/processfiltration

Parker Twin Filter BV
Zaandam, Netherlands
+31(0)75 655 50 00
www.twinfilter.com

Asia Pacific

Australia
Castle Hill, Australia
+61 2 9634 7777
www.parker.com/australia

China
Shanghai, China
+86 21 5031 2525
www.parker.com/china

India
Navi Mumbai, India
+91 22 651 370 8185
www.parker.com/india

Parker Fowler
Bangalore, India
+91 80 2783 6794
www.johnfowlerindia.com

Japan
Tokyo, Japan
+81 45 870 1522
www.parker.com/japan

Parker Techno
Osaka, Japan
+81 66 340 1600
www.techno.taiyo-ltd.co.jp

Korea
Hwaseon-City
+82 31 359 0852
www.parker.com/korea

Singapore
Jurong Town, Singapore
+65 6887 6300
www.parker.com/singapore

Thailand
Bangkok, Thailand
+66 2186 7000
www.parker.com/thailand

Latin America

Parker Comercio Ltda.
Filtration Division
Sao Paulo, Brazil
+55 12 4009 3500
www.parker.com/br

Pan American Division
Miami, FL
305 470 8800
www.parker.com/panam

Africa

Aeroport Kempton Park, South Africa
+27 11 9610700
www.parker.com/africa

© 2014 Parker Hannifin Corporation. Product names are trademarks or registered trademarks of their respective companies.

Catalog 2300-ConMon-2b 03/30/2020 (pdf)

Parker Hannifin Corporation
Filtration Group Global Headquarters
6035 Parkland Boulevard
Cleveland, OH 44124-4141
phone 216 896 3000
www.parker.com